Ford Road Landfill
Certification of Completion of the Remedial Action Report

Prepared for

The Ford Road Settling Parties

April 30, 2013

THIS PAGE INTENTIONALLY LEFT BLANK.

Ford Road Landfill
Certification of Completion of the Remedial Action Report

Prepared for
The Ford Road Settling Parties

April 30, 2013

THIS PAGE INTENTIONALLY LEFT BLANK.

Table of Contents

List of Figures iix
Engineer's Certification x
Section 1 1-1
Introduction 1-1
1.1 Regulatory Involvement 1-2
1.2 Organization of the Certification Report 1-3
Section 2 2-1
Phase I Construction 2-1
2.1 Phase I Alterations/Modifications 2-2
2.2 Quality Control (QC) Information/Testing 2-3
2.3 Contractor Mobilization 2-3
2.4 Site Preparation 2-4
2.4.1 Erosion and Sediment Control 2-4
2.4.1.1 Materials and Equipment 2-5
2.4.1.2 Construction/Installation Methods 2-5
2.4.1.3 CQA Monitoring 2-5
2.4.2 Temporary Construction Entrance 2-6
2.4.2.1 Materials and Equipment 2-6
2.4.2.2 Construction/Installation Methods 2-6
2.4.2.3 CQA Monitoring 2-7
2.4.3 Site Clearing and Grubbing 2-7
2.4.3.1 Equipment 2-7
2.4.3.2 Construction/Installation Methods 2-7
2.4.3.3 CQA Monitoring 2-8
2.4.4 Upper Surface Soil Placement Area 2-8
2.4.4.1 Materials and Equipment 2-8
2.4.4.2 Construction/Installation Methods 2-8
2.4.4.3 CQA Monitoring 2-9
2.4.5 Groundwater Monitoring Well Abandonment 2-9
2.4.5.1 Materials and Equipment 2-9
2.4.5.2 Abandonment Procedures 2-10
2.4.5.3 CQA Monitoring 2-10
2.5 South Access Road 2-10

2.5.1 Materials and Equipment 2-11
2.5.2 Construction/Installation Methods 2-11
2.5.3 CQA Monitoring 2-11
2.6 Sedimentation Basin 2-12
2.6.1 Materials and Equipment 2-12
2.6.2 Construction/Installation Methods 2-13
2.6.3 CQA Monitoring 2-14
2.7 Lower Area Dewatering Pad 2-15
2.7.1 Materials and Equipment 2-15
2.7.2 Construction/Installation Methods 2-15
2.7.3 CQA Monitoring 2-16
2.8 North Soil Removal Area 2-17
2.8.1 Slurry Wall 2-18
2.8.1.1 Equipment and Materials 2-18
2.8.1.2 Construction/Installation Methods 2-18
2.8.1.3 CQA Monitoring 2-19
2.8.2 Soil Excavation 2-20
2.8.2.1 Materials and Equipment 2-21
2.8.2.2 Construction/Installation Methods 2-21
2.8.2.3 CQA Monitoring 2-23
2.8.3 North Soil Removal Area Restoration 2-23
2.8.3.1 Materials and Equipment 2-23
2.8.3.2 Construction/Installation Methods 2-23
2.8.3.3 CQA Monitoring 2-24
2.8.3.4 Quality Assurance (QA) Testing 2-24
2.9 South Soil Removal Area 2-25
2.9.1 Soil Excavation 2-25
2.9.1.1 Equipment 2-26
2.9.1.2 Construction/Installation Methods 2-26
2.9.1.3 CQA Monitoring 2-27
2.9.2 South Soil Removal Area Restoration 2-27
2.9.2.1 Equipment and Materials 2-28
2.9.2.2 Construction/Installation Methods 2-28
2.9.2.3 CQA Monitoring 2-28
2.9.2.4 Quality Assurance (QA) Testing 2-29
2.10 Site Restoration and Closure 2-29
2.10.1 Materials and Equipment 2-29

2.10.2 Construction/Installation Methods 2-31
2.10.3 CQA Monitoring 2-34
Section 3 3-1
Phase II Construction 3-1
3.1 Phase II Alterations/Modifications 3-1
3.2 Quality Control (QC) Information/Testing 3-2
3.2.1 Off-Site Borrow Soil Testing 3-3
3.2.1.1 Metro Parks Service Soil Stockpile 3-4
3.2.1.2 Camp Wahoo Borrow Source 3-4
3.2.1.3 Grobe Fruit Farm Borrow Source 3-5
3.2.1.4 Off-Site Soil and Topsoil Volumes 3-6
3.3 Contractor Mobilization 3-6
3.4 Site Preparation 3-7
3.4.1 Erosion and Sediment Control 3-7
3.4.1.1 Materials and Equipment 3-7
3.4.1.2 Construction/Installation Methods 3-8
3.4.1.3 CQA Monitoring 3-8
3.4.2 Temporary Construction Entrances 3-8
3.4.2.1 Materials and Equipment 3-9
3.4.2.2 Construction/Installation Methods 3-9
3.4.2.3 CQA Monitoring 3-9
3.4.3 Site Clearing and Grubbing 3-9
3.4.3.1 Equipment 3-10
3.4.3.2 Construction/Installation Methods 3-10
3.4.3.3 CQA Monitoring 3-10
3.5 South Access Road 3-11
3.5.1 Materials and Equipment 3-11
3.5.2 Construction/Installation Methods 3-11
3.5.3 CQA Monitoring 3-12
3.6 North Access Road 3-12
3.6.1 Materials and Equipment 3-12
3.6.2 Construction/Installation Methods 3-13
3.6.3 CQA Monitoring 3-13
3.7 Sedimentation Basin 3-14
3.7.1 Materials and Equipment 3-14
3.7.2 Construction/Installation Methods 3-15
3.7.3 CQA Monitoring 3-16

3.7.4 Quality Assurance (QA) Testing 3-17
3.8 Steep Slope Area Soil Buttress 3-18
3.8.1 Materials and Equipment 3-18
3.8.2 Construction/Installation Methods 3-20
3.8.2.1 Seep Drains Installation 3-20
3.8.2.2 Placement of Off-Site Soils 3-21
3.8.2.3 Placement of Off-Site Topsoil 3-22
3.8.2.4 Riprap Extension 3-23
3.8.2.5 Surface Water Diversion Channels 3-23
3.8.2.6 Drivable Drainage Channel 3-23
3.8.2.7 Downchute Channel 3-24
3.8.3 CQA Monitoring 3-24
3.8.3.1 Seep Drains 3-25
3.8.3.2 Soil Placement 3-25
3.8.3.3 Topsoil Placement 3-25
3.8.3.4 Riprap Extension 3-25
3.8.3.5 Surface Water Diversion Channels 3-26
3.8.3.6 Drivable Drainage Channel 3-26
3.8.3.7 Downchute Channel 3-26
3.8.4 Quality Assurance (QA) Testing 3-27
3.9 Upper Surface Area Final Cover System Cap 3-27
3.9.1 Materials and Equipment 3-27
3.9.2 Construction/Installation Methods 3-28
3.9.2.1 Phase I Onsite Soil Placement Area 3-28
3.9.2.2 IDW Soil Drums 3-28
3.9.2.3 Topsoil Stripping 3-29
3.9.2.4 Subgrade Construction 3-29
3.9.2.5 Cap Construction 3-29
3.9.2.6 Onsite Topsoil Replacement 3-30
3.9.2.7 Off-Site Topsoil Placement 3-30
3.9.3 CQA Monitoring 3-31
3.9.3.1 Phase I Onsite Soil Placement Area Placement 3-31
3.9.3.2 IDW Soil Drums 3-31
3.9.3.3 Topsoil Stripping 3-31
3.9.3.4 Subgrade Construction 3-31
3.9.3.5 Cap Construction 3-32
3.9.3.6 Onsite Topsoil Replacement 3-32

3.9.3.7 Off-Site Topsoil Placement 3-32
3.9.4 Quality Assurance (QA) Testing 3-33
3.10 Ford Road Culvert Outlet Channel 3-33
3.10.1 Materials and Equipment 3-34
3.10.2 Construction/Installation Methods 3-34
3.10.3 CQA Monitoring 3-34
3.11 Site Restoration and Closure 3-35
3.11.1 Materials and Equipment 3-36
3.11.2 Construction/Installation Methods 3-37
3.11.2.1 Groundwater Monitoring Well Installation/Development 3-37
3.11.2.2 TRM Installation 3-38
3.11.2.3 Upper Surface Area Vegetation 3-39
3.11.2.4 Steep Slope Area Vegetation 3-39
3.11.2.5 Demobilization 3-39
3.11.2.6 Willow Stake Planting 3-39
3.11.2.7 Ford Road Repairs 3-40
3.11.2.8 Fence and Gates Installation 3-40
3.11.3 CQA Monitoring 3-40
3.11.3.1 Groundwater Monitoring Well Installation/Development 3-40
3.11.3.2 TRM Installation 3-41
3.11.3.3 Upper Surface Area Vegetation 3-41
3.11.3.4 Steep Slope Area Vegetation 3-41
3.11.3.5 Demobilization 3-41
3.11.3.6 Willow Stake Planting 3-42
3.11.3.7 Ford Road Repairs 3-42
3.11.3.8 Fence and Gates Installation 3-42
Section 4 4-1
Final Site Inspection 4-1
4.1 Erosion Issues 4-1
4.2 Preliminary Close-Out Report 4-2
Section 5 5-1
Operation and Maintenance Plan Implementation 5-1
5.1 Interim Operations and Maintenance Activities 5-1
Figures 1
Appendix A: Daily Field Logs and Weekly Progress Meeting Summaries ..... A
Appendix B: Construction Photographs ..... B

Appendix C: Resumes: Certifying Engineer and Monitors C
Appendix D: Project Record Drawings ..... D
Appendix E: Contractor Submittal Reviews ..... E
Appendix F: Soil Erosion and Sedimentation Control Inspection Forms ..... F
Appendix G: Moisture/Density Test Results ..... G
Appendix H: Laboratory Analytical Results ..... H
Appendix I: Slurry Wall Test Results I
Appendix J: Air Monitoring and Soil Screening Results ..... J
Appendix K: Groundwater Monitoring Wells ..... K
Monitoring Well Abandonment Reports ..... K
Monitoring Well Installations and Development Letter ..... K
Appendix L: Vegetation – Seed Tags, Fertilizer, Mulch Information ..... K
Appendix M: Offsite Borrow Sources Analytical Results L
Appendix N: Interim O & M Inspection Reports ..... M

List of Figures

Figure 1. North Soil Removal Area Excavated Soil Flow Chart
Figure 2. South Soil Removal Area Excavated Soil Flow Chart

Engineer's Certification

"I, Richard A. Isaac, being a Registered Professional Engineer in the State of Ohio, PE No. 57074, have personally visited and examined the Ford Road Site throughout the performance of the Phase I and Phase II Remedial Action implementation, I am familiar with the information submitted in this document, and based on my inquiry of the person or persons directly responsible for preparing this Certification of Completion of the Remedial Action Report, I make the following statement:

To the best of my knowledge, after thorough investigation, I certify that the information contained in or accompanying this submission is true, accurate and complete. I am aware there are significant penalties for submitting false information including the possibility of fine and imprisonment for knowing violations."

_____ _____

Signature **Date**

Richard A. Isaac, P.E.

Name

On this, the _____ day of _____ 2013, before me, a notary public, the above signed person, known to me to be the person whose name is subscribed to the within instrument and acknowledged that he executed the same for purposes therein contained.

In witness whereof, I hereunto set my hand and official seal.

_____

Notary Public

THIS PAGE INTENTIONALLY LEFT BLANK.

Section 1

Introduction

This Certification of Completion of the Remedial Action Report (Certification Report) for the Ford Road Landfill (the Site) was prepared as required by Section XIV. Certification of Completion, Paragraph 53a of the Ford Road Landfill Remedial Design/Remedial Action (RD/RA) Consent Decree entered on February 18, 2009 (the CD) and in accordance with the Construction Quality Assurance Plan (CQAP) approved as part of the Remedial Action Work Plan (RAWP) approved on August 12, 2011 by the United States Environmental Protection Agency (U.S. EPA), Region 5. The purpose of the Certification Report is to document and verify that construction of the Phase I and Phase II Remedial Actions were performed in accordance with the approved remedial designs, or approved modifications, and with the following provisions of Paragraph 53a of the Consent Decree (CD):

- Synopsis of the work defined in the Statement of Work (SOW) and a demonstration in accordance with the Performance Standards Verification Plan and Performance Standards have been achieved;
- Certification that the Remedial Action has been completed in full satisfaction of the requirements of the CD; and
- A description of how the Setting Parties will implement the U.S. EPA approved Operation and Maintenance Plan.

As outlined in the approved CQAP, the Certification Report provides detailed discussions and information that describes the methodologies used to meet the design objectives and performance standards identified for implementation of the Remedial Action and to assess compliance with the CQAP. The Certification Report includes discussions related to the following items:

- Documentation that the project is consistent with the approved Remedial Design Work Plan (RDWP) and that the Remedial Action implementation was adequately performed in accordance with the approved RAWP;
- Explanation of any alterations/modifications to the approved RDWP and/or RAWP and why these were necessary for the project;
- Summary of the Remedial Action implementation activities;
- Results of monitoring performed to document Remedial Action implementation or design/performance standards; and
- Certification that the Remedial Action has been completed as specified in the SOW and the CD.
- Project Record Drawings documenting the “as-built” Phase I and Phase II Remedial Action implementation.

To address the previously listed items, the Certification Report includes discussions and provides information and data verifying the Phase I and Phase II Remedial Action implementation to be in conformance with the approved design including approved alterations/modifications. Brown and Caldwell performed resident construction quality assurance (CQA) services as a means to verify conformance of the Phase I and Phase II Remedial Action implementation with the approved design including approved alterations/modifications. The Certification Report format addresses the design conformance verification by providing the following discussion for each component of the Phase I and Phase II Remedial Action implementation:

- The construction/implementation activities performed including methods and procedures and equipment used;
- Material and construction quality assurance/quality control (QA/QC) protocols including both field and laboratory QA/QC testing, as appropriate;
- Field oversight and monitoring activities including documentation of observations and field tests and health and safety protocols; and
- Project Record Drawings prepared from field survey information and data to graphically depict alterations/modifications from the approved design.

QA/QC testing results are discussed in the Certification Report narrative and are summarized in tables included in the appropriate appendices. Alterations/modifications and other changes from the approved RDWP and/or RAWP are noted and discussed in Sections 2.1 for the Phase I Remedial Action implementation and 3.1 for the Phase II Remedial Action implementation of the Certification Report. A certification statement by the certifying Professional Engineer is included as Page viii.

For the purposes of this Certification Report, the term, construction quality assurance (CQA) is used to refer to activities performed by Brown and Caldwell, where quality control (QC) refers to observation and testing activities performed by Op Tech and/or Haynes.

The Phase I fieldwork was performed from August 29, 2011 to May 10, 2012 by Op Tech Environmental Services, Inc. (Op Tech) of East Syracuse, New York under the direction of David Curran (Site Supervisor). The Phase II fieldwork was performed from May 29, 2012 to January 15, 2013 by Mark Haynes Construction, Inc. (Haynes) of Norwalk, Ohio under the direction of Dave Miller (Site Supervisor). Brown and Caldwell performed CQA services with Bill Foster, E.I., S.I., Nate Givens, E.I., Julie McGowan, Amy E. Minner, and Richard A. Isaac, P.E. who provided day-to-day observations and documentation of the Remedial Action implementation. Daily field logs and Weekly Progress Meeting summaries are provided in Appendix A. Construction/ installation photographs are included in Appendix B. Elena R. Goodhall, P.E. of Brown and Caldwell provided project management for the Phase I Remedial Action implementation, Richard A. Isaac, P.E. of Brown and Caldwell served as the project manager for the Phase II Remedial Action implementation and certifying engineer. Qualifications for Mr. Isaac, Ms. Goodhall, Mr. Foster, Mr. Givens, Ms. McGowan and Ms. Minner are included in Appendix C. Project Record Drawings that graphically present the construction/implementation of the Phase I and Phase II Remedial Action implementation are included in Appendix D.

1.1 Regulatory Involvement

Throughout the performance of the Remedial Action implementation, representatives of the following regulatory agencies/entities took an active role in attending project meetings, providing oversight where required, and were involved in discussions, reviews, and approvals of field driven alterations/modifications to the approved design:

- U.S. EPA, Region 5:

  Demaree Collier; Remedial Project Manager
- United States Army Corps of Engineers (USACE), Buffalo District:

  William (Bill) T. Frederick, P.G.; U.S. EPA Oversight Contractor
- Ohio Environmental Protection Agency (Ohio EPA), Northeast District Office (NEDO):

  Vanessa Steigerwald-Dick, Ph.D; Ohio EPA Oversight

  Clarrisa Gereby; Ohio EPA Oversight
- Lorain County Parks Department:

Brian Holmes; Park Manager

The agency representatives and the Lorain County Parks Department participated in the Pre-Construction Meetings for both the Phase I and Phase II Remedial Action implementation. Weekly Project Meetings (Meetings) were held at the Site with participation by either attendance at the Site or by conference call-in. The Meetings provided real-time information related to the project status, schedule, and issues that needed to be addressed. Site walkthroughs were conducted following the Meetings that provided a first-hand look at how the Remedial Action implementation was progressing. After each meeting, Brown and Caldwell prepared and distributed a meeting summary which summarized significant discussions, agreements, and future activities.

Oversight by the USACE for specific activities i.e. the North and South Soil Removal Area excavation, material screening, and determination of where the excavated soil was placed; installation of the North and South Seep Drains; etc. was coordinated and scheduled. Site visits by the USACE and the Ohio EPA were scheduled and observations/oversight was performed.

Several field driven alterations/modifications to the approved design occurred and were addressed during the Remedial Action implementation. The regulatory agencies were actively involved in discussing, evaluating, and providing approval when alterations/modifications arose in the field. The field alterations/modifications are discussed in the appropriate sections of the Certification Report including who was involved in the discussions and approvals.

1.2 Organization of the Certification Report

This Certification Report is organized to satisfy the requirements provided in the approved RDWP and RAWP for documentation and verification of the performance of Phase I and Phase II Remedial Action implementation. The following sections and major subsections are provided in the Certification Report:

Section 1: Introduction provides an overview and the objectives of the Certification Report and includes the following major subsections:

- 1.1 Regulatory Involvement.
- 1.2 Organization of the Certification Report.

Section 2: Phase I Construction provides detailed discussions of how the Phase I Remedial Action was implemented and verified to be in conformance with the approved design including approved alterations/modifications and includes the following major subsections:

- 2.1 Phase I Alterations/Modifications.
- 2.2 Quality Control (QC) Information/Testing.
- 2.3 Contractor Mobilization.
- 2.4 Site Preparation.
- 2.5 South Access Road.
- 2.6 Sedimentation Basin.
- 2.7 Lower Dewatering Pad.
- 2.8 North Soil Removal Area.
- 2.9 South Soil Removal Area.
- 2.10 Site Restoration and Closure.

Section 3: Phase II Construction provides detailed discussions of how the Phase II Remedial Action was implemented and verified to be in conformance with the approved design including approved alterations/modifications and includes the following major subsections:

- 3.1 Phase I Alterations/Modifications.
- 3.2 Quality Control (QC) Information/Testing.
- 3.3 Contractor Mobilization.
- 3.4 Site Preparation.
- 3.5 South Access Road.
- 3.6 North Access Road
- 3.7 Sedimentation Basin.
- 3.8 Steep Slope Area Soil Buttress.
- 3.9 Upper Surface Area Final Cover System Cap.
- 3.10 Ford Road Culvert Outlet Channel.
- 3.11 Site Restoration and Closure.

Section 4: Final Site Inspection provides a discussion of the final site inspection performed by the U.S. EPA following completion of Phase II Remedial Action fieldwork on October 26, 2012 and includes the following major subsections:

- 4.1 Erosion Issues.
- 4.2 Preliminary Close-Out Report.

Section 5: Operation and Maintenance Plan Implementation provides a summary of the Operation and Maintenance (O&M) responsibilities following approval of the Certification Report by the U.S. EPA includes the following major subsections:

- 5.1 Interim Operations and Maintenance Activities.

.

Section 2

Phase I Construction

As specified in the approved Remedial Action Work Plan, the Ford Road Remedial Action was scheduled to be conducted in two phases; Phase I scheduled for the 2011 construction season and Phase II scheduled for the 2012 construction season. The Phase I Remedial Action implementation was to include construction of access roads, a sedimentation basin, soil removal activities in the flood plain of the Black River from two areas identified during the site investigation phases of the project, and construction of the base of the buttress system up to the approximate elevation of 612 feet mean sea level (msl). The soil buttress construction was to be completed to an elevation above the 100-year flood plain at the end of Phase I construction which would allow some elements of the Phase II construction to begin relatively early in the spring of 2012.

Due to record rainfall amounts and frequency of storm events that occurred throughout the Phase I Remedial Action implementation, difficulties were encountered in performing the work. The record rainfall and the issues/difficulties the storm events were having on the performance of the Phase I Remedial Action implementation work was discussed with U.S. EPA and the ACOE. Based on these discussions, a decision was made to delay completion of construction of the permanent Sedimentation Basin berm and the Steep Slope Area Soil Buttress (Soil Buttress) from the river plain of the Black River up to elevation 612 feet msl. The construction of the Sedimentation Basin berm and the Soil Buttress were performed as part of the Phase II Remedial Action work discussed as part of the Phase II Construction in Section 3 of the Certification Report.

The Phase I construction was performed, and substantially completed, during the period August 29, 2011 to December 17, 2011. From May 7, 2012 to May 10, 2012, Op-Tech remobilized to the Site to correct the angle of the riprap face along the Black River bank at the former North Soil Removal Area. The Phase I Remedial Action implementation included the performance of the following activities:

- Quality Control (QC) Information/Testing for proposed materials.
- Contractor Mobilization.
- Site Preparation.
- South Access Road.
- Partial Sedimentation Basin Berm Construction.
- Lower Area Dewatering Pad.
- North Soil Removal Area.
- South Soil Removal Area.
- Site Restoration and Closure.

A discussion of the materials and equipment, construction/installation methods, CQA monitoring, and tests performed for each of the Phase I Remedial Action implementation activities is presented in the following sections of the Certification Report. The narrative includes discussion related to the construction issues/difficulties encountered due to the record rainfall for each of the Phase I construction activities, as appropriate. Alterations/modifications from the approved Phase I construction drawings were implemented in the field and are discussed including agreements and approvals obtained from the U.S. EPA.

2.1 Phase I Alterations/Modifications

During the course of the Phase I Remedial Action implementation activities, alterations/modifications from the construction drawings were implemented in the field. The alterations/modifications were discussed with the U.S. EPA to obtain agreement/approval before implementing the alterations/modifications in the field. These alterations/modifications are listed below, and are reflected on the Project Record Drawings included in Appendix D:

- Due to the frequency and intensity of storm events (rainfall) that occurred throughout the performance of the Phase I Remedial Action implementation, the project schedule was extended from the original anticipated construction completion date of October 31, 2011 to December 17, 2011. The frequent rain events caused numerous instances of river flooding that made the Site conditions unworkable and caused construction related issues such as the following:
    - Work shutdowns due to limited or no access to the work area(s).
    - Difficult and unsafe working conditions i.e. wet soil material caused personnel and equipment to slip/slide.
    - Continuous creation of large ruts in areas being backfilled and soil placement areas causing continual re-working of soil material.
    - The failure to achieve soil compaction requirements due to soil saturation related to the river flooding.

  Construction of the sedimentation basin was initiated as part of the Phase I Remedial Action, but difficulties were encountered due to weather (primarily the frequency and amount of rainfall) and the time of year (mid-December 2011). This issue was discussed with U.S. EPA and the ACOE and the decision was made to delay completion of construction of the permanent Sedimentation Basin berm and the Steep Slope Area Soil Buttress (Soil Buttress) from the river plain of the Black River up to elevation 612 feet msl. The construction of the Sedimentation Basin berm and the Soil Buttress were performed as part of the Phase II Remedial Action work.
- Due to the unworkable soil conditions and the inability to obtain the required compaction, a temporary construction road was constructed at the toe of the Steep Slope Area in lieu of the South Access Road across the Sedimentation Basin berm. The temporary construction road, with exception for a portion to the south of the North Soil Removal Area, was located above the river floodplain and not susceptible to the affects of flooding. This road provided better access through the work areas to the North and South Soil Removal Areas.
- As requested by U.S. EPA, the Army Corps of Engineers, and Ohio EPA, the Phase I Remedial Action was modified to include the planting of willow stakes along the top of the riprap wall constructed along the restored riverbank at the former North Soil Removal Area.
- Vegetation of the disturbed areas was performed using a temporary seed mix conducive to the climate conditions (cold temperatures and potential freezing) at the time the work was shutdown for the winter. Use of the temporary seed mix in lieu of the Steep Slope Seed Mix and permanent seeding was discussed between the U.S. EPA, Ohio EPA, the Settling Parties Site Coordinator, and Brown and Caldwell. The decision was made to use the temporary seed mix in an attempt to establish vegetation of the disturbed areas in as fast a manner as possible. The ryegrass and perennial ryegrass are considered quick germinating grasses, which are often used to establish vegetation outside of the optimum seeding periods.
- Based on observations made during visits to the Site through the winter 2011 and early spring 2012, it was determined that the as constructed slope (angle) of the riprap wall constructed along the Black River, as part of the former North Soil Removal Area restoration, did not meet

design specifications. Field surveying confirmed that the constructed slope of the riprap wall was flatter than the required slope. Op-Tech mobilized to the Site in May 2012 and placed additional riprap to correct the outside slope of the riprap wall to the required 2:1 (H:V) slope. Correction of the riprap slope (angle) was necessary to establish the base and slope of the Soil Buttress constructed at the northeast corner of the Site during the Phase II Remedial Action. The placement of additional riprap was observed and documented by Brown and Caldwell.

2.2 Quality Control (QC) Information/Testing

Quality Control (QC) information and testing was performed to confirm that the materials proposed for use in the construction/installation are in conformance with the specifications and the CQAP. Op-Tech provided the required QC information and/or laboratory test results for the proposed materials to Brown and Caldwell for review in the form of submittals. Brown and Caldwell reviewed the submittal information to check conformance of the proposed materials with the specifications and the CQAP. The submittals were returned to Op-Tech with one of the following four items indicated:

- No Exception Taken;
- Make Corrections Noted (Re-submittal Not Required);
- Revise and Re-Submit (Re-submittal Required); or
- Rejected – See Remarks

Once the proposed materials were determined to be in conformance with the specifications and the CQAP, Op-Tech could obtain and have materials delivered to the Site.

The following QC information and testing was performed by Op-Tech for materials used in the Phase I Remedial Action Implementation"

- Information submittals:
    - Silt fence;
    - Non-woven geotextile fabric;
    - 30-mil HDPE geomembrane; and
    - Permanent seed mix.
- Information and laboratory test results submittals:
    - Slurry wall material (Slurry Wall Work Plan);
    - ODOT 57 Recycled Aggregate;
    - ODOT 304 Recycled Concrete Aggregate;
    - ODOT 411 Recycled Aggregate;
    - Steep Slope Area structural fill soil; and
    - Low permeability soil.

Brown and Caldwell reviewed each of the submittals previously listed and determined the materials to be in conformance with the specifications and the CQAP. The U.S. EPA approved the use of recycled materials. The results of the submittal reviews are provided in Appendix E.

2.3 Contractor Mobilization

Op-Tech mobilized to the Site on August 29, 2011 to start setting up operations to perform the Phase I Remedial Action implementation. Equipment was mobilized and demobilized to and from the Site throughout the performance of the Phase I Remedial Action implementation activities. The following

provides a list of resources and equipment mobilized to the Site to begin the Phase I Remedial Action implementation activities:

- Portable office trailer.
- Tool trailer with various equipment, hand tools, and supplies.
- Caterpillar XQ20 Rental portable electric power generator.
- 1,000-gallon diesel fuel tank with secondary containment and dispenser.
- Various, 4-wheel drive, crew cab, pickup trucks.
- Portable sanitary toilet.
- Hand wash station.
- Roll-off dumpster.
- Personnel.
    - Site supervisor.
    - Equipment operators.
    - Laborers.

The portable sanitary toilet and hand wash station were serviced weekly and the roll-off dumpster was removed and replaced on an as-needed basis. The roll-off dumpster provided by Cooper Disposal, LLC of Avon, Ohio was used only for trash produced by the jobsite personnel. Only non-hazardous solid wastes were placed in the dumpsters. The dumpsters were taken to the Rumpke Transfer Station in Broadview Heights, Ohio with the waste transported to the Noble Road Landfill in Shiloh, Ohio (an Ohio EPA permitted solid waste facility) for off-site disposal.

TTL Associates, Inc. (TTL) of Cleveland, Ohio mobilized to the Site on September 6, 2011 to abandon the seven designated groundwater monitoring wells and demobilized on September 7, 2011. A discussion of the groundwater monitoring well abandonment procedures is provided in Section 2.4.5 of the Certification Report.

2.4 Site Preparation

Site preparation activities included the following:

- Erosion and Sediment Control.
- Temporary Construction Entrance.
- Site Clearing and Grubbing.
- Upper Surface Soil Placement Area.
- Groundwater Monitoring Well Abandonment.

2.4.1 Erosion and Sediment Control

Erosion and sediment control for the Site included silt fence and straw bales installed at the limits of disturbance and along the Black River floodplain. Op-Tech maintained erosion and sediment controls throughout the Phase I Remedial Action implementation.

Brown and Caldwell prepared a Storm Water Pollution Prevention Plan (SWP3) for the Site under the requirements of Ohio EPA Permit No. OHC000003 – Authorization for Storm Water Discharges Associated with Construction Activity under the National Pollutant Discharge Elimination System (NPDES) submitted as Appendix D of the RAWP. The erosion and sediment control structures were provided and installed following the provisions of the Ohio Department of Natural Resources (ODNR), Division of Soil and Water Conservation, *Rainwater and Land Development – Ohio's Standards for Stormwater Manage-*

ment, Land Development, and Urban Stream Protection, Third Edition 2006. An erosion and sediment inspection was performed at least weekly and following storm events.

Brown and Caldwell's CQA monitor(s) performed field oversight to document the materials, equipment, construction/installation methods, and CQA monitoring for the erosion and sediment control structures installation. The following sections of the Certification Report provide a summary of the written documentation for the materials and equipment (Section 2.3.1.1), construction/installation methods (Section 2.3.1.2), and CQA monitoring (Section 2.3.1.3) performed during installation of the erosion and sediment control structures. Photographic documentation is provided in Appendix B. Information, data, and test results for the QC requirements for materials and installation methods is provided in appendices as referenced.

2.4.1.1 Materials and Equipment

The erosion/sediment control materials installed at the Site included the following:

- Silt fence - LS 125 Fabric, 36" x 100' rolls; 1-1/2" x 1-1/2" x 48" (nominal) oak stakes on 10' centers.

Product information for the material is provided in Appendix E.

Equipment used for installing the silt fence included the following:

- Caterpillar (Cat) 307B excavator.
- Cat 228 skid steer loader.
- Various hand tools.

2.4.1.2 Construction/Installation Methods

Morton's Landscape Development Company (Morton's), of Columbia Station, Ohio performed installation of the silt fence. The following methods were followed in installing the silt fence:

- Excavated a minimum six-inch deep anchor trench.
- Unrolled silt fence panels and placed the silt fence, with the posts on the downslope side of the fabric, in the trench, leaving at least 16 inches of silt fence material above the original ground surface.
- Pulled the stakes tight and pounded the stakes into the ground at the backside of the trench.
- Seams between silt fence panels were overlapped a minimum of six inches and the end posts of each panel were wrapped together before the stakes were pounded into the ground.
- Backfilled the trench with the excavated soil.

2.4.1.3 CQA Monitoring

Brown and Caldwell's CQA Monitor visually observed the construction/installation of the erosion and sediment control structures for workmanship and continuity. The construction/installation activities were documented in written format using field books and forms with photographs used to provide visual documentation. Daily Field Logs providing a summary of the erosion and sediment control structures installation are provided in Appendix A with the installation photographs and descriptive photograph log provided in Appendix B. The following items were observed and documented by the Brown and Caldwell's CQA monitor during installation of the erosion and sediment control structures:

- Proper location and anchor trench depth.
- Placement of the silt fence in the anchor trench.
- Proper height of silt fence above the original ground surface.
- No sagging of the silt fence fabric between stakes.

- Proper overlap between seams of silt fence panels.
- Proper backfilling of the anchor trench.

The Brown and Caldwell CQA Monitor performed the soil erosion and sedimentation control inspections weekly and within 24 hours of storm events. Copies of the soil erosion and sedimentation control inspection forms are provided in Appendix F.

2.4.2 Temporary Construction Entrance

The temporary construction entrance utilized an existing Site entrance at the south end of the Site, which was at a high point in Ford Road. The temporary construction entrance provided a smooth transition from the Ford Road pavement and aided in reducing the mud tracked off the Site. Op-Tech maintained the temporary construction entrance throughout the Phase I Remedial Action implementation.

Brown and Caldwell's CQA Monitor(s) performed field oversight to document the materials, equipment, construction/installation methods, and CQA monitoring for the temporary construction entrances. The following sections of the Certification Report provide a summary of the written documentation for the materials and equipment (Section 2.3.2.1), construction/installation methods (Section 2.3.2.2), and CQA monitoring (Section 2.3.2.3) performed during installation of the temporary construction entrance. Photographic documentation is provided in Appendix B. Information, data, and test results for the QC requirements for materials and installation methods is provided in appendices as noted within each section of the temporary construction entrances discussion.

2.4.2.1 Materials and Equipment

The materials used to construct and maintain the temporary construction entrance included the following:

- 2-inch to 4-inch recycled brick/aggregate.

The temporary construction entrance was located at a high point in Ford Road; therefore, a culvert was not required.

The temporary construction entrance was constructed using the following equipment:

- Cat D6 dozer.
- Cat 320D excavator.
- Cat 740 articulated end dump.
- Various hand tools.

2.4.2.2 Construction/Installation Methods

The following activities were performed for the installation/maintenance of the temporary construction entrance:

- The stone was delivered and stockpiled at the Site.
- Op-Tech loaded the stone into the Cat 740 articulated end dump with the Cat 320D excavator.
- The Cat 740 articulated end dump hauled the stone to the temporary construction entrance and dumped the stone.
- The stone was pushed in place and graded using the Cat D6 dozer.

Op-Tech kept a stockpile of the 2-inch to 4-inch stone onsite for use in maintaining the surface of the construction entrance throughout the Phase I Remedial Action implementation.

2.4.2.3 CQA Monitoring

Brown and Caldwell's CQA monitor visually observed the installation of the temporary construction entrance for workmanship and continuity. The installation activities were documented in written format using field books and forms with photographs used to provide visual documentation. Daily Field Logs providing a summary of the installation of the temporary construction entrance is provided in Appendix A with the installation photographs and descriptive photograph log provided in Appendix B. The following items were observed and documented by the Brown and Caldwell's CQA monitor during installation of the temporary construction entrance:

- Proper stone size.
- Proper length, width, and thickness of the construction entrance.
- Proper grading to promote surface water drainage.

The Brown and Caldwell's CQA monitor monitored the condition of the construction entrance and requested Op-Tech to periodically place and grade additional 2-inch to 4-inch stone for maintenance of the temporary construction entrance.

2.4.3 Site Clearing and Grubbing

Following installation of the erosion and sediment controls, Edwards Land Clearing & Tree Service (Edwards), of Amherst, Ohio performed site clearing and grubbing activities. Site clearing and grubbing included the removal of ground cover, brush, trees, the grinding of stumps, and the chipping and off-site disposal of the cleared materials. The materials were separated between Green Circle Growers of Oberlin, Ohio for use as boiler fuel and to Earth & Wood in North Canton, Ohio for recycling into mulch.

Brown and Caldwell's CQA Monitor(s) performed field oversight to document the materials, equipment, construction/installation methods, and CQA monitoring for the clearing and grubbing activities. The following sections of the Certification Report provide a summary of the written documentation for the equipment (Section 2.3.3.1), construction/installation methods (Section 2.3.3.2), and CQA monitoring (Section 2.3.3.3) performed for the clearing and grubbing activities. Photographic documentation is provided in Appendix B.

2.4.3.1 Equipment

Site clearing and grubbing was performed using the following equipment:

- Komatsu PC 160LC excavator with a grapple hook attachment.
- Husky Brute XL-245 chipper.
- Rayco C100 super crawler with a Fecon mower attachment.
- John Deere 748G skidder.
- Timbco 425EXL with a Quadco saw attachment.
- Komatsu PC 200LC excavator with a Sneller machine stump grinder attachment.
- Various hand tools.

2.4.3.2 Construction/Installation Methods

The following activities were performed for clearing and grubbing:

- Removed designated trees and shrubs and other forms of vegetation.
    - Tree trunks, branches, limbs, and underbrush were transported to and staged in the Upper Surface Area for chipping.
- Surface vegetation, sod, grass, weeds, etc., were not removed.

- Stump grubbing was performed by grinding the stumps to within 2-3 inches of the adjacent ground surface.
- Chipped tree trunks, branches, limbs, and underbrush.
- Removed chipped material from the Site.

2.4.3.3 CQA Monitoring

Brown and Caldwell's CQA monitor visually observed the site clearing and grubbing activities for workmanship and continuity. The site clearing and grubbing activities were documented in written format using field books and forms with photographs used to provide visual documentation. Daily Field Logs providing a summary of the site clearing and grubbing activities are provided in Appendix A with the photographs and descriptive photograph log provided in Appendix B. The following items were observed and documented by the Brown and Caldwell's CQA monitor for the site clearing and grubbing activities:

- Removal of trees designated for removal.
- Chipping of tree trunks, branches, limbs, and underbrush and off-site removal of the chipped material.
- Stump grinding to the appropriate height.
- Verified that surface vegetation i.e. sod, grass, weeds, etc., were not removed.

2.4.4 Upper Surface Soil Placement Area

An area located at the high point of the Upper Surface Area was constructed for placement of soil excavated from the North and South Soil Removal Areas. The soil was placed in the Upper Surface Soil Placement Area (Soil Placement Area) and covered with plastic. Samples of the stockpiled soil were collected and analyzed to determine if the soil would need to be removed from the Site and placed in an off-site disposal facility licensed to accept the soil (see Section 2.9 of the Certification Report).

Brown and Caldwell's CQA Monitor(s) performed field oversight to document the materials, equipment, construction/installation methods, CQA monitoring, and testing for the Soil Placement Area construction. The following sections of the Certification Report provide a summary of the written documentation for the equipment (Section 2.3.4.1), construction/installation methods (Section 2.3.4.2), and CQA monitoring performed for the Soil Placement Area construction. Photographic documentation is provided in Appendix B.

2.4.4.1 Materials and Equipment

The materials used to construct and maintain the Soil Placement Area included the following:

- 6-mil Fire Retardant 20x100 Poly Material.

The Soil Placement Area was constructed using the following equipment:

- Cat D6 dozer.
- Various hand tools.

2.4.4.2 Construction/Installation Methods

The following activities were performed for Soil Placement Area construction:

- The Cat D6 dozer pushed the vegetation from an initial 40-foot by 40-foot area.
    - The Soil Placement Area was expanded two additional times (60-feet by 60-feet and 40-feet by 27-feet) to accommodate the volume of soil material requiring placement.
- For each Soil Placement Area, two-foot by two-foot soil berms were constructed around the perimeter.

    - The berms were constructed all three sides for the expanded Soil Placement Areas.
- The plastic was laid on the prepared surface and wrapped over the berms to create a water tight berm.
- The soil was covered with plastic and the plastic was anchored with sand bags on the seams and around the edges.

2.4.4.3 CQA Monitoring

Brown and Caldwell's CQA monitor visually observed the Soil Placement Area construction for workmanship and continuity. Daily Field Logs providing a summary of the Soil Placement Area construction are provided in Appendix A with the photographs and descriptive photograph log provided in Appendix B. The following items were observed and documented by the Brown and Caldwell's CQA monitor for the Soil Placement Area construction:

- Removal of vegetation from the Soil Placement Areas.
- Placement and adequate overlap of the plastic panels.
- Placement of the soil on the plastic panels.
- Proper wrapping of the plastic over the berms.
- Covering of the soil and anchoring the plastic.

2.4.5 Groundwater Monitoring Well Abandonment

Seven of the ten groundwater monitoring wells (wells) present at the site were required to be abandoned to provide access for performance of the Phase I Remedial Action implementation activities. The seven wells included the following:

FR-MW-1	FR-MW-4
FR-MW-2	FR-MW-8
FR-MW-3	FR-MW-9
	FR-MW-10

The wells were abandoned following procedures in the approved Field Sampling Plan and generally as outlined in the State of Ohio *Technical Guidance for sealing Unused Wells* by the State Coordinating Committee on Groundwater.

Brown and Caldwell's Geologist performed field oversight to document the materials, equipment, and abandonment procedures for the designated seven wells. The following sections of the Certification Report provide a summary of the written documentation for the materials and equipment (Section 2.4.5.1), abandonment procedures (Section 2.4.5.2), and field monitoring performed for the well abandonment.

2.4.5.1 Materials and Equipment

The following provides a list of resources and equipment mobilized/demobilized to the Site for performance of the well abandonment activities:

- CME-55 drill rig.
- Support truck.
- Various hand tools.
- Personnel.
    - Driller.
    - Driller helper.

- Granular bentonite.
- Ready-mix concrete.

2.4.5.2 Abandonment Procedures

The following activities were performed by TTL for the well abandonment:

- The protective casings and concrete pads were pulled from the well casings.
- The well casings were pulled to remove as of the well casing as possible.
- The remaining well casing was removed by over-drilling with the CME-55 drill rig equipped with a 4-1/4-inch hollow stem augers.
- The former well hole was tremie grouted to the ground surface with a cement-bentonite grout.
- Soil was placed on top of the grout.
- The protective casings, concrete pads, well casings, and auger cuttings were placed in the Lower Placement Area.
    - These materials were covered with soil material from either the North or South Soil Removal Areas or with Steep Slope Area Soil Buttress soil.
- TTL completed well abandonment forms and submitted the forms to the Ohio Department of Natural Resources (ODNR), which are provided in Appendix K.
- Op-Tech marked the remaining wells, FR-MW-5 and FR-MW-7 with spray paint and survey flagging. No markings were necessary for FR-MW-6 located on the west side of Ford Road and not subjected to the Work.

2.4.5.3 CQA Monitoring

Brown and Caldwell's Geologist visually observed the well abandonment procedures. Daily Field Logs providing a summary of the well abandonments are provided in Appendix A. The following items were observed and documented by the Brown and Caldwell's Geologist for the well abandonments:

- Removal of the protective casings, concrete pads, and well casings including placement of these materials in the Lower Placement Area.
- Well augering for complete removal of the well casings including placement of the augered materials in the Lower Placement Area.
- Proper mixing of the cement-bentonite grout.
- Proper tremie grouting of the well holes.
- Placement of soil on top of the grout.

2.5 South Access Road

The South Access Road was constructed from the south side of the temporary construction entrance to the southern end of the Sedimentation Basin. The South Access Road was originally proposed to run along the top of the Sedimentation Basin berm (berm); however, due to weather conditions (rain events) and the associated flooding of the Black River, the location of the northern portion of the South Access Road was modified to run along the existing toe of the Steep Slope Area. This modification provided access for equipment and vehicles past the lower lying berm area to the temporary construction road serving the North and South Soil Removal Areas.

Brown and Caldwell's CQA Monitor(s) performed field oversight to document the materials, equipment, construction/installation methods, and CQA monitoring for the South Access Road construction. The following sections of the Certification Report provide a summary of the written documentation for the

materials and equipment (Section 2.4.1), construction/installation methods (Section 2.4.2), and CQA monitoring (Section 2.4.3) performed for the South Access Road construction.

2.5.1 Materials and Equipment

The materials used in the construction of the South Access Road included the following:

- 8 oz. non-woven geotextile.
- ODOT 304 aggregate subbase material.
- ODOT 411 stabilized crushed aggregate surface material.

The South Access Road was constructed using the following equipment:

- Cat D6 dozer.
- Cat 320D excavator.
- Cat 740 articulated end dump.
- Cat CS 433E vibratory smooth drum roller
- Various hand tools.

2.5.2 Construction/Installation Methods

The following activities were performed for the construction of the South Access Road:

- 8 oz. non-woven geotextile, ODOT 304 aggregate, and ODOT 411 aggregate were delivered to the Site.
- Op-Tech placed 8 oz. non-woven geotextile on the south access road. The geotextile was 15 feet wide and had seams that were perpendicular to the centerline of the road. The seams were overlapped a minimum of six inches and were shingled such that the down gradient seam was placed under the up gradient seam.
- Subbase material:
    - Op-Tech loaded ODOT 304 aggregate into the Cat 740 articulated end dump with the Cat 320D excavator.
    - The Cat 740 articulated end dump hauled the aggregate to the South Access Road working area.
    - The Cat D6 dozer pushed the aggregate in place onto the geotextile and graded the aggregate to the required six-inch thickness.
- Surface material:
    - Op-Tech then loaded ODOT 411 aggregate into the Cat 740 articulated end dump with the Cat 320D excavator.
    - The Cat 740 articulated end dump hauled the aggregate to the South Access Road working area.
    - The Cat D6 dozer pushed the aggregate in place onto the ODOT 304 aggregate subbase and graded the aggregate to the required six-inch thickness.
    - The aggregate was rolled with the Cat CS 433E vibratory smooth drum roller making a minimum of four passes.

2.5.3 CQA Monitoring

Brown and Caldwell's CQA monitor visually observed the South Access Road construction for workmanship and continuity. The South Access Road construction was documented in written format using field

books and forms with photographs used to provide visual documentation. Daily Field Logs providing a summary of the South Access Road construction are provided in Appendix A with the photographs and descriptive photograph log provided in Appendix B. The following items were observed and documented by the Brown and Caldwell's CQA monitor for the South Access Road construction:

- Proper placement, alignment, and overlap of the geotextile.
- Observed that equipment did not come in direct contact with the geotextile.
- Monitored the ODOT 304 aggregate placement for movement and/or wrinkles in the underlying geotextile.
- Proper width and thickness of the aggregates.
- Verified that the minimum number of four passes of the Cat CS 433E vibratory smooth drum roller.

2.6 Sedimentation Basin

Due to the number and intensity of rain events throughout the Phase I Remedial Action implementation, the Sedimentation Basin could not be constructed as designed. The frequent rain events caused numerous instances of river flooding that made the Site conditions unworkable and failure of the soil materials to meet compaction requirements. Various materials and construction methods were used in an attempt to construct the berm.

Multiple layers of geotextile fabric and additional Steep Slope structural fill soil material were used with little affect for bridging and/or adding strength to the soft, wet soils present at the proposed berm location. The berm was needed to provide access to the north end of the Site for work at the North and South Soil Removal Areas and construction of the Soil Buttress.

The area along the toe of the Steep Slope Area was higher in elevation and not as susceptible to the affects of the rain events and river flooding. For this reason, a decision was made to construct a temporary construction road along the toe of the Steep Slope Area to provide access to the North and South Soil Removal Areas.

Construction of the berm was limited to blading and grading the soil material present in the floodplain area to shape the berm to provide a temporary area for controlling surface water runoff from the areas disturbed during the Phase I Remedial Action implementation. The Sedimentation Basin construction was completed as part of the Phase II Remedial Action implementation (see Section 3.6 of the Certification Report).

Brown and Caldwell's CQA Monitor(s) performed field oversight to document the materials, equipment, construction/installation methods, and CQA monitoring for construction of the temporary berm. The following sections of the Certification Report provide a summary of the written documentation for the materials and equipment (Section 2.5.1), construction/installation methods (Section 2.5.2), CQA monitoring (Section 2.5.3), and tests (Section 2.5.4).

2.6.1 Materials and Equipment

The materials used in the construction of the temporary construction road and the temporary berm included the following:

- Temporary Construction Road:
    - 6-inch to 18-inch rock.
    - 6 oz. non-woven geotextile.
    - 4-inch to 8-inch rock.
- Temporary Berm:

- 8 oz. non-woven geotextile.
- Steep Slope Area structural fill soil furnished by Kurtz.

The temporary construction road and temporary berm were constructed using the following equipment:

- Cat D6 dozer.
- Cat 320D excavator.
- Cat 740 articulated end dump.
- Various hand tools.

2.6.2 Construction/Installation Methods

The following activities were performed for the temporary construction road and construction of the temporary berm:

- Temporary Construction Road:
  - The 4 to 8 inch rock and the 6 to 18 inch rock were delivered to the Site and stockpiled in the Upper Surface Area.
  - Op-Tech removed additional trees along the toe of the Steep Slope Area.
  - Minor grading was performed to slope the road base away from the toe of the Steep Slope Area.
  - Op-Tech excavated wet material from two depressions and placed the material away from the toe of the Steep Slope Area and west of the temporary berm.
  - The 6 to 18 inch rock was placed at the bottom of each excavated depression and up to the elevation of the road base.
  - Placed the 6 oz. geotextile over the entire length of the road from the toe of the South access Road to the southern end of the North Soil Removal Area.
  - Place a 12-inch layer of the 4 to 8 inch rock over the entire length of the road.
  - The aggregate was rolled using the Cat CS 433E vibratory smooth drum roller making a minimum of four passes.
- Berm Construction (southernmost 50 linear feet):
  - Steep Slope Area structural fill soil was delivered and stockpiled in the Upper Surface Area.
  - The trucks hauled the soil from the borrow areas to the Site.
  - Op-Tech loaded the soil into the Cat 740 articulated end dump with a Cat 320D excavator.
  - The Cat 740 articulated end dump hauled the soil to the working area of the temporary berm.
  - The soil was graded to a maximum 12-inch thick loose lifts with the Cat D6 dozer.
  - The thickness of each lift was controlled by visual observation.
  - The Brown and Caldwell CQA monitor(s) visually observed the graded soil for the presence of organic material, large rocks, roots, and other debris/foreign material. This material was removed from the soil.
  - After each lift was graded, the lift was compacted using the Cat CS 433E vibratory smooth drum roller making a minimum of five passes over the lift.

  - Prior to placing the next lift, Op-Tech scarified the top of the current lift and at the beginning of each workday.
  - At the end of each workday, Op-Tech sealed the top of the current lift with the Cat CS 433E vibratory smooth drum roller.
- Temporary Berm Construction:
  - Blade and grade the floodplain soil material along the proposed berm centerline with the Cat D6 dozer.

2.6.3 CQA Monitoring

Brown and Caldwell's CQA monitor visually observed the temporary construction road and the temporary berm construction for workmanship and continuity. The temporary construction road and the temporary berm construction were documented in written format using field books and forms with photographs used to provide visual documentation. Daily Field Logs providing a summary of the temporary construction road and temporary berm construction are provided in Appendix A with the photographs and descriptive photograph log provided in Appendix B. The following items were observed and documented by the Brown and Caldwell's CQA monitor for the temporary construction road and the temporary berm construction:

- Temporary Construction Road:
  - Verified removal of additional trees and placement of the removed trees in the Upper Surface Area.
  - Observed the minor grading to set the slope of the road base for the presence of waste materials; no waste material was encountered.
  - Observed the depression areas excavation and proper placement of the excavated materials.
  - Verified the placement of the 6 to 18 inch rock from the bottom of the excavation up to the road base elevation.
  - Proper placement, alignment, and overlap of the geotextile.
  - Observed that equipment did not come in direct contact with the geotextile.
  - Monitored the 4 to 8 inch rock placement for movement and/or wrinkles in the underlying geotextile.
  - Verified the width and thickness of the placed 4 to 8 inch rock.
  - Verified the aggregate was rolled using the Cat CS 433E vibratory smooth drum roller making a minimum of four passes.
- Berm Construction (southernmost 50 linear feet):
  - The subbase of the berm was properly scarified for placement of the first soil lift.
  - The presence of large rocks, roots, debris, foreign materials, etc. in the soil material. These types of items, when observed, were removed from the soil material.
  - Visually observed the placement and uniformity of the lifts to a maximum uncompacted thickness of 12 inches.
  - Verified the performance of adequate number of passes (minimum of five passes) with the Cat CS 433E vibratory smooth drum roller.
  - Verified that the last lift placed each day was sealed at the end of each workday to preserve the integrity of that lift and promote surface water runoff in the event of a storm.

  - Verified that the surface of the each lift was scarified prior to placement of the next lift.
- Temporary Berm Construction:
  - Visually observed the placement and grading of the floodplain soil material along the proposed berm centerline.
  - Verified the width and lines of sideslopes of the temporary berm.

2.7 Lower Area Dewatering Pad

The Lower Area Dewatering Pad (Dewatering Pad) provided an area to place wet soil excavated from the North and South Soil Removal Areas. This allowed the wet soils to be dewatered before being hauled and placed in either the Lower Placement Area or the Upper Surface Soil Placement Area (Soil Placement Area). The Dewatering Pad was covered with a 30-mil textured high density polyethylene (HDPE) geo-membrane and equipped with a sump constructed of a 36-inch diameter corrugated plastic pipe (CPP).

The water in the sump was pumped to a 550-gallon poly tank located in the vicinity of the North Soil Removal Area. This water along with water from the North and South Soil Removal Areas was pumped to one of two Baker tanks located in the Upper Surface Area. The Baker tanks and granular activated carbon (GAC) unit were used to store and treat the water prior to discharge to the City of Elyria wastewater treatment plant (WWTP).

2.7.1 Materials and Equipment

The materials used in the construction of the Dewatering Pad included the following:

- Steep Slope Area structural fill soil.
- 30-mil textured HDPE geomembrane.
- 6-mil Fire Retardant 20x100 Poly Material.
- 36-inch diameter CPP sump.

The Dewatering Pad was constructed using the following equipment:

- Cat D6 dozer.
- Cat 320D excavator.
- Cat 725 articulated end dump.
- 500-gallon poly tank and associated pumps and piping.
- Two, 20,000-gallon Baker tanks, granular activated carbon (GAC) unit, and associated pumps and piping.
- Various hand tools.

2.7.2 Construction/Installation Methods

The following activities were performed for the construction of the Dewatering Pad:

- Steep Slope Area structural fill was delivered to the Site.
- Op-Tech loaded the soil into a Cat 725 articulated end dump with a Cat 320D excavator.
- The Cat 725 articulated end dump hauled the soil to the Dewatering Pad area.
- The Cat D6 dozer pushed the soil into place creating a two-foot wide by two-foot tall containment berm on three sides of the Dewatering Pad. One side of the Dewatering Pad was left open to allow trucks to back up and dump the excavated wet soil material into the Dewatering Pad.

- The bottom of the Dewatering Pad was graded to slope to the middle and then to the eastern end for the water to flow into the sump.
- Op-Tech manually installed the HDPE geomembrane in the Dewatering Pad with the edges of the geomembrane extending across and to the outside edge of the berm.
- A 36-inch diameter CPP sump was installed to collect the water from the dewatering process.
- Op-Tech installed 6-mil poly tarp over the geomembrane in order to keep the geomembrane from becoming cross-contaminated allowing the Dewatering Pad to be used for both the North and South Soil Removal Areas.
    - Following removal of the soil from the North Soil Removal Area, the 6-mil poly tarp was removed and a new 6-mil poly tarp was installed.

The following activities were performed for the water collected at the Dewatering Pad and water pumped from the North and South Soil Removal Areas:

- The Baker tanks supplied by E-Tanks of Massillon, Ohio and GAC unit supplied by Schrader Environmental Systems, Inc. (Schrader) of Ithaca, Michigan were delivered to the Site.
- The Baker tanks were set up for one tank to receive the water from the poly tank used to store water from the Dewatering Pad and the North and South Soil Removal Areas.
- Water from the first Baker tank was pumped through the GAC unit and into the second Baker tank.
- A representative from the WWTP visited the Site to perform an inspection of the onsite water treatment system. The onsite water treatment system was approved following the inspection.
- Op-Tech collected a sample of the water from the second Baker tank for submittal to Pace Analytical in Columbus, Ohio for analysis of the following parameters provided by the WWTP:
    - Organochloride Pesticides/PCB.
    - Mercury.
    - ICP Metals, Total.
    - ICP Mineral.
    - Base/Neutrals/Acids.
    - Purgeables.
    - Total Cyanide.
    - pH.
- Following receipt of the analytical results and review and acceptance by the WWTP, the water was pumped to the WWTP. Approximately 20,000 gallons of water was pumped. The analytical results are provided in Appendix H.
- The Baker tanks were removed from the Site by E-Tanks.
- The GAC unit was removed from the Site by Schrader with the spent carbon either recycled or disposed in a facility licensed to accept the spent carbon.

2.7.3 CQA Monitoring

Brown and Caldwell's CQA monitor visually observed the Dewatering Pad construction for workmanship and continuity. The Dewatering Pad construction was documented in written format using field books and forms with photographs used to provide visual documentation. Daily Field Logs providing a summary of the Dewatering Pad construction are provided in Appendix A with the photographs and descrip-

tive photograph log provided in Appendix B. The following items were observed and documented by the Brown and Caldwell's CQA monitor for the Dewatering Pad construction:

- The geomembrane, sump, and poly tarp were visually observed for conformance with the specifications, as well as to verify there were no signs of damage. The geomembrane, sump, and poly tarp were determined to be in conformance with the specifications and no visual damage to the geomembrane, sump, and poly tarp was observed.
- Proper horizontal and vertical location.
- Proper size of dewatering pad and height of berm.
- Proper grade toward the sump.
- Proper installation of the geomembrane, sump, and poly tarp.
- Verified that the geomembrane, sump, and poly tarp were not damaged during installation and use.

2.8 North Soil Removal Area

The North Soil Removal Area is defined as the area from the installed slurry wall to the bank/edge of the Black River (see Project Record Drawing RD-13 for the location). Based on the results of the Remedial Investigation, the soils at this location were impacted with light non-aqueous phase liquid (LNAPL) and polychlorinated biphenyls (PCBs) and were excavated as part of the Phase I remediation. The slurry wall was installed to minimize the flow of groundwater into the excavation during the soil removal activity. The slurry wall was constructed with a slurry mix permeability of less than or equal to 1×10^{-6} centimeters per second (cm/sec).

Screening criteria for segregating the excavated soils was developed based on discussions with William T. Frederick of the ACOE and Demaree Collier of the U.S. EPA. A flow chart for the North Soil Removal Area excavated soil was developed to specify the agreed upon procedures for field screening of the soil with PCB test kits and a photoionization detector (PID). The flow chart established criteria for determining where the excavated soil would be staged at the Site.

Initial field screening was performed, as the soil was excavated, for gross contamination related to visible free product, presence of staining, strong hydrocarbon odors, and PCB test kit and PID readings above 50 parts per million (ppm). Soil with initial field screening results that were less than 50 ppmfor volatile organic compounds (VOCs) as measured with the PID and PCB test kits for PCBs with no visible/drainable free product was hauled and placed in the Lower Soil Placement Area. Soil with initial screening results less than 50 ppm for VOCs and/or PCBs with free product was staged on the Dewatering Pad. Soil with field screening results greater than or equal to 50 ppm VOCs and/or PCBs was hauled and placed on the Dewatering Pad. Soil accumulated on the Dewatering Pad was screened a second time using the PCB test kits. Re-screened soil with results less than 50 ppm was hauled and placed in the Lower Soil Placement Area. Re-screened soil with results greater than or equal to 50 ppm and no visible/drainable free product was hauled and placed in the Upper Surface Soil Placement Area. Re-screened soil with results greater than or equal to 50 ppm and visible/drainable free product was left staged on the Dewatering Pad. Representatives of the ACOE and the Ohio EPA were onsite during the North Soil Removal Area work to observe and assist with interpreting the field screening results. The North Soil Removal Area Excavated Soil flow chart is provided as Figure 1.

Sample collection, laboratory analysis, and results for the staged soil are discussed in Sections 2.10.2 and 2.10.3 Upper Surface Soil Placement Area stockpile testing of the Certification Report.

The North Soil Removal Area discussion is presented in three parts: slurry wall installation, soil excavation, and area restoration. A summary of the materials and equipment used, construction/installation methods, and CQA monitoring is presented for each of these activities. Brown and Caldwell's CQA

Monitor performed field oversight to document the materials, equipment, construction/installation methods, and CQA monitoring for the North Soil Removal Area activities.

2.8.1 Slurry Wall

Op-Tech excavated the trench for the slurry wall and Slurry Systems Inc., (SSI) of Gary Indiana constructed the slurry wall. The slurry was a Portland/slag cement-bentonite mixture. The completed slurry wall is 165.1 feet in length with the north wing wall 37.5 feet, the south wing wall 31.6 feet, and the back wall 96.0 feet in length. The top and bottom elevations of the slurry wall are as follows:

Wall Section	East End		West End		North		South		Center	
	Top	Bottom	Top	Bottom	Top	Bottom	Top	Bottom	Top	Bottom
North Wing Wall	602.3	591.4	606.1	594.9						
South Wing Wall	601.5	591.3	605.7	595.9						
Back (West) Wall					606.1	594.9	605.7	595.9	605.9	598.8

The bedrock was encountered at shallower depths than expected in the North Soil Removal Area.

The materials and equipment used (Section 2.8.1.1), construction/installation methods (Section 2.8.1.2), and CQA monitor observations (Section 2.8.1.3) for each of the Site Restoration and Closure activities are discussed in the following sections.

2.8.1.1 Equipment and Materials

The materials used in the construction of the slurry wall were as follows:

- Portland Type I-II cement; 100 pound bags.
- Slag cement; 100 pound bags.
- Sodium bentonite; 100 pound bags.
- Fritz Pak cement.
- Water supplied from a City of Elyria fire hydrant located on the west side of Ford Road.

The slurry wall was constructed using the following equipment:

- Cat 320D excavator.
- Cat 725 articulated end dump.
- Cat TL1255 telehandler forklift.
- Mixing plant - 700-gallon mixer with associated generator, pumps, and piping.
- Various hand tools.

2.8.1.2 Construction/Installation Methods

The following activities were performed for the construction of the slurry wall:

- The slurry wall centerline was marked in the field.
- Op-Tech used the Cat 320D excavator to excavate a three-foot wide trench to the depth of bedrock.

  - Trench sounding for the depth of the trench every 10 lineal feet.
- SSI mixed the slurry in the mixing plant with the following order of materials:
  - Water.
  - Cement additive.
  - Bentonite.
  - Portland cement.
  - Slag cement.
- Sampling:
  - Samples of the slurry mixture were collected twice per day.
  - Samples from the slurry wall were collected every 100 lineal feet of wall.
  - The results of the slurry wall testing are provided in Appendix I.
- As the excavation of the trench progressed, SSI pumped the slurry mixture from the mixing plant to the excavated trench through a pipeline.
- The slurry mixture was maintained, in the trench, at no less than 2 feet below the existing ground.
- The trench was excavated using a panel-by-panel methodology to aid in maintaining the slurry level in the trench.
- Excavated soils were loaded into a Cat 725 articulated end dump and hauled to the Dewatering Pad.
- At the end of the day, completed panels were topped off with slurry mixture to address any shrinkage due to stiffening of the wall.
- The following morning, all weep water was removed from the top of the slurry wall by pumping into the poly tank and the completed panels were topped off with slurry mixture.
- The new slurry wall panel was cut into the previous day's ending panel to begin construction of the next day's beginning panel.
- During the slurry wall installation, seeps were observed centrally located along the upper edge of the western slurry wall excavation. Following completion of this section of the slurry wall, an oily sheen was observed on top of the weep water. The origination point of the oily material was approximately 15 feet from the southern back corner along the top of the slurry wall. Based on discussions with U.S. EPA, the ACOE, and Ohio EPA, mitigation measures were implemented as follows:
  - At the direction of the Brown and Caldwell CQA Monitor, Op-Tech constructed a soil berm around the river end of the southern wing wall.
  - Absorbent booms were used to direct the weep water with the oily sheen to the end of the southern wing wall.
  - The weep water including the oily sheen was pumped to the poly tank and eventually to the Baker tank at the Upper Surface Area. The weep water with the oily sheen was observed throughout the day and pumped to the poly tank at a minimum at the end of each work day.

2.8.1.3 CQA Monitoring

Field books were used to document activities in written format with photographs used to provide visual documentation. Daily Field Logs providing a summary of the slurry wall construction are provided in

Appendix A with photographs and a descriptive photograph log provided in Appendix B. The Brown and Caldwell CQA Monitor visually observed the construction of the slurry wall for workmanship and continuity including the following:

- Unloading of materials.
  - Monitored the unloading operations for dust issues and regulated the unloading activities if dust became an issue during unloading.
- Mixing of the slurry materials.
  - Monitored the mixing operations for dust issues and regulated the mixing activities if dust became an issue.
  - Collection of samples for performance of field and laboratory testing.
  - Field testing performed by SSI.
- Trench excavation for location and depth.
  - Performance of trench soundings.
- Loading and placement of excavated soils in the Dewatering Pad.
- The pumping of the slurry into the excavated trench.
- Weep water removal.
- Keying in of the slurry wall to the previous day's slurry wall.
- Performed air monitoring and soil screening.
- Monitored the oily sheen on top of the weep water.
  - Adequate volume and height of the soil berm used to contain the weep water with the oily sheen.
  - Placement of the absorbent booms to direct the weep water with the oily sheen to the end of the southern wing wall.
  - Pumping the weep water with the oily sheen to the poly tank.

2.8.2 Soil Excavation

The soil excavation was performed from the edge of the Black River between the north and south wing walls of the slurry wall to the western (back) wall of the slurry wall. The soil was removed down to the bedrock present within the limits of the North Soil Removal Area. Super sack sand bags were placed within the Black River as a barrier to 1) keep water from the Black River from entering the work area i.e. the soil removal area; 2) keep water from the excavation from entering the Black River; and 3) to provide an adequate work area at the river bank.

The surface area of the North Soil Removal Area was 4,126.2 square feet with 12.1 feet average excavation depth and 16.7 feet maximum excavation depth. The excavated soil volume was 1,844 cubic yards. Of this volume, 770.4 cubic yards of soil was transported to the Upper Surface Soil Placement Area, placed in a stockpile, and covered with plastic. The remaining 1,073.6 cubic yards of soil was placed in one of the two Lower Soil Placement Areas. The soil from the North Soil Removal Area was segregated from the soil placed in the Upper Surface Soil Placement Area from the South Soil Removal Area.

The soil excavation, screening, and soil placement location are discussed in the following sections of the Certification Report.

2.8.2.1 Materials and Equipment

The materials used in the North Soil Removal Area soil excavation were as follows:

- Super Sack sand bags.
- Medium/coarse grain sand.
- 6-mil fire retardant 20x100 poly material.

The following equipment was used for the North Soil Removal Area soil excavation:

- Cat D6 dozer.
- Cat 320D excavators.
- Cat 725 articulated end dumps.
- Various hand tools.

2.8.2.2 Construction/Installation Methods

The following activities were performed for the North Soil Removal Area soil excavation:

- Super Sack sandbags (4-foot x 4-foot x 4-foot in dimension) were made by filling with medium to coarse-grained sand at the Upper Surface Area. The completed Super Sack sandbags were hauled to the North Soil Removal Area in the Cat 725 articulated end dumps for construction of the Black River barrier.
- Super Sack sandbags were placed two rows wide and one row high along the toe of the slope of the riverbank between the north and south wing walls of the slurry wall approximately 15 feet from the toe of the slope of the riverbank as a barrier to prevent river water from coming in on the excavation.
- A Cat D6 dozer stripped one foot of overburden from the soil excavation area.
- A Cat 320D excavator loaded the stripped soil into a Cat 725 articulated end dump and the soil was hauled and placed in the Lower Soil Placement Area or the Upper Surface Soil Placement Area depending on the results of the soil screening performed by the Brown and Caldwell CQA Monitor.
- Test pits were excavated with the Cat 320D excavator to pre-screen the soil for PCBs and VOCs. This provided an indication of where impacted soil was located both horizontally and vertically.
    - Eight test pits were excavated at depths ranging from three to seven feet.
    - The soil was screened using the PCB test kits and the PID.
- Soil excavation was performed as follows:
    - Excavation began at the northern edge of the soil removal area and progressed to the south.
    - Soil was excavated from the top of the slurry wall, at a 1:1 (H:V) slope to the bottom of the excavation i.e where bedrock was encountered to provide stability.
    - A two-foot strip of soil was left in place along the eastern edge of the soil removal area.

      This allowed Op-Tech to place a sump at the northeast corner of the excavation to pump water/liquid from the sump to the 500-gallon poly tank located west of the slurry wall, when needed.
    - Following completion of the soil excavation, Op-Tech excavated the two-foot strip of soil along the eastern edge of the excavation.

- As the soil excavation progressed, the Brown and Caldwell CQA monitor performed the following field screening procedures for each bucket of excavated soil:
    - A small amount of soil was taken from the excavator bucket and placed in a Ziploc bag.
    - The PID monitoring tube was inserted into the bag and the soil was screened for VOCs with an action level of greater than or equal to 50 ppm.
        - For screening results that were less than 50 ppm VOCs and PCBs with no visible/drainable free product, the soil was placed in the Lower Soil Placement Area; if free product was observed, the soil was staged on the Dewatering Pad.
        - For screening results that were greater than or equal to 50 ppm VOCs, the soil was staged on the Dewatering Pad.
        - Accumulated soil was re-screened with the PCB test kits on the Dewatering Pad as follows:
            - Soil with results less than 50 ppm and no visible/drainable free product was hauled and placed in the Lower Soil Placement Area.
            - Soil with results greater than or equal to 50 ppm and no visible/drainable free product was hauled and staged in the Upper Surface Soil Placement Area.
            - Soil that continued to exhibit visible/drainable free product was left staged on the Dewatering Pad regardless of the re-screening results. This soil was screened with the PCB test kits when the visible/drainable free product was no longer present for placement in the Lower Soil Placement Area (less than 50 ppm) or staged in the Upper Surface Soil Placement Area (less than or equal to 50 ppm).
        - Soil excavated below the water table was staged on the Dewatering Pad, allowed to dewater, and was field screened to determine where to place/stage the soil.
        - The air monitoring and soil screening results recorded by Brown and Caldwell's CQA monitor are provided in Appendix J.
- Excavated soil was loaded in the Cat 725 articulated end dump and placed in either the Lower Soil Placement Area or the Upper Surface Soil Placement Area based on the screening results previously discussed.
    - Soil placed in the Upper Surface Soil Placement Area was covered with plastic; panels were overlapped a minimum of 12-inches and sand bags were placed along the panel overlaps and around the outside edges.
        - Soil from the North Soil Removal Area was segregated from the soil from the South Soil Removal Area when placed in the Upper Surface Soil Placement Area.
    - There was a Cat 725 articulated end dump dedicated for use at the North Soil Removal Area
    - One Cat 725 articulated end dump was dedicated to hauling to the Upper Surface Soil Placement Area and a second Cat 725 articulated end dump was dedicated to hauling to the Lower Soil Placement Area.
- Wet soil material was placed in the Lower Area Dewatering Pad and allowed to dewater and dry as much as practical.
- Soil placed in the Dewatering Pad was screened, as previously discussed, prior to being removed from the Dewatering Pad.
- Soil was excavated to bedrock.

2.8.2.3 CQA Monitoring

Daily Field Logs providing a summary of the North Soil Removal Area soil excavation activities are provided in Appendix A with the construction photographs and descriptive photograph log provided in Appendix B. The Brown and Caldwell CQA Monitor visually observed the North Soil Removal Area soil excavation for workmanship and continuity including the following:

- Verified the depth of the excavation.
- Proper handling and placement of the excavated soil.
    - Verified that the soil placed in the Upper Surface Soil Placement Area was covered with plastic and the plastic was properly anchored.
- Proper dewatering, screening, and placement of the wet excavated soil.
- Performed air monitoring and soil screening. A multi-gas meter and a PID were used to conduct the air monitoring. Atmospheric concentrations within the breathing zone were monitored for methane (LEL), hydrogen sulfide, oxygen, and VOCs. The PID and PCB test kits were used to conduct the soil field screening. The air monitoring and soil field screening results recorded by the Brown and Caldwell's CQA monitor are provided in Appendix J.

2.8.3 North Soil Removal Area Restoration

The restoration of the North Soil Removal Area consisted of backfilling the excavation with low permeability soil and constructing a riprap wall at the newly constructed riverbank.

2.8.3.1 Materials and Equipment

The materials used in the North Soil Removal Area restoration included the following:

- Low permeability soil, hydraulic conductivity (k) of 1×10^{-7} cm/sec.
- ODOT Type A riprap.

The North Soil Removal Area restoration was performed using the following equipment:

- Cat D6 dozer.
- Cat 320D excavators.
- Cat 725 articulated end dumps.
- Cat CP56 vibratory sheepsfoot compactor.
- Cat CS 433E vibratory smooth drum roller.
- Various hand tools.

2.8.3.2 Construction/Installation Methods

Restoration of the North Soil Removal Area consisted of placing and compacting the low permeability soil to the level of the adjacent ground surface around the excavation limits and construction of the riprap wall against the face of the low permeability soil at the riverbank. The following narrative provides a discussion of these two activities.

- Low Permeability Soil Backfill:
    - Low permeability soil (soil) was delivered to the Site and stockpiled.
    - Op-Tech loaded the soil into Cat 725 articulated end dumps with a Cat 320D excavator.
    - The Cat 725 articulated end dumps hauled the soil to the North Soil Removal Area.
    - The Cat D6 dozer pushed the soil into place, in uniform 12-inch loose lifts.
    - Op-Tech compacted each lift with the Cat CP56 vibratory sheepsfoot compactor with a minimum of five passes.

  - Prior to placing the next lift, Op-Tech scarified the top of the current lift.
  - At the end of each day, Op-Tech sealed the current lift with the Cat CS 433E vibratory smooth drum roller.
  - The soil was placed and compacted to the level of the adjacent ground surface.
- Riprap Wall Construction:
  - ODOT Type A riprap (riprap) was delivered to the Site and stockpiled.
  - Op-Tech loaded the riprap into the Cat 725 articulated end dumps with the Cat 320D excavator.
  - The Cat 725 articulated end dumps hauled all of the riprap to the top of the riverbank and stockpiled the material.
  - The sand material present on the river bottom was moved with the Cat 320D excavator so the riprap pieces could "key" into the bedrock.
  - The Cat 320D excavator was used to pick up and place individual pieces of riprap along the face of the low permeability soil. Each piece of riprap was manipulated with the excavator bucket to "lock" the pieces of riprap together.

2.8.3.3 CQA Monitoring

The Brown and Caldwell CQA Monitor visually observed the North Soil Removal Area restoration for workmanship and continuity. Daily Field Logs providing a summary of the North Soil Removal Area restoration activities are provided in Appendix A with the construction photographs and descriptive photograph log provided in Appendix B. The following items were observed and documented by the Brown and Caldwell's CQA monitor during performance of the North Soil Removal Area restoration activities:

- Low Permeability Soil Backfill:
  - Verified that each lift of soil was free of loose material, foreign objects, rocks greater than three inches in maximum dimension, and standing water.
  - Verified the placement and uniformity of the lifts to a maximum uncompacted thickness of 12 inches.
  - Verified that the minimum number of five passes of the Cat CP56 vibratory sheepsfoot compactor.
  - Performed in-place density testing using a nuclear density gauge to verify acceptance of compaction of each lift as discussed in Section 2.7.3.4 of the Certification Report.
  - Verified that the surface of each lift was scarified prior to placement of the next lift.
  - Verified that the surface of the top lift was sealed at the end of each workday and scarified at the beginning of each workday before additional soil was placed.
- Riprap Wall Construction:
  - Verified the riprap was "keyed" into the bedrock.
  - Verified the thickness of the riprap wall.

2.8.3.4 Quality Assurance (QA) Testing

Field QA testing was performed for the off-site soil materials used in the North Soil Removal Area restoration. The minimum compaction specification for the off-site soil material was as follows:

- 95 percent of the maximum dry density with moisture content ±3% of optimum as determined by the Standard Proctor.

The Brown and Caldwell CQA monitor(s) performed the in-situ moisture/density testing using a nuclear density gauge for at least two tests per lift per acre in accordance with the CQAP prior to acceptance of the lift by the Brown and Caldwell CQA monitor(s). A total of 13 in-situ moisture/density tests were performed during the restoration of the North Soil Removal Area. The in-situ moisture/density test results are provided in Appendix G.

2.9 South Soil Removal Area

The South Soil Removal Area encompassed an area approximately 22 feet by 33 feet in dimension located in the floodplain midway between the north and south ends of the Site (see Project Record Drawing RD-11 for the location). Investigation performed as part of the Remedial Design determined that soils at this location were impacted with chlorinated solvents and should be excavated as part of the Phase I remediation.

Screening criteria for segregating the excavated soil was developed based on discussions with William T. Frederick of the ACOE and Demaree Collier of the U.S. EPA. A flow chart for the South Soil Removal Area excavated soil was developed to specify procedures for field screening of the soil with a PID. The flow chart established criteria for determining where the excavated soil would be staged at the Site.

Initial field screening was performed as the soil was excavated for gross contamination related to visible free product, presence of staining, strong hydrocarbon odors, and PID readings above 30 ppm. Soil with initial field screening results that were less than 30 ppm for VOCs with no visible/drainable free product was hauled and placed in the Lower Soil Placement Area. Soil with initial screening results less than 30 ppm for VOCs with free product was staged on the Dewatering Pad. Soil with field screening results greater than or equal to 30 ppm VOCs and no visible/drainable free product was hauled and placed in the Upper Surface Soil Placement Area. Soil with field screening results greater than or equal to 30 ppm VOCs with visible/drainable free product was placed on the Dewatering Pad to allow the soil to dewater before being re-screened and hauled and placed in the appropriate staging area depending on the PID results. The action level of 30 ppm was chosen for the South Soil Removal Area based on a comparison of the head space readings obtained during the site investigation activities and the laboratory vinyl chloride (VC) concentrations in the same locations. A concentration of 30 ppm correlates to a value of 6 milligrams per kilogram (mg/kg), which is the RCRA Universal Treatment Standard (UTS) for VC.

Representatives of the ACOE and the Ohio EPA were onsite during the South Soil Removal Area work to observe and assist with interpreting the field screening results. The South Soil Removal Area Excavated Soil flow chart is provided as Figure 2.

Sample collection, laboratory analysis, and results for the staged soil are discussed in Sections 2.10.2 and 2.10.3 Upper Surface Soil Placement Area stockpile testing of the Certification Report.

The South Soil Removal Area discussion is presented in two parts: soil excavation and area restoration. A summary of the materials and equipment used, construction/installation methods, and CQA monitoring is presented for each of these activities. Brown and Caldwell's field monitor performed field oversight to document the materials, equipment, construction/installation methods, and CQA monitoring for the South Soil Removal Area activities.

2.9.1 Soil Excavation

The soil excavation was performed at the field surveyed location identified in the RDWP and shown on the Phase II Remedial Action construction drawings . The soil was removed down to the bedrock present within the limits of the South Soil Removal Area.

The surface area of the South Soil Removal Area is 1,071.8 square feet with 8.4 feet average excavation depth and 14.4 feet maximum excavation depth. The excavated soil volume is 333.1 cubic yards. Of

this volume, 90 cubic yards of soil was transported to the Upper Surface Soil Placement Area, placed in a stockpile, and covered with plastic. The remaining 243.1 cubic yards of soil was placed in one of the two Lower Soil Placement Areas. The soil from the South Soil Removal Area was segregated from the soil placed in the Upper Surface Soil Placement Area from the North Soil Removal Area.

The soil excavation, screening, and where the soil was placed is discussed in the following sections of the Certification Report.

2.9.1.1 Equipment

The following equipment were used for the South Soil Removal Area soil excavation:

- Cat 320D excavator.
- Cat 725 articulated end dumps.
- Various hand tools.

2.9.1.2 Construction/Installation Methods

The following activities were performed during the South Soil Removal Area soil excavation:

- The limits of the excavation area were marked in the field.
- The Cat 320D excavator began excavation in the center of the South Soil Removal Area and progressed outward toward the excavation area limits.
- As the soil excavation progressed, the Brown and Caldwell CQA monitor performed the following field screening procedures for each bucket of excavated soil:
    - A small amount of soil was taken from the excavator bucket and placed in a Ziploc bag.
    - The PID monitoring tube was inserted into the bag and the soil was screened for VOCs with an action level of greater than or equal to 30 ppm.
        - For field screening results that were less than 30 ppm VOCs with no visible/drainable free product, the soil was placed in the Lower Soil Placement Area; if free product was observed, the soil was staged on the Dewatering Pad.
        - For field screening results that were greater than or equal to 30 ppm VOCs with no visible/drainable free product, the soil was staged in the Upper Surface Soil Placement Area.
        - For field screening results greater than or equal to 30 ppm VOCs with visible/drainable free product, the soil was staged on the Dewatering Pad
        - Accumulated soil was re-screened with the PID on the Dewatering Pad as follows:
            - Soil with results less than 30 ppm and no visible/drainable free product was hauled and placed in the Lower Soil Placement Area.
            - Soil with results greater than or equal to 30 ppm and no visible/drainable free product was hauled and staged in the Upper Surface Soil Placement Area.
            - Soil that continued to exhibit visible/drainable free product was left staged on the Dewatering Pad regardless of the re-screening results. This soil was screened with the PID when the visible/drainable free product was no longer present for placement in the Lower Soil Placement Area (less than 30 ppm) or staged in the Upper Surface Soil Placement Area (less than or equal to 30 ppm).
        - Soil excavated below the water table was staged on the Dewatering Pad, allowed to dewater, and was field screened to determine where to place/stage the soil.

        - The air monitoring and soil screening results recorded by Brown and Caldwell's CQA monitor are provided in Appendix J.

- Excavated soil was loaded in the Cat 725 articulated end dump and placed in either the Lower Soil Placement Area or the Upper Surface Soil Placement Area based on the screening results previously discussed.
    - Soil placed in the Upper Surface Soil Placement Area was covered with plastic; panels were overlapped a minimum of 12-inches and sand bags were placed along the panel overlaps and around the outside edges.
        - Soil from the South Soil Removal Area was segregated from the soil from the North Soil Removal Area when placed in the Upper Surface Soil Placement Area.
    - There was a Cat 725 articulated end dump dedicated for use at the South Soil Removal Area.
    - One Cat 725 articulated end dump was dedicated to hauling to the Upper Surface Soil Placement Area and a second Cat 725 articulated end dump was dedicated to hauling to the Lower Soil Placement Area.
- Wet soil material was placed in the Dewatering Pad and allowed to dewater and dry as much as practical.
- Soil placed in the dewatering pad was screened, as previously discussed, prior to being removed from the dewatering pad.
- The soil was excavated to bedrock.
- Following completion of the soil excavation, the bucket of the excavator was decontaminated in the Dewatering Pad. The decontamination water was pumped to the temporary treatment area at the Upper Surface Area. The decontamination water was sent to the City of Elyria WWTP (refer to Section 2.6).

2.9.1.3 CQA Monitoring

Daily Field Logs providing a summary of the South Soil Removal Area soil excavation activities are provided in Appendix A with the construction photographs and descriptive photograph log provided in Appendix B. The Brown and Caldwell CQA Monitor visually observed the South Soil Removal Area soil excavation for workmanship and continuity including the following:

- Verified the limits of the South Soil Removal Area marked in the field.
- Verified the depth of the excavation.
- Proper handling and placement of the excavated soil.
- Proper dewatering, screening, and placement of the wet excavated soil.
- Performed air monitoring and soil screening. A multi-gas meter and a PID were used to conduct the air monitoring. Atmospheric concentrations within the breathing zone were monitored for methane (LEL), hydrogen sulfide, carbon monoxide, oxygen, and VOCs. The PID was also used to conduct the soil screening. The air monitoring and soil screening results recorded by the Brown and Caldwell's CQA monitor are provided in Appendix J.

2.9.2 South Soil Removal Area Restoration

The restoration of the South Soil Removal Area consisted of backfilling the bottom three feet of the excavation with ODOT 57 aggregate and the rest with Steep Slope structural fill soil.

2.9.2.1 Equipment and Materials

The materials used in the restoration of the South Soil Removal Area were as follows:

- ODOT 57 aggregate.
- Steep Slope structural fill soil.

The South Soil Removal Area restoration was performed using the following equipment:

- Cat D6 dozer.
- Cat 320D excavators.
- Cat 725 articulated end dumps.
- Cat CP56 vibratory sheepsfoot compactor.
- Various hand tools.

2.9.2.2 Construction/Installation Methods

The following activities were performed for the restoration of the South Soil Removal Area:

- ODOT 57 aggregate was delivered to the Site and stockpiled.
- Steep Slope structural fill soil (soil) was delivered to the Site and stockpiled.
- Op-Tech loaded the aggregate into the Cat 725 articulated end dumps with a Cat 320D excavator.
- The Cat 725 articulated end dumps hauled the aggregate to the South Soil Removal Area.
- The Cat 320D excavator placed the aggregate in the bottom of the excavation to a thickness of three feet.
- Op-Tech loaded the soil into Cat 725 articulated end dumps with a Cat 320D excavator.
- The Cat 725 articulated end dumps hauled the soil to the South Soil Removal Area.
- The Cat D6 dozer pushed the soil into place, in uniform 12-inch loose lifts.
- Op-Tech compacted each lift with the Cat CP56 vibratory sheepsfoot compactor with a minimum of five passes.
- Prior to placing the next lift, Op-Tech scarified the top of the current lift.
- The soil was placed and compacted to the level of the adjacent ground surface.

2.9.2.3 CQA Monitoring

The Brown and Caldwell CQA Monitor visually observed the South Soil Removal Area restoration for workmanship and continuity. Daily Field Logs providing a summary of the South Soil Removal Area restoration activities are provided in Appendix A with the construction photographs and descriptive photograph log provided in Appendix B. The following items were observed and documented by the Brown and Caldwell's CQA monitor during performance of the South Soil Removal Area restoration activities:

- Verified that the bottom three feet of backfill material was ODOT 57 aggregate.
- Verified that each lift of soil was free of loose material, foreign objects, rocks greater than three inches in maximum dimension, and standing water.
- Verified the placement and uniformity of the lifts to a maximum uncompacted thickness of 12 inches.
- Verified that the minimum number of five passes of the Cat CP56 vibratory sheepsfoot compactor.

- Performed in-place density testing using a nuclear density gauge to verify acceptance of compaction of each lift as discussed in Section 2.8.2.4 of the Certification Report.
- Verified that the surface of each lift was scarified prior to placement of the next lift.

2.9.2.4 Quality Assurance (QA) Testing

Field QA testing was performed for the off-site soil materials used in the South Soil Removal Area restoration. The minimum compaction specification for the off-site soil material was as follows:

- 95 percent of the maximum dry density with moisture content ±3% of optimum as determined by the Standard Proctor.

The Brown and Caldwell CQA monitor(s) performed the in-situ moisture/density testing using a nuclear density gauge for at least two tests per lift per acre in accordance with the CQAP prior to acceptance of the lift by the Brown and Caldwell CQA monitor(s). A total of 10 in-situ moisture/density tests were performed during the restoration of the South Soil Removal Area. The in-situ moisture/density test results are provided in Appendix G.

2.10 Site Restoration and Closure

Site Restoration and Closure activities were performed from November 15, 2011 through December 17, 2011 including the following:

- Placement of soil material from the former North and South Soil Removal Areas in two Lower Soil Placement Areas above elevation 610 msl.
- Construction of a drainage swale outside the temporary berm to aid in surface water control.
- Planting willow stakes at the top of the riprap placed along the riverbank at the former North Soil Removal Area.
- Vegetation of disturbed areas with temporary seed mix by hydroseeding with wood fiber hydro mulch including tackifier and straw.
- Upper Surface Soil Placement Area stockpile testing.
- Op-Tech demobilization from the Site.
- Placement of additional riprap along the riverbank at the former North Soil Removal Area from May 7, 2012 through May 10, 2012.

The materials and equipment used (Section 3.10.1), construction/installation methods (Section 3.10.2), and CQA monitor observations (Section 3.10.3) for each of the Site Restoration and Closure activities are discussed in the following sections.

2.10.1 Materials and Equipment

The materials used in the performance of the Site Restoration and Closure activities included the following:

- Lower Soil Placement Areas:
  - 6-mil Fire Retardant 20x100 Poly Material.
  - Silt fence.
- Drainage Swale Construction:
  - Silt fence.
  - Straw bales.
- Willow Stake Planting:

    - 500 Streamco willows.
    - 400 Pussy willows.
    - 400 Black willows.
- Vegetation:
    - Firelands "Highway Median" Lawn Seed Mixture consisting of the following:
        - Fawn Tall Fescue.
        - Perennial Ryegrass VNS.
        - Kentucky Bluegrass VNS.
    - Temporary seed consisting of the following:
        - Ryegrass
    - Hydro Mulch 2000 wood fiber with tackifier.
    - Wheat straw.

  The product information and data for the seed mixes and the mulch are provided in Appendix E with silt fence information and data also provided in Appendix E.
- Additional Riprap:
    - ODOT Type A riprap.
    - 6 oz. non-woven geotextile.

Equipment used in the performance of the Site Restoration and Closure activities included the following:

- Lower Soil Placement Areas:
    - Cat 320D excavator.
    - Cat D6 dozer.
    - Cat 725 articulated end dump.
- Drainage Swale Construction:
    - Cat 320D excavator.
    - Cat D6 dozer.
    - Various hand tools.
- Willow Stake Planting:
    - Cat 320D excavator.
    - Various hand tools.
- Vegetation:
    - Kobelco 13SR Gate Keeper mini-excavator.
    - Turf Maker hydroseeder on a dual-axle trailer.
    - Cat D6 dozer.
    - Various hand tools.
- Upper Surface Soil Placement Area stockpile testing:
    - Sample containers and cooler.
    - Stainless steel spoon.
    - Stainless steel mixing bowls.

    - Plastic gloves.
- Additional Riprap:
    - Cat 320D excavator with a claw attachment.
    - Cat 725 articulated end dump.
    - Various hand tools.

2.10.2 Construction/Installation Methods

Brown and Caldwell's CQA monitor(s) provided oversight and documentation of the Site Restoration and Closure activities as presented in Section 2.10.3 of the Certification Report. The following sections of the Certification Report provide discussions of the construction/installation methods performed for each of the Site Restoration and Closure activities.

- Lower Soil Placement Areas

  Two areas located along the toe of the Steep Slope Area (see Project Record Drawing RD-03 for location) were used to place soil material excavated from the former North and South Soil Removal Areas. This soil material was screened by the Brown and Caldwell CQA Monitor for placement in the Lower Placement Area.

    - Soil was moved/graded with the Cat D6 dozer or placed with the Cat 320D excavator from the temporary storage areas within the limits of the temporary berm to the southern Lower Soil Placement Area.
    - Soil was loaded into the Cat 725 articulated end dump trucks and transported to the northern Lower Soil Placement Area.
    - The soil in each Lower Soil Placement Area was graded up the slope with the Cat D6 dozer.
    - The 6-mil poly material was placed over the soil perpendicular to the slope. Panels were overlapped a minimum of 12-inches. Landscape staples and sand bags were placed along the panel overlaps and around the outside edges.
    - Silt fence was installed at the toe of the slope along the bottom of each Lower Soil Placement Area.
- Drainage Swale Construction

  Throughout the performance of the Phase I Remedial Action implementation activities, standing/accumulated water was present to the south and southwest of the South Access Road and location of the berm. During and following storm events, water from the storm and flooding of the Black River would increase in these areas and flow up against the South Access Road and the partially constructed berm. A drainage swale was constructed to provide a pathway for the standing/accumulated water to flow away from the South Access Road and the partially constructed berm during the winter and early spring of 2011/2012 following the winter shutdown.

    - The swale was excavated with the Cat 320D excavator between the silt fence to the south and the toe of the partially constructed berm.
        - The swale runs from the southern end of the berm to the northeast to a naturally-occurring outlet location leading to the Black River.
        - The excavated soil was placed in the temporary storage area within the limits of the temporary berm, which was placed in one of the Lower soil Placement Areas.
    - The silt fence and straw bales were installed across the outlet to control potential sediment from entering the river.

- Willow Stake Planting

  Willow stakes, approximately three feet in length, were planted along the top of the riprap riverbank stabilization adjacent to the former North Soil Removal Area.

  - An angular trench was excavated to an approximate depth of 18 inches along the top and behind the riprap.
  - The willow stakes were placed on an approximate 45° angle with six to 12 inches of the stakes extending out above the riprap material.
  - Soil from the excavation was placed on top of the willow stakes in the trench and lightly compacted with pressure from the excavator bucket.

- Vegetation

  Vegetation of the disturbed areas was performed using a temporary seed mix conducive to the climate conditions (cold temperatures and potential freezing) at the time the work was shutdown for the winter. Use of the temporary seed mix in lieu of the Steep Slope Seed Mix and permanent seeding was discussed between the U.S. EPA, Ohio EPA, the Settling Parties Site Coordinator, and Brown and Caldwell. The decision was made to use the temporary seed mix in an attempt to establish vegetation of the disturbed areas in as fast a manner as possible. The ryegrass and perennial ryegrass are considered quick germinating grasses, which are often used to establish vegetation outside of the optimum seeding periods.

  - Finish grading of the disturbed areas was performed.
  - The seed, fertilizer, and Hydro Mulch were loaded with water into the hydroseeder.
  - The hydroseeder was pulled with the Cat D6 dozer from the north end of the disturbed area (in proximity to the former North Soil Removal Area) to the south.
  - The seed/fertilizer/Hydro Mulch/water slurry was sprayed onto the disturbed ground.
  - A small area to the north of the former North Soil Removal Area was inaccessible to the hydroseeder. This area was broadcast seeded by hand and covered with wheat straw.

- Upper Surface Soil Placement Area stockpile testing:

  Samples of the soil staged in the Upper Surface Soil Placement Area were collected following the agreed upon sampling procedures presented in the Field Sampling Plan of the approved RDWP and RAWP for the Site. In accordance with the RAWP, samples were collected for laboratory analysis to determine the concentrations of the constituents of concern (COCs) in the staged soil. The analytical results were used to determine if the staged soil could remain onsite for placement under the final cover system cap during performance of the Phase II Remedial Action implementation or if the staged soil would need to be transported to an off-site licensed disposal facility permitted to accept the soil. The analytical results are discussed in Section 3.10.3 and the soil sampling procedures are presented as follows:

  - A cooler with sample containers and chain-of-custody was delivered to the Site from Test America of North Canton, Ohio.
  - Perform a QC check of the sample containers i.e. proper number, size, and preservatives, if required.
  - Calculate the approximate volume of soil in each stockpile. This determined the number of samples collected.
  - Divided the stockpiles into sections of approximately equal volume.
  - Collect discreet subsamples from the bottom third, middle third, and top third of the sections.

- Subsamples were collected from a depth greater than one foot below the surface of the stockpile and the subsamples were of equal volume.
- Subsamples for each section were combined in a stainless steel bowl and thoroughly mixed together with a clean stainless steel spoon.
- Transferred an adequate volume of the composite sample into the sample containers.
- Label and sealed the sample containers.
- Placed the sample containers in the cooler with ice for shipment to the laboratory using chain-of-custody protocols.
- Shipped the coolers to the laboratory for analysis of PCBs (EPA 8082) and/or VOCs (EPA 8260).

A representative of the Ohio EPA was present to observe the collection and preservation of the staged soil samples.

- Demobilization
  - Op-Tech disconnected the utilities and removed the office trailer, Conex box, and diesel fuel tank from the Site.
  - Op-Tech and Op-Tech's subcontractors removed equipment and ancillary items from the Site.
  - A final site walkthrough was performed on December 17, 2011 by the Brown and Caldwell CQA monitor to check the integrity of the silt fence and straw bales along the Black River floodplain and the overall cleanliness of the Site.
- Additional Riprap

  Based on observations made during visits to the Site through the winter 2011 and early spring 2012, the slope (angle) of the riprap wall constructed along the Black River as part of the former North Soil Removal Area restoration did not appear to be correct. The slope angle at the top of the riprap wall and base of the Soil Buttress determined where the Soil Buttress would intersect with the crest of the existing landfill in this area. If the slope was too flat, the Soil Buttress could potentially intersect the landfill slope below the existing crest of the landfill. If this scenario occurred, the Soil Buttress would have cut into the existing waste near the crest of the landfill, which was not part of the approved Phase II Remedial Action implementation.

  - Op-Tech mobilized personnel and equipment to the Site.
  - ODOT Type A riprap (riprap) was delivered to the Site and stockpiled.
  - Op-Tech loaded the riprap into the Cat 725 articulated end dumps with the Cat 320D excavator.
  - The Cat 725 articulated end dumps hauled all of the riprap to the top of the existing riprap wall and stockpiled the material.
  - OP-Tech removed the soil at the top of the existing riprap wall and willow stakes; these materials were placed to the side for reuse.
  - Straub Surveying, LLC (Straub) of Rocky River, Ohio field surveys the slope for the additional riprap placement.
  - The sand material present on the river bottom was moved with the Cat 320D excavator so the riprap pieces could "key" into the bedrock.
  - The Cat 320D excavator was used to pick up and place individual pieces of riprap along the face of the existing riprap wall. Each piece of riprap was manipulated with the excavator bucket to "lock" the pieces of riprap together.

- Op-Tech places the geotextile over the riprap and then places approximately 1-1/2 feet of soil on the geotextile.
- Straub returns to the Site to check the slope (angle) of the riprap, which is determined to be correct; however, a couple areas were below the proposed elevation
    - Op-Tech added additional riprap, which Straub verified to be at the correct elevation.
- Op-Tech replants the willow stakes at the top of the riprap wall.
- Op-Tech performs finish grading in the area, replaces the silt fence, and demobilizes from the Site.

2.10.3 CQA Monitoring

Brown and Caldwell's CQA monitor(s) visually observed the Site Restoration and Closure activities for workmanship and continuity. The Site Restoration and Closure activities were documented in written format using field books and forms with photographs used to provide visual documentation. Daily Field Logs providing a summary of the Site Restoration and Closure activities are provided in Appendix A with the construction photographs and descriptive photograph log provided in Appendix B. The following items were observed and documented by the Brown and Caldwell's CQA monitor during performance of the Site Restoration and Closure activities:

- Lower Soil Placement Areas
    - Verified the soil was uniformly spread up and across the slope.
    - Proper placement and overlap of the poly material panels.
    - Proper anchoring of the poly material.
    - Silt fence was properly installed and in the correct location.
- Drainage Swale Construction
    - Verified horizontal and vertical location.
    - Verified proper width and depth.
    - Verified proper installation of straw bales and silt fence.
    - Verified that the swale was free of obstructions and foreign objects following completion of construction.
- Willow Stake Planting
    - Proper trench location and depth.
    - Proper placement of the willow stakes in the trench.
    - Proper backfilling of the trench.
- Vegetation
    - The final surface of the disturbed areas were ready for vegetation.
    - Collected seed tags and fertilizer information to confirm type and quantity of materials used. Example seed tag, fertilizer, and Hydro-Mulch information is provided in Appendix K.
    - The proper quantities of seed and fertilizer were loaded with water into the hydroseeder.
    - The seed/fertilizer/water slurry was sprayed evenly across the areas to be vegetated.
    - Proper broadcast seeding and coverage with wheat straw for the small area to the north of the former North Soil Removal Area.

- Upper Surface Soil Placement Area stockpile testing:
    - Perform a QC check of the sample containers i.e. proper number, size, and preservatives, if required.
    - Verified the soil volume calculations for each stockpile.
    - Verified the proper division of the stockpiles.
    - Verified the proper sampling procedures were performed.
    - Verified the sample containers were properly labeled and sealed.
    - Verified the chain-of-custody was properly filled out, signed, and dated.
    - Verified the cooler was properly packed with containers wrapped to prevent breakage and chain-of-custody was placed in a resealable bag in the cooler.
    - Verified the cooler was properly sealed, chain-of-custody tags were in place, and the laboratory address was correct.

  The composite samples from the staged soil stockpile from the North Soil Removal Area were collected and submitted for analysis of PCBs (target limit of 50 mg/kg) on November 9, 2011 to determine if the soil needed to be disposed offsite or could remain onsite under the Upper Surface Area final cover system cap. The analytical results for the composite samples were well below the target limit of 50 mg/kg with only one sample result exceeding 1 mg/kg for PCBs. These results verified that the PCB test kits used in the soil screening for the North Soil Removal Area were overly conservative. The analytical results for the North Soil Removal Area soil stockpile samples are provided in Appendix H.

  The composite samples from the staged soil stockpile from the South Soil Removal Area were analyzed for VOCs and TCLP volatiles to determine if the soil needed to be disposed offsite or could remain onsite under the Upper Surface Area final cover system cap. The first sample was obtained on November 15, 2011, just after the soils were transported and placed in the Upper Surface Soil Placement Area. The analytical results for this sample showed a TCLP concentration of Vinyl Chloride (VC) that was slightly above the hazardous characteristic limit for VC. The staged soil stockpile was divided into four sub-piles and each sub-pile was resampled on December 13, 2011 to determine if off-site disposal was required for the entire soil stockpile. Samples collected from the four sub-piles were analyzed using the same composite sampling procedures described in Section 3.9.2 of the Certification Report.

  The analytical results for the four sub-pile composite samples were below the TCLP limit for all compounds; including VC. Based on these follow-up results, the staged soil from the South Soil Removal Area was not characteristically hazardous and was not required to be transported for off-site disposal. The analytical results for the South Soil Removal Area soil stockpile samples are provided in Appendix H.

  Representatives of the Ohio EPA were present to observe and assist with the sampling events. The analytical results for each of the sampling events were provided to the U.S. EPA and the ACOE on January 31, 2011 with confirmation of the results and disposition of the soils in the stockpiles to be left onsite received from William T. Frederick of the ACOE and Demaree Collier of the U.S. EPA in e-mails dated January 31, 2011. The staged soil stockpiles were graded in place and covered with plastic including sand bag anchors. The graded soil was covered by the Upper Surface Area final cover system cap constructed as part of the Phase II Remedial Action implementation (see Section 3.9 of the Certification Report).

- Demobilization
    - Verified utilities disconnection and removal of the office trailer, Conex box, and diesel fuel tank from the Site.

  - Observed Op-Tech and Op-Tech's subcontractors' equipment and ancillary items removal from the Site.
  - Documented the final site walkthrough performed on December 17, 2011 by the Brown and Caldwell CQA monitor to check the integrity of the silt fence and straw bales along the Black River floodplain and the overall cleanliness of the Site. No issues were identified during the walkthrough and the Phase I Remedial Action work was shutdown.

- Additional Riprap
  - Verified the thickness of the riprap wall.
  - Verified the ODOT Type A riprap as correct material.
  - Observed the soil and willow stakes removal including proper storage for reuse.
  - Observed Straub field surveying to set the slope of the additional riprap; concurrence with the field survey.
  - Verified the riprap was "keyed" into the bedrock.
  - Verified the thickness and elevation of the riprap wall.
  - Observed the placement of the geotextile over the riprap and verified the thickness of soil on the geotextile.
  - Concurs with Straub's check of the slope (angle) of the riprap.
  - Verifies placement of additional riprap in low areas and concurrence with Straub's verification of the correct elevation.
  - Observes the willow stake replanting.
  - Verified Op-Tech's performance of the finish grading, replacement of the silt fence, and demobilization from the Site.
  - Performed a final site walkthrough to check the integrity of the silt fence and straw bales along the Black River floodplain and the overall cleanliness of the Site. No issues were identified during the walkthrough.

Section 3

Phase II Construction

The Phase II construction completed the Remedial Action implementation at the Site including completion of the Sedimentation Basin and the South Access Road; both started as part of the Phase I construction (refer to Section 2 of the Certification Report). The Phase II Remedial Action Implementation included the Steep Slope Area Soil Buttress installation from the Black River flood plain to the top of the landfill slopes, re-grading of the Upper Surface Area of the Site and construction of the final cover system cap, construction of the North and South Access Roads, construction of the Ford Road Culvert Outlet Channel, and installation of groundwater monitoring wells that were abandoned during Phase I construction.

The Phase II construction was performed from May 29, 2012 to October 26, 2012 and on the following dates for performance of the following activities:

- November 13, 2012 – Planting of the willow stakes from the southern end of the riprap at the former North Soil Removal Area to the south for approximately 280 feet within the Black River floodplain.
- November 20, 2012 – Precision Paving, a subcontractor to Haynes, made repairs to the identified sections of Ford Road.
- January 7, 2013 and January 15, 2013 – Inline Fence, a subcontractor to Haynes, installed the gates and fence sections at the north and south Site access roads.

The Phase II Remedial Action implementation included the performance of the following activities:

- Quality Control (QC) Information/Testing for proposed materials.
- Contractor Mobilization.
- Site Preparation.
- Completion of the South Access Road.
- North Access Road.
- Completion of the Sedimentation Basin.
- Steep Slope Area Soil Buttress.
- Upper Surface Area Final Cover System Cap.
- Ford Road Culvert Outlet Channel.
- Site Restoration and Closure.

A discussion of the materials and equipment, construction/installation methods, CQA monitoring, and tests performed for each of the Phase II Remedial Action implementation activities is presented in the following sections of the Certification Report. Alterations/modifications from the approved Phase II construction drawings were implemented in the field and are discussed including agreements and approvals obtained from the U.S. EPA.

3.1 Phase II Alterations/Modifications

During the course of the Phase II Remedial Action implementation activities, alterations/modifications from the construction drawings were implemented in the field. The alterations/modifications were

discussed with the U.S. EPA to obtain agreement/approval before implementing the alterations/modifications in the field. These alterations/modifications are listed below, and are reflected on the Project Record Drawings included in Appendix D:

- The soil samples from the Camp Wahoo borrow source were tested for Modified Proctor. As required by the specifications, compaction testing was performed based on the Standard Proctor. Soil samples from the Camp Wahoo borrow source were tested for compaction using 95 percent of the maximum dry density as determined by the Modified Proctor. All soil samples exceeded the required standard.
- The orientation of the Sedimentation Basin principal spillway outlet apron was changed by rotating the apron check dam 45 degrees toward the flared end section. This modification will allow the discharge water to be directed toward the diversion channel that directs surface water to the Black River along the exterior slope of the Sedimentation Basin berm.
- The design required removal of trees along Ford Road for construction of the Upper Surface Area final cover system. The decision was made in consultation and agreement by the U.S. EPA, Ohio EPA, the Settling Parties Site Coordinator, and Brown and Caldwell to leave trees along Ford Road for aesthetic purposes. The Upper Surface Area final cover system design was modified to minimize the removal of trees along Ford Road.
- Extra Type D ODOT aggregate, used at the upper reach of the Ford Road Culvert Outlet Channel (Channel), was placed in the drainage channel/swale upgradient and to the west of the concrete headwall at the beginning of the Channel. This modification was made to aid in controlling potential erosion and sediment issues in this drainage channel/swale resulting from surface water flowing in the east roadside ditch along Ford Road.
- The type of fence sections and gates was changed from chain link with 3-strands of barbed wire to double bar gates and tube rail fence sections (see Appendix B for photographs of the installed fence sections and gates). This modification was proposed to, and approved by U.S. EPA. This modification was made for aesthetic purposes.
- At the request of U.S. EPA, the Army Corps of Engineers, and Ohio EPA, willow stakes were procured and planted by Brown and Caldwell from the southern end of the riprap wall at the former North Soil Removal Area to the south for approximately 280 feet within the Black River floodplain. Large rocks were also placed against the toe of the Soil Buttress in this area.

3.2 Quality Control (QC) Information/Testing

Quality Control (QC) information and testing was performed to confirm that the materials proposed for use in the construction/installation were in conformance with the specifications and the CQAP. Haynes provided the required QC information and/or laboratory test results for the proposed materials to Brown and Caldwell for review in the form of submittals. Brown and Caldwell reviewed the submittal information to check conformance of the proposed materials with the specifications and the CQAP. The submittals were returned to Haynes with one of the following four items indicated:

- No Exception Taken;
- Make Corrections Noted (Re-submittal Not Required);
- Revise and Re-Submit (Re-submittal Required); or
- Rejected – See Remarks

Once the submittals were revised and determined to be in conformance with the specifications and the CQAP, approval was provided to Haynes for the delivery of materials to the Site.

The following QC information and testing was performed by Haynes for materials used in the Phase II Remedial Action Implementation:

- Information submittals:
  - Non-woven geotextile fabric;
  - Netpave® 50 interlocking grids;
  - Corrugated metal pipe (CMP) – principal spillway;
  - Silt fence;
  - Wattle materials;
  - Flexible Growth Medium (FGM) – HP-FGM materials;
  - Chain link fence and gates;
  - Permanent seed mix;
  - Steep slope seed mix;
  - HDPE pipe; and
  - Turf Reinforcement Mat (TRM) materials.
- Information and laboratory test results submittals:
  - ODOT 304 Aggregate;
  - ODOT 411 Aggregate;
  - Riprap materials;
    - ODOT Type A – Black River riprap face;
    - ODOT Type B – Downchute channel;
    - ODOT Type C – Principal spillway riprap outlet apron; and
    - ODOT Type D – Ford Road culvert outlet channel and Sedimentation Basin rock check dams.
  - Peastone – Sedimentation Basin rock check dams and Drivable Drainage Channel;
  - Construction entrance aggregate; and
  - ODOT 57 aggregate.

Brown and Caldwell reviewed each of the submittals previously listed and determined the materials to be in conformance with the specifications and the CQAP. The results of the submittal reviews are provided in Appendix E.

3.2.1 Off-Site Borrow Soil Testing

Brown and Caldwell performed QA testing for soil samples from two potential off-site borrow sources and provided direction to Haynes for collection of soil samples from a third potential off-site borrow source. The purpose of this sampling program was to find suitable soil material for use as structural fill soil for the Soil Buttress and the Upper Surface Area final cover system cap. The soil samples for each of the three potential off-site borrow sources were transported to S&ME, formerly BBC&M, for analysis at the geotechnical laboratory either in Dublin, Ohio or in Valley View, Ohio. The samples were transported and delivered to the laboratory under chain-of-custody protocols.

The off-site borrow sources were the stockpile located behind the Metro Parks Service Maintenance Garage, Camp Wahoo, and the Grobe Fruit Farm. The sampling and laboratory analysis for each of these off-site borrow sources is discussed in the following sections.

3.2.1.1 Metro Parks Service Soil Stockpile

Brown and Caldwell collected five representative soil samples in February 2010 and one representative soil sample in December 2011, March 2012, and May 2012. The soil samples were submitted to S&ME for performance of the following geotechnical laboratory tests:

- Moisture content;
- Unified soil classification;
- Atterberg Limits;
- Sieve and hydrometer;
- Organic content;
- Standard Proctor;
- Modified Proctor; and
- Strength testing (Direct Shear).

The laboratory tests are summarized in Table 1 and the laboratory test results are provided in Appendix H.

Based on the geotechnical test results, the soil available from the Metro Parks Service Maintenance Garage stockpile was suitable for use as general fill material and in the Soil Buttress.

3.2.1.2 Camp Wahoo Borrow Source

The Camp Wahoo potential borrow source is located off of State Route 611 in Elyria, Ohio approximately eight miles west of the Site. Nineteen total representative soil samples were collected by Brown and Caldwell and delivered to Brown and Caldwell for submittal to S&ME in December 2011 (three samples), one sample in March 2012, and May 2012 (15 samples). The soil samples were submitted to S&ME for performance of the following geotechnical laboratory tests:

- Moisture content;
- Unified soil classification;
- Atterberg Limits;
- Sieve and hydrometer;
- Organic content;
- Standard Proctor;
- Modified Proctor;
- Strength testing (Direct Shear); and
- Permeability.

The laboratory tests are summarized in Table 1 and the laboratory test results are provided in Appendix M.

Based on the geotechnical test results, the soil available from Camp Wahoo was suitable for use as general fill material, the Soil Buttress, and the Upper Surface Area final cover system cap.

Three representative samples of topsoil were also collected by Haynes and delivered to Brown and Caldwell for submittal to S&ME in June 2012. The topsoil samples were submitted to S&ME for performance of the following geotechnical laboratory tests:

- Moisture content;
- Unified soil classification;
- Atterberg Limits;

- Sieve and hydrometer; and
- Organic content.
- pH.

The laboratory tests are summarized in Table 1 and the laboratory test results are provided in Appendix M.

Due to low pH test results (< 6), Topsoil from the Camp Wahoo borrow source was not suitable for use at the Site. The topsoil was obtained from the Grobe Fruit Farm borrow source.

3.2.1.3 Grobe Fruit Farm Borrow Source

The Grobe Fruit Farm potential borrow source is located off of Telegraph Road in Elyria, Ohio approximately five miles west of the Site. Six representative soil samples were collected by Haynes and delivered to Brown and Caldwell for submittal to S&ME in June 2012. The soil samples were submitted to S&ME for performance of the following geotechnical laboratory tests:

- Moisture content;
- Unified soil classification;
- Atterberg Limits;
- Sieve and hydrometer;
- Organic content;
- Standard Proctor;
- Modified Proctor;
- Strength testing (Direct Shear); and
- Permeability.

The laboratory tests are summarized in Table 1 and the laboratory test results are provided in Appendix M.

Based on the geotechnical test results, the soil available from the Grobe Fruit Farm was suitable for use as general fill material and in the Soil Buttress.

Two representative samples of topsoil were collected by Haynes and delivered to Brown and Caldwell for submittal to S&ME in June 2012. The topsoil samples were submitted to S&ME for performance of the following geotechnical laboratory tests:

- Moisture content;
- Unified soil classification;
- Atterberg Limits;
- Sieve and hydrometer; and
- Organic content.

One representative sample of topsoil was collected by Haynes and submitted to Sunrise Coop/Norwalk AG Branch on October 3, 2012 for performance of the following geotechnical laboratory tests:

- pH.

The laboratory tests are summarized in Table 1 and the laboratory test results are provided in Appendix M.

Based on the geotechnical test results, the topsoil available from the Grobe Fruit Farm was suitable for use at the Site.

3.2.1.4 Off-Site Soil and Topsoil Volumes

The volume of off-site soil and topsoil used in the Phase II Remedial Action implementation is as follows:

- Off-Site Soil:
  - Sedimentation Basin Berm: 6,530 cubic yards.
  - Steep Slope Area Soil Buttress: 77,542 cubic yards.
  - Upper Surface Area Final Cover System Cap: 24,283 cubic yards.
- Off-Site Topsoil: 3,170 cubic yards.

3.3 Contractor Mobilization

In order to take advantage of weather conditions in the Elyria area, Haynes asked permission to initiate Work for the Phase II Remedial Action implementation before the date of the Pre-Construction Meeting on June 4, 2012. Discussions with Haynes, Brown and Caldwell, Steerman Environmental Management and Consulting (Steerman Environmental), and the U.S. EPA determined non-evasive Work could be initiated before the Pre-Construction Meeting was held on June 4, 2012. The U.S. EPA approved the following Work activities:

- Mobilization of the office trailer and setting up/connection of utilities.
- Installation of fence sections and gates at the Site entrances.
- Installation of silt fence and erosion controls.
- Stockpiling of soil material for construction.
- Clearing of trees and vegetation along the steep slopes.
- Continued Work to complete the Sedimentation basin berm.

Haynes initiated Work for the following activities before the Pre-Construction Meeting:

- Haynes clearing subcontractor mobilized equipment to the Site and began tree clearing along the crest of the Steep Slope Area and chipping of the cleared material.
- Haynes mobilized the office trailer and equipment to the Site.
- Haynes constructed the northern construction entrance to provide access to the North Access Road from Ford Road as discussed in Section 3.4.2 of the Certification Report.

Brown and Caldwell provided field CQA monitoring of the Work and provided summaries of the Work to Steerman Environmental who forwarded the summaries to the U.S. EPA.

Haynes mobilized to the site on May 29, 2012 to start setting up operations to perform the Phase II Remedial Action implementation. Various types and pieces of equipment were mobilized and demobilized to and from the site throughout the performance of the Phase II Remedial Action implementation activities and this equipment is discussed in the appropriate sections of the Certification Report. The following provides a list of resources and equipment mobilized to the site to begin the Phase II Remedial Action implementation activities:

- Portable office trailer.
- 4-wheel drive, crew cab, pickup trucks.
- Portable sanitary toilet.
- Personnel.
  - Site supervisor.
  - Equipment operators.

- Laborers.

The portable sanitary toilet was serviced weekly and trash produced by the jobsite personnel was placed in trash receptacles at the Site office trailer. Only non-hazardous solid wastes were placed in the receptacles. The trash was taken by Haynes to their office in Norwalk, Ohio and placed in a dumpster supplied by Allied Waste (Republic Services, Inc.). The dumpster was emptied and the waste transported to the Lorain County II Landfill in Oberlin, Ohio (an Ohio EPA permitted solid waste facility) for off-site disposal.

3.4 Site Preparation

Site preparation activities included the following:

- Erosion and Sediment Control.
- Temporary Construction Entrances.
- Site Clearing and Grubbing.

3.4.1 Erosion and Sediment Control

Erosion and sediment control for the Site included silt fence and straw bales installed at the limits of disturbance and along the Black River floodplain. Haynes was responsible for maintenance of the new and existing erosion and sediment controls throughout the Phase II Remedial Action implementation.

Brown and Caldwell prepared a Storm Water Pollution Prevention Plan (SWP3) for the Site under the requirements of Ohio EPA Permit No. OHC000003 – Authorization for Storm Water Discharges Associated with Construction Activity under the National Pollutant Discharge Elimination System (NPDES). The erosion and sediment control structures were provided and installed following the provisions of the Ohio Department of Natural Resources (ODNR), Division of Soil and Water Conservation, *Rainwater and Land Development – Ohio's Standards for Stormwater Management, Land Development, and Urban Stream Protection*, Third Edition 2006. An erosion and sediment inspection was performed at least weekly and following storm events.

Brown and Caldwell's CQA Monitor(s) performed field oversight to document the materials, equipment, construction/installation methods, and CQA monitoring for the erosion and sediment control structures installation. The following sections of the Certification Report provide a summary of the written documentation for the materials and equipment (Section 3.3.1.1), construction/installation methods (Section 3.3.1.2), and CQA monitoring (Section 3.3.1.3) performed during installation of the erosion and sediment control structures. Photographic documentation is provided in Appendix B. Information, data, and test results for the QC requirements for materials and installation methods is provided in appendices as noted within each section of the erosion and sediment control discussion.

3.4.1.1 Materials and Equipment

The erosion and sediment control materials installed at the Site included the following:

- Silt fence - LS 125 Fabric, 30-inch x 100-foot rolls; 1-1/2" x 1-1/2" x 36" (nominal) oak stakes on 10-foot centers.

Product information for the silt fence material is provided in Appendix E.

Equipment used for the silt fence installation included the following:

- Kobelco 235 SRLC Excavator.
- Various hand tools.

3.4.1.2 Construction/Installation Methods

Haynes maintained the silt fence from the Phase I Remedial Action implementation and, if required, replaced, the silt fence sections and straw bales.

The following methods were used to install/replace the silt fence:

- Excavated a minimum six-inch deep anchor trench.
- Unrolled silt fence panels and placed the silt fence, with the posts on the downslope side of the fabric, in the trench, leaving at least 16 inches of silt fence material above the original ground surface.
- Pulled the stakes tight and pounded the stakes into the ground at the backside of the trench.
- Seams between silt fence panels were overlapped a minimum of six inches and the end posts of each panel were wrapped together before the stakes were pounded into the ground.
- Backfilled the trench with the excavated soil.

3.4.1.3 CQA Monitoring

Brown and Caldwell's CQA monitor visually observed the construction/installation of the erosion and sediment control structures for workmanship and continuity. The construction/installation activities were documented in written format using field books and forms with photographs used to provide visual documentation. Daily Field Logs providing a summary of the erosion and sediment control structures installation are provided in Appendix A with the installation photographs and descriptive photograph log provided in Appendix B. The following items were observed and documented by the Brown and Caldwell's CQA monitor during installation of the erosion and sediment control structures:

- Proper location and anchor trench depth.
- Placement of the silt fence in the anchor trench.
- Proper height of silt fence above the original ground surface.
- No sagging of the silt fence fabric between stakes.
- Proper overlap between seams of silt fence panels.
- Proper backfilling of the anchor trench.

The Brown and Caldwell CQA Monitor performed the soil erosion and sedimentation control inspections weekly and within 24 hours of storm events. Copies of the soil erosion and sedimentation control inspection forms are provided in Appendix F.

3.4.2 Temporary Construction Entrances

Temporary construction entrances provided a smooth transition from the Ford Road pavement and aided in reducing the mud tracked off the Site. The temporary construction entrances were located at the beginning of the North and South Access Roads. The temporary construction entrance installed for Phase I Remedial Action implementation served as the south temporary construction entrance for Phase II Remedial Action implementation. The north temporary construction entrance was constructed as part of the Phase II Remedial Action implementation. Haynes maintained the temporary construction entrances throughout the Phase II Remedial Action implementation.

Brown and Caldwell's CQA Monitor(s) performed field oversight to document the materials, equipment, construction/installation methods, and CQA monitoring for the temporary construction entrances. The following sections of the Certification Report provide a summary of the written documentation for the materials and equipment (Section 3.3.2.1), construction/installation methods (Section 3.3.2.2), and CQA monitoring (Section 3.3.2.3) performed during installation of the temporary construction entrances. Photographic documentation is provided in Appendix B. Information, data, and test results for the QC

requirements for materials and installation methods is provided in appendices as noted within each section of the temporary construction entrances discussion.

3.4.2.1 Materials and Equipment

The materials used to construct the north temporary construction entrance included the following:

- 2-inch to 4-inch stone.
- 12-inch diameter steel culvert pipe.

The temporary construction entrance was constructed using the following equipment:

- John Deere 750J dozer.
- Kobelco 235 SRLC excavator.
- Cat 714 articulated end dump.
- Various hand tools.

3.4.2.2 Construction/Installation Methods

The following activities were performed for the installation of the north temporary construction entrance:

- The stone and pipe were delivered to the Site.
- Haynes used straps to lift and place the pipe with the Kobelco 235 SRLC excavator.
- Haynes loaded the stone into the Cat 714 articulated end dump with the Kobelco 235 SRLC excavator.
- The Cat 714 articulated end dump hauled the stone to the temporary construction entrance and dumped the stone.
- The stone was pushed in place and graded using the John Deere 750J dozer.

Haynes kept a stockpile of the 2-inch to 4-inch stone onsite for use in maintaining the surface of the construction entrances throughout the Phase II Remedial Action implementation.

3.4.2.3 CQA Monitoring

Brown and Caldwell's CQA monitor visually observed the installation of the temporary construction entrances for workmanship and continuity. The construction/installation activities were documented in written format using field books and forms with photographs used to provide visual documentation. Daily Field Logs providing a summary of the installation of the temporary construction entrance are provided in Appendix A with the installation photographs and descriptive photograph log provided in Appendix B. The following items were observed and documented by the Brown and Caldwell's CQA monitor during installation of the temporary construction entrance:

- Condition of the culvert pipe and proper stone size.
- Proper horizontal and vertical location of the culvert pipe.
- Proper length, width, and thickness of the construction entrance.
- Proper grading to promote surface water drainage.

The Brown and Caldwell's CQA monitor monitored the condition of the construction entrances and requested Haynes to periodically place and grade additional 2-inchto 4-inch stone for maintenance of the temporary construction entrances.

3.4.3 Site Clearing and Grubbing

Following installation of the erosion and sediment controls, H&H Land Clearing of Middlefield, Ohio performed site clearing and grubbing activities. Site clearing and grubbing included the removal of

ground cover, brush, trees, the grinding of stumps, and the chipping and off-site removal of the cleared materials. The materials were transported to Kurtz Brothers Recycling in Avon, Ohio for recycling.

Brown and Caldwell's CQA Monitor(s) performed field oversight to document the materials, equipment, construction/installation methods, and CQA monitoring for the clearing and grubbing activities. The following sections of the Certification Report provide a summary of the written documentation for the equipment (Section 3.3.3.1), construction/installation methods (Section 3.3.3.2), and CQA monitoring (Section 3.3.3.3) performed for the clearing and grubbing activities. Photographic documentation is provided in Appendix B.

3.4.3.1 Equipment

Site clearing and grubbing was performed using the following equipment:

- Komatsu 228LC excavator with a grapple hook attachment.
- Morbark 3800 Wood Hog grinder.
- John Deere 648E skidder.
- Komatsu 430FX excavator with a Quadco felling head attachment.
- Various hand tools.

3.4.3.2 Construction/Installation Methods

The following activities were performed for clearing and grubbing:

- Upper Surface Area:
  - Removed designated trees and shrubs and other forms of vegetation.
    - Tree trunks, branches, and limbs were transported to and staged in the Upper Surface Area for chipping.
  - Sod, grass, weeds, and other forms of surface vegetation was removed as part of the topsoil stripping activity discussed in Section 3.9.2.3.
  - Stump grubbing was performed by grinding the stumps to within 2-3 inches of the adjacent ground surface.
  - Chipped tree trunks, branches, limbs, and underbrush.
  - Removed chipped material from the Site.
- Steep Slope Area:
  - Removed designated trees and shrubs and other forms of vegetation.
    - Tree trunks, branches, and limbs were transported to and staged in the Upper Surface Area for chipping.
  - Surface vegetation, sod, grass, weeds, etc., were not removed.
  - Stump grubbing was performed by grinding the stumps to within 2-3 inches of the adjacent ground surface.
  - Chipped tree trunks, branches, limbs, and underbrush.
  - Removed chipped material from the Site.

3.4.3.3 CQA Monitoring

Brown and Caldwell's CQA monitor visually observed the site clearing and grubbing activities for workmanship and continuity. The site clearing and grubbing activities were documented in written format using field books and forms with photographs used to provide visual documentation. Daily Field Logs

providing a summary of the site clearing and grubbing activities are provided in Appendix A with the photographs and descriptive photograph log provided in Appendix B. The following items were observed and documented by the Brown and Caldwell's CQA monitor for the site clearing and grubbing activities:

- Removal of trees designated for removal.
- Chipping of tree trunks, branches, and limbs and off-site removal of the chipped material.
- Stump grinding to the appropriate height.

3.5 South Access Road

The South Access Road was partially constructed during the Phase I Remedial Action implementation. To complete the South Access Road, Haynes constructed the section of the South Access Road that runs along the top of the Sedimentation Basin berm. The South Access Road terminates at the northern end of the Sedimentation Basin in conjunction with the southern end of the Drivable Drainage Channel.

Brown and Caldwell's CQA Monitor(s) performed field oversight to document the materials, equipment, construction/installation methods, and CQA monitoring for the South Access Road construction. The following sections of the Certification Report provide a summary of the written documentation for the materials and equipment (Section 3.4.1), construction/installation methods (Section 3.4.2), and CQA monitoring (Section 3.4.3) performed for the South Access Road construction.

3.5.1 Materials and Equipment

The materials used in the construction of the South Access Road included the following:

- 8 oz. non-woven geotextile.
- ODOT 304 aggregate subbase material.
- ODOT 411 stabilized crushed aggregate surface material.

The South Access Road was constructed using the following equipment:

- John Deere 750J dozer.
- Kobelco 235 SRLC excavator.
- Cat 714 articulated end dump.
- Ingersoll Rand SD100D vibratory smooth drum roller.
- Various hand tools.

3.5.2 Construction/Installation Methods

The following activities were performed for the construction of the South Access Road:

- 8 oz. non-woven geotextile, ODOT 304 aggregate, and ODOT 411 aggregate were delivered to the Site.
- Haynes placed 8 oz. non-woven geotextile on the top surface of the South Access Road constructed as part of the Sedimentation Basin berm (see Section 3.6 of the Certification Report). The geotextile was 15 feet wide placed with seams perpendicular to the centerline of the road. The seams were overlapped a minimum of six inches and were shingled such that the down gradient seam was placed under the up gradient seam.
- Subbase material:
    - Haynes loaded ODOT 304 aggregate into the Cat 714 articulated end dump with the Kobelco 235 SRLC excavator.
    - The Cat 714 articulated end dump hauled the aggregate to the South Access Road working area.

  - The John Deere 750J dozer pushed the aggregate in place onto the geotextile and graded the aggregate to the required six-inch thickness.
- Surface material:
  - Haynes then loaded ODOT 411 aggregate into the Cat 714 articulated end dump with the Kobelco 235 SRLC excavator.
  - The Cat 714 articulated end dump hauled the aggregate to the South Access Road working area.
  - The John Deere 750J dozer pushed the aggregate in place onto the ODOT 304 aggregate subbase and graded the aggregate to the required six-inch thickness.
  - The aggregate was rolled with the Ingersoll Rand SD100D vibratory smooth drum roller making a minimum of four passes.

3.5.3 CQA Monitoring

Brown and Caldwell's CQA monitor visually observed the South Access Road construction for workmanship and continuity. The South Access Road construction was documented in written format using field books and forms with photographs used to provide visual documentation. Daily Field Logs providing a summary of the South Access Road construction are provided in Appendix A with the photographs and descriptive photograph log provided in Appendix B. The following items were observed and documented by the Brown and Caldwell's CQA monitor for the South Access Road construction:

- Proper placement, alignment, and overlap of the geotextile.
- Observed that equipment did not come in direct contact with the geotextile.
- Monitored the ODOT 304 aggregate placement for movement and/or wrinkles in the underlying geotextile.
- Proper width and thickness of the aggregates.
- Verified that the minimum number of four passes of the Ingersoll Rand SD100D vibratory smooth drum roller.

3.6 North Access Road

The North Access Road was constructed from the end of the north temporary construction entrance and terminated at the north end of the Drivable Drainage Channel.

Brown and Caldwell's CQA Monitor(s) performed field oversight to document the materials, equipment, construction/installation methods, and CQA monitoring for the North Access Road construction. The following sections of the Certification Report provide a summary of the written documentation for the materials and equipment (Section 3.5.1), construction/installation methods (Section 3.5.2), and CQA monitoring (Section 3.5.3) performed for the North Access Road construction.

3.6.1 Materials and Equipment

The materials used in the construction of the North Access Road included the following:

- 8 oz. non-woven geotextile.
- ODOT 304 aggregate subbase material.
- ODOT 411 stabilized crushed aggregate surface material.

The North Access Road was constructed using the following equipment:

- John Deere 750J dozer.
- Kobelco 235 SRLC excavator.

- Cat 714 articulated end dump
- Ingersoll Rand SD100D vibratory smooth drum roller.
- Various hand tools.

3.6.2 Construction/Installation Methods

The following activities were performed for the construction of the North Access Road:

- 8 oz. non-woven geotextile, ODOT 304 aggregate, and ODOT 411 aggregate were delivered to the Site.
- Haynes placed 8 oz. non-woven geotextile on the top surface of the North Access Road constructed as part of the Soil Buttress (see Section 3.7 of the Certification Report). The geotextile was 15 feet wide placed with seams perpendicular to the centerline of the road. The seams were overlapped a minimum of six inches and were shingled such that the down gradient seam was placed under the up gradient seam.
- Subbase material:
    - Haynes loaded ODOT 304 aggregate into the Cat 714 articulated end dump with the Kobelco 235 SRLC excavator.
    - The Cat 714 articulated end dump hauled the aggregate to the North Access Road working area.
    - The John Deere 750J dozer pushed the aggregate in place onto the geotextile and graded the aggregate to the required six-inch thickness.
- Surface material:
    - Haynes then loaded ODOT 411 aggregate into the Cat 714 articulated end dump with the Kobelco 235 SRLC excavator.
    - The Cat 714 articulated end dump hauled the aggregate to the North Access Road working area.
    - The John Deere 750J dozer pushed the aggregate in place onto the ODOT 304 aggregate subbase and graded the aggregate to the required six-inch thickness.
    - The aggregate was rolled with the Ingersoll Rand SD100D vibratory smooth drum roller making a minimum of four passes.

3.6.3 CQA Monitoring

Brown and Caldwell's CQA monitor visually observed the North Access Road construction for workmanship and continuity. The North Access Road construction was documented in written format using field books and forms with photographs used to provide visual documentation. Daily Field Logs providing a summary of the North Access Road construction are provided in Appendix A with the photographs and descriptive photograph log provided in Appendix B. The following items were observed and documented by the Brown and Caldwell's CQA monitor for the North Access Road construction:

- Proper placement, alignment, and overlap of the geotextile.
- Observed that equipment did not come in direct contact with the geotextile.
- Monitored the ODOT 304 aggregate placement for movement and/or wrinkles in the underlying geotextile.
- Proper width and thickness of the aggregates.
- Verified that the minimum number of four passes of the Ingersoll Rand SD100D vibratory smooth drum roller.

3.7 Sedimentation Basin

The Sedimentation Basin construction included the construction of the berm including the emergency spillway and the installation of the principal spillway. Part of the Sedimentation Basin berm was constructed during the Phase I Remedial Action implementation. Soil material within the area of the Sedimentation Basin was bladed and graded to shape the berm to provide a temporary area for controlling surface water runoff from the areas disturbed during the Phase I Remedial Action implementation. The Sedimentation Basin construction was completed as part of the Phase II Remedial Action implementation.

Based on settlement of the berm that was constructed as part of the Phase I Remedial Action implementation, four test pits were excavated in the berm material down to the former existing ground surface. The results of the test pits determined the soil material to consist mostly of silts and clays (former floodplain soils, sediments, and debris) with pieces of wood i.e. tree branches, roots, etc. With exception for the southernmost 50 linear feet of berm, a decision was made to remove this material down to the former existing ground surface due to the apparent low strength of this material and the presence of pieces of wood and large rocks. The removed material was placed at the toe of the existing Steep Slope area, spread out along the slope, and covered by the construction of the Steep Slope Area Soil Buttress as discussed in Section 3.6.2 of the Report.

Brown and Caldwell's CQA Monitor(s) performed field oversight to document the materials, equipment, construction/installation methods, and CQA monitoring for the Sedimentation Basin construction. The following sections of the Certification Report provide a summary of the written documentation for the materials and equipment (Section 3.6.1), construction/installation methods (Section 3.6.2), CQA monitoring (Section 3.6.3), and tests (Section 3.6.4) performed for the Sedimentation Basin construction.

3.7.1 Materials and Equipment

The materials used in the construction of the Sedimentation Basin included the following:

- Berm:
  - Soil material from the borrow source located behind the Metro Parks Maintenance Garage on Ford Road.
- Emergency spillway:
  - Geosynthetic Turf Reinforcement Mat (TRM) Enkamat® 7020 with Flexible Growth Medium (FGM) Flexterra® HP-FGM™ infill.
- Principal spillway:
  - 24-inch diameter corrugated metal pipe (CMP) riser with seven rows of 3-inch diameter orifices.
  - 30-inch diameter CMP anti-vortex device/track rack.
  - 12-inch diameter CMP outlet pipe with flared-end outlet structure.
  - 8 oz. non-woven geotextile.
  - ODOT Type C riprap material.
  - Concrete.

The Sedimentation Basin was constructed using the following equipment:

- John Deere 750J dozer.
- Kobelco 235 SRLC excavator.
- Cat 714 articulated end dump.

- Cat 815B sheepsfoot compactor.
- Various hand tools.

3.7.2 Construction/Installation Methods

The following activities were performed for the construction of the Sedimentation Basin:

- Berm:

  The partial berm constructed during the Phase I remedial Action implementation was removed down to the former existing ground surface due to the apparent low strength of this material and the presence of pieces of wood and large rocks. The following methods were used to remove the existing berm:

  - The berm material was excavated with the Kobelco 235 SRLC excavator and placed in the Cat 714 articulated end dump.
  - The Cat 714 articulated end dump transported the soil material to the toe of the Steep Slope Area.
  - The soil material was spread up the slope with the John Deere 750J dozer where the soil material would be covered as the Soil Buttress was constructed.

  The berm was constructed with off-site soil material possessing adequate strength and compaction characteristics as follows:

  The off-site soil material was obtained from the Metro Parks soil stockpile.

  The off-site soil material passed the laboratory QC testing requirements (see Section 3.1) and the Quality Assurance (QA) testing requirements as discussed in Section 3.6.4. The following construction methods were performed for the off-site soil placement:

  - Haynes excavated the soil material and loaded the excavated soil in the 12-15-yd end dump highway trucks.
  - The trucks hauled the soil from the borrow areas to the Site.
  - Haynes' site supervisor or the compactor operator directed the trucks where to dump each load.
  - The soil was graded to a maximum eight-inch thick loose lifts with the John Deere 750J dozer.
    - The thickness of each lift was controlled by GPS.
    - The Brown and Caldwell CQA monitor(s) visually observed the graded soil for the presence of organic material, large rocks, roots, and other debris/foreign material. This material was removed from the soil.
  - After each lift was graded, the lift was compacted using a Cat 815B sheepsfoot compactor making a minimum of five passes over the lift.
  - At the end of each workday, the surface of the top lift was sealed.
  - The top lift surface was scarified before additional soil was placed at the beginning of each workday.
- Emergency spillway:
  - Haynes cut (excavated) the emergency spillway from the completed berm using the John Deere 750J dozer.

- C J Zak Company, Inc. (Zak) from Richfield, Ohio installed the TRM and FGM/seed/fertilizer/water slurry infill.
    - A trench for placement of the outer edges and ends of the TRM was hand excavated.
    - The TRM sections were rolled out through the spillway sides and bottom and anchored in the outer edge trenches and on each end. Staples/anchor pins were inserted 8 inches from the panel edges and on 12 inch spacing across the width of the panels and at the panel end overlaps.
    - The TRM was infilled with the FGM/seed/fertilizer/water slurry using a truck-mounted hydroseeder.

- Principal spillway:
    - Haynes excavated the trench through the berm for installation of the outlet pipe using the Kobelco 235 SRLC excavator.
    - The outlet pipe was laid in the trench and backfilled and compacted up to the elevation of the top of the berm.
    - The outlet pipe and flared outlet section were connected.
    - Haynes excavated the riser pipe concrete base.
    - Haynes formed the concrete base.
    - The riser was set in place and connected to the outlet pipe.
    - Haynes poured the concrete base around the riser.
    - The 8 oz. non-woven geotextile was placed at the end of the flared outlet section to form the riprap outlet apron.
    - The ODOT Type C riprap material was placed to install the riprap apron.

3.7.3 CQA Monitoring

Brown and Caldwell's CQA monitor visually observed the Sedimentation Basin construction for workmanship and continuity. The Sedimentation Basin construction was documented in written format using field books and forms with photographs used to provide visual documentation. Daily Field Logs providing a summary of the Sedimentation Basin construction are provided in Appendix A with the photographs and descriptive photograph log provided in Appendix B. The following items were observed and documented by the Brown and Caldwell's CQA monitor for the Sedimentation Basin construction:

- Berm Removal:
    - Verified removal of the existing soil material down to the former existing ground surface.
    - Placement of the soil material at the toe of the Steep Slope Area.
    - Verified the soil material was graded up the slope.
- Berm Construction:
    - The subbase of the berm was properly scarified for placement of the first soil lift.
    - The presence of large rocks, roots, debris, foreign materials, etc. in the soil material. These types of items, when observed, were removed from the soil material.
    - Visually observed the placement and uniformity of the lifts to a maximum uncompacted thickness of eight-inches.

  - Verified the performance of adequate number of passes (minimum of five passes) with the sheepsfoot compactor.
  - Verified that the last lift placed each day was sealed at the end of each workday to preserve the integrity of that lift and promote surface water runoff in the event of a storm.
  - Verified that the surface of the each lift was scarified prior to placement of the next lift.
  - Performed In-place density testing using a nuclear density gauge to verify acceptance of compaction of each lift as discussed in Section 3.6.4 of the Certification Report.
- Emergency spillway:
  - Verified the excavation was to the dimensions, lines, and grades.
  - Proper anchor trench construction.
  - Proper TRM placement, overlap, and anchoring.
  - Proper staples/anchor pins spacing and installation.
  - Proper FGM/seed/fertilizer/water slurry infill of the TRM.
- Principal spillway:
  - The riser and culvert pipe and anti-vortex device/trash rack were visually observed for conformance with the construction drawings, as well as to verify there were no signs of damage. The riser and culvert pipe and anti-vortex device/trash rack were determined to be in conformance with the construction drawings and no visual damage was observed.
  - Proper assembly of the riser pipe and anti-vortex device/trash rack and outlet pipe flared outlet section.
  - Riser pipe concrete base excavated to the proper lines and grades.
  - Proper forming of concrete base.
  - Adequate curing of the poured concrete rise pipe anchor base.
  - Trench excavation for the principal spillway to the required lines and grades.
  - Proper placement of the outlet pipe and trench backfill and compaction up to the elevation of the top of the berm.
- Observe the ground surface for unacceptable protrusions (e.g., rocks, sticks, etc.) before geotextile placement was initiated.
- Proper geotextile placement.
  - Adjacent geotextile panels were overlapped per manufacturer's recommendations.
  - Geotextile placement occurred in such a manner as to minimize wrinkling and to prevent crimping, scratching, and tearing of the geotextile.
- Observed the placement and uniformity of the ODOT Type C riprap material.

3.7.4 Quality Assurance (QA) Testing

Field QA testing was performed for the off-site soil materials used to construct the Sedimentation Basin berm. The minimum compaction specification for the off-site soil material was as follows:

- 95 percent of the maximum dry density with moisture content ±3% of optimum as determined by the Standard Proctor.

The Brown and Caldwell CQA monitor(s) performed the in-situ moisture/density testing using a nuclear density gauge for at least two tests per lift per acre in accordance with the CQAP prior to acceptance of the lift by the Brown and Caldwell CQA monitor(s). A total of 16 in-situ moisture/density tests were

performed during the construction of the Sedimentation Basin berm. The in-situ moisture/density test locations and results are provided in Appendix G.

3.8 Steep Slope Area Soil Buttress

Due to the frequency of storm events and the amount of rain that occurred throughout the performance of the Phase I Remedial Action implementation, the project schedule was extended from the original anticipated construction completion date of October 31, 2011 to December 17, 2011. The rain caused construction related issues such as shutdowns due to limited or no access to the work area(s), difficult and unsafe working conditions i.e. wet soil material caused equipment to slip/slide and creation of large ruts in areas being backfilled and soil placement areas causing continual re-working of soil material, and river flooding with river water flowing through the construction area.

Based on the weather (primarily the frequency and amount of rainfall) and the time of year (mid-December 2011), a decision was made to delay construction of the Steep Slope Area Soil Buttress (Soil Buttress) from the river plain of the Black River up to elevation 612 feet msl until the next construction season (Spring/Summer/Fall of 2012). The construction of the Soil Buttress was performed as part of the Phase II Remedial Action work.

The Steep Slope Area construction activities associated with the Phase II Remedial Action implementation included the construction of the Soil Buttress from the river plain of the Black River up to elevation 612 feet msl. Construction of this portion of the Soil Buttress would take the Soil Buttress above the 100-year flood elevation for the Black River; thus minimizing, if not eliminating, the affects of the river flooding resulting from storm events up river and at the Site. The Soil Buttress construction/installation included the following components:

- Seep Drain Installation.
- Off-Site Soil and Topsoil Material.
- Riprap Extension.
- Surface Water Diversion Channels.
- Drivable Drainage Channel.
- Downchute channel.

Brown and Caldwell's CQA Monitor(s) performed field oversight to document the materials, equipment, construction/installation methods, and CQA monitoring and tests performed for the Soil Buttress construction. The following sections of the Certification Report provide a summary of the written documentation for the materials and equipment (Section 3.7.1), construction/installation methods (Section 3.7.2), CQA monitoring (Section 3.7.3), and tests (Section 3.7.4) performed during construction of the Soil Buttress. Photographic documentation is provided in Appendix B. Information, data, and test results for the QC and QA requirements for materials and construction methods are provided in appendices as noted within each section of the Soil Buttress discussion.

3.8.1 Materials and Equipment

The materials used in the construction of the Soil Buttress included the following:

- Seep drains:
    - 4-inch diameter SDR 17 high density polyethylene (HDPE) pipe with two, 3/8-inch diameter perforations located 120° apart on 6-inch spacing.
    - No. 57 aggregate.
    - Polyvinyl chloride (PVC) check valves.

    - HDPE elbows, fittings, and appurtenances.
- Off-site soil obtained from the following approved sources:
    - Metro Parks Service soil stockpile.
    - Camp Wahoo.
    - Grobe Fruit Farm.

  Each of these off-site soil borrow sources was approved through quality control testing as discussed in Section 3.1 of the Certification Report.
- Off-site topsoil obtained from the following approved sources:
    - Metro Parks Service soil stockpile.
    - Camp Wahoo.
    - Grobe Fruit Farm.

  Each of these off-site topsoil borrow sources was approved through quality control testing as discussed in Section 3.1 of the Certification Report.
- Riprap extension:
    - ODOT Type A Riprap material.
- Surface water diversion channels:
    - Geosynthetic Turf Reinforcement Mat (TRM) Enkamat® 7020 with Flexible Growth Medium (FGM) Flexterra® HP-FGM™ infill.
- Drivable drainage channel:
    - 4 oz. non-woven geotextile.
    - No. 57 aggregate.
    - No. 8 aggregate.
    - Netpave® 50 interlocking grids.
    - Topsoil.
    - Flexible Growth Medium (FGM) Flexterra® HP-FGM™.
- Downchute channel:
    - Geosynthetic Turf Reinforcement Mat (TRM) Enkamat® 7020 with Flexible Growth Medium (FGM) Flexterra® HP-FGM™ infill.
    - 8 oz. non-woven geotextile.
    - ODOT Type B riprap material.

Submittals for each of the materials previously listed are discussed in Section 3.1.of the Certification Report with copies of the submittals provided in Appendix E.

Equipment used for the Soil Buttress construction included the following:

- Seep drains:
    - Kobelco 235 SRLC excavator.
    - John Deere 304J endloader.
    - McElroy No. 14 butt-fusion welder.
    - Various hand tools.
- Soil and Topsoil Placement:

  - Cat D6R dozer.
  - John Deere 750J dozers; one with a GPS attachment.
  - John Deere 762B scrapers.
  - John Deere 862 scraper.
  - Case IH MX 255 tractor with box scraper.
  - Cat 815B sheepsfoot compactor.
  - Cat 714 articulated end dumps.
  - Kobelco 235 SRLC excavator.
  - Water truck.
  - Lay-Mor 8B sweeper.
  - Various hand tools.
- Riprap extension:
  - Kobelco 235 SRLC excavator.
  - Cat 714 articulated end dump.
- Surface water diversion channels:
  - John Deere 750J dozer with a GPS attachment.
  - Case RT60 Trencher.
  - Various hand tools.
- Drivable drainage channel:
  - John Deere 750J dozer with a GPS attachment.
  - Kobelco 235 SRLC excavator.
  - Cat 714 articulated end dumps.
  - John Deere 304J endloader.
  - Various hand tools.
- Downchute channel:
  - John Deere 750J dozer with a GPS attachment.
  - Kobelco 235 SRLC excavator.
  - Case RT60 Trencher.
  - Various hand tools.

3.8.2 Construction/Installation Methods

Haynes performed the Soil Buttress construction. Brown and Caldwell's CQA monitor provided oversight and documentation of the Soil Buttress construction activities as presented in Section 3.10.3 of the Certification Report. The following sections of the Certification Report provide discussions of the construction/installation methods performed for each of the Soil Buttress components.

3.8.2.1 Seep Drains Installation

During the Phase I Remedial Action implementation, several minor seeps were identified discharging from the toe of the landfill slope. While it is expected that construction of the Soil Buttress will eliminate the seeps, a horizontal drain system was discussed with, and proposed to, the U.S. EPA and the ACOE as

a precautionary measure for the build-up of water behind the Soil Buttress. The installation of the horizontal drain system (seep drains) was added to the Phase II Remedial Action implementation with the design drawings and specification included in the bid package.

The seep drains were installed along the toe of the Steep Slope Area for the purpose of intercepting the discharge from seeps that had appeared during the performance of the Phase I Remedial Action implementation. Seeps were identified in the proximity of the former North Soil Removal Area and one seep was identified approximately half way between the two Phase I onsite Lower Soil Placement Areas. The seep drains were installed to collect and direct any potential water from the north Steep Slope Area toe and the south Steep Slope Area toe toward the northern end of the Sedimentation Basin. Air traps were installed in each seep drain at intervals along the length of each drain. Construction/installation methods performed for the seep drains included the following:

- The HDPE pipe and ODOT 57 aggregate was delivered to the site and stored in a clean area.
- The 4-inch HDPE pipe was butt-fusion welded on-site by Haynes and set aside for later use.
- The excavator was used to excavate the trenches for the seep drains.
    - Excavated soil was placed on the Steep Slope Area toe side of the excavation; this excavated soil was covered during construction of the Soil Buttress.
- The ODOT. 57 aggregate was placed in the trench for pipe bedding approximately 3-inch in thickness following completion of the excavation.
- The HDPE pipe was placed in the trenches and backfilled with the No. 57 aggregate to the top of the trench level with the adjacent ground surface.
    - Haynes used GPS equipment to check the grade of the pipe.

Haynes constructed 840 linear feet for the North Seep Drain with air traps installed 280 and 560 feet from the outlet end at the Sedimentation Basin and 400 linear feet for the South Seep Drain with an air trap installed 200 feet from the outlet end at the Sedimentation Basin. A PVC check valve was installed on the outlet pipe for each of the seep drains. The seep drain construction was completed on June 19, 2013 and as of December 4, 2013, no seeps had been observed.

3.8.2.2 Placement of Off-Site Soils

The off-site soil material was obtained from the following sources:

- Metro Parks Service soil stockpile.
- Grobe Fruit Farm.

The off-site soil material passed the laboratory QC testing requirements (see Section 3.1) and the Quality Assurance (QA) testing requirements as discussed in Section 3.10.4. The following construction methods were performed for the off-site soil placement:

- KS Associates, Inc. (KS Associates) of Elyria, Ohio performed construction stakeout of the Soil Buttress.
- Haynes excavated the soil material at the borrow area and loaded the excavated soil in the 12-15-yd end dump highway trucks.
- The trucks hauled the soil from the borrow areas to the Site.
- Haynes' site supervisor or the compactor operator directed the trucks where to dump each load.
    - Truck traffic entered the Site at the north construction entrance, traveled across the fill to the active fill area, and exited the Site at the south construction entrance.
- The soil was graded to a maximum 8-inch thick loose lift with the Cat 815B sheepsfoot compactor or the John Deere 750J dozer.

  - The thickness of each lift was controlled by GPS equipment.
  - The Brown and Caldwell CQA monitor(s) visually observed the graded soil for the presence of organic material, large rocks, roots, and other debris/foreign material. This material was removed from the soil.
- After each lift was graded, the lift was compacted using a Cat 815B sheepsfoot compactor making a minimum of five passes over the lift.
- At the end of each workday, the surface of the top lift was sealed.
- The top lift surface was scarified before additional soil was placed at the beginning of each workday.

As the Soil Buttress construction neared the crest of the fill, Haynes made the following changes to the construction methods:

- Haynes' site supervisor or the dozer operator directed the trucks where to dump each load of soil on the Upper Surface Area.
- Self-loading scrapers picked up the soil and transported the soil to the active lift as directed by Haynes' site supervisor or the compactor operator.

This change in construction method was required due to the decreasing width of the working fill bench as the Soil Buttress progressed up the slope to the crest. The scrapers were able to work and maneuver more efficiently and safely on the smaller width working fill bench.

3.8.2.3 Placement of Off-Site Topsoil

The off-site topsoil material was obtained from the following sources:

- Metro Parks Service soil stockpile.
- Grobe Fruit Farm.

Laboratory QC testing demonstrated that off-site topsoil material met, or exceeded, the required specifications. (see Section 3.1). The following construction methods were performed for the off-site topsoil placement:

- Haynes segregated the topsoil material into stockpiles at each of the borrow sources then loaded the topsoil in the 12-15-yd end dump highway trucks.
- The trucks hauled the topsoil from the borrow areas to the Site.
- Haynes' site supervisor directed the trucks where to dump each load.
- The off-site topsoil was placed in stockpiles at the Upper Surface Area and loaded in the articulated end dumps or picked up by the scrapers for transport to the topsoil placement area.
- Topsoil placement – Soil Buttress:
  - Topsoil was transported to the active placement area and dumped along the Steep Slope Area side of the North Access Road, Drivable Drainage Channel, Sedimentation Basin, and South Access Road.
  - The dozer pushed the topsoil up the slope from the toe to the crest.
  - The thickness of the topsoil was controlled by GPS equipment.
  - The Brown and Caldwell CQA monitor(s) visually observed the graded topsoil for the presence of organic material, large rocks, roots, and other debris/foreign material. This material was removed from the topsoil.
- Topsoil placement – Below the Drivable Drainage Channel and Sedimentation Basin Outer Berm Slope:

  - Topsoil was transported to the active placement area and dumped at the outer edge of the Drivable Drainage Channel and Sedimentation Basin berm.
  - The topsoil was placed with the excavator bucket from the crest to the toe of the slope.
  - The thickness of the topsoil was controlled by GPS equipment.
  - The Brown and Caldwell CQA monitor(s) visually observed the graded topsoil for the presence of organic material, large rocks, roots, and other debris/foreign material. This material was removed from the topsoil.
- Before the topsoil was placed, the soil material was "cleated" with the dozer tracks by running the dozer perpendicular up the slope from the toe to the crest.

3.8.2.4 Riprap Extension

The riprap extension was riprap material placed above the riprap wall installed during the Phase I Remedial Action implementation to an elevation of 612.0 msl at the former North Soil Removal Area. The riprap extension provided a riprap face that extended above the 100-year flood elevation and provided protection of this area from potential erosion during the Black River flood events.

The riprap material for the installation of the riprap extension was obtained and delivered to the Site. The riprap material passed the laboratory QC testing requirements (see Section 3.1). The following construction methods were performed for riprap placement:

- End dump highway trucks delivered the ODOT Type A riprap at the Site.
- Haynes loaded the ODOT Type A riprap into the Cat 714 articulated end dump with the Kobelco 235 SRLC excavator.
- The Cat 714 end dump hauled the riprap to the Riprap Extension Area and stockpiled the riprap material for placement.
- The Kobelco 235 SRLC excavator was used to pick up and place individual pieces of riprap at the riprap extension area. Each piece of riprap was manipulated with the excavator bucket to "lock" the pieces of riprap together.

3.8.2.5 Surface Water Diversion Channels

The location, side slopes, and bottom grade of the surface water diversions channels were constructed as the Soil Buttress fill was placed. The channels were lined with the TRM infilled with FGM/seed/fertilizer/water slurry. The TRM and FGM materials passed the laboratory QC testing requirements (see Section 3.1). The following construction methods were performed for the surface water diversion channels:

- The Case RT60 Trencher was used to create a trench for placement of the outer edges and ends of the TRM.
- The TRM sections were rolled out through the channels and anchored in the outer edge trenches and on each end. Staples/anchor pins were inserted 8 inches from the panel edges and on 12 inch spacing across the width of the panels and at the panel end overlaps.
- The TRM was infilled with the FGM/seed using a truck-mounted hydroseeder.

A TRM/FGM representative, Tony Blatnik, CPESC, with JMD Company, was onsite for the initiation and periodically throughout the installation of the TRM/FGM system.

3.8.2.6 Drivable Drainage Channel

The Drivable Drainage Channel was constructed as part of the North Access Road to serve as a drainage channel to direct surface water runoff to the Sedimentation Basin and as a road to provide access to the groundwater monitoring wells installed along the toe of the outside edge of the Drivable Drainage

Channel. The Netpave® 50 interlocking grids were used in the bottom of the Drivable Drainage Channel to provide structure and strength for vehicles the size of pickup trucks the ability to drive on the channel without compromising the integrity of the channel. The materials used in the construction of the Drivable Drainage Channel passed the laboratory QC testing requirements (see Section 3.1). The following construction methods were performed for the Drivable Drainage Channel:

- The channel surface was rolled and observed for unacceptable protrusions (e.g., rocks, sticks, etc.) before geotextile placement was initiated.
- 4-oz. non-woven geotextile was placed on the surface of the channel.
    - Adjacent geotextile panels were overlapped.
    - Geotextile placement occurred in such a manner as to minimize wrinkling and to prevent crimping, scratching, and tearing of the geotextile.
- The No. 57 aggregate base layer was placed in a minimum 12-inch lift thickness on top of the geotextile.
- The No. 8 aggregate bedding layer was placed in a minimum 4-inch lift thickness on top of the base layer.
- The Netpave® 50 interlocking grids were placed and locked on top of the bedding layer
- The grids were gently pushed into the bedding layer to an approximate depth of ¼ inch.
- 1/2-inch of topsoil was placed inside the grid spaces.
- The TRM was infilled with the FGM/seed/fertilizer/water slurry using a truck-mounted hydroseeder.

3.8.2.7 Downchute Channel

The location, side slopes, and bottom grade of the downchute channel was constructed as the Soil Buttress fill was placed. The channel was lined with the TRM) infilled with the FGM/seed/fertilizer/water slurry. The TRM and FGM materials passed the laboratory QC testing requirements (see Section 3.1). The following construction methods were performed for the downchute channel:

- The Case RT60 Trencher was used to create a trench for placement of the outer edges and ends of the TRM.
- The TRM sections were rolled out through the channel and anchored in the outer edge trenches and on each end. Staples/anchor pins were inserted 8 inches from the panel edges and on 12 inch spacing across the width of the panels and at the panel end overlaps.
- The TRM was infilled with the FGM/seed/fertilizer/water slurry using a truck-mounted hydroseeder.
- The 8 oz. non-woven geotextile was placed at the end of the channel to form the riprap channel outlet structure.
- The ODOT Type B riprap material was placed to install the riprap channel outlet structure.

3.8.3 CQA Monitoring

Brown and Caldwell's CQA monitor visually observed the construction/installation of the Soil Buttress for workmanship and continuity. The construction/installation activities were documented in written format using field books and forms with photographs used to provide visual documentation. Daily Field Logs providing a summary of the Soil Buttress construction/installation are provided in Appendix A with the construction/installation photographs and descriptive photograph log provided in Appendix B. The following items were observed and documented by the Brown and Caldwell's CQA monitor during construction/installation of the Soil Buttress.

3.8.3.1 Seep Drains

- The HDPE pipe was visually observed for conformance with the construction drawings, as well as to verify there were no signs of damage. The pipe was determined to be in conformance with the construction drawings and no visual damage to the pipe was observed.
- Butt-fusion welds were visually observed to be completed according to the butt-fusion welding specifications. The Brown and Caldwell CQA monitor observed hot plate temperature, holding times, and welding techniques. The welds were determined to be in conformance with the specifications.
- Proper horizontal location and depth of the trench.
- Proper pipe bedding, alignment, grade, and backfill.

The Brown and Caldwell CQA monitor performed air monitoring during the construction/installation of the seep drains. A multi-gas QRAE+ monitoring device and a photoionization detector (PID) MiniRAE 2000, manufactured by RAE Systems, were used to conduct the air monitoring. The atmospheric concentrations within the breathing zone were monitored for methane (lower explosive limit [LEL]), oxygen, carbon monoxide, and hydrogen sulfide with the multi-gas QRAE+. The MiniRAE 2000 was used to screen for volatile organic compounds (VOCs). No issues were detected during the construction/installation of the seep drains and the air monitoring results are provided in Appendix J.

3.8.3.2 Soil Placement

- The quantity of material present in each load.
- The presence of large rocks, roots, debris, foreign materials, etc. in the soil material. These types of items, when observed, were removed from the soil material.
- Visually observed the placement and uniformity of the lifts to a maximum uncompacted thickness of eight inches.
- Performance of adequate number of passes (minimum of five passes) with the sheepsfoot compactor.
- Establishment of the grades to promote surface water flow from the graded area while eliminating potential surface water accumulation area(s).
- Sealing the surface of the top lift at the end of each workday and scarifying the top lift surface at the beginning of each workday before additional soil was placed.
- Condition of the soil material before the topsoil material was placed.
- Performed in-place density testing using a nuclear density gauge to verify acceptance of compaction of each lift as discussed in Section 3.7.4 of the Certification Report.

3.8.3.3 Topsoil Placement

- The quantity of material present in each load.
- The presence of large rocks, roots, debris, foreign materials, etc. in the topsoil material. These types of items, when observed, were removed from the topsoil material.
- Visually observed the placement and uniformity of the lifts to a thickness of three to four inches.
- Cleating of the soil material before the topsoil was placed.
- Establishment of the grades to promote surface water flow from the graded area while eliminating potential surface water accumulation area(s).

3.8.3.4 Riprap Extension

- Visually observed the placement of the riprap material to the designated elevation (612.0 msl) and lateral extents.

- Proper thickness of riprap face.
- Visually observed the completed riprap placement for open or "void" spaces in the riprap face.

3.8.3.5 Surface Water Diversion Channels

- Visually observed the channel shape and grades.
- Proper anchor trench construction.
- Proper TRM placement, overlap, and anchoring.
- Proper staples/anchor pins spacing and installation.
- Proper TRM infill with the FGM/seed/fertilizer/water slurry.

3.8.3.6 Drivable Drainage Channel

- Visually observed the channel shape and grades.
- Observe the channel surface for unacceptable protrusions (e.g., rocks, sticks, etc.) before geotextile placement was initiated.
- Proper geotextile placement and overlapping.
- Visually observed the placement and uniformity of the base layer to a minimum thickness of 12 inches.
- Visually observed the placement and uniformity of the bedding layer to a minimum thickness of 4 inches.
- Proper placement and locking of the Netpave® 50 interlocking grids on top of the bedding layer
- Proper bedding of the grids into the bedding layer.
- Visually observed the placement and uniformity of the topsoil to a minimum thickness of ½-inch inside the grid spaces.
- Proper TRM infill with the FGM/seed/fertilizer/water slurry.

3.8.3.7 Downchute Channel

- Visually observed the channel shape and grade.
- Proper anchor trench construction.
- Proper TRM placement, overlap, and anchoring.
- Proper staples/anchor pins spacing and installation.
- Proper TRM infill with the FGM/seed/fertilizer/water slurry.
- Observe the ground surface for unacceptable protrusions (e.g., rocks, sticks, etc.) before geotextile placement was initiated.
- Proper geotextile placement.
    - Adjacent geotextile panels were overlapped.
    - Geotextile placement occurred in such a manner as to minimize wrinkling and to prevent crimping, scratching, and tearing of the geotextile.
- Observed the placement and uniformity of the ODOT Type B riprap material.

Throughout the performance of the Soil Buttress construction, the Brown and Caldwell CQA monitor(s) observed Ford Road for the "tracking" of soil material from the Site. Haynes was directed to sweep and/or washdown Ford Road when site conditions at the Site dictated.

3.8.4 Quality Assurance (QA) Testing

Field QA testing was performed for the off-site soil materials used to construct the Soil Buttress. The minimum compaction specification for the off-site soil material was as follows:

- 95 percent of the maximum dry density with moisture content -3% to +2% of optimum as determined by the Modified Proctor.

The Brown and Caldwell CQA monitor(s) performed the in-situ moisture/density testing using a nuclear density gauge for at least two tests per lift per acre in accordance with the CQAP prior to acceptance of the lift by the Brown and Caldwell CQA monitor(s). A total of 275 in-situ moisture/density tests were performed during the construction of the Soil Buttress. The in-situ moisture/density test results are provided in Appendix G.

3.9 Upper Surface Area Final Cover System Cap

The Upper Surface Area required the construction of a final cover system cap to be compliant with the 1976 Ohio EPA final cover system regulations. Specifically, the thickness of the cap was required to be two feet thick (24-inches) constructed with soil material possessing a permeability (k) of $\leq 1 \times 10^{-5}$ centimeters per second (cm/sec). The Upper Surface Area final cover system cap (cap) implementation included the performance of the following activities:

- Grading soil from the Phase I Onsite Soil Placement Area.
- Incorporation of the investigation-derived waste (IDW) soil drums.
- Construction of the cap including the following:
    - Topsoil stripping/stockpiling.
    - Subgrade construction.
    - Cap construction.
    - Topsoil placement/replacement.

Brown and Caldwell's CQA Monitor(s) performed field oversight to document the materials, equipment, construction/installation methods, and CQA monitoring and tests performed for the cap construction. The following sections of the Certification Report provide a summary of the written documentation for the materials and equipment (Section 3.8.1), construction/installation methods (Section 3.8.2), CQA monitoring (Section 3.8.3), and tests (Section 3.8.4) performed during construction of the cap. Photographic documentation is provided in Appendix B. Information, data, and test results for the QC and QA requirements for materials and construction methods is provided in appendices as noted within each section of the cap construction discussion.

3.9.1 Materials and Equipment

The materials used in the construction of the cap included the following:

- Off-site soil obtained from the following approved sources:
    - Camp Wahoo.
    - Grobe Fruit Farm.

      The off-site soil borrow source was approved through quality control testing as discussed in Section 3.1 of the Certification Report.
- Onsite topsoil stripped and placed in a stockpile.
- Off-site topsoil obtained from the following approved sources:
    - Metro Parks Service.

- Grobe Fruit Farm.

Each of these off-site topsoil borrow sources were approved through quality control testing as discussed in Section 3.1 of the Certification Report.

Equipment used for the cap construction included the following:

- Phase I Onsite Soil Placement Area:
  - John Deere 750J dozer.
- IDW soil drums:
  - John Deere 304J endloader.
  - John Deere 750J dozer.
  - Kobelco 235 SRLC excavator.
- Cap construction:
  - John Deere 750J dozers; one with a GPS attachment.
  - John Deere 762B scrapers.
  - John Deere 862 scraper.
  - Case IH MX 255 tractor with box scraper.
  - Cat 815B sheepsfoot compactor.
  - Cat 714 articulated end dumps.
  - Kobelco 235 SRLC excavator.
  - Water truck.
  - Lay-Mor 8B sweeper.
  - Various hand tools.

3.9.2 Construction/Installation Methods

Haynes performed the cap construction. Brown and Caldwell's CQA monitor(s) provided oversight and documentation of the cap construction activities as presented in Section 3.9.3 of the Certification Report. The following sections of the Certification Report provide discussions of the construction/ installation methods performed for each of the cap construction activities.

3.9.2.1 Phase I Onsite Soil Placement Area

The soil in the Onsite Soil Placement Area from the Phase I Remedial Action work was graded evenly to areas adjacent to the Onsite Soil Placement Area that was covered with a minimum of 24 inches of lower permeability soil.

3.9.2.2 IDW Soil Drums

The IDW soil drums were removed from the onsite Conex box and were transported to the placement area using the endloader. The soil in the drums was emptied and the soil was evenly spread. The drums were smashed with the excavator bucket and run over with the dozer to make the drums as flat as possible. The placement area was picked so that a minimum of 24 inches of lower permeability soil was placed above the soil and drums. The location where the soil and drums were placed in shown on Project Record Drawing RD-10

3.9.2.3 Topsoil Stripping

The existing topsoil present on the Upper Surface Area was removed and placed in a stockpile for replacement when the cap construction was completed. The vegetation was removed with the topsoil. Haynes used a dozer to blade approximately 4 to 6 inches of topsoil across the northern two-thirds of the Upper Surface Area and pushed the topsoil into a stockpile. Topsoil from the southern part of the Upper Surface Area was removed with the self-loading scrapers and placed in the stockpile. The stockpile was located in the northwestern part of the Upper Surface Area 15 to 20 feet west of the crest of the Steep Slope Area.

3.9.2.4 Subgrade Construction

The subgrade construction consisted of regrading/redistributing the existing soil in the Upper Surface Area to provide a stable base on which to place the lower permeability soil for the cap construction. Haynes used the dozer equipped with the GPS attachment to regrade/redistribute the existing soil at the required elevations and grades.

In the course of regrading the onsite soil, waste material was intermittently encountered in one location before the required subgrade elevation was established. The location of this area is shown on Project Record Drawing RD-03. In consultation with William T. Frederick of the U.S. Army Corps of Engineers (ACOE), who was present at the Site when the northern end this area was encountered, the following methods were used to handle the exposed waste:

- The limits of the exposed waste were delineated with agreement of the Brown and Caldwell CQA monitor and Mr. Frederick of the ACOE.
    - The waste material consisted of plastic, pieces of wood, broken ceramic pieces, etc. No municipal-type waste material was identified in waste material excavated and placed beneath the Steep Slope Area soil buttress.
- Haynes excavated the waste material to an average depth of 18 to 24 inches below the existing ground surface.
    - This depth was determined based on the final grade of the cap required in this area in order to provide a minimum of 24 inches of lower permeability soil above the waste.
- The waste was placed in the articulated end dump and hauled to the Steep Slope Area and placed against at the toe of the fill bench and was pushed up the slope.
    - 1,565 cubic yards of waste was placed and pushed up the slope.
- The placed waste material was covered with the Steep Slope Area soil buttress material.
- The excavation was filled with the lower permeability soil material to the surface adjacent to the excavation.

3.9.2.5 Cap Construction

The off-site soil material was obtained from the following sources:

- Metro Parks Service soil stockpile.
- Camp Wahoo.
- Grobe Fruit Farm.

The off-site soil material met the required specifications as confirmed by laboratory QC testing (see Section 3.1) and the Quality Assurance (QA) testing requirements as discussed in Section 3.11.4. The following methods were performed for the cap construction:

- KS Associates performed construction stakeout for the cap construction.

- Haynes excavated the soil material and loaded the excavated soil in the 12-15-yd end dump highway trucks.
- The trucks hauled the soil from the borrow areas to the Site.
- Haynes' site supervisor or the compactor operator directed the trucks where to dump each load.
    - Truck traffic entered the Site at one construction entrance and exited the Site at the other construction entrance.
- The soil was graded to a maximum 8-inch thick loose lift with the Cat 815B sheepsfoot compactor or the John Deere 750J dozer.
    - The thickness of each lift and the grade of the cap was controlled by the GPS attachment on the dozer blade.
    - The Brown and Caldwell CQA monitor(s) visually observed the graded soil for the presence of organic material, large rocks, roots, and other debris/foreign material. This material was removed from the soil.
- After each lift was graded, the lift was compacted using a Cat 815B sheepsfoot compactor making a minimum of five passes over the lift.
- At the end of each workday, the surface of the top lift was sealed.
- The top lift surface was scarified before additional soil was placed at the beginning of each workday.

A request was made by the Metro Parks Service to leave some of the trees along Ford Road. The remaining trees would provide a visual barrier between the Upper Surface Area of the Site and residents driving along Ford Road. A figure was produced showing which trees could be left in place along Ford Road based on a site walkthrough attended by representatives of Brown and Caldwell and the Ohio EPA. The figure was provided to the U.S. EPA and Ohio EPA for review. A consensus was reached with the Project Team Members for which trees would remain with the Ohio EPA providing approval in an e-mail to the U.S. EPA. The trees designated for removal were marked in the field. The limits of the constructed cap along Ford Road stopped short of the remaining tree line with the cap tying into existing ground to promote surface water runoff to the ditch running along Ford Road.

3.9.2.6 Onsite Topsoil Replacement

The following construction methods were performed for the onsite topsoil replacement:

- Self-loading scrapers were used to load topsoil from the onsite stockpile.
- The topsoil was placed at various locations across the Upper Surface Area.
- The topsoil was graded to an even thickness on top of the cap across the Upper Surface Area.
    - The thickness of the topsoil was controlled by GPS equipment.
    - The Brown and Caldwell CQA monitor(s) visually observed the graded topsoil for the presence of organic material, large rocks, roots, and other debris/foreign material. This material was removed from the topsoil.

3.9.2.7 Off-Site Topsoil Placement

The off-site topsoil material was obtained from the following sources:

- Metro Parks Service.
- Grobe Fruit Farm.

The off-site topsoil material met the required specifications based on laboratory QC testing (see Section 3.1). The following construction methods were performed for the off-site topsoil placement:

- Haynes segregated the topsoil material into stockpiles at each of the borrow sources then loaded the topsoil in the 12-15-yd end dump highway trucks.
- The trucks hauled the topsoil from the borrow areas to the Site.
- Haynes' site supervisor directed the trucks where to place the topsoil in stockpiles at the Upper Surface Area.
- Topsoil placement:
    - Self-loading scrapers were used to load topsoil from the onsite stockpile.
    - The topsoil was placed at various locations across the Upper Surface Area.
    - The topsoil was graded to an even thickness on top of the cap across the Upper Surface Area with the 750J dozer equipped with a GSP unit.
        - The thickness of the topsoil was controlled by GPS equipment.
        - The dozer operators and the Brown and Caldwell CQA monitor(s) visually observed the graded topsoil for the presence of organic material, large rocks, roots, and other debris/foreign material. This material was removed from the topsoil.

3.9.3 CQA Monitoring

Brown and Caldwell's CQA monitor(s) visually observed the construction of the cap for workmanship and continuity. The construction/installation activities were documented in written format using field books and forms with photographs used to provide visual documentation. Daily Field Logs providing a summary of the cap construction are provided in Appendix A with the construction photographs and descriptive photograph log provided in Appendix B. The following items were observed and documented by the Brown and Caldwell's CQA monitor during construction of the cap.

3.9.3.1 Phase I Onsite Soil Placement Area Placement

- The soil was placed in a location of the Upper Surface Area that was adequately covered by the cap.

3.9.3.2 IDW Soil Drums

- The soil and drums placed in a location of the Upper Surface Area that was adequately covered by the cap.
- The drums were crushed and placed in a manner to not create obstructions/protrusions into the subgrade and/or cap.

3.9.3.3 Topsoil Stripping

- Topsoil removed from the designated areas.
- Proper depth of topsoil including vegetation removal.
- Placement of removed topsoil in the stockpile.

3.9.3.4 Subgrade Construction

- The presence of large rocks, roots, debris, foreign materials, waste, etc. in the subgrade soil material. These types of items, when observed, were removed from the soil material.
- Subgrade:
    - Visually observed the placement and uniformity of the lifts to a maximum uncompacted thickness of eight inches.
    - Performance of adequate number of passes (minimum of five passes) with the sheepsfoot compactor.

  - Sealing the surface of the top lift at the end of each workday and scarifying the top lift surface at the beginning of each workday before additional soil was placed.
- Establishment of the grades to promote surface water flow from the graded area while eliminating potential surface water accumulation area(s).
- Condition of the subgrade before the lower permemability soil material was placed.
- For the waste removal area:
  - The excavation performed to the limits as delineated.
  - The excavation limited to no deeper than an average depth of 18-24 inches below the existing ground surface.
  - The waste placed in a location and pushed up the slope at the Steep Slope Area that was adequately covered by the Steep Slope Area soil buttress material.
  - The excavation was filled with the lower permeability soil material to the surface adjacent to the excavation.

3.9.3.5 Cap Construction

- The quantity of material present in each load.
- The presence of large rocks, roots, debris, foreign materials, etc. in the lower permeability soil material. These types of items, when observed, were removed from the soil material.
- Visually observed the placement and uniformity of the lifts to a maximum uncompacted thickness of eight inches.
- Performance of adequate number of passes (minimum of five passes) with the sheepsfoot compactor.
- Establishment of the grades to promote surface water flow from the graded area while eliminating potential surface water accumulation area(s).
- Sealing the surface of the top lift at the end of each workday and scarifying the top lift surface at the beginning of each workday before additional soil was placed.
- Condition of the soil material before the topsoil material was placed.
- Performed In-place density testing using a nuclear density gauge to verify acceptance of compaction of each lift as discussed in Section 3.8.4 of the Certification Report.
- KS Associates provided field survey information from an established 50-foot grid pattern across the Upper Surface Area. This information was used to verify that a minimum of two feet of low permeability soil material was placed above the top of existing waste. Brown and Caldwell compared the field survey information for the top of the low permeability soil material to the top of existing waste to verify the minimum thickness of two feet (see Project Record Drawing RD-04).

3.9.3.6 Onsite Topsoil Replacement

- The presence of large rocks, roots, debris, foreign materials, etc. in the topsoil material. These types of items, when observed, were removed from the topsoil material.
- Visually observed the placement and uniformity of the lifts to a thickness of three to four inches.
- Establishment of the grades to promote surface water flow from the graded area while eliminating potential surface water accumulation area(s).

3.9.3.7 Off-Site Topsoil Placement

- The quantity of material present in each load.

- The presence of large rocks, roots, debris, foreign materials, etc. in the topsoil material. These types of items, when observed, were removed from the topsoil material.
- Visually observed the placement and uniformity of the lifts to a thickness of three to four inches.
- Establishment of the grades to promote surface water flow from the graded area while eliminating potential surface water accumulation area(s).

3.9.4 Quality Assurance (QA) Testing

Field QA testing was performed for the off-site soil materials used to construct the cap. The minimum compaction specification for the off-site soil material was as follows:

- 95 percent of the maximum dry density with moisture content -2% to +3% of optimum as determined by the Modified Proctor.

The Brown and Caldwell CQA monitor(s) performed the in-situ moisture/density testing using a nuclear density gauge for at least two tests per lift per acre in accordance with the CQAP prior to acceptance of the lift by the Brown and Caldwell CQA monitor(s). A total of 31 in-situ moisture/density tests were performed during the construction of the cap. The in-situ moisture/density test results are provided in Appendix G.

3.10 Ford Road Culvert Outlet Channel

The Ford Road Culvert Outlet Channel (Outlet Channel) work involved adjusting the location of the Outlet Channel to the north away from the North Access Road construction. This adjustment occurred from the existing concrete headwall for 60 feet to the east. The remainder of the Outlet Channel was constructed down the slope to the east toward the Black River floodplain. The eastern end of the Outlet Channel terminated where the Outlet Channel intersected with the existing riprap material associated with the City of Elyria siphon to the wastewater treatment plant (WWTP) across the river. The upper reach of the Outlet Channel was constructed with Type D ODOT aggregate and the rest of the Outlet Channel was constructed with the geosynthetic Turf Reinforcement Mat (TRM) Enkamat® 7020 with Flexible Growth Medium (FGM) Flexterra® HP-FGM™ infill.

During construction of the Outlet Channel, a seep appeared in the sideslope on the northern side toward the upper end of the excavated Outlet Channel sideslope. Initially there was a heavy odor associated with the seep that dissipated over a few days. Based on the location of the seep outbreak (north of the landfill and in proximity to the City of Elyria (City) siphon to the WWTP, Brown and Caldwell contacted the City of Elyria and asked City representatives to come to the Site to look at the seep. The City collected samples of the seep and based on the analytical results and visual observations, the seep appeared to be water discharging from south of the Channel excavation. Since ammonia was not detected in the sample and trace metals are within the levels expected for natural groundwater, the seep did not appear to be leachate or wastewater. Following review of the analytical data by William Frederick of the ACOE, a decision was made to monitor the seep and address any further issues as part of the long-term operations and maintenance (O&M) for the Site. Analytical results and a figure depicting the location of the seep are provided in Appendix H.

The following sections of the Certification Report provide a summary of the written documentation for the materials and equipment (Section 3.9.1), construction/installation methods (Section 3.9.2), and CQA monitoring (Section 3.9.3) performed during construction of the Outlet Channel. Photographic documentation is provided in Appendix B. Information, data, and test results for the QC requirements for materials and construction methods is provided in appendices as noted within each section of the Outlet Channel discussion.

3.10.1 Materials and Equipment

The materials used in the construction of the Outlet Channel included the following:

- ODOT Type D aggregate.
- 8-oz. non-woven geotextile.
- TRM with FGM/seed/fertilizer/water slurry infill.

Equipment used for the Outlet Channel construction included the following:

- John Deere 750J dozer with a GPS attachment.
- Kobelco 235 SRLC excavator.
- Cat 714 articulated end dumps.
- John Deere 304J endloader.
- Various hand tools.

3.10.2 Construction/Installation Methods

The location, side slopes, and bottom grade of the Outlet Channel was constructed in virgin soil with some fill placed at the existing concrete headwall. The Outlet Channel was lined with TRM with FGM infill and aggregate. The aggregate and TRM and FGM materials passed the laboratory QC testing requirements (see Section 3.1). The following construction methods were performed for the Outlet Channel:

- Upper Channel Reach:
    - The channel surface was observed for unacceptable protrusions (e.g., rocks, sticks, etc.) before geotextile placement was initiated.
    - 8-oz. non-woven geotextile was placed on the surface of the channel.
        - Adjacent geotextile panels were overlapped.
        - Geotextile placement occurred in such a manner as to minimize wrinkling and to prevent crimping, scratching, and tearing of the geotextile.
    - The ODOT Type D riprap was placed on top of the geotextile.
- Lower Channel Reach:
    - The Case RT60 Trencher was used to create a trench for placement of the outer edges and ends of the TRM.
    - The TRM sections were rolled out through the channels and anchored in the outer edge trenches and on each end. Staples/anchor pins were inserted 8 inches from the panel edges and on 12 inch spacing across the width of the panels and at the panel end overlaps.
    - The TRM was infilled with the FGM/seed/fertilizer/water slurry using a truck-mounted hydroseeder.

3.10.3 CQA Monitoring

Brown and Caldwell's CQA monitor visually observed the construction/installation of the Outlet Channel for workmanship and continuity. The construction/installation activities were documented in written format using field books and forms with photographs used to provide visual documentation. Daily Field Logs providing a summary of the Outlet Channel construction/installation are provided in Appendix A with the construction/installation photographs and descriptive photograph log provided in Appendix B. The following items were observed and documented by the Brown and Caldwell's CQA monitor during construction/installation of the Outlet Channel:

- Observed the channel shape and grades.
- Observe the channel surface for unacceptable protrusions (e.g., rocks, sticks, etc.) before geotextile placement was initiated.
- Proper geotextile placement.
    - Adjacent geotextile panels were overlapped per manufacturer's recommendations.
    - Geotextile placement occurred in such a manner as to minimize wrinkling and to prevent crimping, scratching, and tearing of the geotextile.
- Observed the placement and uniformity of the ODOT Type D aggregate.
- Proper TRM anchor trench construction.
- Proper TRM placement, overlap, and anchoring.
- Proper staples/anchor pins spacing and installation.
- Proper TRM infill with the FGM/seed/fertilizer/water slurry.

3.11 Site Restoration and Closure

Site Restoration and Closure activities were performed from September 24, 2012 through January 15, 2013 including the following:

- Installation of seven new groundwater monitoring wells.

  The new groundwater monitoring wells (wells) replaced the seven wells abandoned in 2011 as part of the Phase I Remedial Action implementation. The location of the new wells was proposed to the U.S. EPA on September 7, 2012 and approved by the U.S. EPA on September 9, 2012. Several modifications to the approved Field Sampling Plan (FSP) procedures, specific to this work requested by the USACE, were submitted to the U.S. EPA on September 10, 2012 and approved by the U.S. EPA on September 11, 2012. The modifications included not collecting continuous soil samples of recently constructed Steep Slope Area Soil Buttress (Soil Buttress) fill; screening the wells in the overburden versus straddling the water table by "seating" each well approximately six to 12 inches into the underlying shale bedrock; and disposal of un-impacted soil cuttings, decontamination water, and well development water in the onsite Sedimentation Basin. The Monitoring Well Installations and Development letter submitted to the U.S. EPA is provided in Appendix K.
- Installation of the geosynthetic Turf Reinforcement Mat (TRM) Enkamat® 7020 on the Steep Slope Area soil buttress (soil buttress) from the toe of soil buttress fill up to elevation 612.0 msl and on the exterior slope and the emergency spillway of the Sedimentation Basin berm (berm).
- Vegetation of the Upper Surface Area with the permanent seed mix including adjacent areas disturbed through the normal course of performing the work activities.
- Vegetation of the Steep Slope Area with the steep slope seed mix including adjacent areas disturbed through the normal course of performing the work activities.
    - Flexible Growth Medium (FGM) Flexterra® HP-FGM™ to infill the TRM.
    - Straw wattles installed parallel across the Steep Slope Area.
- Haynes demobilization from the Site.
- Willow stake planting from the southern end of the riprap at the former North Soil Removal Area to the south for approximately 280 feet within the Black River floodplain.
- Repair work for designated areas of Ford Road.
- Installation of the fence sections and gates at the North and South Access Road entrances.

The materials and equipment used (Section 3.10.1), construction/installation methods (Section 3.10.2), and CQA observations (Section 3.10.3) for each of the Site Restoration and Closure activities are discussed in the following sections.

3.11.1 Materials and Equipment

The materials used in the performance of the Site Restoration and Closure activities included the following:

- Groundwater Monitoring Wells:
  - 2-inch inside diameter (ID) Schedule 40 PVC with 10 feet of 0.010 slot well screen.
  - Silica sand, bentonite chips, and ready-mix concrete.
  - Lockable protective casings.
- TRM Installation:
  - Enkamat® 7020.

    Each of these materials was approved through quality control review as discussed in Section 3.1 of the Certification Report.
- Upper Surface Area Vegetation:
  - Flat Area seed mix.
  - Rye grass seed.
  - Fertilizer: 15-30-15.

    Each of these materials was approved through quality control review as discussed in Section 3.1 of the Certification Report with seed tags provided in Appendix L.
- Steep Slope Area Vegetation:
  - Slope Mix seed.
  - Rye grass seed.
  - Fertilizer: 15-30-15.
  - Flexterra® HP-FGM™.
  - AEC Premier straw wattle.

    Each of these materials was approved through quality control review as discussed in Section 3.1 of the Certification Report with seed tags provided in Appendix L.
- Willow Stake Planting:
  - 85 streamco willows.
  - 80 pussy willows.
  - 80 black willows.
- Fence and Gates Installation:
  - Three-rail tube fence sections and two 12-foot wide double drive bar gates with appurtenances.

    Each of these materials was approved through quality control review as discussed in Section 3.1 of the Certification Report.

The equipment used in the performance of the Site Restoration and Closure activities included the following:

- Groundwater Monitoring Wells:
  - ATV drill rig.
  - Split-spoon samplers.
  - Support truck.
  - High pressure water cleaner.
  - Various hand tools.
- TRM Installation:
  - Case RT60 trencher.
  - John Deere 304J endloader.
  - Various hand tools.
- Upper Surface Area Vegetation:
  - Cat D5 Dozer.
  - John Deere 304J endloader.
  - Truck-mounted hydroseeder.
  - Various hand tools.
- Steep Slope Area Vegetation:
  - Cat D5 Dozer.
  - John Deere 304J endloader.
  - Truck-mounted hydroseeder.
  - Various hand tools.
- Willow Stake Planting:
  - Hand-held spades.
- Fence and Gates Installation:
  - Hand-held power auger.
  - Various hand tools.

3.11.2 Construction/Installation Methods

Haynes performed the demobilization activities and subcontracted the following entities for performance of the Site Restoration and Closure activities:

- Zak for vegetation and TRM/FGM installation.
- Precision Paving Inc. from Elyria, Ohio for Ford Road repairs.
- Inline Fence Inc. from Shelby, Ohio for the fence and gates installation.

Brown and Caldwell's CQA monitor(s) and Geologist provided oversight and documentation of the Site Restoration and Closure activities as presented in Section 3.11.3 of the Certification Report. The following sections of the Certification Report provide discussions of the construction/installation methods performed for each of the Site Restoration and Closure activities.

3.11.2.1 Groundwater Monitoring Well Installation/Development

The following methods were used for the groundwater monitoring well (well) installations:

- The ATV drill rig was positioned over the location for the new wells.

- Bore holes were drilled using 4-1/4-inch diameter hollow stem augers (HSA).
    - Soil samples were not collected while drilling through the recently constructed Steep Slope Area Soil Buttress (Soil Buttress) fill (approved by the U.S. EPA on September 11, 2013).
    - Continuous sampling using split-spoon samplers was performed from the depth where the original ground surface was encountered (bottom of the Soil Buttress fill) to the termination depth of each well.
    - Each well was "seated" approximately six to twelve inches into the underlying shale bedrock and screened in the overburden as requested by the ACOE (approved by the U.S. EPA on September 11, 2013).
    - The soil cuttings were screened with a photionization detector (PID) to check for impacts before spreading the cuttings on the ground surface in the vicinity of the boring.
    - Drilling equipment in contact with the subsurface material was decontaminated between well locations using pressurized water/steam. The wash water was discharged to the Sedimentation Basin.
- The well casing and well screen were placed through the middle of the HSA.
- The augers were raised incrementally allowing placement of the silica sand pack in the bore hole annulus from the bottom of the well screen to a height two feet above the well screen.
- A bentonite seal using bentonite chips followed by a bentonite slurry was tremie grouted to within three feet of the ground surface adjacent to the well.
- The final three feet was filled with ready-mix concrete.
- A four-inch square by five-foot long protective steel casing with lockable cap was placed over the well casing stick-up and set inside a two-foot by two-foot by four-inch thick concrete pad.
- The new wells were surveyed for location and elevation control by Bair, Goode & Associates, Inc. of New Philadelphia, Ohio.

The following methods were used for the well development of the seven new wells:

- TTL used surge blocks and submersible pumps on October 2, 2012 to develop the wells.
- Field parameters were measured throughout the development period.
- The development water was discharged to the Sedimentation Basin.

The following methods were used for the well development of the seven new wells and three existing wells by Brown and Caldwell from October 24 to October 26, 2012:

- Water levels for the ten wells were measured and recorded.
- Bailers were used to remove the groundwater, accumulated fines, and to surge the screened interval.
- Field parameters were measured and recorded throughout the development period.
- The development water was discharged to the Sedimentation Basin.

3.11.2.2 TRM Installation

The following construction methods were performed for the TRM installation:

- The Case RT60 Trencher was used to create a trench for placement of the outer edges and ends of the TRM.
- The TRM sections were rolled out down the slope from the crest to the toe and anchored in the outer edge trenches and on each end. Staples/anchor pins were inserted 8 inches from the

panel edges and on 12 inch spacing across the width of the panels and at the panel end overlaps.

- The TRM was infilled with the FGM/seed/fertilizer/water slurry using a truck-mounted hydroseeder.

3.11.2.3 Upper Surface Area Vegetation

The following construction methods were performed for the Upper Surface Area Vegetation:

- Finish grading of the areas to be vegetated was performed.
- The seed and fertilizer were loaded with water into the hydroseeder.
- The seed/fertilizer/water slurry was sprayed onto the areas to be vegetated.

3.11.2.4 Steep Slope Area Vegetation

The following construction methods were performed for the Steep Slope Area Vegetation:

- Before the FGM was placed, the topsoil material was "cleated" with the dozer tracks by walking the dozer perpendicular up the slope from the toe to the crest.
- The seed, fertilizer, and FGM were loaded with water into the hydroseeder.
- The FGM/seed/fertilizer/water slurry was sprayed onto the areas to be vegetated.
- The straw wattle was installed as follows:
    - A trench was excavated along the length of each individual wattle.
    - The wattle was placed in the trench.
    - The wood stakes were pounded through the wattle on 4-foot centers across the length of the wattle.
    - The ends of the wattles were overlapped a minimum of 12 inches on each end.

3.11.2.5 Demobilization

The following demobilization activities were performed:

- Brown and Caldwell made arrangement for removal of the Conex box from the Site; the Conex box was taken off the site on October 18, 2012.
- Haynes demobilized equipment from October 18, 2012 through October 23, 2012.
- Ohio Edison disconnected and removed the power line from the Ford Road pole to the pole at the office trailer on October 19, 2012.
- Office trailer was removed on October 22, 2012.
- Callahan removed the power pole at the office trailer on October 23, 2012.
- A final site walkthrough was performed on October 23, 2012 by the Brown and Caldwell CQA monitor and Haynes to check the integrity of the silt fence and straw bales along the Black River floodplain and the overall cleanliness of the Site.

3.11.2.6 Willow Stake Planting

The following construction/installation activities were performed for the willow stake planting:

- Brown and Caldwell ordered the willow stakes.
- The Brown and Caldwell CQA monitors, under the guidance of William Frederick of the ACOE, planted the willow stakes on October 13, 2012.
- The willow stakes were planted in a 5-foot triangular spacing that provided three rows along the approximate 280-foot horizontal floodplain.

  - 245 willow stakes were planted.
  - There were "left over" willow stakes that were planted in between the rocks placed at the toe of the fill and in between the triangular spaces.
- In addition to the willow stake planting, large rocks were randomly placed at the toe of the Steep Slope Area fill along the floodplain area.

3.11.2.7 Ford Road Repairs

Precision Paving Inc., subcontracted by Haynes, performed the Ford Road repairs for seven areas on November 20, 2012. The repair areas were previously identified by the Brown and Caldwell CQA monitor, Haynes, and the City of Elyria Assistant City Engineer. The following work was performed by Precision Paving Inc.:

- The identified pavement areas were milled down to the road subbase.
- Liquid tack material was sprayed on the subbase.
- 4-inches of ODOT 301 asphalt base and 3-inches of ODOT 448 asphalt surface were placed and rolled.
- Sealant was applied around the edges of the repairs.

3.11.2.8 Fence and Gates Installation

Inline Fence Inc., subcontracted by Haynes, installed the fence sections and gates at the North and South Access Roads on January 7, 2013 and January 15, 2013. The following work was performed by Inline Fence Inc.:

- Work performed on January 7, 2013:
  - Holes were augured for the fence and gate posts.
  - Fence and gate posts were set, plumbed with a level, and the annular space of auger hole as filled with concrete. The concrete was allowed to harden before the fence sections and gates were installed.
- Work performed on January 15, 2013:
  - The fence sections were assembled and attached to the fence posts.
  - The double-swing gates were attached to the gate posts.
  - The Brown and Caldwell CQA monitor bought combination locks and locked each gate.

3.11.3 CQA Monitoring

Brown and Caldwell's CQA monitor(s) and Geologist visually observed the Site Restoration and Closure activities for workmanship and continuity. The Site Restoration and Closure activities were documented in written format using field books and forms with photographs used to provide visual documentation. Daily Field Logs providing a summary of the Site Restoration and Closure activities are provided in Appendix A with the construction photographs and descriptive photograph log provided in Appendix B. The following items were observed and documented by the Brown and Caldwell's CQA monitor during performance of the Site Restoration and Closure activities.

3.11.3.1 Groundwater Monitoring Well Installation/Development

The Brown and Caldwell Geologist observed and documented the following for the well installations:

- The ATV drill rig set up on the correct location for each new well.
- Prepared a field log for each boring based on the soil cuttings and split-spoon samples.
- Proper borehole depth.

- Performed PID monitoring of the soil cuttings and split-spoon samples.
- Proper well construction.
- Proper placement of the soil cuttings and decontamination water discharge.
- Proper field survey for location and control.

The Brown and Caldwell Geologist observed and documented the following for the well development:

TTL

- Use of proper well development techniques.
- Measurement of field parameters.
- Proper discharge of the well development water.

Brown and Caldwell

- Measured and recorded water levels.
- Use of proper well development techniques.
- Measured and recorded field parameters; temperature, pH, conductivity, and turbidity.
- Filled out the Well Development Water form for each well.
- Proper discharge of the well development water.

3.11.3.2 TRM Installation

- Proper TRM anchor trench construction.
- Proper TRM placement, overlap, and anchoring.
- Proper staples/anchor pins spacing and installation.
- Proper TRM infill with the FGM/seed/fertilizer/water slurry.

3.11.3.3 Upper Surface Area Vegetation

- The final surface of the topsoil and the adjacent disturbed areas were ready for vegetation.
- Collected seed tags and fertilizer information to confirm type and quantity of materials used. Example seed tag and fertilizer information is provided in Appendix L.
- The proper quantities of seed and fertilizer were loaded with water into the hydroseeder.
- The seed/fertilizer/water slurry was sprayed evenly across the areas to be vegetated.

3.11.3.4 Steep Slope Area Vegetation

- The final surface of the topsoil, “cleated” by the dozer tracks, and the adjacent disturbed areas were ready for vegetation.
- Collected seed tags and fertilizer information to confirm type and quantity of materials used. Example seed tag and fertilizer information is provided in Appendix L.
- The proper quantities of FGM, seed, and fertilizer were loaded with water into the hydroseeder.
- The FGM/seed/fertilizer/water slurry was sprayed evenly across the areas to be vegetated.
- Proper alignment, end overlap, and staking of the straw wattle.

3.11.3.5 Demobilization

- Observed and documented the electric service disconnection and onsite power pole removal.
- Observed Haynes and Haynes’ subcontractors’ equipment, facilities, and ancillary items removal from the Site.

- Documented the final site walkthrough performed on October 23, 2012 by the Brown and Caldwell CQA monitor and Haynes to check the integrity of the silt fence and straw bales along the Black River floodplain and the overall cleanliness of the Site. No issues were identified during the walkthrough and the Phase II Remedial Action work was shutdown.

3.11.3.6 Willow Stake Planting

- Confirmed the type, number, and condition of willow stakes ordered.
- Documented and photographed the willow stake planting in a 5-foot triangular spacing creating three rows within the designated horizontal floodplain area.
- Documented and photographed the random placement of large rocks at the toe of the Steep Slope Area fill within the designated horizontal floodplain area.

3.11.3.7 Ford Road Repairs

Written and photographic documentation for the following Ford Road repairs:

- The identified pavement areas were milled down to the road subbase.
- Liquid tack material was sprayed on the subbase.
- 4-inches of ODOT 301 asphalt base and 3-inches of ODOT 448 asphalt surface were placed and rolled.
- Sealant was applied around the edges of the repairs.

3.11.3.8 Fence and Gates Installation

Written and photographic documentation for the fence and gates installation:

- Work performed on January 7, 2013:
    - Location and auguring of the fence and gate post holes.

      A representative of the City of Elyria Engineering Department was at the Site to verify the setback distance of the fence and gate post holes; the locations were verified.
    - Confirmed the fence and gate posts were set, plumbed, and the annular space of auger holes were filled with concrete.
- Work performed on January 15, 2013:
    - Confirmed the concrete had hardened and the fence and gate posts were upright and plumb.
    - Observed the fence section assembly and attachment to the fence posts.
    - Observed the double-swing gates assembly and attachment to the gate posts.
    - Placement of the combination locks on each gate

Section 4

Final Site Inspection

As required by Section XIV - Certification of Completion, Paragraph 53a – Completion of the Remedial Action of the Ford Road Landfill CD, the Final Site Inspection (Inspection) was scheduled for December 4, 2012. The Inspection was attended by representatives of the following entities:

City of Elyria	Metro Parks Service
Ford Road Settling Parties	Haynes Construction
U.S. EPA	Brown and Caldwell
Ohio EPA	Chronicle-Telegram

Demaree Collier of the U.S. EPA conducted the Inspection which included the following activities:

- Presentation of an overview/summary of the Site and the Phase I and Phase II Remedial Action implementation;
- A question/answer period;
- A Site walkthrough; and,
- Development of the "Punch List" items required to be completed by Haynes.

The Inspection summary is provided in Appendix A.

Due to scheduling conflicts, William T. Frederick of the ACOE was unable to attend the Inspection. Mr. Frederick, Joe Montello of the Settling Parties, and Rick Isaac of Brown and Caldwell met at the Site on November 30, 2012 to perform a Pre-Final Inspection. This Pre-Final Inspection allowed Mr. Frederick an opportunity to view the Site and ask questions for his Pre-Final Inspection presented to Demaree Collier of the U.S. EPA.

4.1 Erosion Issues

Following completion of the Phase II Remedial Action fieldwork activities on October 26, 2013, the Site was subjected to weather conditions i.e. heavy rainfall in the order of plus seven inches and high winds related to Hurricane Sandy between October 27, 2012 and October 31, 2012. The heavy rainfall caused erosion issues, which were observed and documented during the Inspection. Addressing the erosion issues was included in the Punch List developed for the Site during the Inspection.

Haynes addressed several erosion issues related to a major gully centrally-located in the Steep Slope Area Soil Buttress north of the Sedimentation Basin, gullies associated with the Downchute Channel, and repair of a gully across the upper portion of the South Access Road before the Inspection date. Based on the continuing rainfall experienced at the Site, the U.S. EPA, USACOE, and Ohio EPA agreed that some of the Punch List Items could be performed in the spring of 2013 when Site and weather conditions would be more favorable. This decision will minimize or eliminate further damage to the Site potentially caused by Haynes mobilizing equipment and performing the erosion repairs due to Site conditions.

4.2 Preliminary Close-Out Report

The Preliminary Close-Out Report (PCOR) was prepared by Demaree Collier of the U.S. EPA and submitted to Patrick S. Steerman of Steerman Environmental on February 8, 2013. The PCOR documents the completion of construction activities for the Phase I and Phase II Remedial Action implementation (construction) and signifies that the construction was performed consistent with the Record of decision (ROD), the Scope of Work in the CD, and the approved RDWPs and specifications. No significant deviations from the approved design plans occurred during the construction and the main components of the the selected remedy have been completed.

The PCOR addresses the Punch List items identified during the Inspection and states the Punch List items need to be addressed.

Section 5

Operation and Maintenance Plan Implementation

Implementation of the approved Operation and Maintenance (O&M) Plan will be performed by Metro Parks in accordance with a participation agreement between the Ford Road Landfill PRP Group and the Metro Parks. The Metro Parks will be responsible for performing the Site inspections and maintenance of the Remedial Action as required by the approved O&M Plan. Site inspections forms, provided in the approved O&M Plan and maintenance records will be required to be filled out and kept on file for review. Issues such as differential settlement, stressed vegetation, blockage of surface drainage features, etc. will be repaired and maintained by the Metro Parks when identified during the Site inspections.

The groundwater monitoring required by the O&M Plan will be performed by the Ford Road Landfill PRP Group.

5.1 Interim Operations and Maintenance Activities

Interim O&M activities implemented during the winter 2011/2012 shutdown period included the following:

- Periodic observations of the Site were made by the Metro Parks.
- Brown and Caldwell CQA monitor(s) periodically inspected the Site.

Based on the results of the inspections, the following activities were performed:

- The plastic covering the soil stockpile areas at the Upper Surface Area Soil Placement Area were pulled back in place and anchored with sand bags on January 18, 2012 and April 13, 2012.
- The rip-stop poly tarp material panels covering the soil material placed against the slopes of the landfill at the Lower Soil Placement Areas were pulled back in place and anchored with landscape staples and sand bags on February 9, 2012 and April 12, 2013.
- Silt fence repairs were performed on February 9, 2012 and silt material was removed from around straw bales.

Copies of the Inspection Reports are included in Appendix N.

THIS PAGE INTENTIONALLY LEFT BLANK.

Figures

THIS PAGE INTENTIONALLY LEFT BLANK.

Figure -1 - North Soil Removal Area
Excavated Soil

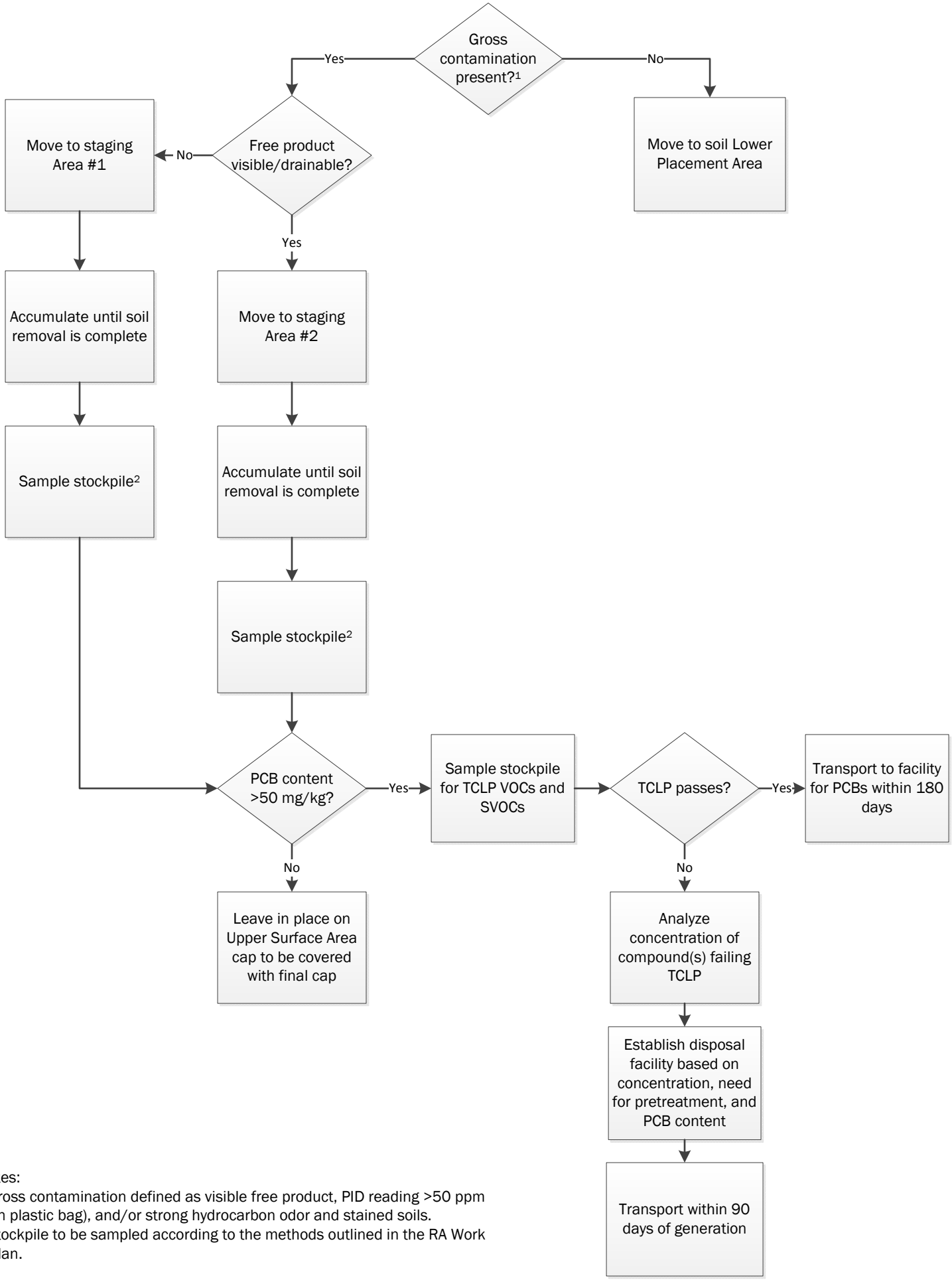

Notes:

[1] Gross contamination defined as visible free product, PID reading >50 ppm (in plastic bag), and/or strong hydrocarbon odor and stained soils.

[2] Stockpile to be sampled according to the methods outlined in the RA Work Plan.

THIS PAGE INTENTIONALLY LEFT BLANK

Figure -2 -South Soil Removal Area
Excavated Soil

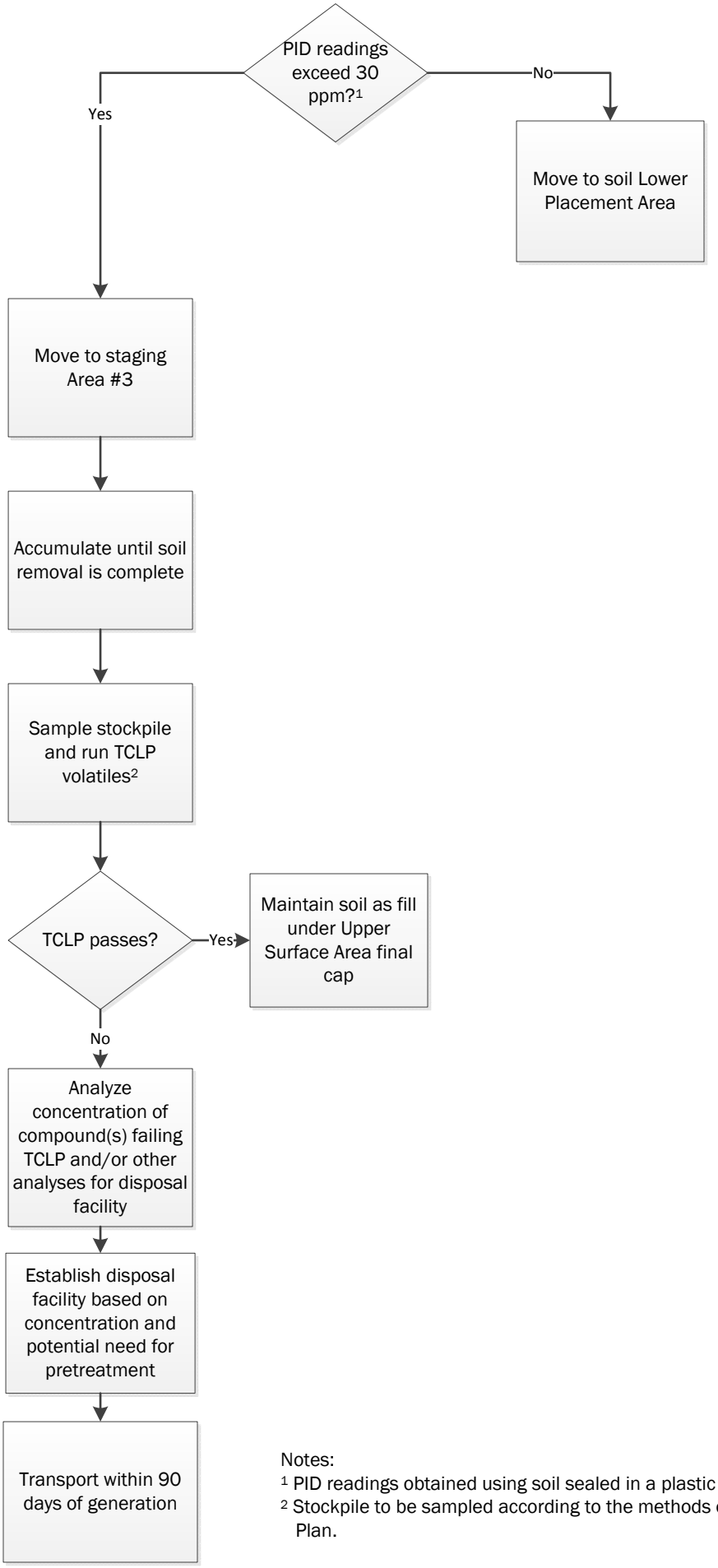

Notes:
[1] PID readings obtained using soil sealed in a plastic bag.
[2] Stockpile to be sampled according to the methods outlined in the RA Work Plan.

THIS PAGE INTENTIONALLY LEFT BLANK

Appendix A: Daily Field Logs and Weekly Progress Meeting Summaries

THIS PAGE INTENTIONALLY LEFT BLANK.

Daily Field Logs

THIS PAGE INTENTIONALLY LEFT BLANK.

Phase I Remedial Action

THIS PAGE INTENTIONALLY LEFT BLANK.

Brown AND Caldwell

Daily Field Report

Site:	Ford Rd.	**Date:**	08/29/11 (Monday)
Project:	Phase 1 Remedial Action Work	**Time In:**	0700
Project No:	141617	**Time Out:**	1100
BC Personnel:	Bill Foster	**Weather:**	80° Sunny

Items Worked On:

- ☑ Mobilization/Demobilization
- ☐ Temporary Erosion and Sedimentation Controls
- ☑ Site Preparation
- ☐ Sedimentation Basin Construction
- ☐ Access Road Construction
- ☐ WWTP
- ☐ Cement-Bentonite Slurry Wall Construction
- ☐ North Soil Removal Area
- ☐ South Soil Removal Area
- ☐ River Bank Construction
- ☐ Restoration
- ☐ Other -

Contractor/Subcontractors/Visitors/Alterations:

Contractor(s) - OP-Tech
Subcontractor(s) - Edwards Land clearing
Visitor(s) - Don George (OP Tech)
Phone Call(s) - Elena Goodhall / Rick Isaac
Alteration(s) - N/A
Material Delivered - Stone (#411)

Summary of Work:

- on site
- safety mtg.
- meet w/Dave Curran (OP-Tech) to discuss the days workplan.
- One guy from Edwards Landclearing is onsite to flag trees for removal.
- OP Tech is mobilizing to the site today.
- A dozer & A storage unit are delivered.
- Two more guys from Edwards arrive & begin clearing trees from the south access rd area. They stage the trees / up top, for chipping.
- Edwards is offsite
- OP-Tech is offsite.
- I leave the site.

Attachments:

- ☐ Contractor Report
- ☐ Field Notes
- ☐ Other:

Bill Foster — **Signature of CQA Monitor** — 08/29/11 — **Date**

Brown AND Caldwell

Daily Field Report

Site:	Ford Rd.	**Date:**	08/30/11 (Tuesday)
Project:	Phase 1 Remedial Action Work	**Time In:**	0700
Project No:	141617	**Time Out:**	1800
BC Personnel:	Bill Foster	**Weather:**	80° Sunny

Items Worked On:

- [x] Mobilization/Demobilization
- [ ] Temporary Erosion and Sedimentation Controls
- [x] Site Preparation
- [ ] Sedimentation Basin Construction
- [ ] Access Road Construction
- [ ] WWTP
- [ ] Cement-Bentonite Slurry Wall Construction
- [ ] North Soil Removal Area
- [ ] South Soil Removal Area
- [ ] River Bank Construction
- [ ] Restoration
- [x] Other - Survey, Weekly Progress Mtg.

Contractor/Subcontractors/Visitors/Alterations:

Contractor(s) - OP-Tech

Subcontractor(s) - Edwards Land clearing, ~~[illegible]~~ Strub Surveying

Visitor(s) - Elena Goodhall, Rick Isaac, Don George, Clarissa Bereby

Phone Call(s) - Elena Goodhall, Rick Isaac

Alteration(s) - N/A

Material Delivered - Stone - #411

Summary of Work:

- On Site
- Safety Mtg.
- Meet w/ Dave to discuss the days workplan.
- Edwards Land clearing is onsite clearing for the South Access Rd.
- Strub Surveying is onsite staking silt fence, Clearing Limits, Sed Basin, etc.
- ~~[illegible]~~ Cat 320D excavator is delivered to the site.
- ~~[illegible]~~ #411 stone is delivered.
- Site trailer is delivered
- We have our first weekly progress Mtg. The abovementioned ~~[illegible]~~ visitors are onsite for the Mtg.
- Rick Isaac + Myself walk the site w/ ~~[illegible]~~ Clarissa.
- Strub is offsite
- Edwards is offsite
- OP-Tech is offsite.
- I leave the site.

Attachments:

- [ ] Contractor Report
- [ ] Field Notes
- [ ] Other:

Bill Foster — 08/30/11

Signature of CQA Monitor — **Date**

Brown AND Caldwell

Daily Field Report

Site:	Ford Rd.	**Date:**	08/31/11 (Wed)
Project:	Phase 1 Remedial Action Work	**Time In:**	0700
Project No:	141617	**Time Out:**	1800
BC Personnel:	Bill Foster	**Weather:**	85° Sunny

Items Worked On:

- ☐ Mobilization/Demobilization
- ☐ Temporary Erosion and Sedimentation Controls
- ☑ Site Preparation
- ☐ Sedimentation Basin Construction
- ☐ Access Road Construction
- ☐ WWTP
- ☐ Cement-Bentonite Slurry Wall Construction
- ☐ North Soil Removal Area
- ☐ South Soil Removal Area
- ☐ River Bank Construction
- ☐ Restoration
- ☑ Other - Survey

Contractor/Subcontractors/Visitors/Alterations:

Contractor(s) - OP Tech
Subcontractor(s) - Edwards, Straub
Visitor(s) - N/A
Phone Call(s) - Elena Goodhall, Rick Isaac, Jim Peepley
Alteration(s) - N/A
Material Delivered - #411 stone

Summary of Work:

- on site
- safety mtg.
- meet w/Dave to discuss the days workplan.
- Edwards is onsite doing site prep/clearing for the south access rd, the sed pond, the lower river rd, the north soil removal area, + the South soil removal area.
- Straub surveying is onsite to finish staking the clearing limits + silt fence.
- #411 stone is delivered to the site.
- Portable restrooms (2 of them) are delivered to the site.
- Straub is offsite
- Edwards is offsite
- OP-Tech is offsite.
- I leave the site.

Attachments:

- ☐ Contractor Report
- ☐ Field Notes
- ☐ Other:

Bill Foster 08/31/11

Signature of CQA Monitor **Date**

Brown AND Caldwell

Daily Field Report

Site:	Ford Rd.	**Date:**	09/01/11 (Thursday)
Project:	Phase 1 Remedial Action Work	**Time In:**	0700
Project No:	141617	**Time Out:**	1800
BC Personnel:	Bill Foster	**Weather:**	85° overcast turning to sunny.

Items Worked On:

- ☐ Mobilization/Demobilization
- ☐ Temporary Erosion and Sedimentation Controls
- ☑ Site Preparation
- ☐ Sedimentation Basin Construction
- ☐ Access Road Construction
- ☐ WWTP
- ☐ Cement-Bentonite Slurry Wall Construction
- ☐ North Soil Removal Area
- ☐ South Soil Removal Area
- ☐ River Bank Construction
- ☐ Restoration
- ☐ Other -

Contractor/Subcontractors/Visitors/Alterations:

Contractor(s) - OP-Tech
Subcontractor(s) - Edwards
Visitor(s) - N/A
Phone Call(s) - Elena Goodwyn, Rick Isaac
Alteration(s) - N/A
Material Delivered - Fill Stone

Summary of Work:

- on site
- Safety mtg.
- Meet w/ Dave to discuss the days workplan.
- Edwards is onsite continuing w/site prep. clearing for the access rd + the soil removal areas.
- Fill stone is delivered to the site.
- OP-Tech has a CAT 740 articulated dump truck delivered to the site.
- OP-Tech has a CAT 287C skid steer w/a CAT BA18 broom attachment delivered.
- OP-Tech sweeps the street.
- Edwards is offsite.
- OP-Tech is offsite.
- I leave the site.

Attachments:

- ☐ Contractor Report
- ☐ Field Notes
- ☐ Other:

Bill Foster — 09/01/11

Signature of CQA Monitor — **Date**

Brown AND Caldwell

Daily Field Report

Site:	Ford Rd.	**Date:**	05/02/11 (Friday)
Project:	Phase 1 Remedial Action Work	**Time In:**	0700
Project No:	141617	**Time Out:**	1700
BC Personnel:	Bill Foster	**Weather:**	85° Sunny

Items Worked On:

- ☐ Mobilization/Demobilization
- ☐ Temporary Erosion and Sedimentation Controls
- ☑ Site Preparation
- ☐ Sedimentation Basin Construction
- ☐ Access Road Construction
- ☐ WWTP
- ☐ Cement-Bentonite Slurry Wall Construction
- ☐ North Soil Removal Area
- ☐ South Soil Removal Area
- ☐ River Bank Construction
- ☐ Restoration
- ☑ Other - Survey

Contractor/Subcontractors/Visitors/Alterations:

Contractor(s) - OP-Tech
Subcontractor(s) - Edwards, Straub
Visitor(s) - N/A
Phone Call(s) - Elena Godhall, Rick Isaac, Jim Peeples
Alteration(s) - N/A
Material Delivered - N/A

Summary of Work:

- on site
- Safety Mtg.
- Meet w/Dave to discuss the days workplan.
- Edwards is onsite finishing up w/site clearing & chipping.
- Straub is onsite to do a preconstruction topo and to stake the ~~[illegible]~~ access rds & soil removal areas.
- Edwards finishes up and demobilizes from the site.
- 4 ~~[illegible]~~ rolls of geotextile ~~[illegible]~~ are delivered.
- I inventory the geotextile.
- Straub is offsite.
- OP-Tech is offsite.
- I leave the site.

Attachments:

- ☐ Contractor Report
- ☐ Field Notes
- ☐ Other:

BW Foster — **Signature of CQA Monitor**

05/02/11 — **Date**

Brown AND Caldwell

Daily Field Report

Site:	Ford Rd.	Date:	09/06/11 (Tuesday)
Project:	Phase 1 Remedial Action Work	Time In:	0700
Project No:	141617	Time Out:	1800
BC Personnel:	Bill Foster, Pete Schlater	Weather:	70° Overcast

Items Worked On:

- ☐ Mobilization/Demobilization
- ☐ Temporary Erosion and Sedimentation Controls
- ☑ Site Preparation
- ☐ Sedimentation Basin Construction
- ☐ Access Road Construction
- ☐ WWTP
- ☐ Cement-Bentonite Slurry Wall Construction
- ☐ North Soil Removal Area
- ☐ South Soil Removal Area
- ☐ River Bank Construction
- ☐ Restoration
- ☑ Other - Well Abandonment

Contractor/Subcontractors/Visitors/Alterations:

- Contractor(s) - OP-Tech
- Subcontractor(s) - Edwards, Straub, TTL
- Visitor(s) - Rick Isaac, Clarissa Gerchy, Vanessa Steigerwald
- Phone Call(s) - Elena Goodhall, Rick Isaac
- Alteration(s) - N/A
- Material Delivered - 30'x30' Piece of 30-mil smooth HDPE geomembrane

- weekly Progress mtg
- Survey

Summary of Work:

- on site
- safety mtg.
- meet w/Joe Nasell: (OP-Tech), to discuss the days workplan.
- Edwards is onsite to finish grinding stumps.
- Straub is onsite to finish the preconstruction topo + finish staking the access rd + the soil removal area.
- We have our second weekly progress mtg. The abovementioned visitors are present.
- Rick, Joe, Clarissa, Vanessa, + myself walk the site after the mtg.
- OP-Tech has a CAT CS 433 E vibratory smooth drum roller delivered.
- TTL is onsite to abandon monitoring wells. Pete Schlater is onsite to provide oversight.
- TTL abandons 2 wells today.
- Straub, Edwards, TTL are offsite.
- OP-Tech is offsite. Pete + I leave the site.

Attachments:

- ☐ Contractor Report
- ☐ Field Notes
- ☐ Other:

Bill Foster — Signature of CQA Monitor

09/06/11 — Date

Brown AND Caldwell

Daily Field Report

Site:	Ford Rd.	**Date:**	09/07/11 (Wed)
Project:	Phase 1 Remedial Action Work	**Time In:**	0700
Project No:	141617	**Time Out:**	1800
BC Personnel:	Bill Foster, Pete Schlater	**Weather:**	70° Overcast

Items Worked On:

- ☐ Mobilization/Demobilization
- ☐ Temporary Erosion and Sedimentation Controls
- ☐ Site Preparation
- ☐ Sedimentation Basin Construction
- ☑ Access Road Construction
- ☐ WWTP
- ☐ Cement-Bentonite Slurry Wall Construction
- ☐ North Soil Removal Area
- ☐ South Soil Removal Area
- ☐ River Bank Construction
- ☐ Restoration
- ☑ Other - Well Abandonment

Contractor/Subcontractors/Visitors/Alterations:

Contractor(s) - OP-Tech

Subcontractor(s) - TTL

Visitor(s) - Brian Holmes (Parks Dept)

Phone Call(s) - Elena Goodhall, Rick Isaac, Jim Peeples

Alteration(s) - N/A

Material Delivered - #304 Stone, #411 Stone, #1 & #2 Stone (for construction entrance)

Summary of Work:

- On site.
- Safety mtg.
- Meet w/Joe to discuss the days workplan.
- TTL is onsite to continue abandoning groundwater wells.
- Pete Schlater is onsite to provide oversight w/the well abandonments.
- OP-Tech is doing some preliminary grading of the south access rd. using onsite soil only.
- TTL abandons the 5 remaining wells.
- TTL is offsite.
- Pete Schlater is offsite.
- #304 & #411 stone is delivered.
- #1 & #2 stone is delivered to enhance the construction entrance, per the Ohio EPA's concern.
- OP-Tech is offsite
- I leave the site.

Attachments:

- ☐ Contractor Report
- ☐ Field Notes
- ☐ Other:

Bill Foster — 09/07/11

Signature of CQA Monitor — **Date**

Brown AND Caldwell

Daily Field Report

Site:	Ford Rd.	**Date:**	09/08/11 (Thursday)
Project:	Phase 1 Remedial Action Work	**Time In:**	0700
Project No:	141617	**Time Out:**	1800
BC Personnel:	Bill Foster	**Weather:**	70° Overcast

Items Worked On:

- ☐ Mobilization/Demobilization
- ☑ Temporary Erosion and Sedimentation Controls
- ☐ Site Preparation
- ☐ Sedimentation Basin Construction
- ☑ Access Road Construction
- ☐ WWTP
- ☐ Cement-Bentonite Slurry Wall Construction
- ☐ North Soil Removal Area
- ☐ South Soil Removal Area
- ☐ River Bank Construction
- ☐ Restoration
- ☐ Other -

Contractor/Subcontractors/Visitors/Alterations:

Contractor(s) - OP-Tech
Subcontractor(s) - Mortons Landscape Dev. Co.
Visitor(s) - Nate Givens (Brown and Caldwell)
Phone Call(s) - Elena Goodhall, Rick Isaac
Alteration(s) - N/A
Material Delivered - #304/#411 Stone #1 + #2 Stone

Summary of Work:

- on site
- safety mtg.
- meet w/Joe to discuss the days workplan.
- Mortons Landscape Development Company is onsite to begin installing silt fence.
- OP-Tech cuts one foot of soil off the access rd, from the top of slope to the approx location of the emergency spillway.
- OP-Tech places geotextile, prior to placing #1 + #2 stone, They place approx. one foot of #1 + #2 stone, + they place approx. 30'.
- OP-Tech ~~[illegible]~~ starts the geotextile where MW-5 is located.
- Mortons is offsite.
- OP-Tech is offsite.
- I leave the site.

one-foot (thick)
thirty feet (horiz)

Attachments:

- ☐ Contractor Report
- ☐ Field Notes
- ☐ Other:

Bill Foster — Signature of CQA Monitor

09/08/11 — Date

Brown AND Caldwell

Daily Field Report

Site:	Ford Rd.	**Date:**	09/09/11 (Friday)
Project:	Phase 1 Remedial Action Work	**Time In:**	0700
Project No:	141617	**Time Out:**	1800
BC Personnel:	Bill Foster	**Weather:**	70° overcast

Items Worked On:

- ☐ Mobilization/Demobilization
- ☑ Temporary Erosion and Sedimentation Controls
- ☐ Site Preparation
- ☐ Sedimentation Basin Construction
- ☑ Access Road Construction
- ☐ WWTP
- ☐ Cement-Bentonite Slurry Wall Construction
- ☐ North Soil Removal Area
- ☐ South Soil Removal Area
- ☐ River Bank Construction
- ☐ Restoration
- ☑ Other - Survey

Contractor/Subcontractors/Visitors/Alterations:

Contractor(s) - OP-Tech

Subcontractor(s) - Mortons, Straub

Visitor(s) -

Phone Call(s) - Elena Goodhall, Rick Isaac

Alteration(s) - N/A

Material Delivered - #1 & #2 Stone

Summary of Work:

- on site
- safety mtg.
- Meet w/Joe to discuss the days workplan.
- Mortons is onsite to finish installing the silt fence.
- Straub is onsite to finish staking the temp. access rd.
- OP-Tech is working on the south access rd. Placing geotextile, then #1 & #2 Stone.
- Straub also staked the principle spillway of the sed. basin.
- Straub is offsite.
- Mortons finished installing silt fence & is offsite.
- OP-Tech is offsite
- I leave the site

Attachments:

- ☐ Contractor Report
- ☐ Field Notes
- ☐ Other:

Bill Foster — 09/09/11

Signature of CQA Monitor — **Date**

Brown AND Caldwell

Daily Field Report

Site:	Ford Rd.	**Date:**	09/12/11 (Monday)
Project:	Phase 1 Remedial Action Work	**Time In:**	0700
Project No:	141617	**Time Out:**	1800
BC Personnel:	Bill Foster	**Weather:**	80° P. Cloudy

Items Worked On:

- ☐ Mobilization/Demobilization
- ☐ Temporary Erosion and Sedimentation Controls
- ☐ Site Preparation
- ☐ Sedimentation Basin Construction
- ☑ Access Road Construction
- ☑ WWTP - Build Pad (if needed)
- ☐ Cement-Bentonite Slurry Wall Construction
- ☐ North Soil Removal Area
- ☐ South Soil Removal Area
- ☐ River Bank Construction
- ☐ Restoration
- ☑ Other - upper area material staging area pads

Contractor/Subcontractors/Visitors/Alterations:

Contractor(s) - OP-Tech

Subcontractor(s) - N/A

Visitor(s) - Vanessa Steigerwald, Rich Malta, Aaron Farrell - Material Delivery

Phone Call(s) - Elena Goodhall, Rick Isaac

Alteration(s) - N/A

Material Delivered - Steep slope fill

OP-Tech ~~[illegible]~~ Health & Safety Days

Summary of Work:

- on site
- safety mtg.
- meet w/Dave to discuss the days workplan.
- OP-Tech is having steep slope fill delivered to the site.
- OP-Tech is working on the south access rd. They are placing geotextile + dense aggregate (per specs).
- They are finishing up the point where the ex. roadway is already @ grade. OP-Tech smooth drums the aggregate.
- OP-Tech is building the upper area material staging area pads.
- Vanessa Steigerwald is onsite. I walk the site w/her. She checks to make sure silt fence + construction entrance have been installed/fixed.
- Vanessa leaves the site.
- OP-Tech is offsite.
- I leave the site.

Attachments:

- ☐ Contractor Report
- ☐ Field Notes
- ☐ Other:

Bill Foster — 09/12/11

Signature of CQA Monitor — **Date**

Brown AND Caldwell

Daily Field Report

Site:	Ford Rd.	Date:	09/13/11 (Tuesday)
Project:	Phase 1 Remedial Action Work	Time In:	0700
Project No:	141617	Time Out:	1900
BC Personnel:	Bill Foster	Weather:	80° Sunny

Items Worked On:

- ☐ Mobilization/Demobilization
- ☐ Temporary Erosion and Sedimentation Controls
- ☐ Site Preparation
- ☐ Sedimentation Basin Construction
- ☒ Access Road Construction
- ☒ WWTP - Build Pad
- ☐ Cement-Bentonite Slurry Wall Construction
- ☐ North Soil Removal Area
- ☐ South Soil Removal Area
- ☐ River Bank Construction
- ☐ Restoration
- ☒ Other - Build Pads for upper area material staging.
  - weekly Progress mtg.
  - Frac tanks delivered
  - Fuel tank delivered

Contractor/Subcontractors/Visitors/Alterations:

Contractor(s) - OP-Tech
Subcontractor(s) - N/A
Visitor(s) - Elena Goodhall, Joe Montello, Brian Holmes
Phone Call(s) - Elena Goodhall, Rick Isaac
Alteration(s) - N/A
Material Delivered - Steep Slope Fill

Summary of Work:

- On site
- Safety mtg.
- Meet w/Dave to discuss the days workplan.
- OP-Tech is having steep slope fill delivered.
- OP-Tech is constructing the access rd. (per specs)
- Two frac tanks are delivered
- A fuel tank is delivered. A CAT 725 Articulated Dumptruck is delivered. The CAT 740 is taken offsite
- OP-Tech finishes building the pads/berms for the upper area material staging.
- OP-Tech clears out an area + smoothes out a pad for the WWTP.
- We have the weekly progress mtg. The abovementioned visitors, as well as Dave + myself are present for the mtg. Others call in.
- OP-Tech continues to work on the access rd/sub basin berm.
- OP-Tech is offsite.
- I leave the site.

Attachments:

- ☐ Contractor Report
- ☐ Field Notes
- ☐ Other:

Bill Foster — Signature of CQA Monitor

09/13/11 — Date

Brown AND Caldwell

Daily Field Report

Site:	Ford Rd.	**Date:**	09/14/11 (Wed)
Project:	Phase 1 Remedial Action Work	**Time In:**	0700
Project No:	141617	**Time Out:**	2000
BC Personnel:	Bill Foster	**Weather:**	70° Sunny

Items Worked On:

- ☐ Mobilization/Demobilization
- ☐ Temporary Erosion and Sedimentation Controls
- ☐ Site Preparation
- ☑ Sedimentation Basin Construction - Berm
- ☑ Access Road Construction
- ☑ WWTP - Delivery + set up
- ☐ Cement-Bentonite Slurry Wall Construction
- ☐ North Soil Removal Area
- ☐ South Soil Removal Area
- ☐ River Bank Construction
- ☐ Restoration
- ☑ Other - level out a spot for dewatering pad.

Contractor/Subcontractors/Visitors/Alterations:

Contractor(s) - OP-Tech

Subcontractor(s) - N/A

Visitor(s) - N/A

Phone Call(s) - Elena Goodhall, Rick Isaac

Alteration(s) - N/A

Material Delivered - steep slope Fill

Summary of Work:

- on site
- safety mtg.
- meet w/Dave to discuss the days workplan.
- The WWTP is delivered.
- Steep slope Fill is being delivered.
- OP-Tech is constructing the access rd/sed basin berm, to provide access to the north soil removal area.
- OP-Tech is getting the WWTP hooked up
- OP-Tech has a CAT CS 56 vibratory smooth ~~drum~~ drum delivered & sends the CAT CS 433E offsite
- OP-Tech has a CAT TL1255 Telehandler forklift delivered.
- OP-Tech ~~[illegible]~~ builds an area to place the dewatering pad.
- OP-Tech begins removing a couple of feet of overburden from the north soil removal area. It is placed @ the toe of the slope.
- OP-Tech is offsite. I leave the site.

Attachments:

- ☐ Contractor Report
- ☐ Field Notes
- ☐ Other:

Signature of CQA Monitor: [signature] Date: 09/14/11

Brown AND Caldwell

Daily Field Report

Site:	Ford Rd.	**Date:**	09/15/11 (Thursday)
Project:	Phase 1 Remedial Action Work	**Time In:**	0700
Project No:	141617	**Time Out:**	1800
BC Personnel:	Bill Foster	**Weather:**	60° overcast

Items Worked On:

- ☐ Mobilization/Demobilization
- ☐ Temporary Erosion and Sedimentation Controls
- ☐ Site Preparation
- ☐ Sedimentation Basin Construction
- ☐ Access Road Construction
- ☑ WWTP - Finish hooking up
- ☐ Cement-Bentonite Slurry Wall Construction
- ☐ North Soil Removal Area
- ☐ South Soil Removal Area
- ☐ River Bank Construction
- ☐ Restoration
- ☑ Other - Install dewatering pad

Contractor/Subcontractors/Visitors/Alterations:

Contractor(s) - OP-Tech

Subcontractor(s) - Slurry Solutions, Inc.

Visitor(s) - N/A

Phone Call(s) - Elena Goodhall, Rick Isaac

Alteration(s) - N/A

Material Delivered - #411, Sand

Summary of Work:

- on site
- safety mtg.
- meet w/Dave to discuss the days workplan.
- OP-Tech begins prepping the subgrade in order to construct the dewatering pad.
- OP-Tech is having #411 stone & sand delivered today.
- The sand will be used to fill the super sacks.
- Slurry Solutions, Inc is onsite. They have bentonite & cement delivered. We discuss the approach to the slurry wall.
- OP-Tech builds the dewatering pad & installs the 30-mil geomembrane liner.
- OP-Tech installs plastic in one of the upper area material staging pads.
- Slurry Solutions is offsite.
- OP-Tech is offsite.
- I leave the site

Attachments:

- ☐ Contractor Report
- ☐ Field Notes
- ☐ Other:

BN [illegible] 09/15/11

Signature of CQA Monitor **Date**

Brown AND Caldwell

Daily Field Report

Site:	Ford Rd.	**Date:**	09/16/11 (Friday)
Project:	Phase 1 Remedial Action Work	**Time In:**	0700
Project No:	141617	**Time Out:**	1800
BC Personnel:	Bill Foster	**Weather:**	60° P. Sunny

Items Worked On:

- ☐ Mobilization/Demobilization
- ☐ Temporary Erosion and Sedimentation Controls
- ☐ Site Preparation
- ☐ Sedimentation Basin Construction
- ☐ Access Road Construction
- ☒ WWTP - Hook up + Inspected
- ☐ Cement-Bentonite Slurry Wall Construction
- ☐ North Soil Removal Area
- ☐ South Soil Removal Area
- ☐ River Bank Construction
- ☐ Restoration
- ☒ Other - Finish dewatering pad - set up batch plant

Contractor/Subcontractors/Visitors/Alterations:

Contractor(s) - OP-Tech

Subcontractor(s) - Slurry Solutions

Visitor(s) - Roger Lehman (Elyria Water Dept), Elyria POTW

Phone Call(s) - Elena Goodhall, Rick Isaac

Alteration(s) - N/A

Material Delivered - #411 stone, Sand

Summary of Work:

- on site
- safety mtg.
- meet w/Dave to discuss the days workplan.
- Slurry Solutions is onSite setting up the batch plant.
- Elyria Water Dept. inspects the backflow preventer, they approve it.
- OP-Tech finishes the dewatering pad, installing the sump.
- OP-Tech finishes hooking up the WWTP.
- Slurry Solutions is offsite, they will be back Monday morning.
- Elyria POTW inspect the WWTP. Prior to approval they want the wastewater ~~[illegible]~~ created by the Slurry process sampled. Once the samples are tested, they will give approval, based upon those results being ok. Samples will be taken on Monday.
- OP-Tech is offsite
- I leave the site.

Attachments:

- ☐ Contractor Report
- ☐ Field Notes
- ☐ Other:

Bill Foster 09/16/11

Signature of CQA Monitor **Date**

Brown AND Caldwell

Daily Field Report

Site:	Ford Rd.	Date:	09/19/11 (Monday)
Project:	Phase 1 Remedial Action Work	Time In:	0700
Project No:	141617	Time Out:	1800
BC Personnel:	Bill Foster	Weather:	70° Rain

Items Worked On:

- ☐ Mobilization/Demobilization
- ☐ Temporary Erosion and Sedimentation Controls
- ☐ Site Preparation
- ☐ Sedimentation Basin Construction
- ☒ Access Road Construction — smooth drum previously deployed soil.
- ☐ WWTP
- ☐ Cement-Bentonite Slurry Wall Construction
- ☐ North Soil Removal Area
- ☐ South Soil Removal Area
- ☐ River Bank Construction
- ☐ Restoration
- ☒ Other - Excavate/Install slury wall

Contractor/Subcontractors/Visitors/Alterations:

Contractor(s) - OP-Tech

Subcontractor(s) - Slurry Solutions, Inc.

Visitor(s) - N/A

Phone Call(s) - Elena Goodholl, Rich Isaac, Jim Peeples, Joe Nodelli.

Alteration(s) - N/A

Material Delivered - #411 stone, steep slope fill

- Install plastic in the other upper material storage area pad.
- CAT 950D Front End Loader is delivered
- Water Truck is delivered.

Summary of Work:

- on site
- safety mtg
- meet w/bare + discuss the days workplan.
- Slurry Solutions is onsite prepping to begin constructing the slurry wall.
- OP-Tech sets grade stakes every 20 feet along the center of the slurry wall. They are placed @ 10' offsets to the c/l of the slurry wall.
- OP-Tech installs plastic in the other upper surface material staging area. They install 2 layers of plastic.
- Begin excavating/constructing the slurry wall. I observe (visually) + take soil reading w/ the PID. Any readings over 50 ppm will be taken to the upper surface staging area.
- Approx 110 feet of slurry wall is excavated/installed today. Most material went to the toe of slope (under 50 ppm on PID), some went up top to the staging area.
- Slurry Solutions + OP-Tech are offsite.
- I leave the site.

- slurry wall work plan is followed.

- Excavation taped off @ end of day.

Attachments:

- ☐ Contractor Report
- ☐ Field Notes
- ☐ Other:

Signature of CQA Monitor: BN [illegible] Date: 09/19/11

Brown AND Caldwell

Daily Field Report

Site:	Ford Rd.	**Date:**	09/19/11 (Monday)
Project:	Phase 1 Remedial Action Work	**Time In:**	0700
Project No:	141617	**Time Out:**	1800
BC Personnel:	Bill Foster	**Weather:**	70° Rainy

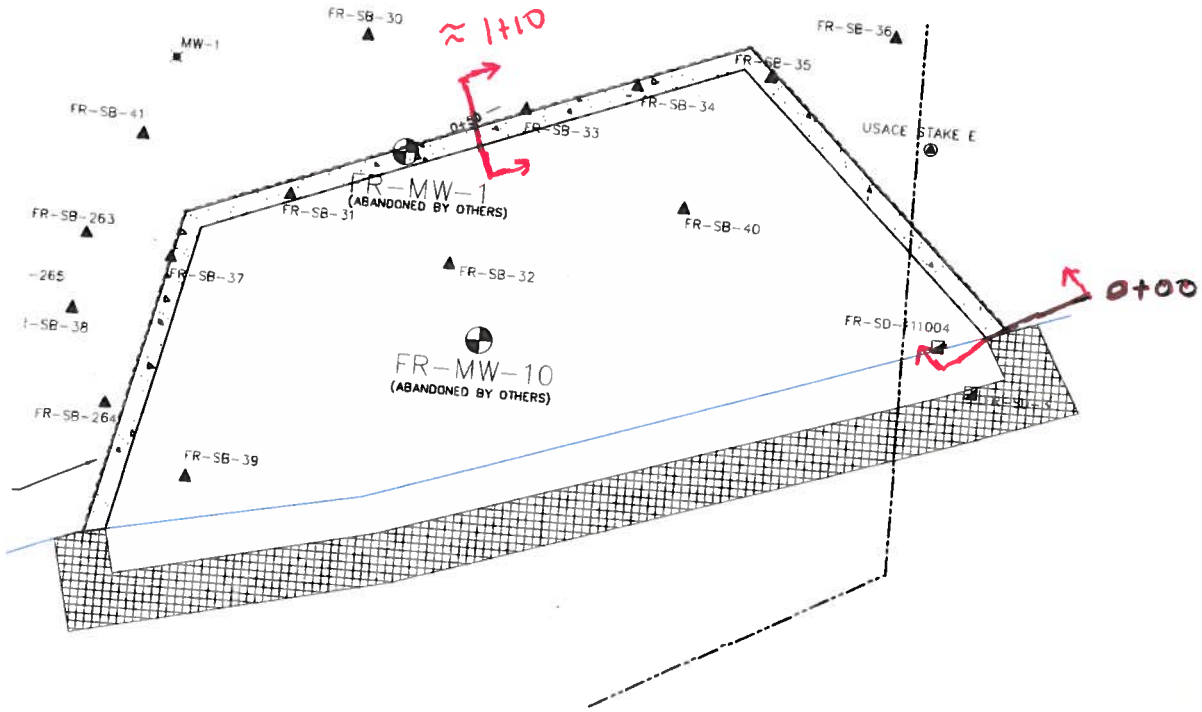

Attachments:

- ☐ Contractor Report
- ☐ Field Notes
- ☐ Other:

Bill Foster — 09/19/11

Signature of CQA Monitor — **Date**

Brown AND Caldwell

Daily Field Report

Site:	Ford Rd.	**Date:**	09/20/11 (Tuesday)
Project:	Phase 1 Remedial Action Work	**Time In:**	0700
Project No:	141617	**Time Out:**	1800
BC Personnel:	Bill Foster	**Weather:**	70° Cloudy

Items Worked On:

- ☐ Mobilization/Demobilization
- ☐ Temporary Erosion and Sedimentation Controls
- ☐ Site Preparation
- ☐ Sedimentation Basin Construction
- ☑ Access Road Construction → Maintenance
- ☐ WWTP
- ☐ Cement-Bentonite Slurry Wall Construction
- ☐ North Soil Removal Area
- ☐ South Soil Removal Area
- ☐ River Bank Construction
- ☐ Restoration
- ☑ Other - slurry wall

Contractor/Subcontractors/Visitors/Alterations:

Contractor(s) - OP-Tech

Subcontractor(s) - Slurry Solutions, Inc.

Visitor(s) - Bill Fredericks, Elena Goodhall, Clarissa Gereby

Phone Call(s) - Elena Goodhall, Rich Isaac

Alteration(s) - N/A

Material Delivered - #411 stone

Summary of Work:

- on site
- Safety mtg
- meet w/Dave to discuss the days workplan.
- Slurry Solutions is onsite to continue installing the slurry wall.
- OP-Tech digs the trench for the slurry wall.
- The slurry wall workplan is followed during construction of the slurry wall.
- All wet material excavated is placed in the dewatering pad.
- All material ≥ 50 ppm (PID) is taken to the upper surface staging area. All material < 50 ppm (PID) is taken to the toe of slope.
- Bill Frederick, Elena Goodhall, + Clarissa Gereby are onsite.
- We have the weekly progress mtg.
- Approx. 75 feet of slurry wall is excavated/installed today. Excavation is ~~stopping~~ taped off @ the end of the day.
- Slurry Solutions + OP-Tech are offsite.
- I leave the site.

Attachments:

- ☐ Contractor Report
- ☐ Field Notes
- ☐ Other:

BN Foster — 09/20/11

Signature of CQA Monitor — **Date**

Brown AND Caldwell

Daily Field Report

Site:	Ford Rd.	**Date:**	09/20/11 (Tuesday)
Project:	Phase 1 Remedial Action Work	**Time In:**	0700
Project No:	141617	**Time Out:**	1800
BC Personnel:	Bill Foster	**Weather:**	70° Cloudy

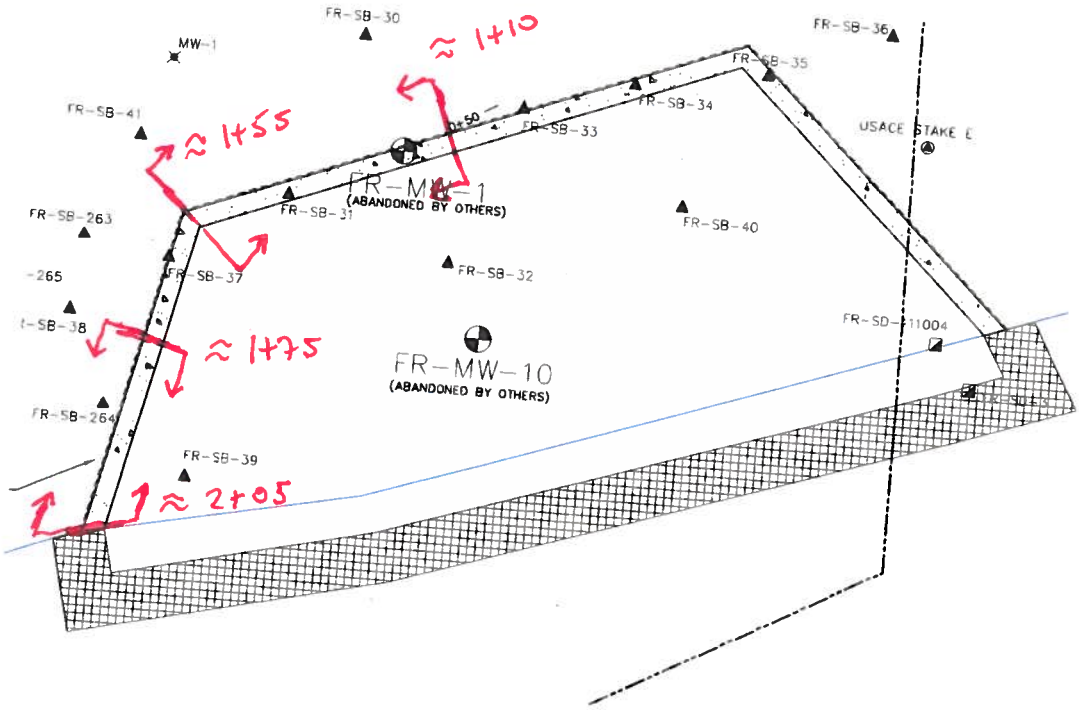

Attachments:

- ☐ Contractor Report
- ☐ Field Notes
- ☐ Other:

Bill Foster — Signature of CQA Monitor

09/20/11 — Date

Brown AND Caldwell

Daily Field Report

Site:	Ford Rd.	Date:	09/21/11 (Wed)
Project:	Phase 1 Remedial Action Work	Time In:	0700
Project No:	141617	Time Out:	1600
BC Personnel:	Bill Foster	Weather:	70° Rain

Items Worked On:

- ☐ Mobilization/Demobilization
- ☐ Temporary Erosion and Sedimentation Controls
- ☐ Site Preparation
- ☐ Sedimentation Basin Construction
- ☐ Access Road Construction
- ☐ WWTP
- ☐ Cement-Bentonite Slurry Wall Construction
- ☐ North Soil Removal Area
- ☐ South Soil Removal Area
- ☐ River Bank Construction
- ☐ Restoration
- ☑ Other - Slurry Wall

Contractor/Subcontractors/Visitors/Alterations:

Contractor(s) - OP-Tech

Subcontractor(s) - Slurry Solutions, Inc

Visitor(s) - Bill Frederick, Joe Montello

Phone Call(s) - Elena Goodhall, Rick Isaac

Alteration(s) - N/A

Material Delivered - #304 stone, steep slope fill

Summary of Work:

- on site
- safety mtg.
- meet w/Dave to discuss the days workplan.
- Slurry Solutions is onsite to finish the slurry wall.
- Bill Frederick is onsite to provide oversight.
- OP-Tech digs the trench for the slurry wall.
- The slurry wall workplan is followed for construction of the slurry wall.
- All wet material goes to the dewatering pad. All material ≥ 50 ppm (PID) goes to the upper surface staging area. All material < 50 ppm goes to the toe of slope
- Joe Montello is onsite to observe.
- Approx 20 feet of slurry wall is excavated/installed today. Excavation is topped off @ end of the day.
- Slurry Solutions is offsite.
- OP-Tech is offsite.
- I leave the site.

Attachments:

- ☐ Contractor Report
- ☐ Field Notes
- ☐ Other:

Bill Foster — 09/21/11

Signature of CQA Monitor — Date

Brown AND Caldwell

Daily Field Report

Site:	Ford Rd.	**Date:**	09/21/11 (Wed)
Project:	Phase 1 Remedial Action Work	**Time In:**	0700
Project No:	141617	**Time Out:**	1600
BC Personnel:	Bill Foster	**Weather:**	70° Rain

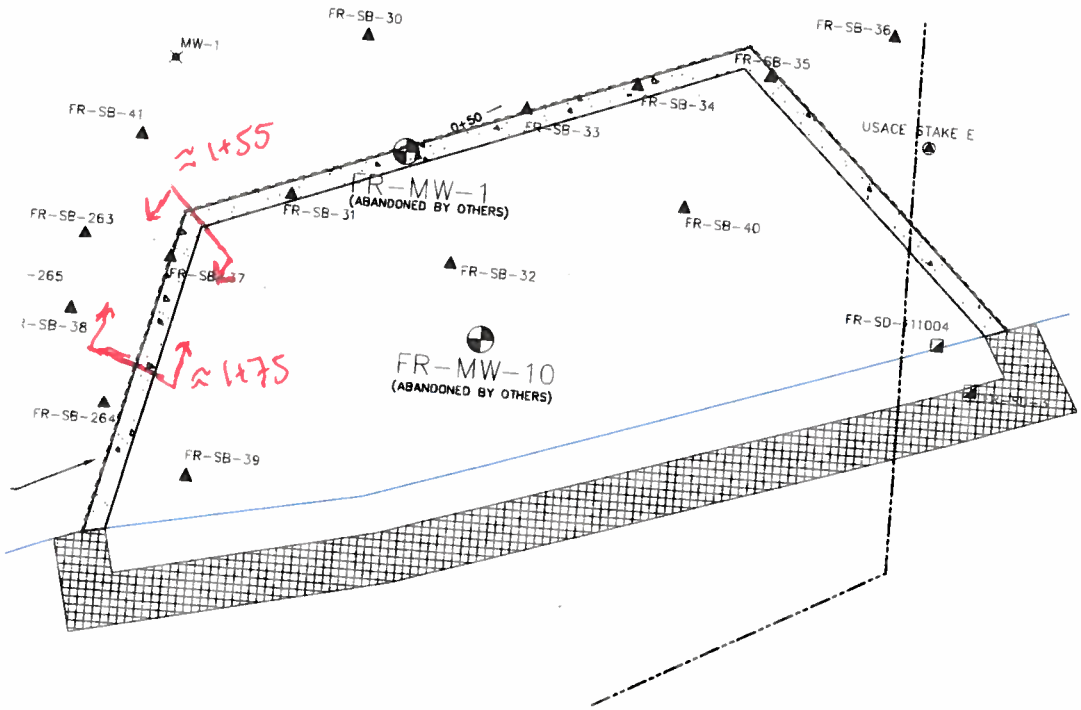

Attachments:

- ☐ Contractor Report
- ☐ Field Notes
- ☐ Other:

Bill Foster — 09/21/11

Signature of CQA Monitor — **Date**

Brown AND Caldwell

Daily Field Report

Site:	Ford Rd.	Date:	09/22/11 (Thursday)
Project:	Phase 1 Remedial Action Work	Time In:	0700
Project No:	141617	Time Out:	1700
BC Personnel:	Bill Foster	Weather:	75° P. Sunny

Items Worked On:

- [x] Mobilization/Demobilization - Slurry Solutions
- [ ] Temporary Erosion and Sedimentation Controls
- [ ] Site Preparation
- [ ] Sedimentation Basin Construction
- [ ] Access Road Construction
- [ ] WWTP
- [ ] Cement-Bentonite Slurry Wall Construction
- [ ] North Soil Removal Area
- [ ] South Soil Removal Area
- [ ] River Bank Construction
- [ ] Restoration
- [ ] Other -

Contractor/Subcontractors/Visitors/Alterations:

Contractor(s) - OP-Tech
Subcontractor(s) - Slurry Solutions
Visitor(s) - N/A
Phone Call(s) - Elena Goodhall, Rick Isaac
Alteration(s) - N/A
Material Delivered - #411 Stone

Summary of Work:

- on site
- Safety mtg.
- meet w/Dave to discuss the days workplan.
- OP-Tech is demobilizing slurry solutions.
- Due to all the rain we got yesterday & last night, all of slurry solutions equipment must be pulled out w/an excavator. This is time consuming!
- The rest of the site is a sloppy mess. OP-Tech will only make things worse if they try to do any work today.
- OP-Tech repairs any damaged silt fence from the rain yesterday
- OP-Tech is offsite.
- I leave the site.

Attachments:

- [ ] Contractor Report
- [ ] Field Notes
- [ ] Other:

Bill Foster — 09/22/11

Signature of CQA Monitor — Date

Brown AND Caldwell

Daily Field Report

Site:	Ford Rd.	Date:	09/26/11 (Monday)
Project:	Phase 1 Remedial Action Work	Time In:	0700
Project No:	141617	Time Out:	1400
BC Personnel:	Bill Foster	Weather:	70° Overcast/Rainy

Items Worked On:

- ☐ Mobilization/Demobilization
- ☐ Temporary Erosion and Sedimentation Controls
- ☐ Site Preparation
- ☐ Sedimentation Basin Construction
- ☐ Access Road Construction
- ☐ WWTP
- ☐ Cement-Bentonite Slurry Wall Construction
- ☐ North Soil Removal Area
- ☐ South Soil Removal Area
- ☐ River Bank Construction
- ☐ Restoration
- ☒ Other - Fill Sandbags - Pump bleedwater from top of slurry wall.

Contractor/Subcontractors/Visitors/Alterations:

Contractor(s) - OP-Tech
Subcontractor(s) - N/A
Visitor(s) - N/A
Phone Call(s) - Elena Goodhall, Rick Isaac
Alteration(s) - N/A
Material Delivered - N/A

Summary of Work:

- on site
- safety mtg.
- meet w/Dave to discuss the days workplan.
- OP-Tech is cleaning up the contractor staging area.
- The site is a muddy mess, from all the rain.
- I walk the silt fence to inspect it. Not damaged.
- I also check out the slurry wall to inspect it as well. O.K.
- OP-Tech is filling the super sack sandbags. They pump the bleedwater from the slurry wall.
- It begins to rain.
- OP-Tech isn't doing any work that I need to be here overseeing, so I leave the site & head back to the office

Attachments:

- ☐ Contractor Report
- ☐ Field Notes
- ☐ Other:

Signature of CQA Monitor: [signature] Date: 09/26/11

Brown AND Caldwell

Daily Field Report

Site:	Ford Rd.	**Date:**	09/27/11 (Tuesday)
Project:	Phase 1 Remedial Action Work	**Time In:**	0700
Project No:	141617	**Time Out:**	1700
BC Personnel:	Bill Foster	**Weather:**	70° Sunny

Items Worked On:

- ☐ Mobilization/Demobilization
- ☐ Temporary Erosion and Sedimentation Controls
- ☐ Site Preparation
- ☐ Sedimentation Basin Construction
- ☐ Access Road Construction
- ☐ WWTP
- ☐ Cement-Bentonite Slurry Wall Construction
- ☐ North Soil Removal Area
- ☐ South Soil Removal Area
- ☐ River Bank Construction
- ☐ Restoration
- ☑ Other - Fill Super Sack Sandbags - Maintenance of slurry wall (Pump bleed water)

Contractor/Subcontractors/Visitors/Alterations:

Contractor(s) - OP-Tech
Subcontractor(s) - N/A
Visitor(s) - Rick Isaac, Clarissa Gereby, Matt Spronz
Phone Call(s) - Rick Isaac, Elena Goodhall
Alteration(s) - N/A
Material Delivered - N/A

Summary of Work:

- on site
- Safety mtg
- meet w/Dave to discuss the days workplan.
- OP-Tech is pumping bleedwater from the slurry wall to the poly tank. It will then be pumped uphill to the WWTP.
- Rick Isaac is onsite. We walk the site before the weekly progress mtg.
- Clarissa Gereby is onsite. Rich + I walk the site w/her.
- We have the weekly progress mtg.
- After the mtg., I take clarissa + Matt Spronz for a walk of the site.
- Rick, Clarissa, + Matt are offsite.
- OP-Tech continues filling the super sack sandbags.
- OP-Tech is offsite.
- I leave the site.

Attachments:

- ☐ Contractor Report
- ☐ Field Notes
- ☐ Other:

Bill Foster — 09/27/11

Signature of CQA Monitor — **Date**

Brown AND Caldwell

Daily Field Report

Site:	Ford Rd.	**Date:**	09/30/11 (Friday)
Project:	Phase 1 Remedial Action Work	**Time In:**	0700
Project No:	141617	**Time Out:**	1500
BC Personnel:	Bill Foster	**Weather:**	60° Rainy

Items Worked On:

- ☐ Mobilization/Demobilization
- ☐ Temporary Erosion and Sedimentation Controls
- ☐ Site Preparation
- ☐ Sedimentation Basin Construction
- ☐ Access Road Construction
- ☐ WWTP
- ☐ Cement-Bentonite Slurry Wall Construction
- ☐ North Soil Removal Area
- ☐ South Soil Removal Area
- ☐ River Bank Construction
- ☐ Restoration
- ☑ Other - slurry wall maintenance (pump bleed/surface water)

Contractor/Subcontractors/Visitors/Alterations:

Contractor(s) - OP-Tech

Subcontractor(s) - N/A

Visitor(s) - N/A

Phone Call(s) - Elena Lundhall, Rick Isaac, Jim Peeples, Joe Novell.

Alteration(s) - N/A

Material Delivered - N/A

Summary of Work:

- on site
- safety mtg.
- Meet w/Dave to discuss the days workplan.
- Dave + I ~~bleed~~ pump the surface water from the slurry wall. It is pumped into a poly tank, which is pumped to the WWTP, once it is full.
- Dave and I walk the silt fence to check for damages. No damages are found.
- Dave and I discuss the layout of the proposed new access rd, that will be upslope from the sed. basin.
- OP-Tech is offsite.
- I move the absorbent sock from the end of the south wing wall to the ~~[illegible]~~ other corner of the south wing wall.
- I pump the surface water one last time before leaving the site.

Attachments:

- ☐ Contractor Report
- ☐ Field Notes
- ☐ Other:

Bill Foster — 09/30/11

Signature of CQA Monitor — **Date**

Brown AND Caldwell

Daily Field Report

Site:	Ford Rd.	**Date:**	10/03/11 (Monday)
Project:	Phase 1 Remedial Action Work	**Time In:**	0700
Project No:	141617	**Time Out:**	1700
BC Personnel:	Bill Foster	**Weather:**	60° Rainy

Items Worked On:

- ☐ Mobilization/Demobilization
- ☐ Temporary Erosion and Sedimentation Controls
- ☐ Site Preparation
- ☐ Sedimentation Basin Construction
- ☐ Access Road Construction
- ☐ WWTP
- ☐ Cement-Bentonite Slurry Wall Construction
- ☐ North Soil Removal Area
- ☐ South Soil Removal Area
- ☐ River Bank Construction
- ☐ Restoration
- ☑ Other - Pump water from:
  - Slurry wall
  - Access Rd
  - Dewatering Pad
  - upper surface staging area.
  - Fill super sack sandbags

Contractor/Subcontractors/Visitors/Alterations:

Contractor(s) - OP-Tech

Subcontractor(s) - N/A

Visitor(s) - Rick Isaac, Liz Vaughan

Phone Call(s) - Elena Goodhall, Rick Isaac

Alteration(s) - N/A

Material Delivered - N/A

Summary of Work:

- on site
- safety mtg
- meet w/Dave to discuss the days workplan.
- OP-Tech pumps the water from the slurry wall, the dewatering pad, the lower river access rd, & the upper surface staging area.
- OP-Tech begins filling super sack sandbags.
- Rick Isaac & Liz Vaughan are onsite.
- Rick, Liz, & I walk to the slurry wall & check it out.
- Rick & Liz are offsite.
- OP-Tech is offsite.
- I leave the site.

Attachments:

- ☐ Contractor Report
- ☐ Field Notes
- ☐ Other:

Bill Foster 10/03/11

Signature of CQA Monitor **Date**

Brown AND Caldwell

Daily Field Report

Site:	Ford Rd.	Date:	10/04/11 (Tuesday)
Project:	Phase 1 Remedial Action Work	Time In:	0700
Project No:	141617	Time Out:	1800
BC Personnel:	Bill Foster	Weather:	70° Sunny

Items Worked On:

- ☐ Mobilization/Demobilization
- ☐ Temporary Erosion and Sedimentation Controls
- ☐ Site Preparation
- ☐ Sedimentation Basin Construction
- ☑ Access Road Construction
- ☐ WWTP
- ☐ Cement-Bentonite Slurry Wall Construction
- ☐ North Soil Removal Area
- ☐ South Soil Removal Area
- ☐ River Bank Construction
- ☐ Restoration
- ☑ Other - Progress Mtg.
  - Temp. Drainage
  - Pump water from slurry wall
  - Fill sand Bags

Contractor/Subcontractors/Visitors/Alterations:

Contractor(s) - OP-Tech
Subcontractor(s) - N/A
Visitor(s) - N/A
Phone Call(s) - Elena Goodhall, Rick Isaac
Alteration(s) - N/A
Material Delivered - N/A

Summary of Work:

- on site
- safety mtg.
- meet w/Dave to discuss the days workplan.
- OP-Tech continue maintenance of the slurry wall.
- OP-Tech is working on cutting the upper access rd.
- Weekly Progress Mtg. Dave + I are the only ones to attend the mtg., everyone else calls in.
- OP-Tech works on Temp. drainage.
- OP-Tech continues filling sand bags.
- OP-Tech finishes + is offsite
- I leave the site.

Attachments:

- ☐ Contractor Report
- ☐ Field Notes
- ☐ Other:

Bill Foster — 10/04/11

Signature of CQA Monitor — Date

Brown AND Caldwell

Daily Field Report

Site:	Ford Rd.	Date:	10/05/11 (Wed)
Project:	Phase 1 Remedial Action Work	Time In:	0700
Project No:	141617	Time Out:	1730
BC Personnel:	Bill Foster	Weather:	70° Sunny

Items Worked On:

- ☐ Mobilization/Demobilization
- ☐ Temporary Erosion and Sedimentation Controls
- ☐ Site Preparation
- ☑ Sedimentation Basin Construction - Grading floor & north end.
- ☑ Access Road Construction
- ☐ WWTP
- ☑ Cement-Bentonite Slurry Wall ~~Construction~~ maintenance
- ☐ North Soil Removal Area
- ☐ South Soil Removal Area
- ☐ River Bank Construction
- ☐ Restoration
- ☑ Other - Fill Sand bags - Temp. Drainage

Contractor/Subcontractors/Visitors/Alterations:

Contractor(s) - OP-Tech
Subcontractor(s) - N/A
Visitor(s) - Jerry Parker
Phone Call(s) - Elena Goodwell, Rick Isaac
Alteration(s) - N/A
Material Delivered - N/A

Summary of Work:

- on Site
- Safety Mtg.
- Meet w/Dave to discuss the days workplan.
- OP-Tech continues working on the upper access rd.
- OP-Tech continues filling sand bags.
- OP-Tech continues to pump water from the slurry wall, when needed.
- Jerry Parker is onsite, Dave shows him around.
- Jerry Parker is offsite.
- OP-Tech is working on Temp. drainage.
- OP-Tech begins pushing soil on the floor of the sed basin, & the north tip.
- OP-Tech is offsite.
- I leave the site.

Attachments:

- ☐ Contractor Report
- ☐ Field Notes
- ☐ Other:

Bill Foster 10/05/11

Signature of CQA Monitor — Date

Brown AND Caldwell

Daily Field Report

Site:	Ford Rd.	**Date:**	10/06/11 (Thursday)
Project:	Phase 1 Remedial Action Work	**Time In:**	0700
Project No:	141617	**Time Out:**	1700
BC Personnel:	Bill Foster	**Weather:**	70° Sunny

Items Worked On:

- ☐ Mobilization/Demobilization
- ☑ Temporary Erosion and Sedimentation Controls
- ☐ Site Preparation
- ☐ Sedimentation Basin Construction
- ☑ Access Road Construction
- ☐ WWTP
- ☑ Cement-Bentonite Slurry Wall ~~Construction~~ Maintenance
- ☐ North Soil Removal Area
- ☐ South Soil Removal Area
- ☐ River Bank Construction
- ☐ Restoration
- ☑ Other - Material Delivery - Sand

Contractor/Subcontractors/Visitors/Alterations:

Contractor(s) - OP-Tech
Subcontractor(s) - N/A
Visitor(s) - Elena Goodhall, Joe Warburton
Phone Call(s) - Elena Goodhall, Rick Isaac
Alteration(s) - N/A
Material Delivered - Sand

- Fill sandbags
- PCB screen sample of upper staging area soil

Summary of Work:

- on site
- Safety Mtg.
- meet w/Dave to discuss the days workplan
- OP-Tech is maintaining the slurry wall.
- OP-Tech works on temp. drainage + upper access rd construction.
- Sand is being delivered, OP-Tech fill sandbags.
- Elena Goodhall is onsite. Dave, Elena, + myself walk the site.
- Joe Warburton is onsite. Joe + I test the upper staging area soil w/a PCB screening kit. Results are less than 50 ppm of PCB in the soil.
- Elena is offsite.
- Joe is offsite.
- OP-Tech is getting Item C stone hauled to the site, starting tomorrow.
- OP-Tech is offsite.
- I leave the site.

Attachments:

- ☐ Contractor Report
- ☐ Field Notes
- ☐ Other:

Bill Foster — 10/06/11

Signature of CQA Monitor — **Date**

Brown AND Caldwell

Daily Field Report

Site:	Ford Rd.	**Date:**	10/07/11 (Friday)
Project:	Phase 1 Remedial Action Work	**Time In:**	0700
Project No:	141617	**Time Out:**	1700
BC Personnel:	Bill Foster	**Weather:**	75° Sunny

Items Worked On:

- ☐ Mobilization/Demobilization
- ☑ Temporary Erosion and Sedimentation Controls
- ☐ Site Preparation
- ☑ Sedimentation Basin Construction
- ☑ Access Road Construction
- ☐ WWTP
- ☑ Cement-Bentonite Slurry Wall ~~Construction~~ Maintenance
- ☐ North Soil Removal Area
- ☐ South Soil Removal Area
- ☐ River Bank Construction
- ☐ Restoration
- ☑ Other - Material delivery - Stone • clearing

Contractor/Subcontractors/Visitors/Alterations:

Contractor(s) - OP-Tech
Subcontractor(s) - N/A
Visitor(s) - N/A
Phone Call(s) - Elena Godhall, Rick Isaac
Alteration(s) - N/A
Material Delivered - Item C stone

Summary of Work:

- on site
- safety mtg.
- meet w/Dave to discuss the days workplan.
- OP-Tech continues to maintain the slurry wall.
- OP-Tech is having stone delivered. OP-Tech places that stone over woven geotextile on the upper access rd. This will hopefully provide a stable base to build the access rd on.
- OP-Tech is clearing trees to provide more space to place soil removed from the north Soil Removal area, that doesn't need to go to the upper surface staging area.
- OP-Tech is working on temp. drainage & building the floor @ the north end of the sed basin up to grade.
- OP-Tech is offsite.
- I leave the site.

Attachments:

- ☐ Contractor Report
- ☐ Field Notes
- ☐ Other:

Bill Foster 10/07/11

Signature of CQA Monitor **Date**

Brown AND Caldwell

Daily Field Report

Site:	Ford Rd.	**Date:**	10/08/11 (Saturday)
Project:	Phase 1 Remedial Action Work	**Time In:**	0700
Project No:	141617	**Time Out:**	1700
BC Personnel:	Bill Foster	**Weather:**	80° Sunny

Items Worked On:

- ☐ Mobilization/Demobilization
- ☑ Temporary Erosion and Sedimentation Controls
- ☐ Site Preparation
- ☐ Sedimentation Basin Construction
- ☑ Access Road Construction
- ☐ WWTP
- ☑ Cement-Bentonite Slurry Wall ~~Construction~~ Maintenance
- ☐ North Soil Removal Area
- ☐ South Soil Removal Area
- ☐ River Bank Construction
- ☐ Restoration
- ☐ Other - Clearing

Contractor/Subcontractors/Visitors/Alterations:

Contractor(s) - OP-Tech
Subcontractor(s) - N/A
Visitor(s) - N/A
Phone Call(s) - Elena Goodhall, Rick Isaac
Alteration(s) - N/A
Material Delivered - N/A

Summary of Work:

- on site
- Safety mtg.
- meet w/Dave to discuss the days workplan.
- OP-Tech is maintaining the slurry wall.
- OP-Tech continues to work on drainage & fill the floor of the sed. basin up to grade.
- OP-Tech continues to clear trees from the toe of slope, to provide extra space for the soil that is removed from the North Area, that is under 50 on the PID, & can be placed @ the toe of slope.
- OP-Tech continues to work on drainage.
- OP-Tech continues placing stone on the upper access rd. The stone is placed on top of woven geotextile.
- OP-Tech is offsite.
- I leave the site.

Attachments:

- ☐ Contractor Report
- ☐ Field Notes
- ☐ Other:

BW WT 10/08/11

Signature of CQA Monitor **Date**

Brown AND Caldwell

Daily Field Report

Site:	Ford Rd.	**Date:**	10/10/11 (Monday)
Project:	Phase 1 Remedial Action Work	**Time In:**	0700
Project No:	141617	**Time Out:**	1700
BC Personnel:	Bill Foster	**Weather:**	75° Sunny

Items Worked On:

- ☐ Mobilization/Demobilization
- ☑ Temporary Erosion and Sedimentation Controls
- ☐ Site Preparation
- ☑ Sedimentation Basin Construction
- ☑ Access Road Construction
- ☐ WWTP
- ☑ Cement-Bentonite Slurry Wall ~~Construction~~ maintenance
- ☐ North Soil Removal Area
- ☐ South Soil Removal Area
- ☐ River Bank Construction
- ☐ Restoration
- ☑ Other - Material Delivery - stone
  - clearing
  - Silt Fence Repair

Contractor/Subcontractors/Visitors/Alterations:

Contractor(s) - OP-Tech
Subcontractor(s) - N/A
Visitor(s) - N/A
Phone Call(s) - Elena Goodwell, Rick Isaac
Alteration(s) - N/A
Material Delivered - Stone

Summary of Work:

- on site
- safety mtg.
- meet w/Dave to discuss the days workplan.
- OP-Tech continues maintaining the slurry wall.
- OP-Tech continues clearing @ the toe of slope & @ the North Soil Removal Area.
- OP-Tech is grading the lower river rd. Stone has been placed over top of woven geotextile for the entire length of the upper access rd.
- OP-Tech finishes clearing the remaining trees @ the north soil removal area.
- OP-Tech has woven geotextile w/stone on top of it all the way to the north soil removal area.
- OP-Tech repairs some silt fence.
- OP-Tech is offsite
- I leave the site.

Attachments:

- ☐ Contractor Report
- ☐ Field Notes
- ☐ Other:

Bill Foster — 10/10/11

Signature of CQA Monitor — **Date**

Brown AND Caldwell

Daily Field Report

Site:	Ford Rd.	**Date:**	10/11/11 (Tuesday)
Project:	Phase 1 Remedial Action Work	**Time In:**	0700
Project No:	141617	**Time Out:**	1900
BC Personnel:	Bill Foster	**Weather:**	75° P. Sunny

Items Worked On:

- ☐ Mobilization/Demobilization
- ☑ Temporary Erosion and Sedimentation Controls
- ☐ Site Preparation
- ☑ Sedimentation Basin Construction
- ☑ Access Road Construction
- ☐ WWTP
- ☐ Cement-Bentonite Slurry Wall Construction
- ☑ North Soil Removal Area - Super Sacks Haul
- ☐ South Soil Removal Area
- ☐ River Bank Construction
- ☐ Restoration
- ☑ Other - Progress Mtg. - Material delivery - Sand

Contractor/Subcontractors/Visitors/Alterations:

Contractor(s) - OP-Tech

Subcontractor(s) - N/A

Visitor(s) - Elena Gwdhall, Joe Montello, Clarissa Gereby

Phone Call(s) - Elena Gwdhall, Rick Isaac

Alteration(s) - N/A

Material Delivered - Sand

Summary of Work:

- On site
- Safety Mtg.
- Meet w/Dave to discuss the days workplan.
- OP-Tech is loading super sacks into the end dump + hauling them to the north soil removal area. 8 super sacks/load.
- OP-Tech begins placing the supersacks in the river.
- OP-Tech maintains the silt fence
- OP-Tech maintains the access Rd.
- Weekly progress mtg. Joe Montello, Elena Gwdhall + Clarissa Gereby are onsite for the mtg. We walk the site.
- Joe, Clarissa, + Elena are offsite.
- OP-Tech finishes for the day + is offsite.
- I leave the site.

-OP-Tech places plastic over the upper staging area stockpile.

Attachments:

- ☐ Contractor Report
- ☐ Field Notes
- ☐ Other:

Bill Foster — **Signature of CQA Monitor**

10/11/11 — **Date**

Brown AND Caldwell

Daily Field Report

Site:	Ford Rd.	**Date:**	10/12/11 (Wed)
Project:	Phase 1 Remedial Action Work	**Time In:**	0700
Project No:	141617	**Time Out:**	1300
BC Personnel:	Bill Foster	**Weather:**	65° Rain

Items Worked On:

- ☐ Mobilization/Demobilization
- ☐ Temporary Erosion and Sedimentation Controls
- ☐ Site Preparation
- ☐ Sedimentation Basin Construction
- ☑ Access Road ~~Construction~~ Maintenance
- ☐ WWTP
- ☐ Cement-Bentonite Slurry Wall Construction
- ☑ North Soil Removal Area - Haul Super Socks
- ☐ South Soil Removal Area
- ☐ River Bank Construction
- ☐ Restoration
- ☑ Other - Fill Super Socks - Clean mud off equipment

Contractor/Subcontractors/Visitors/Alterations:

Contractor(s) - OP-Tech
Subcontractor(s) - N/A
Visitor(s) - Bill Frederick
Phone Call(s) - Elena Lundholl, Rich Isaac
Alteration(s) - N/A
Material Delivered - N/A

Summary of Work:

- on site
- Safety mtg.
- meet w/Dave to discuss the days workplan.
- OP-Tech is maintaining the upper access rd.
- OP-Tech begins hauling super socks to the north soil removal area w/the end dump. 8 super socks/load.
- It begins to rain hard.
- OP-Tech stops working on the rd & stops hauling super socks. The rd. is getting to rutted up.
- OP-Tech works the rest of the day by filling super socks & cleaning the mud off their equipment.
- Bill Frederick is onsite. He walks the site & is offsite.
- OP-Tech is offsite.
- I left the site @ 1300 today.

Attachments:

- ☐ Contractor Report
- ☐ Field Notes
- ☐ Other:

BF 10/12/11

Signature of CQA Monitor **Date**

Brown AND Caldwell

Daily Field Report

Site:	Ford Rd.	Date:	10/17/11 (Monday)
Project:	Phase 1 Remedial Action Work	Time In:	0700
Project No:	141617	Time Out:	1700
BC Personnel:	Bill Foster	Weather:	60° P. Sunny

Items Worked On:

- ☐ Mobilization/Demobilization
- ☑ Temporary Erosion and Sedimentation Controls
- ☐ Site Preparation
- ☐ Sedimentation Basin Construction
- ☑ Access Road ~~Construction~~ maintenance
- ☐ WWTP
- ☑ Cement-Bentonite Slurry Wall ~~Construction~~ maintenance
- ☑ North Soil Removal Area - Install super sacks
- ☐ South Soil Removal Area
- ☐ River Bank Construction
- ☐ Restoration
- ☑ Other - Material Delivery - Low Perm Soil

Contractor/Subcontractors/Visitors/Alterations:

Contractor(s) - OP-Tech
Subcontractor(s) - N/A
Visitor(s) - N/A
Phone Call(s) - Elena Goodhall, Rick Isaac
Alteration(s) - N/A
Material Delivered - Low Perm Soil

Summary of Work:

- on site
- safety mtg.
- Meet w/Dave to discuss the days workplan.
- OP-Tech finishes installing the remaining super sacks.
- OP-Tech has 2 loads of low-perm soil delivered. I check moisture + it is wet of optimum ≈ 6%.
- OP-Tech pumps water off the top of the slurry wall.
- OP-Tech works on Temp. drainage + sedimentation controls.
- OP-Tech also maintains the access rd.
- OP-Tech buttons everything up, as there is a chance for rain tonight + tomorrow.
- OP-Tech is offsite.
- I leave the site.

- OP-Tech also removes another foot of overburden from the North Soil Removal Area.

Attachments:

- ☐ Contractor Report
- ☐ Field Notes
- ☐ Other:

Bill Foster — Signature of CQA Monitor

10/17/11 — Date

Brown AND Caldwell

Daily Field Report

Site:	Ford Rd.	Date:	10/18/11 (Tuesday)
Project:	Phase 1 Remedial Action Work	Time In:	0700
Project No:	141617	Time Out:	1700
BC Personnel:	Bill Foster	Weather:	55° - Cloudy

Items Worked On:

- ☐ Mobilization/Demobilization
- ☑ Temporary Erosion and Sedimentation Controls
- ☐ Site Preparation
- ☐ Sedimentation Basin Construction
- ☑ Access Road ~~Construction~~ Maintenance
- ☐ WWTP
- ☑ Cement-Bentonite Slurry Wall ~~Construction~~ Maintenance
- ☐ North Soil Removal Area
- ☐ South Soil Removal Area
- ☐ River Bank Construction
- ☐ Restoration
- ☑ Other - Material Delivery - Low Perm Soil

Contractor/Subcontractors/Visitors/Alterations:

- Contractor(s) - OP-Tech
- Subcontractor(s) - N/A
- Visitor(s) - Elena Goodhall, Matt Sprong
- Phone Call(s) - Elena Goodhall, Rick Isaac, Jim Peeples
- Alteration(s) - N/A
- Material Delivered - Low Perm Soil

Summary of Work:

- on site
- safety mtg.
- meet w/Dave to discuss the days workplan.
- OP-Tech is maintaining the slurry wall, pumping water from the top of it.
- OP-Tech also maintains the access rd.
- Low Perm soil is being delivered. I check moisture + get 16.4%. This is w/in our window of acceptable moisture.
- Elena Goodhall is onsite. We walk the site.
- weekly progress mtg. Matt Sprong, Elena, Dave, + myself attend.
- OP-Tech backfills the slurry wall w/Low Perm soil.
- OP-Tech covers the low perm soil stockpile.
- ~~OP-Tech is~~ Elena + Matt are offsite.
- OP-Tech is offsite.
- I leave the site.

Attachments:

- ☐ Contractor Report
- ☐ Field Notes
- ☐ Other:

Bill Foster — Signature of CQA Monitor

10/18/11 — Date

Brown AND Caldwell

Daily Field Report

Site:	Ford Rd.	Date:	10/20/11 (Thursday)
Project:	Phase 1 Remedial Action Work	Time In:	0700
Project No:	141617	Time Out:	1700
BC Personnel:	Bill Foster	Weather:	50° Rain

Items Worked On:

- ☐ Mobilization/Demobilization
- ☐ Temporary Erosion and Sedimentation Controls
- ☐ Site Preparation
- ☐ Sedimentation Basin Construction
- ☐ Access Road Construction
- ☐ WWTP
- ☐ Cement-Bentonite Slurry Wall Construction
- ☐ North Soil Removal Area
- ☐ South Soil Removal Area
- ☐ River Bank Construction
- ☐ Restoration
- ☑ Other - ~~Take soil sample of steep slope & low perm soil to~~ sample steep slope + low perm soil

Contractor/Subcontractors/Visitors/Alterations:

Contractor(s) - OP-Tech
Subcontractor(s) - N/A
Visitor(s) - Pat Steerman, Dan George, Demaree Collier, Vanessa Steigerwald-Dick
Phone Call(s) - Elena Goodhall, Jim Peeples, Rick Isaac
Alteration(s) - N/A
Material Delivered - N/A

Summary of Work:

- on site
- safety mtg.
- Meet w/Dave to discuss the days workplan.
- Dave & I walk the site. The river has come up over its banks & the North Soil Removal Area is completely under water.
- Pat Steerman is onsite. Pat, Dave, & I walk the site.
- Dan George is onsite.
- I take a sample of steep slope fill & a sample of low perm soil. I will take them to S+ME, formerly BBC+M, tomorrow to have standard proctors run.
- Demaree Collier & Vanessa Steigerwald are onsite.
- Demaree, Vanessa, Dan, Pat, Dave, & myself walk the site.
- Demaree, Vanessa, Dan, & Pat are off site.
- Dave & I leave the site.

Attachments:

- ☐ Contractor Report
- ☐ Field Notes
- ☐ Other:

[signature] 10/20/11

Signature of CQA Monitor — Date

Brown AND Caldwell

Daily Field Report

Site:	Ford Rd.	**Date:**	10/24/11 (Monday)
Project:	Phase 1 Remedial Action Work	**Time In:**	0700
Project No:	141617	**Time Out:**	1730
BC Personnel:	Bill Foster	**Weather:**	60° Rain turning to P. Sunny

Items Worked On:

- ☐ Mobilization/Demobilization
- ☒ Temporary Erosion and Sedimentation Controls - Weekly Inspection
- ☐ Site Preparation
- ☐ Sedimentation Basin Construction
- ☐ Access Road Construction
- ☐ WWTP
- ☐ Cement-Bentonite Slurry Wall Construction
- ☐ North Soil Removal Area
- ☐ South Soil Removal Area
- ☐ River Bank Construction
- ☐ Restoration
- ☒ Other - Material delivery - low perm soil

Contractor/Subcontractors/Visitors/Alterations:

Contractor(s) - OP-Tech
Subcontractor(s) - N/A
Visitor(s) - N/A
Phone Call(s) - Elena Goodhall, Rick Isaac
Alteration(s) - N/A
Material Delivered - Low Perm Soil

Summary of Work:

- on site
- safety mtg.
- meet w/Dave to discuss the days workplan.
- OP-Tech isn't doing anything today except having low perm soil delivered.
- I do my weekly soil erosion + sedimentation control inspection. A few sections of silt fence need repaired + the temp. drainage swale need cleaned out, ~~[illegible]~~ and straw bale barriers need put back into the swales + anchored down.
- OP-Tech maintains Ford Rd today. Sweeping/watering the road as needed to keep it clean from the trucks tracking mud onto it.
- OP-Tech is offsite.
- I leave the site.

Attachments:

- ☐ Contractor Report
- ☐ Field Notes
- ☐ Other:

Bill Foster — **Signature of CQA Monitor**

10/24/11 — **Date**

Brown AND Caldwell

Daily Field Report

Site:	Ford Rd.	**Date:**	10/25/11 (Tuesday)
Project:	Phase 1 Remedial Action Work	**Time In:**	0700
Project No:	141617	**Time Out:**	1730
BC Personnel:	Bill Foster	**Weather:**	65° Sunny

Items Worked On:

- ☐ Mobilization/Demobilization
- ☑ Temporary Erosion and Sedimentation Controls
- ☐ Site Preparation
- ☐ Sedimentation Basin Construction
- ☐ Access Road Construction
- ☐ WWTP
- ☐ Cement-Bentonite Slurry Wall Construction
- ☐ North Soil Removal Area
- ☐ South Soil Removal Area
- ☐ River Bank Construction
- ☐ Restoration
- ☑ Other - material Delivery - Low Perm - weekly Progress mtg.

Contractor/Subcontractors/Visitors/Alterations:

Contractor(s) - OP-Tech

Subcontractor(s) - N/A

Visitor(s) - Rick Isaac

Phone Call(s) - Rick Isaac, Elena Goodhall

Alteration(s) - N/A

Material Delivered - Low Perm Soil

Summary of Work:

- on site
- Safety mtg.
- Meet w/Dave to discuss the days workplan.
- OP-Tech is having Low Perm Soil delivered.
- OP-Tech fixes silt fence + maintains the drainage swales + Straw bale barriers.
- OP-Tech maintains Ford Rd.
- Rick Isaac is onsite. We walk the site.
- We have our weekly progress mtg. Rick, Dave, + I attend, Other call in
- Rick is offsite.
- OP-Tech finishes for the day by covering the low perm stockpile w/plastic, to protect it from rain.
- OP-Tech is offsite.
- I leave the site

Attachments:

- ☐ Contractor Report
- ☐ Field Notes
- ☐ Other:

Bill Foster — 10/25/11

Signature of CQA Monitor — **Date**

Brown AND Caldwell

Daily Field Report

Site:	Ford Rd.	Date:	10/26/11 (Wed)
Project:	Phase 1 Remedial Action Work	Time In:	0700
Project No:	141617	Time Out:	1700
BC Personnel:	Bill Foster	Weather:	60° Overcast

Items Worked On:

- ☐ Mobilization/Demobilization
- ☑ Temporary Erosion and Sedimentation Controls Maintenance
- ☐ Site Preparation
- ☐ Sedimentation Basin Construction
- ☑ Access Road Construction
- ☐ WWTP
- ☐ Cement-Bentonite Slurry Wall Construction
- ☐ North Soil Removal Area
- ☐ South Soil Removal Area
- ☐ River Bank Construction
- ☐ Restoration
- ☑ Other - Dewatering Pad Maintenance - Material Delivery - Low Perm Soil.

Contractor/Subcontractors/Visitors/Alterations:

Contractor(s) - OP-Tech

Subcontractor(s) - N/A

Visitor(s) -

Phone Call(s) - Elena Goodhall, Rick Isaac

Alteration(s) - N/A

Material Delivered - Low Perm Soil

Summary of Work:

- On site
- Safety Mtg.
- Meet w/Dave to discuss the days workplan.
- OP-Tech is having low perm soil delivered.
- OP-Tech is prepping for excavation of the North Soil Removal Area beginning tomorrow morning.
- OP-Tech does maintenance on the dewatering pad.
- OP-Tech maintains the access rd.
- OP-Tech maintains the temp. erosion + sed. controls
- OP-Tech finishes for the day + is offsite.
- I leave the site.

Attachments:

- ☐ Contractor Report
- ☐ Field Notes
- ☐ Other:

Bill Foster — Signature of CQA Monitor

10/26/11 — Date

Brown AND Caldwell

Daily Field Report

Site:	Ford Rd.	**Date:**	10/27/11 (Thursday)
Project:	Phase 1 Remedial Action Work	**Time In:**	0700
Project No:	141617	**Time Out:**	1700
BC Personnel:	Bill Foster	**Weather:**	50° Rain

Items Worked On:

- ☐ Mobilization/Demobilization
- ☐ Temporary Erosion and Sedimentation Controls
- ☐ Site Preparation
- ☐ Sedimentation Basin Construction
- ☑ Access Road Construction Maintenance
- ☐ WWTP
- ☐ Cement-Bentonite Slurry Wall Construction
- ☑ North Soil Removal Area – Maybe
- ☐ South Soil Removal Area
- ☐ River Bank Construction
- ☐ Restoration
- ☑ Other - Material Delivery - # 411 stone

Contractor/Subcontractors/Visitors/Alterations:

- Finish w/ Dewatering Pad maintenance

Contractor(s) - OP-Tech
Subcontractor(s) - N/A
Visitor(s) - ~~Bill Foster~~
Phone Call(s) - Jim Peeples, Rick Isaac, Elena Goodhall
Alteration(s) - N/A
Material Delivered - # 411 Stone

Summary of Work:

- on site
- Safety mtg.
- Meet w/ Dave to discuss the days workplan.
- OP-Tech is finishing up w/ the dewatering pad maintenance
- Begins to rain harder, ~~River level~~ water level of the river is rising. May not be able to begin excavation if it continues to rise.
- OP-Tech maintains the access rd. Preparing it to handle all day rain.
- Excavation is cancelled. Too much rain.
- OP-Tech re-installs liner + sump in the dewatering pad.
- ~~[illegible]~~ OP-Tech has # 411 stone delivered.
- OP-Tech will try to begin excavation tomorrow morning.
- OP-Tech is offsite.
- I leave the site.

Attachments:

- ☐ Contractor Report
- ☐ Field Notes
- ☐ Other:

Bill Foster — 10/27/11

Signature of CQA Monitor — **Date**

Brown AND Caldwell

Daily Field Report

Site:	Ford Rd.	**Date:**	10/28/11 (Friday)
Project:	Phase 1 Remedial Action Work	**Time In:**	0700
Project No:	141617	**Time Out:**	1700
BC Personnel:	Bill Foster	**Weather:**	50° - P. Sunny

Items Worked On:

- ☐ Mobilization/Demobilization
- ☑ Temporary Erosion and Sedimentation Controls
- ☐ Site Preparation
- ☐ Sedimentation Basin Construction
- ☑ Access Road Construction Maintenance
- ☐ WWTP
- ☐ Cement-Bentonite Slurry Wall Construction
- ☑ North Soil Removal Area
- ☐ South Soil Removal Area
- ☐ River Bank Construction
- ☐ Restoration
- ☑ Other - material Delivery - #411 Stone - 4"x8" Brick

Contractor/Subcontractors/Visitors/Alterations:

Contractor(s) - OP-Tech
Subcontractor(s) - N/A
Visitor(s) - Bill Frederick
Phone Call(s) - Elena Goodhall, Rick Isaac, Jim Peeples
Alteration(s) - N/A
Material Delivered - #411 Stone & 4"x8" Bricks

Summary of Work:

- on site
- Safety mtg.
- meet w/Dave to discuss the days workplan.
- Bill Frederick is onsite.
- The river level is still too high to begin excavation this morning.
- OP-Tech is having #411 stone delivered & 4"x8" Brick delivered.
- OP-Tech works on Temp Erosion + Sed. controls.
- OP-Tech maintains the access rd.
- OP-Tech still can not begin excavation, due to the river being so high. Hopefully excavation can begin tomorrow.
- OP-Tech is offsite. Bill Frederick is offsite.
- I leave the site.

Attachments:

- ☐ Contractor Report
- ☐ Field Notes
- ☐ Other:

Bill Foster — 10/28/11

Signature of CQA Monitor — **Date**

Brown AND Caldwell

Daily Field Report

Site:	Ford Rd.	**Date:**	10/29/11 (Saturday)
Project:	Phase 1 Remedial Action Work	**Time In:**	0700
Project No:	141617	**Time Out:**	1730
BC Personnel:	Bill Foster	**Weather:**	55° Sunny

Items Worked On:

- ☐ Mobilization/Demobilization
- ☐ Temporary Erosion and Sedimentation Controls
- ☐ Site Preparation
- ☐ Sedimentation Basin Construction
- ☑ Access Road ~~Construction~~ maintenance
- ☐ WWTP
- ☐ Cement-Bentonite Slurry Wall Construction
- ☑ North Soil Removal Area
- ☐ South Soil Removal Area
- ☐ River Bank Construction
- ☐ Restoration
- ☐ Other -

Contractor/Subcontractors/Visitors/Alterations:

Contractor(s) - OP-Tech

Subcontractor(s) - N/A

Visitor(s) - Bill Frederick, Clarissa Gereby, Jim Irvin, OEPA (DERR) representative.

Phone Call(s) - Elena Goodhall, Rick Isaac

Alteration(s) - N/A

Material Delivered - N/A

Summary of Work:

- on site
- Safety mtg.
- meet w/Dave to discuss the days workplan.
- Bill Frederick is onsite.
- Prior to OP-Tech beginning excavation of the North Soil Area, I sample 4 test pits. They are A, B, C, + D. I screen the samples. A, B, + D are ≤ 50 ppm PCB's C is > 50 ppm PCB. Test Pit C was sampled @ a depth of 3 feet.
- Bill Frederick agrees that the upper 3 feet of soil can be removed + placed @ the toe of slope.
- Clarissa Gereby + Jim Irvin are onsite. They stay for approx. 2 hours, then leave.
- Two more test pits, E + F, are sampled + are ≤ 50 ppm PCB's
- Bill Frederick + OP-Tech are offsite.
- I leave the site.

Attachments:

- ☐ Contractor Report
- ☐ Field Notes
- ☐ Other:

Signature of CQA Monitor: [signature] Date: 10/29/11

Brown AND Caldwell

Daily Field Report

Site: Ford Rd.	**Date:** 10/29/11 (Saturday)
Project: Phase 1 Remedial Action Work	**Time In:** 0700
Project No: 141617	**Time Out:** 1730
BC Personnel: Bill Foster	**Weather:** 55° Sunny

	PID	PCB (color)	PCB (ppm)
B-3	0.5	7	<50
C-3	6.3	5	>50
D-4	0.0	4	<50
E-3	13.0	3	<50
F-3	5.2	4	<50

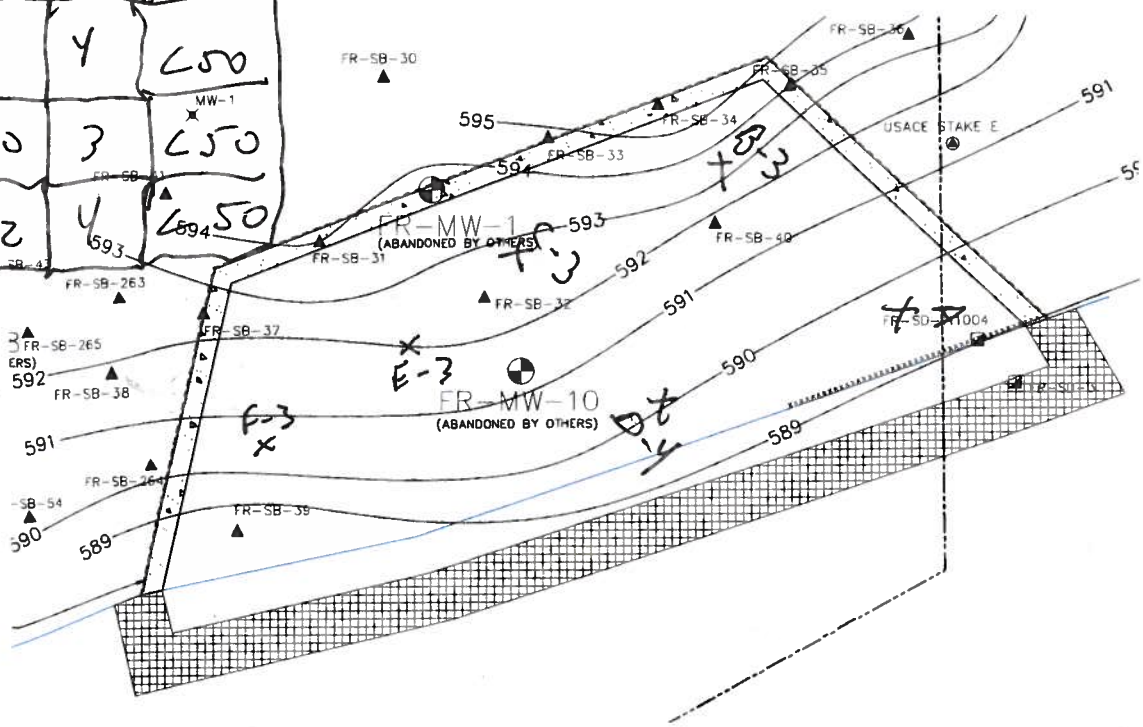

Attachments:

- ☐ Contractor Report
- ☐ Field Notes
- ☐ Other:

Bill Foster — 10/29/11

Signature of CQA Monitor — **Date**

Brown AND Caldwell

Daily Field Report

Site:	Ford Rd.	Date:	10/30/11 (Sunday)
Project:	Phase 1 Remedial Action Work	Time In:	0700
Project No:	141617	Time Out:	1730
BC Personnel:	Bill Foster	Weather:	55° Sunny

Items Worked On:

- ☐ Mobilization/Demobilization
- ☐ Temporary Erosion and Sedimentation Controls
- ☐ Site Preparation
- ☐ Sedimentation Basin Construction
- ☑ Access Road ~~Construction~~ Maintenance
- ☐ WWTP
- ☐ Cement-Bentonite Slurry Wall Construction
- ☑ North Soil Removal Area
- ☐ South Soil Removal Area
- ☐ River Bank Construction
- ☐ Restoration
- ☐ Other -

Contractor/Subcontractors/Visitors/Alterations:

Contractor(s) - OP-Tech
Subcontractor(s) - N/A
Visitor(s) - Bill Frederick, Vanessa Steigerwald-Dick
Phone Call(s) - Elena Goodhall
Alteration(s) - N/A
Material Delivered - N/A

Summary of Work:

- on site
- safety mtg.
- meet w/Dave to discuss the days workplan.
- Bill Frederick is onsite.
- OP-Tech continues w/the excavation of the North Soil area.
- Bill Frederick + I have been able to isolate, by testing + visually, the layer of impacted soil.
- OP-Tech maintains the access rd each time a truck damages it.
- This morning most material is hauled to the toe of the slope.
- After lunch the impacted soil layer is removed + hauled up top.
- Vanessa Steigerwald-Dick is onsite. She stays for ≈ 3 hrs + is offsite.
- Impacted soil pile is covered daily w/plastic.
- Bill Frederick is offsite
- OP-Tech is offsite.
- I leave the site.

Attachments:

- ☐ Contractor Report
- ☐ Field Notes
- ☐ Other:

Bill Foster — Signature of CQA Monitor

10/30/11 — Date

Brown AND Caldwell

Daily Field Report

Site:	Ford Rd.	Date:	10/30/11 (Sunday)
Project:	Phase 1 Remedial Action Work	Time In:	0700
Project No:	146617	Time Out:	1730
BC Personnel:	Bill Foster	Weather:	55° Sunny

	PID	PCB (colorf.)	PCB (ppm)
G-7	0.1	4	≤ 50
H-5	0.3	4.5	≈ 50
H-7	2.9	3	≤ 50

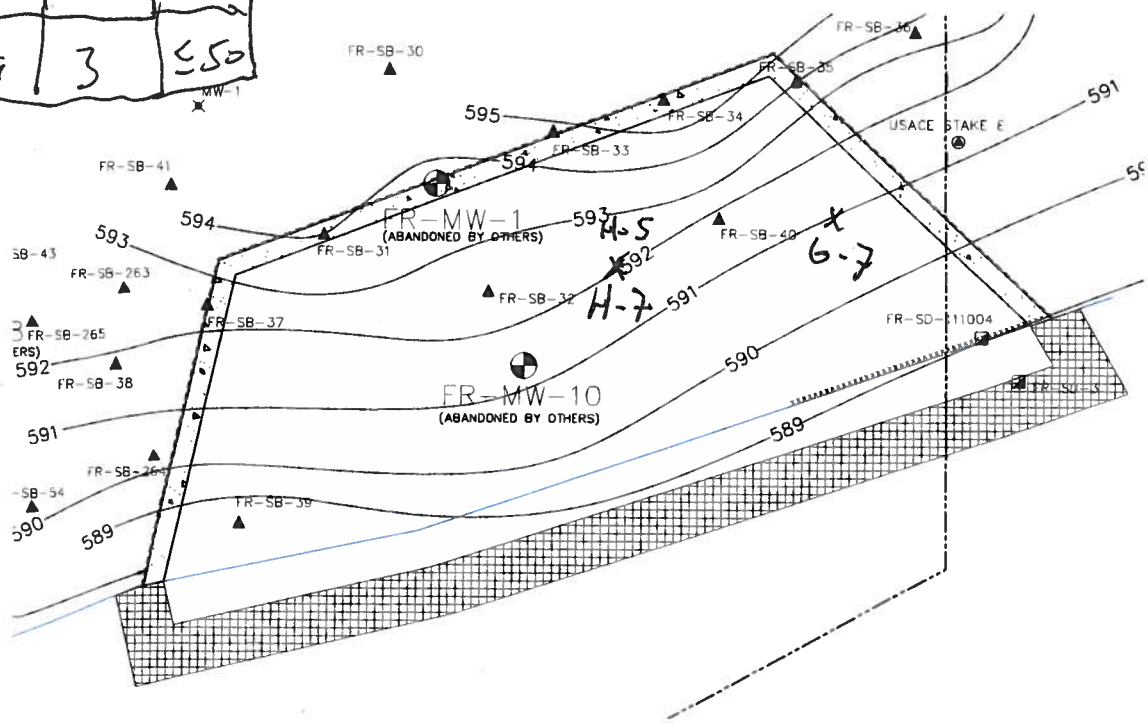

Attachments:

- ☐ Contractor Report
- ☐ Field Notes
- ☐ Other:

Bill Foster — Signature of CQA Monitor

10/30/11 — Date

Brown AND Caldwell

Daily Field Report

Site:	Ford Rd.	**Date:**	10/31/11 (Monday)
Project:	Phase 1 Remedial Action Work	**Time In:**	0700
Project No:	141617	**Time Out:**	1700
BC Personnel:	Bill Foster	**Weather:**	55° Cloudy

Items Worked On:

- ☐ Mobilization/Demobilization
- ☐ Temporary Erosion and Sedimentation Controls
- ☐ Site Preparation
- ☐ Sedimentation Basin Construction
- ☑ Access Road ~~Construction~~ Maintenance
- ☐ WWTP
- ☐ Cement-Bentonite Slurry Wall Construction
- ☑ North Soil Removal Area
- ☐ South Soil Removal Area
- ☐ River Bank Construction
- ☐ Restoration
- ☑ Other - Material Delivery - 4"x8" Brick

Contractor/Subcontractors/Visitors/Alterations:

Contractor(s) - OP-Tech
Subcontractor(s) - N/A
Visitor(s) - Bill Frederick, Clarissa Gereby, Jim Subo, Joe Montello
Phone Call(s) - Elena Goodhull, Rich Evans, Jim Peoples
Alteration(s) - N/A
Material Delivered - 4"x8" Brick

Summary of Work:

- on site
- safety mtg
- meet w/Dave to discuss the days workplan.
- Bill Frederick is onsite.
- OP-Tech continues excavating the North Soil Area.
- The remaining impacted material, excluding the dike, is removed + hauled up top before lunch.
- ~~[illegible]~~ Clarissa Gereby (OEPA) + Jim Subo (Lorain Cty Health Dept.) are onsite. Joe Montello is also onsite. All 3 stay for ~2 hrs + are offsite.
- OP-Tech removes the remaining, clean soil, to bedrock this afternoon.
- The impacted soil stockpile is covered w/plastic @ the end of the day.
- Bill Frederick is offsite.
- OP-Tech is offsite.
- I leave the site.

Attachments:

- ☐ Contractor Report
- ☐ Field Notes
- ☐ Other:

Bill Foster — **Signature of CQA Monitor**

10/31/11 — **Date**

Brown AND Caldwell

Daily Field Report

Site:	Ford Rd.	**Date:**	11/01/11 (Tuesday)
Project:	Phase 1 Remedial Action Work	**Time In:**	0700
Project No:	141617	**Time Out:**	1830
BC Personnel:	Bill Foster	**Weather:**	60° P.Sunny

Items Worked On:

- ☐ Mobilization/Demobilization
- ☐ Temporary Erosion and Sedimentation Controls
- ☐ Site Preparation
- ☐ Sedimentation Basin Construction
- ☑ Access Road ~~Construction~~ Maintenance
- ☐ WWTP
- ☐ Cement-Bentonite Slurry Wall Construction
- ☑ North Soil Removal Area
- ☐ South Soil Removal Area
- ☐ River Bank Construction
- ☐ Restoration
- ☑ Other - Material Delivery - 4"x8" Brick - Weekly Progress Mtg.

Contractor/Subcontractors/Visitors/Alterations:

Contractor(s) - OP-Tech

Subcontractor(s) - N/A

Visitor(s) - Elena Goodhall, Bill Frederick, Matt Spronz, Vanessa Steigerwald, Bryant Kierdowski

Phone Call(s) - Elena Goodhall, Jim Peeples, Rick Isaac

Alteration(s) - N/A

Material Delivered - 4"x8" Brick

Summary of Work:

- on site
- safety mtg
- meet w/Dave to discuss the days workplan.
- Bill Frederick is onsite.
- OP-Tech continues to excavate the North Soil area. They have reached bedrock everywhere except a small section @ the south end of the excavation.
- Elena Goodhall is onsite.
- Bryant Kierdowski is onsite to perform a health + safety audit.
- Matt Spronz + Vanessa Steigerwald are onsite for the mtg.
- We have the weekly progress mtg. Vanessa, Bill, + I walk the site.
- Elena, Bryant, Vanessa, + Matt are offsite.
- OP-Tech locates the bedrock, after excavation is finished.
- Bill Frederick is offsite. OP-Tech is offsite.
- I leave the site.

Attachments:

- ☐ Contractor Report
- ☐ Field Notes
- ☐ Other:

Bill Foster 11/01/11

Signature of CQA Monitor **Date**

Brown AND Caldwell

Daily Field Report

Site:	Ford Rd.	**Date:**	11/02/11 (Wed)
Project:	Phase 1 Remedial Action Work	**Time In:**	0700
Project No:	141617	**Time Out:**	1700
BC Personnel:	Bill Foster	**Weather:**	65° Sunny

Items Worked On:

- ☐ Mobilization/Demobilization
- ☐ Temporary Erosion and Sedimentation Controls
- ☐ Site Preparation
- ☐ Sedimentation Basin Construction
- ☑ Access Road ~~Construction~~ Maintenance
- ☐ WWTP
- ☐ Cement-Bentonite Slurry Wall Construction
- ☑ North Soil Removal Area
- ☐ South Soil Removal Area
- ☐ River Bank Construction
- ☐ Restoration
- ☑ Other - Material Delivery - 4"x8" Brick

Contractor/Subcontractors/Visitors/Alterations:

Contractor(s) - OP-Tech
Subcontractor(s) - N/A
Visitor(s) - Clarissa Cerezby, John Sabo
Phone Call(s) - Rick Isaac, Elena Goodhall
Alteration(s) - N/A
Material Delivered - 4"x8" Brick

Summary of Work:

- on site
- safety mtg.
- meet w/Dave to discuss the days work plan.
- OP-Tech is maintaining the access rd. They have 4"x8" Brick delivered to fill in ruts in the access rd.
- OP-Tech begins hauling low perm soil to backfill the North soil area.
- OP-Tech begins ~~building~~ backfilling by building a ramp into the excavation area, in order to provide access for the smooth drum.
- Clarissa Cerezby & John Sabo are onsite. We walk the site.
- OP-Tech continues building the ramp.
- Clarissa & John are offsite.
- OP-Tech finishes w/the ramp & pushes the first lift of low perm.
- ~~[illegible]~~ The lift is too thick. I make them peal it back to 12" thick. I will test it tomorrow.
- OP-Tech is offsite. I leave the site.

Attachments:

- ☐ Contractor Report
- ☐ Field Notes
- ☐ Other:

BN [illegible] 11/02/11

Signature of CQA Monitor **Date**

Brown AND Caldwell

Daily Field Report

Site:	Ford Rd.	**Date:**	11/03/11 (Thursday)
Project:	Phase 1 Remedial Action Work	**Time In:**	0700
Project No:	141617	**Time Out:**	1800
BC Personnel:	Bill Foster	**Weather:**	55° Cloudy

Items Worked On:

- ☐ Mobilization/Demobilization
- ☐ Temporary Erosion and Sedimentation Controls
- ☐ Site Preparation
- ☐ Sedimentation Basin Construction
- ☑ Access Road ~~Construction~~ Maintenance
- ☐ WWTP
- ☐ Cement-Bentonite Slurry Wall Construction
- ☑ North Soil Removal Area - Backfill Lifts 1-5
- ☐ South Soil Removal Area
- ☐ River Bank Construction
- ☐ Restoration
- ☑ Other - Material Delivery - #57

Contractor/Subcontractors/Visitors/Alterations:

Equipment Delivery - sheepsfoot (CP-56[redacted])

Contractor(s) - OP-Tech

Subcontractor(s) - Straub Surveying

Visitor(s) - Clarissa Gorcby

Phone Call(s) - Elena Goodwin, Rick Isaac

Alteration(s) - N/A

Material Delivered - #57 Stone

Summary of Work:

- on site
- safety Mtg
- meet w/Dave to discuss the days workplan.
- Straub Surveying is onsite to locate the slurry wall + stake out the south soil removal area.
- OP-Tech is maintaining the access rd.
- Straub Surveying is offsite.
- OP-Tech continues backfilling the North Soil Area w/ low perm soil.
- OP-Tech hauls it w/an end dump, places it w/an excavator + compacts it w/a CP56 vibratory sheepsfoot. It is placed in 12" lifts. (see Field Compaction Test Data Sheet for Results of compaction testing)
- Clarissa Gorcby is onsite. She stays for ≈ an hour + is offsite.
- OP-Tech places 5 lifts today.
- OP-Tech is offsite.
- I leave the site.

Attachments:

- ☐ Contractor Report
- ☐ Field Notes
- ☐ Other:

BN [illegible] 11/03/11

Signature of CQA Monitor **Date**

Brown AND Caldwell

Daily Field Report

Site:	Ford Rd.	**Date:**	11/07/11 (Thursday)
Project:	Phase 1 Remedial Action Work	**Time In:**	0700
Project No:	141617	**Time Out:**	1800
BC Personnel:	Bill Foster	**Weather:**	55° Cloudy

Low Perm Soil Compaction Test Locations

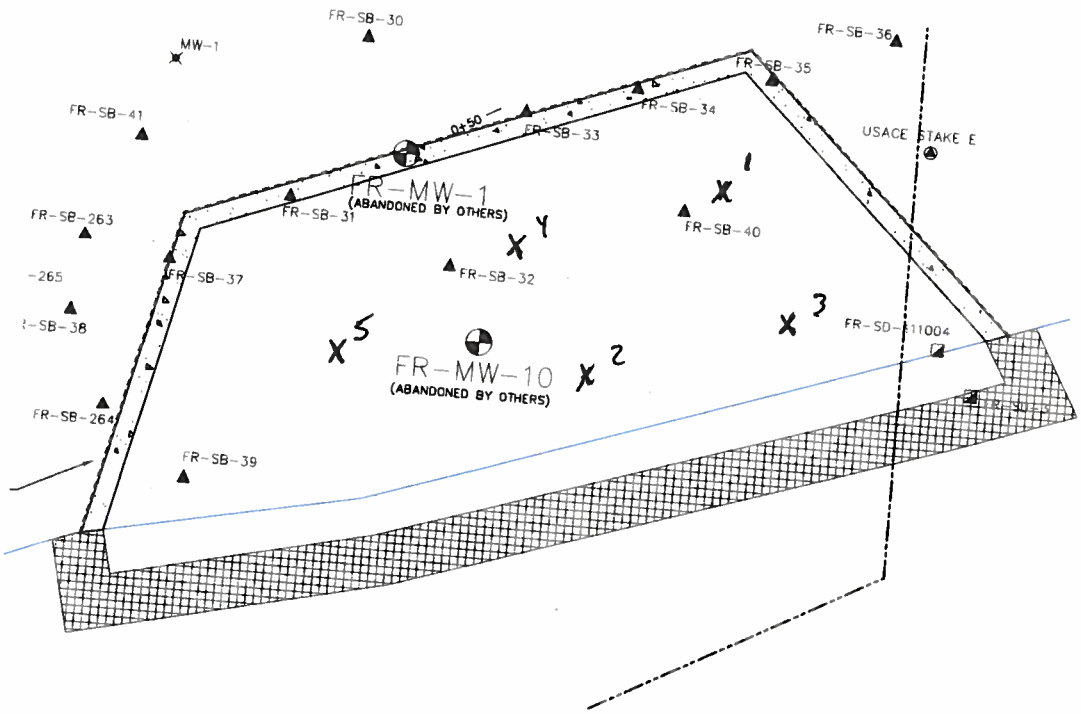

Attachments:

- ☐ Contractor Report
- ☐ Field Notes
- ☐ Other:

Bill Foster — **Signature of CQA Monitor**

11/03/11 — **Date**

Brown AND Caldwell

Daily Field Report

Site:	Ford Rd.	**Date:**	11/04/11 (Friday)
Project:	Phase 1 Remedial Action Work	**Time In:**	0700
Project No:	141617	**Time Out:**	1700
BC Personnel:	Bill Foster	**Weather:**	55° sunny

Items Worked On:

- ☐ Mobilization/Demobilization
- ☐ Temporary Erosion and Sedimentation Controls
- ☐ Site Preparation
- ☐ Sedimentation Basin Construction
- ☑ Access Road ~~Construction~~ maintenance
- ☐ WWTP
- ☐ Cement-Bentonite Slurry Wall Construction
- ☑ North Soil Removal Area - Backfill lifts 6-9
- ☐ South Soil Removal Area - remove dike.
- ☐ River Bank Construction
- ☐ Restoration
- ☑ Other - Material Delivery - low Perm Soil - Concrete

Contractor/Subcontractors/Visitors/Alterations:

Contractor(s) - OP-Tech

Subcontractor(s) - N/A

Visitor(s) - N/A

Phone Call(s) - Elena Lindholl, Jim Peeples, Rich Isaac

Alteration(s) - N/A

Material Delivered - Low Perm Soil, Concrete Rip Rap.

Summary of Work:

- on site
- Safety mtg.
- Meet w/Dave to discuss the days workplan.
- OP-Tech maintains the access rd.
- OP-Tech is having low perm soil delivered. OP-Tech also has concrete rip rap delivered.
- OP-Tech continues to backfill the North Soil Area w/low perm soil.
- OP-Tech uses the same routine as yesterday.
- OP-Tech removes the soil dike that had previously been left in place during excavation.
- OP-Tech places lifts 6-9 today. More low perm soil is needed before anymore backfilling can happen.
- OP-Tech is offsite.
- I leave the site.

Attachments:

- ☐ Contractor Report
- ☐ Field Notes
- ☐ Other:

Bill Foster — 11/04/11

Signature of CQA Monitor — **Date**

Brown AND Caldwell

Daily Field Report

Site:	Ford Rd.	Date:	11/04/11 (Friday)
Project:	Phase 1 Remedial Action Work	Time In:	0700
Project No:	141617	Time Out:	1700
BC Personnel:	Bill Foster	Weather:	55° Sunny

Low Perm Soil Composition test Locations

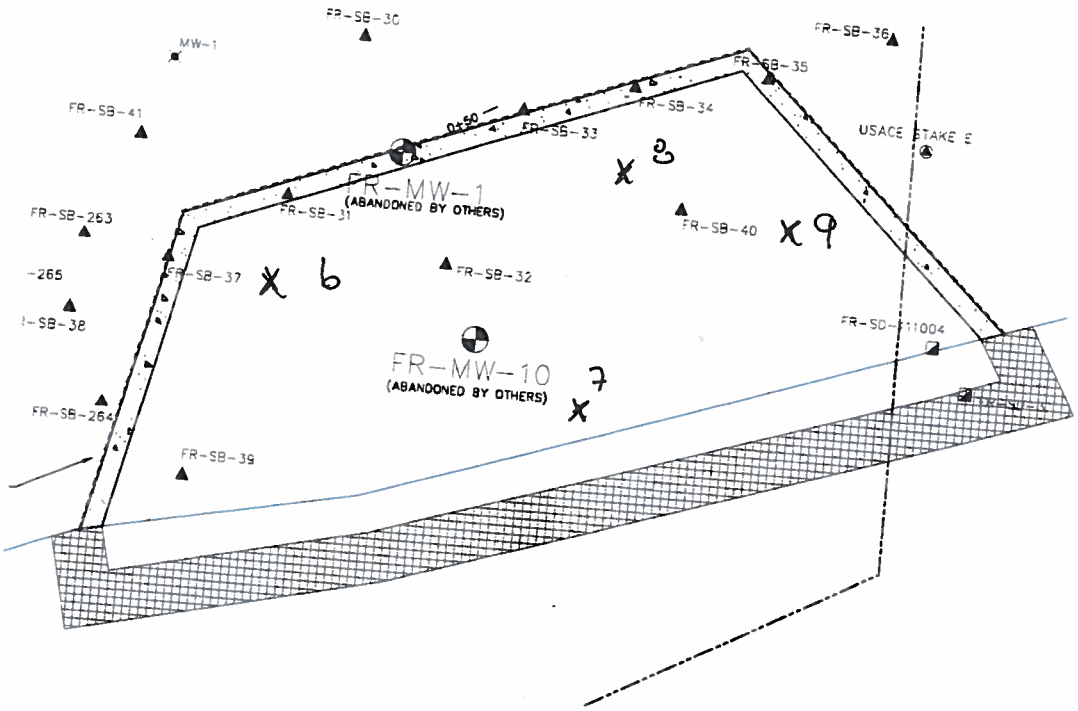

Attachments:

- ☐ Contractor Report
- ☐ Field Notes
- ☐ Other:

Bill Foster — 11/04/11

Signature of CQA Monitor — Date

Brown AND Caldwell

Daily Field Report

Site:	Ford Rd.	Date:	11/07/11 (Monday)
Project:	Phase 1 Remedial Action Work	Time In:	0700
Project No:	141617	Time Out:	1730
BC Personnel:	Bill Foster	Weather:	65° P. Cloudy

Items Worked On:

- ☐ Mobilization/Demobilization
- ☐ Temporary Erosion and Sedimentation Controls
- ☐ Site Preparation
- ☐ Sedimentation Basin Construction
- ☑ Access Road ~~Construction~~ Maintenance
- ☐ WWTP
- ☐ Cement-Bentonite Slurry Wall Construction
- ☑ North Soil Removal Area Backfill Lifts 10-13
- ☐ South Soil Removal Area
- ☐ River Bank Construction
- ☐ Restoration
- ☑ Other - Material Delivery - Rip Rap Low Perm Soil

Contractor/Subcontractors/Visitors/Alterations:

Contractor(s) - OP-Tech

Subcontractor(s) - N/A

Visitor(s) - Elena Goodhall

Phone Call(s) - Elena Goodhall, Rick Isaac, Janine Ostler, Erin McPeek, Jim Peeples

Alteration(s) - N/A

Material Delivered - Rip Rap, Low Perm Soil

Summary of Work:

- Site trailer was broken into last night. Police were notified. Laptop, Scales, Sawsaw, drill, + camera were stolen.

- on site
- safety mtg.
- meet w/Dave to discuss the days workplan
- OP-Tech maintains the access rd.
- OP-Tech continues backfilling the North Soil area w/low perm soil.
- OP-Tech is having low perm soil delivered.
- OP-Tech has rip rap delivered.
- OP-Tech finishes backfilling the North Soil area. Lifts 10-13 are placed today. (See Compaction test data + location sheets for more info.)
- All tests pass. OP-Tech uses the same routine as previously used.
- Elena Goodhall is onsite. She stays for ≈ 1.0 hrs. + leaves.
- OP-Tech finishes for the day + is offsite.
- I leave the site.

Attachments:

- ☐ Contractor Report
- ☐ Field Notes
- ☐ Other:

Bill Foster — Signature of CQA Monitor

11/07/11 — Date

Brown AND Caldwell

Daily Field Report

Site:	Ford Rd.	**Date:**	11/07/11 (Monday)
Project:	Phase 1 Remedial Action Work	**Time In:**	0700
Project No:	141617	**Time Out:**	1730
BC Personnel:	Bill Foster	**Weather:**	65° P. Cloudy

Low Perm Soil Compaction Test Locations

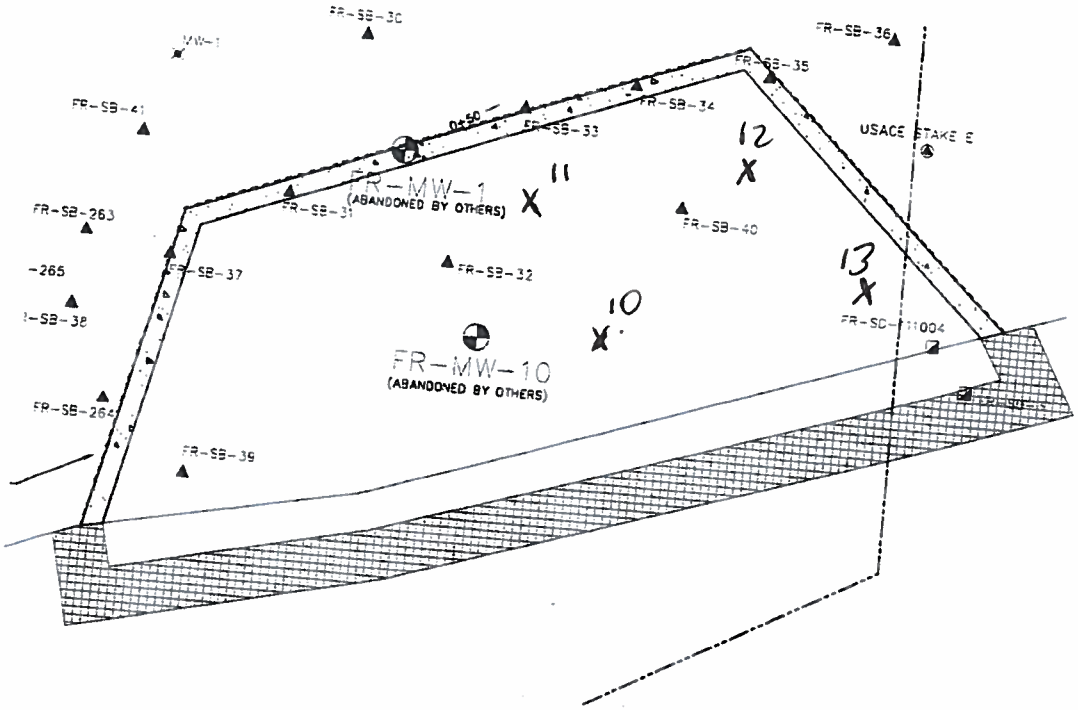

Attachments:

- ☐ Contractor Report
- ☐ Field Notes
- ☐ Other:

Bill Foster — 11/07/11

Signature of CQA Monitor — **Date**

Brown AND Caldwell

Daily Field Report

Site:	Ford Rd.	**Date:**	11/08/11 (Tuesday)
Project:	Phase 1 Remedial Action Work	**Time In:**	0700
Project No:	141617	**Time Out:**	1800
BC Personnel:	Bill Foster	**Weather:**	70° Sunny

Items Worked On:

- ☐ Mobilization/Demobilization
- ☐ Temporary Erosion and Sedimentation Controls
- ☐ Site Preparation
- ☐ Sedimentation Basin Construction
- ☑ Access Road ~~Construction~~ Maintenance
- ☐ WWTP
- ☐ Cement-Bentonite Slurry Wall Construction
- ☐ North Soil Removal Area
- ☐ South Soil Removal Area
- ☑ River Bank Construction & Remove Super Sacks
- ☐ Restoration
- ☑ Other - Material Delivery - #57 - Rip Rap

Contractor/Subcontractors/Visitors/Alterations:

- **Contractor(s) -** OP-Tech
- **Subcontractor(s) -** N/A
- **Visitor(s) -** Rick Isaac, Vanessa Steigerwald
- **Phone Call(s) -** Elena Goodhall, Rick Isaac
- **Alteration(s) -** N/A
- **Material Delivered -** Rip Rap, #57 stone

- Weekly Progress mtg.

Summary of Work:

- on site
- safety mtg.
- meet w/ Dave to discuss the days workplan.
- OP-Tech begins working on the river bank restoration by placing concrete rip rap from bedrock, up to the water level. This rip rap is placed 48.5" thick.
- Vanessa Steigerwald is onsite to observe, and for the progress mtg.
- Rick Isaac is also onsite.
- OP-Tech maintains the access rd.
- OP-Tech has rip rap + #57 stone delivered.
- OP-Tech begins placing the rip rap, above the water level, 48.5" thick.
- Weekly Progress Mtg. Vanessa & Rick are offsite.
- OP-Tech removes the super sack sandbags & takes them up top.
- OP-Tech is offsite.
- I leave the site.

Attachments:

- ☐ Contractor Report
- ☐ Field Notes
- ☐ Other:

Bill Foster 11/08/11

Signature of CQA Monitor **Date**

Brown AND Caldwell

Daily Field Report

Site:	Ford Rd.	**Date:**	11/09/11 (wed)
Project:	Phase 1 Remedial Action Work	**Time In:**	0700
Project No:	141617	**Time Out:**	1800
BC Personnel:	Bill Foster	**Weather:**	60° Rainy

Items Worked On:

- ☐ Mobilization/Demobilization
- ☐ Temporary Erosion and Sedimentation Controls
- ☐ Site Preparation
- ☐ Sedimentation Basin Construction
- ☑ Access Road ~~Construction~~ Maintenance
- ☐ WWTP
- ☐ Cement-Bentonite Slurry Wall Construction
- ☐ North Soil Removal Area
- ☐ South Soil Removal Area
- ☑ River Bank Construction
- ☐ Restoration
- ☑ Other - Sample upper staging area 1 + 2 for PCB's.

Contractor/Subcontractors/Visitors/Alterations:

Contractor(s) - OP-Tech
Subcontractor(s) - N/A
Visitor(s) - Clarissa Gereby, Bill Frederick
Phone Call(s) - Elena Lowdhall, Rich Isaac, Jim Peeples, Joe Morelli
Alteration(s) - N/A
Material Delivered - N/A

Summary of Work:

- on site
- safety mtg.
- meet w/Dave to discuss the days workplan.
- OP-Tech continues w/Riverbank restoration, Placing rip rap, 48.5" thick.
- OP-Tech maintains the access rd.
- Clarissa Gereby is onsite.
- I sample upper staging area 1 + 2. I follow the work plan procedures.
- Clarissa is offsite.
- OP-Tech continues w/the riverbank restoration.
- Bill Frederick is onsite.
- OP-Tech finishes for the day. They have ≈ 2.0 hrs to finish w/the riverbank restoration.
- Bill Frederick is offsite.
- OP-Tech is offsite.
- I leave the site.

Attachments:

- ☐ Contractor Report
- ☐ Field Notes
- ☐ Other:

Bill Foster — 11/09/11

Signature of CQA Monitor — **Date**

Brown AND Caldwell

Daily Field Report

Site:	Ford Rd.	**Date:**	11/10/11 (Thursday)
Project:	Phase 1 Remedial Action Work	**Time In:**	0700
Project No:	146617	**Time Out:**	1800
BC Personnel:	Bill Foster	**Weather:**	45° Sunny

Items Worked On:

- ☐ Mobilization/Demobilization
- ☐ Temporary Erosion and Sedimentation Controls
- ☐ Site Preparation
- ☐ Sedimentation Basin Construction
- ☑ Access Road ~~Construction~~ Maintenance
- ☐ WWTP
- ☐ Cement-Bentonite Slurry Wall Construction
- ☐ North Soil Removal Area
- ☑ South Soil Removal Area
- ☑ River Bank Construction
- ☐ Restoration
- ☐ Other -

Contractor/Subcontractors/Visitors/Alterations:

Contractor(s) - OP-Tech
Subcontractor(s) - N/A
Visitor(s) - Bill Frederick
Phone Call(s) - Elena Goodhall, Rick Isaac
Alteration(s) - N/A
Material Delivered - N/A

Summary of Work:

- on site
- Safety mtg.
- Meet w/Dave to discuss the days workplan.
- Bill Frederick is onsite to provide additional oversight.
- OP-Tech continues restoring the riverbank by installing rip rap, 48.5" thick. OP-Tech finishes mid morning.
- OP-Tech begins excavating the south soil area.
- I check each bucket by testing the soil w/the PID, by a bag test. Any soil above 30ppm is sent up top, any less than 30ppm, is taken to the toe of slope.
- OP-Tech finishes excavation. Approx 120 yards of soil was above 30 ppm.
- OP-Tech backfills the first 3-5 feet w/stone. Excavation is cordoned off.
- OP-Tech & Bill Frederick are offsite.
- I leave the site.

Attachments:

- ☐ Contractor Report
- ☐ Field Notes
- ☐ Other:

BW RT — 11/10/11

Signature of CQA Monitor — **Date**

Brown AND Caldwell

Daily Field Report

Site:	Ford Rd.	**Date:**	11/11/11 (Friday)
Project:	Phase 1 Remedial Action Work	**Time In:**	0700
Project No:	141617	**Time Out:**	1500
BC Personnel:	Bill Foster	**Weather:**	45° Sunny

Items Worked On:

- ☐ Mobilization/Demobilization
- ☐ Temporary Erosion and Sedimentation Controls
- ☐ Site Preparation
- ☐ Sedimentation Basin Construction
- ☑ Access Road ~~Construction~~ Maintenance
- ☐ WWTP
- ☐ Cement-Bentonite Slurry Wall Construction
- ☐ North Soil Removal Area
- ☑ South Soil Removal Area Backfill Lifts 1-10
- ☐ River Bank Construction
- ☐ Restoration
- ☐ Other -

Contractor/Subcontractors/Visitors/Alterations:

Contractor(s) - OP-Tech
Subcontractor(s) - N/A
Visitor(s) - N/A
Phone Call(s) - Elena Goodhell, Rich Isaac, Joe Montello
Alteration(s) - N/A
Material Delivered - N/A

Summary of Work:

- on site
- safety mtg.
- meet w/Dave to discuss the days workplan.
- OP-Tech begins backfilling the South soil area w/low perm soil.
- OP-Tech hauls the material w/an end dump, an excavator places the material in 12" Loose lifts. A vibratory sheepsfoot compacts the material. I test once/lift.
- 10 lifts are placed to bring the area up to ex. grade. All tests pass. (see compaction data + compaction location sheets for more info.)
- OP-Tech maintains the access rd.
- OP-Tech is offsite.
- I leave the site.

Attachments:

- ☐ Contractor Report
- ☐ Field Notes
- ☐ Other:

BW 11/11/11

Signature of CQA Monitor **Date**

Brown AND Caldwell

Daily Field Report

Site:	Ford Rd.	**Date:**	11/11/11 (Friday)
Project:	Phase 1 Remedial Action Work	**Time In:**	0700
Project No:	141617	**Time Out:**	1500
BC Personnel:	Bill Foster	**Weather:**	45° Sunny

South Soil Compaction Test Locations

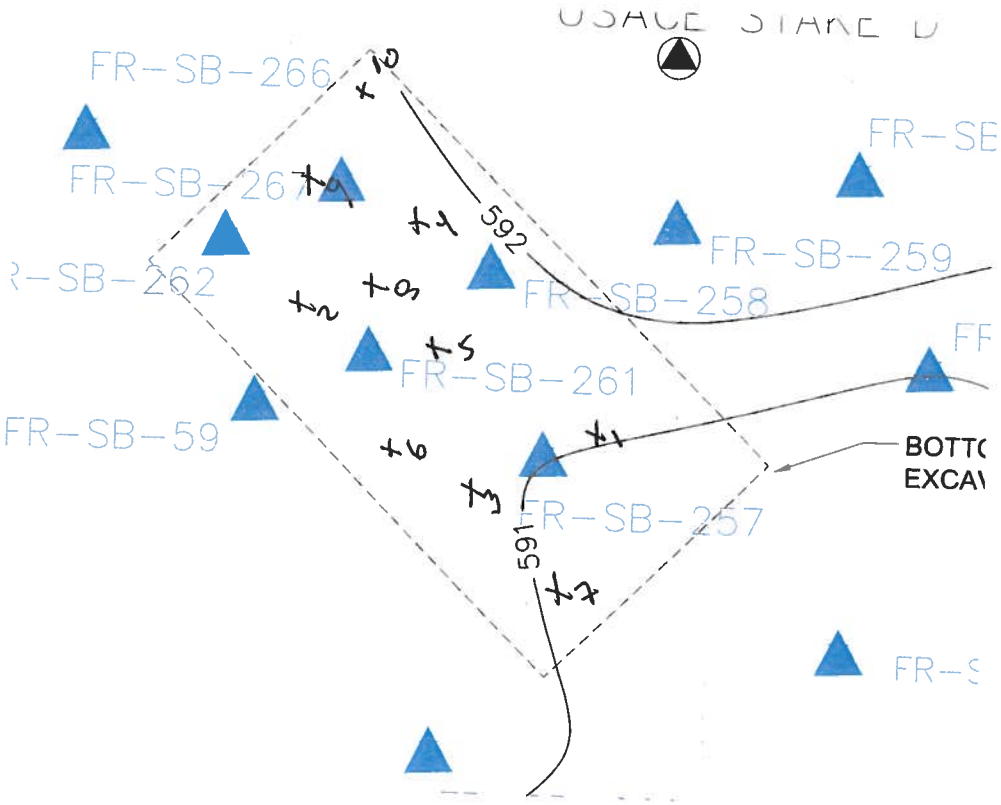

Attachments:

- ☐ Contractor Report
- ☐ Field Notes
- ☐ Other:

Bill Foster — 11/11/11

Signature of CQA Monitor — **Date**

Brown AND Caldwell

Daily Field Report

Site:	Ford Rd.	**Date:**	11/14/11 (Monday)
Project:	Phase 1 Remedial Action Work	**Time In:**	0700
Project No:	141617	**Time Out:**	1730
BC Personnel:	Bill Foster, Nate Givens	**Weather:**	65° Rainy

Items Worked On:

- ☐ Mobilization/Demobilization
- ☐ Temporary Erosion and Sedimentation Controls
- ☒ Site Preparation - Buttress soil @ North Soil Area
- ☐ Sedimentation Basin Construction
- ☐ Access Road Construction
- ☐ WWTP
- ☐ Cement-Bentonite Slurry Wall Construction
- ☐ North Soil Removal Area
- ☐ South Soil Removal Area
- ☒ River Bank Construction - Adjust Rip Rap
- ☐ Restoration
- ☒ Other - Decomission dewatering Pad - Weekly Erosion/Sed Control Inspection - Fix silt Fence

Contractor/Subcontractors/Visitors/Alterations:

Contractor(s) - OP-Tech
Subcontractor(s) - N/A
Visitor(s) - N/A
Phone Call(s) - Elena Goodwell, Rich Isaac
Alteration(s) - N/A
Material Delivered - N/A

Summary of Work:

- on site
- Safety mtg
- meet w/Dave to discuss the days workplan
- OP-Tech is adjusting/adding some rip rap @ the south end, that extends about 6 feet into the flow of the river. This forces the flow of the water out away from the riverbank.
- OP-Tech decomissions the dewatering pad.
- OP-Tech grades the area of the dewatering pad.
- OP-Tech placed, the low perm soil that was peeled back away from the bank when rip rap was placed, & slopes it to the ex grade.
- OP-Tech finishes for the day.
- Nate & I do the weekly Erosion & Sed control inspection. OP-Tech fixes the areas of silt fence that were damaged.
- OP-Tech is offsite.
- Nate & I are offsite.

Attachments:

- ☐ Contractor Report
- ☐ Field Notes
- ☐ Other:

BW NG 11/14/11

Signature of CQA Monitor **Date**

Brown AND Caldwell

Daily Field Report

Site:	Ford Rd.	**Date:**	11/14/11 (Monday)
Project:	Phase 1 Remedial Action Work	**Time In:**	0700
Project No:	141617	**Time Out:**	1730
BC Personnel:	Bill Foster, Nate Givens	**Weather:**	65° Rainy

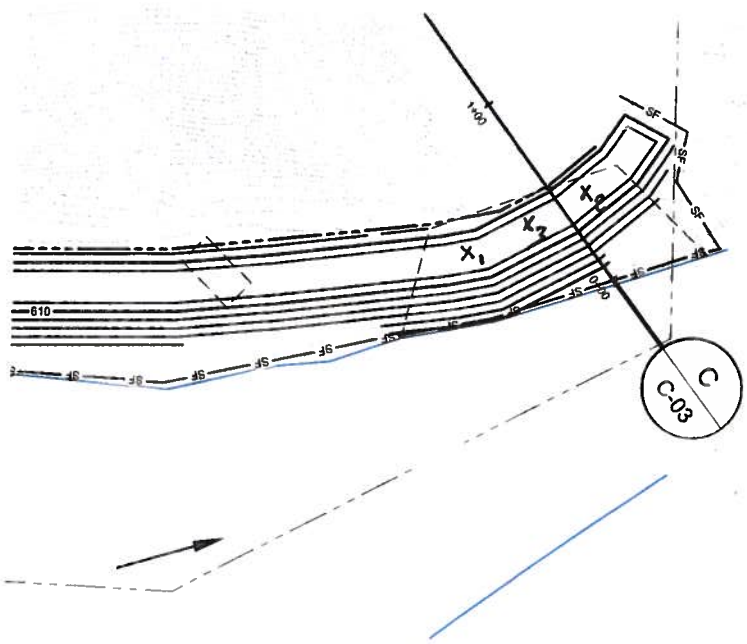

Attachments:

- ☐ Contractor Report
- ☐ Field Notes
- ☐ Other:

Bill Foster — **Signature of CQA Monitor**

11/14/11 — **Date**

Brown AND Caldwell

Daily Field Report

Site:	Ford Rd.	**Date:**	11-15-11 (TUESDAY)
Project:	Phase 1 Remedial Action Work	**Time In:**	0645
Project No:	141617	**Time Out:**	1715
BC Personnel:	B. FOSTER, N. GIVENS	**Weather:**	M. SUNNY, H · 60°F

Items Worked On:

- ☐ Mobilization/Demobilization
- ☒ Temporary Erosion and Sedimentation Controls
- ☐ Site Preparation
- ☐ Sedimentation Basin Construction
- ☐ Access Road Construction
- ☐ WWTP
- ☐ Cement-Bentonite Slurry Wall Construction
- ☐ North Soil Removal Area
- ☐ South Soil Removal Area
- ☐ River Bank Construction
- ☐ Restoration
- ☒ Other - PLACE SOIL ON SLOPE

Contractor/Subcontractors/Visitors/Alterations:

Contractor(s) - OP-TECH
Subcontractor(s) - N/A
Visitor(s) - VANESSA STEIGERWALD, ELENA GOODHALL
Phone Call(s) - RICK ISAAC
Alteration(s) - N/A
Material Delivered - N/A

Summary of Work:

- ~~ONSITE~~ GIVENS & FOSTER ONSITE.
- SAFETY MEETING.
- MET WITH DAVE CURRAN (OP-TECH) TO DISCUSS WORK PLAN.
- OP-TECH PLACED OVERBURDEN SOIL FROM STOCKPILE IN SED. BASIN ON SLOPE ABOVE 610' ELEVATION FOR WINTERIZATION.
- SAMPLED SOIL STOCKPILE #3 FOR LAB ANALYSIS PER SAMPLING PLAN AND SHIPPED SAMPLES TO THE LAB.
- BILL FOSTER LEFT THE SITE.
- VANESSA STEIGERWALD (OEPA) ONSITE. I WALKED THE SITE WITH HER.
- ELENA GOODHALL (BC) ONSITE. WEEKLY PROGRESS MEETING.
- VANESSA AND ELENA LEFT THE SITE.
- OP-TECH CLEARED TREES FROM SOUTH END OF SLOPE (NORTH OF HAUL ROAD) AND BEGAN PLACING SOIL FROM SED BASIN STOCKPILE FOR WINTERIZATION.
- OP-TECH AND I LEFT THE SITE.

Attachments:

- ☐ Contractor Report
- ☐ Field Notes
- ☐ Other:

Signature of CQA Monitor — Date: 11-15-11

Brown AND Caldwell

Daily Field Report

Site:	Ford Rd.	**Date:**	11-16-11 (WEDNESDAY)
Project:	Phase 1 Remedial Action Work	**Time In:**	0700
Project No:	141617	**Time Out:**	1730
BC Personnel:	N. GIVENS	**Weather:**	P. CLOUDY, H-50°F

Items Worked On:

- ☐ Mobilization/Demobilization
- ☒ Temporary Erosion and Sedimentation Controls
- ☐ Site Preparation
- ☐ Sedimentation Basin Construction
- ☐ Access Road Construction
- ☒ WWTP
- ☐ Cement-Bentonite Slurry Wall Construction
- ☐ North Soil Removal Area
- ☐ South Soil Removal Area
- ☐ River Bank Construction
- ☐ Restoration
- ☒ Other - RELOCATE/PLACE STOCKPILED SOIL ON SLOPE

Contractor/Subcontractors/Visitors/Alterations:

Contractor(s) - OP-TECH

Subcontractor(s) - N/A

Visitor(s) - N/A

Phone Call(s) - ELENA GOODHALL (BC)

Alteration(s) - N/A

Material Delivered - SILT FENCE, STRAW BALES

Summary of Work:

- ONSITE
- TAILGATE MEETING
- MET WITH DAVE CURRAN TO DISCUSS WORK PLAN
- OP-TECH RESUMED PLACEMENT OF SOIL ON SLOPE ABOVE 610' ELEVATION
- OP-TECH TREATED WATER FROM FRAC TANK AND DISCHARGED TO SANITARY SEWER
- OP-TECH COMPLETED SILT FENCE INSTALLATION ALONG RIVER BANK ABOVE RIP RAP
- OP-TECH LEFT THE SITE
- I LEFT THE SITE

Attachments:

- ☐ Contractor Report
- ☐ Field Notes
- ☐ Other:

Signature of CQA Monitor: [signature] Date: 11-16-11

Brown AND Caldwell

Daily Field Report

Site:	Ford Rd.	Date:	11-17-11 (THURSDAY)
Project:	Phase 1 Remedial Action Work	Time In:	0700
Project No:	141617	Time Out:	1700
BC Personnel:	N. GIVENS	Weather:	M. CLOUDY, H - 45°F

Items Worked On:

- ☐ Mobilization/Demobilization
- ☐ Temporary Erosion and Sedimentation Controls
- ☐ Site Preparation
- ☐ Sedimentation Basin Construction
- ☐ Access Road Construction
- ☐ WWTP
- ☐ Cement-Bentonite Slurry Wall Construction
- ☐ North Soil Removal Area
- ☐ South Soil Removal Area
- ☐ River Bank Construction
- ☐ Restoration
- ☒ Other - RELOCATE / PLACE SOIL STOCKPILE FROM SED. BASIN ABOVE 610'

Contractor/Subcontractors/Visitors/Alterations:

Contractor(s) - OP-TECH

Subcontractor(s) - N/A

Visitor(s) - N/A

Phone Call(s) - JIM PEEPLES (BC), ELENA GOODHALL (BC), RICK ISAAC (BC)

Alteration(s) - N/A

Material Delivered - N/A

Summary of Work:

- ONSITE.
- TAILGATE MEETING.
- OP-TECH RESUMED RELOCATION / PLACEMENT OF SOIL STOCKPILE LOCATED IN SED. BASIN TO SOUTH END OF EAST SLOPE ABOVE 610' ELEVATION.
- OP-TECH PERFORMED MAINTENANCE OF HAUL ROAD AND PREPPED TO RESUME SOIL RELOCATION TOMORROW (11-18-11).
- OP-TECH OFFSITE.
- OFFSITE.

Attachments:

- ☐ Contractor Report
- ☐ Field Notes
- ☐ Other:

Signature of CQA Monitor: [signature] Date: 11-17-11

Brown AND Caldwell

Daily Field Report

Site:	Ford Rd.	**Date:**	11-18-11 (Friday)
Project:	Phase 1 Remedial Action Work	**Time In:**	0700
Project No:	141617	**Time Out:**	1715
BC Personnel:	N. Givens / A. Minner	**Weather:**	50° - Sunny

Items Worked On:

- ☐ Mobilization/Demobilization
- ☐ Temporary Erosion and Sedimentation Controls
- ☐ Site Preparation
- ☒ Sedimentation Basin ~~Construction~~
- ☒ Access Road ~~Construction~~ maintenance
- ☐ WWTP
- ☐ Cement-Bentonite Slurry Wall Construction
- ☐ North Soil Removal Area
- ☐ South Soil Removal Area
- ☐ River Bank Construction
- ☐ Restoration
- ☒ Other - RELOCATE / PLACE SOIL FROM STOCKPILE IN SED. BASIN TO EAST SLOPE ABOVE 610' ELEVATION.

Contractor/Subcontractors/Visitors/Alterations:

Contractor(s) - OP-TECH
Subcontractor(s) - N/A
Visitor(s) - N/A
Phone Call(s) - RICK ISAAC (BC), ELENA GOODHALL (BC)
Alteration(s) - N/A
Material Delivered - N/A

Summary of Work:

- On site.
- Safety Meeting
- Met with Dave (OP-TECH) to discuss the days workplan.
- Op-Tech is relocating/placing soil stockpile from sed. basin to the east slope.
- Op-Tech cleared trees from the east slope, in order to place soil on the slope.
- Op-Tech maintains access rd.
- Nate Givens left the site.
- Met with Dave (OP-TECH) to discuss drainage plan.
- OP-TECH OFF SITE.
- I leave the site.

Attachments:

- ☐ Contractor Report
- ☐ Field Notes
- ☐ Other:

Amy Minner 11/18/11

Signature of CQA Monitor **Date**

Brown AND Caldwell

Daily Field Report

Site:	Ford Rd.	**Date:**	11-19-11 (Saturday)
Project:	Phase 1 Remedial Action Work	**Time In:**	0700
Project No:	141617	**Time Out:**	1715
BC Personnel:	A. Minner	**Weather:**	50° - Sunny A.M. - Rain P.M

Items Worked On:

- ☐ Mobilization/Demobilization
- ☐ Temporary Erosion and Sedimentation Controls
- ☐ Site Preparation
- ☒ Sedimentation Basin ~~Construction~~ maintenance for drainage purposes,
- ☐ Access Road Construction
- ☐ WWTP
- ☐ Cement-Bentonite Slurry Wall Construction
- ☐ North Soil Removal Area
- ☐ South Soil Removal Area
- ☐ River Bank Construction
- ☐ Restoration
- ☒ Other - Relocate/place soil from stockpile in sed. basin to east slope above 410' elev

Contractor/Subcontractors/Visitors/Alterations:

Contractor(s) - OP-TECH
Subcontractor(s) - N/A
Visitor(s) - N/A
Phone Call(s) - ELENA GOODHALL (BC)
Alteration(s) - N/A
Material Delivered - N/A

Summary of Work:

- On site
- Safety Meeting
- Met with Dave (OP-TECH) to discuss the days workplan.
- Op-Tech completed relocating / placing the soil stockpile from the sed. basin to the east slope (fill areas).
- Both areas on the slope were graded to smooth out the slope.
- The sed. basin was also graded partially for drainage purposes (so the area is less susceptible to being damaged with rain).
- OP-TECH to continue working on drainage Monday.
- OP. TECH left site.
- I left site.

Attachments:

- ☐ Contractor Report
- ☐ Field Notes
- ☐ Other:

Amy Minner 11/19/11

Signature of COA Monitor **Date**

Brown AND Caldwell

Daily Field Report

Site:	Ford Rd.	**Date:**	11-21-11 (MONDAY)
Project:	Phase 1 Remedial Action Work	**Time In:**	0645
Project No:	141617	**Time Out:**	1700
BC Personnel:	N. GIVENS	**Weather:**	M. SUNNY, H-50°F

Items Worked On:

- ☐ Mobilization/Demobilization
- ☐ Temporary Erosion and Sedimentation Controls
- ☐ Site Preparation
- ☐ Sedimentation Basin Construction
- ☐ Access Road Construction
- ☐ WWTP
- ☐ Cement-Bentonite Slurry Wall Construction
- ☐ North Soil Removal Area
- ☐ South Soil Removal Area
- ☐ River Bank Construction
- ☐ Restoration
- ☒ Other - INTERIM GRADING

Contractor/Subcontractors/Visitors/Alterations:

Contractor(s) - OP-TECH

Subcontractor(s) - N/A

Visitor(s) - ELENA GOODHALL (BC), JIM PEEPLES (BC)

Phone Call(s) - RICK ISAAC (BC)

Alteration(s) - N/A

Material Delivered - N/A

Summary of Work:

- GIVENS ONSITE
- MET WITH DAVE CURRAN (OP-TECH) TO DISCUSS TODAY'S WORK PLAN
- OP-TECH BEGAN DRESSING TEMPORARY HAUL ROAD FOR WINTER
- OP-TECH BEGAN GRADING SOIL STOCKPILES IN UPPER STAGING AREA TO PREP FOR ONE FOOT OF COVER SOIL
- OP-TECH WASHED EQUIPMENT AND PERFORMED GENERAL HOUSEKEEPING TASKS
- ELENA GOODHALL AND JIM PEEPLES ARRIVED ONSITE FOR SITE WALK
- ELENA AND JIM OFFSITE
- OP-TECH OFFSITE
- GIVENS OFFSITE

Attachments:

- ☐ Contractor Report
- ☐ Field Notes
- ☐ Other:

Signature of CQA Monitor: [signature] Date: 11-21-11

Brown AND Caldwell

Daily Field Report

Site:	Ford Rd.	**Date:**	11-22-11 (TUESDAY)
Project:	Phase 1 Remedial Action Work	**Time In:**	0700
Project No:	141617	**Time Out:**	1530
BC Personnel:	N. GIVENS	**Weather:**	CLOUDY AM, RAIN PM, H-50°F

Items Worked On:

- ☐ Mobilization/Demobilization
- ☐ Temporary Erosion and Sedimentation Controls
- ☐ Site Preparation
- ☐ Sedimentation Basin Construction
- ☐ Access Road Construction
- ☐ WWTP
- ☐ Cement-Bentonite Slurry Wall Construction
- ☐ North Soil Removal Area
- ☐ South Soil Removal Area
- ☐ River Bank Construction
- ☐ Restoration
- ☒ Other - INTERIM GRADING

Contractor/Subcontractors/Visitors/Alterations:

Contractor(s) - OP-TECH
Subcontractor(s) - N/A
Visitor(s) - RICK ISAAC (BC)
Phone Call(s) - RICK ISAAC
Alteration(s) - N/A
Material Delivered - N/A

Summary of Work:

- GIVENS ONSITE
- SAFETY MEETING
- MET WITH DAVE CURRAN TO DISCUSS WORK PLAN FOR THE DAY
- OP-TECH REALIGNED SURFACE DRAIN EAST OF SED. BASIN TO RUN PARALLEL TO SILT FENCE.
- OP-TECH ROUGH GRADED BOTTOM OF SED. BASIN FOR WINTERIZATION
- OP-TECH CONTINUED TO DECON MACHINERY
- RICK ISAAC (BC) ONSITE
- ONE CATERPILLAR 725 ARTICULATED DUMP TRUCK DEMOBILIZED
- WEEKLY PROGRESS MEETING
- RICK ISAAC OFFSITE
- OP-TECH OFFSITE
- GIVENS OFFSITE

Attachments:

- ☐ Contractor Report
- ☐ Field Notes
- ☐ Other:

Signature of CQA Monitor: [signature] Date: 11-22-11

Brown AND Caldwell

Daily Field Report

Site:	Ford Rd.	Date:	11-23-11 (WEDNESDAY)
Project:	Phase 1 Remedial Action Work	Time In:	0700
Project No:	141617	Time Out:	1400
BC Personnel:	N. GIVENS	Weather:	CLOUDY, H - 50°F

Items Worked On:

- ☐ Mobilization/Demobilization
- ☐ Temporary Erosion and Sedimentation Controls
- ☐ Site Preparation
- ☐ Sedimentation Basin Construction
- ☐ Access Road Construction
- ☐ WWTP
- ☐ Cement-Bentonite Slurry Wall Construction
- ☐ North Soil Removal Area
- ☐ South Soil Removal Area
- ☐ River Bank Construction
- ☐ Restoration
- ☒ Other - SPREAD SS-1 & SS-2, PREP FOR SOIL COVER

Contractor/Subcontractors/Visitors/Alterations:

Contractor(s) - OP-TECH

Subcontractor(s) - N/A

Visitor(s) - N/A

Phone Call(s) - RICK ISAAC (BC), ELENA GOUDHALL (BC)

Alteration(s) - N/A

Material Delivered - N/A

Summary of Work:

- GIVENS ONSITE
- SAFETY MEETING
- MET WITH DAVE CURRAN TO DISCUSS WORK PLAN
- OP-TECH SPREAD SOIL STOCKPILES 1 & 2 IN UPPER STAGING AREA TO PREP FOR 1' OF COVER SOIL
- OP-TECH LOADED UNUSED MATERIALS FOR TRANSPORT OFFSITE
- OP-TECH OFFSITE
- GIVENS OFFSITE

Attachments:

- ☐ Contractor Report
- ☐ Field Notes
- ☐ Other:

Signature of CQA Monitor: [signature] Date: 11-23-11

Brown AND Caldwell

Daily Field Report

Site:	Ford Rd.	**Date:**	11-28-11 (MONDAY)
Project:	Phase 1 Remedial Action Work	**Time In:**	0700
Project No:	141617	**Time Out:**	1630
BC Personnel:	N. GIVENS	**Weather:**	LIGHT RAIN, H-45°F

Items Worked On:

- ☐ Mobilization/Demobilization
- ☐ Temporary Erosion and Sedimentation Controls
- ☐ Site Preparation
- ☐ Sedimentation Basin Construction
- ☐ Access Road Construction
- ☐ WWTP
- ☐ Cement-Bentonite Slurry Wall Construction
- ☐ North Soil Removal Area
- ☐ South Soil Removal Area
- ☐ River Bank Construction
- ☐ Restoration
- ☒ Other - DECON/WASH MACHINERY

Contractor/Subcontractors/Visitors/Alterations:

Contractor(s) - OP-TECH

Subcontractor(s) - N/A

Visitor(s) -

Phone Call(s) - RICK ISAAC (BC), ELENA GOODHALL (BC), JIM PEEPLES (BC)

Alteration(s) - N/A

Material Delivered -

Summary of Work:

- GIVENS ONSITE
- SAFETY MEETING
- MET WITH DAVE CURRAN (OP-TECH) TO DISCUSS WORKPLAN FOR THE DAY
- OP-TECH WASHED EQUIPMENT FOR DEMOBILIZATION
- WEEKLY EROSION & SED. CONTROL INSPECTION: NO DEFICIENCIES OBSERVED
- OP-TECH OFFSITE
- GIVENS OFFSITE

Attachments:

- ☐ Contractor Report
- ☐ Field Notes
- ☐ Other:

[signature]	11-28-11
Signature of CQA Monitor	**Date**

Brown AND Caldwell

Daily Field Report

Site:	Ford Rd.	**Date:**	11-29-11 (TUESDAY)
Project:	Phase 1 Remedial Action Work	**Time In:**	0700
Project No:	141617	**Time Out:**	1530
BC Personnel:	N. GIVENS	**Weather:**	RAIN, H-50°F

Items Worked On:

- ☐ Mobilization/Demobilization
- ☐ Temporary Erosion and Sedimentation Controls
- ☐ Site Preparation
- ☐ Sedimentation Basin Construction
- ☐ Access Road Construction
- ☐ WWTP
- ☐ Cement-Bentonite Slurry Wall Construction
- ☐ North Soil Removal Area
- ☐ South Soil Removal Area
- ☐ River Bank Construction
- ☐ Restoration
- ☒ Other - WASH EQUIPMENT, RE-COVER SOIL STOCKPILE #3

Contractor/Subcontractors/Visitors/Alterations:

Contractor(s) - OP-TECH

Subcontractor(s) - N/A

Visitor(s) - CLARISSA GEREBY (OEPA)

Phone Call(s) - RICK ISAAC (OEC), ELENA GOODHALL (BC)

Alteration(s) - N/A

Material Delivered - N/A

Summary of Work:

- GIVENS ONSITE
- SAFETY MEETING
- MET WITH DAVE CURRAN (OP-TECH) TO DISCUSS WORK PLAN FOR THE DAY
- OP-TECH LEVELED SOIL STOCKPILE #3 WITHIN CONTAINMENT AREA AND COVERED WITH PLASTIC SHEETING
- CLARISSA GEREBY (OEPA) ONSITE TO CHECK ON PROJECT STATUS
- CLARISSA OFFSITE
- OP-TECH WASHED EQUIPMENT TO PREP FOR DEMOBILIZATION
- WEEKLY PROGRESS MEETING
- OP-TECH OFFSITE
- GIVENS OFFSITE

Attachments:

- ☐ Contractor Report
- ☐ Field Notes
- ☐ Other:

Signature of CQA Monitor: [signature] Date: 11-29-11

Brown AND Caldwell

Daily Field Report

Site:	Ford Rd.	**Date:**	11-30-11 (WEDNESDAY)
Project:	Phase 1 Remedial Action Work	**Time In:**	0700
Project No:	141617	**Time Out:**	1515
BC Personnel:	NATHAN GIVENS	**Weather:**	SNOW, H-40°F

Items Worked On:

- ☐ Mobilization/Demobilization
- ☐ Temporary Erosion and Sedimentation Controls
- ☐ Site Preparation
- ☐ Sedimentation Basin Construction
- ☐ Access Road Construction
- ☐ WWTP
- ☐ Cement-Bentonite Slurry Wall Construction
- ☐ North Soil Removal Area
- ☐ South Soil Removal Area
- ☐ River Bank Construction
- ☐ Restoration
- ☒ Other - FILL SAND BAGS FOR POLY-TARP BALLAST

Contractor/Subcontractors/Visitors/Alterations:

Contractor(s) - OP-TECH
Subcontractor(s) - N/A
Visitor(s) - BILL FREDERICK (USACE), JON KOLBER (USACE)
Phone Call(s) - RICK ISAAC (BC), ELENA GOODHALL (BC)
Alteration(s) - N/A
Material Delivered - N/A

Summary of Work:

- GIVENS ONSITE
- SAFETY MEETING
- MET WITH DAVE CURRAN (OP-TECH) TO DISCUSS WORK PLAN FOR THE DAY
- OP-TECH ~~FILLE~~ FILLED SAND BAGS FOR USE AS ~~BALL~~ BALLAST FOR POLY-TARP ON SLOPES
- RICK ISAAC (BC) ONSITE
- GIVENS OFFSITE
- OP-TECH SWEPT FORD ROAD NEAR SITE ENTRANCE AFTER ONE CATERPILLAR 320D LL EXCAVATOR DEMOBILIZED.
- BILL FREDERICK AND ~~JOHN~~ JON KOLBER (US ARMY CORPS OF ENGINEERS) ONSITE
- RICK WALKED THE SITE WITH BILL AND JON
- FREDERICK AND KOLBER OFFSITE
- OPTECH OFFSITE
- RICK ISAAC OFFSITE

Attachments:

- ☐ Contractor Report
- ☐ Field Notes
- ☐ Other:

[signature] 11-30-11

Signature of CQA Monitor **Date**

Brown AND Caldwell

Daily Field Report

Site:	Ford Rd.	**Date:**	12-1-11 (THURSDAY)
Project:	Phase 1 Remedial Action Work	**Time In:**	0700
Project No:	141617	**Time Out:**	1630
BC Personnel:	N. GWENS	**Weather:**	M. SUNNY, H. 45°F

Items Worked On:

- ☐ Mobilization/Demobilization
- ☐ Temporary Erosion and Sedimentation Controls
- ☐ Site Preparation
- ☐ Sedimentation Basin Construction
- ☐ Access Road Construction
- ☐ WWTP
- ☐ Cement-Bentonite Slurry Wall Construction
- ☐ North Soil Removal Area
- ☐ South Soil Removal Area
- ☐ River Bank Construction
- ☐ Restoration
- ☒ Other - DEPLOY POLY-TARP ON NORTHERN SOIL PLACEMENT AREA OF EAST SLOPE

Contractor/Subcontractors/Visitors/Alterations:

Contractor(s) - OP-TECH

Subcontractor(s) - N/A

Visitor(s) - N/A

Phone Call(s) - RICK ISAAC (BC)

Alteration(s) - N/A

Material Delivered - N/A

Summary of Work:

- GWENS ONSITE
- SAFETY MEETING
- MET WITH DAVE CURRAN (OP-TECH) TO DISCUSS WORK PLAN FOR THE DAY
- SURVEYOR ONSITE TO SET GRADE STAKES IN UPPER STAGING AREA AND PERFORM AS-BUILT SURVEY
- OP-TECH DUG ANCHOR TRENCHES FOR RIPSTOP POLY-TARP ON SLOPES BY HAND
- OP-TECH DEPLOYED POLY-TARP ON NORTH SOIL PLACEMENT AREA ON EAST SLOPE
- OP-TECH SECURED TOP EDGE OF POLY TARP IN ANCHOR TRENCH, ~~AND~~ PINNED POLY-TARP WITH LANDSCAPING STAPLES AND BALLASTED TARP WITH SANDBAGS
- SURVEYOR OFFSITE
- OP-TECH OFFSITE
- GWENS OFFSITE

Attachments:

- ☐ Contractor Report
- ☐ Field Notes
- ☐ Other:

[signature] 12-1-11

Signature of CQA Monitor **Date**

Brown AND Caldwell

Daily Field Report

Site:	Ford Rd.	**Date:**	12-2-11
Project:	Phase 1 Remedial Action Work	**Time In:**	0700
Project No:	141617	**Time Out:**	1700
BC Personnel:	N. GIVENS	**Weather:**	CLOUDY, H-40°F

Items Worked On:

- ☐ Mobilization/Demobilization
- ☐ Temporary Erosion and Sedimentation Controls
- ☐ Site Preparation
- ☐ Sedimentation Basin Construction
- ☐ Access Road Construction
- ☐ WWTP
- ☐ Cement-Bentonite Slurry Wall Construction
- ☐ North Soil Removal Area
- ☐ South Soil Removal Area
- ☐ River Bank Construction
- ☐ Restoration
- ☒ Other - DEPLOY POLY-TARP ON SOUTHERN SOIL PLACEMENT AREA OF EAST SLOPE

Contractor/Subcontractors/Visitors/Alterations:

Contractor(s) - OP-TECH
Subcontractor(s) - N/A
Visitor(s) - N/A
Phone Call(s) - JM PEEPLES (BC)
Alteration(s) - N/A
Material Delivered - N/A

Summary of Work:

- GIVENS ONSITE
- SAFETY MEETING
- MET WITH DAVE CURRAN (OP-TECH) TO DISCUSS WORKPLAN FOR THE DAY
- OP-TECH REPAIRED DAMAGED SECTIONS OF SILT FENCE ALONG RIVER
- OP-TECH DEPLOYED RIP-STOP POLY-TARP ON SOUTHERN SOIL PLACEMENT AREA OF EAST SLOPE
- OP-TECH OFFSITE
- GIVENS OFFSITE

Attachments:

- ☐ Contractor Report
- ☐ Field Notes
- ☐ Other:

Signature of CQA Monitor — Date: 12-2-11

Brown AND Caldwell

Daily Field Report

Site:	Ford Rd.	Date:	12/05/11 (Monday)
Project:	Phase 1 Remedial Action Work	Time In:	0700
Project No:	141617	Time Out:	1700
BC Personnel:	Bill Foster	Weather:	45° Rain

Items Worked On:

- ☐ Mobilization/Demobilization
- ☒ Temporary Erosion and Sedimentation ~~Controls~~ Maintenance
- ☐ Site Preparation
- ☐ Sedimentation Basin Construction
- ☐ Access Road Construction
- ☐ WWTP
- ☐ Cement-Bentonite Slurry Wall Construction
- ☐ North Soil Removal Area
- ☐ South Soil Removal Area
- ☐ River Bank Construction
- ☐ Restoration
- ☒ Other – weekly Erosion + Sediment Control Inspection
  - Site Maintenance (Re-cover soil on slope w/plastic) + Fix Silt Fence

Contractor/Subcontractors/Visitors/Alterations:

Contractor(s) - OP-Tech
Subcontractor(s) - N/A
Visitor(s) - N/A
Phone Call(s) - Elena Goodhall, Rick Isaac
Alteration(s) - N/A
Material Delivered - willow stakes, Plastic Tarp

Summary of Work:

- on site
- Safety mtg.
- meet w/ Aaron to discuss the days workplan.
- The plastic on the soil, that was placed on the slope (near the south access rd), was messed up by wind over the weekend. OP-Tech is working on fixing it.
- I do the weekly erosion + sediment control inspection.
- A Few places of silt fence need fixed. Everything else is O.K.
- OP-Tech fixes the silt fence.
- OP-Tech decons the end dump + the excavator.
- ~~OP-Tech is at~~ willow stakes + plastic will be delivered/picked up tomorrow.
- OP-Tech is offsite.
- I leave the site.

Attachments:

- ☐ Contractor Report
- ☐ Field Notes
- ☐ Other:

BN [illegible] 12/05/11

Signature of CQA Monitor — Date

Brown AND Caldwell

Daily Field Report

Site:	Ford Rd.	Date:	12/06/11 (Tuesday)
Project:	Phase 1 Remedial Action Work	Time In:	0700
Project No:	141617	Time Out:	1700
BC Personnel:	Bill Foster	Weather:	45° Rain

Items Worked On:

- ☐ Mobilization/Demobilization
- ☐ Temporary Erosion and Sedimentation Controls
- ☐ Site Preparation
- ☐ Sedimentation Basin Construction
- ☐ Access Road Construction
- ☐ WWTP
- ☐ Cement-Bentonite Slurry Wall Construction
- ☐ North Soil Removal Area
- ☐ South Soil Removal Area
- ☐ River Bank Construction
- ☐ Restoration
- ☑ Other - weekly Progress Mtg.

Contractor/Subcontractors/Visitors/Alterations:

Contractor(s) - OP-Tech
Subcontractor(s) - N/A Mike
Visitor(s) - Rick Isaac, Strub
Phone Call(s) - Rick Isaac, Elena Goodhall, Joe Novell.
Alteration(s) - N/A
Material Delivered - Willow Stakes, Plastic

- Material Delivery - Willow Stakes
- Plastic
- Finish re-covering Soil w/plastic
- Add sand bags for additional anchorage

Summary of Work:

- on site
- Safety mtg.
- Meet w/Aaron to discuss the days workplan.
- OP-Tech finishes deconning the end dump + the excavator.
- Rick Isaac is onsite.
- OP-Tech continues recovering / anchoring the plastic cover to the soil on the slope near the south / access rd.
- we have the weekly Progress Mtg. Rick Isaac + I attend, others call in.
- Willow stakes are delivered.
- OP-Tech gets the remaining plastic that is needed to cover soil areas.
- Rick Isaac is offsite.
- OP-Tech finishes covering the soil on the slope w/plastic. Sandbags are added to anchor the plastic down.
- OP-Tech is offsite.
- I leave the site.

Attachments:

- ☐ Contractor Report
- ☐ Field Notes
- ☐ Other:

BW 12/06/11

Signature of CQA Monitor — Date

Brown AND Caldwell

Daily Field Report

Site:	Ford Rd.	Date:	12/07/11 (Wed)
Project:	Phase 1 Remedial Action Work	Time In:	0700
Project No:	141617	Time Out:	1700
BC Personnel:	Bill Foster	Weather:	40° Overcast

Items Worked On:

- ☐ Mobilization/Demobilization
- ☐ Temporary Erosion and Sedimentation Controls
- ☐ Site Preparation
- ☐ Sedimentation Basin Construction
- ☐ Access Road Construction
- ☐ WWTP
- ☐ Cement-Bentonite Slurry Wall Construction
- ☐ North Soil Removal Area
- ☐ South Soil Removal Area
- ☐ River Bank Construction
- ☐ Restoration
- ☑ Other - Demobilize End Dump

Contractor/Subcontractors/Visitors/Alterations:

Contractor(s) - OP-Tech
Subcontractor(s) - N/A
Visitor(s) - N/A
Phone Call(s) - Rick Isaac, Jim Peeples
Alteration(s) - N/A
Material Delivered - Silt Fence - Picked up by OP-Tech

- Fill sand bags
- Get additional silt Fence
- Cleaned out Con-Ex box

Summary of Work:

- on site
- safety mtg.
- meet w/Aaron to discuss the days workplan.
- OP-Tech has the end dump demobilized.
- OP-Tech cleans out the Con-Ex box. It will be demobilized on Friday.
- OP-Tech fills sand bags, to use to anchor the plastic that will cover the two upper staging areas. They will place & anchor the plastic tomorrow.
- OP-Tech gets an additional 1000 feet of silt fence.
- OP-Tech finishes for the day & is offsite.
- I leave the site.

Attachments:

- ☐ Contractor Report
- ☐ Field Notes
- ☐ Other:

Signature of CQA Monitor: [signature] Date: 12/07/11

Brown AND Caldwell

Daily Field Report

Site:	Ford Rd.	Date:	12/08/11 (Thursday)
Project:	Phase 1 Remedial Action Work	Time In:	0700
Project No:	141617	Time Out:	1700
BC Personnel:	Bill Foster	Weather:	40° Sunny

Items Worked On:

- ☐ Mobilization/Demobilization
- ☐ Temporary Erosion and Sedimentation Controls
- ☐ Site Preparation
- ☐ Sedimentation Basin Construction
- ☐ Access Road Construction
- ☐ WWTP
- ☐ Cement-Bentonite Slurry Wall Construction
- ☐ North Soil Removal Area
- ☐ South Soil Removal Area
- ☐ River Bank Construction
- ☐ Restoration
- ☑ Other - - Demobilize Excavator
  - Cover Two upper staging areas w/plastic
  - After storm Erosion + Sed Control Inspection.

Contractor/Subcontractors/Visitors/Alterations:

Contractor(s) - OP-Tech
Subcontractor(s) - N/A
Visitor(s) - N/A
Phone Call(s) - Rick Isaac, Elena Goodhall
Alteration(s) - N/A
Material Delivered - N/A

Summary of Work:

- on site
- Safety Mtg.
- Meet w/Aaron to discuss the day's workplan.
- OP-Tech has the excavator demobilized. OP-Tech is having a mini excavator delivered tomorrow. They will use it to plant the willow stakes + to trench any silt fence that needs replaced.
- OP-Tech covers ~~the~~ 2 of the upper staging areas w/plastic.
- OP-Tech anchors the plastic w/ sandbags, 6" Pins, + aggregate.
- Aaron + I walk the site + do the after storm Erosion + Sediment Control Inspection. Silt fence needs repaired in 4 or 5 places, Drainage swales need cleaned out, + Straw bales need replaced. OP-Tech will fix this tomorrow + Saturday.
- OP-Tech is offsite.
- I leave the site.

Attachments:

- ☐ Contractor Report
- ☐ Field Notes
- ☐ Other:

Bill Foster 12/08/11

Signature of CQA Monitor — Date

Brown AND Caldwell

Daily Field Report

Site:	Ford Rd.	**Date:**	05/07/12 (Monday)
Project:	Phase 1 Remedial Action Work	**Time In:**	0645
Project No:	141617	**Time Out:**	1900
BC Personnel:	Bill Foster	**Weather:**	53°-76° Rainy → Sunny

Items Worked On:

- [x] Mobilization/Demobilization
- [ ] Temporary Erosion and Sedimentation Controls
- [ ] Site Preparation
- [ ] Sedimentation Basin Construction
- [ ] Access Road Construction
- [ ] WWTP
- [ ] Cement-Bentonite Slurry Wall Construction
- [ ] North Soil Removal Area
- [ ] South Soil Removal Area
- [ ] River Bank Construction
- [ ] Restoration
- [x] Other - Rip Rap Delivery

Contractor/Subcontractors/Visitors/Alterations:

- Fix tarps on upper surface

Contractor(s) - OP-Tech (3 guys)

Subcontractor(s) - N/A

Visitor(s) - Vanessa Steigerwald, Clarissa Gereby, Brian Holmes

Phone Call(s) - Jim Peeples, Rick Iscoe

Alteration(s) - N/A

Material Delivered - Rip Rap - 15 loads Equipment Delivered - CAT 320D w/claw Excavator
- CAT 725 End Dump

Summary of Work:

- on site
- Safety mtg.
- meet w/Aaron to discuss the days ~~work~~ workplan.
- OP-Tech & I recover the upper soil area w/the tarps that had blown off.
- Rip Rap is being delivered.
- A CAT 320D Excavator w/claw attachment & a CAT 725 End Dump are delivered.
- Vanessa & Clarissa stop by the site. They are going to residents, near the site, explaining Phase 2.
- OP-Tech hauls the riprap & stages it near the work area.
- Brian Holmes, Clarissa & Vanessa stop by again. They discuss Phase 2. They also discuss the public mtg this Thursday. They are offsite.
- OP-Tech is offsite.
- I leave the site.

Attachments:

- [ ] Contractor Report
- [ ] Field Notes
- [ ] Other:

Bill Foster 05/07/12

Signature of CQA Monitor **Date**

Brown AND Caldwell

Daily Field Report

Site:	Ford Rd.	**Date:**	05/08/12 (Tuesday)
Project:	Phase 1 Remedial Action Work	**Time In:**	0700
Project No:	141617	**Time Out:**	1800
BC Personnel:	Bill Foster	**Weather:**	59°-66° overcast

Items Worked On:

- ☐ Mobilization/Demobilization
- ☐ Temporary Erosion and Sedimentation Controls
- ☐ Site Preparation
- ☐ Sedimentation Basin Construction
- ☐ Access Road Construction
- ☐ WWTP
- ☐ Cement-Bentonite Slurry Wall Construction
- ☐ North Soil Removal Area
- ☐ South Soil Removal Area
- ☑ River Bank Construction
- ☐ Restoration
- ☑ Other - survey limits of riprap placement

Contractor/Subcontractors/Visitors/Alterations:

Contractor(s) - OP-Tech (3 guys)
Subcontractor(s) - Straub Surveying
Visitor(s) - N/A
Phone Call(s) - Jim Peeples, Rick Isaac
Alteration(s) - N/A
Material Delivered - N/A

Summary of Work:

- on site
- Safety mtg.
- Meet w/Aaron to discuss the days workplan.
- OP-Tech is waiting for the surveyor to arrive. It is raining & the surveyor won't be onsite for a couple of hours.
- OP-Tech wants to, against my advice, to start placing riprap befor the surveyor arrives. They begin to place rip rap.
- Surveyor onsite. I give him coordinates of pts on the 603 contour. He paints the line on the ex. riprap. He is offsite.
- OP-Tech places riprap the rest of the day.
- OP-Tech is offsite.
- I leave the site.

Attachments:

- ☐ Contractor Report
- ☐ Field Notes
- ☐ Other:

Bill Foster 05/08/12

Signature of CQA Monitor **Date**

Brown AND Caldwell

Daily Field Report

Site:	Ford Rd.	**Date:**	05/09/12 (Wed)
Project:	Phase 1 Remedial Action Work	**Time In:**	0700
Project No:	141617	**Time Out:**	1700
BC Personnel:	Bill Foster	**Weather:**	58°-67° P. Sunny

Items Worked On:

- ☐ Mobilization/Demobilization
- ☐ Temporary Erosion and Sedimentation Controls
- ☐ Site Preparation
- ☐ Sedimentation Basin Construction
- ☐ Access Road Construction
- ☐ WWTP
- ☐ Cement-Bentonite Slurry Wall Construction
- ☐ North Soil Removal Area
- ☐ South Soil Removal Area
- ☑ River Bank Construction - Place riprap
- ☑ Restoration - move willow stakes
- ☐ Other -

Contractor/Subcontractors/Visitors/Alterations:

Contractor(s) - OP-Tech (3 guys)
Subcontractor(s) - N/A
Visitor(s) - N/A
Phone Call(s) - Jim Peeples, Rick Isaac
Alteration(s) - N/A
Material Delivered - N/A

Summary of Work:

- on site
- safety mtg.
- meet w/Aaron to discuss the days workplan.
- OP-Tech continues to place riprap.
- OP-Tech digs the existing willow stakes up + sets them to the side. They will replant them tomorrow.
- OP-Tech finishes placing riprap. Survey will be here tomorrow to verify it is in the correct position.
- OP-Tech places fabric over the "riprap bench" + places approx 1.5 feet of soil over the fabric. This will provide enough soil to plant the willow stakes.
- OP-Tech is offsite.
- I leave the site.

Attachments:

- ☐ Contractor Report
- ☐ Field Notes
- ☐ Other:

Bill Foster — 05/09/12

Signature of CQA Monitor — **Date**

Brown AND Caldwell

Daily Field Report

Site:	Ford Rd.	Date:	05/10/12 (Thursday)
Project:	Phase 1 Remedial Action Work	Time In:	0700
Project No:	141617	Time Out:	1800
BC Personnel:	Bill Foster	Weather:	60°-70° Sunny

Items Worked On:

- ☐ Mobilization/Demobilization
- ☑ Temporary Erosion and Sedimentation Controls
- ☐ Site Preparation
- ☐ Sedimentation Basin Construction
- ☐ Access Road Construction
- ☐ WWTP
- ☐ Cement-Bentonite Slurry Wall Construction
- ☐ North Soil Removal Area
- ☐ South Soil Removal Area
- ☐ River Bank Construction
- ☑ Restoration willow stakes
- ☑ Other - Survey - Rip Rap As-Built

Contractor/Subcontractors/Visitors/Alterations:

Contractor(s) - OP-Tech (2 guys)
Subcontractor(s) - Straub Surveying
Visitor(s) - Pat Steerman, Jim Peeples, Bill Frederick, Demaree Collier, Clarissa Gereby
Phone Call(s) - Rick Isaac, Jim Peeples
Alteration(s) - N/A
Material Delivered - N/A

Summary of Work:

- on site
- safety mtg.
- meet w/Kenny + Jimmy to discuss the days workplan.
- Straub Surveying is onsite to survey the riprap + verify location.
- A few spots are low. OP-Tech adds riprap to bring it up to grade.
- Straub is offsite.
- OP-Tech replants the willow stakes.
- OP-Tech fixes the grading in the work area + fixes the ruts in the roadway.
- OP-Tech fixes/replaces silt fence where needed.
- Pat, Jim, Bill, Demaree + Clarissa are onsite. They have a public mtg @ 1900 tonight. They are offsite.
- OP-Tech is offsite.
- I leave the site.

Attachments:

- ☐ Contractor Report
- ☐ Field Notes
- ☐ Other:

Bill Foster — Signature of CQA Monitor

05/10/12 — Date

Phase II Remedial Action

THIS PAGE INTENTIONALLY LEFT BLANK.

Brown AND Caldwell

Daily Field Report

Site:	Ford Rd.	**Date:**	05/29/12 (Tuesday)
Project:	Phase 2 Remedial Action	**Time In:**	0645
Project No:	141617	**Time Out:**	1830
BC Personnel:	Bill Foster	**Weather:**	73°-83° overcast

Items Worked On:

- [x] Mobilization/Demobilization
- [ ] Temporary Erosion and Sedimentation Controls
- [x] Site Preparation - Clearing Trees
- [ ] Sedimentation Basin Construction
- [ ] Access Road Construction
- [ ] Seep Drain Construction
- [ ] Soil Buttress Construction
- [ ] Final Cap Construction
- [ ] River Bank Construction
- [ ] Vegetation
- [ ] Other -

Contractor/Subcontractors/Visitors/Alterations/Deliveries:

Contractor(s) - Haynes
Subcontractor(s) - H+H Land Clearing
Visitor(s) - Mark Haynes
Phone Call(s) - Rick Isaac
Alteration(s) - N/A John Deere 648E skidder
Material Delivered - N/A
Equipment Delivered - Komatsu 430FX w/Quadco felling head attachment.
Komatsu 228LC w/ a claw attachment.

Summary of Work:

- on site
- safety mtg.
- H+H is onsite.
- H+H has a Komatsu 430FX w/felling head attachment + a Komatsu 228LC w/a claw attachment delivered
- Mark Haynes is onsite. We walk the site. We discuss the project.
- Mark Haynes is offsite.
- H+H continue to clear trees.
- H+H has a John Deere 648E skidder delivered.
- H+H clears trees all day.
- H+H is offsite
- I leave the site.

Attachments:

- [ ] Contractor Report
- [ ] Field Notes
- [ ] Other:

BN Foster — Signature of CQA Monitor

05/29/12 — Date

Brown AND Caldwell

Daily Field Report

Site:	Ford Rd.	Date:	05/30/12 (Wed)
Project:	Phase 2 Remedial Action	Time In:	0700
Project No:	141617	Time Out:	1800
BC Personnel:	Bill Foster	Weather:	72°-85° Sunny

Items Worked On:

- [x] Mobilization/Demobilization - Site Trailer
- [ ] Temporary Erosion and Sedimentation Controls
- [x] Site Preparation - clearing
- [ ] Sedimentation Basin Construction
- [ ] Access Road Construction
- [ ] Seep Drain Construction
- [ ] Soil Buttress Construction
- [ ] Final Cap Construction
- [ ] River Bank Construction
- [ ] Vegetation
- [ ] Other -

Contractor/Subcontractors/Visitors/Alterations/Deliveries:

Contractor(s) - Haynes
Subcontractor(s) - H&H
Visitor(s) - N/A
Phone Call(s) - Rick Isaac
Alteration(s) - N/A
Material Delivered - N/A
Equipment Delivered - Site Trailer, chipper

Summary of Work:

- on site
- safety mtg.
- meet w/Dayton (H+H) to discuss the days workplan.
- H+H is going to be clearing trees all day.
- H+H has a chipper delivered.
- Haynes has a site trailer delivered.
- H+H continues to clear trees.
- H+H is offsite.
- I leave the site.

Attachments:

- [ ] Contractor Report
- [ ] Field Notes
- [ ] Other:

Bill Foster — Signature of CQA Monitor

05/30/12 — Date

Brown AND Caldwell

Daily Field Report

Site:	Ford Rd.	**Date:**	05/31/12 (Thursday)
Project:	Phase 2 Remedial Action	**Time In:**	0700
Project No:	141617	**Time Out:**	1800
BC Personnel:	Bill Foster	**Weather:**	75°-85° Sunny

Items Worked On:

- ☐ Mobilization/Demobilization
- ☐ Temporary Erosion and Sedimentation Controls
- ☑ Site Preparation - clearing
- ☐ Sedimentation Basin Construction
- ☐ Access Road Construction
- ☐ Seep Drain Construction
- ☐ Soil Buttress Construction
- ☐ Final Cap Construction
- ☐ River Bank Construction
- ☐ Vegetation
- ☑ Other - Entrance @ North, off of Ford Rd.

Contractor/Subcontractors/Visitors/Alterations/Deliveries:

Contractor(s) - Haynes
Subcontractor(s) - H & H
Visitor(s) - N/A
Phone Call(s) - Rich Isaac
Alteration(s) - N/A
Material Delivered - N/A
Equipment Delivered - N/A

Summary of Work:

- on site
- safety mtg.
- meet w/Peyton to discuss the days workplan
- H & H ~~[illegible]~~ plans on chipping wood all day. They will not be clearing any today.
- Haynes is onsite to install the north entrance off of Ford Rd. Haynes installs a 12" DIP for the culvert.
- Haynes & I discuss the project & walk the site.
- Haynes is offsite.
- H & H is offsite
- I leave the site.

Attachments:

- ☐ Contractor Report
- ☐ Field Notes
- ☐ Other:

Bill Foster — 05/31/12

Signature of CQA Monitor — Date

Brown AND Caldwell

Daily Field Report

Site:	Ford Rd.	Date:	06/01/12 (Friday)
Project:	Phase 2 Remedial Action	Time In:	0700
Project No:	141617	Time Out:	1700
BC Personnel:	Bill Foster	Weather:	65° - 80° Rainy

Items Worked On:

- ☐ Mobilization/Demobilization
- ☐ Temporary Erosion and Sedimentation Controls
- ☐ Site Preparation
- ☐ Sedimentation Basin Construction
- ☐ Access Road Construction
- ☐ Seep Drain Construction
- ☐ Soil Buttress Construction
- ☐ Final Cap Construction
- ☐ River Bank Construction
- ☐ Vegetation
- ☐ Other -

Contractor/Subcontractors/Visitors/Alterations/Deliveries:

Contractor(s) - Haynes
Subcontractor(s) - H+H
Visitor(s) - N/A
Phone Call(s) - Rick Isaac
Alteration(s) - N/A
Material Delivered - N/A
Equipment Delivered - Removed Komatsu 228 6C

Summary of Work:

- on site
- safety mtg.
- Too much rain, Haynes and H+H, both called off work.
- H+H removes the Komatsu 228 6C.
- Rains til about @ 1500.
- I walk the site & take photos.
- I leave the site.

Attachments:

- ☐ Contractor Report
- ☐ Field Notes
- ☐ Other:

BWFoster 06/01/12

Signature of CQA Monitor — Date

Brown AND Caldwell

Daily Field Report

Site:	Ford Rd.	**Date:**	06/04/12 (Monday)
Project:	Phase 2 Remedial Action	**Time In:**	0700
Project No:	141617	**Time Out:**	1700
BC Personnel:	Bill Foster	**Weather:**	60°-70° Sunny

Items Worked On:

- ☐ Mobilization/Demobilization
- ☐ Temporary Erosion and Sedimentation Controls
- ☐ Site Preparation
- ☐ Sedimentation Basin Construction
- ☐ Access Road Construction
- ☐ Seep Drain Construction
- ☐ Soil Buttress Construction
- ☐ Final Cap Construction
- ☐ River Bank Construction
- ☐ Vegetation
- ☑ Other - Pre construction Meeting

Contractor/Subcontractors/Visitors/Alterations/Deliveries:

Contractor(s) - Haynes
Subcontractor(s) - H+H
Visitor(s) - See Pre Construction Mtg sign in sheet
Phone Call(s) - N/A
Alteration(s) - N/A
Material Delivered - N/A
Equipment Delivered - Removed Chipper

Summary of Work:

- on site
- safety mtg.
- No work is being done onsite today.
- Pre-con mtg begins @ 1000 & is held @ a shelter house at the park, across the street.
- After the mtg everyone goes to the site & we walk the site & discuss the project.
- Everyone is offsite except Haynes const. & myself.
- We discuss the project in greater detail.
- Haynes is offsite.
- I leave the site.

Attachments:

- ☐ Contractor Report
- ☐ Field Notes
- ☐ Other:

Bill Foster — 06/04/12

Signature of CQA Monitor — Date

Brown AND Caldwell

Daily Field Report

Site:	Ford Rd.	**Date:**	06/05/12 (Tuesday)
Project:	Phase 2 Remedial Action	**Time In:**	0700
Project No:	141617	**Time Out:**	1800
BC Personnel:	Bill Foster	**Weather:**	60°-73° Sunny

Items Worked On:

- ☐ Mobilization/Demobilization
- ☐ Temporary Erosion and Sedimentation Controls
- ☑ Site Preparation - Clearing
- ☐ Sedimentation Basin Construction
- ☐ Access Road Construction
- ☐ Seep Drain Construction
- ☐ Soil Buttress Construction
- ☐ Final Cap Construction
- ☐ River Bank Construction
- ☐ Vegetation
- ☐ Other -

Contractor/Subcontractors/Visitors/Alterations/Deliveries:

Contractor(s) - Haynes
Subcontractor(s) - H + H
Visitor(s) - N/A
Phone Call(s) - Rick Isaac
Alteration(s) - N/A
Material Delivered - N/A
Equipment Delivered - N/A

Summary of Work:

- on site
- Safety mtg.
- H + H calls & tells me that they will not be onsite until around lunchtime.
- I hang around the site til 1230, and take a lunch.
- H + H shows up onsite at 1415.
- H + H has 3 guys clearing trees.
- H + H clears until they leave the site.
- I leave the site.

Attachments:

- ☐ Contractor Report
- ☐ Field Notes
- ☐ Other:

Bill Foster 06/05/12

Signature of CQA Monitor — Date

Brown AND Caldwell

Daily Field Report

Site:	Ford Rd.	**Date:**	06/06/12 (Wed)
Project:	Phase 2 Remedial Action	**Time In:**	0700
Project No:	141617	**Time Out:**	1900
BC Personnel:	Bill Foster	**Weather:**	60°-75° Sunny

Items Worked On:

- ☐ Mobilization/Demobilization
- ☐ Temporary Erosion and Sedimentation Controls
- ☑ Site Preparation - Clear trees
- ☐ Sedimentation Basin Construction
- ☐ Access Road Construction
- ☐ Seep Drain Construction
- ☐ Soil Buttress Construction
- ☐ Final Cap Construction
- ☐ River Bank Construction
- ☐ Vegetation
- ☑ Other - Survey

Contractor/Subcontractors/Visitors/Alterations/Deliveries:

Contractor(s) - Haynes
Subcontractor(s) - H+H, KS + Assoc. Inc.
Visitor(s) - N/A
Phone Call(s) - Rich Isaac
Alteration(s) - N/A
Material Delivered - N/A
Equipment Delivered - N/A

Summary of Work:

- on site
- Safety mtg.
- H+H is continuing to clear trees. They have 3 guys onsite.
- Haynes is onsite to check on the progress of H+H.
- Haynes is offsite
- KS is onsite to establish control for surveying.
- KS establishes control points all around the site. They will be back tomorrow to topo the site.
- Haynes is back onsite, checking on H+H again.
- Haynes is offsite.
- H+H clears the remaining trees off the slopes. Tomorrow they will grind stumps + chip.
- H+H is offsite.
- I leave the site.

Attachments:

- ☐ Contractor Report
- ☐ Field Notes
- ☐ Other:

Bill Foster — Signature of CQA Monitor

06/06/12 — Date

Brown AND Caldwell

Daily Field Report

Site:	Ford Rd.	Date:	06/07/12 (Thursday)
Project:	Phase 2 Remedial Action	Time In:	0700
Project No:	141617	Time Out:	1700
BC Personnel:	Bill Foster	Weather:	65°-75° sunny

Items Worked On:

- ☐ Mobilization/Demobilization
- ☐ Temporary Erosion and Sedimentation Controls
- ☐ Site Preparation
- ☐ Sedimentation Basin Construction
- ☐ Access Road Construction
- ☐ Seep Drain Construction
- ☐ Soil Buttress Construction
- ☐ Final Cap Construction
- ☐ River Bank Construction
- ☐ Vegetation
- ☑ Other - Survey

Contractor/Subcontractors/Visitors/Alterations/Deliveries:

Contractor(s) - Haynes
Subcontractor(s) - KS, Ohio Edison
Visitor(s) - Kevin Kirsch (Elyria Water Dept.)
Phone Call(s) - Rick Isaac
Alteration(s) - N/A
Material Delivered - N/A
Equipment Delivered - CAT D6R, Kobelco 235 SR LC Excavator

Summary of Work:

- on site
- safety mtg.
- meet w/Dave to discuss the days workplan.
- KS is onsite to tipo, pre construction.
- ohio Edison is onsite to hook electric up to the site trailer.
- They cant hook up the electric because the span between the pole on ford rd, & the pole by the site trailer is too great.
- Ohio Edison is offsite.
- Kevin Kirsch is onsite to discuss using a hydrant for water for the water truck. A backflow preventer is not necessary, but the water truck must have an air gap on the tank. Roger Cehavon will inspect prior to using. Kevin is offsite.
- KS is offsite.
- Haynes has a CAT D6R Dozer & a Kobelco 235 SRLC Excavator delivered
- Haynes is offsite.
- I leave the site.

Attachments:

- ☐ Contractor Report
- ☐ Field Notes
- ☐ Other:

Bill Foster — Signature of CQA Monitor

06/07/12 — Date

Brown AND Caldwell

Daily Field Report

Site:	Ford Rd.	**Date:**	06/08/12 (Friday)
Project:	Phase 2 Remedial Action	**Time In:**	0700
Project No:	141617	**Time Out:**	1800
BC Personnel:	Bill Foster	**Weather:**	60°-80° Sunny

Items Worked On:

- ☐ Mobilization/Demobilization
- ☐ Temporary Erosion and Sedimentation Controls
- ☑ Site Preparation - chipping
- ☐ Sedimentation Basin Construction
- ☑ Access Road Construction
- ☐ Seep Drain Construction
- ☑ Soil Buttress Construction
- ☐ Final Cap Construction
- ☐ River Bank Construction
- ☐ Vegetation
- ☑ Other - Survey - topo

Contractor/Subcontractors/Visitors/Alterations/Deliveries:

Contractor(s) - Haynes — 160 Trucks
Subcontractor(s) - H+H, KS
Visitor(s) - Dave Rothgery (City of Elyria water Dept.)
Phone Call(s) - Jim Peeples, Rick Isaac
Alteration(s) - N/A
Material Delivered - Steep slope Fill, Principle spillway + outlet pipe
Equipment Delivered - Cat 815B sheepsfoot compactor, wood chipper, Komatsu 228LC

Summary of Work:

- on site
- safety mtg.
- meet w/Dave to discuss the days workplan.
- H+H is chipping wood.
- KS is finishing the topo.
- Haynes is having soil delivered + they are dumping @ the north access rd. Haynes uses a dozer to push the soil + place the soil in 8" loose/6" compacted lifts. A sheepsfoot compacts the soil.
- Haynes has an excavator maintain drainage ditch.
- First test I take fails because moisture was above the limits.
- Haynes compacts some more, I retest + it passes.
- KS is offsite.
- H+H is offsite
- Haynes continues to place/compact soil.
- I test the first 9 lifts today. All tests pass, except the first test.
- Haynes + I leave the site.

Attachments:

- ☐ Contractor Report
- ☐ Field Notes
- ☐ Other:

BN Foster — 06/08/12

Signature of CQA Monitor — **Date**

Brown AND Caldwell

Daily Field Report

Site:	Ford Rd.	Date:	06/11/12 (Monday)
Project:	Phase 2 Remedial Action	Time In:	0700
Project No:	142889	Time Out:	1900
BC Personnel:	Bill Foste / Julie McGowan	Weather:	65° - 82° Overcast

Items Worked On:

- [x] Mobilization/Demobilization - Electric to site trailer
- [ ] Temporary Erosion and Sedimentation Controls
- [x] Site Preparation - Grinding/chipping
- [ ] Sedimentation Basin Construction
- [x] Access Road Construction
- [ ] Seep Drain Construction
- [ ] Soil Buttress Construction
- [ ] Final Cap Construction
- [ ] River Bank Construction
- [ ] Vegetation
- [x] Other - Topo

Contractor/Subcontractors/Visitors/Alterations/Deliveries:

Contractor(s) - Haynes

Subcontractor(s) - H&H, KS, Callihan, Geoshack

Visitor(s) - N/A

Phone Call(s) - Rick Isaac 204 Loads of Soil

Alteration(s) - N/A

Material Delivered - Steep slope fill

Equipment Delivered - Water Truck, CASE MX255 Tractor w/pull behind plow. Street Sweeper

Summary of Work:

- on site
- safety mtg.
- meet w/Dave to discuss the days workplan.
- Hauled soil from borrow area for the steep slope. 219 loads.
- Completed the weekly soil erosion and sediment control Inspection.
- BC completed compaction testing for the lifts placed.
- All tests passed.
- KS is onsite to finish the topo.
- KS is offsite
- H&H is grinding stumps.
- H&H is offsite.
- Haynes is offsite.
- I leave the site.

Attachments:

- [ ] Contractor Report
- [ ] Field Notes
- [ ] Other:

Julie McGowan 6/11/12

Signature of CQA Monitor Date

BN JT 06/11/12

Brown AND Caldwell

Daily Field Report

Site:	Ford Rd.	**Date:**	06/12/12
Project:	Phase 2 Remedial Action	**Time In:**	0700
Project No:	142889	**Time Out:**	1900
BC Personnel:	Julie McGowan	**Weather:**	High 78° Low 60°

Items Worked On:

- ☐ Mobilization/Demobilization
- ☐ Temporary Erosion and Sedimentation Controls
- ☐ Site Preparation
- ☐ Sedimentation Basin Construction
- ☒ Access Road Construction
- ☐ Seep Drain Construction
- ☒ Soil Buttress Construction
- ☐ Final Cap Construction
- ☐ River Bank Construction
- ☐ Vegetation
- ☐ Other -

Contractor/Subcontractors/Visitors/Alterations/Deliveries:

Contractor(s) - Haynes
Subcontractor(s) -
Visitor(s) - Rick Isaac, Clarissa Gere by EPA, Ohio Edison, Ohio Cat
Phone Call(s) - Rick Isaac, Weekly meeting
Alteration(s) - N/A
Material Delivered - N/A 30 Loads of Soil
Equipment Delivered - N/A 204

Summary of Work:

- Arrived on site along with the contractors.
- Safety meeting
- Met w/ Dave from Haynes Construction about the days
- work activities.
- Placing 8" loose lifts, compacted to 6" along the steep slope areas.
- BC tested all areas at 2 test per acre per lift.
- All tests passed.
- All soil came from borrow area in Sheffield Oh,
- Weekly meeting.
- ~~off site~~ - Haynes repaired silt fence in areas that were addressed in the weekly inspection.
- off Site

Attachments:

- ☐ Contractor Report
- ☐ Field Notes
- ☐ Other:

Julie McGowan 6/12/12
Signature of CQA Monitor **Date**

Brown AND Caldwell

Daily Field Report

Site:	Ford Rd.	**Date:**	06/13/12
Project:	Phase 2 Remedial Action	**Time In:**	0700
Project No:	142889	**Time Out:**	1330
BC Personnel:	Julie McGowan	**Weather:**	Sunny High 70° Low 48°

Items Worked On:

- ☐ Mobilization/Demobilization
- ☐ Temporary Erosion and Sedimentation Controls
- ☐ Site Preparation
- ☐ Sedimentation Basin Construction
- ☒ Access Road Construction
- ☐ Seep Drain Construction
- ☑ Soil Buttress Construction
- ☐ Final Cap Construction
- ☐ River Bank Construction
- ☐ Vegetation
- ☐ Other -

Contractor/Subcontractors/Visitors/Alterations/Deliveries:

Contractor(s) - Haynes
Subcontractor(s) - H+H, KS
Visitor(s) - Rick Isaac, Patt Steerman
Phone Call(s) - Rick Isaac,
Alteration(s) -
Material Delivered - 173 loads
Equipment Delivered - Morbark wood Hog 3800,

Summary of Work:

- Arrived on site along w/ the contractors
- Safety meeting
- Met with Haynes Construction about the days work activities
- KS on site staking out the steep slope elivations.
- H+H, removing the stumps along the slope, also chipping.
- Haynes continued hauling soil and placing lifts along the steep slope areas.
- Haynes dug up a few areas of the pond sediment berm, to check soil conditions.
- Haynes and Julie off site

Attachments:

- ☐ Contractor Report
- ☐ Field Notes
- ☐ Other:

Julie McGowan 6/13/12
Signature of CQA Monitor Date

Brown AND Caldwell

Daily Field Report

Site:	Ford Rd.	**Date:**	06-14-12
Project:	Phase 2 Remedial Action	**Time In:**	0700
Project No:	142889	**Time Out:**	1905
BC Personnel:	Julie McGowan	**Weather:**	High 80° Low 52 Sunny

Items Worked On:

- ☐ Mobilization/Demobilization
- ☐ Temporary Erosion and Sedimentation Controls
- ☐ Site Preparation
- ☐ Sedimentation Basin Construction
- ☒ Access Road Construction
- ☐ Seep Drain Construction
- ☒ Soil Buttress Construction
- ☐ Final Cap Construction
- ☐ River Bank Construction
- ☐ Vegetation
- ☐ Other -

Contractor/Subcontractors/Visitors/Alterations/Deliveries:

Contractor(s) - Haynes
Subcontractor(s) - KS
Visitor(s) - N/A
Phone Call(s) - Rick Isaac.
Alteration(s) - N/A
Material Delivered - Steep slope Fill
Equipment Delivered - N/A

Summary of Work:

- Arrived on site along with the Contractors.
- Safety meeting.
- Met w/ Dave from Haynes construction about the days work activities.
- Haynes brought the outlet channel area to grade near entrance.
- Haynes continued to haul soil and place lifts for the steep slope area.
- Haynes utilized the water truck for most of the day to control dust.
- off site.

Attachments:

- ☐ Contractor Report
- ☐ Field Notes
- ☐ Other:

Julie McGowan 6-14-12
Signature of CQA Monitor **Date**

Brown AND Caldwell

Daily Field Report

Site:	Ford Rd.	**Date:**	06-15-12
Project:	Phase 2 Remedial Action	**Time In:**	0700
Project No:	142889	**Time Out:**	1730
BC Personnel:	Julie McGowan	**Weather:**	Sunny High 83 Low 57

Items Worked On:

- ☐ Mobilization/Demobilization
- ☐ Temporary Erosion and Sedimentation Controls
- ☐ Site Preparation
- ☐ Sedimentation Basin Construction
- ☒ Access Road Construction
- ☐ Seep Drain Construction
- ☒ Soil Buttress Construction
- ☐ Final Cap Construction
- ☐ River Bank Construction
- ☐ Vegetation
- ☐ Other -

Contractor/Subcontractors/Visitors/Alterations/Deliveries:

Contractor(s) - Haynes
Subcontractor(s) -
Visitor(s) - Santino Picci - Tencate Geosynthetics
Phone Call(s) - Rick Isaac
Alteration(s) - N/A
Material Delivered - Pipe, steep slope Fill
Equipment Delivered - N/A

Summary of Work:

- Arrived on site along with Haynes construction.
- Safety meeting
- Met with Dave from Haynes about the days work activities.
- Continued hauling soil to the site.
- Placed fill at the north east section.
- Constructed a ramp for access to the sediment pond area.
- Santino Picci from Tencate Geosynthetics arrived to test the soil on the sediment pond berm.
- Stoped hauling soil at 1630.
- off site

Attachments:

- ☐ Contractor Report
- ☐ Field Notes
- ☐ Other:

Julie McGowan 6-15-12.
Signature of CQA Monitor **Date**

Brown AND Caldwell

Daily Field Report

Site:	Ford Rd.	Date:	06/18/12 (monday)
Project:	Phase 2 Remedial Action	Time In:	0700
Project No:	142889	Time Out:	1900
BC Personnel:	Bill Foster	Weather:	66° - 86° sunny turning to rain @ 1700.

Items Worked On:

- ☐ Mobilization/Demobilization
- ☐ Temporary Erosion and Sedimentation Controls
- ☐ Site Preparation
- ☐ Sedimentation Basin Construction
- ☐ Access Road Construction
- ☑ Seep Drain Construction
- ☐ Soil Buttress Construction
- ☐ Final Cap Construction
- ☐ River Bank Construction
- ☐ Vegetation
- ☐ Other -

Contractor/Subcontractors/Visitors/Alterations/Deliveries:

Contractor(s) - Haynes
Subcontractor(s) - Mark (Pipe Fusion)
Visitor(s) - Brian Holmes
Phone Call(s) - Rick Isaac
Alteration(s) - overExcavate to bottom of seep in an area near stony wall. (6' x 2' x 130')
Material Delivered - #57 stone
Equipment Delivered - 2 End Dumps - CAT 714

Summary of Work:

- on site.
- safety mtg.
- meet w/Dave to discuss the days workplan.
- Haynes is working on Excavating, installing, & backfilling the seep drain today. They have #57 stone delivered.
- Mark is onsite to fuse the pipe. He uses a McElroy (#14) butt fusion welder.
- Brian Holmes stops by to talk about the project.
- Haynes has 2 CAT 714 end dumps delivered.
- Haynes installs 840 feet of drain from the outlet to the north & they install 360 feet of drain from the outlet to the west. They still have 40 feet to finish tomorrow. Two air traps @ stations 2+80 + 5+60 are installed running north + one trap @ station 2+00 is installed running west.
- Haynes is offsite.
- I leave the site.

Attachments:

- ☐ Contractor Report
- ☐ Field Notes
- ☐ Other:

Bill Foster — Signature of CQA Monitor

06/18/12 — Date

Brown AND Caldwell

Daily Field Report

Site:	Ford Rd.	Date:	06/19/12 (Tuesday)
Project:	Phase 2 Remedial Action	Time In:	0700
Project No:	142889	Time Out:	1900
BC Personnel:	Bill Foster	Weather:	72°-92° Sunny

Items Worked On:

- ☐ Mobilization/Demobilization
- ☐ Temporary Erosion and Sedimentation Controls
- ☐ Site Preparation
- ☐ Sedimentation Basin Construction
- ☐ Access Road Construction
- ☒ Seep Drain Construction
- ☐ Soil Buttress Construction
- ☐ Final Cap Construction
- ☐ River Bank Construction
- ☐ Vegetation
- ☒ Other - Remove Sed Pond Embankment
  - Weekly Progress Mtg

Contractor/Subcontractors/Visitors/Alterations/Deliveries:

Contractor(s) - Haynes
Subcontractor(s) - N/A
Visitor(s) - Bill Fredericks, Rick Isaac, Brian Holmes, Clarissa Gereby
Phone Call(s) - Rick Isaac
Alteration(s) - Overexcavate seep near sed pond. (6'x2'x75')
Material Delivered - N/A
Equipment Delivered - N/A

Summary of Work:

- on site
- safety mtg.
- meet w/Dave to discuss the days workplan.
- Bill Fredericks is onsite.
- Haynes begins to remove the sed Pond Embankment.
- Haynes also finishes the seep drain. They install from station 3+60 to 4+00.
- Haynes overexcavates a trench (6'x2'x75'), below the normal trench dimensions, to collect the seep near the sed basin.
- we have our weekly progress mtg. Attendees are listed above as visitors.
- After the mtg, we walk the site & discuss the project.
- All visitors are offsite.
- Haynes continues removing the sed pond embankment.
- Haynes is offsite
- I leave the site.

Attachments:

- ☐ Contractor Report
- ☐ Field Notes
- ☐ Other:

[signature] 06/19/12

Signature of CQA Monitor — Date

Brown AND Caldwell

Daily Field Report

Site:	Ford Rd.	**Date:**	06/20/12 (wed)
Project:	Phase 2 Remedial Action	**Time In:**	0700
Project No:	142889	**Time Out:**	1900
BC Personnel:	Bill Foster	**Weather:**	72°-92° sunny

Items Worked On:

- ☐ Mobilization/Demobilization
- ☐ Temporary Erosion and Sedimentation Controls
- ☐ Site Preparation
- ☒ Sedimentation Basin Construction
- ☐ Access Road Construction
- ☐ Seep Drain Construction
- ☐ Soil Buttress Construction
- ☐ Final Cap Construction
- ☐ River Bank Construction
- ☐ Vegetation
- ☐ Other -

Contractor/Subcontractors/Visitors/Alterations/Deliveries:

Contractor(s) - Haynes
Subcontractor(s) - KS
Visitor(s) - Bill Fredericks
Phone Call(s) - Rick Isaac
Alteration(s) - N/A
Material Delivered - 050 RipRap, Sed Pond Embankment soil
Equipment Delivered - N/A

Summary of Work:

- on site
- safety mtg.
- meet w/ Dave to discuss the days workplan
- Haynes finishes removing the ex. sed pond embankment.
- Haynes begins building the new embankment.
- Bill Fredericks is onsite @ 0900. He leaves @ 1000.
- Haynes is hauling soil from behind the parks dept.
- Haynes continues to work on the sed pond embankment.
- Haynes places lift 1-3 today.
- I test each lift twice. All tests are w/in +/- 3% of optimum & greater than 95% of the compaction.
- Haynes had KS come to stake out points for horizontal & vertical control.
- KS is offsite.
- Haynes is offsite.
- I leave the site.

Attachments:

- ☐ Contractor Report
- ☐ Field Notes
- ☐ Other:

Bill Foster — Signature of CQA Monitor — Date 06/20/12

Brown AND Caldwell

Daily Field Report

Site:	Ford Rd.	**Date:**	06/21/12 (Thursday)
Project:	Phase 2 Remedial Action	**Time In:**	0700
Project No:	142889	**Time Out:**	1900
BC Personnel:	Bill Foster	**Weather:**	72°-92° Sunny

Items Worked On:

- ☐ Mobilization/Demobilization
- ☐ Temporary Erosion and Sedimentation Controls
- ☐ Site Preparation
- ☑ Sedimentation Basin Construction
- ☐ Access Road Construction
- ☐ Seep Drain Construction
- ☐ Soil Buttress Construction
- ☐ Final Cap Construction
- ☐ River Bank Construction
- ☐ Vegetation
- ☐ Other -

Contractor/Subcontractors/Visitors/Alterations/Deliveries:

Contractor(s) -	Haynes
Subcontractor(s) -	N/A
Visitor(s) -	N/A
Phone Call(s) -	Rick Isaac
Alteration(s) -	N/A
Material Delivered -	Sed Pond Embankment Soil
Equipment Delivered -	N/A

Summary of Work:

- on site
- safety mtg.
- Meet w/Dave to discuss the days workplan.
- Haynes continues to haul soil from behind the parks dept to place for the sed pond embankment.
- The seep drains have not had any seep liquid coming out of the ends of the drain pipes, yet!
- Haynes brings the material in 12yd-15yd on road dump trucks.
- The soil is dumped @ the sed basin. A Dozer places the material in 6" compacted lifts, 8" loose. The compactor makes at least 5 passes. This process is the same for all soil placed thus far.
- Haynes places lifts 4 + 5, + a small portion of lift 6.
- I test lifts 4 + 5, ~~twice~~ two times, each. I test lift 6 once. All tests pass.
- Haynes is offsite.
- I leave the site.

Attachments:

- ☐ Contractor Report
- ☐ Field Notes
- ☐ Other:

Bill Foster — Signature of CQA Monitor

06/21/22 — Date

Brown AND Caldwell

Daily Field Report

Site:	Ford Rd.	**Date:**	6-22-12
Project:	Phase 2 Remedial Action	**Time In:**	0700
Project No:	142889	**Time Out:**	1730
BC Personnel:	J. McGowan/B. Foster	**Weather:**	High 81° Low 58°

Items Worked On:

- ☐ Mobilization/Demobilization
- ☐ Temporary Erosion and Sedimentation Controls
- ☐ Site Preparation
- ☒ Sedimentation Basin Construction
- ☐ Access Road Construction
- ☐ Seep Drain Construction
- ☐ Soil Buttress Construction
- ☐ Final Cap Construction
- ☐ River Bank Construction
- ☐ Vegetation
- ☐ Other -

Contractor/Subcontractors/Visitors/Alterations/Deliveries:

Contractor(s) - Haynes
Subcontractor(s) - N/A
Visitor(s) - Parks dept.
Phone Call(s) - N/A
Alteration(s) - N/A
Material Delivered - Stone - D50, Sed Pond Embankment soil
Equipment Delivered - N/A

Summary of Work:

- Arrived on site along with the contractors.
- Safety meeting.
- Met with the contractors about the days work activities.
- Continued to haul soil from the parks dept. to the site.
- Installing sediment pond berm.
- Constructed a dike around pipe at the sediment pond.
- Completed lifts 6 and 7, using proctor SS-1.
- All tests passed.
- off site!

Attachments:

- ☐ Contractor Report
- ☐ Field Notes
- ☐ Other:

Julie McGowan 6-22-12
Signature of CQA Monitor Date

Brown AND Caldwell

Daily Field Report

Site:	Ford Rd.	**Date:**	06/25/12 (Monday)
Project:	Phase 2 Remedial Action	**Time In:**	0700
Project No:	142889	**Time Out:**	1,900
BC Personnel:	Bill Foster	**Weather:**	53°-72° P. Sunny

Items Worked On:

- ☐ Mobilization/Demobilization
- ☐ Temporary Erosion and Sedimentation Controls
- ☐ Site Preparation
- ☑ Sedimentation Basin Construction
- ☐ Access Road Construction
- ☐ Seep Drain Construction
- ☐ Soil Buttress Construction
- ☐ Final Cap Construction
- ☐ River Bank Construction
- ☐ Vegetation
- ☑ Other - Ford Rd culvert outlet channel

Contractor/Subcontractors/Visitors/Alterations/Deliveries:

Contractor(s) - Haynes
Subcontractor(s) - N/A
Visitor(s) - N/A
Phone Call(s) - Rick Isaac
Alteration(s) - N/A
Material Delivered - Sed Pond Embankment
Equipment Delivered - N/A

• Weekly Soil Erosion + Sedimentation Control Inspection log.

Summary of Work:

- on site.
- Safety mtg.
- meet w/Dave to discuss the days work activities.
- Haynes is hauling sed pond embankment soil from behind the Parks Dept. They are deploying Lift B ~~to~~ the sed basin.
- Haynes places 8 oz/sy geotextile in the bottom of the Ford Rd. Culvert outlet channel. 0 50 rip rap is placed over the geotextile
- Haynes has a hydraulic line in their excavator, at the Parks dept, blown. Trucks are being changed to start hauling soil from Camp Wahoo.
- Haynes stops on the sed pond + begins placing + compacting steep slope fill.
- Haynes continues placing steep slope the remainder of the day.
- Haynes is offsite.
- I leave the site.

Attachments:

- ☐ Contractor Report
- ☐ Field Notes
- ☐ Other:

Bill Foster — **Signature of CQA Monitor**

06/25/12 — **Date**

Brown AND Caldwell

Daily Field Report

Site:	Ford Rd.	**Date:**	06/26/12 (Tuesday)
Project:	Phase 2 Remedial Action	**Time In:**	0700
Project No:	142889	**Time Out:**	1900
BC Personnel:	Bill Foster	**Weather:**	56° - 77° Sunny

Items Worked On:

- ☐ Mobilization/Demobilization
- ☐ Temporary Erosion and Sedimentation Controls
- ☐ Site Preparation
- ☑ Sedimentation Basin Construction
- ☐ Access Road Construction
- ☐ Seep Drain Construction
- ☑ Soil Buttress Construction
- ☐ Final Cap Construction
- ☐ River Bank Construction
- ☐ Vegetation
- ☑ Other - weekly Progress Mtg.

Contractor/Subcontractors/Visitors/Alterations/Deliveries:

Contractor(s) - Haynes
Subcontractor(s) - N/A
Visitor(s) - Mark Haynes
Phone Call(s) - Rick Isaac, Bill Frederick (Texts)
Alteration(s) - N/A
Material Delivered - 10 rolls 8 oz/sy geotextile, 7 rolls 4 oz/sy geotextile, steep slope fill (Parks d
Equipment Delivered - N/A

Summary of Work:

- on site
- safety mtg.
- meet w/Dave to discuss the days workplan.
- Haynes is using soil from behind the parks dept to place steep slope fill in the river plain area.
- 10 rolls of 8 oz geotextile + 7 rolls of 4 oz geotextile are delivered.
- We have the weekly progress mtg.
- Haynes is placing steep slope fill near the sed. pond.
- I take 4 tests today, all of which pass.
- Haynes finishes up for the day + is ~~[illegible]~~ off site.
- I go catch up on some paperwork @ the site trailer.
- I leave the site.

Attachments:

- ☐ Contractor Report
- ☐ Field Notes
- ☐ Other:

Bill Foster — Signature of CQA Monitor

06/26/12 — Date

Brown AND Caldwell

Daily Field Report

Site:	Ford Rd.	Date:	06/27/12 (Wed)
Project:	Phase 2 Remedial Action	Time In:	0700
Project No:	142889	Time Out:	1900
BC Personnel:	Bill Foster	Weather:	65° - 86° Sunny

Items Worked On:

- ☐ Mobilization/Demobilization
- ☐ Temporary Erosion and Sedimentation Controls
- ☐ Site Preparation
- ☑ Sedimentation Basin Construction
- ☐ Access Road Construction
- ☐ Seep Drain Construction
- ☑ Soil Buttress Construction
- ☐ Final Cap Construction
- ☐ River Bank Construction
- ☐ Vegetation
- ☐ Other -

Contractor/Subcontractors/Visitors/Alterations/Deliveries:

Contractor(s) - Haynes
Subcontractor(s) - N/A
Visitor(s) - N/A
Phone Call(s) - Rick Isaac
Alteration(s) - N/A
Material Delivered - "A" Rip Rap
Equipment Delivered - N/A

Summary of Work:

- on site
- safety mtg.
- meet w/Dave to discuss the days workplan
- Haynes continues to haul ~~[illegible]~~ soil from behind the Parks Dept & place it on steep slope fill near the sed pond.
- Haynes is having "A" Rip Rap delivered.
- Haynes shapes the outside slope of the steep slope fill in the area where they will place the Type A Rip Rap.
- Haynes brings the inner edge of the pond up to the same elevation as the outer (embankment) edge. Haynes shapes the pond's slopes.
- Haynes moves to the lower river rd to continue placing lift II.
- There is a seep coming into the Ford Rd Culvert cutoff channel from the north & it smells like urine. I called Rick & explained.
- All compaction tests pass.
- Haynes is offsite.
- I leave the site.

Attachments:

- ☐ Contractor Report
- ☐ Field Notes
- ☐ Other:

BN [illegible] — Signature of CQA Monitor

06/27/12 — Date

Brown AND Caldwell

Daily Field Report

Site:	Ford Rd.	Date:	06/28/12 (Thursday)
Project:	Phase 2 Remedial Action	Time In:	0700
Project No:	142889	Time Out:	1900
BC Personnel:	Bill Foster	Weather:	73°-97° Sunny

Items Worked On:

- ☐ Mobilization/Demobilization
- ☐ Temporary Erosion and Sedimentation Controls
- ☐ Site Preparation
- ☑ Sedimentation Basin Construction
- ☐ Access Road Construction
- ☐ Seep Drain Construction
- ☑ Soil Buttress Construction
- ☐ Final Cap Construction
- ☑ River Bank Construction - Rip Rap Face (Hauled it down below)
- ☐ Vegetation
- ☐ Other -

Contractor/Subcontractors/Visitors/Alterations/Deliveries:

Contractor(s) - Haynes
Subcontractor(s) - N/A
Visitor(s) - C.J. Zak Company (3 guys) - Installers of green armor & Flexterra
Phone Call(s) - Rick Isaac, Mark Haynes
Alteration(s) - N/A
Material Delivered - steep slope fill from Parks Dept.
Equipment Delivered - N/A

Summary of Work:

- on site
- Safety mtg.
- meet w/Dave to discuss the days workplan.
- Haynes is continuing to haul steep slope fill from the Parks Dept. They pick up where they left off @ last night.
- Haynes is loading Type A Riprap into an end dump & hauling it to where they will place it on the face of the river bank.
- No liquid discharging from either seep drains
- Trying to find the source of our constant water flowing in the area of the sed pond outlet pipe. I went into the woods & found a watermain that was leaking (badly) & all of that water was coming onto our site.
- I notified Rick & Jim
- C.J. Zak (3 guys) are onsite to look @ the Ford Rd. culvert outlet channel
- ~~[illegible]~~ One test failed. Haynes reworked it & compacted it & it passed.
- ~~[illegible]~~ Zak is offsite.
- Haynes is offsite.
- I leave the site.

Attachments:

- ☐ Contractor Report
- ☐ Field Notes
- ☐ Other:

Bill Foster — Signature of CQA Monitor

06/28/12 — Date

~~Sunny~~
~~36~~ ~~[illegible]~~

Brown AND Caldwell

Daily Field Report

Site:	Ford Rd.	**Date:**	06/29/12 (Friday)
Project:	Phase 2 Remedial Action	**Time In:**	0700
Project No:	142889	**Time Out:**	1900
BC Personnel:	Bill Foster	**Weather:**	72°-89° Sunny

Items Worked On:

- ☐ Mobilization/Demobilization
- ☐ Temporary Erosion and Sedimentation Controls
- ☐ Site Preparation
- ☐ Sedimentation Basin Construction
- ☐ Access Road Construction
- ☐ Seep Drain Construction
- ☒ Soil Buttress Construction
- ☐ Final Cap Construction
- ☒ River Bank Construction Rip Rap Face
- ☐ Vegetation
- ☐ Other -

Contractor/Subcontractors/Visitors/Alterations/Deliveries:

Contractor(s) - Haynes
Subcontractor(s) - N/A
Visitor(s) - City of Elyria Water Dept + WWTP Dept.
Phone Call(s) - Rick Isaac
Alteration(s) - N/A
Material Delivered - N/A
Equipment Delivered - N/A

Summary of Work:

- on site.
- safety mtg.
- meet w/Dave to discuss the days workplan.
- Haynes continues w/soil buttress placement.
- Haynes begins placing the rip rap face above the ex. rip rap + willows.
- I notify the water dept + the WWTP of the watermain + forcemain leaks
- They both come onsite, I show them the leaks, + both say they will be in touch w/me to let me know their plans on fixing them.
- Haynes places about 6' of Rip Rap face today.
- All tests I take pass.
- I discuss pay app #1 w/Dave + Paul Miller.
- Haynes finishes shaping the inside slope of the sed pond embankment.
- Haynes is offsite.
- I leave the site.

Attachments:

- ☐ Contractor Report
- ☐ Field Notes
- ☐ Other:

Bill Foster — Signature of CQA Monitor
06/29/12 — Date

Terry
Korzan

Brown AND Caldwell

Daily Field Report

Site:	Ford Rd.	**Date:**	07/02/12 (Monday)
Project:	Phase 2 Remedial Action	**Time In:**	0700
Project No:	142889	**Time Out:**	1900
BC Personnel:	Bill Foster	**Weather:**	72°-89° Sunny

Items Worked On:

- ☐ Mobilization/Demobilization
- ☐ Temporary Erosion and Sedimentation Controls
- ☐ Site Preparation
- ☐ Sedimentation Basin Construction
- ☑ Access Road Construction Grading - South Access Rd.
- ☐ Seep Drain Construction
- ☑ Soil Buttress Construction
- ☐ Final Cap Construction
- ☐ River Bank Construction
- ☐ Vegetation
- ☑ Other - Sed control weekly Inspection.

Contractor/Subcontractors/Visitors/Alterations/Deliveries:

Contractor(s) - Haynes
Subcontractor(s) - N/A
Visitor(s) - Roger Lehman
Phone Call(s) - Rick Isaac, Terry Korzan, Aaron Klein
Alteration(s) - N/A
Material Delivered - Steep slope fill
Equipment Delivered - N/A

Summary of Work:

- on site.
- safety mtg.
- Meet w/Dave to discuss the days workplan.
- Haynes is having soil hauled from Camp Wahoo borrow source. They are placing it @ the south access rd. Haynes is ~~trying~~ trying to build the ramp to the pt. that the haul trucks can drive on it. Haynes finishes + begins placing the next lift of soil ~~[illegible]~~ but
- Elyria is beginning to work on the water main that is leaking. Roger Lehman stops + I discuss their workplan to fix it. They will fix the leak, receive the pipe, + do something about the drainage swale that is eroding the cover soil from their pipe.
- I leave Terry Korzan a message regarding the leaking FM.
- I do my weekly sed. control inspection. Silt Fence needs repaired + a drainage swale needs cleaned out.
- All compaction tests I take pass.
- Haynes is offsite.
- I leave the site.

Attachments:

- ☐ Contractor Report
- ☐ Field Notes
- ☐ Other:

BN [illegible] 07/02/12

Signature of CQA Monitor — Date

Brown AND Caldwell

Daily Field Report

Site:	Ford Rd.	Date:	07/03/12 (Tuesday)
Project:	Phase 2 Remedial Action	Time In:	0700
Project No:	142889	Time Out:	1500
BC Personnel:	Bill Foster	Weather:	72°-91° Cloudy - Rain

Items Worked On:

- ☐ Mobilization/Demobilization
- ☐ Temporary Erosion and Sedimentation Controls
- ☐ Site Preparation
- ☐ Sedimentation Basin Construction
- ☐ Access Road Construction
- ☐ Seep Drain Construction
- ☑ Soil Buttress Construction
- ☐ Final Cap Construction
- ☐ River Bank Construction
- ☐ Vegetation
- ☑ Other - Weekly Progress Mtg. - stockpiling topsoil

Contractor/Subcontractors/Visitors/Alterations/Deliveries:

Contractor(s) - Haynes
Subcontractor(s) - N/A
Visitor(s) - Rick Isaac, Jim Peeples, Joe Montello, Paul Miller, [redacted]
Phone Call(s) - Rick Isaac
Alteration(s) - N/A
Material Delivered - Steep Slope Fill
Equipment Delivered - N/A

Summary of Work:

- On Site
- Safety mtg.
- meet w/Dave to discuss the days workplan.
- Haynes is placing the next lift of soil buttress.
- Haynes is also shaping the outside [redacted] slope of the soil buttress.
- Haynes stockpiles topsoil @ the parks dept.
- Begins to rain.
- Haynes wraps up & has all of the trucks stop for the day. The trucks that are already en route, Haynes has them dump their loads up top, near the tarped area.
- Haynes is offsite.
- Jim Peeples, Rick Isaac, Joe Montello, & Paul Miller are onsite for the mtg.
- After the mtg, we walk the site (upper surface).
- Everyone is offsite.
- I leave the site.

Attachments:

- ☐ Contractor Report
- ☐ Field Notes
- ☐ Other:

Bill Foster — Signature of CQA Monitor — Date: 07/03/12

14 yds/truck 204 07/02
10 yds/truck 80 07/02

Brown AND Caldwell

Daily Field Report

Site:	Ford Rd.	Date:	07/05/12 (Thursday)
Project:	Phase 2 Remedial Action	Time In:	0700
Project No:	142889	Time Out:	1700
BC Personnel:	Bill Foster	Weather:	71°-92° Overcast

Items Worked On:

- ☐ Mobilization/Demobilization
- ☐ Temporary Erosion and Sedimentation Controls
- ☐ Site Preparation
- ☐ Sedimentation Basin Construction
- ☐ Access Road Construction
- ☐ Seep Drain Construction
- ☐ Soil Buttress Construction
- ☐ Final Cap Construction
- ☐ River Bank Construction
- ☐ Vegetation
- ☑ Other - Equipment Delivery - Soil Erosion + Sedimentation Control Inspection Log,

Contractor/Subcontractors/Visitors/Alterations/Deliveries:

Contractor(s) - Haynes
Subcontractor(s) - N/A
Visitor(s) - N/A
Phone Call(s) - Rick Isaac, Paul Miller, Aaron Klein
Alteration(s) - N/A
Material Delivered - N/A
Equipment Delivered - John Deere 304J Front End Loader

Summary of Work:

- on site.
- Safety Mtg.
- meet w/ Dave to discuss the days workplan.
- Its raining, + Haynes decides to call off work today.
- Haynes has a John Deer 304J Front End Loader delivered.
- Haynes is offsite.
- I hang around the site + do paperwork, expenses, etc.
- I walk the site + do a Soil Erosion + Sedimentation control (SESC) Inspection Log.
- I will discuss it w/Haynes tomorrow morning.
- I leave the site.

Attachments:

- ☐ Contractor Report
- ☐ Field Notes
- ☐ Other:

Bill Foster 07/05/12

Signature of CQA Monitor — Date

Brown AND Caldwell

Daily Field Report

Site:	Ford Rd.	Date:	07/06/12 (Friday)
Project:	Phase 2 Remedial Action	Time In:	0700
Project No:	142889	Time Out:	1900
BC Personnel:	Bill Foster	Weather:	71°-95° Sunny

Items Worked On:

- ☐ Mobilization/Demobilization
- ☐ Temporary Erosion and Sedimentation Controls
- ☐ Site Preparation
- ☐ Sedimentation Basin Construction
- ☐ Access Road Construction
- ☐ Seep Drain Construction
- ☐ Soil Buttress Construction
- ☑ Final Cap Construction
- ☐ River Bank Construction
- ☐ Vegetation
- ☑ Other → Dispose/cover Barrells from storage trailer.
  - strip topsoil @ upper surface.

Contractor/Subcontractors/Visitors/Alterations/Deliveries:

Contractor(s) - Haynes
Subcontractor(s) - N/A
Visitor(s) - N/A
Phone Call(s) - Rick Isaac
Alteration(s) - Testing Requirements for upper surface = 95% Modified, not standard
Material Delivered - upper surface (Final Cap) material
Equipment Delivered - John Deere 862 Scraper

Summary of Work:

- on site
- safety mtg.
- meet w/Dave to discuss the days workplan.
- Haynes is placing, due to the conditions of the site, upper surface material.
- Haynes is working the access rds w/the tractor + box plow, to try + get them passable for the on road dump trucks.
- Haynes has a John Deere 862 scraper delivered. They use it to strip topsoil @ the upper surface area.
- Haynes removes the barrells from the storage trailer + places them in the upper surface area + places soil over top of them. Then the soil is compacted.
- All tests I take today pass.
- Haynes finishes for the day + is offsite.
- I leave the site.

Attachments:

- ☐ Contractor Report
- ☐ Field Notes
- ☐ Other:

[signature] 07/06/12

Signature of CQA Monitor — Date

Brown AND Caldwell

Daily Field Report

Site:	Ford Rd.	Date:	07-07-12
Project:	Phase 2 Remedial Action	Time In:	0700
Project No:	142889	Time Out:	1200
BC Personnel:	J. McGowan	Weather:	High 95 Low 71

Items Worked On:

- ☐ Mobilization/Demobilization
- ☐ Temporary Erosion and Sedimentation Controls
- ☐ Site Preparation
- ☐ Sedimentation Basin Construction
- ☒ Access Road Construction
- ☐ Seep Drain Construction
- ☐ Soil Buttress Construction
- ☐ Final Cap Construction
- ☐ River Bank Construction
- ☐ Vegetation
- ☐ Other -

Contractor/Subcontractors/Visitors/Alterations/Deliveries:

Contractor(s) - Haynes
Subcontractor(s) - N/A
Visitor(s) - N/A
Phone Call(s) - Bill Foster
Alteration(s) - N/A
Material Delivered - N/A
Equipment Delivered - N/A

Summary of Work:

- Arrived on site along with Haynes.
- Safety Meeting
- Met with Haynes about the days work activities.
- Removed top soil to the top of the landfill and stockpiled.
- Dressing up side walls for the access road.
- No compaction testing was taken place.
- Haynes offsite
- I leave the site

Attachments:

- ☐ Contractor Report
- ☐ Field Notes
- ☐ Other:

Julie McGowan 7-7-12
Signature of CQA Monitor Date

Brown AND Caldwell

Daily Field Report

Site:	Ford Rd.	Date:	7-9-12
Project:	Phase 2 Remedial Action	Time In:	0700
Project No:	142889	Time Out:	1900
BC Personnel:	J. McGowan / B Foster	Weather:	Sunny High 81° Low 61°

Items Worked On:

- ☐ Mobilization/Demobilization
- ☐ Temporary Erosion and Sedimentation Controls
- ☐ Site Preparation
- ☐ Sedimentation Basin Construction
- ☐ Access Road Construction
- ☐ Seep Drain Construction
- ☑ Soil Buttress Construction
- ☑ Final Cap Construction
- ☐ River Bank Construction
- ☐ Vegetation
- ☐ Other -

Contractor/Subcontractors/Visitors/Alterations/Deliveries:

Contractor(s) - Haynes Construction
Subcontractor(s) - N/A
Visitor(s) - KS Surveyors
Phone Call(s) - Rick Israel
Alteration(s) - N/A
Material Delivered - soil cap / soil buttress
Equipment Delivered - N/A

Summary of Work:

- Arrived on site along w/ Haynes Construction.
- Safety meeting.
- Met with Jeff because Dave was not on site today.
- Talked about the days work activities.
- Haynes continued to place lifts at the top section of the Landfill, Hauling soil from sheffield borrow area.
- Also constructing a ramp fo dump trucks.

Attachments:

- ☐ Contractor Report
- ☐ Field Notes
- ☐ Other:

Julie McGowan 7-9-12
Signature of CQA Monitor Date

Brown AND Caldwell

Daily Field Report

Site:	Ford Rd.	Date:	07/10/12 (Tuesday)
Project:	Phase 2 Remedial Action	Time In:	0700
Project No:	142889	Time Out:	1900
BC Personnel:	Bill Foster	Weather:	62°-83° Sunny

Items Worked On:

- ☐ Mobilization/Demobilization
- ☐ Temporary Erosion and Sedimentation Controls
- ☐ Site Preparation
- ☐ Sedimentation Basin Construction
- ☐ Access Road Construction
- ☐ Seep Drain Construction
- ☑ Soil Buttress Construction
- ☑ Final Cap Construction
- ☐ River Bank Construction
- ☐ Vegetation
- ☑ Other: weekly progress mtg.

Contractor/Subcontractors/Visitors/Alterations/Deliveries:

Contractor(s) - Haynes
Subcontractor(s) - N/A
Visitor(s) - Bill Fredericks, Clarissa Gerety, Rick Isaac
Phone Call(s) - Rick Isaac
Alteration(s) - N/A
Material Delivered - Soil Buttress
Equipment Delivered - John Deere 862 scraper.

Summary of Work:

- on site.
- safety mtg.
- meet w/Dave to discuss the days workplan.
- Haynes is moving topsoil from behind the parks dept & stockpiling onsite.
- Haynes begins to remove topsoil from the upper surface area & also stockpile onsite.
- Haynes hauls soil from behind the parks dept & places on soil buttress material.
- Rick Isaac, Bill Fredericks & Clarissa Gerety are onsite.
- We have the weekly progress mtg.
- Rick & Clarissa are offsite.
- All tests I take today pass.
- Bill Fredericks is offsite.
- Haynes is offsite.
- I leave the site.

Attachments:

- ☐ Contractor Report
- ☐ Field Notes
- ☐ Other:

Bill Foster — Signature of CQA Monitor

07/10/12 — Date

Brown AND Caldwell

Daily Field Report

Site:	Ford Rd.	Date:	07/11/12 (Wed)
Project:	Phase 2 Remedial Action	Time In:	0700
Project No:	142889	Time Out:	1800
BC Personnel:	Bill Foster	Weather:	70°-90° sunny

Items Worked On:

- ☐ Mobilization/Demobilization
- ☐ Temporary Erosion and Sedimentation Controls
- ☐ Site Preparation
- ☐ Sedimentation Basin Construction
- ☐ Access Road Construction
- ☐ Seep Drain Construction
- ☐ Soil Buttress Construction
- ☑ Final Cap Construction
- ☐ River Bank Construction
- ☐ Vegetation
- ☐ Other -

Contractor/Subcontractors/Visitors/Alterations/Deliveries:

Contractor(s) - Haynes
Subcontractor(s) - N/A
Visitor(s) - N/A
Phone Call(s) - Rich Isaac
Alteration(s) - N/A
Material Delivered - upper surface material, topsoil (parks dept.)
Equipment Delivered - N/A

Summary of Work:

- on site
- safety mtg.
- Meet w/Dave to discuss the days workplan.
- Haynes is placing upper surface material, from behind the parks dept, mixing it with soil that they are removing from the upper surface area, that is over filled.
- I don't take any tests because Haynes is mixing the overfilled soil in w/the upper surface when they are placing it.
- Haynes continues this routine all day.
- Haynes is offsite.
- I leave the site.

Attachments:

- ☐ Contractor Report
- ☐ Field Notes
- ☐ Other:

Bill Foster — Signature of CQA Monitor

07/11/12 — Date

Brown AND Caldwell

Daily Field Report

Site:	Ford Rd.	Date:	07/12/12 (Thursday)
Project:	Phase 2 Remedial Action	Time In:	0700
Project No:	142889	Time Out:	1900
BC Personnel:	Bill Foster	Weather:	70°-96° sunny

Items Worked On:

- ☐ Mobilization/Demobilization
- ☐ Temporary Erosion and Sedimentation Controls
- ☐ Site Preparation
- ☐ Sedimentation Basin Construction
- ☐ Access Road Construction
- ☐ Seep Drain Construction
- ☐ Soil Buttress Construction
- ☒ Final Cap Construction
- ☐ River Bank Construction
- ☐ Vegetation
- ☐ Other -

Contractor/Subcontractors/Visitors/Alterations/Deliveries:

Contractor(s) - Haynes
Subcontractor(s) - N/A
Visitor(s) - N/A
Phone Call(s) - Rick Isaac
Alteration(s) - N/A
Material Delivered - upper surface material
Equipment Delivered - N/A

Summary of Work:

- on site
- safety mtg
- Meet w/Dave to discuss the days workplan.
- Haynes has exhausted all the soil from behind the parks dept.
- Haynes is bringing soil from camp wahoo.
- Haynes is mixing soil, like they did yesterday.
- I do not take any compaction tests.
- Haynes continues placing upper surface material the rest of the day.
- Haynes is offsite.
- I leave the site.

Attachments:

- ☐ Contractor Report
- ☐ Field Notes
- ☐ Other:

Bill Foster — Signature of CQA Monitor

07/12/12 — Date

Brown AND Caldwell

Daily Field Report

Site:	Ford Rd.	Date:	07/13/12 (Friday)
Project:	Phase 2 Remedial Action	Time In:	0700
Project No:	142889	Time Out:	1900
BC Personnel:	Bill Foster	Weather:	72°-88° Sunny

Items Worked On:

- ☐ Mobilization/Demobilization
- ☐ Temporary Erosion and Sedimentation Controls
- ☐ Site Preparation
- ☐ Sedimentation Basin Construction
- ☐ Access Road Construction
- ☐ Seep Drain Construction
- ☐ Soil Buttress Construction
- ☑ Final Cap Construction
- ☐ River Bank Construction
- ☐ Vegetation
- ☐ Other -

Contractor/Subcontractors/Visitors/Alterations/Deliveries:

Contractor(s) - Haynes
Subcontractor(s) - N/A
Visitor(s) - N/A
Phone Call(s) - Rick Isaac
Alteration(s) - N/A
Material Delivered - upper surface material
Equipment Delivered - N/A

Summary of Work:

- on site
- safety mtg.
- meet w/ Dave to discuss the days workplan.
- Haynes continues to haul upper surface material from camp walls.
- Haynes continues to mix the material with overfilled material that they are stripping from the upper surface area.
- I do not take any compaction tests, for this reason.
- Haynes continues this routine the rest of the day.
- Haynes is offsite
- I leave the site.

Attachments:

- ☐ Contractor Report
- ☐ Field Notes
- ☐ Other:

Bill Foster — Signature of CQA Monitor

07/13/12 — Date

Brown AND Caldwell

Daily Field Report

Site:	Ford Rd.	Date:	07/16/12 (Monday)
Project:	Phase 2 Remedial Action	Time In:	0700
Project No:	142889	Time Out:	1900
BC Personnel:	Bill Foster	Weather:	72°-92° Sunny

Items Worked On:

- ☐ Mobilization/Demobilization
- ☐ Temporary Erosion and Sedimentation Controls
- ☐ Site Preparation
- ☐ Sedimentation Basin Construction
- ☐ Access Road Construction
- ☐ Seep Drain Construction
- ☐ Soil Buttress Construction
- ☑ Final Cap Construction
- ☐ River Bank Construction
- ☐ Vegetation
- ☑ Other - shape outer slope of soil buttress

Contractor/Subcontractors/Visitors/Alterations/Deliveries:

Contractor(s) - Haynes
Subcontractor(s) - N/A
Visitor(s) - N/A
Phone Call(s) - Rick Isaac
Alteration(s) - N/A
Material Delivered - upper surface material
Equipment Delivered - N/A

Summary of Work:

- on site
- safety mtg.
- meet w/Dave to discuss the days workplan.
- Haynes is hauling upper surface material, from camp wahoo.
- Haynes is also shaping the outer slope of the soil buttress.
- Julie McBowan is onsite. She will be covering for me the remainder of the week.
- All tests I take today pass.
- Haynes is offsite.
- I leave the site.

Attachments:

- ☐ Contractor Report
- ☐ Field Notes
- ☐ Other:

[signature] 07/16/12

Signature of CQA Monitor — Date

Brown AND Caldwell

Daily Field Report

Site:	Ford Rd.	Date:	7-17-12
Project:	Phase 2 Remedial Action	Time In:	0700
Project No:	142889	Time Out:	1900
BC Personnel:	J. McGowan	Weather:	High 96 low 78

Items Worked On:

- ☐ Mobilization/Demobilization
- ☐ Temporary Erosion and Sedimentation Controls
- ☐ Site Preparation
- ☐ Sedimentation Basin Construction
- ☐ Access Road Construction
- ☐ Seep Drain Construction
- ☐ Soil Buttress Construction
- ☒ Final Cap Construction
- ☐ River Bank Construction
- ☐ Vegetation
- ☐ Other -

Contractor/Subcontractors/Visitors/Alterations/Deliveries:

Contractor(s) - Haynes
Subcontractor(s) - N/A
Visitor(s) - N/A
Phone Call(s) - Bill Foster, Rick Isaac / Meeting @ 1pm.
Alteration(s) - N/A
Material Delivered - N/A
Equipment Delivered - N/A

Summary of Work:

Arrived on site along w/ the contractors. Met with Dave from Haynes about the days work activities.
- Safety Meeting.
- standerdized the troxler.
- Crew continued hauling soil material from Camp Wahoo.
- Placing soil at the top of the landfill final cap area.
- 1pm weekley meeting.
- Removed soil from the over constructed sed basin road.
- Placed the soil on the temp. ramp.
- Completed 4 passing compaction tests
- Haynes off site
- BC off site

Attachments:

- ☐ Contractor Report
- ☐ Field Notes
- ☐ Other:

Julie McGowan 7-17-12
Signature of CQA Monitor Date

Brown AND Caldwell

Daily Field Report

Site:	Ford Rd.	Date:	7-18-12
Project:	Phase 2 Remedial Action	Time In:	0700
Project No:	142889	Time Out:	1900
BC Personnel:	Julie McGowan	Weather:	High 88° Low 69°

Items Worked On:

- ☐ Mobilization/Demobilization
- ☐ Temporary Erosion and Sedimentation Controls
- ☐ Site Preparation
- ☐ Sedimentation Basin Construction
- ☐ Access Road Construction
- ☐ Seep Drain Construction
- ☐ Soil Buttress Construction
- ☒ Final Cap Construction
- ☐ River Bank Construction
- ☐ Vegetation
- ☐ Other -

Contractor/Subcontractors/Visitors/Alterations/Deliveries:

Contractor(s) - Haynes
Subcontractor(s) - N/A
Visitor(s) - N/A
Phone Call(s) - Rick Isaac
Alteration(s) - N/A
Material Delivered - Soil from Camp Wahoo
Equipment Delivered - N/A

Summary of Work:

Arrived on site along with Haynes Construction.
- Safety meeting
- Met with Dave Miller w/ Haynes about the days work activities.
- Standardized the troxler, completed 2 passing compactio tests on the final cap area using SS-10,
- Haynes continued hauling soil material from Camp Wahoo to the site.
- Continued constructing a temperary ramp for the dump trucks along the SW area.
- Hauled soil material and stockpiled along the tree line for the remainder of the day.
- Haynes off site
- BC off site

Attachments:

- ☒ Contractor Report
- ☐ Field Notes
- ☐ Other:

Julie McGowan 7-18-12
Signature of COA Monitor Date

Brown AND Caldwell

Daily Field Report

Site:	Ford Rd.	Date:	7-19-12
Project:	Phase 2 Remedial Action	Time In:	0700
Project No:	142889	Time Out:	1900
BC Personnel:	Julie McGowan	Weather:	High 85 Low 69

Items Worked On:

- ☐ Mobilization/Demobilization
- ☐ Temporary Erosion and Sedimentation Controls
- ☐ Site Preparation
- ☐ Sedimentation Basin Construction
- ☒ Access Road Construction
- ☐ Seep Drain Construction
- ☐ Soil Buttress Construction
- ☐ Final Cap Construction
- ☐ River Bank Construction
- ☐ Vegetation
- ☐ Other -

Contractor/Subcontractors/Visitors/Alterations/Deliveries:

Contractor(s) - Haynes Construction
Subcontractor(s) - N/A
Visitor(s) - N/A
Phone Call(s) - Bill Foster
Alteration(s) - N/A
Material Delivered - N/A
Equipment Delivered - N/A

Summary of Work:

- Arrived on site along with Haynes Construction.
- Safety meeting
- Met with Dave Miller about the days work activities
- Haynes continued to haul soil material from Camp Wahoo.
- Stockpiled material on top of the landfill along the tree line.
- Placed 8" loose lifts along the access road to the South West.
- Completed 2 passing compaction tests in that area. Using SS-8.
- Rain
- Off Site

Attachments:

- ☐ Contractor Report
- ☐ Field Notes
- ☐ Other:

Julie McGowan 7-19-12

Signature of CQA Monitor Date

Brown AND Caldwell

Daily Field Report

Site:	Ford Rd.	Date:	07/23/12 (Monday)
Project:	Phase 2 Remedial Action	Time In:	0700
Project No:	142889	Time Out:	1900
BC Personnel:	Bill Foster	Weather:	75°-97° P. Sunny

Items Worked On:

- ☐ Mobilization/Demobilization
- ☐ Temporary Erosion and Sedimentation Controls
- ☐ Site Preparation
- ☐ Sedimentation Basin Construction
- ☐ Access Road Construction
- ☐ Seep Drain Construction
- ☑ Soil Buttress Construction
- ☑ Final Cap Construction
- ☐ River Bank Construction
- ☐ Vegetation
- ☑ Other - Sample seep to north - Cit

Contractor/Subcontractors/Visitors/Alterations/Deliveries:

Contractor(s) - Haynes
Subcontractor(s) - N/A
Visitor(s) - WWTP - Erin, Kenny, Tony, Jason, Mary, Jimmy, Water Dept - Erik, City Inspector - B.
Phone Call(s) - Rick Isaac
Alteration(s) - N/A
Material Delivered - upper surface material, soil buttress material
Equipment Delivered - N/A

Summary of Work:

- on site
- Safety mtg.
- meet w/Dave to discuss the days workplan.
- Haynes is stockpiling upper surface material, from Camp Wahoo.
- City of Elyria Inspector is onsite. I show him where to sample the north seep. He had WWTP + Water Dept take samples.
- He will notify me w/results.
- Haynes stockpiles upper surface material til lunch.
- After lunch Haynes hauls + places soil buttress material.
- All compaction tests pass.
- Haynes finishes for the day + is offsite.
- I leave the site.

Attachments:

- ☐ Contractor Report
- ☐ Field Notes
- ☐ Other:

BN [signature] 07/23/12

Signature of CQA Monitor — Date

Brown AND Caldwell

Daily Field Report

Site:	Ford Rd.	Date:	07/24/12 (Tuesday)
Project:	Phase 2 Remedial Action	Time In:	0700
Project No:	142889	Time Out:	1900
BC Personnel:	Bill Foster	Weather:	65°-85° - P. Sunny

Items Worked On:

- ☐ Mobilization/Demobilization
- ☐ Temporary Erosion and Sedimentation Controls
- ☐ Site Preparation
- ☐ Sedimentation Basin Construction
- ☐ Access Road Construction
- ☐ Seep Drain Construction
- ☑ Soil Buttress Construction
- ☑ Final Cap Construction
- ☐ River Bank Construction
- ☐ Vegetation
- ☑ Other - Progress Mtg. - Post Construction survey of Parks Dept Borrow Source.

Contractor/Subcontractors/Visitors/Alterations/Deliveries:

Contractor(s) - Haynes
Subcontractor(s) - KS
Visitor(s) - Rick Isaac, Brian Holmes
Phone Call(s) - Rick Isaac
Alteration(s) - N/A
Material Delivered - upper surface material
Equipment Delivered - N/A

Summary of Work:

- on site.
- Safety mtg.
- Meet w/Dave to discuss the days workplan.
- KS is onsite to check equipment gps & verify that everything is still accurate. It's good.
- KS does the post construction topo of the Parks Dept. Borrow source. KS is offsite.
- Haynes is stockpiling upper surface material.
- Haynes hauls a few loads of soil buttress, then decides to concentrate on stockpiling upper surface material the rest of the day.
- Rick Isaac & Brian Holmes are onsite for the progress mtg.
- They are offsite.
- Haynes is offsite.
- I leave the site.

Attachments:

- ☐ Contractor Report
- ☐ Field Notes
- ☐ Other:

BN [illegible] 07/24/12

Signature of CQA Monitor — Date

Brown AND Caldwell

Daily Field Report

Site:	Ford Rd.	Date:	07/25/12 (wed)
Project:	Phase 2 Remedial Action	Time In:	0700
Project No:	142889	Time Out:	1900
BC Personnel:	Bill Foster	Weather:	73°-88° Sunny

Items Worked On:

- ☐ Mobilization/Demobilization
- ☐ Temporary Erosion and Sedimentation Controls
- ☐ Site Preparation
- ☐ Sedimentation Basin Construction
- ☐ Access Road Construction
- ☐ Seep Drain Construction
- ☐ Soil Buttress Construction
- ☑ Final Cap Construction
- ☐ River Bank Construction
- ☐ Vegetation
- ☑ Other - Mark trees to be removed, along Ford Rd.

Contractor/Subcontractors/Visitors/Alterations/Deliveries:

Contractor(s) - Haynes
Subcontractor(s) - N/A
Visitor(s) - N/A
Phone Call(s) - Rick Isaac
Alteration(s) - N/A
Material Delivered - upper surface material + topsoil. Both from Cap Values
Equipment Delivered - N/A

Summary of Work:

- on site -
- safety mtg.
- meet w/Dave to discuss the days workplan.
- Haynes is hauling + stockpiling the last few truck loads of upper surface material, from Cap Values
- Haynes begins hauling more topsoil, from Cap Values, + stockpiling.
- I mark which trees, along Ford Rd, will need removed.
- Haynes finished + is offsite.
- I leave the site.

Attachments:

- ☐ Contractor Report
- ☐ Field Notes
- ☐ Other:

BW [signature] 07/25/12
Signature of CQA Monitor Date

Brown AND Caldwell

Daily Field Report

Site:	Ford Rd.	Date:	07/26/12 (Thursday)
Project:	Phase 2 Remedial Action	Time In:	0700
Project No:	142889	Time Out:	1900
BC Personnel:	Bill Foster	Weather:	73°-93° P. Cloudy

Items Worked On:

- ☐ Mobilization/Demobilization
- ☐ Temporary Erosion and Sedimentation Controls
- ☐ Site Preparation
- ☐ Sedimentation Basin Construction
- ☐ Access Road Construction
- ☐ Seep Drain Construction
- ☑ Soil Buttress Construction
- ☐ Final Cap Construction
- ☐ River Bank Construction
- ☐ Vegetation
- ☑ Other - Place topsoil on outer sed Pond embankment slope.

Contractor/Subcontractors/Visitors/Alterations/Deliveries:

Contractor(s) - Haynes
Subcontractor(s) - N/A
Visitor(s) - Joe Montello
Phone Call(s) - Rick Isaac
Alteration(s) - N/A
Material Delivered - Steep Slope Fill - Grube Fruit Farm (GFF)
Equipment Delivered - N/A

Summary of Work:

- on site
- safety mtg.
- meet w/Dave to discuss the days workplan.
- Haynes is hauling + placing soil buttress material, from Grube Fruit Farm (GFF).
- Haynes is also placing topsoil on the outside slope of the sed pond embankment.
- Joe Montello is onsite. We walk the site + discuss the project.
- Joe is offsite.
- Haynes continues placing soil buttress + topsoil the remainder of the day. All 3 tests I take f.l. Its to wet
- Haynes is offsite. Haynes will rework the material tomorrow.
- I leave the site.

Attachments:

- ☐ Contractor Report
- ☐ Field Notes
- ☐ Other:

Bill Foster — Signature of CQA Monitor

07/26/12 — Date

Brown AND Caldwell

Daily Field Report

Site:	Ford Rd.	Date:	07/27/12 (Friday)
Project:	Phase 2 Remedial Action	Time In:	0700
Project No:	142889	Time Out:	1900
BC Personnel:	Bill Foster	Weather:	68°-86° P. Sunny

Items Worked On:

- ☐ Mobilization/Demobilization
- ☐ Temporary Erosion and Sedimentation Controls
- ☐ Site Preparation
- ☐ Sedimentation Basin Construction
- ☐ Access Road Construction
- ☐ Seep Drain Construction
- ☑ Soil Buttress Construction - stockpile
- ☐ Final Cap Construction
- ☐ River Bank Construction
- ☐ Vegetation
- ☑ Other - Dig Sed Pond Outlet swale

Contractor/Subcontractors/Visitors/Alterations/Deliveries:

Contractor(s) - Haynes
Subcontractor(s) - N/A
Visitor(s) - N/A
Phone Call(s) - Rick Isaac
Alteration(s) - N/A
Material Delivered - Steep slope Fill - stockpile + let dry out
Equipment Delivered - N/A

Summary of Work:

- on site
- Safety mtg.
- meet w/Dave to discuss the days workplan.
- Haynes is reworking the lift of soil buttress that failed yesterday. Material is still very wet, so I am going to have them continue until lunch + then, maybe test it.
- Haynes is hauling soil buttress from GFF, + stockpiling it up top in order to get it to dry out.
- No buttress material will be placed today.
- Dave + I go to the GFF borrow area to look @ the soil.
- Looks like the upper 4 +/- feet is really wet, but everything below 4' appears to be "representative of the proctor".
- Haynes is ~~[illegible]~~ plowing the borrow area, to dry the material out.
- Haynes digs the outlet channel for the principle spillway of the cell pa
- Haynes is offsite. Soil still to wet.
- I leave the site.

Attachments:

- ☐ Contractor Report
- ☐ Field Notes
- ☐ Other:

Signature of CQA Monitor: [signature] Date: 07/27/12

Brown AND Caldwell

Daily Field Report

Site:	Ford Rd.	Date:	07/30/12 (Monday)
Project:	Phase 2 Remedial Action	Time In:	0700
Project No:	142889	Time Out:	1900
BC Personnel:	Bill Foster / Julie McGowan	Weather:	72°-92° Sunny

Items Worked On:

- ☐ Mobilization/Demobilization
- ☐ Temporary Erosion and Sedimentation Controls
- ☐ Site Preparation
- ☐ Sedimentation Basin Construction
- ☐ Access Road Construction
- ☐ Seep Drain Construction
- ☑ Soil Buttress Construction
- ☐ Final Cap Construction
- ☐ River Bank Construction
- ☐ Vegetation
- ☑ Other - Topsoil Samples from GFF.

Contractor/Subcontractors/Visitors/Alterations/Deliveries:

Contractor(s) - Haynes
Subcontractor(s) - N/A
Visitor(s) - N/A
Phone Call(s) - Rick Isaac
Alteration(s) - N/A
Material Delivered - N/A
Equipment Delivered - N/A

Summary of Work:

- on site @ borrow area (broke Fruit Farm) with Julie McGow
- Safety mtg.
- Meet w/Dave to discuss the days workplan.
- Julie and I take two topsoil samples, GFF-TS-1 + GFF-TS-2.
- Julie leaves + takes them to the lab (S+ME).
- offsite @ borrow area.
- onsite @ Ford Rd.
- Dave is working the last lift of soil buttress. (The lift that failed)
- I test it 4 times + all tests pass
- Haynes is offsite.
- I leave the site.

Attachments:

- ☐ Contractor Report
- ☐ Field Notes
- ☐ Other:

BiN [illegible] — Signature of CQA Monitor

07/30/12 — Date

Brown AND Caldwell

Daily Field Report

Site:	Ford Rd.	Date:	07/31/12 (Tuesday)
Project:	Phase 2 Remedial Action	Time In:	0700
Project No:	142889	Time Out:	1900
BC Personnel:	Bill Foster	Weather:	69°-88° P. Cloudy

Items Worked On:

- ☐ Mobilization/Demobilization
- ☑ Temporary Erosion and Sedimentation Controls — Fre Silt Fence
- ☐ Site Preparation
- ☐ Sedimentation Basin Construction
- ☐ Access Road Construction
- ☐ Seep Drain Construction
- ☑ Soil Buttress Construction
- ☐ Final Cap Construction
- ☐ River Bank Construction
- ☐ Vegetation
- ☑ Other - Progress Mtg.

Contractor/Subcontractors/Visitors/Alterations/Deliveries:

Contractor(s) - Haynes
Subcontractor(s) - N/A
Visitor(s) - Mark Haynes, Brian Holmes
Phone Call(s) - Rick Isaac
Alteration(s) - N/A
Material Delivered - Soil buttress material
Equipment Delivered - N/A

Summary of Work:

- on site.
- Safety mtg.
- meet w/Dave to discuss the days workplan.
- Haynes is hauling soil buttress material from the GEF.
- Haynes is pumping the water out of the pond in order to get equipment in the bottom to do some work, maybe @ the end of the week.
- Mark Haynes is onsite. He stays for about 30 mins + is offsite.
- We have the weekly progress mtg. Dave + I are the only attendees, others call in.
- Brian Holmes stops by the site, after the mtg. He just wanted to know what, if anything, he missed. We talk for 10 mins + he is offsite.
- All compaction tests that I take today pass.
- Haynes is offsite.
- I leave the site.

Attachments:

- ☐ Contractor Report
- ☐ Field Notes
- ☐ Other:

Bill Foster — Signature of CQA Monitor

07/31/12 — Date

Brown AND Caldwell

Daily Field Report

Site: Ford Rd.	**Date:** 08/01/12 (Wed)
Project: Phase 2 Remedial Action	**Time In:** 0700
Project No: 142889	**Time Out:** 1900
BC Personnel: Bill Foster	**Weather:** 65°-82° Sunny

Items Worked On:

- ☐ Mobilization/Demobilization
- ☐ Temporary Erosion and Sedimentation Controls
- ☐ Site Preparation
- ☐ Sedimentation Basin Construction
- ☐ Access Road Construction
- ☐ Seep Drain Construction
- ☑ Soil Buttress Construction
- ☐ Final Cap Construction
- ☐ River Bank Construction
- ☐ Vegetation
- ☐ Other -

Contractor/Subcontractors/Visitors/Alterations/Deliveries:

Contractor(s) - Haynes
Subcontractor(s) - N/A
Visitor(s) - N/A
Phone Call(s) - Rick Isaac
Alteration(s) - N/A
Material Delivered - Soil Buttress
Equipment Delivered - N/A

Summary of Work:

- on site.
- Safety Mtg.
- Meet w/Dave to discuss the days workplan
- Haynes is hauling soil buttress material from the GEE
- Trucks enter on the south access rd, dump + exit to the North access rd.
- Haynes continues w/soil buttress construction the remainder of the day.
- All compaction tests pass.
- Haynes is offsite.
- I leave the site.

Attachments:

- ☐ Contractor Report
- ☐ Field Notes
- ☐ Other:

Bill Foster — Signature of CQA Monitor

08/01/12 — Date

Brown AND Caldwell

Daily Field Report

Site:	Ford Rd.	Date:	08/02/12 (Thursday)
Project:	Phase 2 Remedial Action	Time In:	0700
Project No:	142889	Time Out:	1800
BC Personnel:	Bill Foster / Nate Givens	Weather:	70°-90° sunny

Items Worked On:

- ☐ Mobilization/Demobilization
- ☐ Temporary Erosion and Sedimentation Controls
- ☐ Site Preparation
- ☐ Sedimentation Basin Construction
- ☐ Access Road Construction
- ☐ Seep Drain Construction
- ☑ Soil Buttress Construction
- ☐ Final Cap Construction
- ☐ River Bank Construction
- ☐ Vegetation
- ☐ Other -

Contractor/Subcontractors/Visitors/Alterations/Deliveries:

Contractor(s) - Haynes
Subcontractor(s) - N/A
Visitor(s) - N/A
Phone Call(s) - Rick Isaac
Alteration(s) - N/A
Material Delivered - Soil Buttress
Equipment Delivered - N/A

Summary of Work:

- on site
- Safety mtg.
- meet w/Dave to discuss the days workplan.
- Haynes is hauling soil buttress material from the GFF.
- Trucks use the south access rd, dump + exit by means of the north access rd.
- The soil is placed w/a dozer in 8" loose lift (6" compacted) + compacted w/a min of 6 passes.
- Nate Givens is onsite. He will cover for me tomorrow.
- Haynes continues this routine the rest of the day.
- All tests I take pass.
- Haynes is offsite
- Bill + Nate are offsite.

Attachments:

- ☐ Contractor Report
- ☐ Field Notes
- ☐ Other:

Signature of CQA Monitor: [signature] Date: 08/02/12

Brown AND Caldwell

Daily Field Report

Site:	Ford Rd.	Date:	08/03/12
Project:	Phase 2 Remedial Action	Time In:	0700
Project No:	142899	Time Out:	1900
BC Personnel:	N. GREENE	Weather:	70° 90°, SUNNY

Items Worked On:

- ☐ Mobilization/Demobilization
- ☐ Temporary Erosion and Sedimentation Controls
- ☐ Site Preparation
- ☐ Sedimentation Basin Construction
- ☐ Access Road Construction
- ☐ Seep Drain Construction
- ☒ Soil Buttress Construction
- ☐ Final Cap Construction
- ☐ River Bank Construction
- ☐ Vegetation
- ☐ Other -

Contractor/Subcontractors/Visitors/Alterations/Deliveries:

Contractor(s) - HAYNES
Subcontractor(s) - N/A
Visitor(s) - N/A
Phone Call(s) - BILL GESTER
Alteration(s) - N/A
Material Delivered - BUTTRESS SOIL
Equipment Delivered - N/A

Summary of Work:

ONSITE
- SAFETY MEETING
- MEET WITH JACK TO DISCUSS DAY'S WORK PLAN
- HAYNES IS HAULING SOIL BUTTRESS MATERIAL FROM GFF
- TRUCKS ENTER FILL AREA VIA SOUTH ACCESS ROAD, DUMP, AND EXIT VIA NORTH ACCESS ROAD
- SOIL IS SPREAD IN 8"-10" LOOSE (6" COMPACTED) LIFT AND COMPACTED WITH A MINIMUM OF 6 PASSES WITH THE COMPACTOR.
- HAYNES CONTINUED SOIL PLACEMENT/COMPACTION FOR THE REST OF THE DAY
- CURRENT LIFT WAS PARTIALLY COMPLETED APPROX. 400 LF LEFT TO FILL TO COMPLETE THE LIFT
- ALL COMPACTION TEST PERFORMED TODAY PASSED
- HAYNES OFFSITE
- OFFSITE

Attachments:

- ☐ Contractor Report
- ☐ Field Notes
- ☐ Other:

Signature of CQA Monitor: [signature] Date: 08/03/12

Brown AND Caldwell

Daily Field Report

Site:	Ford Rd.	Date:	08/06/12 (Monday)
Project:	Phase 2 Remedial Action	Time In:	0700
Project No:	142889	Time Out:	1900
BC Personnel:	Bill Foster	Weather:	70°-90° Sunny

Items Worked On:

- ☐ Mobilization/Demobilization
- ☐ Temporary Erosion and Sedimentation Controls
- ☐ Site Preparation
- ☐ Sedimentation Basin Construction
- ☐ Access Road Construction
- ☐ Seep Drain Construction
- ☑ Soil Buttress Construction
- ☐ Final Cap Construction
- ☐ River Bank Construction
- ☐ Vegetation
- ☐ Other -

Contractor/Subcontractors/Visitors/Alterations/Deliveries:

Contractor(s) - Hayres — City is working on watermain
Subcontractor(s) - N/A
Visitor(s) - N/A
Phone Call(s) - Rich Isaac
Alteration(s) - N/A
Material Delivered - Soil Buttress
Equipment Delivered - N/A

Summary of Work:

- on site
- safety mtg
- meet w/Dave to discuss the days workplan
- Hayres is hauling & placing soil buttress material
- All tests I take pass.
- Hayres finished for the day & is off site.
- I leave the site.

Attachments:

- ☐ Contractor Report
- ☐ Field Notes
- ☐ Other:

BNZT — Signature of CQA Monitor

08/06/12 — Date

Brown AND Caldwell

Daily Field Report

Site:	Ford Rd.	Date:	08/07/12 (Tuesday)
Project:	Phase 2 Remedial Action	Time In:	0700
Project No:	142889	Time Out:	1900
BC Personnel:	Bill Foster	Weather:	65°-85° sunny

Items Worked On:

- ☐ Mobilization/Demobilization
- ☐ Temporary Erosion and Sedimentation Controls
- ☐ Site Preparation
- ☐ Sedimentation Basin Construction
- ☐ Access Road Construction
- ☐ Seep Drain Construction
- ☑ Soil Buttress Construction
- ☐ Final Cap Construction
- ☐ River Bank Construction
- ☐ Vegetation
- ☑ Other - Progress mtg.

Contractor/Subcontractors/Visitors/Alterations/Deliveries:

Contractor(s) - Hayes — city is working on waterline.
Subcontractor(s) - N/A
Visitor(s) - Rich Isaac, Vanessa Steigerwald
Phone Call(s) - ~~[illegible]~~ Rich Isaac
Alteration(s) - N/A
Material Delivered - Soil buttress
Equipment Delivered - N/A

Summary of Work:

- on site
- safety mtg
- meet w/Dave to discuss the days workplan.
- Hayes is hauling & placing soil buttress material.
- Rich Isaac & Vanessa Steigerwald are onsite for the progress mtg.
- we have the progress mtg.
- Rich & Vanessa walk the site.
- Rich & Vanessa are offsite.
- Hayes continues w/soil buttress.
- Hayes is offsite.
- I leave the site.

Attachments:

- ☐ Contractor Report
- ☐ Field Notes
- ☐ Other:

BN [illegible] — Signature of CQA Monitor

08/07/12 — Date

Brown AND Caldwell

Daily Field Report

Site: Ford Rd.

Project: Phase 2 Remedial Action

Project No: 142839

BC Personnel: Bill Foster

Date: 08/08/12 (Wed)

Time In: 0700

Time Out: 1900

Weather: 72°-90° Sunny

Items Worked On:

- ☐ Mobilization/Demobilization
- ☐ Temporary Erosion and Sedimentation Controls
- ☐ Site Preparation
- ☐ Sedimentation Basin Construction
- ☐ Access Road Construction
- ☐ Seep Drain Construction
- ☑ Soil Buttress Construction
- ☐ Final Cap Construction
- ☐ River Bank Construction
- ☐ Vegetation
- ☐ Other -

Contractor/Subcontractors/Visitors/Alterations/Deliveries:

Contractor(s) - Hynes

Subcontractor(s) - N/A

Visitor(s) - N/A

Phone Call(s) - Rich Isaac

Alteration(s) - N/A

Material Delivered - Soil Buttress

Equipment Delivered - N/A

Summary of Work:

- on site
- Safety mtg.
- meet w/Dave to discuss the days workplan.
- Hynes is hauling/placing soil buttress material
- All tests I take today pass.
- Hynes is offsite.
- I leave the site.

Attachments:

- ☐ Contractor Report
- ☐ Field Notes
- ☐ Other:

BW [illegible] — Signature of CGA Monitor

08/08/12 — Date

Brown AND Caldwell

Daily Field Report

Site: Ford Rd.

Project: Phase 2 Remedial Action

Project No: 142889

BC Personnel: Bill Foster

Date: 08/13/12 (Monday)

Time In: 0700

Time Out: 1900

Weather: 66°-87° Sunny

Items Worked On:

- ☐ Mobilization/Demobilization
- ☐ Temporary Erosion and Sedimentation Controls
- ☐ Site Preparation
- ☐ Sedimentation Basin Construction
- ☐ Access Road Construction
- ☐ Seep Drain Construction
- ☑ Soil Buttress Construction
- ☐ Final Cap Construction
- ☐ River Bank Construction
- ☐ Vegetation
- ☐ Other -

Contractor/Subcontractors/Visitors/Alterations/Deliveries:

Contractor(s) - Haynes

Subcontractor(s) - N/A

Visitor(s) - N/A

Phone Call(s) - Rick Isaac

Alteration(s) - N/A

Material Delivered - Soil Buttress

Equipment Delivered - N/A

Summary of Work:

- On site.
- Safety mtg.
- Meet w/Dave to discuss the days workplan.
- Haynes is hauling soil buttress from the GFF.
- Trucks use the south access rd, to dump & exit by the north access rd.
- Soil is placed w/a dozer & compacted. 9" loose lifts, 6" compacted, min 6 one-way passes of compactor.
- All tests I take pass.
- Haynes is offsite.
- I leave the site.

Attachments:

- ☐ Contractor Report
- ☐ Field Notes
- ☐ Other.

Signature of CQA Monitor: [signature]

Date: 08/13/12

Brown AND Caldwell

Daily Field Report

Site:	Ford Rd.	Date:	2/15/12
Project:	Phase 2 Remedial Action	Time In:	0700
Project No:	142889	Time Out:	1900
BC Personnel:	J. McGowan	Weather:	60°-50°

Items Worked On:

- ☐ Mobilization/Demobilization
- ☐ Temporary Erosion and Sedimentation Controls
- ☐ Site Preparation
- ☐ Sedimentation Basin Construction
- ☐ Access Road Construction
- ☐ Seep Drain Construction
- ☒ Soil Buttress Construction
- ☐ Final Cap Construction
- ☐ River Bank Construction
- ☐ Vegetation
- ☐ Other -

Contractor/Subcontractors/Visitors/Alterations/Deliveries:

Contractor(s) - Haynes
Subcontractor(s) - N/A
Visitor(s) - N/A
Phone Call(s) - Bill Foster
Alteration(s) - N/A
Material Delivered - Soil
Equipment Delivered - N/A

Summary of Work:

Arrived on site along w/ the contractors
- Safety Meeting.
Met w/ Dave Miller about the days work activities
- Standardized the troxler.
- Haynes hauled soil to the site to construct the soil buttress. Due to the rain earlier in the week. Soil material was to wet to compact and test.
- off site

Attachments:

- ☐ Contractor Report
- ☐ Field Notes
- ☐ Other.

Julie McGowan
Signature of CQA Monitor Date

Brown AND Caldwell

Daily Field Report

Site:	Ford Rd.	Date:	8/16/12
Project:	Phase 2 Remedial Action	Time In:	0700
Project No:	142889	Time Out:	1700
BC Personnel:	Julie McGowan	Weather:	High 74° Low 55°

Items Worked On:

- ☐ Mobilization/Demobilization
- ☐ Temporary Erosion and Sedimentation Controls
- ☐ Site Preparation
- ☐ Sedimentation Basin Construction
- ☐ Access Road Construction
- ☐ Swep Drain Construction
- ☒ Soil Buttress Construction
- ☐ Final Cap Construction
- ☐ River Bank Construction
- ☐ Vegetation
- ☐ Other -

Contractor/Subcontractors/Visitors/Alterations/Deliveries:

Contractor(s) - Haynes Construction
Subcontractor(s) - N/A
Visitor(s) - N/A
Phone Call(s) - Rick Isaac
Alteration(s) - N/A
Material Delivered - N/A
Equipment Delivered - N/A

Summary of Work:

Arrived on site along with Haynes Construction
- Safety meeting.
- Met w/ Dave Miller about the days work activities
- Continued to haul soil to the Soil Buttress area
- Completed 3 passing tests for lift #24.
- Completed 2 passing tests for lift #25 on the South and Middle ends.
- Haynes utilized a water truck for dust control.
- Swept Streets.
- Left Site

Attachments:

- ☐ Contractor Report
- ☐ Field Notes
- ☐ Other:

Julie McGowan 8/16/12
Signature of CQA Monitor Date

Brown AND Caldwell

Daily Field Report

Site:	Ford Rd.	Date:	8/17/12
Project:	Phase 2 Remedial Action	Time In:	0700
Project No:	142889	Time Out:	1900
BC Personnel:	J. McGowan	Weather:	High 80 low 64

Items Worked On:

- ☐ Mobilization/Demobilization
- ☐ Temporary Erosion and Sedimentation Controls
- ☐ Site Preparation
- ☐ Sedimentation Basin Construction
- ☐ Access Road Construction
- ☐ Seep Drain Construction
- ☒ Soil Buttress Construction
- ☐ Final Cap Construction
- ☐ River Bank Construction
- ☐ Vegetation
- ☐ Other -

Contractor/Subcontractors/Visitors/Alterations/Deliveries:

Contractor(s) - Haynes Construction
Subcontractor(s) - N/A
Visitor(s) - N/A
Phone Call(s) - Rick Ixau
Alteration(s) - N/A
Material Delivered - N/A
Equipment Delivered - N/A

Summary of Work:

- Arrived on site along with Haynes Construction.
- Met with the Contractors about the days work activities.
- Safety meeting about Heavy Equipment.
- Standardized the troxler.
- Completed three passing test on lift #23.
- Haynes continued Hauling soil for the remainder of the day.
- Haynes placed lift #24. Material was to damp
- Haynes mixed with some dryer material and let set over night.
- Off site

Attachments:

- ☐ Contractor Report
- ☐ Field Notes
- ☐ Other:

John McGowan 8/16/12
Signature of CQA Monitor Date

Brown AND Caldwell

Daily Field Report

Site:	Ford Rd.	Date:	08/20/12 (Monday)
Project:	Phase 2 Remedial Action	Time In:	0700
Project No:	142889	Time Out:	1900
BC Personnel:	Foster	Weather:	65°-85° Sunny

Items Worked On:

- ☐ Mobilization/Demobilization
- ☐ Temporary Erosion and Sedimentation Controls
- ☐ Site Preparation
- ☐ Sedimentation Basin Construction
- ☐ Access Road Construction
- ☐ Seep Drain Construction
- ☑ Soil Buttress Construction
- ☐ Final Cap Construction
- ☐ River Bank Construction
- ☐ Vegetation
- ☐ Other -

Contractor/Subcontractors/Visitors/Alterations/Deliveries:

Contractor(s) - Haynes
Subcontractor(s) - N/A
Visitor(s) - N/A
Phone Call(s) - Rick Isaac
Alteration(s) - N/A
Material Delivered - Soil buttress
Equipment Delivered - N/A

Summary of Work:

- on site.
- Safety mtg.
- Meet w/Dave to discuss the days workplan
- Haynes is hauling soil buttress from the GFF.
- Haynes is dumping down below w/dump trucks & dumping up top (when there is a wait to dump down below). Material dumped below is placed w/a dozer. Material dumped up top is spread out w/a dozer & scraped up w/a pan & taken down below & dumped (when there is a break from trucks onsite.
- Material is placed w/a dozer & compacted.
- All tests pass
- Haynes is offsite.
- I leave the site.

Attachments:

- ☐ Contractor Report
- ☐ Field Notes
- ☐ Other:

Signature of CQA Monitor: [signature] Date: 08/20/12

Brown AND Caldwell

Daily Field Report

Site:	Ford Rd.	**Date:**	08/21/12 (Tuesday)
Project:	Phase 2 Remedial Action	**Time In:**	0700
Project No:	142889	**Time Out:**	1900
BC Personnel:	Foster	**Weather:**	67°-85° Sunny

Items Worked On:

- ☐ Mobilization/Demobilization
- ☐ Temporary Erosion and Sedimentation Controls
- ☐ Site Preparation
- ☐ Sedimentation Basin Construction
- ☐ Access Road Construction
- ☐ Seep Drain Construction
- ☐ Soil Buttress Construction
- ☐ Final Cap Construction
- ☐ River Bank Construction
- ☐ Vegetation
- ☑ Other - Weekly Progress Mtg

Contractor/Subcontractors/Visitors/Alterations/Deliveries:

Contractor(s) - Haynes
Subcontractor(s) - N/A
Visitor(s) - Brian Holmes, Clarissa Gereby
Phone Call(s) - Rich Isaac.
Alteration(s) - N/A
Material Delivered - Soil Buttress
Equipment Delivered - N/A

Summary of Work:

- On site.
- Safety mtg.
- Meet w/Dave to discuss the days workplan.
- Haynes is hauling soil buttress from the GFF.
- Haynes follows the same procedure as they did yesterday.
- No tests were taken today. Haynes did not get a chance to compact the soil. Tests will be taken tomorrow morning after Haynes compacts the soil.
- We have the weekly progress mtg. Clarissa & I walk the site & discuss the project. Clarissa & Brian Holmes are offsite.
- Haynes finishes for the day & is offsite.
- I leave the site.

Attachments:

- ☐ Contractor Report
- ☐ Field Notes
- ☐ Other:

[signature] 08/21/12

Signature of CQA Monitor — Date

Brown AND Caldwell

Daily Field Report

Site:	Ford Rd.	Date:	08/22/12 (Wed)
Project:	Phase 2 Remedial Action	Time In:	0700
Project No:	142889	Time Out:	1900
BC Personnel:	Bill Foster / Nate Givens	Weather:	65°-84° Sunny

Items Worked On:

- ☐ Mobilization/Demobilization
- ☐ Temporary Erosion and Sedimentation Controls
- ☐ Site Preparation
- ☐ Sedimentation Basin Construction
- ☐ Access Road Construction
- ☐ Seep Drain Construction
- ☑ Soil Buttress Construction
- ☐ Final Cap Construction
- ☐ River Bank Construction
- ☐ Vegetation
- ☐ Other -

Contractor/Subcontractors/Visitors/Alterations/Deliveries:

Contractor(s) - Haynes
Subcontractor(s) - N/A
Visitor(s) - N/A
Phone Call(s) - Rick Isaac
Alteration(s) - N/A
Material Delivered - Soil Buttress
Equipment Delivered - N/A

Summary of Work:

- on site.
- Safety mtg.
- meet w/Dave to discuss the days workplan.
- Haynes is hauling soil buttress material from the GFF.
- Trucks are using the south access rd to dump, and exiting w/the north access rd. Truck drivers are dumping up top, if & only if, there is a wait to dump down below.
- soil that is dumped up top is spread out w/a dozer, loaded into a pan, & taken down below when their isn't a backlog of trucks.
- Soil, down below, is placed in ~~[illegible]~~ 9" (loose) lifts w/a dozer, compacted to a 6" lift w/a min of 6 (one-way) passes.
- Nate Givens is onsite.
- All tests I take today pass.
- Haynes is offsite.
- Nate & I leave the site.

Attachments:

- ☐ Contractor Report
- ☐ Field Notes
- ☐ Other:

Bill Foster 08/22/12

Signature of CQA Monitor — Date

Brown AND Caldwell

Daily Field Report

Site:	Ford Rd.	Date:	08/23/12 (THU)
Project:	Phase 2 Remedial Action	Time In:	0700
Project No:	142889	Time Out:	1900
BC Personnel:	N. GIVENS	Weather:	SUNNY 61° - 82° F

Items Worked On:

- ☐ Mobilization/Demobilization
- ☐ Temporary Erosion and Sedimentation Controls
- ☐ Site Preparation
- ☐ Sedimentation Basin Construction
- ☐ Access Road Construction
- ☐ Seep Drain Construction
- ☒ Soil Buttress Construction
- ☐ Final Cap Construction
- ☐ River Bank Construction
- ☐ Vegetation
- ☐ Other

Contractor/Subcontractors/Visitors/Alterations/Deliveries:

Contractor(s) - HAYNES

Subcontractor(s) - N/A

Visitor(s) - TOM KEYS (ODOT)

Phone Call(s) - RICK ISAAC, BILL FOSTER

Alteration(s) - N/A

Material Delivered - SOIL BUTRESS MATERIAL

Equipment Delivered - N/A

Summary of Work:

- ONSITE.
- SAFETY MEETING.
- MET W/ DAVE TO DISCUSS DAY'S WORK PLAN.
- HAYNES CONTINUED SOIL BUTRESS PLACEMENT.
- COMPACTION TEST #193 FAILED DUE TO HIGH MOISTURE. HAYNES SCARIFIED SURFACE IN VICINITY OF 193 ~~[illegible]~~ AND RE-COMPACTED MATERIAL. TEST #194 (RE-TEST FOR #193) PASSED.
- ALL OTHER COMPACTION TESTS FOR THE DAY PASSED.
- TOM KEYS VISITED THE SITE TO DISCUSS COMPLAINTS AT GROBE FRUIT FARM BORROW VEGA REGARDING DUST AND ROCKS FALLING OFF OF TRUCKS ON PUBLIC ROADWAYS. ~~[illegible]~~ I SPOKE TO DAVE ABOUT THIS, AND HE SAID THE PROBLEMS WILL BE ADDRESSED.
- HAYNES LEFT THE SITE.
- I LEFT THE SITE.

Attachments:

- ☐ Contractor Report
- ☐ Field Notes
- ☐ Other:

Signature of CQA Monitor: [signature] Date: 08/23/12

Brown AND Caldwell

Daily Field Report

Site:	Ford Rd	Date:	08/24/12 (Friday)
Project:	Phase 2 Remedial Action	Time In:	0700
Project No:	142989	Time Out:	1900
BC Personnel:	Bill Foster	Weather:	65°-90° sunny

Items Worked On:

- ☐ Mobilization/Demobilization
- ☐ Temporary Erosion and Sedimentation Control
- ☐ Site Preparation
- ☑ Sedimentation Basin Construction - culvert outlet pipe - Riser Pipe
- ☐ Access Road Construction
- ☐ Seep Drain Construction
- ☑ Soil Buttress Construction
- ☐ Final Cap Construction
- ☐ Silver Basin Construction
- ☐ Vegetation
- ☐ Other -

Contractor/Subcontractors/Visitors/Alterations/Deliveries:

Contractor(s) - Haynes
Subcontractor(s) - N/A
Visitor(s) - N/A
Phone Call(s) - Rick Isaac
Alteration(s) - N/A
Material Delivered - N/A
Equipment Delivered - N/A

Summary of Work:

- on site.
- safety mtg.
- meet w/Dave to discuss the days workplan.
- Haynes is hauling soil buttress material from the BFF.
- Haynes is dumping ~~[illegible]~~ down below w/dump trucks & dumping up top w/dump trucks. The material dumped up top is spread out w/a dozer, then scraped up w/a pan & then down below & dumped.
- Compaction tests pads.
- Haynes installs the Principle spillway. Concrete is NOT poured yet. It will be a later date.
- Haynes is offsite.
- I leave the site.

Attachments:

- ☐ Contractor Report
- ☐ Field Notes
- ☐ Other:

BW Ft 08/24/12
Signature of GQA Monitor Date

Brown AND Caldwell

Daily Field Report

Site:	Fort Ord	Date:	08/28/12 (Tuesday)
Project:	Phase 2 Remedial Action	Time In:	0700
Project No:	[illegible]	Time Out:	1900
BC Personnel:	Bill Foster	Weather:	70°-80° Sunny

Items Worked On:

- ☐ Mobilization Demobilization
- ☐ Temporary Erosion and Sedimentation Controls
- ☐ Site Preparation
- ☐ Sedimentation Basin Construction
- ☐ Access Road Construction
- ☐ Swap Drain Construction
- ☑ Soil Buttress Construction
- ☐ Final Cap Construction
- ☐ River Bank Construction
- ☐ Vegetation
- ☑ Other - Progress Mtg.

Contractor/Subcontractors/Visitors/Alterations/Deliveries:

Contractor(s) - Haynes
Subcontractor(s) - [redacted] KS & Assoc.
Visitor(s) - [redacted] Rich Isaac, Joe Montello
Phone Call(s) - Rick Isaac
Alteration(s) - N/A
Material Delivered - Soil Buttress
Equipment Delivered - N/A

Summary of Work:

- on site
- safety mtg.
- meet w/Dave to discuss the days workplan
- Haynes is hauling soil buttress from the GFF
- All trucks dump up top & pans scrape the material & take it down below. It is too wet for trucks to dump down below
- Material is compacted after the pans deploy the soil
- KS & Assoc is onsite to verify the calibration of the GPS on Haynes equipment. Checks out ok.
- Rich Isaac & Joe Montello are onsite for the weekly progress mtg.
- We walk the site after the mtg. Joe is offsite.
- All compaction tests pass.
- Haynes is offsite.
- Rich & I leave the site.

Attachments:

- ☐ Contractor Report
- ☐ Field Notes
- ☐ Other

Bill Foster — Signature of CQA Monitor

08/28/12 — Date

Brown AND Caldwell

Daily Field Report

Site: Ford Rd.

Project: Phase 2 Remediation

Project No: [illegible]

BC Personnel: B.N. Foster

Date: 08/29/12 (Wed)

Time In: 0700

Time Out: 1900

Weather: 60°-80° Sunny

Items Worked On:

- [ ] Mobilization/Demobilization
- [ ] Temporary Erosion and Sedimentation Controls
- [ ] Site Preparation
- [x] Stormwater Basin Construction - Pour concrete base of principle spillway.
- [ ] Access Road Construction
- [ ] Seep Drain Construction
- [x] Soil Buttress Construction
- [ ] Final Cap/Cover Installation
- [ ] River Bank Construction
- [ ] Vegetation
- [ ] Other -

Contractor/Subcontractors/Visitors/Alterations/Deliveries:

Contractor(s) - Haynes

Subcontractor(s) - N/A

Visitor(s) - N/A

Phone Call(s) - Nick Esposito

Alteration(s) - N/A

Material Delivered - Soil Buttress

Equipment Delivered - N/A

Summary of Work:

- On site
- Safety mtg.
- meet w/Dave to discuss the days workplan.
- Haynes is hauling soil buttress material from the GFF.
- Trucks are dumping up top. Dozer is spreading soil out. Pans are loading soil & placing the soil down below.
- Haynes pours the concrete base of the principle spillway.
- Haynes places the buttress material, per specs.
- All tests I take pass
- Haynes is offsite.
- I leave the site @ 1900.

Attachments:

- [ ] Contractor Report
- [ ] Field Notes
- [ ] Other:

B.N. Foster — Signature of CQA Monitor

08/29/12 — Date

Brown AND Caldwell

Daily Field Report

Site:	Ford NJ	Date:	08/30/12 (Thursday)
Project:	Phase 2 Remedial Action	Time In:	0700
Project No:	[illegible]	Time Out:	1900
BC Personnel:	Bill Foster / Julie McGowan	Weather:	65°-85° Sunny

Items Worked On:

- [ ] Mobilization Demobilization
- [ ] Temporary Erosion and Sedimentation Controls
- [ ] Site Preparation
- [ ] Sedimentation Basin Construction
- [ ] Access Road Construction
- [ ] Swale Drain Construction
- [x] Soil Buttress Construction
- [ ] Final Cap Construction
- [ ] River Bank Construction
- [ ] Vegetation
- [ ] Other -

Contractor/Subcontractors/Visitors/Alterations/Deliveries:

Contractor(s) - Haynes
Subcontractor(s) - N/A
Visitor(s) - Bill Fredericks
Phone Call(s) - Rick Isaac
Alteration(s) - N/A
Material Delivered - soil buttress
Equipment Delivered - N/A

Summary of Work:

- on site. Julie McGowan is onsite.
- safety mtg.
- meet w/Dave to discuss the days workplan.
- Haynes is hauling buttress material from the GFF.
- Haynes follows the same routine as yesterday, regarding dumping/placing/compacting the soil.
- Material is placed/compacted per specs.
- Julie McGowan is offsite.
- Bill Fredericks is ~~[illegible]~~ onsite.
- Bill & I walk the site & discuss the project. He was asked by OEPA to look e areas ~~[illegible]~~ along the river bank & see if he thought vegetation (willow stakes) should be planted.
- One compaction test failed ~~[illegible]~~ (low compaction & high moisture) the area was reworked & it passed.
- Bill is offsite
- Haynes is offsite.
- I leave the site.

Attachments:

- [ ] Contractor Report
- [ ] Field Notes
- [ ] Other

Bill [signature] — Signature of CQA Monitor

08/30/12 — Date

Brown AND Caldwell

Daily Field Report

Site: Ford Rd.

Project: Phase 2 Remediation Bid

Project No: [illegible]

BC Personnel: Bill Foster

Date: 08/31/12 (Friday)

Time In: 0700

Time Out: 1900

Weather: 65°-92° Sunny

Items Worked On:

- [ ] Mobilization/Demobilization
- [ ] Temporary Erosion and Sedimentation Control
- [ ] Site Preparation
- [ ] Sedimentation Basin Construction
- [ ] Access Road Construction
- [ ] Soil Drain Construction
- [x] Soil Buttress Construction
- [ ] Final Cap Construction
- [ ] River Bank Construction
- [ ] Vegetation
- [ ] Other -

Contractor/Subcontractors/Visitors/Alterations/Deliveries:

Contractor(s) - Haynes

Subcontractor(s) - N/A

Visitor(s) - N/A

Phone Call(s) - Rick Israel

Alterations - N/A

Material Delivered - Soil Buttress

Equipment Delivered - N/A

Summary of Work:

- on site
- Safety mtg.
- meet w/Dave to discuss the days work plan.
- Haynes continues to haul buttress material from the GFF.
- Haynes follows the same routine as yesterday... dumping/placing/compacting the soil.
- Soil is placed, per specs.
- All tests I take pass.
- Haynes buttons the site up, preparing for rain over the Labor Day weekend.
- Haynes is offsite.
- I leave the site. [redacted]

Attachments:

- [ ] Contractor Report
- [ ] Field Notes
- [ ] Other:

Bill Foster

Signature of CQA Monitor

08/31/12

Date

Brown AND Caldwell

Daily Field Report

Site: [illegible]

Project: [illegible]

Project No: [illegible]

BC Personnel: Bill Foster

Date: 09/04/12 (Tuesday)

Time In: [illegible]

Time Out: [redacted] 1600

Weather: 65°-80° Overcast/ Humid/ Rain

Items Worked On:

- ☐ [illegible]
- ☐ [illegible]
- ☐ [illegible]
- ☐ [illegible]
- ☐ [illegible]
- ☐ [illegible]
- ✓ [illegible]
- ☐ [illegible]
- ☐ [illegible]
- ☐ [illegible]
- ✓ Other: Progress Mtg.

Contractor/Subcontractors/Visitors/Alterations/Deliveries:

Contractor(s) - Haynes

Subcontractor(s) - N/A

Visitor(s) - Brian Holmes

Phone Call(s) - [illegible]

Alteration(s) - N/A

Material Delivered - Soil Buttress

Equipment Delivered - N/A

Summary of Work:

- On site
- Safety mtg.
- meet [illegible] onsite to discuss the days work [illegible]
- Haynes continues to haul buttress material from the GFF.
- Haynes follows the same routine as last week.
- Soil is placed per the specs.
- Brian Holmes is onsite for the progress mtg.
- We have the Mtg.
- Brian is offsite.
- All tests I take pass.
- Begins to rain @ 1430.
- Haynes is offsite.
- I leave the site.

Attachments:

- ☐ [illegible]
- ☐ [illegible]
- ☐ Other:

Bill Foster 09/04/12

Signature of CQA Monitor   Date

Brown Caldwell

Daily Field Report

Site:	Fort Ord	Date:	09/05/12 (Wed)
Project:	Phase 3 Remedial Action	Time In:	[illegible]
Project No:	[illegible]	Time Out:	1900
BC Personnel:	Bill Foster	Weather:	70°-85° Sunny

Items Worked On:

- [ ] Mobilization/Demobilization
- [ ] Temporary Erosion and Sedimentation Control
- [ ] Site Preparation
- [ ] Sedimentation Basin Construction
- [ ] Access Road Construction
- [ ] Base Drain Construction
- [x] Soil Buttress Construction - only hauling
- [ ] Final Cap Construction
- [ ] Final Cap Construction
- [ ] Vegetation
- [ ] Other

Contractor/Subcontractors/Visitors/Alterations/Deliveries:

Contractor(s) - Haynes
Subcontractor(s) - N/A
Visitor(s) - N/A
Phone Call(s) - Rick Isaac
Alteration(s) - N/A
Material Delivered - Soil Buttress
Equipment Delivered - N/A

Summary of Work:

- On site
- Safety mtg.
- meet w/Dave to discuss the days workplan
- Haynes is working the site to get it ready to haul buttress from the GFF. The rain yesterday afternoon has left the site wet & a [illegible] little sloppy.
- Mid morning, Haynes begins hauling buttress material from the GFF.
- Haynes does not place any buttress material on the slopes, they just have the trucks dump up top, & Haynes spreads the material out, up top, to use once the slopes are manageable.
- Haynes is offsite.
- I leave the site @ 1900.

Attachments:

- [ ] Contractor Report
- [ ] Field Notes
- [ ] Other

Bill Foster — Signature of DQS Monitor

09/05/12 — Date

Brown AND Caldwell

Daily Field Report

Site:	Ford Rd	Date:	09/06/12 (Thursday)
Project:	Phase 2 Remedial Action	Time In:	[illegible]
Project No:	[illegible]	Time Out:	[illegible]
BC Personnel:	Bill Foster	Weather:	70°-85° Sunny

Items Worked On:

- ☐ Mobilization Demobilization
- ☐ Temporary Erosion and Sedimentation Control
- ☐ Site Preparation
- ☐ Sedimentation Basin Construction
- ☐ Access Road Construction
- ☐ Seep Drain Construction
- ☑ Soil Buttress Construction
- ☐ Final Cap Construction
- ☐ Slurry Cap Construction
- ☐ Vegetation
- ☐ Other

Contractor/Subcontractors/Visitors/Alterations/Deliveries:

Contractor(s) - Haynes
Subcontractor(s) - N/A
Visitor(s) - N/A
Phone Call(s) - Rick Isaac
Alteration(s) - N/A
Material Delivered - Soil Buttress
Equipment Delivered - N/A

Summary of Work:

- On site
- Safety mtg.
- meet w/ Dave to discuss the day work plan
- Haynes continues to haul buttress material from the GFF
- Haynes follows the same routine as they did on 09/04/12.
- Soil is placed, per the specs.
- All tests I take pass.
- Haynes finishes up for the day + I offsite.
- I finish my paperwork from the site trailer + I leave the site.

Attachments:

- ☐ Contractor Report
- ☐ Field Notes
- ☐ Other

Bill Foster — Signature of CQA Monitor

09/06/12 — Date

Brown AND Caldwell

Daily Field Report

Site:	Ford Rd.	Date:	09/07/12 (Friday)
Project:	Phase 2 Remedial Action	Time In:	0700
Project No:	142889	Time Out:	1900
BC Personnel:	Bill Foster	Weather:	70°-90° Sunny

Items Worked On:

- ☐ Mobilization/Demobilization
- ☐ Temporary Erosion and Sedimentation Controls
- ☐ Site Preparation
- ☐ Sedimentation Basin Construction
- ☐ Access Road Construction
- ☐ Seep Drain Construction
- ☑ Soil Buttress Construction
- ☐ Final Cap Construction
- ☐ River Bank Construction
- ☐ Vegetation
- ☐ Other -

Contractor/Subcontractors/Visitors/Alterations/Deliveries:

Contractor(s) - Haynes
Subcontractor(s) - N/A
Visitor(s) - N/A
Phone Call(s) - Rick Isaac
Alteration(s) - N/A
Material Delivered - Soil Buttress
Equipment Delivered - N/A

Summary of Work:

- on site.
- safety mtg.
- meet w/Dave to discuss the days workplan.
- Haynes continues to haul buttress material from the GFF.
- Haynes is following the same routine as they did on wednesday (09/05/12)
- Soil is being dumped up top & spread out w/a dozer, but Haynes is not taking any to the slopes this morning because its to wet, from the rain we got yesterday.
- Haynes continues this process the remainder of the day.
- Haynes is offsite.
- I leave the site.

Attachments:

- ☐ Contractor Report
- ☐ Field Notes
- ☐ Other:

Signature of CQA Monitor: [signature] Date: 09/07/12

Brown AND Caldwell

Daily Field Report

Site:	Ford Rd.	Date:	09/10/12 (Monday)
Project:	Phase 2 Remedial Action	Time In:	0700
Project No:	142889	Time Out:	1900
BC Personnel:	Bill Foster	Weather:	55°-70° Sunny

Items Worked On:

- ☐ Mobilization/Demobilization
- ☐ Temporary Erosion and Sedimentation Controls
- ☐ Site Preparation
- ☐ Sedimentation Basin Construction
- ☐ Access Road Construction
- ☐ Seep Drain Construction
- ☑ Soil Buttress Construction - Hauling (only)
- ☐ Final Cap Construction
- ☐ River Bank Construction
- ☐ Vegetation
- ☐ Other -

Contractor/Subcontractors/Visitors/Alterations/Deliveries:

Contractor(s) - Haynes
Subcontractor(s) - N/A
Visitor(s) - N/A
Phone Call(s) - Rick Isaac
Alteration(s) - N/A
Material Delivered - Soil Buttress
Equipment Delivered - N/A

Summary of Work:

- on site.
- safety mtg.
- meet w/Dave to discuss the days workplan.
- Haynes continues to haul buttress material from the GFF.
- Haynes is following the same routine as they did on Friday (09/07/12).
- soil is dumped on top, spread w/the dozer.
- No soil is placed on the slopes because they are still too wet, from rain over the weekend
- Haynes is offsite.
- I leave the site.

Attachments:

- ☐ Contractor Report
- ☐ Field Notes
- ☐ Other:

BN [illegible] 09/10/12

Signature of CQA Monitor — Date

Brown AND Caldwell

Daily Field Report

Site:	Ford Rd.	Date:	09/11/12 (Tuesday)
Project:	Phase 2 Remedial Action	Time In:	0700
Project No:	142889	Time Out:	1900
BC Personnel:	Bill Foster	Weather:	65°-85° Sunny

Items Worked On:

- ☐ Mobilization/Demobilization
- ☐ Temporary Erosion and Sedimentation Controls
- ☐ Site Preparation
- ☐ Sedimentation Basin Construction
- ☐ Access Road Construction
- ☐ Seep Drain Construction
- ☒ Soil Buttress Construction
- ☐ Final Cap Construction
- ☐ River Bank Construction
- ☐ Vegetation
- ☒ Other - Weekly Progress Mtg.

Contractor/Subcontractors/Visitors/Alterations/Deliveries:

Contractor(s) - Haynes
Subcontractor(s) - N/A
Visitor(s) - Clarissa Gereby
Phone Call(s) - Rick Isaac
Alteration(s) - N/A
Material Delivered - Soil Buttress
Equipment Delivered - N/A

Summary of Work:

- on site.
- safety mtg.
- meet w/Dave to discuss the days workplan.
- Haynes continues to haul buttress material from the GFF
- Haynes is dumping up top, spreading out w/a dozer, picking up w/pans, and placing on the slopes. A dozer levels each lift + then it is compacted.
- Soil is placed/compacted per the specs.
- All tests I take pass.
- Haynes finishes up for the day + is offsite.
- I leave the site.

- Clarissa Gereby is onsite for the mtg.
- We walk the site after the mtg.
- Clarissa is offsite

Attachments:

- ☐ Contractor Report
- ☐ Field Notes
- ☐ Other:

Bill Foster — Signature of CQA Monitor

09/11/12 — Date

Brown AND Caldwell

Daily Field Report

Site:	Ford Rd.	Date:	09/12/12 (wed)
Project:	Phase 2 Remedial Action	Time In:	0700
Project No:	142888	Time Out:	1900
BC Personnel:	Bill Foster	Weather:	65°-85° Sunny

Items Worked On:

- [ ] Mobilization/Demobilization
- [ ] Temporary Erosion and Sedimentation Controls
- [ ] Site Preparation
- [ ] Sedimentation Basin Construction
- [ ] Access Road Construction
- [ ] Steep Drain Construction
- [x] Soil Buttress Construction
- [ ] Final Cap Construction
- [ ] River Bank Construction
- [ ] Vegetation
- [ ] Other -

Contractor/Subcontractors/Visitors/Alterations/Deliveries:

Contractor(s) - Haynes
Subcontractor(s) - N/A
Visitor(s) - N/A
Phone Call(s) - Rick Isaac
Alteration(s) - N/A
Material Delivered - Soil Buttress
Equipment Delivered - N/A

Summary of Work.

- On site
- Safety mtg.
- meet w/Dave to discuss the days workplan.
- Haynes continues to haul buttress material from the BFF.
- Haynes follows the same routine as yesterday (09/11/12).
- All soil is placed + compacted, per the specs.
- All tests I take pass.
- Haynes will continue this process the rest of the week.
- Haynes wraps up for the day + is offsite.
- I leave the site.

Attachments:

- [ ] Contractor Report
- [ ] Field Notes
- [ ] Other:

BN KT — Signature of CQA Monitor — 09/12/12 — Date

Brown AND Caldwell

Daily Field Report

Site:	Ford Rd.	Date:	09/13/12 (Thursday)
Project:	Phase 2 Remedial Action	Time In:	0700
Project No:	142889	Time Out:	1900
BC Personnel:	Bill Foster	Weather:	65°-85° Sunny

Items Worked On:

- ☐ Mobilization/Demobilization
- ☐ Temporary Erosion and Sedimentation Controls
- ☐ Site Preparation
- ☐ Sedimentation Basin Construction
- ☐ Access Road Construction
- ☐ Seep Drain Construction
- ☒ Soil Buttress Construction
- ☐ Final Cap Construction
- ☐ River Bank Construction
- ☐ Vegetation
- ☒ Other - Tree clearing (Along Ford Rd)

Contractor/Subcontractors/Visitors/Alterations/Deliveries:

Contractor(s) - Haynes
Subcontractor(s) - [redacted] Lescher Tree Care + Land Clearing
Visitor(s) -
Phone Call(s) - Rick Isaac
Alteration(s) - N/A
Material Delivered - Soil Buttress
Equipment Delivered - N/A

Summary of Work:

- On site.
- Safety mtg.
- meet w/Dave to discuss the days workplan.
- Haynes continues to haul buttress material from the 6PF.
- Lescher Tree Care + Land Clearing is onsite to clear the [redacted] trees along Ford Rd, that are impacted by the soil cap.
- Haynes places/compacts all soil, per the specs.
- Lescher Tree Care + Land Clearing finishes clearing the trees, chips the wood, stockpiles the wood chips onsite + is offsite.
- All soil tests I take pass.
- Haynes buttons up the site, preparing for possible rain overnight, + is offsite.
- I leave the site.

Attachments:

- ☐ Contractor Report
- ☐ Field Notes
- ☐ Other:

BN [illegible] — Signature of CQA Monitor

09/13/12 — Date

Brown AND Caldwell

Daily Field Report

Site:	Ford Rd.	Date:	09/14/12 (Friday)
Project:	Phase 2 Remedial Action	Time In:	0700
Project No:	142889	Time Out:	1300
BC Personnel:	Bill Foster	Weather:	60°-70° overcast/Rai

Items Worked On:

- ☐ Mobilization/Demobilization
- ☐ Temporary Erosion and Sedimentation Controls
- ☐ Site Preparation
- ☐ Sedimentation Basin Construction
- ☐ Access Road Construction
- ☐ Seep Drain Construction
- ☒ Soil Buttress Construction
- ☒ Final Cap Construction (along Ford Rd)
- ☐ River Bank Construction
- ☐ Vegetation
- ☐ Other -

Contractor/Subcontractors/Visitors/Alterations/Deliveries:

Contractor(s) - Haynes
Subcontractor(s) - N/A
Visitor(s) - N/A
Phone Call(s) - Rick Isaac
Alteration(s) - N/A
Material Delivered - Soil Buttress
Equipment Delivered - N/A

Summary of Work:

- On site.
- Safety mtg.
- meet w/Dave to discuss the days workplan.
- Haynes continues hauling buttress material from the GFF
- Haynes follows the same routine as Tuesday, Wed, + Thursday of this week.
- Soil is placed/compacted, per the specs.
- Haynes also placed some of the stockpiled, camp work, cap soil, in the area where the trees were cleared.
- This soil is also placed/compacted, per the specs.
- Begin to rain befor Haynes can get a full lift placed.
- No tests were taken.
- Haynes buttons up + is offsite
- Leave the site @ 1300

Attachments:

- ☐ Contractor Report
- ☐ Field Notes
- ☐ Other:

BN [illegible] — Signature of CQA Monitor

09/14/12 — Date

Brown AND Caldwell

Daily Field Report

Site:	Ford Rd.	Date:	09/17/12 (Monday)
Project:	Phase 2 Remedial Action	Time In:	0700
Project No:	142889	Time Out:	1900
BC Personnel:	Bill Foster	Weather:	60°-80° P. Sunny

Items Worked On:

- ☐ Mobilization/Demobilization
- ☐ Temporary Erosion and Sedimentation Controls
- ☐ Site Preparation
- ☐ Sedimentation Basin Construction
- ☐ Access Road Construction
- ☐ Seep Drain Construction
- ☑ Soil Buttress Construction
- ☑ Final Cap Construction
- ☐ River Bank Construction
- ☐ Vegetation
- ☐ Other -

Contractor/Subcontractors/Visitors/Alterations/Deliveries:

Contractor(s) - Haynes
Subcontractor(s) - N/A
Visitor(s) - N/A
Phone Call(s) - Rick Isaac
Alteration(s) - N/A
Material Delivered - Soil Buttress
Equipment Delivered - N/A

Summary of Work:

- On site.
- Safety mtg.
- Meet w/Dave to discuss the days workplan.
- Haynes continues hauling buttress material from the GFF.
- Haynes follows the same routine as they did last Friday.
- Soil is placed/compacted, per the specs.
- Haynes also strips the remaining topsoil, along Ford Rd.
- Haynes places/compacts cap material, per the specs, in the area where the topsoil was stripped.
- All tests I take pass.
- Haynes buttons up for possible rain overnight.
- Haynes is offsite.
- I leave the site.

Attachments:

- ☐ Contractor Report
- ☐ Field Notes
- ☐ Other:

BN [illegible] 09/17/12

Signature of CQA Monitor — Date

Brown AND Caldwell

Daily Field Report

Site:	Ford Rd.	Date:	09/19/12 (Wed)
Project:	Phase 2 Remedial Action	Time In:	0700
Project No:	142889	Time Out:	1700
BC Personnel:	Bill Foster	Weather:	50°-65° Sunny

Items Worked On:

- ☐ Mobilization/Demobilization
- ☐ Temporary Erosion and Sedimentation Controls
- ☐ Site Preparation
- ☐ Sedimentation Basin Construction
- ☐ Access Road Construction
- ☐ Seep Drain Construction
- ☐ Soil Buttress Construction
- ☐ Final Cap Construction
- ☐ River Bank Construction
- ☐ Vegetation
- ☒ Other: Stake out 7 replacement wells

Contractor/Subcontractors/Visitors/Alterations/Deliveries:

Contractor(s) - Haynes
Subcontractor(s) - N/A
Visitor(s) - N/A
Phone Call(s) - Rick Isaac
Alteration(s) - N/A
Material Delivered - N/A
Equipment Delivered - N/A

Summary of Work:

- On site.
- Safety mtg.
- Meet w/Dave to discuss the days workplan.
- The site is still too wet to haul ostress material, so Haynes is going to work on equipment today.
- I use Haynes GPS equipment + stake out the 7 replacement wells.
- Drillers will be onsite next Monday to begin drilling the wells.
- Haynes is offsite.
- I leave the site.

Attachments:

- ☐ Contractor Report
- ☐ Field Notes
- ☐ Other:

BN RT — Signature of CQA Monitor

09/19/12 — Date

Brown AND Caldwell

Daily Field Report

Site:	Ford Rd.	Date:	09/20/12 (Thursday)
Project:	Phase 2 Remedial Action	Time In:	0700
Project No:	142889	Time Out:	1900
BC Personnel:	Bill Foster	Weather:	55°-70° P. Sunny

Items Worked On:

- ☐ Mobilization/Demobilization
- ☐ Temporary Erosion and Sedimentation Controls
- ☐ Site Preparation
- ☐ Sedimentation Basin Construction
- ☐ Access Road Construction
- ☐ Seep Drain Construction
- ☑ Soil Buttress Construction
- ☑ Final Cap Construction
- ☐ River Bank Construction
- ☐ Vegetation
- ☐ Other -

Contractor/Subcontractors/Visitors/Alterations/Deliveries:

Contractor(s) - Haynes
Subcontractor(s) - N/A
Visitor(s) - N/A
Phone Call(s) - Rick Isaac, Paul Miller
Alteration(s) - N/A
Material Delivered - Soil Buttress
Equipment Delivered - N/A

Summary of Work:

- On site.
- Safety mtg.
- meet w/Dave to discuss the days workplan.
- Haynes is hauling buttress material, from the LFF.
- Haynes follows the same routine as they did on Monday (09/17/12)
- Soil is placed + compacted, per the specs.
- Haynes also places some more cap material, per the specs, as well.
- All tests I take pass
- Haynes finishes + is offsite.
- I leave the site.

Attachments:

- ☐ Contractor Report
- ☐ Field Notes
- ☐ Other:

Bill Foster 09/20/12

Signature of CQA Monitor — Date

Brown AND Caldwell

Daily Field Report

Site:	Ford Rd.	Date:	09/21/12 (Friday)
Project:	Phase 2 Remedial Action	Time In:	0700
Project No:	142889	Time Out:	1900
BC Personnel:	Bill Foster	Weather:	60°-70° Cloudy

Items Worked On:

- ☐ Mobilization/Demobilization
- ☐ Temporary Erosion and Sedimentation Controls
- ☐ Site Preparation
- ☐ Sedimentation Basin Construction
- ☐ Access Road Construction
- ☐ Seep Drain Construction
- ☒ Soil Buttress Construction
- ☐ Final Cap Construction
- ☐ River Bank Construction
- ☐ Vegetation
- ☐ Other -

Contractor/Subcontractors/Visitors/Alterations/Deliveries:

Contractor(s) - Haynes
Subcontractor(s) - N/A
Visitor(s) - N/A
Phone Call(s) - Rick Isaac
Alteration(s) - N/A
Material Delivered - Soil Buttress
Equipment Delivered - N/A

Summary of Work:

- on site.
- safety mtg.
- meet w/Dave to discuss the days workplan.
- Haynes continues to haul buttress material, from the GFF
- Haynes follows the same routine as they did yesterday.
- All soil is placed/compacted, per the specs.
- All tests I take pass.
- Haynes buttons up the site, for possible rain tonight & tomorrow.
- Haynes is offsite.
- I leave the site.

Attachments:

- ☐ Contractor Report
- ☐ Field Notes
- ☐ Other:

Bill Foster — Signature of CQA Monitor

09/21/12 — Date

Brown AND Caldwell

Daily Field Report

Site:	Ford Rd.	Date:	09/24/12 (monday)
Project:	Phase 2 Remedial Action	Time In:	0700
Project No:	142889	Time Out:	1900
BC Personnel:	Bill Foster, Pete Schlater	Weather:	45°-65° Sunny

Items Worked On:

- ☐ Mobilization/Demobilization
- ☐ Temporary Erosion and Sedimentation Controls
- ☐ Site Preparation
- ☐ Sedimentation Basin Construction
- ☐ Access Road Construction
- ☐ Seep Drain Construction
- ☐ Soil Buttress Construction
- ☐ Final Cap Construction
- ☐ River Bank Construction
- ☐ Vegetation
- ☒ Other - Haul + stockpile topsoil
  " + " buttress

Contractor/Subcontractors/Visitors/Alterations/Deliveries:

Contractor(s) - Haynes
Subcontractor(s) - [redacted] TTL
Visitor(s) - N/A
Phone Call(s) - Rick Isaac
Alteration(s) - N/A
Material Delivered - Topsoil
Equipment Delivered - N/A

Summary of Work:

- on site.
- safety mtg.
- meet w/Dave to discuss the days workplan.
- Haynes begins ~~[illegible]~~ hauling topsoil from the OFF.
- the site is to wet + muddy for Haynes to do anything else.
- Haynes stockpiles the topsoil. This topsoil need to be treated w/lime, to bring the pH up from 4.2 to a min of 6. This soil will be deployed on the cap, not the buttress.
- Haynes continues hauling topsoil until 1500, then they begin hauling + stockpiling buttress material the remainder of the day.
- Pete Schlater is onsite.
- TTL is onsite.
- Pete discusses drilling w/TTL. TTL will begin drilling tomorrow morning.
- TTL is offsite.
- Haynes is offsite.
- Pete + I leave the site.

Attachments:

- ☐ Contractor Report
- ☐ Field Notes
- ☐ Other:

Bill Foster — Signature of CQA Monitor

09/24/12 — Date

Brown AND Caldwell

Daily Field Report

Site:	Ford Rd.	Date:	09/25/12 (Tuesday)
Project:	Phase 2 Remedial Action	Time In:	0700
Project No:	142889	Time Out:	1900
BC Personnel:	Bill Foster, Pete Schlater	Weather:	50°-70° P. Sunny

Items Worked On:

- ☐ Mobilization/Demobilization
- ☐ Temporary Erosion and Sedimentation Controls
- ☐ Site Preparation
- ☐ Sedimentation Basin Construction
- ☐ Access Road Construction
- ☐ Seep Drain Construction
- ☒ Soil Buttress Construction
- ☐ Final Cap Construction
- ☐ River Bank Construction
- ☐ Vegetation
- ☒ Other - Drilling GW monitoring wells - weekly Progress Mtg.

Contractor/Subcontractors/Visitors/Alterations/Deliveries:

Contractor(s) - Haynes
Subcontractor(s) - ITL
Visitor(s) - Rick Isaac, Clarissa Gereby
Phone Call(s) - Rick Isaac
Alteration(s) - N/A
Material Delivered - Soil Buttress
Equipment Delivered - N/A

Summary of Work:

- On site.
- Safety mtg.
- meet w/Dave to discuss the days workplan.
- Haynes continues to haul buttress material from the GFF.
- Haynes follows the same routine as they did last Friday (09/21/12)
- All soil is placed + compacted per the specs.
- ITL + Pete Schlater (Brown + Caldwell) are onsite.
- ITL drills groundwater monitoring wells #3 + #4 today.
- Rick Isaac is onsite.
- Clarissa Gereby is onsite.
- We have the Mtg. Rick, Clarissa + I walk the site after the mtg.
- Rick + Clarissa are offsite.
- All soil tests I take pass.
- ITL + Pete are offsite.
- Haynes buttons up + is offsite.
- I leave the site.

Attachments:

- ☐ Contractor Report
- ☐ Field Notes
- ☐ Other:

BiN [illegible] 09/25/12

Signature of CQA Monitor — Date

Brown AND Caldwell

Daily Field Report

Site:	Ford Rd.	Date:	09/27/12 (Thursday)
Project:	Phase 2 Remedial Action	Time In:	0700
Project No:	142889	Time Out:	1900
BC Personnel:	Bill Foster, Pete Schlater	Weather:	55°-65° overcast

Items Worked On:

- ☐ Mobilization/Demobilization
- ☐ Temporary Erosion and Sedimentation Controls
- ☐ Site Preparation
- ☐ Sedimentation Basin Construction
- ☐ Access Road Construction
- ☐ Seep Drain Construction
- ☐ Soil Buttress Construction
- ☑ Final Cap Construction – Haul Topsoil
- ☐ River Bank Construction
- ☐ Vegetation
- ☑ Other - Groundwater Monitoring Well Drilling

Contractor/Subcontractors/Visitors/Alterations/Deliveries:

Contractor(s) - Haynes
Subcontractor(s) - [redacted] TTL
Visitor(s) - Bill Frederich
Phone Call(s) - Rick Isaac
Alteration(s) - N/A
Material Delivered - Topsoil
Equipment Delivered - N/A

Summary of Work:

- On site.
- Safety mtg.
- Meet w/Dave to discuss the days workplan.
- Too wet, from the rain, to place buttress today, so Haynes is only hauling + stockpiling topsoil.
- Haynes does this all day.
- TTL is onsite to continue drilling groundwater monitoring wells.
- Bill Frederich is onsite. Bill stays till noon + observes one well being drilled.
- TTL drills wells # 2 + # 9.
- TTL is offsite.
- Pete Schlater is offsite.
- Haynes is offsite.
- I leave the site.

Attachments:

- ☐ Contractor Report
- ☐ Field Notes
- ☐ Other:

BN [illegible] 09/27/12

Signature of CQA Monitor — Date

Brown AND Caldwell

Daily Field Report

Site:	Ford Rd.	Date:	09/28/12 (Friday)
Project:	Phase 2 Remedial Action	Time In:	0700
Project No:	142889	Time Out:	1900
BC Personnel:	Bill Foster, Pete Schlater	Weather:	50°-65° Sunny

Items Worked On:

- ☐ Mobilization/Demobilization
- ☐ Temporary Erosion and Sedimentation Controls
- ☐ Site Preparation
- ☐ Sedimentation Basin Construction
- ☐ Access Road Construction
- ☐ Seep Drain Construction
- ☑ Soil Buttress Construction
- ☐ Final Cap Construction
- ☐ River Bank Construction
- ☐ Vegetation
- ☑ Other: Groundwater Monitoring well Drilling

Contractor/Subcontractors/Visitors/Alterations/Deliveries:

Contractor(s) - Haynes
Subcontractor(s) - N/A
Visitor(s) - Joe Montello
Phone Call(s) - Rick Isaac
Alteration(s) - N/A
Material Delivered - Soil Buttress
Equipment Delivered - N/A

Summary of Work:

- On site.
- Safety mtg.
- meet w/Dave to discuss the days workplan.
- Haynes is hauling buttress material, from the 6FF.
- Pete schlater is onsite to provide drilling oversight.
- TTL drills wells #8 + #1R.
- Joe Montello is onsite.
- Haynes follows the same routine as they did Tuesday (09/25/12).
- All soil is placed + compacted, per the specs.
- All tests I take pass.
- Joe is offsite.
- TTL is offsite.
- Pete is offsite
- Haynes finished for the day + is offsite.
- I leave the site.

Attachments:

- ☐ Contractor Report
- ☐ Field Notes
- ☐ Other:

Bill Foster — 09/28/12

Signature of CQA Monitor — Date

Brown AND Caldwell

Daily Field Report

Site:	Ford Rd.	Date:	09/28/12 (Saturday)
Project:	Phase 2 Remedial Action	Time In:	0700
Project No:	142889	Time Out:	1600
BC Personnel:	Bill Foster	Weather:	55°-70° Sunny

Items Worked On:

- ☐ Mobilization/Demobilization
- ☐ Temporary Erosion and Sedimentation Controls
- ☐ Site Preparation
- ☐ Sedimentation Basin Construction
- ☐ Access Road Construction
- ☐ Seep Drain Construction
- ☑ Soil Buttress Construction
- ☐ Final Cap Construction
- ☐ River Bank Construction
- ☐ Vegetation
- ☐ Other -

Contractor/Subcontractors/Visitors/Alterations/Deliveries:

Contractor(s) - Haynes
Subcontractor(s) - N/A
Visitor(s) - N/A
Phone Call(s) - Rick Isaac
Alteration(s) - N/A
Material Delivered - Soil Buttress
Equipment Delivered - N/A

Summary of Work:

- On site.
- Safety mtg.
- meet w/Dave to discuss the days workplan.
- Haynes continues hauling buttress material, from the BFE.
- Haynes follows the same routine, as they did yesterday.
- All soil is placed & compacted, per the specs.
- All tests I take pass.
- Buttress material is finished @ the north & south access rds, to the turns, near the river.
- Haynes wraps up & is offsite.
- I leave the site.

Attachments:

- ☐ Contractor Report
- ☐ Field Notes
- ☐ Other:

BN [illegible] 09/28/12

Signature of CQA Monitor — Date

Brown AND Caldwell

Daily Field Report

Site:	Ford Rd.	Date:	10/01/12 (monday)
Project:	Phase 2 Remedial Action	Time In:	0700
Project No:	142889	Time Out:	1900
BC Personnel:	Bill Foster, Joe Warburton	Weather:	55°-70° P. Sunny

Items Worked On:

- ☐ Mobilization/Demobilization
- ☐ Temporary Erosion and Sedimentation Controls
- ☐ Site Preparation
- ☐ Sedimentation Basin Construction
- ☐ Access Road Construction
- ☐ Seep Drain Construction
- ☐ Soil Buttress Construction
- ☒ Final Cap Construction
- ☐ River Bank Construction
- ☐ Vegetation
- ☒ Other - Groundwater Monitoring Well Drilling/Development

Contractor/Subcontractors/Visitors/Alterations/Deliveries:

Contractor(s) - Haynes
Subcontractor(s) - TTL
Visitor(s) - N/A
Phone Call(s) - Rick Isaac
Alteration(s) - N/A
Material Delivered - N/A
Equipment Delivered - N/A

Summary of Work:

- On site.
- Safety mtg.
- meet w/Dave to discuss the days workplan.
- Haynes is not hauling any material today. They will concentrate on placing + compacting the stockpiled cap material, in the area around the site trailer.
- Haynes places + compacts the cap material, per the specs.
- All tests I take pass.
- TTL + Joe Warburton (BC) are onsite to drill the last well.
- The well is drilled. TTL + Joe are offsite.
- Haynes places topsoil on the cap area + on the south slope of the buttress.
- Haynes finishes + is offsite.
- I leave the site.

Attachments:

- ☐ Contractor Report
- ☐ Field Notes
- ☐ Other:

BN [illegible] 10/01/12

Signature of CQA Monitor — Date

Brown AND Caldwell

Daily Field Report

Site: Ford Rd.	Date: 10/04/12 (Thursday)
Project: Phase 2 Remedial Action	Time In: 0700
Project No: 142869	Time Out: 1900
BC Personnel: Bill Foster	Weather: 55°-75° P. Sunny

Items Worked On:

- ☐ Mobilization/Demobilization
- ☐ Temporary Erosion and Sedimentation Controls
- ☐ Site Preparation
- ☐ Sedimentation Basin Construction
- ☐ Access Road Construction
- ☐ Seep Drain Construction
- ☑ Soil Buttress Construction
- ☐ Final Cap Construction
- ☐ River Bank Construction
- ☐ Vegetation
- ☐ Other -

Contractor/Subcontractors/Visitors/Alterations/Deliveries:

Contractor(s) - Haynes
Subcontractor(s) - N/A
Visitor(s) - Brian Holmes, Mark Haynes
Phone Call(s) - Rick Isaac
Alteration(s) - N/A
Material Delivered - Soil Buttress
Equipment Delivered - N/A

Summary of Work:

- On site.
- Safety mtg.
- Meet w/Dave to discuss the days workplan.
- Haynes is hauling buttress material, from the BFF.
- Haynes follows the same routine, as they did last saturday (09/29/12)
- All soil is placed + compacted, per the specs.
- All tests to take pass.
- Brian Holmes stops by, for a few mins, to chat about the project.
- Mark Haynes stops by, for a few mins, to check on progress + to talk to his guys.
- Haynes completes soil buttress placement today!
- Haynes is offsite.
- I leave the site.

Attachments:

- ☐ Contractor Report
- ☐ Field Notes
- ☐ Other:

Bill Foster — Signature of CQA Monitor

10/04/12 — Date

Brown AND Caldwell

Daily Field Report

Site:	Ford Rd.	Date:	10/05/17 (Friday)
Project:	Phase 2 Remedial Action	Time In:	0700
Project No:	142889	Time Out:	1900
BC Personnel:	Bill Foster	Weather:	50°-60° overcast/ Rain

Items Worked On:

- ☐ Mobilization/Demobilization
- ☐ Temporary Erosion and Sedimentation Controls
- ☐ Site Preparation
- ☐ Sedimentation Basin Construction
- ☐ Access Road Construction
- ☐ Seep Drain Construction
- ☐ Soil Buttress Construction
- ☐ Final Cap Construction
- ☐ River Bank Construction
- ☐ Vegetation
- ☒ Other - Spread Topsoil on slopes

Contractor/Subcontractors/Visitors/Alterations/Deliveries:

Contractor(s) - Haynes
Subcontractor(s) - N/A
Visitor(s) - N/A
Phone Call(s) - Rick Isaac
Alteration(s) - N/A
Material Delivered - N/A
Equipment Delivered - N/A

Summary of Work:

- on site.
- Safety mtg.
- meet w/Dave to discuss the days workplan.
- Haynes is going to spread topsoil till day today, or at least until it rains.
- Begins to sprinkle @ lunchtime.
- Rain increases & Haynes decides to call it a day.
- Haynes is offsite.
- I leave the site.

Attachments:

- ☐ Contractor Report
- ☐ Field Notes
- ☐ Other:

BN Foster — Signature of CQA Monitor

10/05/17 — Date

Brown AND Caldwell

Daily Field Report

Site: Ford Rd.

Project: Phase 2 Remedial Action

Project No: 142869

BC Personnel: Bill Foster

Date: 10/09/12 (Tuesday)

Time In: 0700

Time Out: 1900

Weather: 45° - 60° Sunny

Items Worked On:

- [ ] Mobilization/Demobilization
- [ ] Temporary Erosion and Sedimentation Controls
- [ ] Site Preparation
- [x] Sedimentation Basin Construction - Clean out silt
- [ ] Access Road Construction
- [ ] Seep Drain Construction
- [x] Soil Buttress Construction - Topsoil Placement
- [x] Final Cap Construction - Topsoil Placement
- [ ] River Bank Construction
- [ ] Vegetation
- [x] Other - Progress Mtg.

Contractor/Subcontractors/Visitors/Alterations/Deliveries:

Contractor(s) - Haynes

Subcontractor(s) - N/A

Visitor(s) - Brian Holmes

Phone Call(s) - Rick Isaac

Alteration(s) - N/A

Material Delivered - N/A

Equipment Delivered - N/A

Summary of Work:

- On site.
- Safety mtg.
- meet w/Dave to discuss the days workplan.
- Haynes is placing topsoil on the cap + slopes today.
- Haynes is also cleaning the silt from the bottom of the sed pond.
- Brian Holmes is onsite for the weekly progress mtg.
- We have the mtg.
- Brian Holmes is offsite.
- Haynes finishes cleaning the silt from the sed pond.
- Haynes continues placing topsoil on the cap + slopes.
- Haynes is offsite.
- I leave the site.

Attachments:

- [ ] Contractor Report
- [ ] Field Notes
- [ ] Other:

Bill Foster — Signature of CQA Monitor

10/09/12 — Date

Brown AND Caldwell

Daily Field Report

Site:	Ford Rd.	Date:	10/11/12 (Thursday)
Project:	Phase 2 Remedial Action	Time In:	0700
Project No:	142889	Time Out:	1900
BC Personnel:	Bill Foster	Weather:	40°-60° Sunny

Items Worked On:

- ☐ Mobilization/Demobilization
- ☐ Temporary Erosion and Sedimentation Controls
- ☐ Site Preparation
- ☐ Sedimentation Basin Construction
- ☐ Access Road Construction
- ☐ Seep Drain Construction
- ☑ Soil Buttress Construction - Topsoil
- ☐ Final Cap Construction
- ☐ River Bank Construction
- ☐ Vegetation
- ☑ Other - Survey 7 new groundwater monitoring wells.

Contractor/Subcontractors/Visitors/Alterations/Deliveries:

Contractor(s) - Haynes
Subcontractor(s) - Bair Goodie + Assoc.
Visitor(s) -
Phone Call(s) - Rick Isaac
Alteration(s) - N/A
Material Delivered - N/A
Equipment Delivered - N/A

Summary of Work:

- on site.
- safety mtg.
- meet w/Dave to discuss the days workplan.
- Haynes is placing topsoil on the slopes, picking up where they left off at on Tuesday.
- 2 surveyor, from Bair Goodie are onsite to locate the 7 new groundwater monitoring wells.
- wells are located & surveyors are offsite.
- Haynes continues placing topsoil the remainder of the day.
- Haynes is offsite.
- I leave the site.

Attachments:

- ☐ Contractor Report
- ☐ Field Notes
- ☐ Other:

BW [illegible] — Signature of CQA Monitor

10/11/12 — Date

Brown AND Caldwell

Daily Field Report

Site: Ford Rd.

Project: Phase 2 Remedial Action

Project No: 142869

BC Personnel: Bill Foster

Date: 10/12/12 (Friday)

Time In: 0700

Time Out: 1900

Weather: 40°-55° Sunny

Items Worked On:

- ☐ Mobilization/Demobilization
- ☐ Temporary Erosion and Sedimentation Controls
- ☐ Site Preparation
- ☐ Sedimentation Basin Construction
- ☐ Access Road Construction
- ☐ Seep Drain Construction
- ☒ Soil Buttress Construction - Topsoil Placement
- ☒ Final Cap Construction - Topsoil Placement
- ☐ River Bank Construction
- ☐ Vegetation
- ☐ Other -

Contractor/Subcontractors/Visitors/Alterations/Deliveries:

Contractor(s) - Haynes

Subcontractor(s) - N/A

Visitor(s) - N/A

Phone Call(s) - Rick Isaac

Alteration(s) - N/A

Material Delivered - NetPave 50

Equipment Delivered - N/A

Summary of Work:

- on site.
- safety mtg.
- meet w/Dave to discuss the days workplan.
- Haynes continues placing topsoil.
- NetPave 50 is delivered.
- Haynes places topsoil the remainder of the day.
- Haynes is offsite.
- I leave the site.

Attachments:

- ☐ Contractor Report
- ☐ Field Notes
- ☐ Other:

BN Foster — Signature of CQA Monitor

10/12/12 — Date

Brown AND Caldwell

Daily Field Report

Site:	Ford Rd.	Date:	10/15/12 (Monday)
Project:	Phase 2 Remedial Action	Time In:	0700
Project No:	142889	Time Out:	1900
BC Personnel:	Bill Foster	Weather:	45°-55° Overcast

Items Worked On:

- ☐ Mobilization/Demobilization
- ☐ Temporary Erosion and Sedimentation Controls
- ☐ Site Preparation
- ☒ Sedimentation Basin Construction - check Dams
- ☒ Access Road Construction - Fabric & Aggregate
- ☐ Seep Drain Construction
- ☐ Soil Buttress Construction
- ☐ Final Cap Construction
- ☐ River Bank Construction
- ☐ Vegetation
- ☒ Other - Landscapers onsite to observe conditions, etc.

Contractor/Subcontractors/Visitors/Alterations/Deliveries:

Contractor(s) - Haynes

Subcontractor(s) - [illegible]

Visitor(s) - Mike Wathins

Phone Call(s) - Rick Tsaer

Alteration(s) - N/A

Material Delivered - #304 Aggregate

Equipment Delivered - N/A

Summary of Work:

- on site.
- Safety mtg.
- meet w/Dave to discuss the days workplan.
- Haynes begins hauling #304 aggregate to the site. Mike Wathins is onsite.
- Haynes places fabric & #304, on access rd, per specs. Mike + I walk the site
- [illegible] to discuss the project. Its still too wet for them to begin. They walk the site & are offsite, Mike is offsite.
- Haynes installs the check dams in the sed pond, per the specs.
- Haynes finishes for the day & is offsite.
- I leave the site.

Attachments:

- ☐ Contractor Report
- ☐ Field Notes
- ☐ Other:

Bill Foster — Signature of CQA Monitor

10/15/12 — Date

Brown AND Caldwell

Daily Field Report

Site:	Ford Rd.	Date:	10/16/12 (Tuesday)
Project:	Phase 2 Remedial Action	Time In:	0700
Project No:	142869	Time Out:	1900
BC Personnel:	Bill Foster	Weather:	45°-60° P. Cloudy

Items Worked On:

- ☐ Mobilization/Demobilization
- ☒ Temporary Erosion and Sedimentation Controls - Driveable Drainage Channel
- ☐ Site Preparation
- ☐ Sedimentation Basin Construction
- ☒ Access Road Construction
- ☐ Seep Drain Construction
- ☐ Soil Buttress Construction
- ☒ Final Cap Construction - site Trailer Area.
- ☐ River Bank Construction
- ☒ Vegetation
- ☒ Other- Final Grade Topo
  - unhook electric @ site trailer
  - weekly progress mtg.
  - move site trailer

Contractor/Subcontractors/Visitors/Alterations/Deliveries:

Contractor(s) - Haynes
Subcontractor(s) - KS + Assoc, Zak + Co., Callihan Electric
Visitor(s) - Vanessa Steigerwald-Dick, Clarissa Gereby
Phone Call(s) - Rick Isaac
Alteration(s) - N/A
Material Delivered - #304 Aggregate, #57 stone, + #411 aggregate
Equipment Delivered - N/A

Summary of Work:

- on site.
- safety mtg.
- meet w/Claire to discuss the days workplan.
- Haynes continues placing fabric [redacted] + #304 on access rd, per spec
- KS is onsite for Final Topo.
- Zak + Co is onsite to track the slopes + quantity take offs.
- Callihan is onsite to unhook electricity from the site trailer.
- Electricity is unhooked + Callihan is offsite.
- Vanessa + Clarissa are onsite. We walk the site.
- We have the weekly progress mtg.
- Vanessa + Clarissa are offsite.
- The site trailer is moved + Haynes places + compacts final cap, per specs, then places topsoil.
- Haynes places fabric, #57 stone on the driveable drainage channel.
- Haynes begin placing #411 on the access rd.
- Haynes, KS, + Zak are offsite.
- I leave the site.

Attachments:

- ☐ Contractor Report
- ☐ Field Notes
- ☐ Other:

BN Foster — Signature of CQA Monitor

10/16/12 — Date

Brown AND Caldwell

Daily Field Report

Site:	Ford Rd.	Date:	10/17/12 (Wed)
Project:	Phase 2 Remedial Action	Time In:	0700
Project No:	142889	Time Out:	1900
BC Personnel:	Bill Foster	Weather:	55°-75° P. Cloudy

Items Worked On:

- ☐ Mobilization/Demobilization
- ☐ Temporary Erosion and Sedimentation Controls
- ☐ Site Preparation
- ☐ Sedimentation Basin Construction
- ☑ Access Road Construction
- ☐ Seep Drain Construction
- ☐ Soil Buttress Construction
- ☐ Final Cap Construction
- ☐ River Bank Construction
- ☑ Vegetation
- ☑ Other - Driveable Drainage Channel

Contractor/Subcontractors/Visitors/Alterations/Deliveries:

Contractor(s) - Haynes
Subcontractor(s) - ZAK & Co., KS
Visitor(s) - Rick Isaac, Nate Givens
Phone Call(s) - Rick Isaac
Alteration(s) - N/A
Material Delivered - Green Armor, #57, #411, Flexterra, etc.
Equipment Delivered - N/A

Summary of Work:

- On site.
- Safety mtg.
- Meet w/Dave to discuss the days workplan.
- Haynes continues working on the access rds & the driveable drainage channel, placing #411 & #57, per the specs.
- Zak begins installing green armor in channels C-8, C-7-1, & C-7-2.
- Zak also installs green armor in channels C-1 → C-5 & the downchute.
- Haynes continues working on the access rds & driveable drainage channel.
- KS is onsite to finish the final grade topo.
- Rick Isaac & Nate Givens are onsite to observe status of the project.
- Rick & Nate are offsite.
- KS is offsite.
- Zak is offsite.
- Haynes finishes the access rds & finishes placing aggregate & NetPave 50 in the D.D.C.
- Haynes is offsite.
- I leave the site.

Attachments:

- ☐ Contractor Report
- ☐ Field Notes
- ☐ Other:

Bill Foster — Signature of CQA Monitor

10/17/12 — Date

Brown AND Caldwell

Daily Field Report

Site: Ford Rd.

Project: Phase 2 Remedial Action

Project No: 142889

BC Personnel: Bill Foster

Date: 10/18/12 (Thursday)

Time In: 0700

Time Out: 1200

Weather: 50°-65° overcast/raining

Items Worked On:

- [x] Mobilization/Demobilization storage Box
- [x] Temporary Erosion and Sedimentation Controls Downchute check dam
- [ ] Site Preparation
- [ ] Sedimentation Basin Construction
- [x] Access Road Construction
- [ ] Seep Drain Construction
- [ ] Soil Buttress Construction
- [ ] Final Cap Construction
- [ ] River Bank Construction
- [ ] Vegetation
- [x] Other - Net Pave SO in D.D.C.

Contractor/Subcontractors/Visitors/Alterations/Deliveries:

Contractor(s) - Haynes

Subcontractor(s) - N/A

Visitor(s) - N/A

Phone Call(s) - Rick Isaac

Alteration(s) - N/A

Material Delivered - N/A

Equipment Delivered - N/A

Summary of Work:

- on site.
- safety mtg.
- meet w/Dave to discuss the days workplan.
- Haynes is working on the north access rd, the netpave SO in the DDC, & the downchute check dam.
- Minimobile picks up the storage Trailer.
- Zak & Co are not onsite today, due to the rain that is quickly approaching.
- Haynes fills in a gap in the rip rap, along the river, where a survey control pt was being saved.
- Begins to rain & Haynes is offsite.
- I leave the site

Attachments:

- [ ] Contractor Report
- [ ] Field Notes
- [ ] Other:

Bill Foster 10/18/12

Signature of CQA Monitor Date

Brown AND Caldwell

Daily Field Report

Site:	Ford Rd.	Date:	10/19/12 (Friday)
Project:	Phase 2 Remedial Action	Time In:	0700
Project No:	142889	Time Out:	1900
BC Personnel:	Bill Foster	Weather:	45°-60° cloudy

Items Worked On:

- ☐ Mobilization/Demobilization
- ☐ Temporary Erosion and Sedimentation Controls
- ☐ Site Preparation
- ☐ Sedimentation Basin Construction
- ☑ Access Road Construction
- ☐ Seep Drain Construction
- ☐ Soil Buttress Construction
- ☐ Final Cap Construction
- ☐ River Bank Construction
- ☑ Vegetation
- ☑ Other - finish Final Topo
  - Remove Powerline that went to site trailer.

Contractor/Subcontractors/Visitors/Alterations/Deliveries:

Contractor(s) - Haynes

Subcontractor(s) - [redacted] KS, Zak, Ohio Edison, [redacted] (EPA) (USCB)

Visitor(s) - Bill Frederick, Vanessa Steigerwald, Clarissa Gereby, John, Tony

Phone Call(s) - Rick Isaac

Alteration(s) - N/A

Material Delivered - N/A

Equipment Delivered - N/A

Summary of Work:

- on site
- Safety mtg.
- meet w/Dave to discuss the days workplan.
- Haynes is finishing installing Net Pave 50 grids
- Haynes places topsoil onto and in the voids of the Netpave grids.
- KS is onsite to finish final topo. KS is offsite.
- Ohio Edison is onsite to remove the powerline to the site trailer. They are offsite.
- Zak continues placing green armor in swales + along slope areas under 612 elev
- Bill Frederick is onsite. We walk the site + discuss the project. We put together a "rough" punchlist.
- Vanessa is onsite. We walk the site, take photos, + discuss the project.
- Bill + Vanessa are offsite.
- Clarissa + John are onsite. We walk the site, take photos, + discuss the project
- Clarissa + John are offsite.
- Haynes is offsite.
- Zak is offsite.
- I leave the site.

Attachments:

- ☐ Contractor Report
- ☐ Field Notes
- ☐ Other:

Bill Foster — Signature of CQA Monitor

10/19/12 — Date

Brown AND Caldwell

Daily Field Report

Site:	Ford Rd.	**Date:**	10/20/12 (Saturday)
Project:	Phase 2 Remedial Action	**Time In:**	0700
Project No:	142889	**Time Out:**	1700
BC Personnel:	Bill Foster	**Weather:**	40°-55° Overcast/Ra

Items Worked On:

- ☐ Mobilization/Demobilization
- ☐ Temporary Erosion and Sedimentation Controls
- ☐ Site Preparation
- ☐ Sedimentation Basin Construction
- ☐ Access Road Construction
- ☐ Seep Drain Construction
- ☐ Soil Buttress Construction
- ☐ Final Cap Construction
- ☐ River Bank Construction
- ☑ Vegetation - Green Armor + straw wattle
- ☐ Other -

Contractor/Subcontractors/Visitors/Alterations/Deliveries:

Contractor(s) - N/A
Subcontractor(s) - Zak & Co.
Visitor(s) - N/A
Phone Call(s) - Rich Isaac
Alteration(s) - N/A
Material Delivered - N/A
Equipment Delivered - N/A

Summary of Work:

- on site.
- safety mtg.
- meet w/mine to discuss the days workplan.
- Zak continues installing green armor, in the swales + along the outside slope, below 612 elev.
- Zak continues installing the straw wattle.
- Zak finishes w/ the straw wattle.
- Zak finishes the green armor installation for the day + they are offsite.
- I leave the site.

Attachments:

- ☐ Contractor Report
- ☐ Field Notes
- ☐ Other:

Bill Foster — 10/20/12

Signature of CQA Monitor — Date

Brown AND Caldwell

Daily Field Report

Site:	Ford Rd.	Date:	10/22/12 (Monday)
Project:	Phase 2 Remedial Action	Time In:	0700
Project No:	142889	Time Out:	1900
BC Personnel:	Bill Foster	Weather:	50°-70° Sunny

Items Worked On:

- [x] Mobilization/Demobilization
- [ ] Temporary Erosion and Sedimentation Controls
- [ ] Site Preparation
- [ ] Sedimentation Basin Construction
- [ ] Access Road Construction
- [ ] Seep Drain Construction
- [ ] Soil Buttress Construction
- [ ] Final Cap Construction
- [ ] River Bank Construction
- [x] Vegetation
- [ ] Other -

Contractor/Subcontractors/Visitors/Alterations/Deliveries:

Contractor(s) - Haynes
Subcontractor(s) - Zak, Somers
Visitor(s) - N/A
Phone Call(s) - Rick Isaac
Alteration(s) - N/A
Material Delivered - N/A
Equipment Delivered - N/A

Summary of Work:

- on site.
- safety mtg.
- meet w/Asre to discuss the days workplan.
- Haynes is demobilizing more equipment.
- Site trailer is demobilized by Somers.
- Zak is onsite continuing to deploy green armor matting.
- Zak begins installing Flexterra - HP - F6M.
- Haynes is offsite.
- Zak continues installing green armor - Flexterra + matting.
- Zak is offsite.
- I leave the site

Attachments:

- [ ] Contractor Report
- [ ] Field Notes
- [ ] Other:

Bill Foster — Signature of CQA Monitor — Date: 10/22/12

Brown AND Caldwell

Daily Field Report

Site:	Ford Rd.	Date:	10/23/12 (Tuesday)
Project:	Phase 2 Remedial Action	Time In:	0700
Project No:	142889	Time Out:	1500
BC Personnel:	Bill Foster	Weather:	55°-70° Rain

Items Worked On:

- [x] Mobilization/Demobilization
- [ ] Temporary Erosion and Sedimentation Controls
- [ ] Site Preparation
- [ ] Sedimentation Basin Construction
- [ ] Access Road Construction
- [x] Seep Drain Construction - check valves
- [ ] Soil Buttress Construction
- [ ] Final Cap Construction
- [ ] River Bank Construction
- [x] Vegetation
- [x] Other - weekly Progress mtg

Contractor/Subcontractors/Visitors/Alterations/Deliveries:

Contractor(s) - Haynes
Subcontractor(s) - Zak, Collihan
Visitor(s) - Rich Isaac, Brian Holmes
Phone Call(s) - Rich Isaac
Alteration(s) - N/A
Material Delivered - N/A
Equipment Delivered - N/A

Summary of Work:

- on site.
- meet w/mike to discuss the days workplan.
- Safety mtg.
- Haynes is onsite, Dave, clears off a path for Zak to use to spray Flexterra.
- Haynes is offsite.
- Zak continues installing matting & Flexterra.
- Begins to rain.
- Zak finishes for the day & is offsite.
- Rich Isaac, Dave Miller, Brian Holmes & myself meet @ the parks Dept maintenance shop to have our weekly progress mtg.
- Rich & Brian are offsite.
- Collahan is onsite to remove power pole (to site trailer). Collahan is offsite
- Dave installs check valves on seep drains.
- Dave & I leave the site.

Attachments:

- [ ] Contractor Report
- [ ] Field Notes
- [ ] Other:

Bill Foster 10/23/12

Signature of CQA Monitor — Date

Brown AND Caldwell

Daily Field Report

Site:	Ford Rd.	Date:	10/25/12 (Thursday)
Project:	Phase 2 Remedial Action	Time In:	0700
Project No:	142889	Time Out:	1800
BC Personnel:	Bill Foster, Pete Schlater	Weather:	68°-88° Sunny

Items Worked On:

- ☐ Mobilization/Demobilization
- ☐ Temporary Erosion and Sedimentation Controls
- ☐ Site Preparation
- ☐ Sedimentation Basin Construction
- ☐ Access Road Construction
- ☐ Seep Drain Construction
- ☐ Soil Buttress Construction
- ☐ Final Cap Construction
- ☐ River Bank Construction
- ☑ Vegetation
- ☑ Other - Redevelop wells

Contractor/Subcontractors/Visitors/Alterations/Deliveries:

Contractor(s) - Haynes
Subcontractor(s) - Tdk.
Visitor(s) - Mark Haynes, Joe Montello
Phone Call(s) - Rich Isaac
Alteration(s) - Fertilizer - 7 bags/Ac of 15-30-15 instead of 10-10-10
Material Delivered - N/A
Equipment Delivered - N/A

Summary of Work:

- on site.
- safety mtg.
- meet w/mike to discuss the days workplan.
- Pete Schlater is onsite to redevelop the wells.
- Tdk continues w/Flexterra/Green Armor.
- Mark Haynes is onsite. We mark up Ford Rd, where we believe it was damaged from truck traffic.
- Mark repairs MW-5. It was damaged last week (hit by a smooth driver).
- Mark is offsite.
- Joe Montello is onsite. We walk the site & discuss the project
- Joe is offsite.
- Pete is offsite.
- Tdk finishes for the day & is offsite.
- I leave the site.

Attachments:

- ☐ Contractor Report
- ☐ Field Notes
- ☐ Other:

Bill Foster 10/25/12
Signature of CQA Monitor Date

Brown AND Caldwell

Daily Field Report

Site:	Ford Rd.	Date:	10/26/12 (Friday)
Project:	Phase 2 Remedial Action	Time In:	0700
Project No:	142889	Time Out:	1900
BC Personnel:	Bill Foster, Pete Schlater	Weather:	40°-55° Cloudy

Items Worked On:

- ☐ Mobilization/Demobilization
- ☐ Temporary Erosion and Sedimentation Controls
- ☐ Site Preparation
- ☐ Sedimentation Basin Construction
- ☐ Access Road Construction
- ☐ Seep Drain Construction
- ☐ Soil Buttress Construction
- ☐ Final Cap Construction
- ☐ River Bank Construction
- ☒ Vegetation
- ☒ Other - Redevelop well MW-5

Contractor/Subcontractors/Visitors/Alterations/Deliveries:

Contractor(s) - Haynes
Subcontractor(s) - Zek
Visitor(s) - N/A
Phone Call(s) - Rick Isaac
Alteration(s) - N/A
Material Delivered - N/A
Equipment Delivered - N/A

Summary of Work:

- On site.
- Safety mtg.
- Meet w/ Mike to discuss the days workplan.
- Pete Schlater is onsite to redevelop MW-5.
- Pete finishes w/ MW-5 & is offsite
- Zek continues w/ vegetation.
- Zek vegetates the upper surface & the drivable drainge channel.
- Zek finishes up & is offsite.
- I leave the site.

Attachments:

- ☐ Contractor Report
- ☐ Field Notes
- ☐ Other:

Signature of CQA Monitor: [signature] Date: 10/26/12

Brown AND Caldwell

Daily Field Report

Site:	Ford Rd.	Date:	11/13/12 (Tuesday)
Project:	Phase 2 Remedial Action	Time In:	0900
Project No:	142889	Time Out:	1400
BC Personnel:	Bill Foster, Nate Giovou	Weather:	40°- Cloudy

Items Worked On:

- ☐ Mobilization/Demobilization
- ☐ Temporary Erosion and Sedimentation Controls
- ☐ Site Preparation
- ☐ Sedimentation Basin Construction
- ☐ Access Road Construction
- ☐ Seep Drain Construction
- ☐ Soil Buttress Construction
- ☐ Final Cap Construction
- ☐ River Bank Construction
- ☐ Vegetation
- ☒ Other - Plant willow stakes

Contractor/Subcontractors/Visitors/Alterations/Deliveries:

Contractor(s) - N/A
Subcontractor(s) - N/A
Visitor(s) - N/A
Phone Call(s) - Rich Isaac
Alteration(s) - N/A
Material Delivered - N/A
Equipment Delivered - N/A

Summary of Work:

- On Site
- Safety mtg.
- Nate & I begin planting willow stakes, per Bill Fredericks specs.
- Nate & I finish planting willow stakes.
- Nate & I take photos of the site & willow stakes.
- Nate & I are offsite.

Attachments:

- ☐ Contractor Report
- ☐ Field Notes
- ☐ Other:

BN ZT 11/13/12

Signature of CQA Monitor — Date

Brown AND Caldwell

Daily Field Report

Site:	Ford Rd.	Date:	11/20/12 (Tuesday)
Project:	Phase 2 Remedial Action	Time In:	0700
Project No:	142889	Time Out:	1700
BC Personnel:	Bill Foster	Weather:	45°- 60° Sunny

Items Worked On:

- ☐ Mobilization/Demobilization
- ☐ Temporary Erosion and Sedimentation Controls
- ☐ Site Preparation
- ☐ Sedimentation Basin Construction
- ☐ Access Road Construction
- ☐ Seep Drain Construction
- ☐ Soil Buttress Construction
- ☐ Final Cap Construction
- ☐ River Bank Construction
- ☐ Vegetation
- ☑ Other - Ford Rd Pavement Repair

Contractor/Subcontractors/Visitors/Alterations/Deliveries:

Contractor(s) - N/A
Subcontractor(s) - Precision Paving, Ohio Edison
Visitor(s) - Mark Hayes, City of Elyria Inspector
Phone Call(s) - Rick Isaac, Paul Miller
Alteration(s) - N/A
Material Delivered - N/A
Equipment Delivered - N/A

Summary of Work:

- on site.
- safety mtg.
- meet w/precision Paving to discuss the days workplan.
- I show them the 7 areas that need repaired.
- City of Elyria Inspector is onsite. We discuss the repairs & he leaves the site. He will be back @ the end of the day to check the repairs out.
- Precision Paving repairs the 7 areas by grinding the bad pavement out, replacing w/new pavement, compacting, & Seal coating.
- Precision finishes & is offsite.
- City of Elyria Inspector returns to check on the repairs. He approves
- City of Elyria Inspector is offsite.
- Ohio Edison is onsite to repair a ground wire.
- Ohio Edison finishes & is offsite.
- I leave the site.

Attachments:

- ☐ Contractor Report
- ☐ Field Notes
- ☐ Other:

Bill Foster — Signature of CQA Monitor

11/20/12 — Date

Brown AND Caldwell

Daily Field Report

Site:	Ford Rd.	Date:	01/07/13 (Monday)
Project:	Phase 2 Remedial Action	Time In:	0800
Project No:	142889	Time Out:	1700
BC Personnel:	Bill Foster	Weather:	30° Sunny

Items Worked On:

- ☐ Mobilization/Demobilization
- ☐ Temporary Erosion and Sedimentation Controls
- ☐ Site Preparation
- ☐ Sedimentation Basin Construction
- ☐ Access Road Construction
- ☐ Seep Drain Construction
- ☐ Soil Buttress Construction
- ☐ Final Cap Construction
- ☐ River Bank Construction
- ☐ Vegetation
- ☑ Other - Level Loop to MW 5 + MW 7 - Begin Fence/Gate Installation

Contractor/Subcontractors/Visitors/Alterations/Deliveries:

Contractor(s) - N/A
Subcontractor(s) - Inline Fence
Visitor(s) - Kevin Kirsch (City of Elyria Engineering Dept.)
Phone Call(s) - Rick Isaac
Alteration(s) - N/A
Material Delivered - N/A
Equipment Delivered - N/A

Kevin Kirsch stop by because I called him + wanted him to verify the setback we used from EP was O.K. He verified it is.

Summary of Work

- on site
- Safety mtg.
- Meet w/Matt, from Inline Fence.
- Inline Fence begins installing the fence + gates @ both entrances.
- I run a level loop from MW6 to MW5 + from MW6 to MW7. Both loop close.
- Inline finishes for the day. The posts for the gates + fence are set in concrete. They will be back next Tuesday, 01/15/13, to finish.
- Inline is offsite.
- I leave the site.

Attachments:

- ☐ Contractor Report
- ☐ Field Notes
- ☐ Other:

Signature of CQA Monitor: [signature] Date: 01/07/13

Brown AND Caldwell

Daily Field Report

Site:	Ford Rd.	Date:	06/05/13 (Tuesday)
Project:	Phase 2 Remedial Action	Time In:	0800
Project No:	142889	Time Out:	1700
BC Personnel:	Bill Foster	Weather:	35° - Sunny

Items Worked On:

- ☐ Mobilization/Demobilization
- ☐ Temporary Erosion and Sedimentation Controls
- ☐ Site Preparation
- ☐ Sedimentation Basin Construction
- ☐ Access Road Construction
- ☐ Seep Drain Construction
- ☐ Soil Buttress Construction
- ☐ Final Cap Construction
- ☐ River Bank Construction
- ☐ Vegetation
- ☒ Other - Fence & Gates
  - soil Erosion + Sed. control Inspection

Contractor/Subcontractors/Visitors/Alterations/Deliveries:

Contractor(s) - N/A
Subcontractor(s) - Inline Fence
Visitor(s - N/A
Phone Call(s) - Rich Isaac
Alteration(s) - N/A
Material Delivered - N/A
Equipment Delivered - N/A

Summary of Work:

- on site
- Safety Mtg.
- meet w/ Matt, from Inline Fence.
- Inline continued working on Fence & Gates.
- I do a soil Erosion + sed control Inspection, several areas of the steep slope + drainage swales need addressed.
- I notify Haynes regarding these areas
- Inline Fence finishes w/ the gates + Fence.
- They are offsite
- I leave the site.

Attachments:

- ☐ Contractor Report
- ☐ Field Notes
- ☐ Other:

Bill Foster — Signature of CQA Monitor

06/05/13 — Date

Weekly Progress Meeting Summaries

THIS PAGE INTENTIONALLY LEFT BLANK.

Phase I Remedial Action

THIS PAGE INTENTIONALLY LEFT BLANK.

PHASE 1 REMEDIAL ACTION
FORD ROAD LANDFILL

WEEKLY PROGRESS MEETING MINUTES
AUGUST 30, 2011

The Weekly Progress Meeting began at 2:00 pm on Tuesday, August 30, 2011. The following parties were present:

Joe Montello – PRP Group (via telephone)	Matt Spronz – LCPD (via telephone)
Pat Steerman – PRP Group (via telephone)	Clarissa Gereby – Ohio EPA
Bill Hunter – OP-Tech (via telephone)	Demaree Collier – U.S. EPA (via telephone)
Dan George – OP-Tech	Jim Peeples – Brown and Caldwell (via telephone)
David Curran – OP-Tech	Elena Goodhall – Brown and Caldwell
Joe Naselli – OP-Tech (via telephone)	Rick Isaac – Brown and Caldwell
Bill Fredericks – USACE (via telephone)	Bill Foster – Brown and Caldwell

The meeting was initiated by Elena Goodhall. The following topics were discussed during the meeting:

GENERAL DISCUSSION

- Introductions
- David Curran of OP-TECH will not be onsite next week; Joe Naselli of OP-TECH will be onsite.
- OP-TECH will have a full crew onsite the week of September 12, 2011.
- The Ohio EPA is planning on walking the neighborhood on Thursday, September 1, 2011 to inform the residents of the work being performed; will return on Thursday, September 8, 2011 to talk residents unable to contact on the first visit.
  - Will provide Fact Sheets
- U.S. EPA/Ohio EPA will provide extra copies of the Fact Sheets to Bill Foster of Brown and Caldwell to pass out to visitors.

HEALTH AND SAFETY

- Personal Protective Equipment – High visibility shirt/vest, long pants, hard hat, safety glasses, steel toe boots are now required for all personnel and visitors to the site.
- Tailgate Safety Meetings are being held at the beginning of each workday; Edwards Landscaping participated and provided discussion of clearing hazards.
- No issues, near misses, or accidents to report.

PHASE 1 REMEDIAL ACTION
FORD ROAD LANDFILL

WEEKLY PROGRESS MEETING MINUTES
AUGUST 30, 2011

PROJECT WORK – AUGUST 22, 2011 THROUGH AUGUST 30, 2011 – The following work activities were performed during the past one week plus period:

OP-TECH Mobilization

- 90 percent completed
  - End dump truck and vibratory roller to be delivered
  - Utility hookups to be completed
  - Sanitary facilities to be delivered
- Equipment mobilization.
  - Track-mounted excavator and dozer onsite
  - End dump truck and vibratory roller to be delivered

Temporary facilities

- Office trailer, storage trailer, and electric generator onsite

Contractor Staging Area

- Grading aggregate material
- Modifications to access cable/chain

Construction stakeout.

- Working with clearing subcontractor

Site clearing and tree removal.

- Edwards Landscaping

Staging dense gravel aggregate for south access road construction.

PROJECTED WORK – AUGUST 31, 2011 THROUGH SEPTEMBER 6, 2011 – The following work activities are anticipated to be performed during the next one week period:

- Temporary facilities completion.
- Equipment mobilization completion.
- Pre-construction survey and construction stakeout completed.
- Silt fence material delivered; installation initiated on September 6, 2011.
- Continue site clearing and tree removal.
- Construction/enhancement of south access road preparation– onsite soil material stockpile (dependent on the steep slope fill submittal status).

SUBMITTALS – Submittal status during the past one week plus period:

- Submittal No. 3 (Health and Safety Plan) – Reviewed by Brown and Caldwell.
- Submittal No. 5 (Silt Fence) – No exception taken.
- Submittal No. 6 (8 oz. Non-Woven Geotextile Fabric) – No exception taken.

- The Complaint Form will be e-mailed on a daily basis (or as needed) to Pat Steerman and Demaree Collier.
  - Bill Foster of Brown and Caldwell will call Pat Steerman to discuss who filed a complaint and, if addressed onsite, how the complaint was addressed.
- Visitors will be provided with a Fact Sheet, provided by the U.S. EPA, regarding the construction activities occurring at the site.
  - Brown and Caldwell will take the name(s) and contact information of people who would like additional information and pass this along to Pat Steerman and Demaree Collier.

Progress Photographs.

- A question was raised about submitting a couple photographs of the work progress with the meeting minutes so participants on the telephone could visually see and understand the discussion(s) better.
- Resolution: Brown and Caldwell will provide two to three representative photographs, taken on Friday of Monday, with the meeting minutes.

RESOLUTIONS OF COMMENTS/QUESTIONS/ISSUES/CONCERNS

- Not applicable this week.

PROGRESS PHOTOS

Site clearing looking north from the southeast corner.

- Submittal No. 7 (30-Mil HDPE Membrane) – No exception taken.
- Submittal No. 8 (Ohio #304 Aggregate) – No exception taken.
- Submittal No. 9 (Steep Slope Fill) – Revise and re-submit, resubmittal required.
- Submittal No. 10 (Ohio #57 Aggregate) – No exception taken.
- Submittal No. 11 (Ohio #411 Aggregate) – No exception taken.

PROJECT SCHEDULE:

- Nothing at this point is affecting the overall project schedule.
- Edwards Landscaping to be completed with the site clearing on schedule in two weeks.
- Geotextile material to be delivered to the site on Friday, September 2, 2011.
- OP-TECH will look into overlapping work on the South Access Road with the site clearing; do not think this will possible at this time.
- Long weekend for the Labor Day Holiday; work to resume at 7:00 a.m. on Tuesday, September 6, 2011.
- Excavation activities for the soil removal areas still on track to begin the week of September 26, 2011.

COMPLAINTS RECEIVED

- No complaints were received during the period between the Pre-Construction Meeting and today's meeting.

COMMENTS/QUESTIONS/ISSUES/CONCERNS

Status of the POTW Discharge.

- The POTW will send a representative to inspect the treatment system after OP-TECH has completed the treatment system set-up. The POTW will supply a flow meter for the discharge. Brown and Caldwell will coordinate the treatment system inspection with OP-TECH and the POTW.

Contact Information at the Gate and Office Trailer.

- OP-TECH will post a notice to visitors (sign) at the front gate and at the office trailer that provides visitors with a phone number to call to access the site.
- The sign will also indicate that all visitors must register at the office trailer and be escorted.

How to Handle Complaints.

- Brown and Caldwell will develop a Complaint Form to be filled out for each complaint received at the site. The Complaint Forms will be kept onsite in the office trailer.

PHASE 1 REMEDIAL ACTION
FORD ROAD LANDFILL

WEEKLY PROGRESS MEETING MINUTES
AUGUST 30, 2011

Site clearing along the east side west of the Black River looking north.

Site clearing at the base of the South Access Road.

NEXT WEEKLY PROGRESS MEETING

The next Weekly Progress Meeting will be on Tuesday, September 6, 2011 at 2:00 pm at the site trailer.

PHASE 1 REMEDIAL ACTION
FORD ROAD LANDFILL

WEEKLY PROGRESS MEETING MINUTES
AUGUST 30, 2011

For those who need to attend remotely, please use the following call in information:

Telephone Number: NON-RESPONSIVE
Password: [redacted]

PHASE 1 REMEDIAL ACTION
FORD ROAD LANDFILL

WEEKLY PROGRESS MEETING MINUTES
SEPTEMBER 6, 2011

The Weekly Progress Meeting began at 2:00 pm on Tuesday, September 6, 2011. The following parties were present:

Pat Steerman – PRP Group (via telephone)
Bill Hunter – OP-TECH (via telephone)
Joe Naselli – OP-TECH
Demaree Collier – U.S. EPA (via telephone)
Clarissa Gereby – Ohio EPA
Vanessa Steigerwald-Dick – Ohio EPA
Jim Peeples – Brown and Caldwell (via telephone)
Elena Goodhall–Brown and Caldwell (via telephone)
Rick Isaac – Brown and Caldwell
Bill Foster – Brown and Caldwell
Pete Schlater – Brown and Caldwell

The meeting was initiated by Elena Goodhall. The following topics were discussed during the meeting:

GENERAL DISCUSSION

- OP-TECH anticipates having telephone service to the site trailer by the next Weekly Progress Meeting.
- Vanessa Steigerwald-Dick and Clarissa Gereby of the Ohio EPA visited area residents located along Ford Road and Regency Court on Tuesday, September 6, 2011 to inform the residents of the work being performed. The Ohio EPA spoke with 11 of 17 residents, and left the "Fact Sheet" where no one was home.
  - Residents were happy to be contacted; no significant concerns reported at his time.
- Ohio EPA provided extra copies of the Fact Sheets to Bill Foster of Brown and Caldwell to pass out to visitors.
- The USACOE (Bill Frederick) will be onsite during the performance of the soil removal from both the South and North Soil Removal Areas.
- Demaree Collier of the U.S. EPA is planning on being at the site on September 29 and September 30, 2011.

HEALTH AND SAFETY

- No issues, near misses, or accidents to report.

PROJECT WORK – AUGUST 31, 2011 THROUGH SEPTEMBER 6, 2011 – The following work activities were performed during the past one week period:

OP-TECH Mobilization

- End dump truck , vibratory roller, and a skid steer delivered
- Sanitary facilities delivered
- Anticipating telephone service by next week

PHASE 1 REMEDIAL ACTION
FORD ROAD LANDFILL

WEEKLY PROGRESS MEETING MINUTES
SEPTEMBER 6, 2011

Contractor Staging Area

- Grading aggregate material

Pre-construction topography and construction stakeout 90 percent complete.

Site clearing, tree removal, stump grinding was completed.

- Subcontractor preparing to demobilize equipment from the site.

Driller Mobilization

- TTL Associates, Inc. (TTL) of Toledo, Ohio onsite to perform well abandonment of designated groundwater monitoring wells.
- Peter Schlater of Brown and Caldwell will provide oversight of the well abandonment.

<u>PROJECTED WORK – SEPTEMBER 7, 2011 THROUGH SEPTEMBER 13, 2011</u> – The following work activities are anticipated to be performed during the next one week period:

- Abandon seven groundwater monitoring wells by TTL.
- Silt fence installation.
- Enhancement of construction entrance.
- Construct the dewatering system.
- Construction/enhancement of south access road/Sedimentation Basin berm (dependent on the steep slope fill submittal status).

<u>SUBMITTALS</u> – Submittal status during the past one week period:

- Submittal No. 9 (Steep Slope Fill) – Waiting for re-submittal following receipt of geotechnical laboratory results anticipated to be on September 6 or September 7, 2011.
- Submittal No. 15 (Low Permeability Soil) – Revise and re-submit, re-submittal required.
  - The strength tests are currently being performed with the results available the week of September 12, 2011.

<u>PROJECT SCHEDULE</u>:

- Nothing at this point is affecting the overall project schedule.
- Site clearing was completed ahead of schedule.
- OP-TECH is looking into moving up the installation of the slurry wall at the North Soil Removal Area by the end of the week of September 12, 2011.
- Excavation activities for the soil removal areas still on track to begin the week of September 26, 2011.

PHASE 1 REMEDIAL ACTION
FORD ROAD LANDFILL

WEEKLY PROGRESS MEETING MINUTES
SEPTEMBER 6, 2011

COMPLAINTS RECEIVED

- A few people slowed down and asked what was happening; asked to come back the following week if they would like to have a Fact Sheet.
  - Demaree Collier of the U.S. EPA indicated that Fact Sheets were sent to the Park District; contact with the Park District will be made (Brian Holmes) to obtain the Fact Sheets.
- No complaints were received during the past one week period.

COMMENTS/QUESTIONS/ISSUES/CONCERNS

Construction Entrance: A comment was made regarding the construction entrance from Ford Road and the need to add additional aggregate material.

Response: OP-TECH will add additional washed stone i.e. Ohio No. 304.

Low Area near Sedimentation Basin Drainage: OP-TECH indicated that surface water is draining from the south to the bottom of the South Access Road and into the area where the Sedimentation Basin berm will be constructed. This is causing problems with trying to dry this area up to begin construction. OP-TECH proposed installing a temporary diversion ditch/channel to the south of this area to divert the surface water away from the work area.

Response: The U.S. EPA indicated that the diversion ditch/channel could be installed as a temporary remedy with the water being diverted to discharge as overland flow.

Soil Removal Area Excavation Sequencing: A question was asked about the sequence of the soil removal activities starting with the South Soil Removal Area first instead of the North Soil Removal Area. Further discussion determined a concern with cross-contamination of the Dewatering Pad.

Response: OP-TECH indicated that they will perform the excavation associated with the North Soil Removal Area first followed by the South Soil Removal Area due to the need to complete the North Soil Removal Area as soon as possible to "beat" the potential issues related to weather in late October and November and not wanting to drive across a previously excavated area.

OP-TECH will handle the potential cross-contamination issue by placing a couple layers of 6-mil polyethylene sheeting over the geomembrane in the Dewatering Pad. Following completion of the North Soil Removal Area dewatering activities, the plastic will be removed and placed in the onsite Lower Placement Area. The Dewatering Pad can then be used for the excavated soil from the South Soil Removal Area without contact from previously excavated soil from the North Soil Removal Area.

Upper Surface Material Staging Area: A question was asked regarding how the soil material from the South or North Soil Removal Areas would be handled in the Upper Surface Material Staging Area with emphasis on cross-contamination.

Response: OP-TECH indicated that three distinct areas will be constructed for each of the following:

- One area for the north soil material that is visibly contaminated.
- One area for the north soil material that the contamination is questionable.
- One area for the south soil material that is contaminated.

Each separate staging area will have a perimeter soil berm constructed with polyethylene sheeting lining and covered with a tarp.

Further discussion involved the timing of sampling the soil materials, when off-site removal would occur, if any, and the potential issues related to TSCA and how TSCA relates to CERCLA. These potential issues will be reviewed and addressed before any excavation activities are performed at the South or North Soil Removal Area.

RESOLUTIONS OF COMMENTS/QUESTIONS/ISSUES/CONCERNS

Status of the POTW Discharge: Resolved.

Status of the Contact Information at the Gate and Office Trailer.

OP-TECH posted a "Visitors Must Register at the Office" sign at the front gate and at the office trailer that provides visitors with a telephone number to call to access the site and informs them that they must be escorted while onsite. Resolved.

How to Handle Complaints.

Brown and Caldwell developed a Complaint Form to be filled out for each complaint received at the site. The Complaint Forms are kept onsite in the office trailer.

Chain of Command Reporting

Issues or questions in the field to be addressed by Bill Frederick of the USACOE

- Bill Frederick will call Demaree Collier of the U.S. EPA, as required.

Chain of Command for Community Service

Demaree Collier and/or Patricia Krause of the U.S. EPA are to be contacted directly.

- The Ohio EPA will serve as the secondary contact.
- Demaree Collier will determine who else to get involved.

Progress Photographs: Resolved.

PHASE 1 REMEDIAL ACTION
FORD ROAD LANDFILL

WEEKLY PROGRESS MEETING MINUTES
SEPTEMBER 6, 2011

PROGRESS PHOTOS

Construction Entrance.

Silt fence along the east side west of the Black River looking south.

Brown AND Caldwell

Silt fence at the base of the South Access Road.

NEXT WEEKLY PROGRESS MEETING

The next Weekly Progress Meeting will be on Tuesday, September 13, 2011 at 2:00 pm at the site trailer.

For those who need to attend remotely, please use the following call in information:

Telephone Number: NON-RESPONSIVE
Password: [redacted]

PHASE 1 REMEDIAL ACTION
FORD ROAD LANDFILL

WEEKLY PROGRESS MEETING MINUTES
SEPTEMBER 13, 2011

The Weekly Progress Meeting began at 2:00 pm on Tuesday, September 13, 2011. The following parties were present:

Pat Steerman – PRP Group (via telephone)	Fred Boglione – USACE (via telephone)
Joe Montello – PRP Group	Vanessa Steigerwald – Ohio EPA (via telephone)
Bill Hunter – OP-TECH (via telephone)	Brian Holmes - LCMPD
Dan George – OP-TECH (via telephone)	Matt Spronz – LCMPD (via telephone)
Joe Naselli – OP-TECH (via telephone)	Jim Peeples – Brown and Caldwell (via telephone)
Dave Curran – OP-TECH	Elena Goodhall–Brown and Caldwell
Demaree Collier – U.S. EPA (via telephone)	Rick Isaac – Brown and Caldwell (via telephone)
Clarissa Gereby – Ohio EPA (via telephone)	Bill Foster – Brown and Caldwell

The meeting was initiated by Elena Goodhall. The following topics were discussed during the meeting:

GENERAL DISCUSSION

- OP-TECH anticipates having telephone service to the site trailer this week.
- The USACOE (Bill Frederick) will be onsite during the performance of the soil removal from both the South and North Soil Removal Areas.
- Demaree Collier of the U.S. EPA is planning on being at the site on September 29 and September 30, 2011.

HEALTH AND SAFETY

- Near miss – The silt fence subcontractor was tracking their mini excavator down the South Access Road and slid the last 10-20 feet to the bottom of the slope.
- Two OP-TECH health and safety officers were onsite September 12, 2011.

PROJECT WORK – SEPTEMBER 7, 2011 THROUGH SEPTEMBER 13, 2011 – The following work activities were performed during the past one week period:

- Seven groundwater monitoring wells were abandoned by TTL.
- Silt fence installation is completed.
- Construction entrance is completed.
- Construction of South Access Road/Sedimentation Basin berm continued.
- Two Baker tanks (20,000-gallon capacity) and pumps, hoses, and miscellaneous materials delivered.

PHASE 1 REMEDIAL ACTION
FORD ROAD LANDFILL

WEEKLY PROGRESS MEETING MINUTES
SEPTEMBER 13, 2011

Contractor Staging Area

- Grading aggregate material.
- Receiving and stockpiling steep slope fill to use on the South Access Road/Sedimentation Basin berm.
- Receiving and stockpiling sand material.
- Notification signs are up at the site entrance and office trailer.

PROJECTED WORK – SEPTEMBER 14, 2011 THROUGH SEPTEMBER 20, 2011 – The following work activities are anticipated to be performed during the next one week period:

- Set up the onsite water treatment facility and call the Elyria WWTP to set-up the inspection.
- Construct the lower dewatering system including the dewatering pad, sump, and pump(s).
- Construct the Upper Surface Staging Area.
- Continue construction of South Access Road/Sedimentation Basin berm.
- Begin construction of the slurry wall at the North Soil Removal Area.
  - Slurry wall construction anticipated to take 3 to 4 days.
  - Soil material that is unaffected will be placed in the Lower Placement Area with affected soil material taken to the Upper Surface Staging Area.

SUBMITTALS – Submittal status during the past one week period:

- Submittal No. 9 (Steep Slope Fill) – Waiting for re-submittal following receipt of geotechnical laboratory results.
  - The Atterberg limits and the strength tests are currently being performed with the results available by the end of this week.
- Submittal No. 15 (Low Permeability Soil) – Waiting for re-submittal following receipt of geotechnical laboratory results.
  - The strength tests are currently being performed with the results available the week of September 19, 2011.
- Submittal No. 4 (Slurry Wall Work Plan) – Revise and re-submit, re-submittal required.

PROJECT SCHEDULE:

- Nothing at this point is affecting the overall project schedule.
- Excavation activities for the soil removal areas still on track to begin the week of September 26, 2011.

PHASE 1 REMEDIAL ACTION
FORD ROAD LANDFILL

WEEKLY PROGRESS MEETING MINUTES
SEPTEMBER 13, 2011

COMPLAINTS RECEIVED

- No complaints were received during the past one week period from the neighbors or others; two people stopped by the site entrance and inquired about what was going on.
- The Ohio Parks and Recreation expressed a concern regarding the manner in which the soil material trucks were turning around in the driveway – site personnel talked to the truck drivers to alleviate the concern.
- Vanessa Steigerwald-Dick of the Ohio EPA was onsite on Monday, September 12, 2011. The silt fence and construction entrance looked good. The Ohio EPA has received two telephone calls that were positive with no concerns.

COMMENTS/QUESTIONS/ISSUES/CONCERNS

There were no comments/questions/issues/concerns at this time.

RESOLUTIONS OF COMMENTS/QUESTIONS/ISSUES/CONCERNS

Construction Entrance: Resolved.

Low Area near Sedimentation Basin Drainage: Resolved.

Soil Removal Area Excavation Sequencing: Resolved.

Upper Surface Material Staging Area: Construction/installation of the Upper Surface Staging Area was resolved; further discussion involved the timing of sampling the soil materials, when off-site removal would occur, if any, and the potential issues related to TSCA and how TSCA relates to CERCLA. These potential issues will be reviewed and addressed before any excavation activities are performed at the South or North Soil Removal Area.

PHASE 1 REMEDIAL ACTION
FORD ROAD LANDFILL

WEEKLY PROGRESS MEETING MINUTES
SEPTEMBER 13, 2011

PROGRESS PHOTOS

South Access Road and Sedimentation Basin berm construction.

Upper Surface Staging Area.

Brown AND Caldwell

PHASE 1 REMEDIAL ACTION
FORD ROAD LANDFILL

WEEKLY PROGRESS MEETING MINUTES
SEPTEMBER 13, 2011

Lower Area dewatering pad.

NEXT WEEKLY PROGRESS MEETING

The next Weekly Progress Meeting will be on Tuesday, September 20, 2011 at 2:00 pm at the site trailer.

For those who need to attend remotely, please use the following call in information:

Telephone Number: NON-RESPONSIVE
Password: [redacted]

- Set up equipment on Friday, September 16, 2011.
- Initiated slurry wall installation on Monday, September 19, 2011 with the "north" leg.
- Working on the west side progressing to the south.
- Anticipate completed the slurry wall on Wednesday, September 21, 2011.

- Contractor Staging Area
  - Received and stockpiled aggregate material.
  - Received and stockpiled steep slope fill.
  - Received and stockpiled sand material.

PROJECTED WORK – SEPTEMBER 21, 2011 THROUGH SEPTEMBER 27, 2011 – The following work activities are anticipated to be performed during the next one week period:

- Continue construction of South Access Road/Sedimentation Basin berm.
  - Due to the soil conditions resulting from the material wetness and weather, OP-TECH will look into ways to stabilize the underlying soil material for long-term usability of the road.
- Work on setting up and installation of the super sack sand bag river side barrier.

SUBMITTALS – Submittal status during the past one week period:

- Submittal No. 4 (Slurry Wall Work Plan) – No exception taken.
- Submittal No. 9 (Steep Slope Fill) – OP-TECH provided additional information as requested; Brown and Caldwell to review.
- Submittal No. 15 (Low Permeability Soil) – Waiting for re-submittal following receipt of geotechnical laboratory results.
  - The strength tests are currently being performed with the results available the week of September 26, 2011.

PROJECT SCHEDULE:

- Excavation activities for the soil removal areas have been pushed back with an anticipated start date of October 3, 2011.
- This delay is due to weather (rain) and the condition of the soil material (wetness) at the bottom of the South Access Road. The rain makes the conditions at the lower area sloppy and enhances the poor conditions of the soil material associated with the South Access Road.
- OP-TECH indicated that the schedule is still to be completed with the North Soil Removal Area by October 28, 2011.
- Schedule will not affect Bill Frederick of the USACE; Bill may make a day trip on September 29 or September 30 and be back on October 3, 2011 for the soil removal.

PHASE 1 REMEDIAL ACTION
FORD ROAD LANDFILL

WEEKLY PROGRESS MEETING MINUTES
SEPTEMBER 20, 2011

The Weekly Progress Meeting began at 2:00 pm on Tuesday, September 20, 2011. The following parties were present:

Pat Steerman – PRP Group (via telephone)
Joe Montello – PRP Group (via telephone)
Dan George – OP-TECH (via telephone)
Joe Naselli – OP-TECH (via telephone)
Dave Curran – OP-TECH
Demaree Collier – U.S. EPA (via telephone)
Clarissa Gereby – Ohio EPA
Vanessa Steigerwald-Dick – Ohio EPA (via telephone)
Bill Frederick – USACE
Jim Peeples – Brown and Caldwell (via telephone)
Elena Goodhall–Brown and Caldwell
Rick Isaac – Brown and Caldwell (via telephone)
Bill Foster – Brown and Caldwell

The meeting was initiated by Elena Goodhall. The following topics were discussed during the meeting:

GENERAL DISCUSSION

- Bill Frederick of the USACOE will be onsite either September 29 or September 30, and during the performance of the soil removal from both the North and South Soil Removal Areas anticipated to begin on October 3, 2011.
- Demaree Collier of the U.S. EPA will be onsite for two days during the performance of the soil removal from North Soil Removal Area.

HEALTH AND SAFETY

- Near miss – While placing plastic in the Upper Surface Area material staging areas, one OP-TECH employee was knocked over when wind uplifted the plastic that he was holding.
- Slurry wall installation monitoring going well.

PROJECT WORK – SEPTEMBER 14, 2011 THROUGH SEPTEMBER 20, 2011 – The following work activities were performed during the past one week period:

- Set up the onsite water treatment facility.
  - Inspected by the Elyria WWTP including the hydrant and backflow preventer with no issues.
- Constructed/installed the lower dewatering system including the dewatering pad, sump, and pump(s).
- Constructed the Upper Surface Staging Area for the North Soil Removal.
- Continued construction of South Access Road/Sedimentation Basin berm.
  - Used ODOT No. 304 stone material to aid with the road base.
  - Weather/material wetness causing issues with the soil compaction
- Began construction of the slurry wall at the North Soil Removal Area.

PHASE 1 REMEDIAL ACTION
FORD ROAD LANDFILL

WEEKLY PROGRESS MEETING MINUTES
SEPTEMBER 20, 2011

COMPLAINTS RECEIVED

City of Elyria, City Engineer: Brown and Caldwell received an e-mail from the City of Elyria City Engineer regarding a complaint of dump trucks turning around on Regency Court. Dave Curran discussed the complaint with the trucking company, Kurtz Brothers, and they assured Dave that it would not happen again. If trucks are seen turning on Regency Court in the future, the driver number will be obtained and reported to Kurtz Brothers; any driver so identified will no longer be allowed to deliver to the site. The drivers will be reminded and directed to turn around at the Parks department maintenance area.

Further discussion included Pat Steerman indicating that he would also contact Kurtz Brothers. Pat also indicated he does not think that the PRP Group or Brown and Caldwell has any legal standing to have the trucks stop traveling on Regency Court. There may need to be contact with the City of Elyria to see if the police can patrol this area and issue tickets to drivers who use Regency Court to turn around in addition to discussions with Kurtz Brothers and observation by site personnel.

Demaree Collier of the U.S. EPA indicated that she wants to be notified if this issue happens again and she will contact the City of Elyria.

Ohio EPA Director's Office: The Ohio EPA Director's Office received a contact from an individual, not in the area of the Ford Road site, who read about the cleanup work being performed and asked why all the contamination was not being "taken away." The Ohio EPA sent a Fact Sheet to this individual.

COMMENTS/QUESTIONS/ISSUES/CONCERNS

There were no comments/questions/issues/concerns at this time.

RESOLUTIONS OF COMMENTS/QUESTIONS/ISSUES/CONCERNS

Upper Surface Material Staging Area: Construction/installation of the Upper Surface Staging Area was resolved; further discussion involved the timing of sampling the soil materials, when off-site removal would occur, if any, and the potential issues related to TSCA and how TSCA relates to CERCLA. These potential issues will be reviewed and addressed before any excavation activities are performed at the South or North Soil Removal Area.

NEXT WEEKLY PROGRESS MEETING

The next Weekly Progress Meeting will be on Tuesday, September 27, 2011 at 2:00 pm at the site trailer.

For those who need to attend remotely, please use the following call in information:

Telephone Number: NON-RESPONSIVE
Password: [redacted]

Brown AND Caldwell

PHASE 1 REMEDIAL ACTION
FORD ROAD LANDFILL

WEEKLY PROGRESS MEETING MINUTES
SEPTEMBER 20, 2011

PROGRESS PHOTOS

Lower Area Dewatering Pad.

Caution tape around the slurry wall excavation at the end of the day – Looking north to south.

PHASE 1 REMEDIAL ACTION
FORD ROAD LANDFILL

WEEKLY PROGRESS MEETING MINUTES
SEPTEMBER 20, 2011

Upper Surface Staging Area.

PHASE 1 REMEDIAL ACTION
FORD ROAD LANDFILL

WEEKLY PROGRESS MEETING MINUTES
SEPTEMBER 27, 2011

The Weekly Progress Meeting began at 2:00 pm on Tuesday, September 27, 2011. The following parties were present:

Pat Steerman – PRP Group (via telephone)
Joe Montello – PRP Group (via telephone)
Dan George – OP-Tech (via telephone)
Joe Naselli – OP-Tech (via telephone)
Bill Hunter – OP-Tech (via telephone)
Dave Curran – OP-Tech
Demaree Collier – U.S. EPA (via telephone)
Clarissa Gereby – Ohio EPA
Vanessa Steigerwald-Dick – Ohio EPA (via telephone)
Bill Frederick – USACE (via telephone)
Matt Spronz - LCMP
Jim Peeples – Brown and Caldwell (via telephone)
Rick Isaac – Brown and Caldwell
Bill Foster – Brown and Caldwell

The meeting was initiated by Rick Isaac. The following topics were discussed during the meeting:

GENERAL DISCUSSION

- Bill Frederick of the USACE will be onsite either September 29 or September 30, and during the performance of the soil removal from both the North and South Soil Removal Areas.
- Demaree Collier of the U.S. EPA will be onsite for two days during the performance of the soil removal from the North Soil Removal Area.
- Pat Steerman of the PRP Group will be onsite for two days during the performance of the soil removal from the North Soil Removal Area.

HEALTH AND SAFETY

- No issues, near misses, or accidents to report.

PROJECT WORK – SEPTEMBER 21, 2011 THROUGH SEPTEMBER 27, 2011 – The following work activities were performed during the past one week period:

- Completed construction of the slurry wall at the North Soil Removal Area.
  - Slurry wall contractor demobilized off-site on Thursday, September 29, 2011.
- Initiated filling super sack sand bags.
- Daily pumping of bleed/surface water from slurry wall.

PROJECTED WORK – SEPTEMBER 28, 2011 THROUGH OCTOBER 4, 2011 – The following work activities are anticipated to be performed during the next one week period:

- Daily pumping of bleed/surface water from slurry wall.
- Continue filling super sack sand bags.

PHASE 1 REMEDIAL ACTION
FORD ROAD LANDFILL

WEEKLY PROGRESS MEETING MINUTES
SEPTEMBER 27, 2011

SUBMITTALS – Submittal status during the past one week period:

- Submittal No. 9 (Steep Slope Fill) – Returned "No Exception Taken."
- Submittal No. 15 (Low Permeability Soil) – Waiting for re-submittal following receipt of soil material strength test results.

PROJECT SCHEDULE:

Excavation activities for the soil removal areas have been pushed back, due to weather, and are expected to begin the week of October 10, 2011.

The conditions of the site, based on the rain, has made access to the soil removal areas difficult to not possible until the site dries out and the road can be constructed through the Sedimentation Basin area to the soil removal area. Brown and Caldwell and OP-TECH will be working on a plan to get this road constructed based on the site conditions and weather.

OP-TECH was asked to look at the Project Schedule and revise based on the delays due to weather and related site conditions.

COMPLAINTS RECEIVED

No complaints were received during the past one week period.

COMMENTS/QUESTIONS/ISSUES/CONCERNS

Control of the Bleed/Surface Water at the Slurry Wall: A comment was made regarding the "sheen" mixing with the bleed/surface water of the slurry wall and potentially migrating to the Black River.

Response: OP-TECH performed the following activities at the slurry wall:

- Installed a berm, approximately two feet in height, at the end of each wing (north and south) of the slurry wall,
- Created a "sump" (small depression to allow a pump to be positioned) at the end of each wing wall (north and south).
- Each sump is lined with absorbent socks to provide additional protection to keep the potential sheen from migrating to the Black River.
- The bleed/surface water is pumped from these sumps, as needed and periodically throughout the day.
  - The water from the sumps is pumped into a poly tank at the slurry wall and then to the Frac tank located in the Upper Surface Area of the site.

Seeding Between the Silt Fence and the Top of the River Bank: A comment was made regarding the schedule for seeding between the top of the river bank and the silt fence.

Response: OP-TECH will seed this area as soon as construction in this area is completed.

Slurry wall beginning to harden.

Absorbent sock used at slurry wall.

PHASE 1 REMEDIAL ACTION
FORD ROAD LANDFILL

WEEKLY PROGRESS MEETING MINUTES
SEPTEMBER 27, 2011

RESOLUTIONS OF COMMENTS/QUESTIONS/ISSUES/CONCERNS

Upper Surface Material Staging Area: Construction/installation of the Upper Surface Staging Area was resolved; further discussion involved the timing of sampling the soil materials, when off-site removal would occur, if any, and the potential issues related to TSCA and how TSCA relates to CERCLA. These potential issues will be reviewed and addressed before any excavation activities are performed at the South or North Soil Removal Area.

NEXT WEEKLY PROGRESS MEETING

The next Weekly Progress Meeting will be on Tuesday, October 4, 2011 at 2:00 pm at the site trailer.

For those who need to attend remotely, please use the following call in information:

Telephone Number: NON-RESPONSIVE
Password: [redacted]

PROGRESS PHOTOS

Sand bar at the North Soil Removal Area.

PHASE 1 REMEDIAL ACTION
FORD ROAD LANDFILL

WEEKLY PROGRESS MEETING MINUTES
OCTOBER 4, 2011

The Weekly Progress Meeting began at 2:00 pm on Tuesday, October 4, 2011. The following parties were present:

Joe Montello – PRP Group (via telephone)
Dan George – OP-Tech (via telephone)
Joe Naselli – OP-Tech (via telephone)
Bill Hunter – OP-Tech (via telephone)
Dave Curran – OP-Tech
Demaree Collier – U.S. EPA (via telephone)
Clarissa Gereby – Ohio EPA (via telephone)
Bill Frederick – USACE (via telephone)
Matt Spronz – LCMP (via telephone)
Elena Goodhall – Brown and Caldwell (via telephone)
Rick Isaac – Brown and Caldwell (via telephone)
Bill Foster – Brown and Caldwell

The meeting was initiated by Rick Isaac. The following topics were discussed during the meeting:

GENERAL DISCUSSION

- Bill Frederick of the USACE will be onsite during the performance of the soil removal from both the North and South Soil Removal Areas.
- Demaree Collier of the U.S. EPA will be onsite for two days during the performance of the soil removal from the North Soil Removal Area; projected to be October 20 and October 21.
- Pat Steerman of the PRP Group will be onsite for two days during the performance of the soil removal from the North Soil Removal Area; projected to be October 20 and October 21.

HEALTH AND SAFETY

- No issues, near misses, or accidents to report.

PROJECT WORK – SEPTEMBER 28, 2011 THROUGH OCTOBER 4, 2011 – The following work activities were performed during the past one week period:

- Continued filling super sack sand bags.
- Installed a berm, approximately two feet in height, at the end of each wing (north and south) of the slurry wall,
- Created a "sump" (small depression to allow a pump to be positioned) at the end of each wing wall (north and south).
- Each sump is lined with absorbent socks to provide additional protection to keep the potential sheen from migrating to the Black River.
- The bleed/surface water is pumped from these sumps, as needed and periodically throughout the day.

  - The water from the sumps is pumped into a poly tank at the slurry wall and then to the Frac tank located in the Upper Surface Area of the site.
- Repaired silt fence and general site maintenance.
- Cut additional temporary drainage channels and installed straw bales.
- Worked on access road to the soil removal areas.

PROJECTED WORK – OCTOBER 5, 2011 THROUGH OCTOBER 11, 2011 – The following work activities are anticipated to be performed during the next one week period:

- Daily pumping of bleed/surface water from slurry wall.
- Continue filling super sack sand bags.
- Access road construction.
  - Material delivery - Stone.
- Temporary drainage of water from access road.

SUBMITTALS – Submittal status during the past one week period:

- Submittal No. 15 (Low Permeability Soil) – Waiting for re-submittal following receipt of soil material strength test results.

PROJECT SCHEDULE:

Excavation activities for the soil removal areas have been pushed back, due to weather, and are expected to begin the week of October 17, 2011.

COMPLAINTS RECEIVED

No complaints were received during the past one week period.

COMMENTS/QUESTIONS/ISSUES/CONCERNS

Water Pumped from Slurry Wall: A question was asked about the volume of bleed/surface water pumped to date from the slurry wall.

Response: Approximately 1,000 gallons have been pumped to the poly tank and then into the Frac tank.

RESOLUTIONS OF COMMENTS/QUESTIONS/ISSUES/CONCERNS

Upper Surface Material Staging Area: Construction/installation of the Upper Surface Staging Area was resolved; further discussion involved the timing of sampling the soil materials, when off-site removal would occur, if any, and the potential issues related to TSCA and how TSCA relates to CERCLA. These potential issues will be reviewed and addressed before any excavation activities are performed at the South or North Soil Removal Area.

PHASE 1 REMEDIAL ACTION
FORD ROAD LANDFILL

WEEKLY PROGRESS MEETING MINUTES
OCTOBER 4, 2011

NEXT WEEKLY PROGRESS MEETING

The next Weekly Progress Meeting will be on Tuesday, October 11, 2011 at 2:00 pm at the site trailer.

For those who need to attend remotely, please use the following call in information:

Telephone Number: NON-RESPONSIVE
Password: [redacted]

PROGRESS PHOTOS

Access Road/Sedimentation Basin – Looking East

PHASE 1 REMEDIAL ACTION
FORD ROAD LANDFILL

WEEKLY PROGRESS MEETING MINUTES
OCTOBER 4, 2011

Access Road/Sedimentation Basin – Looking Southwest

Access Road prior to placement of stone – Looking Southwest.

PHASE 1 REMEDIAL ACTION
FORD ROAD LANDFILL

WEEKLY PROGRESS MEETING MINUTES
OCTOBER 4, 2011

Access Road with stone – Looking South.

Access Road with stone – Looking North.

PHASE 1 REMEDIAL ACTION
FORD ROAD LANDFILL

WEEKLY PROGRESS MEETING MINUTES
OCTOBER 11, 2011

The Weekly Progress Meeting began at 2:00 pm on Tuesday, October 11, 2011. The following parties were present:

Pat Steerman – PRP Group (via telephone)
Joe Montello – PRP Group
Dan George – OP-Tech (via telephone)
Joe Naselli – OP-Tech (via telephone)
Dave Curran – OP-Tech
Demaree Collier – U.S. EPA (via telephone)
Clarissa Gereby – Ohio EPA
Bill Frederick – USACE (via telephone)
Matt Spronz – LCMP (via telephone)
Elena Goodhall – Brown and Caldwell
Jim Peeples – Brown and Caldwell (via telephone)
Rick Isaac – Brown and Caldwell (via telephone)
Bill Foster – Brown and Caldwell

The meeting was initiated by Elena Goodhall. The following topics were discussed during the meeting:

GENERAL DISCUSSION

- Bill Frederick of the USACE will be onsite during the performance of the soil removal from both the North and South Soil Removal Areas.
- Demaree Collier of the U.S. EPA will be onsite for two days during the performance of the soil removal from the North Soil Removal Area; projected to be October 20 and October 21.
- Pat Steerman of the PRP Group will be onsite for two days during the performance of the soil removal from the North Soil Removal Area; projected to be October 20 and October 21.

HEALTH AND SAFETY

- Near miss – Operator hit a stump with the excavator and bent the tail light bracket.

PROJECT WORK – OCTOBER 5, 2011 THROUGH OCTOBER 11, 2011 – The following work activities were performed during the past one week period:

- Continued filling super sack sand bags.
- Slurry wall maintenance.
- Clearing of additional trees.
- Temporary erosion and sediment control maintenance.
- Worked on access road to the soil removal areas.
- Material delivery – stone and sand.
- Began to stage/install super sack sand bags at the North Soil Removal Area.

PHASE 1 REMEDIAL ACTION
FORD ROAD LANDFILL

WEEKLY PROGRESS MEETING MINUTES
OCTOBER 11, 2011

PROJECTED WORK – OCTOBER 12, 2011 THROUGH OCTOBER 18, 2011 – The following work activities are anticipated to be performed during the next one week period:

- Slurry wall maintenance.
- Finish filling super sack sand bags.
- Finish staging/installing super sack sand bags.
- Access road maintenance.
- Temporary erosion and sediment control maintenance.
- Material delivery – Low permeability soil.
- Construct one more Upper Surface staging area.
- Begin excavating the North Soil Removal Area.

SUBMITTALS – Submittal status during the past one week period:

- Submittal No. 15 (Low Permeability Soil) – No exception taken.

PROJECT SCHEDULE:

Excavation activities for the North Soil Removal Area are anticipated to begin on Monday, October 17, 2011 depending on weather (rain). Brown and Caldwell and OP-TECH will monitor the weather and site conditions and notify the project team by Friday, October 14, 2011 if any changes in this schedule are necessary.

COMPLAINTS RECEIVED

No complaints were received during the past one week period.

COMMENTS/QUESTIONS/ISSUES/CONCERNS

Soil Removal/Screening Protocol: A question was asked regarding the how the soil removed from the North Soil Removal Area would be screened to determine if the soil remained in the Lower Soil Placement Area or would to transported to the Upper Surface staging area.

Response: The screening/sampling will follow the procedures presented in the approved Remedial Action work Plan (RAWP). Brown and Caldwell has developed a Flow Chart for both the North and South Soil Removal Areas that will be submitted to Bill Frederick for review and comment. Following Bill's review and acceptance, the Flow Charts will be submitted to the project team.

RESOLUTIONS OF COMMENTS/QUESTIONS/ISSUES/CONCERNS

Water Pumped from Slurry Wall: Resolved.

Question Regarding Sand in Sand Bags: Resolved.

PHASE 1 REMEDIAL ACTION
FORD ROAD LANDFILL

WEEKLY PROGRESS MEETING MINUTES
OCTOBER 11, 2011

Upper Surface Material Staging Area: Construction/installation of the Upper Surface Staging Area was resolved; further discussion involved the timing of sampling the soil materials, when off-site removal would occur, if any, and the potential issues related to TSCA and how TSCA relates to CERCLA. These potential issues will be reviewed and addressed before any excavation activities are performed at the South or North Soil Removal Area.

NEXT WEEKLY PROGRESS MEETING

The next Weekly Progress Meeting will be on Tuesday, October 18, 2011 at 2:00 pm at the site trailer.

For those who need to attend remotely, please use the following call in information:

Telephone Number: NON-RESPONSIVE [redacted]
Password:

PROGRESS PHOTOS

Completed access road with turnaround – Looking North

Transporting super sack sand bags down to the North Soil Removal Area

Placing super sack sand bags at the North Soil Removal Area along the river bank – Looking North.

PHASE 1 REMEDIAL ACTION
FORD ROAD LANDFILL

WEEKLY PROGRESS MEETING MINUTES
OCTOBER 18, 2011

The Weekly Progress Meeting began at 2:00 pm on Tuesday, October 18, 2011. The following parties were present:

Pat Steerman – PRP Group (via telephone)
Joe Montello – PRP Group (via telephone)
Dan George – OP-Tech (via telephone)
Joe Naselli – OP-Tech (via telephone)
Dave Curran – OP-Tech
Demaree Collier – U.S. EPA (via telephone)
Vanessa Steigerwald-Dick – Ohio EPA (via telephone)
Bill Frederick – USACE (via telephone)
Matt Spronz – LCMP
Elena Goodhall – Brown and Caldwell
Jim Peeples – Brown and Caldwell (via telephone)
Bill Foster – Brown and Caldwell

The meeting was initiated by Elena Goodhall. The following topics were discussed during the meeting:

GENERAL DISCUSSION

- Bill Frederick of the USACE will be onsite during the performance of the soil removal from both the North and South Soil Removal Areas.
- Demaree Collier of the U.S. EPA will be onsite October 20 and October 21.
- Pat Steerman of the PRP Group will be onsite October 20 and October 21.

HEALTH AND SAFETY

- No issues, near misses, or accidents to report.

PROJECT WORK – OCTOBER 12, 2011 THROUGH OCTOBER 18, 2011 – The following work activities were performed during the past one week period:

- Slurry wall maintenance.
- Finished filling super sack sand bags.
- Finished staging/installing super sack sand bags.
- Access road maintenance.
- Temporary erosion and sediment control maintenance.
- Material delivery – Low permeability soil.
- Constructed one more Upper Surface staging area.
- Installed pump to pump into the river.
- An additional excavator and off road end dump were mobilized to the site.
- The front end loader and the telehandler were demobilized from the site.

PHASE 1 REMEDIAL ACTION
FORD ROAD LANDFILL

WEEKLY PROGRESS MEETING MINUTES
OCTOBER 18, 2011

PROJECTED WORK – OCTOBER 19, 2011 THROUGH OCTOBER 25, 2011 – The following work activities are anticipated to be performed during the next one week period:

- Material delivery – low permeability soil.
- Backfill slurry wall with low permeability soil.
- Collect a sample of water from the Frac Tank for analysis of parameters requested by the City of Elyria WWTP.
- Begin and finish excavating the North Soil Removal Area.
- Begin backfilling the North Soil Removal Area.
- Access road maintenance.
- Temporary erosion and sediment control maintenance.
- Begin reconstructing the sedimentation basin berm.

SUBMITTALS – Submittal status during the past one week period:

No submittals were received during the past one week period.

PROJECT SCHEDULE:

Excavation activities for the North Soil Removal Area are anticipated to begin on Saturday, October 22, 2011 depending on weather (rain). Brown and Caldwell and OP-TECH will monitor the weather and site conditions and notify the project team if any changes in this schedule are necessary.

COMPLAINTS RECEIVED

No complaints were received during the past one week period.

COMMENTS/QUESTIONS/ISSUES/CONCERNS

There were no comments/questions/issues/concerns at this time.

RESOLUTIONS OF COMMENTS/QUESTIONS/ISSUES/CONCERNS

All comments/questions/issues/concerns have been resolved at this time.

NEXT WEEKLY PROGRESS MEETING

The next Weekly Progress Meeting will be on Tuesday, October 25, 2011 at 2:00 pm at the site trailer.

For those who need to attend remotely, please use the following call in information:

Telephone Number: NON-RESPONSIVE
Password: [redacted]

Brown AND Caldwell

PHASE 1 REMEDIAL ACTION
FORD ROAD LANDFILL

WEEKLY PROGRESS MEETING MINUTES
OCTOBER 18, 2011

PROGRESS PHOTOS

North Soil Removal Area – Looking North

North Soil Removal Area (after heavy rain) – Looking South

PHASE 1 REMEDIAL ACTION
FORD ROAD LANDFILL

WEEKLY PROGRESS MEETING MINUTES
OCTOBER 18, 2011

North Soil Removal Area, Dewatering Pad, and Lower River Rd – Looking North

PHASE 1 REMEDIAL ACTION
FORD ROAD LANDFILL

WEEKLY PROGRESS MEETING MINUTES
OCTOBER 25, 2011

The Weekly Progress Meeting began at 2:00 pm on Tuesday, October 25, 2011. The following parties were present:

Pat Steerman – PRP Group (via telephone)
Joe Montello – PRP Group (via telephone)
Dan George – OP-Tech (via telephone)
Joe Naselli – OP-Tech (via telephone)
Dave Curran – OP-Tech
Demaree Collier – U.S. EPA (via telephone)
Vanessa Steigerwald-Dick – Ohio EPA (via telephone)
Matt Spronz – LCMP
Elena Goodhall – Brown and Caldwell (via telephone)
Jim Peeples – Brown and Caldwell (via telephone)
Rick Isaac – Brown and Caldwell
Bill Foster – Brown and Caldwell

The meeting was initiated by Rick Isaac. The following topics were discussed during the meeting:

GENERAL DISCUSSION

- Bill Frederick of the USACE will be onsite during the performance of the soil removal from both the North and South Soil Removal Areas.
- Demaree Collier of the U.S. EPA was onsite October 20.
- Pat Steerman of the PRP Group was onsite October 20.
- Vanessa Steigerwald-Dick of the Ohio EPA was onsite October 20.
- The site received approximately 2-inches of rain on Wednesday, October 19, 2011 which resulted in the Black River raising (± 11 feet) and subsequently flowing out of its banks. As the river level receded the super sack sand bags were still in place and work was performed to maintain the silt fence.

HEALTH AND SAFETY

- No issues, near misses, or accidents to report.

PROJECT WORK – OCTOBER 19, 2011 THROUGH OCTOBER 25, 2011 – The following work activities were performed during the past one week period:

- Material delivery – Low permeability soil.
- Backfilled slurry wall with low permeability soil.
- Collected a sample of water from the Frac Tank for analysis of parameters requested by the City of Elyria WWTP.
- Access road maintenance.
- Temporary erosion and sediment control maintenance.

PHASE 1 REMEDIAL ACTION
FORD ROAD LANDFILL

WEEKLY PROGRESS MEETING MINUTES
OCTOBER 25, 2011

PROJECTED WORK – OCTOBER 26, 2011 THROUGH NOVEMBER 1, 2011 – The following work activities are anticipated to be performed during the next one week period:

- Material delivery – low permeability soil.
- Material delivery – rip rap
- Material delivery – No. 57 stone
- Begin and finish excavating the North Soil Removal Area.
- Begin backfilling the North Soil Removal Area.
- Access road maintenance.
- Temporary erosion and sediment control maintenance.

SUBMITTALS – Submittal status during the past one week period:

No submittals were received during the past one week period. OP-TECH will begin submitting the remaining submittals i.e. sedimentation pond principal spillway materials, vegetation materials, etc. Brown and Caldwell will review and return upon receipt.

PROJECT SCHEDULE:

Excavation activities for the North Soil Removal Area are anticipated to begin on either Thursday, October 27, 2011 or Friday, October 28, 2011 depending on weather (rain). Brown and Caldwell and OP-TECH will monitor the weather and site conditions and notify the project team if any changes in this schedule are necessary. OP-TECH plans to work through the weekend; weather permitting.

COMPLAINTS RECEIVED

No complaints were received during the past one week period.

COMMENTS/QUESTIONS/ISSUES/CONCERNS

There were no comments/questions/issues/concerns at this time.

RESOLUTIONS OF COMMENTS/QUESTIONS/ISSUES/CONCERNS

All comments/questions/issues/concerns have been resolved at this time.

NEXT WEEKLY PROGRESS MEETING

The next Weekly Progress Meeting will be on Tuesday, November 01, 2011 at 2:00 pm at the site trailer.

For those who need to attend remotely, please use the following call in information:

Telephone Number: NON-RESPONSIVE [redacted]
Password:

Brown AND Caldwell

PHASE 1 REMEDIAL ACTION
FORD ROAD LANDFILL

WEEKLY PROGRESS MEETING MINUTES
OCTOBER 25, 2011

PROGRESS PHOTOS

North Soil Removal Area – Looking North

Access Road – Looking North

PHASE 1 REMEDIAL ACTION
FORD ROAD LANDFILL

WEEKLY PROGRESS MEETING MINUTES
OCTOBER 25, 2011

Access Road – Looking Southwest

PHASE 1 REMEDIAL ACTION
FORD ROAD LANDFILL

WEEKLY PROGRESS MEETING MINUTES
NOVEMBER 1, 2011

The Weekly Progress Meeting began at 2:00 pm on Tuesday, November 1, 2011. The following parties were present:

Pat Steerman – PRP Group (via telephone)
Joe Montello – PRP Group (via telephone)
Joe Naselli – OP-Tech (via telephone)
Dave Curran – OP-Tech
Demaree Collier – U.S. EPA (via telephone)
Bill Frederick - USACE
Vanessa Steigerwald-Dick – Ohio EPA
Matt Spronz – LCMP
Elena Goodhall – Brown and Caldwell
Jim Peeples – Brown and Caldwell (via telephone)
Rick Isaac – Brown and Caldwell (via telephone)
Bill Foster – Brown and Caldwell

The meeting was initiated by Elena Goodhall. The following topics were discussed during the meeting:

GENERAL DISCUSSION

- Bill Frederick of the USACE has been onsite, October 28 – November 1, for the performance of the soil removal from the North Soil Removal Area, and will be onsite during the performance of the soil removal from the South Soil Removal Area.

HEALTH AND SAFETY

- No issues, near misses, or accidents to report.

PROJECT WORK – OCTOBER 26, 2011 THROUGH NOVEMBER 1, 2011 – The following work activities were performed during the past one week period:

- Began excavating the North Soil Removal Area.
- Access road maintenance.
- Temporary erosion and sediment control maintenance.

PROJECTED WORK – NOVEMBER 2, 2011 THROUGH NOVEMBER 8, 2011 – The following work activities are anticipated to be performed during the next one week period:

- The following materials will be delivered to the site:
  - Low permeability soil.
  - Rip rap.
  - No. 57 stone.
- Finish excavating the North Soil Removal Area.
- Survey bedrock at the North Soil Removal Area and stakeout South Soil Removal Area limits.
- Backfill the North Soil Removal Area.

- Initiate riverbank restoration activities.
- Begin excavating the South Soil Removal Area.
- Access road maintenance.
- Temporary erosion and sediment control maintenance.

SUBMITTALS – Submittal status during the past one week period:

No submittals were received during the past one week period. OP-TECH will begin submitting the remaining submittals i.e. sedimentation pond principal spillway materials, vegetation materials, etc. Brown and Caldwell will review and return upon receipt.

PROJECT SCHEDULE:

Excavation activities for the South Soil Removal Area are anticipated to begin on Monday, November 7, 2011. Brown and Caldwell will notify the project team if any changes in this schedule are necessary.

COMPLAINTS RECEIVED

No complaints were received during the past one week period.

COMMENTS/QUESTIONS/ISSUES/CONCERNS

There were no comments/questions/issues/concerns at this time.

RESOLUTIONS OF COMMENTS/QUESTIONS/ISSUES/CONCERNS

All comments/questions/issues/concerns have been resolved at this time.

NEXT WEEKLY PROGRESS MEETING

The next Weekly Progress Meeting will be on Tuesday, November 8, 2011 at 2:00 pm at the site trailer.

For those who need to attend remotely, please use the following call in information:

Telephone Number: NON-RESPONSIVE
Password: [redacted]

PHASE 1 REMEDIAL ACTION
FORD ROAD LANDFILL

WEEKLY PROGRESS MEETING MINUTES
NOVEMBER 1, 2011

PROGRESS PHOTOS

North Soil Removal Area – Looking North

North Soil Removal Area – Impacted Soil

Brown AND Caldwell

PHASE 1 REMEDIAL ACTION
FORD ROAD LANDFILL

WEEKLY PROGRESS MEETING MINUTES
NOVEMBER 1, 2011

North Soil Removal Area – Looking East

PHASE 1 REMEDIAL ACTION
FORD ROAD LANDFILL

WEEKLY PROGRESS MEETING MINUTES
NOVEMBER 8, 2011

The Weekly Progress Meeting began at 2:00 pm on Tuesday, November 8, 2011. The following parties were present:

Pat Steerman – PRP Group (via telephone)
Joe Montello – PRP Group (via telephone)
Dan George – OP-Tech (via telephone)
Bill Hunter – OP-Tech (via telephone)
Joe Naselli – OP-Tech (via telephone)
Dave Curran – OP-Tech
Demaree Collier – U.S. EPA (via telephone)
Bill Frederick – USACE (via telephone)
Vanessa Steigerwald-Dick – Ohio EPA
Elena Goodhall – Brown and Caldwell (via telephone)
Jim Peeples – Brown and Caldwell (via telephone)
Rick Isaac – Brown and Caldwell
Bill Foster – Brown and Caldwell

The meeting was initiated by Rick Isaac. The following topics were discussed during the meeting:

GENERAL DISCUSSION

- Sometime between 5:00 pm on Sunday, November 6 and 6:00 am on Monday, November 7, the office trailer and one of the Conex boxes was broken into. A laptop, cordless drill, reciprocating saw and a digital scale were stolen. The City of Elyria police were called and a report was filed. The City of Elyria police indicated that additional patrols along Ford Road would occur.
- Bill Frederick of the USACE will be onsite during the performance of the soil removal from the South Soil Removal Area.

HEALTH AND SAFETY

- No issues, near misses, or accidents to report.

PROJECT WORK – NOVEMBER 2, 2011 THROUGH NOVEMBER 8, 2011 – The following work activities were performed during the past one week period:

- The following materials were delivered to the site:
  - Low permeability soil.
  - Recycled concrete riprap.
  - Quarry run riprap.
  - No. 57 stone.
- Finish excavating the North Soil Removal Area.
- Field surveyed the bedrock at the North Soil Removal Area before initiating backfill activities and staked out the South Soil Removal Area limits.
- Backfilled the North Soil Removal Area with low permeability soil material.

PHASE 1 REMEDIAL ACTION
FORD ROAD LANDFILL

WEEKLY PROGRESS MEETING MINUTES
NOVEMBER 8, 2011

- Initiated riverbank restoration activities with placement of recycled concrete riprap on top of the bedrock and up to the top of the sand shelf in the Black River. The recycled concrete riprap was completed and placement of the quarry run riprap was started.
- Access road maintenance.
- Temporary erosion and sediment control maintenance.

PROJECTED WORK – NOVEMBER 9, 2011 THROUGH NOVEMBER 15, 2011 – The following work activities are anticipated to be performed during the next one week period:

- Remove super sack sandbags and take to the Contractor's Staging Area.
  - The sand will be emptied from the bags and the bags will be placed in a roll-off box for off-site disposal.
- Finish riverbank restoration activities with placement of the quarry run riprap on a 2:1 grade.
- Excavate and backfill the South Soil Removal Area.
- Access road maintenance.
- Temporary erosion and sediment control maintenance.

SUBMITTALS – Submittal status during the past one week period:

- Submittal No. 17: Principle Spillway Structure – returned to OP-TECH marked as "No Exceptions Taken".
- Submittal No. 19: Flexterra FGM - returned to OP-TECH marked as "No Exceptions Taken".
- Submittal No. 20: Seed and Mulch - returned to OP-TECH marked as "No Exceptions Taken" for the seed mix to be used in general areas of the Site. Submittal of the Steep Slope Seed Mix is required.
- Submittal No. 18: Enkamat 7020 – Brown and Caldwell to review.

PROJECT SCHEDULE:

Excavation activities for the South Soil Removal Area are anticipated to begin on Thursday, November 10, 2011. Brown and Caldwell will notify the project team if any changes in this schedule are necessary. Work for the South Soil Removal Area is projected to be two days.

COMPLAINTS RECEIVED

One complaint was received from the City of Elyria police department (police). A resident notified the police that the trucks hauling the riprap were driving at excessive speeds through Elyria. The police officer came to the site and notified us, and asked that we pass the warning along to the truck drivers. We did, and the trucks slowed down.

PHASE 1 REMEDIAL ACTION
FORD ROAD LANDFILL

WEEKLY PROGRESS MEETING MINUTES
NOVEMBER 8, 2011

COMMENTS/QUESTIONS/ISSUES/CONCERNS

South Soil Removal Area Decision Point: A question was asked regarding the decision point for determining the where the soil removed from the South Soil Removal Area would be placed.

Response: A reading a 30 or greater on the PID would require the soil material to be loaded and staged in the Material Staging Area on the Upper Surface Area of the Site; a reading below 30 on the PID would require the soil material to be placed above the flood plain in the Onsite Lower Placement Area.

Impacted Soil Removal: A question was asked regarding the volume of soil from the North Soil Removal Area requiring off-site disposal.

Response: Approximately 800 cubic yards of potentially-impacted soil is staged at the Upper Surface Area Material Staging Area form the North Soil Removal Area. The stockpile will be sampled and the samples submitted to the laboratory for analysis on Wednesday, November 9, 2011. Following receipt of the analytical results, the volume of impacted soil material for off-site disposal will be determined. The soil in stockpile within the material staging areas is covered and will remain covered until the final disposition of the soil material is determined.

Placement of Riprap North of the North Soil Removal Area: A suggestion was made to place the riprap material to the north of the North Soil Removal Area to tie the riprap into the existing riprap associated with the City of Elyria wastewater treatment plant swale.

Response: The riprap will be placed past the swale where the storm water from the Upper Surface Area of the Site discharges into the Black River and over to the City of Elyria wastewater treatment plant swale. The riprap will be placed from the river water's edge to approximately 10 feet up on the existing sand bar/bank. This "wrap around" will tie-in the riprap associated with the river bank stabilization and the City of Elyria wastewater treatment plant swale.

Weekly Progress Meeting Notification Update: A comment was made that with the project schedule extending into November the Weekly Progress Meeting e-mail notification need to be updated/extended.

Response: Elena Goodhall of Brown and Caldwell will send all project team members an extended notification for the Weekly Progress Meetings.

Copy of Revised Drawing C-15: A comment was made that some members of the project team did not have a copy of revised Drawing C-15 that depicts the riprap used for the river bank stabilization.

Response: Brown and Caldwell will send all project team members a copy of revised Drawing C-15.

RESOLUTIONS OF COMMENTS/QUESTIONS/ISSUES/CONCERNS

All comments/questions/issues/concerns have been resolved at this time.

NEXT WEEKLY PROGRESS MEETING

The next Weekly Progress Meeting will be on Tuesday, November 15, 2011 at 2:00 pm at the site trailer.

For those who need to attend remotely, please use the following call in information:

Telephone Number: NON-RESPONSIVE
Password: [redacted]

PROGRESS PHOTOS

Riverbank Restoration – Looking South

South Soil Removal Area – Looking towards the landfill.

South Soil Removal Area – Stone Backfill

PHASE 1 REMEDIAL ACTION
FORD ROAD LANDFILL

WEEKLY PROGRESS MEETING MINUTES
NOVEMBER 15, 2011

The Weekly Progress Meeting began at 2:00 pm on Tuesday, November 15, 2011. The following parties were present:

Pat Steerman – PRP Group (via telephone)
Joe Montello – PRP Group (via telephone)
Dan George – OP-Tech (via telephone)
Matt Spronz – LCPD (via telephone)
Joe Naselli – OP-Tech (via telephone)
Dave Curran – OP-Tech
Bill Frederick – USACE (via telephone)
Vanessa Steigerwald-Dick – Ohio EPA
Elena Goodhall – Brown and Caldwell (via telephone)
Jim Peeples – Brown and Caldwell (via telephone)
Nate Givens – Brown and Caldwell

The meeting was initiated by Elena Goodhall. The following topics were discussed during the meeting:

GENERAL DISCUSSION

- Revisions to construction drawings (C-15 and any others) will be sent to the regulatory agencies and project team.
- There will be no onsite activities for the weekend of Thanksgiving, November 24, 2011 through November 27, 2011.

HEALTH AND SAFETY

- No issues, near misses, or accidents to report.

PROJECT WORK – NOVEMBER 9, 2011 THROUGH NOVEMBER 15, 2011 – The following work activities were performed during the past one week period:

- Finished excavating the South Soil Removal Area.
- Field surveyed the bedrock at the South Soil Removal Area before initiating backfill activities.
- Backfilled the South Soil Removal Area with No. 57 size aggregate (bottom three feet) and soil material.
- Decommissioned the dewatering pad.
- Completed riverbank restoration including southern riprap break wall.
- Completed interim grading in and around soil removal areas.
- Demobilized one Frac tank.
- Began relocating soil stockpile from the Sedimentation Basin to the toe of slope above the 610-foot elevation.
- Access road maintenance.
- Temporary erosion and sediment control maintenance.

PHASE 1 REMEDIAL ACTION
FORD ROAD LANDFILL

WEEKLY PROGRESS MEETING MINUTES
NOVEMBER 15, 2011

PROJECTED WORK – NOVEMBER 16, 2011 THROUGH NOVEMBER 22, 2011 – The following work activities are anticipated to be performed during the next one week period:

- Finish relocation of soil stockpile from the Sedimentation Basin to the toe of slope above the 610-foot elevation.
- Work on grading and draining the South Access Road area.
- Sample the soil stockpile with material from the South Soil Removal Area.
  - Analytical results expected within the next few days.
  - Soil material in the Upper Surface Area staging area, not requiring offsite disposal, will be graded and covered with one-foot of clean soil.
- Access road maintenance.
- Grading and surface drainage for winter.
- Vegetation (depending on work completed).
- Temporary erosion and sediment control maintenance.

SUBMITTALS – Submittal status during the past one week period:

- Submittal No. 18: Enkamat 7020 – Brown and Caldwell to review.

PROJECT SCHEDULE:

OP-TECH will begin working on activities required to complete the scope of work projected to be performed to close the site for the winter.

COMPLAINTS RECEIVED

There were no complaints or concerns.

COMMENTS/QUESTIONS/ISSUES/CONCERNS

Soil Stockpile Relocation: A comment was made about the relocation of the soil stockpile from the Sedimentation Basin to the east slope above the 610-foot elevation. Ohio EPA recommends that measures are taken to mitigate the potential direct-contact exposure risk resulting from placement of potentially-impacted soil on the east slope.

Site Winterization: Surface water drainage and erosion and sedimentation control will be a focal point as the site is prepared for winter. Silt fence will be reinforced with straw bales in areas of concentrated surface water flow.

RESOLUTIONS OF COMMENTS/QUESTIONS/ISSUES/CONCERNS

South Soil Removal Area Decision Point: Resolved.

Impacted Soil Removal Volume: Resolved.

Placement of Riprap North of the North Soil Removal Area: Resolved.

PHASE 1 REMEDIAL ACTION
FORD ROAD LANDFILL

WEEKLY PROGRESS MEETING MINUTES
NOVEMBER 15, 2011

Weekly Progress Meeting Notification Update: Resolved.

Copy of Revised Drawing C-15: Resolved.

NEXT WEEKLY PROGRESS MEETING

The next Weekly Progress Meeting will be on Tuesday, November 29, 2011 at 2:00 pm at the site trailer.

For those who need to attend remotely, please use the following call in information:

Telephone Number: NON-RESPONSIVE
Password: [redacted]

PROGRESS PHOTOS

North Soil Removal Area Interim Grading – Looking North

Brown AND Caldwell

PHASE 1 REMEDIAL ACTION
FORD ROAD LANDFILL

WEEKLY PROGRESS MEETING MINUTES
NOVEMBER 15, 2011

Riprap Break Wall at South End of Riverbank Restoration – Looking East

Relocation of Soil Stockpile from the Sedimentation Basin – Looking South

PHASE 1 REMEDIAL ACTION
FORD ROAD LANDFILL

WEEKLY PROGRESS MEETING MINUTES
NOVEMBER 15, 2011

Relocation of Soil Stockpile from the Sedimentation Basin – Looking North

PHASE 1 REMEDIAL ACTION
FORD ROAD LANDFILL

WEEKLY PROGRESS MEETING MINUTES
NOVEMBER 22, 2011

The Weekly Progress Meeting began at 2:00 pm on Tuesday, November 22, 2011. The following parties were present:

Pat Steerman – PRP Group (via telephone)
Joe Montello – PRP Group (via telephone)
Joe Naselli – OP-TECH (via telephone)
Dave Curran – OP-TECH
Bill Frederick – USACE (via telephone)
Clarissa Gereby – Ohio EPA (via telephone)
Vanessa Steigerwald-Dick – Ohio EPA (via telephone)
Elena Goodhall – Brown and Caldwell (via telephone)
Jim Peeples – Brown and Caldwell (via telephone)
Rick Isaac – Brown and Caldwell
Nate Givens – Brown and Caldwell
Dan George – OP-TECH (via telephone)

The meeting was initiated by Rick Isaac. The following topics were discussed during the meeting:

GENERAL DISCUSSION

- Revisions to construction drawing sheet C-15 have been sent to the regulatory agencies and project team.
- There will be no onsite activities for the weekend of Thanksgiving, November 24, 2011 through November 27, 2011.

HEALTH AND SAFETY

- No issues, near misses, or accidents to report.

PROJECT WORK – NOVEMBER 16, 2011 THROUGH NOVEMBER 22, 2011 – The following work activities were performed during the past one week period:

- Demobilized one articulated end dump truck.
- Demobilized pumps.
- Demobilized remaining Frac tank.
- Completed emptying and disposed of Super Sack sandbags.
- Completed grading of the site from the North Soil Removal Area south to the Sedimentation Basin area.
- Finished relocating the soil stockpile from the Sedimentation Basin to two separate areas at the toe of slope above the 610-foot elevation.
- The seeding subcontractor was onsite to observe the area where seeding will be required.
- Worked on establishing the site surface water drainage for when the Phase 1 work is completed and into the winter/spring season.

- Access road maintenance.
- Temporary erosion and sediment control maintenance.

PROJECTED WORK – NOVEMBER 23, 2011 THROUGH NOVEMBER 29, 2011 – The following work activities are anticipated to be performed during the next one week period:

- Cover and secure a poly-tarp over the two relocated soil areas at the toe of slope above the 610-foot elevation.
- Grade soil stockpiles in Upper Staging Area and cover with one-foot of soil.
  - Soil Stockpile No. 3 analytical results pending.
- Complete the grading and surface drainage for winter.
- Vegetation (depending on when the Phase 1 work is completed).
- Procure and install willow stakes at the top of the riprap associated with the former North Soil Removal Area.
- Access road maintenance.
- Temporary erosion and sediment control maintenance.

SUBMITTALS – Submittal status during the past one week period:

- Submittal No. 18: Enkamat 7020 – Due to no Enkamat 7020 being used in the Phase 1 work activities, Brown and Caldwell will not review.

PROJECT SCHEDULE:

OP-TECH will continue working on activities required to complete the scope of work projected to be performed to complete the Phase 1 work activities and close the site for the winter. The surveyor is tentatively scheduled to be onsite Tuesday, November 29 to perform a field survey of completed work.

COMPLAINTS RECEIVED

There were no complaints or concerns.

COMMENTS/QUESTIONS/ISSUES/CONCERNS

Analytical Results of the Soil Removal Areas: A question was asked regarding the analytical results of the soil samples from the stockpiles for the North and South Soil Removal Areas. The soil samples for the North Soil Removal Area were significantly below the 50 ppm requirement at 1.0 ppm with some results ranging a little higher or lower than 1 ppm. The results for the soil samples from the South Soil Removal Area are not available at this time.

Based on these results, the soil from the North Soil Removal Area will be graded and covered with one-foot of cover soil and seeded.

PHASE 1 REMEDIAL ACTION
FORD ROAD LANDFILL

WEEKLY PROGRESS MEETING MINUTES
NOVEMBER 22, 2011

Slurry Wall Location: A question was asked about the location of the slurry wall at the former North Soil Removal Area. The slurry wall has been located by field survey and the location will be included on the Project Record Drawings.

Willow Stakes: A discussion related to the willow stakes to be planted along the top of the riprap associated with the former North Soil Removal Area:

- There are 17 varieties of willow stakes. Keep the species variety to a small list; do not want to be too variable.
- Jim Peeples will send the list of available species to Bill Frederick to review.
- Bill Frederick wants to be onsite during the installation of the willow stakes; available dates are November 29 and November 30.
  - OP-TECH may be able to have the willow stakes onsite the week of November 28, 2011, if the willow stakes can be ordered by November 23, 2011.
  - The Ohio EPA wants to be onsite during the installation of the willow stakes, also.
- OP-TECH needs to know the number required and species of willow stakes to order.
  - Several species to consider include stringco, pussy, heart leaf, basket, and black.
  - Willow stakes need to be three to six feet in length and ½-inch to one-inch in diameter.
  - OP-TECH will contact the supplier to determine what is available and the number available.

Willow Stake Installation Notification: A request was made for notification of when the willow stake installation would be performed. All member of the project team will receive notification of when the willow stake installation will be performed.

RESOLUTIONS OF COMMENTS/QUESTIONS/ISSUES/CONCERNS

Soil Stockpile Relocation: A poly-tarp will be installed and secured over the relocated soil stockpiles. Resolved.

Site Winterization: The erosion and sedimentation controls will be maintained and replaced, if necessary, as the Phase 1 work activities are completed. Ongoing.

NEXT WEEKLY PROGRESS MEETING

The next Weekly Progress Meeting will be on Tuesday, December 6, 2011 at 2:00 pm at the site trailer.

For those who need to attend remotely, please use the following call in information:

Telephone Number: NON-RESPONSIVE [redacted]
Password:

Brown AND Caldwell

PHASE 1 REMEDIAL ACTION
FORD ROAD LANDFILL

WEEKLY PROGRESS MEETING MINUTES
NOVEMBER 22, 2011

PROGRESS PHOTOS

Southern Soil Stockpile Relocation Area – Looking North

Northern Soil Stockpile Relocation Area – Looking Northwest

PHASE 1 REMEDIAL ACTION
FORD ROAD LANDFILL

WEEKLY PROGRESS MEETING MINUTES
NOVEMBER 29, 2011

The Weekly Progress Meeting began at 2:00 pm on Tuesday, November 29, 2011. The following parties were present:

Pat Steerman – PRP Group (via telephone)
Joe Naselli – OP-TECH (via telephone)
Dan George – OP-TECH (via telephone)
Demaree Collier – U.S. EPA (via telephone)
Bill Frederick – USACE (via telephone)
Elena Goodhall – Brown and Caldwell (via telephone)
Jim Peeples – Brown and Caldwell (via telephone)
Rick Isaac – Brown and Caldwell (via telephone)
Nate Givens – Brown and Caldwell
Dave Curran – OP-TECH

The meeting was initiated by Elena Goodhall. The following topics were discussed during the meeting:

GENERAL DISCUSSION

- Bill Frederick is planning on stopping by the site on Wednesday, November 30, 2011 on his way to another site.

HEALTH AND SAFETY

- A minor traffic accident occurred off the site involving the driver transporting the vibratory roller off the site.
- No issues, near misses, or accidents to report from the site.

PROJECT WORK – NOVEMBER 23, 2011 THROUGH NOVEMBER 29, 2011 – The following work activities were performed during the past one week period:

- Cleaned and demobilized the vibratory sheepsfoot roller from the site.
- Worked on establishing the site surface water drainage for when the Phase 1 work is completed and into the winter/spring season.
- The area interior to the Sedimentation Basin has been graded.
- The material stockpile located at the Upper Surface Area from the North Soil Removal Area has been graded and the height will be checked by the surveyor.
- The poly-tarp material to cover the two relocated soil areas at the toe of slope above the 610-foot elevation is onsite.
- Access road maintenance.
- Temporary erosion and sediment control maintenance.

PROJECTED WORK – NOVEMBER 30, 2011 THROUGH DECEMBER 6, 2011 – The following work activities are anticipated to be performed during the next one week period:

- Cover and secure the poly-tarp material over the two relocated soil areas at the toe of slope above the 610-foot elevation.

- Procure and install willow stakes at the top of the riprap associated with the former North Soil Removal Area.
- Surveyor onsite on Wednesday, November 30, 2011 to begin "as-built" field survey work.
- Continue cleaning equipment for demobilization from the site.
- Remove the dumpster from the site.
- Access road maintenance.
- Temporary erosion and sediment control maintenance.

SUBMITTALS – All required submittals have been submitted, reviewed, and returned.

PROJECT SCHEDULE:

OP-TECH will continue working on activities required to complete the scope of work projected to be performed to complete the Phase 1 work activities and close the site for the winter. The surveyor is tentatively scheduled to be onsite Wednesday, November 30 to perform a field survey of completed work.

Depending on weather (rain) and delivery of the willow stakes, willow stake planting is scheduled to begin on Monday, December 5, 2011.

Seeding will be performed following completion of the scope of work projected to be performed to complete the Phase 1 work activities.

COMPLAINTS RECEIVED

There were no complaints or concerns.

COMMENTS/QUESTIONS/ISSUES/CONCERNS

No comments, questions, issues or concerns were voiced.

RESOLUTIONS OF COMMENTS/QUESTIONS/ISSUES/CONCERNS

Analytical Results of the Soil Removal Areas: Resolved.

Slurry Wall Location: Resolved.

Willow Stakes: Resolved.

Willow Stake Installation Notification: Resolved.

NEXT WEEKLY PROGRESS MEETING

The next Weekly Progress Meeting will be on Tuesday, December 6, 2011 at 2:00 pm at the site trailer.

For those who need to attend remotely, please use the following call in information:

NON-RESPONSIVE [redacted]

PHASE 1 REMEDIAL ACTION
FORD ROAD LANDFILL

WEEKLY PROGRESS MEETING MINUTES
NOVEMBER 29, 2011

PROGRESS PHOTOS

South Access Road and Sedimentation Basin Interim Grading – Looking Northeast

Interim Surface Drainage – Looking Northeast

Brown AND Caldwell

PHASE 1 REMEDIAL ACTION
FORD ROAD LANDFILL

WEEKLY PROGRESS MEETING MINUTES
DECEMBER 6, 2011

The Weekly Progress Meeting began at 2:00 pm on Tuesday, November 29, 2011. The following parties were present:

Pat Steerman – PRP Group (via telephone)
Joe Montello – PRP Group (via telephone)
Joe Naselli – OP-TECH (via telephone)
Dan George – OP-TECH (via telephone)
Dave Curran – OP-TECH (via telephone)
Demaree Collier – U.S. EPA (via telephone)
Vanessa Steigerwald-Dick – Ohio EPA (via telephone)
Clarissa Gereby – Ohio EPA (via telephone)
Elena Goodhall – Brown and Caldwell (via telephone)
Jim Peeples – Brown and Caldwell (via telephone)
Rick Isaac – Brown and Caldwell
Bill Foster – Brown and Caldwell

The meeting was initiated by Elena Goodhall. The following topics were discussed during the meeting:

GENERAL DISCUSSION

- Bill Frederick and representative(s) of the Ohio EPA will be onsite on Monday, December 12, 2011 to observe the willow stake planting. Brown and Caldwell will monitor the weather conditions and keep all parties up-to-date on if the schedule changes.

HEALTH AND SAFETY

- No issues, near misses, or accidents to report from the site.

PROJECT WORK – NOVEMBER 30, 2011 THROUGH DECEMBER 6, 2011 – The following work activities were performed during the past one week period:

- Installed the poly-tarp material to cover the two relocated soil areas at the toe of slope above the 610-foot elevation is onsite.
- Surveyor onsite to perform "as-built" field survey work.
- Ordered willow stakes.
- Access road maintenance.
- Temporary erosion and sediment control maintenance.

PROJECTED WORK – DECEMBER 7, 2011 THROUGH DECEMBER 13, 2011 – The following work activities are anticipated to be performed during the next one week period:

- Installation of the poly-tarp material over the soil material located at the Upper Surface Area Staging Area.
- Install silt fence at the bottom of the poly-tarp associated with the two relocated soil areas at the toe of slope above the 610-foot elevation.
- Install willow stakes at the top of the riprap associated with the former North Soil Removal Area.

PHASE 1 REMEDIAL ACTION
FORD ROAD LANDFILL

WEEKLY PROGRESS MEETING MINUTES
DECEMBER 6, 2011

- Schedule seeding subcontractor to be onsite; potentially Wednesday, December 14, 2011.
- Continue cleaning equipment for demobilization from the site.
- Demobilization of the office trailer and Comex box from the site.
- Access road maintenance.
- Temporary erosion and sediment control maintenance.

SUBMITTALS – All required submittals have been submitted, reviewed, and returned.

PROJECT SCHEDULE:

Depending on weather (rain) and delivery of the willow stakes, willow stake planting is scheduled to begin on Monday, December 12, 2011.

Seeding will be performed following completion of the scope of work projected to be performed to complete the Phase 1 work activities; potentially Wednesday, December 14, 2011.

COMPLAINTS RECEIVED

There were no complaints or concerns.

COMMENTS/QUESTIONS/ISSUES/CONCERNS

Willow Stake Planting: A comment was made to keep all parties informed of the schedule for the willow stake planting. Brown and Caldwell will monitor the weather and site conditions (level of the Black River) and inform the parties if the willow planting schedule changes.

RESOLUTIONS OF COMMENTS/QUESTIONS/ISSUES/CONCERNS

None to discuss.

NEXT WEEKLY PROGRESS MEETING

The next Weekly Progress Meeting will be on Tuesday, December 13, 2011 at 2:00 pm at the site trailer.

For those who need to attend remotely, please use the following call in information:

Telephone Number: NON-RESPONSIVE

PHASE 1 REMEDIAL ACTION
FORD ROAD LANDFILL

WEEKLY PROGRESS MEETING MINUTES
DECEMBER 6, 2011

PROGRESS PHOTOS

Small soil material area w/poly-tarp cover – Looking North

Large soil material area w/poly-tarp cover – Looking Northeast

PHASE 1 REMEDIAL ACTION
FORD ROAD LANDFILL

WEEKLY PROGRESS MEETING MINUTES
DECEMBER 13, 2011

The Weekly Progress Meeting began at 2:00 pm on Tuesday, December 13, 2011. The following parties were present:

Pat Steerman – PRP Group (via telephone)
Joe Montello – PRP Group (via telephone)
Joe Naselli – OP-TECH (via telephone)
Dan George – OP-TECH (via telephone)
Aaron Hollenbeck – OP-TECH
Bill Frederick – USACE (via telephone)
Vanessa Steigerwald-Dick – Ohio EPA
Clarissa Gereby – Ohio EPA
Matt Spronz – LCPD
Bill Foster – Brown and Caldwell
Jim Peeples – Brown and Caldwell (via telephone)
Elena Goodhall – Brown and Caldwell (via telephone)
Rick Isaac – Brown and Caldwell (via telephone)

The meeting was initiated by Rick Isaac. The following topics were discussed during the meeting:

HEALTH AND SAFETY

- No issues, near misses, or accidents to report from the site.

PROJECT WORK – DECEMBER 7, 2011 THROUGH DECEMBER 13, 2011 – The following work activities were performed during the past one week period:

- Continued to demobilize equipment.
- Willow stakes planted along the top of the riprap associated with the former North Soil Removal Area.
- Upper Surface Area soil stockpiles, associated with the former North Soil removal Area, covered with poly-tarp material and anchored.
- Access road maintenance.
- Temporary erosion and sediment control maintenance.

PROJECTED WORK – DECEMBER 14, 2011 THROUGH DECEMBER 30, 2011 – The following work activities are anticipated to be performed during the next one week period:

- Plant extra willow stakes planted perpendicular to the top of bank.
- Seeding contractor mobilizing to the site on Wednesday.
- Seeding on Thursday and Friday (may go into Saturday depending on weather related site conditions).
- Complete equipment and trailer cleaning for demobilization from the site.
- Temporary erosion and sediment control maintenance.

SUBMITTALS – All required submittals have been submitted, reviewed, and returned.

PHASE 1 REMEDIAL ACTION
FORD ROAD LANDFILL

WEEKLY PROGRESS MEETING MINUTES
DECEMBER 13, 2011

PROJECT SCHEDULE:

OP-TECH anticipates being completed and offsite by end of the day on Tuesday, December 20, 2011.

Final Site Walkthrough scheduled for Thursday, December 15, 2011 at 1:00 p.m.

COMPLAINTS RECEIVED

There were no complaints or concerns.

COMMENTS/QUESTIONS/ISSUES/CONCERNS

None to discuss.

RESOLUTIONS OF COMMENTS/QUESTIONS/ISSUES/CONCERNS

Willow Stake Planting: Resolved.

NEXT WEEKLY PROGRESS MEETING

No additional Weekly Progress Meeting are scheduled.

PROGRESS PHOTOS

Upper Surface Area soil stockpile w/poly-tarp cover – Looking South

Willow stakes planted along the top of the riprap.

Willow stakes backfilled.

Phase II Remedial Action

THIS PAGE INTENTIONALLY LEFT BLANK.

PHASE 2 REMEDIAL ACTION
FORD ROAD LANDFILL

FINAL SITE INSPECTION SUMMARY
DECEMBER 4, 2012

The Final Site Inspection began at 12:00 pm on Tuesday, December 4, 2012. The following parties were present:

Honorable Holly Brinda – City of Elyria
Mary Siwierka – City of Elyria
Pat Steerman – PRP Group
Joe Montello – PRP Group
Demaree Collier – U.S. EPA
Vanessa Steigerwald-Dick – Ohio EPA
Clarissa Gereby – Ohio EPA
Jim Ziemnik – Metro Parks Service
Paul Hruby, Jr. – Metro Parks Service
Brian Holmes – Metro Parks Service
Paul Miller – Haynes Construction
Bill Foster – Brown and Caldwell
Rick Isaac – Brown and Caldwell
Lisa Roberson – Chronicle-Telegram
Brian Bishop – Chronicle-Telegram

The meeting was initiated by Demaree Collier of the U.S. EPA. The following topics were discussed during the meeting:

HEALTH AND SAFETY

Rick Isaac of Brown and Caldwell: Site walkthrough participants to be careful walking down the South Access Road due to the steepness of the grade.

GENERAL DISCUSSION

Demaree Collier provided a summary of the Ford Road Site.

- Superfund Site under CERCLA.
- Prior to initiation of the Remedial Action, the Site was a former landfill with open space and portions covered with trees and other vegetation.
- Remedial Action performed in two phases:
  - Phase I – Erosion and sedimentation controls and "Hot Spot" removal along the Black River.
  - Phase II – Sedimentation Basin construction, consolidation of waste and construction of the soil buttress and final cover system cap.

A question was asked regarding the monitoring of groundwater and property restrictions.

- Groundwater will be monitored for a period of 15 years which may be extended.
  - Responsibility of the PRP Group.
  - Groundwater monitoring requirements are addressed in the Operations and Maintenance (O&M) Plan written for the Site.
- Routine inspections will be performed at the Site by the Owner – Lorain County Metro Park District.

- 5-year reviews will be performed by the U.S. EPA at the Site.
  - Inspect the site including institutional controls, i.e. deed restrictions, etc. and monitoring records review.
- Property restrictions will be determined through consultation with the U.S. EPA, the PRP Group, and the Lorain County Metro Park District.
  - At a minimum no penetrations of the final cover system cap and soil buttress will be allowed and no building structures will be allowed.
  - Recreational uses will be at the discretion of the Site owner - Lorain County Metro Park District.

A question was asked regarding the gate(s) and fencing.

- Double-swing gates will be installed at each entrance (North and South) with minimal sections of fencing extending from each side of the gates.
- Haynes Construction will be performing this activity as part of the Phase II Remedial Action.

A question was asked to expand on the work performed for each phase of the Remedial Action.

- Construction of the Phase I Remedial Action was completed between August 8, 2011 and December 27, 2011 consisting of the following:
  - Initial site preparation;
  - Preliminary access road construction;
  - Installation of the slurry wall at the North Soil Removal Area;
  - Excavation of the North and South Soil Removal Areas including testing and, based on the results of the field testing, either placement of the excavated soil in designated area(s) of the Lower Placement Area or in stockpiles at the Upper Surface Area;
    - Polychlorinated biphenyls (PCBs) were associated with the North Soil Removal Area and volatile organic compounds were associated with the South Soil Removal Area.
    - Test results from the soil samples collected from each soil removal area determined the level of concentration to be below any action levels identified for the Site.
  - Backfilling of the North and South Soil Removal Areas and installation of the riprap face along the Black River bank at the North Soil Removal Area; and
  - Site restoration and demobilization from the site.
- The Phase II Remedial Action was completed between May 29, 2012 and October 26, 2012 consisting of the following:
  - Initial site preparation;
  - Construction of the Sedimentation Basin;
  - Construction of the North and South Access Roads;
  - Construction of the North and South Seep Drains;

- Construction of the Steep Slope Area soil buttress including diversion swales and downchute channel;
- Extension of riprap face to elevation 612 at the Black River bank at the former North Soil Removal Area;
- Construction of the Ford Road Culvert Outlet Channel;
- Construction of the Drivable Drainage Channel;
- Construction of the final cover cap system at the Upper Surface Area;
- Vegetation of the disturbed areas; and
- Site restoration and demobilization from the site.

A question was asked regarding concerns of the residents and wildlife now that the Remedial Action has been implemented.

- The Remedial Action, as implemented, has made the Site safe for residents and wildlife.

SITE WALKTHROUGH

Participants walked the Site from the South Access Road progressing across the Sedimentation Basin berm and up the North Access Road. The following provides questions/comments addressed during the walkthrough:

- What was the total cost of the Remedial Action?
  - $3,5000,000
- The silt fence was installed around the perimeter of the Site where the Remedial Action work was performed for erosion/sediment control.
- What is the brown object running across the slope?
  - Straw wattle installed as a break to impede the flow of surface water running down the face of the slope.
- What is the depth of the groundwater?
  - The groundwater varies from a depth of 18.7 feet to 35.4 feet.
- What is the flexterra/green armor?
  - The flexterra/green armor is a synthetic turf reinforced matting (TRM) Enkamat 7020 (Green Armor) in filled with the flexible growth medium (Flex Terra® HP-FGM™) and vegetation. This combination of materials is specifically used to promote the establishment of vegetation on steep slope areas.
- The willow stake planting included approximately 350 willow stakes planted from the south end of the riprap face within the Black river floodplain progressing to the south. There is also approximately 1,300 willow stakes planted at the midpoint along the riprap face.

PHASE 2 REMEDIAL ACTION
FORD ROAD LANDFILL

FINAL SITE INSPECTION SUMMARY
DECEMBER 4, 2012

PUNCH LIST

The following punch list provides items, developed following the Site walkthrough, that Haynes Construction needs to address:

1. Pinch point at the southern end of the lower diversion channel causing erosion rill/gully that needs to be filled and the Green Armor/Flex Terra re-anchored (see Photograph No. 1).
2. Erosion rills/gullies adjacent to and on the southern side of the Downchute Channel (see Photograph No. 2).
3. Four areas were significant "sloughing" of the topsoil and soil material has occurred on the southern slope of the Steep Slope Area above the straw wattle (see Photograph No. 3).
4. Erosion rills/gullies south of the "sloughing" area on the southern Steep Slope Area (see Photograph No. 4).
5. Erosion rills/gullies north of the Downchute Channel from the Drivable Drainage Channel up the slope (see Photographs No. 5 and 6).
6. Remove the "siltation deltas" at the base of the rills/gullies in the lower diversion channels to re-establish the slope and grade of the channels to promote flow along the channel.
7. Remove sediment from the Downchute Channel outlet structure (see Photograph No. 7).
8. Re-grade, re-anchor, and re-vegetate the emergency spillway associated with the Sedimentation Basin (see Photograph No. 8).
9. Re-grade and re-vegetate the Drivable Drainage Channel (see Photographs No. 9 and 10).
10. Pull/move the Green Armor sheets back in place and re-anchor, if suitable material, i.e. not sediment, is available for installation of the anchors along the slope below the Drivable Drainage Channel to the floodplain (see Photographs No. 11 and 12).
    - If suitable material is not available to re-anchor the Green Armor sheets, then remove the sheet entirely and store onsite for re-use in the spring of 2013.
11. Pull/move and re-anchor the Green Armor sheets on the south slope of the Ford Road Culvert Outlet Channel (see Photograph No. 13).
12. Re-vegetate and area approximately 4 acres in size on the Upper Surface Area (see Photograph No. 14).
13. Install gates and fencing at the North and South Access Roads from Ford Road.
14. Repair the entrance/driveway from Ford Road to the Lorain County Metro Park District Maintenance Garage.

The referenced photographs are provided in Attachment 2.

PUNCH LIST SCHEDULE

A schedule provided by Haynes Construction is included as Attachment 1 to this Summary that provides dates when the Punch List items will be addressed. The U.S. EPA, USACOE, and Ohio EPA agreed that some of the Punch List Items could be performed in the spring of 2013 when Site and weather conditions would be more favorable.

Attachment 1: Punch List Schedule

THIS PAGE INTENTIONALLY LEFT BLANK.

Mark Haynes Construction, Inc.
3130 State Route 18 East
Norwalk, Ohio 44857

January 21, 2013

Ford Road - Schedule for Maintenance of Storm Damage Repair

1 . Pinch point to be filled and Green Armor re-anchored between January 21, 2013 and March 29, 2013 (weather permitting).

2-5. Erosion rills and gullies to be filled when possible to maintain stability until grass growth permanently stabilizes areas.

6 & 7. Siltation deltas and sediment to be removed between January 21, 2013 and March 29, 2013 (weather permitting).

8 & 9. Re-grading and re-vegetation to take place as early as possible in Spring 2013.

10 & 11. Green Armor to be re-anchored or temporarily stored on site between January 21, 2013 and April 30, 2013. Re-vegetation and all Green Armor placement to be finished as soon as possible in Spring 2013.

12. This area on the upper surface will be re-vegetated in the Spring of 2013 to fill in the noted bare area.

13. Fence and Gate installation - January 7 and 15, 2013

14. Repair of the driveway to the Lorain Metro Park Maintenance Garage will be reviewed in March 2013 with the Metro Park's Staff.

*to be able to perform repairs and prevent further damage and allow access to slopes, the ground needs to freeze deep enough to support equipment during the winter season, snow cover will limit access and the ability to properly place any soils or erosion blanket.

THIS PAGE INTENTIONALLY LEFT BLANK.

Attachment 2: Photographs

THIS PAGE INTENTIONALLY LEFT BLANK.

Photograph No. 1 – Gullies/washout below lower diversion channel.

Photograph No. 2 – Rills/gullies south of the downchute channel.

Photograph No. 3 – "Sloughing" areas on the southern Steep Slope Area.

Photograph No. 4 – Rills/gullies on the southern Steep Slope Area.

Photograph No. 5 – Rills/gullies northern Steep Slope Area above the Drivable Drainage Channel

Photograph No. 6 – Rills/gullies northern Steep Slope Area above the Drivable Drainage Channel

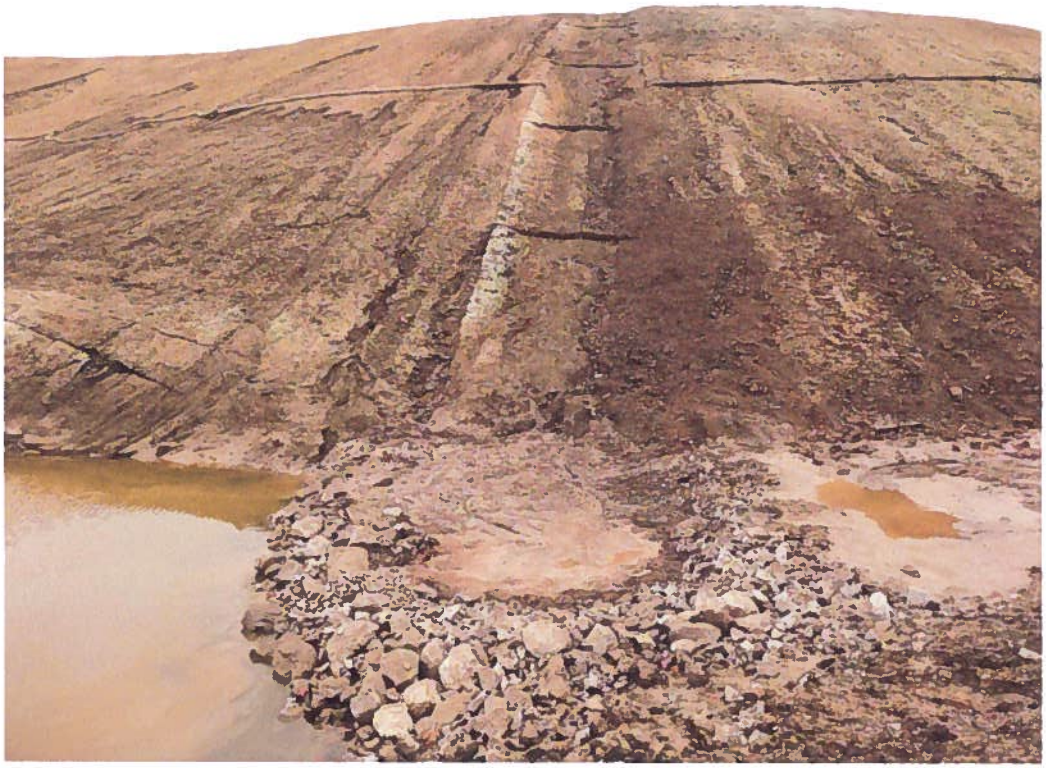

Photograph No. 7 – Remove sediment from the Downchute Channel outlet structure.

Photograph No. 8 – Re-grade, re-anchor, and re-vegetate the Emergency Spillway.

Photograph No. 9 – Re-grade and re-vegetate the Drivable Drainage Channel.

Photograph No. 10 – Re-grade and re-vegetate the Drivable Drainage Channel.

Photograph No. 11 – Pull/move and re-anchor Green Armor sheets.

Photograph No. 12 – Pull/move and re-anchor Green Armor sheets.

Photograph No. 13 – Pull/move and re-anchor Green Armor sheets – Ford Road Culvert Outlet Channel.

Photograph No. 14 – Re-vegetate an area of the Upper Surface Area.

THIS PAGE INTENTIONALLY LEFT BLANK.

PHASE 2 REMEDIAL ACTION
FORD ROAD LANDFILL

WEEKLY PROGRESS MEETING MINUTES
OCTOBER 23, 2012

The Weekly Progress Meeting began at 1:00 pm on Tuesday, October 23, 2012. The following parties were present:

Pat Steerman – PRP Group (via telephone)
Joe Montello – PRP Group (via telephone)
Demaree Collier – U.S. EPA (via telephone)
Clarissa Gereby – Ohio EPA (via telephone)
Brian Holmes – Metro Parks Service
David Miller – Haynes Construction
Bill Foster – Brown and Caldwell
Rick Isaac – Brown and Caldwell (via telephone)

The meeting was initiated by Rick Isaac. The following topics were discussed during the meeting:

HEALTH AND SAFETY

Personal Protective Equipment – High visibility shirt/vest, long pants, hard hat, safety glasses, steel toe boots are required for all personnel and visitors to the site.

No issues, near misses, or accidents to report.

GENERAL DISCUSSION

The Conex box and office trailer have been removed from the Site.

PROJECT WORK – OCTOBER 17, 2012 THROUGH OCTOBER 23, 2012 – The following work activities were performed during the past one week plus period:

- Haynes Construction completed topsoil placement.
- Haynes Construction completed seeding of the soil borrow area behind the Parks Service Maintenance Garage.
- Haynes Construction placed the ODOT 304 aggregate and ODOT 411 aggregate on the North Access Road from Ford Road to the northern end of the Drivable Drainage Channel.
- Haynes Construction placed the ODOT 411 aggregate on the South Access Road from the staging area to the northern end of the Sedimentation Basin.
- Haynes Construction installed the Netpave® 50 in the Drivable Drainage Channel.
- The landscape subcontractor worked on installing the Green Armor™ turf reinforcement mat (TRM) material in the diversion channels and initiated installation of the Flexterra® HP-FGM™ (flexible growth medium)/seeding on the Steep Slope Area.
- Haynes Construction installed the aggregate outlet structure at the bottom of the downchute channel.
- Haynes Construction "dressed up" the Ford Road Culvert Outlet Channel ditch line.
- The electric service and power pole were removed from the Site.
- The surveyors were onsite to perform the final field location of the complete work.

- Inspection and maintenance of the erosion and sediment controls – silt fence and straw bales; silt fence was repaired in several areas along the Black River.

PROJECTED WORK – OCTOBER 24, 2012 THROUGH OCTOBER 26, 2012 – The following work activities are anticipated to be performed during the next three day period:

- The landscape subcontractor will continue installation of the Green Armor™ TRM material and the Flexterra® HP-FGM™ (flexible growth medium)/seeding on the Steep Slope Area.
- The landscape subcontractor seed and mulch the Upper Surface Area.

SUBMITTALS: The following submittals were received and reviewed during the past one week period:

- Submittal No. 9A – (Chain link fence) - No Exceptions Taken.
- Submittal No. 9B – (Gates) - No Exceptions Taken.

All submittals have been received and reviewed.

PROJECT SCHEDULE:

Rain shutdown the work for half day on Tuesday, October 23, 2012 and no work is scheduled for October 24, 2012. Haynes Construction indicated the revised Substantial Completion date will be during the week of October 22, 2012 with the likely completion of landscape work on October 26, 2012; depending on weather.

COMPLAINTS RECEIVED

No complaints were received – U.S. EPA, Ohio EPA, the Site, Metro Parks Service, or Brown and Caldwell.

Brown and Caldwell received an e-mail from the City of Elyria requesting a meeting to inspect Ford Road for the purpose of identifying areas that need to be repaired. Brown and Caldwell and Haynes Construction will mark areas of Ford Road that appear to need repairs as a result of the truck traffic and schedule a meeting with the City of Elyria to obtain concurrence.

COMMENTS/QUESTIONS/ISSUES/CONCERNS

Site Access – Local Citizens.

Several people have stopped by the Site to inquire about access i.e. walking around the property, etc. to the Site following completion of the Remedial Action work. A decision was made to not allow people access to the Site. Brian Holmes of the Metro Parks Service indicated that the Site will be included in the patrols of the Metro Parks Service properties and people will be asked to leave the Site. The Metro Parks Service will also post signs such as "No Trespassing", "No Parking", etc. at the north and south gates.

PHASE 2 REMEDIAL ACTION
FORD ROAD LANDFILL

WEEKLY PROGRESS MEETING MINUTES
OCTOBER 23, 2012

Final Inspection.

The Final Inspection will be held on Tuesday, December 4, 2012 at 12:00 p.m. EST. Demaree Collier of the U.S. EPA extended an offer to the Mayor of Elyria to attend the meeting which was accepted; representative(s) of the City of Elyria will be in attendance.

Clarissa Gereby of the Ohio EPA will extend an invitation to David Oakes of the City of Elyria.

Future Progress Meeting(s).

Rick Isaac of Brown and Caldwell asked the Project Team if another Weekly Progress Meeting was necessary for Tuesday, October 30, 2012. A decision was made to not have another Weekly Progress Meeting. Brown and Caldwell will include/e-mail a series of photographs to the Project Team of the completed landscape work.

Project Update.

Pat Steerman asked when a project update would be issued. Demaree Collier of the U.S. EPA indicated a project update would to sent to the local community approximately one to two months following the Final Inspection.

New Superfund Guidance.

Demaree Collier of the U.S. EPA indicated that new Superfund Guidance related to delisting site was available on the website. Demaree will forward the link to Pat Steerman who will send to interested Project Team Members.

RESOLUTIONS OF COMMENTS/QUESTIONS/ISSUES/CONCERNS

Construction Entrance following Completion of Work.

Resolved.

Initial Round of Water Levels – New Groundwater Monitoring Wells.

Resolved. An initial round of water levels will be obtained the week of October 22, 2012 by Brown and Caldwell.

Status of Additional Willow Stake Planting.

Resolved. Brown and Caldwell will place an order for the additional willow stakes and make arrangements to have the willow stakes planted before the Final Inspection on December 4, 2012.

Seep Drain Outlet Pipes

Resolved. Haynes Construction will install one-way flap valves on the end of end pipeline on October 23, 2012.

Steep Slope Area Seed Mix

Resolved.

Communications following the October 23, 2012 Weekly Progress Meeting

Communications for the Project Team Members will be through e-mail following the October 23, 2012 Weekly Progress Meeting through December 4, 2012. Based on the subject of the future discussion(s), Pat Steerman will determine if conference call(s) and/or meeting will be necessary.

PHASE 2 REMEDIAL ACTION
FORD ROAD LANDFILL

WEEKLY PROGRESS MEETING MINUTES
OCTOBER 23, 2012

PROGRESS PHOTOS

South end of Steep Slope Area – Looking northeast.

South end of the Sedimentation Basin w/emergency spillway – Looking northeast.

Applying FlexTerra at north end of Drivable Drainage Channel – Looking northeast.

Downchute channel w/Green Armor and FlexTerra – Looking north

Steep Slope Area w/FlexTerra – Looking northwest

Steep Slope Area w/FlexTerra – Looking southwest

Upper diversion channel – Looking north

Upper diversion channel – Looking south

North end of Steep Slope Area w/Ford Road Culvert Outlet Channel – Looking northwest

South end of Upper Surface Area – Looking north

Middle Upper Surface Area - Looking southwest

North end Upper Surface Area - Looking northwest

PHASE 2 REMEDIAL ACTION
FORD ROAD LANDFILL

WEEKLY PROGRESS MEETING MINUTES
OCTOBER 16, 2012

The Weekly Progress Meeting began at 1:00 pm on Tuesday, October 16, 2012. The following parties were present:

Pat Steerman – PRP Group (via telephone)
Demaree Collier – U.S. EPA (via telephone)
Vanessa Steigerwald – Ohio EPA
Clarissa Gereby – Ohio EPA
David Miller – Haynes Construction
Bill Foster – Brown and Caldwell
Rick Isaac – Brown and Caldwell (via telephone)

The meeting was initiated by Rick Isaac. The following topics were discussed during the meeting:

HEALTH AND SAFETY

Personal Protective Equipment – High visibility shirt/vest, long pants, hard hat, safety glasses, steel toe boots are required for all personnel and visitors to the site.

No issues, near misses, or accidents to report.

GENERAL DISCUSSION

Vanessa Steigerwald of the Ohio EPA mentioned that the Ohio EPA is pleased with the way the Site looks and work being performed.

Brown and Caldwell has made arrangements with Mobile Mini for removal of the Conex box from the Site. The Conex box was moved so the final cover system cap could be constructed; this work has already been completed.

PROJECT WORK – OCTOBER 10, 2012 THROUGH OCTOBER 16, 2012 – The following work activities were performed during the past one week plus period:

- Haynes Construction completed placing topsoil on the Steep Slope Area.
- Inspection and maintenance of the erosion and sediment controls – silt fence and straw bales; silt fence was repaired in several areas along the Black River.
- Haynes Construction placed the ODOT 304 aggregate on the South Access Road from the staging area to the northern end of the Sedimentation Basin berm.
- Haynes Construction removed sediment from the bottom of the Sedimentation Basin and installed the rock check dams inside the Sedimentation Basin.
- The surveyors are onsite (Tuesday, October 16, 2012) to begin final field location of the complete work.
- The landscape subcontractor is mobilized onsite and began installing the Green Armor™ turf reinforcement mat (TRM) material in the diversion channels.

PHASE 2 REMEDIAL ACTION
FORD ROAD LANDFILL

WEEKLY PROGRESS MEETING MINUTES
OCTOBER 16, 2012

PROJECTED WORK – OCTOBER 17, 2012 THROUGH OCTOBER 23, 2012 – The following work activities are anticipated to be performed during the next one week period:

- Haynes Construction will complete move the Office Trailer and complete the final cover system cap including topsoil placement at the Upper Surface Area.
- Haynes Construction will place the ODOT 304 aggregate on the North Access Road from the construction entrance to the northern end of the Drivable Drainage Channel.
- Haynes Construction will place the ODOT 411 aggregate on the North and South Access Roads.
- Haynes Construction will install the Netpave® 50 in the Drivable Drainage Channel.
- The landscape subcontractor will continue installation of the Green Armor™ TRM material and initiate the Flexterra® HP-FGM™ (flexible growth medium)/seeding on the Steep Slope Area.

SUBMITTALS: No submittals were received during the past one week period; Rick Isaac will contact Haynes Construction regarding the chain link fence and gates submittal.

PROJECT SCHEDULE:

Haynes Construction indicated the revised Substantial Completion date will be during the week of October 22, 2012 with the likely completion of landscape work on October 24, 2012; depending on weather.

COMPLAINTS RECEIVED

No complaints were received – U.S. EPA, Ohio EPA, the Site, or Brown and Caldwell; no information was available from the Metro Parks Service.

COMMENTS/QUESTIONS/ISSUES/CONCERNS

Construction Entrance following Completion of Work.

A question was asked if aggregate material would be placed at the Construction Entrance to provide an area where people could park and for offloading equipment in the future, if required.

Initial Round of Water Levels – New Groundwater Monitoring Wells.

Pat Steerman asked if an initial round of water levels was obtained when the new groundwater monitoring wells installation was completed. Rick Isaac of Brown and Caldwell will check.

PHASE 2 REMEDIAL ACTION
FORD ROAD LANDFILL

WEEKLY PROGRESS MEETING MINUTES
OCTOBER 16, 2012

Status of Additional Willow Stake Planting.

Vanessa Steigerwald asked about the status i.e. have the stakes been ordered, when will the stakes be planted, etc. of the additional willow stake planting. The willow stakes are not available for cutting until November 1. Brown and Caldwell will check on ordering the willow stakes. The installation schedule of the additional willow stakes will be investigated to see if this activity can be performed before the December 4, 2012 site visit.

Seep Drain Outlet Pipes

A small flow was noticed coming through the seep drain outlet pipes. Brown and Caldwell will have Haynes Construction install gate valves on the end of the outlet pipes to prevent water in the Sedimentation Basin from entering the outlet pipes while allowing water from the seep drains to exit.

Steep Slope Area Seed Mix

A question was asked regarding the Steep Slope Area seed mix. Rick Isaac talked to the seed mix provider to verify that a form a winter rye grass is included in the seed mix. A request to provide the Project Team Members with the contents of the Steep Slope Area seed mix; Rick Isaac will e-mail the Steep Slope Area seed mix to the Project Team Members.

Communications following the October 23, 2012 Weekly Progress Meeting

Communications for the Project Team Members will be through e-mail following the October 23, 2012 Weekly Progress Meeting through December 4, 2012. Based on the subject of the future discussion(s), Pat Steerman will determine if conference call(s) and/or meeting will be necessary.

RESOLUTIONS OF COMMENTS/QUESTIONS/ISSUES/CONCERNS

Operations and Maintenance (O&M) Plan.

Resolved.

Final Inspection.

A tentative date of December 4, 2012 was discussed for the Certification of Construction Completion inspection at the Site. This date is good for the U.S. EPA, Bill Frederick of the Army Corps of Engineers, Pat Steerman, and Brown and Caldwell. Pat Steerman will contact Joe Montello of the PRP Group to determine Joe's availability. Demaree Collier of the U.S. EPA will contact the City of Elyria to extend an invitation. The meeting will be held at 1:00 p.m. depending on flight schedules for Project Team Members coming from out of state. The final arrangement will be made and distributed to the Project Team Members by Brown and Caldwell.

PROGRESS PHOTOS

Placing geotextile on South Access Road across the Sedimentation Basin – Looking east.

Spreading ODOT 304 aggregate on South Access Road – Looking southeast.

Netpave® 50 for the Drivable Drainage Channel.

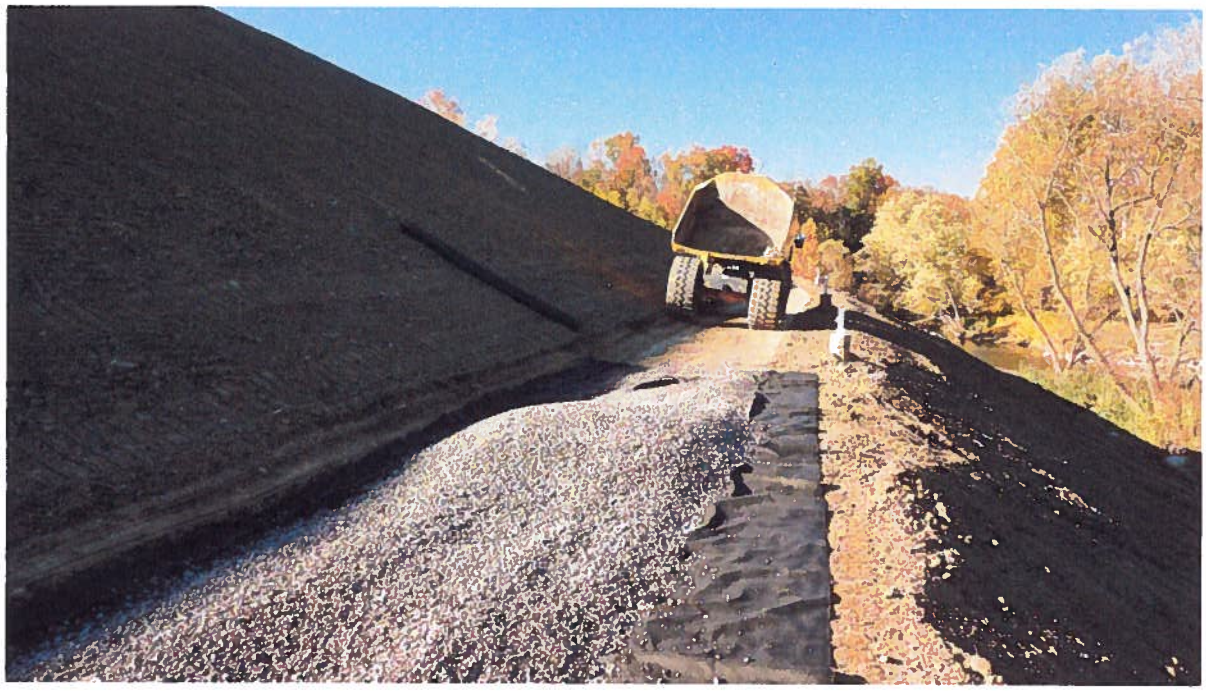

Placing No. 57 aggregate base for the Netpave® 50 along the Drivable Drainage Channel – Looking north

PHASE 2 REMEDIAL ACTION
FORD ROAD LANDFILL

WEEKLY PROGRESS MEETING MINUTES
OCTOBER 16, 2012

NEXT WEEKLY PROGRESS MEETING

The next Weekly Progress Meeting will be on Tuesday, October 23, 2012 at 1:00 pm at the Site trailer.

For those who need to attend remotely, please use the following call in information:

Telephone N NON-RESPONSIVE
Password: [redacted]

PHASE 2 REMEDIAL ACTION
FORD ROAD LANDFILL

WEEKLY PROGRESS MEETING MINUTES
OCTOBER 9, 2012

The Weekly Progress Meeting began at 1:00 pm on Tuesday, October 9, 2012. The following parties were present:

Pat Steerman – PRP Group (via telephone)
Joe Montello – PRP Group (via telephone)
Demaree Collier – U.S. EPA (via telephone)
Bill Frederick – U.S. ACE (via telephone)
Vanessa Steigerwald – Ohio EPA (via telephone)
Clarissa Gereby – Ohio EPA (via telephone)
Brian Holmes – Metro Parks Service
David Miller – Haynes Construction
Bill Foster – Brown and Caldwell

The meeting was initiated by Bill Foster. The following topics were discussed during the meeting:

HEALTH AND SAFETY

Personal Protective Equipment – High visibility shirt/vest, long pants, hard hat, safety glasses, steel toe boots are required for all personnel and visitors to the site.

No issues, near misses, or accidents to report.

GENERAL DISCUSSION

A generator was stolen over the weekend.

PROJECT WORK – OCTOBER 2, 2012 THROUGH OCTOBER 9, 2012 – The following work activities were performed during the past one week plus period:

- Completed loading, transporting, placing, grading, and compacting soil from the Grobe Fruit Farm borrow area for the Steep Slope Area soil buttress.
- Haynes Construction continued placing topsoil on the Steep Slope Area from the south end of the soil buttress progressing to the north.
- Inspection and maintenance of the erosion and sediment controls – silt fence and straw bales.
- The protective casings and concrete pads were installed for the seven new groundwater monitoring wells.

PROJECTED WORK – OCTOBER 10, 2012 THROUGH OCTOBER 16, 2012 – The following work activities are anticipated to be performed during the next one week period:

- Haynes Construction will complete placement of topsoil on the Steep Slope Area soil buttress slopes and the Upper Surface Area.
- The landscape subcontractor will mobilize to the Site on Monday, October 15, 2012.
  - Brown and Caldwell will keep the Project Team members up-to-date with the actual day when the FlexTerra and Green Armor system will be initiated.

PHASE 2 REMEDIAL ACTION
FORD ROAD LANDFILL

WEEKLY PROGRESS MEETING MINUTES
OCTOBER 9, 2012

- Haynes Construction will have the surveyor start the final site field surveying.

SUBMITTALS: No submittals were received during the past one week period; the chain link fence and gates is the only outstanding submittal.

PROJECT SCHEDULE:

Haynes Construction indicated the revised Substantial Completion date of October 19, 2012.

COMPLAINTS RECEIVED

No complaints were received – U.S. EPA, Ohio EPA, Metro Parks Service, the Site, or Brown and Caldwell.

COMMENTS/QUESTIONS/ISSUES/CONCERNS

Final Inspection.

A discussion was held regarding the final inspection for the Remedial Action work. The final inspection needs to occur by the end of the calendar year 2012. Demaree Collier of the U.S. EPA indicated late November (after Thanksgiving) or early December would be the best time to schedule the final inspection for her. U.S. EPA to propose a date(s) to perform the final inspection and Brown and Caldwell will obtain concurrence from the Project Team Members for participation in the final inspection.

Operations and Maintenance (O&M) Plan.

A discussion was held related to revision of the O&M Plan related to the seven new groundwater monitoring wells. Brown and Caldwell will update the O&M Plan to include a figure showing the locations of the seven new groundwater monitoring wells and boring logs/well completion diagrams. The updated O&M Plan will be submitted to the U.S. EPA.

RESOLUTIONS OF COMMENTS/QUESTIONS/ISSUES/CONCERNS

Seeding Parks Service Soil Borrow Area.

Resolved.

NEXT WEEKLY PROGRESS MEETING

The next Weekly Progress Meeting will be on Tuesday, October 16, 2012 at 1:00 pm at the Site trailer.

For those who need to attend remotely, please use the following call in information:

Telephone Nu NON-RESPONSIVE
Password: [redacted]

PROGRESS PHOTOS

Completed Steep Slope Area soil buttress (north end) – Looking south.

Completed Upper Surface Area final cover system at northeast corner – Looking south.

Upper surface water drainage swale from north to south – Looking northeast

Final grading of the Steep Slope Area soil buttress – Looking south

PHASE 2 REMEDIAL ACTION
FORD ROAD LANDFILL

WEEKLY PROGRESS MEETING MINUTES
OCTOBER 2, 2012

The Weekly Progress Meeting began at 1:00 pm on Tuesday, October 2, 2012. The following parties were present:

Pat Steerman – PRP Group (via telephone)
Joe Montello – PRP Group (via telephone)
Demaree Collier – U.S. EPA (via telephone)
Bill Frederick – U.S. ACE (via telephone)
Vanessa Steigerwald – Ohio EPA (via telephone)
Brian Holmes – Metro Parks Service
Paul Miller – Haynes Construction
Bill Foster – Brown and Caldwell
Rick Isaac – Brown and Caldwell

The meeting was initiated by Rick Isaac. The following topics were discussed during the meeting:

HEALTH AND SAFETY

Personal Protective Equipment – High visibility shirt/vest, long pants, hard hat, safety glasses, steel toe boots are required for all personnel and visitors to the site.

No issues, near misses, or accidents to report.

GENERAL DISCUSSION

No topics discussed for this reporting period.

PROJECT WORK – SEPTEMBER 26, 2012 THROUGH OCTOBER 2, 2012 – The following work activities were performed during the past one week plus period:

- Continued loading, transporting, placing, grading, and compacting soil from the Grobe Fruit Farm borrow area for the Steep Slope Area soil buttress.
- Haynes placed topsoil material on approximately three quarters of the Upper Surface Area. Topsoil was also placed on the Steep Slope Area from the south end of the soil buttress progressing to the north approximately half way to the Sedimentation Basin berm. Haynes Construction has all the required topsoil on the Site.
- Haynes Construction completed placement of the stone aggregate material at the Sedimentation Basin principal spillway outlet.
- Inspection and maintenance of the erosion and sediment controls – silt fence and straw bales.
- The seven new groundwater monitoring wells have been installed. All the groundwater monitoring wells (seven new and three existing) have been developed/re-developed.

PROJECTED WORK – OCTOBER 3, 2012 THROUGH OCTOBER 9, 2012 – The following work activities are anticipated to be performed during the next one week period:

- Complete loading, transporting, placing, grading, and compacting soil from the Grobe Fruit Farm borrow area for the Steep Slope Area soil buttress.

PHASE 2 REMEDIAL ACTION
FORD ROAD LANDFILL

WEEKLY PROGRESS MEETING MINUTES
OCTOBER 2, 2012

- Haynes Construction will continue placement of topsoil on the Steep Slope Area soil buttress slopes including the installation of the FlexTerra and Green Armor system.
  - Brown and Caldwell will keep the Project Team members up-to-date with the actual day when the FlexTerra and Green Armor system will be initiated.
- SUBMITTALS – No submittals were received during the past one week period.

PROJECT SCHEDULE:

Haynes Construction indicated the revised Substantial Completion date of October 19, 2012. Haynes Construction is planning on worked on Saturday, September 29, 2012 and is planning on working on Saturday, October 6, 2012; depending on weather.

COMPLAINTS RECEIVED

No complaints were received – U.S. EPA, Ohio EPA, the Site, or Brown and Caldwell.

Brian Holmes of the Metro Parks Service indicated that there was mud on Ford Road today. Haynes Construction indicated that they moved equipment from the Site on Tuesday. Haynes Construction will have the mud cleaned off of Ford Road today. Brian indicated that the Metro Parks Services has not received any complaints related to the truck traffic.

COMMENTS/QUESTIONS/ISSUES/CONCERNS

Seeding Parks Service Soil Borrow Area.

Brian Holmes verified the Parks Service soil borrow area will be seeded when the Upper Surface Area at the Site is seeded.

RESOLUTIONS OF COMMENTS/QUESTIONS/ISSUES/CONCERNS

Additional Willow Planting.

Resolved.

NEXT WEEKLY PROGRESS MEETING

The next Weekly Progress Meeting will be on Tuesday, October 9, 2012 at 1:00 pm at the Site trailer.

For those who need to attend remotely, please use the following call in information:

Telephone Nu NON-RESPONSIVE
Password: [redacted]

PHASE 2 REMEDIAL ACTION
FORD ROAD LANDFILL

WEEKLY PROGRESS MEETING MINUTES
OCTOBER 2, 2012

PROGRESS PHOTOS

Grading soil to tie-in Steep Slope Area soil buttress – Looking northeast.

Grading to install the diversion channel at the northeast corner – Looking southeast.

Completed Steep Slope soil buttress material – Looking northeast

Topsoil placement on south end of the Steep Slope soil buttress – Looking northeast

PHASE 2 REMEDIAL ACTION
FORD ROAD LANDFILL

WEEKLY PROGRESS MEETING MINUTES
SEPTEMBER 25, 2012

The Weekly Progress Meeting began at 1:00 pm on Tuesday, September 25, 2012. The following parties were present:

Pat Steerman – PRP Group (via telephone)
Joe Montello – PRP Group (via telephone)
Demaree Collier – U.S. EPA (via telephone)
Bill Frederick – U.S. ACE (via telephone)
Vanessa Steigerwald – Ohio EPA (via telephone)
Clarissa Gereby – Ohio EPA
Paul Miller – Haynes Construction
Bill Foster – Brown and Caldwell
Rick Isaac – Brown and Caldwell

The meeting was initiated by Rick Isaac. The following topics were discussed during the meeting:

HEALTH AND SAFETY

Personal Protective Equipment – High visibility shirt/vest, long pants, hard hat, safety glasses, steel toe boots are required for all personnel and visitors to the site.

No issues, near misses, or accidents to report.

GENERAL DISCUSSION

No topics discussed for this reporting period.

PROJECT WORK – SEPTEMBER 19, 2012 THROUGH SEPTEMBER 25, 2012 – The following work activities were performed during the past one week plus period:

- Continued loading, transporting, placing, grading, and compacting soil from the Grobe Fruit Farm borrow area for the Steep Slope Area soil buttress.
- Haynes placed topsoil material in the northeast corner of the Upper Surface Area and on the outer slope of the Sedimentation Basin berm.
- Inspection and maintenance of the erosion and sediment controls – silt fence and straw bales.
- The drillers are onsite and completed one of the replacement groundwater monitoring wells, MW-4; a second replacement groundwater monitoring well was started and will be completed on September 25, 2012.

PROJECTED WORK – SEPTEMBER 26, 2012 THROUGH OCTOBER 2, 2012 – The following work activities are anticipated to be performed during the next one week period:

- Continue loading, transporting, placing, grading, and compacting soil from the Grobe Fruit Farm borrow area for the Steep Slope Area soil buttress.
  - The required buttress soil will be on site and the tie-in with the Upper Surface Area final cover system cap will be completed.

- Haynes Construction will initiate placement of topsoil on the Steep Slope Area soil buttress slopes including the installation of the FlexTerra and Green Armor system.
  - Brown and Caldwell will keep the Project Team members up-to-date with the actual day when the FlexTerra and Green Armor system will be initiated.
- SUBMITTALS – No submittals were received during the past one week period.

PROJECT SCHEDULE:

Haynes Construction provided a revised Project Schedule which shows the Substantial Completion date of October 12, 2012. There were two rain days over the last week of work and Haynes Construction indicated that work on Saturday has been considered for the past four Saturdays; however, no work was possible due to rain. Haynes Construction is planning on working Saturday, September 29, 2012; however, rain is forecast for that day.

COMPLAINTS RECEIVED

No complaints were received – U.S. EPA, Ohio EPA, the Site, or Brown and Caldwell.

COMMENTS/QUESTIONS/ISSUES/CONCERNS

Additional Willow Planting.

A question was asked regarding the status of the additional willow planting. The PRP Group and the U.S. EPA agree that additional willow planting will be performed. The additional willow planting will occur within the river floodplain to the south of the riprap area in conjunction with placing larger rocks intermittently along the toe of the soil buttress. The best time to order the willow stakes is after November 1 and the "planting" can be performed from November 1 through April 30. A decision will be made regarding whether to place an order prior to November 1.

A statement was made that the additional willow planting is not part of the original plan for the Site. The PRP Group has agreed to the additional willow planting, but there will be no maintenance performed and the additional willow planting will not be part of the long-term O&M for the Site.

RESOLUTIONS OF COMMENTS/QUESTIONS/ISSUES/CONCERNS

Advance Notice for FlexTerra Installation.

Resolved. Brown and Caldwell will keep the Project Team members up-to-date with the actual day when the FlexTerra and Green Armor system will be initiated.

PHASE 2 REMEDIAL ACTION
FORD ROAD LANDFILL

WEEKLY PROGRESS MEETING MINUTES
SEPTEMBER 25, 2012

PROGRESS PHOTOS

Steep Slope Area soil buttress in place at the south side – Looking northeast.

Compactor entering fill bench of the Steep Slope Area soil buttress – Looking northeast.

PHASE 2 REMEDIAL ACTION
FORD ROAD LANDFILL

WEEKLY PROGRESS MEETING MINUTES
SEPTEMBER 25, 2012

Placing and grading Steep Slope soil buttress material – Looking north

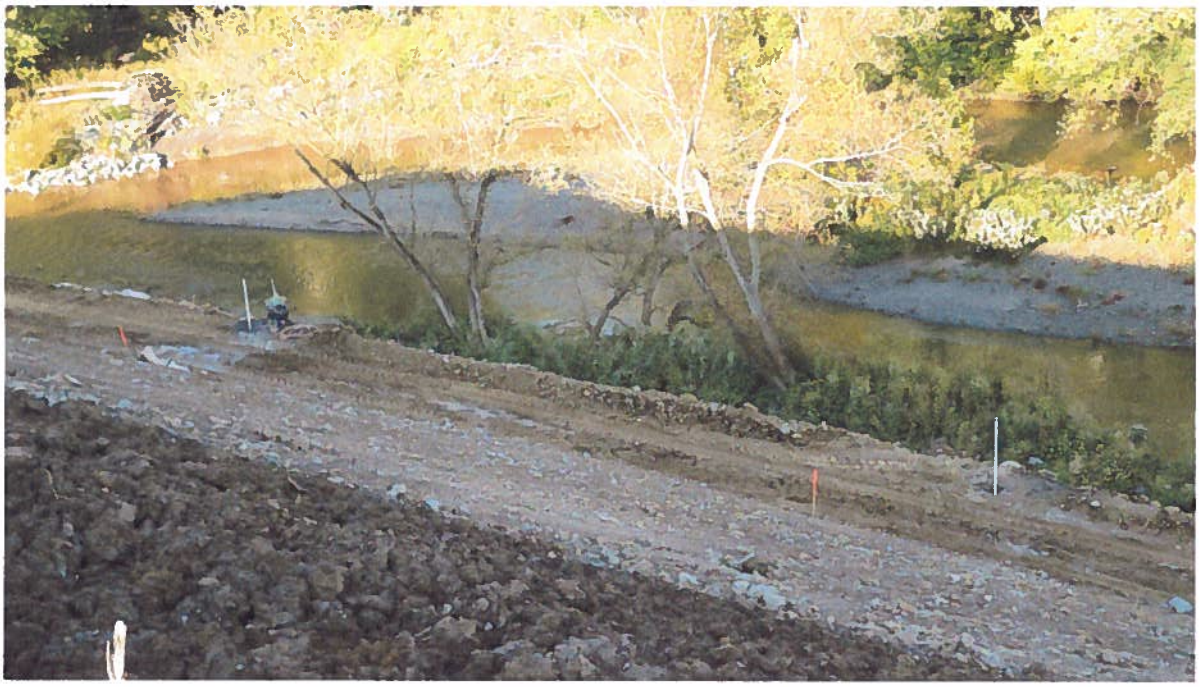

Replacement groundwater monitoring wells – Looking east

Brown AND Caldwell

PHASE 2 REMEDIAL ACTION
FORD ROAD LANDFILL

WEEKLY PROGRESS MEETING MINUTES
SEPTEMBER 25, 2012

NEXT WEEKLY PROGRESS MEETING

The next Weekly Progress Meeting will be on Tuesday, October 2, 2012 at 1:00 pm at the Site trailer.

For those who need to attend remotely, please use the following call in information:

Telephone Nu NON-RESPONSIVE
Password: [redacted]

PHASE 2 REMEDIAL ACTION
FORD ROAD LANDFILL

WEEKLY PROGRESS MEETING MINUTES
SEPTEMBER 18, 2012

The Weekly Progress Meeting began at 1:00 pm on Tuesday, September 18, 2012. The following parties were present:

Joe Montello – PRP Group (via telephone)
Demaree Collier – U.S. EPA (via telephone)
Bill Frederick – U.S. ACE (via telephone)
Vanessa Steigerwald – Ohio EPA (via telephone)
Paul Miller – Haynes Construction (via telephone)
Bill Foster – Brown and Caldwell (via telephone)
Rick Isaac – Brown and Caldwell (via telephone

The meeting was initiated by Rick Isaac. The following topics were discussed during the meeting:

HEALTH AND SAFETY

Personal Protective Equipment – High visibility shirt/vest, long pants, hard hat, safety glasses, steel toe boots are required for all personnel and visitors to the site.

No issues, near misses, or accidents to report.

GENERAL DISCUSSION

No topics discussed for this reporting period.

PROJECT WORK – SEPTEMBER 12, 2012 THROUGH SEPTEMBER 18, 2012 – The following work activities were performed during the past one week plus period:

- Continued loading, transporting, placing, grading, and compacting soil from the Grobe Fruit Farm borrow area for the Steep Slope Area soil buttress.
- Removed designated trees along Ford Road.
  - There is still a "tree screen" available along Ford Road; no large blank areas. The "tree screen" will vary when the remaining trees drop their leaves this fall.
- Removed and stockpiled topsoil along Ford Road for completion of the final cover system cap.
- Graded/placed and compacted low permeability soil from the onsite stockpiles to complete the final cover system cap along Ford Road where the trees were removed.
- Inspection and maintenance of the erosion and sediment controls – silt fence and straw bales.

PROJECTED WORK – SEPTEMBER 19, 2012 THROUGH SEPTEMBER 25, 2012 – The following work activities are anticipated to be performed during the next one week period:

- Continue loading, transporting, placing, grading, and compacting soil from the Grobe Fruit Farm borrow area for the Steep Slope Area soil buttress.
  - Anticipate having required buttress soil on site and making the tie-in with the Upper Surface Area final cover system cap.

PHASE 2 REMEDIAL ACTION
FORD ROAD LANDFILL

WEEKLY PROGRESS MEETING MINUTES
SEPTEMBER 18, 2012

- Initiate loading and transporting topsoil from the Grobe Fruit Farm borrow area to the Site.

SUBMITTALS – No submittals were received during the past one week period.

PROJECT SCHEDULE:

Haynes Construction indicated the work is behind schedule by several days due to recent rain events. Haynes Construction, at the request of Brown and Caldwell, is preparing an updated project schedule to show the current status of the work. The updated project schedule will be submitted to Brown and Caldwell.

COMPLAINTS RECEIVED

No complaints were received – U.S. EPA, Ohio EPA, the Site, or Brown and Caldwell.

COMMENTS/QUESTIONS/ISSUES/CONCERNS

Advance Notice for FlexTerra Installation.

A statement was made asking for advance notice related to the initiation of the FlexTerra installation.

RESOLUTIONS OF COMMENTS/QUESTIONS/ISSUES/CONCERNS

None to discuss.

NEXT WEEKLY PROGRESS MEETING

The next Weekly Progress Meeting will be on Tuesday, September 25, 2012 at 1:00 pm at the Site trailer.

For those who need to attend remotely, please use the following call in information:

Telephone Nu NON-RESPONSIVE
Password: [redacted]

PHASE 2 REMEDIAL ACTION
FORD ROAD LANDFILL

WEEKLY PROGRESS MEETING MINUTES
SEPTEMBER 18, 2012

PROGRESS PHOTOS

Steep Slope Area soil buttress in place at the south side – Looking northeast.

Steep Slope Area soil buttress in place at the north side – Looking south.

Final cover system cap along Ford Road – Looking north

Final cover system cap along Ford Road – Looking south

PHASE 2 REMEDIAL ACTION
FORD ROAD LANDFILL

WEEKLY PROGRESS MEETING MINUTES
SEPTEMBER 11, 2012

The Weekly Progress Meeting began at 1:00 pm on Tuesday, September 11, 2012. The following parties were present:

Pat Steerman – PRP Group (via telephone)
Joe Montello – PRP Group (via telephone)
Bill Frederick – U.S. ACE (via telephone)
Vanessa Steigerwald – Ohio EPA (via telephone)
Clarissa Gereby – Ohio EPA
David Miller – Haynes Construction
Bill Foster – Brown and Caldwell
Rick Isaac – Brown and Caldwell (via telephone)

The meeting was initiated by Rick Isaac. The following topics were discussed during the meeting:

HEALTH AND SAFETY

Personal Protective Equipment – High visibility shirt/vest, long pants, hard hat, safety glasses, steel toe boots are required for all personnel and visitors to the site.

No issues, near misses, or accidents to report.

GENERAL DISCUSSION

None indication or signs of outsiders trying to break into the office and/or equipment has been noticed to date.

PROJECT WORK – SEPTEMBER 5, 2012 THROUGH SEPTEMBER 11, 2012 – The following work activities were performed during the past one week plus period:

- Continued loading, transporting, placing, grading, and compacting soil from the Grobe Fruit Farm borrow area for the Steep Slope Area soil buttress.
- Inspection and maintenance of the erosion and sediment controls – silt fence and straw bales.

PROJECTED WORK – SEPTEMBER 12, 2012 THROUGH SEPTEMBER 18, 2012 – The following work activities are anticipated to be performed during the next one week period:

- Continue loading, transporting, placing, grading, and compacting soil from the Grobe Fruit Farm borrow area for the Steep Slope Area soil buttress.
- Haynes Construction's subcontractor will be onsite to remove the designated trees along Ford Road.

SUBMITTALS – No submittals were received during the past one week period.

PROJECT SCHEDULE:

Haynes Construction indicated that by the middle of next week, September 17, 2012, the Steep Slope buttress soil will be onsite.

Following removal of the designated trees along Ford Road, Haynes will strip the available topsoil and begin to place the low permeability soil to complete the Upper Surface Area final

cover system cap. This work will be performed as time allows based on the continued placement of Steep Slope buttress soil.

COMPLAINTS RECEIVED

No complaints were received – U.S. EPA, Ohio EPA, the Site, or Brown and Caldwell.

COMMENTS/QUESTIONS/ISSUES/CONCERNS

None were discussed.

RESOLUTIONS OF COMMENTS/QUESTIONS/ISSUES/CONCERNS

Seeding – Maintenance Garage Stockpile.

Resolved. Haynes Construction will seed in conjunction with the permanent seeding of the Upper Surface Area final cover system cap.

Condition of Willow Stakes.

Resolved. A draft plan to install additional willow stakes within the Black River floodplain south of the riprap area was developed and is being reviewed by the PRP Group.

Replacement Groundwater Monitoring Wells

Resolved. The new (replacement) groundwater monitoring wells (wells) will be installed beginning on Monday, September 24, 2012;icipated field time is four days depending on weather. The seven new wells will be developed and the existing three wells, MW-5, MW-6, and MW-7, will also be re-developed following installation of the new wells. Rick Isaac of Brown and Caldwell will keep the Project Team informed if any changes occur in the schedule.

NEXT WEEKLY PROGRESS MEETING

The next Weekly Progress Meeting will be on Tuesday, September 18, 2012 at 1:00 pm at the Site trailer.

For those who need to attend remotely, please use the following call in information:

Telephone Nu NON-RESPONSIVE
Password: [redacted]

PHASE 2 REMEDIAL ACTION
FORD ROAD LANDFILL

WEEKLY PROGRESS MEETING MINUTES
SEPTEMBER 11, 2012

PROGRESS PHOTOS

Steep Slope Area soil buttress: River floodplain, Drivable Drainage Channel, active fill bench, and Upper Surface Area from left to right – Looking south.

Designated trees removed along Ford Road – Looking south.

PHASE 2 REMEDIAL ACTION
FORD ROAD LANDFILL

WEEKLY PROGRESS MEETING MINUTES
SEPTEMBER 4, 2012

The Weekly Progress Meeting began at 1:00 pm on Tuesday, September 4, 2012. The following parties were present:

Pat Steerman – PRP Group (via telephone)
Joe Montello – PRP Group (via telephone)
Demaree Collier – U.S. EPA (via telephone)
Bill Frederick – U.S. ACE (via telephone)
Vanessa Steigerwald – Ohio EPA (via telephone)
Clarissa Gereby – Ohio EPA (via telephone)
Brian Holmes – Metro Parks Service
David Miller – Haynes Construction
Bill Foster – Brown and Caldwell
Rick Isaac – Brown and Caldwell (via telephone)

The meeting was initiated by Rick Isaac. The following topics were discussed during the meeting:

HEALTH AND SAFETY

Personal Protective Equipment – High visibility shirt/vest, long pants, hard hat, safety glasses, steel toe boots are required for all personnel and visitors to the site.

No issues, near misses, or accidents to report.

GENERAL DISCUSSION

Brian Holmes of the Metro Parks Service indicated that a construction project on I-90 had a break in. Cautioned about leaving valuables onsite.

PROJECT WORK – AUGUST 29, 2012 THROUGH SEPTEMBER 4, 2012 – The following work activities were performed during the past one week plus period:

- Continued loading, transporting, placing, grading, and compacting soil from the Grobe Fruit Farm borrow area for the Steep Slope Area soil buttress.
- Haynes Construction poured the concrete anchor pad for the CMP riser a minimum of six-inches above the bottom of the riser pipe.
- Inspection and maintenance of the erosion and sediment controls – silt fence and straw bales.

PROJECTED WORK – SEPTEMBER 5, 2012 THROUGH SEPTEMBER 11, 2012 – The following work activities are anticipated to be performed during the next one week period:

- Continue loading, transporting, placing, grading, and compacting soil from the Grobe Fruit Farm borrow area for the Steep Slope Area soil buttress.
- Haynes Construction will schedule the tree removal along Ford Road for those trees marked to be removed.

SUBMITTALS – No submittals were received during the past one week plus period.

PHASE 2 REMEDIAL ACTION
FORD ROAD LANDFILL

WEEKLY PROGRESS MEETING MINUTES
SEPTEMBER 4, 2012

PROJECT SCHEDULE:

Haynes Construction indicated that the intent is to have all soil onsite by the end of next week, September 14, 2012 dependent upon weather. The topsoil placement will begin when the soil material has been placed.

Haynes Construction will leave the office trailer in place and will move the Conex box in order to complete the Upper Surface Area final cover system cap following tree removal along Ford Road.

COMPLAINTS RECEIVED

No complaints were received – U.S. EPA, Ohio EPA, the Site, the Metro Parks Service, or Brown and Caldwell.

COMMENTS/QUESTIONS/ISSUES/CONCERNS

Seeding – Maintenance Garage Stockpile.

Brian Holmes of the Metro Parks Service asked when the soil stockpile area behind the Maintenance Garage would be seeded.

Condition of Willow Stakes.

Demaree Collier of the U.S. EPA asked how the willow stakes planted at the top of the riprap associated with the former North Soil Removal Area are doing. Is there a need to replace willow stakes that are not doing well or are determined to be dead?

Replacement Groundwater Monitoring Wells

Vanessa Steigerwald asked if there was a figure depicting where the replacement groundwater monitoring wells (wells) will be located. Joe Montello of the PRP Group and Rick Isaac of Brown and Caldwell walked the area where the wells will be located; the locations will be such that the wells are out of the 100-year floodplain of the Black River. The timing will be within the next several weeks so no damage to the Green Armor/Flexterra occurs. Pat Steerman will send a figure to the Project Team members later today.

RESOLUTIONS OF COMMENTS/QUESTIONS/ISSUES/CONCERNS

Notification of Initiation of Flexterra Installation.

Resolved. Brown and Caldwell will provide advance notification of when the installation of the Flexterra will be initiated.

PHASE 2 REMEDIAL ACTION
FORD ROAD LANDFILL

WEEKLY PROGRESS MEETING MINUTES
SEPTEMBER 4, 2012

PROGRESS PHOTOS

Steep Slope Area soil buttress – Looking north.

NEXT WEEKLY PROGRESS MEETING

The next Weekly Progress Meeting will be on Tuesday, September 11, 2012 at 1:00 pm at the Site trailer.

For those who need to attend remotely, please use the following call in information:

Telephone N[redacted]
Password: [redacted]

PHASE 2 REMEDIAL ACTION
FORD ROAD LANDFILL

WEEKLY PROGRESS MEETING MINUTES
AUGUST 28, 2012

The Weekly Progress Meeting began at 1:00 pm on Tuesday, August 28, 2012. The following parties were present:

Pat Steerman – PRP Group (via telephone)
Joe Montello – PRP Group
Bill Frederick – U.S. ACE (via telephone)
Vanessa Steigerwald – Ohio EPA (via telephone)
David Miller – Haynes Construction
Bill Foster – Brown and Caldwell
Rick Isaac – Brown and Caldwell

The meeting was initiated by Rick Isaac. The following topics were discussed during the meeting:

HEALTH AND SAFETY

Personal Protective Equipment – High visibility shirt/vest, long pants, hard hat, safety glasses, steel toe boots are required for all personnel and visitors to the site.

No issues, near misses, or accidents to report.

GENERAL DISCUSSION

The Site received 1-1/4 inches of rain on Monday, August 27, 2012 resulting a rain day. The biggest effect of the rain is increased moisture content of the soil fill material. The soil fill material is spread out on the Upper Surface Area, allowed to dry, and transported to the active lift using self-loading scrapers.

PROJECT WORK – AUGUST 22, 2012 THROUGH AUGUST 28, 2012 – The following work activities were performed during the past one week plus period:

- Continued loading, transporting, placing, grading, and compacting soil from the Grobe Fruit Farm borrow area for the Steep Slope Area soil buttress.
- The principal spillway structure, CMP riser and CMP barrel pipe were installed in the Sedimentation Basin. The principal spillway structure functioned properly during the storm event on August 27, 2012.
  - Haynes Construction will pour the concrete anchor pad for the CMP riser a minimum of six-inches above the bottom of the riser pipe.
- Inspection and maintenance of the erosion and sediment controls – silt fence and straw bales.

PROJECTED WORK – AUGUST 29, 2012 THROUGH SEPTEMBER 4, 2012 – The following work activities are anticipated to be performed during the next one week period:

- Continue loading, transporting, placing, grading, and compacting soil from the Grobe Fruit Farm borrow area for the Steep Slope Area soil buttress.

PHASE 2 REMEDIAL ACTION
FORD ROAD LANDFILL

WEEKLY PROGRESS MEETING MINUTES
AUGUST 28, 2012

SUBMITTALS – No submittals were received during the past one week plus period.

PROJECT SCHEDULE:

Haynes Construction indicated that the intent is to complete the major earthwork by the end of the first week in September; no effect due to rain at this point, but a continuation of storm events may begin to affect the overall project schedule. Haynes Construction will consider working on Saturdays; however, there will be no work this Saturday, September 1, 2012.

Any effect on the project schedule due to Hurricane Isaac will be accessed next week.

COMPLAINTS RECEIVED

No complaints were received – U.S. EPA, Ohio EPA, the Site, or Brown and Caldwell; no information was available from the Metro Parks Service.

COMMENTS/QUESTIONS/ISSUES/CONCERNS

Notification of Initiation of Flexterra Installation.

Vanessa Steigerwald of the Ohio EPA asked to be given advance notification of when the installation of the Flexterra would be initiated.

RESOLUTIONS OF COMMENTS/QUESTIONS/ISSUES/CONCERNS

Metro Parks Service Soil Stockpile Field Survey.

- Rick Isaac of Brown and Caldwell will send an e-mail to Pat Steerman of the PRP Group indicating that the Metro Parks Service invoice for the stockpile soil material is in order and approved for payment.

NEXT WEEKLY PROGRESS MEETING

The next Weekly Progress Meeting will be on Tuesday, September 4, 2012 at 1:00 pm at the Site trailer.

For those who need to attend remotely, please use the following call in information:

Telephone Nu NON-RESPONSIVE
Password: [redacted]

PHASE 2 REMEDIAL ACTION
FORD ROAD LANDFILL

WEEKLY PROGRESS MEETING MINUTES
AUGUST 28, 2012

PROGRESS PHOTOS

Steep Slope Area soil buttress south end – Looking north.

Steep Slope Area soil buttress w/Drivable Drainage Channel in foreground – Looking north.

Spreading and loading soil material for the Steep Slope Area soil buttress.

Sedimentation Basin principal spillway riser pipe w/concrete anchor pad.

PHASE 2 REMEDIAL ACTION
FORD ROAD LANDFILL

WEEKLY PROGRESS MEETING MINUTES
AUGUST 21, 2012

The Weekly Progress Meeting began at 1:00 pm on Tuesday, August 21, 2012. The following parties were present:

Pat Steerman – PRP Group (via telephone)
Demaree Collier – U.S. EPA (via telephone)
Clarissa Gereby – Ohio EPA
Brian Holmes – Metro Parks Service
David Miller – Haynes Construction
Bill Foster – Brown and Caldwell
Rick Isaac – Brown and Caldwell (via telephone)

The meeting was initiated by Rick Isaac. The following topics were discussed during the meeting:

HEALTH AND SAFETY

Personal Protective Equipment – High visibility shirt/vest, long pants, hard hat, safety glasses, steel toe boots are required for all personnel and visitors to the site.

No issues, near misses, or accidents to report.

GENERAL DISCUSSION

Bill Foster and Bill Frederick of the U.S. Army Corps of Engineers talk about the project at least once per week.

Rick Isaac of Brown and Caldwell contacted the Wastewater/Engineering Departments of the City of Elyria and obtained a spreadsheet of the analytical results related to the north seep on Monday, August 27, 2012. Brown and Caldwell will have the analytical results reviewed by our wastewater and IWQ personnel and report back to the Project Team following the review.

PROJECT WORK – AUGUST 15, 2012 THROUGH AUGUST 21, 2012 – The following work activities were performed during the past one week plus period:

- Continued loading, transporting, placing, grading, and compacting soil from the Grobe Fruit Farm borrow area for the Steep Slope Area soil buttress.
  - Haynes Construction has increased the number of trucks in the circuit transporting the soil to the Site.
  - Haynes Construction is using scrapers to take soil dumped at the crest of the Steep Slope Area to move this soil to the active fill location – this minimizes the onsite wait time for the trucks.
- Inspection and maintenance of the erosion and sediment controls – silt fence and straw bales.

PHASE 2 REMEDIAL ACTION
FORD ROAD LANDFILL

WEEKLY PROGRESS MEETING MINUTES
AUGUST 21, 2012

PROJECTED WORK – AUGUST 22, 2012 THROUGH AUGUST 28, 2012 – The following work activities are anticipated to be performed during the next one week period:

- Continue loading, transporting, placing, grading, and compacting soil from the Grobe Fruit Farm borrow area for the Steep Slope Area soil buttress.
  - Haynes Construction indicated that this work will continue for the next several weeks.

SUBMITTALS – Submittal status during the past one week plus period:

- Submittal No. 7 (Wattle materials) – Returned for amendment and re-submittal.
- Submittal No. 8B – (HP-FGM materials) – Returned; previously submitted on June 28, 2012.

PROJECT SCHEDULE:

Haynes Construction indicated that the intent is to complete the major earthwork by the last week in August to the first week in September; no effect due to rain at this point. Haynes Construction will consider working on Saturdays, if the rain days start to become an issue.

As stated under "Project Work", Haynes Construction has increased the number of trucks in the circuit to increase the production.

COMPLAINTS RECEIVED

No complaints were received – U.S. EPA, Ohio EPA, Metro Parks Service, or Brown and Caldwell.

On Thursday, August 23, 2012, Tom Keys of the Ohio Department of Transportation (ODOT) local (Lorain County) facility stopped by the Site to fill out a complaint form related to an incident at the Grobe Fruit Farm soil borrow area, which is approximately five miles from the Site. A rock was thrown from a tire of one of the trucks which caused a vehicle following behind to swerve off of the road (This occurred approximately 200 to 300 yards from the borrow area entrance onto the road.). This individual called Mr. Keys to complain. Rick Isaac of Brown and Caldwell contacted Mr. Keys on Friday, August 24, 2012, to discuss this incident. Mr. Keys verified that the vehicle was not hit by the rock. Mr. Isaac told Mr. Keys that Brown and Caldwell would direct Haynes Construction to discuss this incident with the truck drivers to minimize the potential for this type of incident in the future. Haynes Construction has been periodically sweeping and spraying water at the Grobe Fruit Farm soil borrow area and will continue this practice until the soil transportation work is completed.

COMMENTS/QUESTIONS/ISSUES/CONCERNS

No comments/questions/issues/concerns where discussed.

PHASE 2 REMEDIAL ACTION
FORD ROAD LANDFILL

WEEKLY PROGRESS MEETING MINUTES
AUGUST 21, 2012

RESOLUTIONS OF COMMENTS/QUESTIONS/ISSUES/CONCERNS

Metro Parks Service Soil Stockpile Field Survey.

- Resolved. Brian Holmes of the Metro Parks Service indicated that an invoice for the soil material from the stockpile behind the Maintenance Garage was sent directly to Pat Steerman on August 15, 2012. Pat said he will check on delivery of the invoice. Brian will e-mail a copy of the invoice to Brown and Caldwell.

- NEXT WEEKLY PROGRESS MEETING

- The next Weekly Progress Meeting will be on Tuesday, August 28, 2012 at 1:00 pm at the Site trailer.

- For those who need to attend remotely, please use the following call in information:

- Telephone Nu NON-RESPONSIVE
- Password: [redacted]

PROGRESS PHOTOS

Sedimentation Basin principal spillway riser pipe with anti-vortex/trash rack.

Sedimentation Basin principal spillway outlet pipe with riprap apron being installed.

PHASE 2 REMEDIAL ACTION
FORD ROAD LANDFILL

WEEKLY PROGRESS MEETING MINUTES
AUGUST 14, 2012

The Weekly Progress Meeting began at 1:00 pm on Tuesday, August 14, 2012. The following parties were present:

Pat Steerman – PRP Group (via telephone)
Joe Montello – PRP Group (via telephone)
Demaree Collier – U.S. EPA (via telephone)
Vanessa Steigerwald-Dick – Ohio EPA (via telephone
Brian Holmes – Metro Parks Service
Paul Miller – Haynes Construction
Bill Foster – Brown and Caldwell
Rick Isaac – Brown and Caldwell (via telephone)

The meeting was initiated by Rick Isaac. The following topics were discussed during the meeting:

HEALTH AND SAFETY

Personal Protective Equipment – High visibility shirt/vest, long pants, hard hat, safety glasses, steel toe boots are now required for all personnel and visitors to the site.

No issues, near misses, or accidents to report.

GENERAL DISCUSSION

The City of Elyria Water Department appears to have fixed the water line leak south of the Site. No water is coming onto the Site from the direction of the water leak.

Rick Isaac of Brown and Caldwell will contact the Wastewater or Engineering Departments of the City of Elyria related to the north seep.

Haynes Construction will look at using scrapers to place the soil buttress as the soil placement "pinches" as the fill progresses up the slope.

Grass has been observed from the topsoil on the Sedimentation Basin berm.

PROJECT WORK – AUGUST 8, 2012 THROUGH AUGUST 14, 2012 – The following work activities were performed during the past one week plus period:

- Continued loading, transporting, placing, grading, and compacting soil from the Grobe Fruit Farm borrow area for the Steep Slope Area soil buttress.
- The Drivable Drainage Channel has been cut in and is functioning during and following rainfall events.
- Inspection and maintenance of the erosion and sediment controls – silt fence and straw bales.

PROJECTED WORK – AUGUST 15, 2012 THROUGH AUGUST 21, 2012 – The following work activities are anticipated to be performed during the next one week period:

- Continue loading, transporting, placing, grading, and compacting soil from the Grobe Fruit Farm borrow area for the Steep Slope Area soil buttress.

PHASE 2 REMEDIAL ACTION
FORD ROAD LANDFILL

WEEKLY PROGRESS MEETING MINUTES
AUGUST 14, 2012

SUBMITTALS – Submittal status during the past one week plus period:

No submittals were reviewed by Brown and Caldwell.

PROJECT SCHEDULE:

Haynes Construction indicated that the intent is to complete the major earthwork by the last week in August to the first week in September; however, the Substantial Completion may be about one week behind due to rain days on August 9, August 10, and August 14. Haynes Construction is considering working on Saturday, August 19, 2012 due to the rain days.

COMPLAINTS RECEIVED

No complaints were received – U.S. EPA, Ohio EPA, Metro Parks Service, at the Site, or Brown and Caldwell.

COMMENTS/QUESTIONS/ISSUES/CONCERNS

Metro Parks Service Soil Stockpile Field Survey.

- Brian Holmes of the Metro Parks Service inquired about the status of the field survey for the soil stockpile. Rick Isaac will check with Haynes Construction regarding the filed survey.

RESOLUTIONS OF COMMENTS/QUESTIONS/ISSUES/CONCERNS

North Site Access.

- Resolved. Ford Road at the North Access Road cleaned (swept and watered) and additional aggregate was placed at the construction entrance at the North Access Road by Haynes Construction.

NEXT WEEKLY PROGRESS MEETING

The next Weekly Progress Meeting will be on Tuesday, August 21, 2012 at 1:00 pm at the Site trailer.

For those who need to attend remotely, please use the following call in information:

Telephone N NON-RESPONSIVE
Password: [redacted]

PHASE 2 REMEDIAL ACTION
FORD ROAD LANDFILL

WEEKLY PROGRESS MEETING MINUTES
AUGUST 14, 2012

PROGRESS PHOTOS

Placing Steep Slope Buttress soil from the Grobe Fruit Farm – Looking south.

Black River form the Drivable Drainage Channel – Looking east

Steep Slope Area soil buttress with lower diversion cut into the Sedimentation Basin – Looking south.

Steep Slope Area soil buttress with Drivable Drainage Channel – Looking north.

PHASE 2 REMEDIAL ACTION
FORD ROAD LANDFILL

WEEKLY PROGRESS MEETING MINUTES
AUGUST 7, 2012

The Weekly Progress Meeting began at 1:00 pm on Tuesday, August 7, 2012. The following parties were present:

Pat Steerman – PRP Group (via telephone)
Demaree Collier – U.S. EPA (via telephone)
Bill Frederick – U.S. ACE (via telephone)
Vanessa Steigerwald-Dick – Ohio EPA
David Miller – Haynes Construction
Bill Foster – Brown and Caldwell
Rick Isaac – Brown and Caldwell

The meeting was initiated by Rick Isaac. The following topics were discussed during the meeting:

HEALTH AND SAFETY

Personal Protective Equipment – High visibility shirt/vest, long pants, hard hat, safety glasses, steel toe boots are now required for all personnel and visitors to the site.

No issues, near misses, or accidents to report.

GENERAL DISCUSSION

The City of Elyria Water Department is working on fixing the water line leak south of the Site.

No contact with the Wastewater or Engineering Departments related to the north seep.

PROJECT WORK – AUGUST 1, 2012 THROUGH AUGUST 7, 2012 – The following work activities were performed during the past one week plus period:

- Continued loading, transporting, placing, grading, and compacting soil from the Grobe Fruit Farm borrow area for the Steep Slope Area soil buttress.
- Initiated work on the lower southern diversion structure.
- Inspection and maintenance of the erosion and sediment controls – silt fence and straw bales.

PROJECTED WORK – AUGUST 8, 2012 THROUGH AUGUST 14, 2012 – The following work activities are anticipated to be performed during the next one week period:

- Continue loading, transporting, placing, grading, and compacting soil from the Grobe Fruit Farm borrow area for the Steep Slope Area soil buttress.

SUBMITTALS – Submittal status during the past one week plus period:

No submittals were reviewed by Brown and Caldwell.

PROJECT SCHEDULE:

Haynes Construction indicated that the overall project schedule is to complete the major earthwork by the last week in August to the first week in September.

The project is currently on schedule.

PHASE 2 REMEDIAL ACTION
FORD ROAD LANDFILL

WEEKLY PROGRESS MEETING MINUTES
AUGUST 7, 2012

COMPLAINTS RECEIVED

No complaints were received – U.S. EPA, Ohio EPA, at the Site, or Brown and Caldwell; no report from the Metro Parks Service was available.

COMMENTS/QUESTIONS/ISSUES/CONCERNS

North Site Access.

- Vanessa Steigerwald-Dick asked for Ford Road at the North Access Road to be cleaned and some additional aggregate to be placed at the construction entrance at the North Access Road.

RESOLUTIONS OF COMMENTS/QUESTIONS/ISSUES/CONCERNS

Storm Event on Saturday, July 28, 2012.

- Resolved. No issues related to the storm event.

NEXT WEEKLY PROGRESS MEETING

The next Weekly Progress Meeting will be on Tuesday, August 14, 2012 at 1:00 pm at the Site trailer.

For those who need to attend remotely, please use the following call in information:

Telephone N NON-RESPONSIVE
Password: [redacted]

PROGRESS PHOTOS

Steep Slope Buttress soil from the Grobe Fruit Farm.

Cleaning sediment from the Sedimentation Basin drainage ditch – Looking south

Sedimentation Basin drainage ditch – Looking north.

PHASE 2 REMEDIAL ACTION
FORD ROAD LANDFILL

WEEKLY PROGRESS MEETING MINUTES
JULY 31, 2012

The Weekly Progress Meeting began at 1:00 pm on Tuesday, July 31, 2012. The following parties were present:

Pat Steerman – PRP Group (via telephone)
Joe Montello – PRP Group (via telephone)
Demaree Collier – U.S. EPA (via telephone)
David Miller – Haynes Construction
Bill Foster – Brown and Caldwell
Rick Isaac – Brown and Caldwell (via telephone)

The meeting was initiated by Rick Isaac. The following topics were discussed during the meeting:

HEALTH AND SAFETY

Personal Protective Equipment – High visibility shirt/vest, long pants, hard hat, safety glasses, steel toe boots are now required for all personnel and visitors to the site.

No issues, near misses, or accidents to report.

GENERAL DISCUSSION

The City of Elyria Water Department is looking for a contractor to fix the water line leak south of the Site.

PROJECT WORK – JULY 25, 2012 THROUGH JULY 31, 2012 – The following work activities were performed during the past one week plus period:

- Completed loading, transporting, placing, grading, and compacting soil from the Camp Wahoo borrow area for the Upper Surface Area final cover system cap.
- Initiated loading, transporting, placing, grading, and compacting soil from the Grobe Fruit Farm borrow area for the Steep Slope Area soil buttress.
- Removed built-up sediment from the ditch east of the Sedimentation Basin berm.
- Inspection and maintenance of the erosion and sediment controls – silt fence and straw bales.

PROJECTED WORK – AUGUST 1, 2012 THROUGH AUGUST 7, 2012 – The following work activities are anticipated to be performed during the next one week period:

- Continue loading, transporting, placing, grading, and compacting soil from the Grobe Fruit Farm borrow area for the Steep Slope Area soil buttress.
- Install the principal spillway in the Sedimentation Basin.

SUBMITTALS – Submittal status during the past one week plus period:

- Submittal No. 10C (Permanent and temporary seed mix) – No Exceptions Taken.
- Submittal No. 5A – (Access road aggregate materials; LaFarge: 304 aggregate) - No Exceptions Taken.

PHASE 2 REMEDIAL ACTION
FORD ROAD LANDFILL

WEEKLY PROGRESS MEETING MINUTES
JULY 31, 2012

PROJECT SCHEDULE:

Haynes Construction indicated that the work is a little ahead of schedule. The overall project schedule is to complete the major earthwork by the last week in August to the first week in September.

The Site received approximately 2.5 inches of rain on Saturday, July 28, 2012; no schedule delays due to this storm event are anticipated.

COMPLAINTS RECEIVED

No complaints were received – U.S. EPA, Ohio EPA, or at the Site; no report from the Metro Parks Service was available.

COMMENTS/QUESTIONS/ISSUES/CONCERNS

Storm Event on Saturday, July 28, 2012.

- Comments were made by Bill Foster and David Miller that the Site handled the rainfall (approximately 2.5 inches) well; the fill areas were sealed to promote surface water runoff and minimize erosion and the erosion/sediment control features i.e. silt fence, straw bales, Sedimentation Basin functioned properly.

RESOLUTIONS OF COMMENTS/QUESTIONS/ISSUES/CONCERNS

Major Part of Construction Completion.

- Resolved. Baring any unforeseen weather delays, the major construction items i.e. Steep Slope Area soil buttress and Upper Surface Area final cover system are on track to be completed in approximately one month.

NEXT WEEKLY PROGRESS MEETING

The next Weekly Progress Meeting will be on Tuesday, August 7, 2012 at 1:00 pm at the Site trailer.

For those who need to attend remotely, please use the following call in information:

Telephone Nu NON-RESPONSIVE
Password: [redacted]

PHASE 2 REMEDIAL ACTION
FORD ROAD LANDFILL

WEEKLY PROGRESS MEETING MINUTES
JULY 31, 2012

PROGRESS PHOTOS

Initiation of the Drivable Drainage Channel (foreground) – Looking north.

Drivable Drainage Channel/Steep Slope Area soil buttress interface – Looking north

Steep Slope Area soil buttress at north end of the Sedimentation Basin – Looking south.

Continuing to place fill for the Steep Slope Area soil buttress – Looking south

PHASE 2 REMEDIAL ACTION
FORD ROAD LANDFILL

WEEKLY PROGRESS MEETING MINUTES
JULY 24, 2012

The Weekly Progress Meeting began at 1:00 pm on Tuesday, July 24, 2012. The following parties were present:

Pat Steerman – PRP Group (via telephone)	Brian Holmes – Metro Parks Service
Joe Montello – PRP Group (via telephone)	David Miller – Haynes Construction
Demaree Collier – U.S. EPA (via telephone)	Rick Isaac – Brown and Caldwell
Vanessa Steigerwald – Ohio EPA (via telephone)	Bill Foster – Brown and Caldwell

The meeting was initiated by Rick Isaac. The following topics were discussed during the meeting:

HEALTH AND SAFETY

Personal Protective Equipment – High visibility shirt/vest, long pants, hard hat, safety glasses, steel toe boots are now required for all personnel and visitors to the site.

No issues, near misses, or accidents to report.

GENERAL DISCUSSION

The City of Elyria Water Department continues work on fixing the water line leak south of the Site.

Pat Steerman had a discussion with the Assistant City Engineer of the City of Elyria (City) regarding the seep at the north channel slope of the Ford Road Culvert Outlet Channel. The City understands that if the Phase 2 Remedial Action work is completed in this area of the Site before the City deals with the seep, then the City will be responsible for fixing/restoring the channel to the standards required by the Phase 2 Remedial Action including CQA oversight.

PROJECT WORK – JULY 18, 2012 THROUGH JULY 24, 2012 – The following work activities were performed during the past one week plus period:

- Continued loading, transporting, placing, grading, and compacting soil from the Camp Wahoo borrow area for the Upper Surface Area final cover system cap.
  - Haynes Construction placed a "windrow" stockpile of low permeability soil material along the western side of the Upper Surface Area final cover system cap running south to north for use in construction of the cap following removal of any trees along Ford Road and at a central location to the north of the office trailer. This work will be performed near the end of the field work to allow the trees to be present along Ford Road as long as possible.
- Continued loading, transporting, placing, and grading topsoil from the soil stockpile area behind the Metro Parks Service Maintenance Shop for the Upper Surface Area final cover system cap.
- Worked on placing soil material for the south end ramp.
- Initiated stripping topsoil at the Grobe Fruit Farm borrow area; 80 percent completed.

- Inspection and maintenance of the erosion and sediment controls – silt fence and straw bales.

PROJECTED WORK – JULY 25, 2012 THROUGH JULY 31, 2012 – The following work activities are anticipated to be performed during the next one week period:

- Begin loading, transporting, and stockpiling topsoil from the Camp Wahoo borrow area for the Upper Surface Area final cover system cap.
- Initiate loading, transporting, placing, grading, and compacting soil from the Grobe Fruit farm borrow area for the Steep Slope Soil Buttress.

SUBMITTALS – Brown and Caldwell received Submittal 10C – (Seed: Permanent mix) on July 17, 2012 and will review. Brown and Caldwell provided Haynes Construction with additional information for the permanent and temporary seed mixes; Haynes Construction will pass this information to the seed supplier and resubmit.

PROJECT SCHEDULE:

Haynes Construction indicated that the work is a little ahead of schedule. No work on Thursday and Friday, July 19, 2012 and July 20, 2012, due to rain. This delay is not anticipated to affect the overall project schedule.

COMPLAINTS RECEIVED

No complaints were received – U.S. EPA, Ohio EPA, Metro Parks Service, or at the Site.

The resident in the first house on Ford Road to the north of the Site asked Brian Holmes of the Metro Parks services to stop by; this resident was asked to watch for people on four-wheelers/motorcycles. Brian will report to the project team regarding his conversation with this resident.

Haynes Construction indicated that a car pulled out in front of one of the trucks to the south of the Metro Parks Service park entrance on Ford Road.

COMMENTS/QUESTIONS/ISSUES/CONCERNS

Major Part of Construction Completion.

- Demaree Collier asked when the major part of the construction would be completed. Haynes Construction indicated that, baring any unforeseen weather delays, the major construction items i.e. Steep Slope Soil Buttress and Upper Surface Area final cover system are on track to be completed in approximately one month.

RESOLUTIONS OF COMMENTS/QUESTIONS/ISSUES/CONCERNS

Waste Material Uncovered along the Crest of the Upper Surface Area.

- Resolved. This waste material was excavated to the elevation required to establish the subgrade of the Upper Surface Area and the waste material was placed along the

existing steep slopes of the Site to be covered by the Steep Slope Soil Buttress similar to the waste materials excavated from the installation of the Seep Drain. The excavation was covered with a minimum of two feet of the low permeability soil used to construct the Upper Surface Area final cover system cap.

Trees along Ford Road

- Resolved. Vanessa Steigerwald of the Ohio EPA sent an e-mail to Demaree Collier of the U.S. EPA indicating the Ohio EPA has no concerns with the plan to address the tress along Ford Road.

Metro Parks Service Invoice for the Soil.

- Resolved. Haynes Construction will have the former stockpile area behind the Maintenance Shop surveyed on July 24, 2012 for use in calculating the volume of soil. The Metro Parks Services will send an invoice to Brown and Caldwell for review and Brown and Caldwell will forward the invoice to Pat Steerman following review.

Metro Parks Service – Gravel in Yard.

- Resolved. Haynes Construction addressed this item.

PROGRESS PHOTOS

Soil buttress and south access ramp – Looking southwest.

PHASE 2 REMEDIAL ACTION
FORD ROAD LANDFILL

WEEKLY PROGRESS MEETING MINUTES
JULY 24, 2012

Steep Slope Soil Buttress: south end – Looking north

Black River riprap face – Looking east.

NEXT WEEKLY PROGRESS MEETING

The next Weekly Progress Meeting will be on Tuesday, July 31, 2012 at 1:00 pm at the Site trailer.

For those who need to attend remotely, please use the following call in information:

Telephone Nu NON-RESPONSIVE
Password: [redacted]

Brown AND Caldwell

PHASE 2 REMEDIAL ACTION
FORD ROAD LANDFILL

WEEKLY PROGRESS MEETING MINUTES
JULY 17, 2012

The Weekly Progress Meeting began at 1:00 pm on Tuesday, July 10, 2012. The following parties were present:

Pat Steerman – PRP Group (via telephone)
Joe Montello – PRP Group (via telephone)
Vanessa Steigerwald – Ohio EPA (via telephone)
Brian Holmes – Metro Parks Service
David Miller – Haynes Construction
Rick Isaac – Brown and Caldwell (via telephone)
Julie McGowan – Brown and Caldwell

The meeting was initiated by Rick Isaac. The following topics were discussed during the meeting:

HEALTH AND SAFETY

Personal Protective Equipment – High visibility shirt/vest, long pants, hard hat, safety glasses, steel toe boots are now required for all personnel and visitors to the site.

No issues, near misses, or accidents to report.

GENERAL DISCUSSION

The City of Elyria Water Department continues work on fixing the water line leak south of the Site.

Pat Steerman placed a call to the City Engineer of the City of Elyria to discuss the seep at the north channel slope of the Ford Road Culvert Outlet Channel. The Administrative Assistant recorded the information and will make sure the Assistant City Engineer will call Pat back. Pat will let the Project Team know the results of his discussion with the Assistant City Engineer.

PROJECT WORK – JULY 11, 2012 THROUGH JULY 17, 2012 – The following work activities were performed during the past one week plus period:

- Completed loading, transporting, placing, grading, and compacting soil from the soil stockpile behind the Metro Parks Service Maintenance Shop for the Steep Slope soil buttress.
- Continued loading, transporting, placing, grading, and compacting soil from the Camp Wahoo borrow area for the Upper Surface Area final cover system cap.
- Initiated loading, transporting, placing, and grading topsoil from the soil stockpile area behind the Metro Parks Service Maintenance Shop for the Upper Surface Area final cover system cap.
- Worked on rough finished grading of the Steep Slope Soil Buttress to the grades indicated by the field survey stakes from the river up to the elevation below the Drivable Drainage Channel.
- Finished grading the Sedimentation Basin berm.

- Inspection and maintenance of the erosion and sediment controls – silt fence and straw bales.

PROJECTED WORK – JULY 18, 2012 THROUGH JULY 24, 2012 – The following work activities are anticipated to be performed during the next one week period:

- Complete loading, transporting, placing, grading, and compacting soil from the Camp Wahoo borrow area for the Upper Surface Area final cover system cap.
  - Haynes Construction will place a "windrow" stockpile of low permeability soil material along the western side of the Upper Surface Area final cover system cap running south to north for use in construction of the cap following removal of any trees along Ford Road. This work will be performed near the end of the field work to allow the trees to be present along Ford Road as long as possible.
- Initiate loading, transporting, placing, grading, and compacting soil from the Grobe Fruit farm borrow area for the Steep Slope Soil Buttress.

SUBMITTALS – Brown and Caldwell received Submittal 10C – (Seed: Permanent mix) on July 17, 2012 and will review.

PROJECT SCHEDULE:

Haynes Construction indicated that the work is a little ahead of schedule. No work shutdown due to weather occurred in the last week.

COMPLAINTS RECEIVED

No complaints were received – U.S. EPA, Ohio EPA, or at the Site.

Brown and Caldwell received an e-mail from John Schneider, the Assistant City Engineer for the City of Elyria (the City) on Tuesday, July 10, 2012 that provided complaints from Daniel P. Jaykel the Assistant Safety Service Director for the City. The e-mail stated that Safety Service was receiving complaints as follows:

- Speeding trucks
  - The City has alerted the Elyria Police Department about the speeding trucks.
- Ford Road caving in near 1802 Ford Road
- Dusty, dirty conditions due to the added truck traffic

Brown and Caldwell told Haynes Construction about the speeding trucks and Haynes Construction will continue to reinforce the speeding issue with the truck drivers during the daily meetings. Brown and Caldwell has directed Haynes Construction to water and sweep Ford Road, continuously, if required to keep dust and mud off of Ford Road. Haynes Construction indicated that the Ford Road watering/cleaning will become a full-time operation.

PHASE 2 REMEDIAL ACTION
FORD ROAD LANDFILL

WEEKLY PROGRESS MEETING MINUTES
JULY 17, 2012

The 1802 Ford Road address is south of the Metro Parks Service entrance to the park across from the area where the water line break has occurred; therefore, this is not considered an issue related to the Ford Road project.

COMMENTS/QUESTIONS/ISSUES/CONCERNS

Waste Material Uncovered along the Crest of the Upper Surface Area.

- In the process of removing topsoil and establishing the subgrade of the Upper Surface Area, a small area, approximately 40 feet by 15 feet, in dimension, of waste material (plastic, wood, etc.) was uncovered. A discussion with Bill Frederick of the U.S. COE, onsite at the time this area was uncovered, took place to determine the best manner to address the waste material. This waste material was excavated to the elevation required to establish the subgrade of the Upper Surface Area and the waste material was placed along the existing steep slopes of the Site to be covered by the Steep Slope Soil Buttress similar to the waste materials excavated from the installation of the Seep Drain. The excavation will be covered with a minimum of two feet of the low permeability soil used to construct the Upper Surface Area final cover system cap.

Metro Parks Service Invoice for the Soil.

- The Metro Parks Services asked who to prepare an invoice for the soil material used from the stockpile behind the Maintenance Shop. The Metro Parks Services will send an invoice to Brown and Caldwell for review and Brown and Caldwell will forward the invoice to Pat Steerman following review.

Metro Parks Service – Gravel in Yard.

- The Metro Parks Services asked if some of the gravel used to repair/fix the road to the soil stockpile could be extended into the area past the gate. Haynes Construction will address this item.

RESOLUTIONS OF COMMENTS/QUESTIONS/ISSUES/CONCERNS

Water from the Seep Drain Outlet Pipes.

- Resolved. No water has been observed flowing from the Seep Drain outlet pipes. "Flap-type" gate valves will be installed on the end of the outlet pipes to allow water from the seep drain to exit while preventing water from the Sedimentation Basin to backflow into the pipes.

  Brown and Caldwell will monitor the outlet pipes throughout the performance of the Phase 2 Remedial Action work and inform the Project Team Members of any flow.

PHASE 2 REMEDIAL ACTION
FORD ROAD LANDFILL

WEEKLY PROGRESS MEETING MINUTES
JULY 17, 2012

Trees along Ford Road

- Resolved. Project Team Members reviewed the figure depicting the trees that will most likely need to be removed as the Upper Surface Area final cover system cap is constructed along Ford Road. The Ohio EPA concurred with the line as shown on the figure and Vanessa Steigerwald will send an e-mail to Demaree Collier of the U.S. EPA stating the approval. As previously stated, Haynes Construction will place a "windrow" stockpile of low permeability soil material along the western side of the Upper Surface Area final cover system cap running south to north for use in construction of the cap following removal of any trees along Ford Road. This work will be performed near the end of the field work to allow the trees to be present along Ford Road as long as possible.

  Brian Holmes of the Metro Parks Service asked if there are any plans to plant low-rooting trees i.e. white pines along Ford Road to replace the removed trees. The approved Remedial Action Work Plan (RAWP) does not include planting of trees and trees are not permitted to be planted on final cover system caps.

Presence of Pieces of Concrete w/Reinforcing Bars in Onsite Topsoil.

- Resolved. The extent and size of the concrete pieces was not found to be present throughout the Upper Surface Area. Haynes Construction has incorporated the concrete pieces into the fill.

City of Elyria Health Department –Weekly Progress Meeting Minutes

- Resolved. The City of Elyria Health Department has been added to the e-mail list for receipt of the Weekly Progress Meeting minutes.

  - **NEXT WEEKLY PROGRESS MEETING**
  - The next Weekly Progress Meeting will be on Tuesday, July 24, 2012 at 1:00 pm at the Site trailer.
  - For those who need to attend remotely, please use the following call in information:
  - Telephone Number: NON-RESPONSIVE
  - Password: [redacted]

PHASE 2 REMEDIAL ACTION
FORD ROAD LANDFILL

WEEKLY PROGRESS MEETING MINUTES
JULY 17, 2012

PROGRESS PHOTOS

Finished grade of the Sedimentation Basin berm – Looking south.

Seep Drain outlet pipes.

Rough finished grade of Steep Slope Soil Buttress – Looking north.

Upper Surface Area final cover system cap and topsoil stockpile – Looking north.

PHASE 2 REMEDIAL ACTION
FORD ROAD LANDFILL

WEEKLY PROGRESS MEETING MINUTES
JULY 10, 2012

The Weekly Progress Meeting began at 1:00 pm on Tuesday, July 10, 2012. The following parties were present:

Pat Steerman – PRP Group (via telephone)
Joe Montello – PRP Group (via telephone)
Demaree Collier – U.S. EPA (Via telephone)
Bill Frederick – U.S. ACE
Clarrisa Gereby – Ohio EPA
Rick Isaac – Brown and Caldwell
Bill Foster – Brown and Caldwell
Jim Peeples – Brown and Caldwell
Mark Haynes – Haynes Construction
David Miller – Haynes Construction

The meeting was initiated by Rick Isaac. The following topics were discussed during the meeting:

HEALTH AND SAFETY

Personal Protective Equipment – High visibility shirt/vest, long pants, hard hat, safety glasses, steel toe boots are now required for all personnel and visitors to the site.

No issues, near misses, or accidents to report.

GENERAL DISCUSSION

The City of Elyria Water Department continues work on fixing the leak; this will aid in minimizing the water present at the Sedimentation Basin principal spillway outlet.

Bill Foster of Brown and Caldwell has called the wastewater plant and Engineering Department contacts and left messages regarding the sewer line seep at the north end of the Site. No one from either department has made contact or has been at the Site in the past week. The critical time frame for executing any repairs will be from now until Haynes Construction is ready to install the Flexterra/Green Armor System in the channel. In the interim, Haynes Construction will proceed with applying temporary seed along the channel.

PROJECT WORK – JULY 4, 2012 THROUGH JULY 10, 2012 – The following work activities were performed during the past one week plus period:

- Continued loading, transporting, placing, grading, and compacting soil from the soil stockpile behind the Metro Parks Service Maintenance Shop for the Steep Slope soil buttress. Anticipated to be completed with this borrow area on Wednesday, July 11, 2012.
- Continued loading, transporting, placing, grading, and compacting soil from the Camp Wahoo borrow area for the Steep Slope Soil Buttress.
- Initiated work to remove onsite topsoil and required grading of the Upper Surface Area.
  - The investigation-derived waste (IDW) material and drums were incorporated in an area of the Upper Surface Area that will be covered by a minimum of two feet of low permeability soil cover.

PHASE 2 REMEDIAL ACTION
FORD ROAD LANDFILL

WEEKLY PROGRESS MEETING MINUTES
JULY 10, 2012

- Initiated loading, transporting, placing, grading, and compacting soil from the Camp Wahoo borrow area for the low permeability soil cap on the Upper Surface Area.
  - This was initiated to provide a place to stockpile topsoil from the Metro Parks Service Maintenance Shop borrow area and for removed onsite topsoil.
- Continued placement of the riprap face at the top of the Black River riprap as the soil fill was advanced.
- Inspection and maintenance of the erosion and sediment controls – silt fence and straw bales.

PROJECTED WORK – JULY 11, 2012 THROUGH JULY 17, 2012 – The following work activities are anticipated to be performed during the next one week period:

- Complete loading, transporting, placing, grading, and compacting soil from the soil stockpile behind the Metro Parks Service Maintenance Shop for the Steep Slope Soil Buttress.
- Continue loading, transporting, placing, grading, and compacting soil from the Camp Wahoo borrow area for the Steep Slope Soil Buttress and Upper Surface Area cap.
- Initiate loading, transporting, placing, grading, and compacting soil from the Grobe Fruit farm borrow area for the Steep Slope Soil Buttress.
  - Geotechnical test results of the soil samples from the proposed Grobe Fruit Farm borrow area passed the project requirements for the Steep Slope soil buttress material.
- Complete placement of the riprap at the Black River to extend the riprap face to elevation 612.0 msl.

SUBMITTALS – No submittals were submitted or reviewed during the period from July 4, 2012 through July 10, 2012.

PROJECT SCHEDULE:

Haynes Construction indicated that the work is a little ahead of schedule.

Rain shut down the work on Tuesday, July 3 2012 and Thursday, July 5, 2012. Haynes Construction worked on Saturday, July 7, 2012 to make up for the rain days.

COMPLAINTS RECEIVED

No complaints were received – U.S. EPA, Ohio EPA, or at the Site.

COMMENTS/QUESTIONS/ISSUES/CONCERNS

Water from the Seep Drain Outlet Pipes.

- No water has been observed flowing from the Seep Drain outlet pipes. Brown and Caldwell will monitor the outlet pipes throughout the performance of the Phase 2 Remedial Action work and inform the Project Team Members of any flow.

PHASE 2 REMEDIAL ACTION
FORD ROAD LANDFILL

WEEKLY PROGRESS MEETING MINUTES
JULY 10, 2012

Trees along Ford Road

- A figure depicting the trees that will most likely need to be removed has been provided to the Project Team Members for review. This issue will be discussed at the next Weekly Progress Meeting.

Presence of Pieces of Concrete w/Reinforcing Bars in Onsite Topsoil.

- Haynes Construction expressed a concern with the discovery of large pieces of broken concrete, with many containing reinforcing bars, in the onsite topsoil and soil required to be removed to create the Upper Surface Area subgrade. This concrete has been found randomly around the Site from a couple inches to a foot below the existing ground surface. A tire on one of the self-loading scrapers was destroyed by the reinforcing bars.

City of Elyria Health Department –Weekly Progress Meeting Minutes

Clarrisa Gereby of the Ohio EPA indicated that City of Elyria Health Department would like to be added to the e-mail list for receipt of the Weekly Progress Meeting minutes.

RESOLUTIONS OF COMMENTS/QUESTIONS/ISSUES/CONCERNS

North Wastewater Seep – Concern with "Tearing up" any Work Performed.

- This concern has been noted and will be conveyed to the City of Elyria (the City). Based on the timing of the City's repairs, the City needs to be made aware that any damage to the work performed associated with the Ford Road Culvert Outlet Channel that is compromised as a result of the City's repair work will be the responsibility of the City to repair/restore to the satisfaction of the PRP Group. Bill Foster of Brown and Caldwell will continue to establish contact the City.

NEXT WEEKLY PROGRESS MEETING

The next Weekly Progress Meeting will be on Tuesday, July 17, 2012 at 1:00 pm at the Site trailer.

For those who need to attend remotely, please use the following call in information:

Telephone Number: NON-RESPONSIVE
Password: [redacted]

PHASE 2 REMEDIAL ACTION
FORD ROAD LANDFILL

WEEKLY PROGRESS MEETING MINUTES
JULY 10, 2012

PROGRESS PHOTOS

Steep Slope Soil Buttress lift being placed.

Stripping topsoil from the Upper Surface Area – Looking south.

Low permeability soil placed for the Upper Surface Area cap – Looking north.

Area where IDW soil and drums were placed – Looking north.

PHASE 2 REMEDIAL ACTION
FORD ROAD LANDFILL

WEEKLY PROGRESS MEETING MINUTES
JULY 3, 2012

The Weekly Progress Meeting began at 1:00 pm on Tuesday, July 3, 2012. The following parties were present:

Vanessa Steigerwald – Ohio EPA (via telephone)	Rick Isaac – Brown and Caldwell
Pat Steerman – PRP Group (via telephone)	Bill Foster – Brown and Caldwell
Joe Montello – PRP Group	Jim Peeples – Brown and Caldwell
David Miller – Haynes Construction	Tim Perkins – Metro Parks Service

The meeting was initiated by Rick Isaac. The following topics were discussed during the meeting:

HEALTH AND SAFETY

Personal Protective Equipment – High visibility shirt/vest, long pants, hard hat, safety glasses, steel toe boots are now required for all personnel and visitors to the site.

A person riding a dirt bike came onsite via the North Access Road, turned around part way down the hill, and left the Site. Bill Foster of Brown and Caldwell followed this individual, but was not able to make contact. Brian Holmes of the Metro Parks Service indicated that they would keep an eye out for this individual on Parks Service properties.

No issues, near misses, or accidents to report.

GENERAL DISCUSSION

A water main leak was discovered by Bill Foster of Brown and Caldwell to the south of the Site and east of Ford Road. The City of Elyria Water Department is working on fixing the leak; this will aid in minimizing the water present at the Sedimentation Basin principal spillway outlet.

A seep in the north slope of the Ford Road Culvert Outlet Channel was noticed due to moist/wet soil material in the channel bottom. The City of Elyria Wastewater Department was notified and is currently determining if this is a wastewater or engineering issue. The last contact indicated that the Engineering Department wants to sample the seep to determine if the seep is wastewater.

PROJECT WORK – JUNE 27, 2012 THROUGH JULY 3, 2012 – The following work activities were performed during the past one week plus period:

- Completed loading, transporting, placing, grading, and compacting soil from the soil stockpile behind the Metro Parks Service Maintenance Shop for the Sedimentation Basin berm.
- Continued loading, transporting, placing, grading, and compacting soil from the borrow area for the Steep Slope Soil Buttress; this source of soil is almost all removed.

  - A second offsite borrow source known as the Grobe Fruit Farm is being evaluated as an additional source for soil material.
- The South Access Road extension has been completed for use in hauling soil material. This will provide Haynes Construction with the ability to drive through the Site in a continuous loop without having the trucks turn around or back out.
- Placement of the riprap face at the top of the Black River riprap was initiated.
- Inspection and maintenance of the erosion and sediment controls – silt fence and straw bales.

PROJECTED WORK – JULY 4, 2012 THROUGH JULY 10, 2012 – The following work activities are anticipated to be performed during the next one week period:

- Continue loading, transporting, placing, grading, and compacting soil from the soil stockpile behind the Metro Parks Service Maintenance Shop for the Steep Slope Soil Buttress.
  - Once this material is exhausted, resume loading, transporting, placing, grading, and compacting soil from the Camp Wahoo borrow area and the potential Grobe Fruit Farm following approval.
- Continue placement of the riprap at the Black River to extend the riprap face to elevation 612.0 msl.
- Progress the Steep Slope Soil Buttress to the Drivable Drainage Channel elevation.
- The surveyor will be onsite on Monday, July 9, 2012 to set reference stakes for the Steep Slope Area.

SUBMITTALS – Submittal status during the past one week plus period:

- Submittal No. 3B (Netpave® 50 Interlocking Grids) – No Exceptions Taken.
- Submittal No. 5A – (Access road aggregate materials; LaFarge: 411 aggregate) - No Exceptions Taken.
- Submittal No. 5C - (Pea stone materials)
  - Sedimentation Basin Rock Check Dams: LaFarge – No Exceptions Taken.
- Submittal No. 6B - (Construction entrance aggregates; LaFarge) – No Exceptions Taken.
- Submittal 8B – (HP-FGM Materials) – No Exceptions Taken.
- Submittal 8B – (Green Armor) – No Exceptions Taken.
- Submittal 10C – (Seed: Steep slope mix) – No Exceptions Taken.
- Submittal 11A – (Seep Drain aggregate materials: LaFarge) – No Exceptions Taken.
- Submittal 12B – (TRM Materials) – Amend and Resubmit on June 28, 2012; No Exceptions Taken on July 2, 2012.

PHASE 2 REMEDIAL ACTION
FORD ROAD LANDFILL

WEEKLY PROGRESS MEETING MINUTES
JULY 3, 2012

PROJECT SCHEDULE:

The Site will be closed on Wednesday, July 4, 2012 for the holiday; Haynes construction will make a decision by midday/late afternoon on Thursday, July 5, 2012 if work will be performed on Saturday, July 7, 2012. Rain on Tuesday morning, July 3, 2012 shutdown work.

Haynes Construction indicated that the work is on schedule with the bulk of the earthwork scheduled for completion by the end of August 2012.

COMPLAINTS RECEIVED

No complaints were received – U.S. EPA, Ohio EPA, or at the Site.

The Metro Parks Services indicated they received a dust complaint regarding one day no water truck was on Ford Road for half of the day. Brown and Caldwell will make sure that the dust issues are adequately addressed by Haynes Construction.

COMMENTS/QUESTIONS/ISSUES/CONCERNS

North Wastewater Seep.

- A concern was expressed that the seep at the north slope of the Ford Road Culvert Outlet Channel may/will "tear up" any work that is performed. Based on the timing of the City of Elyria's (the City) repairs, the City needs to be made aware that any damage to the work performed associated with the Ford Road Culvert Outlet Channel that is compromised as a results of the City's repair work will be the responsibility of the City to repair/restore to the satisfaction of the PRP Group. Bill Foster of Brown and Caldwell will contact the City.

RESOLUTIONS OF COMMENTS/QUESTIONS/ISSUES/CONCERNS

Water from the Seep Drain Outlet Pipes.

- No water has been observed flowing from the Seep Drain outlet pipes. Brown and Caldwell will monitor the outlet pipes throughout the performance of the Phase 2 Remedial Action work and inform the Project Team Members of any flow.

Trees along Ford Road

- A draft figure has been created and will be discussed in the field following the Weekly Progress Meeting. Following these discussions. A figure will be provided to the Project Team Members.

PHASE 2 REMEDIAL ACTION
FORD ROAD LANDFILL

WEEKLY PROGRESS MEETING MINUTES
JULY 3, 2012

Affects of Trucks Running through Metro Parks Service Maintenance Shop Area.

- Resolved. Haynes Construction indicated that the ruts through the Maintenance Shop Area will be restored and the dirt will be cleaned up following completion of the soil and topsoil material hauling to the Site (one to two days estimated for hauling to complete).

Water Present in the Area of the Sedimentation Basin Outlet Structure

- Resolved. Bill Foster of Brown and Caldwell identified the water main leak and the City of Elyria is addressing the leak. Following completion of the work to fix the leak, the water present in the area of the Sedimentation Basin outlet structure is anticipated to be minimized.

NEXT WEEKLY PROGRESS MEETING

The next Weekly Progress Meeting will be on Tuesday, July 10, 2012 at 1:00 pm at the Site trailer.

For those who need to attend remotely, please use the following call in information:

Telephone Number: NON-RESPONSIVE
Password: [redacted]

PROGRESS PHOTOS

Riprap material for the Black River riprap face.

Placing the riprap face along the Black River.

Completed Sedimentation Basin berm – Looking north.

Steep Slope Soil Buttress – Looking north.

Steep Slope Soil Buttress – Looking south.

PHASE 2 REMEDIAL ACTION
FORD ROAD LANDFILL

WEEKLY PROGRESS MEETING MINUTES
JUNE 26, 2012

The Weekly Progress Meeting began at 1:00 pm on Tuesday, June 26, 2012. The following parties were present:

Demaree Collier – U.S. EPA (via telephone)
Vanessa Steigerwald – Ohio EPA (via telephone)
Bill Frederick – U.S. ACE (via telephone)
Mark Haynes – Haynes Construction
David Miller – Haynes Construction
Pat Steerman – PRP Group (via telephone)
Joe Montello – PRP Group (via telephone)
Rick Isaac – Brown and Caldwell Via telephone)
Bill Foster – Brown and Caldwell
Jim Peeples – Brown and Caldwell (via telephone)

The meeting was initiated by Rick Isaac. The following topics were discussed during the meeting:

HEALTH AND SAFETY

- Personal Protective Equipment – High visibility shirt/vest, long pants, hard hat, safety glasses, steel toe boots are now required for all personnel and visitors to the site.
- No issues, near misses, or accidents to report.

GENERAL DISCUSSION

- Rick Isaac asked the Project Team members if the Weekly Progress Meeting Minutes e-mails were being received and if anyone was having issues with the Progress Photographs since these files can make the e-mail large. No issues were identified.
- The Sedimentation Basin berm has been constructed to enclose the basin area to an elevation approximately 1.5 feet below the design elevation. The remaining 1.5 feet will be added as part of the South Access Road aggregate material that runs across the top of the Sedimentation Basin berm.

PROJECT WORK – JUNE 20, 2012 THROUGH JUNE 26, 2012 – The following work activities were performed during the past one week plus period:

- Removed the existing soil from the Sedimentation Basin berm area down to suitable subbase and spread the soil material against the slope of the Landfill.
- Loading, transporting, placing, grading, and compacting soil from the soil stockpile behind the Metro Parks Service Maintenance Shop for the Sedimentation Basin berm.
- Loading, transporting, placing, grading, and compacting soil from the borrow area for the Steep Slope Soil Buttress – 129 loads of material on Monday, June 25, 2012.
- The geotextile and stone for the Ford Road Culvert Outlet Channel has been installed.
- Inspection and maintenance of the erosion and sediment controls – silt fence and straw bales.

PHASE 2 REMEDIAL ACTION
FORD ROAD LANDFILL

WEEKLY PROGRESS MEETING MINUTES
JUNE 26, 2012

PROJECTED WORK – JUNE 27, 2012 THROUGH JULY 3, 2012 – The following work activities are anticipated to be performed during the next one week period:

- Loading, transporting, placing, grading, and compacting soil from the borrow area for the Steep Slope Soil Buttress on the opposite side of the Sedimentation Basin berm and the access road at the southern end of the Sedimentation Basin.
- Loading, transporting, placing, grading, and compacting soil from the soil stockpile behind the Metro Parks Service Maintenance Shop for the Steep Slope Soil Buttress.
- Initiate placement of the riprap at the Black River to extend the riprap face to elevation 612.0 msl.

SUBMITTALS – Submittal status during the past one week plus period:

- Submittal No. 1B (Contractor's HASP) – Reviewed.
- Submittal No. 1C (Contractor's HAZWOPER training and medical monitoring certifications) – Reviewed.
- Submittal No. 2 (Non-woven geotextile)
  - Tencate Mirafi® 180N – No Exceptions Taken.
  - Tencate Mirafi® 140N – Rejected – See Remarks.
  - Skaps GT – 140 – No Exceptions Taken.
  - Manufacturer's QC Certifications - Skaps GT – 140 – No Exceptions Taken.
  - Manufacturer's QC Certifications - Tencate Mirafi® 180N – No Exceptions Taken.
- Submittal No. 5A – (Access road aggregate materials; Hanson: 411 aggregate) - No Exceptions Taken.
- Submittal No. 5B - (Riprap materials)
  - Ford Road Culvert Outlet Channel: Type D only – No Exceptions Taken.
  - Sedimentation Basin Riprap Outlet Apron: Type C only – No Exceptions Taken.
  - Sedimentation Basin Rock Check Dams: Type D only – No Exceptions Taken.
  - Downchute Channel Outlet: Type B only – No Exceptions Taken.
  - Black River Riprap Face: Type A only – No Exceptions Taken.
- Submittal No. 5C - (Pea stone materials)
  - Sedimentation Basin Rock Check Dams: Hansen – No Exceptions Taken.
- Submittal No. 6B - (Construction entrance aggregates; Hansen) – No Exceptions Taken

PROJECT SCHEDULE:

- Haynes Construction is currently on schedule or a little ahead of schedule.

COMPLAINTS RECEIVED

- No complaints were received – U.S. EPA, Ohio EPA, U.S. ACE, or at the Site.

PHASE 2 REMEDIAL ACTION
FORD ROAD LANDFILL

WEEKLY PROGRESS MEETING MINUTES
JUNE 26, 2012

COMMENTS/QUESTIONS/ISSUES/CONCERNS

Water from the Seep Drain Outlet Pipes.

- A question was asked about the presence of water from the Seep Drain outlet pipes. The Seep Drain was completed on the morning of June 26, 2012 and, as of the time of the Weekly Progress Meeting; no water has been observed coming from the outlet pipes.

Water Present in the Area of the Sedimentation Basin Outlet Structure

- Standing water has been present in the area where the principal spillway outlet of the Sedimentation Basin will be constructed. This issue will be investigated to determine if any design adjustments/revisions may be required.

RESOLUTIONS OF COMMENTS/QUESTIONS/ISSUES/CONCERNS

Soil Material behind the Metro Parks Service Maintenance Shop.

- Resolved; Based on visual observation of the soil material removed from the stockpile, there appears to be approximately double the amount of soil (an additional 10,000 to 12,000 cubic yards) initially thought to be available. Haynes will use all of the material from this borrow source with the actual volume calculated based on field surveys.

Trees along Ford Road

- Discussions are ongoing to determine the best and most appropriate manner to deal with the trees along Ford Road. The figure showing the tree line and depths of soil cover and decisions made regarding this issue will be forwarded to the Project Team in the future.

Affects of Trucks Running through Metro Parks Service Maintenance Shop Area.

- As with the entrances to the Site from Ford Road, any affects and potential damage to the Maintenance Shop area and Ford Road caused by the trucks transporting the soil material from the stockpile will be mitigated as much as possible.

NEXT WEEKLY PROGRESS MEETING

The next Weekly Progress Meeting will be on Tuesday, July 3, 2012 at 1:00 pm at the Site trailer.

For those who need to attend remotely, please use the following call in information:

Telephone Number: NON-RESPONSIVE
Password: [redacted]

PHASE 2 REMEDIAL ACTION
FORD ROAD LANDFILL

WEEKLY PROGRESS MEETING MINUTES
JUNE 26, 2012

PROGRESS PHOTOS

River plain material removed and placed on steep slope – looking northeast.

Metro Parks Service - Maintenance Shop soil stockpile.

Constructing the Sedimentation Basin berm – Looking south.

Sedimentation Basin – Looking south.

Ford Road Culvert Outlet Channel riprap material – Looking west.

PHASE 2 REMEDIAL ACTION
FORD ROAD LANDFILL

WEEKLY PROGRESS MEETING MINUTES
JUNE 19, 2012

The Weekly Progress Meeting began at 1:00 pm on Tuesday, June 19, 2012. The following parties were present:

Demaree Collier – U.S. EPA (via telephone)
Clarissa Gereby – Ohio EPA
Bill Frederick – U.S. ACE
Mark Haynes – Haynes Construction
David Miller – Haynes Construction
Pat Steerman – PRP Group (via telephone)
Brian Holmes – Metro Parks Service
Rick Isaac – Brown and Caldwell
Bill Foster – Brown and Caldwell
Jim Peeples – Brown and Caldwell (via telephone)

The meeting was initiated by Rick Isaac. The following topics were discussed during the meeting:

HEALTH AND SAFETY

- Personal Protective Equipment – High visibility shirt/vest, long pants, hard hat, safety glasses, steel toe boots are now required for all personnel and visitors to the site.
- Overhead wire signs and orange fence around wires were erected/placed.
- No issues, near misses, or accidents to report.

GENERAL DISCUSSION

- None

PROJECT WORK – JUNE 13, 2012 THROUGH JUNE 19, 2012 – The following work activities were performed during the past one week plus period:

- Clearing contractor - work completed and mobilized off the Site
- Loading, transporting, placing, grading, and compacting soil from the borrow area for the North Access Road and access to the bottom (river floodplain) of the Site – 1,200 loads of material to date.
- Seep Drain along the toe of the steep slope has been installed.
- Inspection and maintenance of the erosion and sediment controls – silt fence and straw bales.

PROJECTED WORK – JUNE 20, 2012 THROUGH JUNE 26, 2012 – The following work activities are anticipated to be performed during the next one week period:

- Initiate work to remove the existing Sedimentation Basin berm and place material against the steep slopes.
- Haul soil from the Metro Parks Service Maintenance Shop borrow area for construction of the Sedimentation Basin berm.
- Deliver riprap material for the Ford Road Culvert Outlet Channel.

- Shape ditch and install rock check dams

SUBMITTALS – Submittal status during the past one week plus period:

- Submittal No. 11A (Seep Drain aggregate materials) – No exception taken.
- Submittal No. 11B (Seep Drain HDPE pipe) – Brown and Caldwell requested up-to-date information which Haynes Construction provided: No exception taken.

PROJECT SCHEDULE:

- Haynes Construction is currently on schedule or a little ahead of schedule; rain from the weekend had little to no affect on the schedule.

COMPLAINTS RECEIVED

- No complaints were received – U.S. EPA, Ohio EPA, Metro Parks Service, or at the Site.

COMMENTS/QUESTIONS/ISSUES/CONCERNS

Soil Material behind the Metro Parks Service Maintenance Shop.

- Brian Holmes of the Metro Parks Service indicated that the vegetation had been removed from the soil stockpile and indicated that his supervisor asked about the volume of material to be removed. Plans call for 10,000 to 11,000 cubic yards.

Trees along Ford Road

- Brian Holmes of the Metro Parks Service asked about trees along Ford Road. The Metro Parks Service would like to see the trees kept as much as possible; dust block and aesthetic value. Asked if take out some trees could white pines be replanted.

  U.S. EPA is waiting on the figure showing where the existing two-foot cover is along Ford Road in relation to the location of the trees. Jim Peeples of Brown and Caldwell will send the figure. Some trees will need to be removed and for the trees that remain, the soil needs to be kept at the drip edge of the trees.

  A comment was made that stopping the soil cover short of Ford Road would be a Permit Modification requiring approval of the U.S. EPA.

Affects of Trucks Running through Metro Parks Service Maintenance Shop Area.

- Brian Holmes of the Metro Parks Service indicated that the Metro Parks Service is concerned about the affect and potential damage to the Maintenance Shop area and Ford Road caused by the trucks transporting the soil material from the stockpile.

RESOLUTIONS OF COMMENTS/QUESTIONS/ISSUES/CONCERNS

- Not applicable this week.

PHASE 2 REMEDIAL ACTION
FORD ROAD LANDFILL

WEEKLY PROGRESS MEETING MINUTES
JUNE 19, 2012

PROGRESS PHOTOS

Stump grinding – North slope looking south.

Grading steep slope soil along river plain – Looking south.

Compacting steep slope soil along river plain – Looking north.

Pipe in Seep Drain trench – Looking north.

Seep Drain - air trap.

Seep Drain – gravel backfill.

PHASE 2 REMEDIAL ACTION
FORD ROAD LANDFILL

WEEKLY PROGRESS MEETING MINUTES
JUNE 19, 2012

NEXT WEEKLY PROGRESS MEETING

The next Weekly Progress Meeting will be on Tuesday, June 26, 2012 at 1:00 pm at the Site trailer.

For those who need to attend remotely, please use the following call in information:

Telephone Number: NON-RESPONSIVE
Password: [redacted]

PHASE 2 REMEDIAL ACTION
FORD ROAD LANDFILL

WEEKLY PROGRESS MEETING MINUTES
JUNE 12, 2012

The Weekly Progress Meeting began at 1:00 pm on Tuesday, June 12, 2012. The following parties were present:

Clarissa Gereby – Ohio EPA
Vanessa Steigerwald – Ohio EPA (via telephone)
Mark Haynes – Haynes Construction
David Miller – Haynes Construction
Rick Isaac – Brown and Caldwell
Julie McGowan – Brown and Caldwell
Jim Peeples – Brown and Caldwell (via telephone)

The meeting was initiated by Rick Isaac. The following topics were discussed during the meeting:

GENERAL DISCUSSION

- Introductions

HEALTH AND SAFETY

- Personal Protective Equipment – High visibility shirt/vest, long pants, hard hat, safety glasses, steel toe boots are now required for all personnel and visitors to the site.
- No issues, near misses, or accidents to report.

PROJECT WORK – JUNE 5, 2012 THROUGH JUNE 12, 2012 – The following work activities were performed during the past one week plus period:

- Clearing contractor:
  - Tree clearing completed.
  - Working on finishing chipping of smaller tree pieces, limbs, etc.
  - Finish stump grinding by the end of the week Friday, June 15, 2012.
- Inspection and maintenance of the erosion and sediment controls – silt fence and straw bales.
- Loading, transporting, placing, grading, and compacting soil from the borrow area for the North Access Road and access to the bottom (river floodplain) of the site.

PROJECTED WORK – JUNE 13, 2012 THROUGH JUNE 19, 2012 – The following work activities are anticipated to be performed during the next one week period:

- Initiate work on the seep drain and complete installation.
- Continue to work on the South Access Road ramp.
- Continue work on the North Access Road and Ford Road Culvert Outlet Channel.

SUBMITTALS – Submittal status during the past one week plus period:

- Sedimentation Basin Outlet Structure – Reviewed by Brown and Caldwell.

PHASE 2 REMEDIAL ACTION
FORD ROAD LANDFILL

WEEKLY PROGRESS MEETING MINUTES
JUNE 12, 2012

PROJECT SCHEDULE:

- Haynes Construction is currently on schedule or a little ahead of schedule; weather has been good (no rain).

COMPLAINTS RECEIVED

- No complaints were received during the period between the Pre-Construction Meeting and today's meeting – Ohio EPA or at the project site.

COMMENTS/QUESTIONS/ISSUES/CONCERNS

Additional People to the E-Mail List.

- Rick Isaac of Brown and Caldwell asked for project team members to provide any additional names and e-mail addresses of people that the project team members would like to add to the list.

Information and Drawings at the Pre-Construction Meeting.

- Vanessa Steigerwald of the Ohio EPA thanked Brown and Caldwell for providing the Phase 2 Remedial Action project information and drawings to the project team members during the Pre-Construction Meeting.

RESOLUTIONS OF COMMENTS/QUESTIONS/ISSUES/CONCERNS

- Not applicable this week.

PROGRESS PHOTOS

Clearing subcontractor chipper.

PHASE 2 REMEDIAL ACTION
FORD ROAD LANDFILL

WEEKLY PROGRESS MEETING MINUTES
JUNE 12, 2012

Clearing subcontractor track-mounted saw attachment.

Steep slope cleared looking north to south.

Brown AND Caldwell

PHASE 2 REMEDIAL ACTION
FORD ROAD LANDFILL

WEEKLY PROGRESS MEETING MINUTES
JUNE 12, 2012

Initiating work on North Access Road.

Compacted soil lift of the North Access Road.

Brown AND Caldwell

PHASE 2 REMEDIAL ACTION
FORD ROAD LANDFILL

WEEKLY PROGRESS MEETING MINUTES
JUNE 12, 2012

NEXT WEEKLY PROGRESS MEETING

The next Weekly Progress Meeting will be on Tuesday, June 19, 2012 at 1:00 pm at the site trailer.

For those who need to attend remotely, please use the following call in information:

Telephone Number: NON-RESPONSIVE
Password: [redacted]

Brown AND Caldwell

Appendix B: Construction Photographs

THIS PAGE INTENTIONALLY LEFT BLANK.

Phase I and Phase II Remedial Action
Ford Road Landfill
Completion of Construction Certification Report
Photograph Log

Date	Photo ID	Direction	Description
			Phase I Remedial Action
9/9/2011	1.jpg	West	Construction Entrance
8/31/2011	2.jpg		Timbco 425 EXL w/Quadco saw attachment
8/31/2011	3.jpg	South	Clearing at North Soil Removal Area
8/31/2011	4.jpg	North	Clearing at North Soil Removal Area
8/31/2011	5.jpg	South	Vegetation removal
8/31/2011	6.jpg	South	Vegetation removal
8/31/2011	7.jpg	North	Vegetation removal
8/31/2011	8.jpg		Collecting trees to haul to Staging Area
8/31/2011	9.jpg	North	Vegetation removal
8/31/2011	10.jpg	East	Clearing South Access Road
9/6/2011	11.jpg	South	Clearing Sedimentation Basin area
9/8/2011	12.jpg	East	South Access Road and Sedimentation Basin berm
9/9/2011	13.jpg		Placing geotextile fabric and aggregate for South Access Road
9/9/2011	14.jpg		South Access Road - completed upper section
9/12/2011	15.jpg		Placing geotextile fabric and aggregate for South Access Road
9/9/2011	16.jpg		Installing silt fence
9/9/2011	17.jpg		Installing silt fence
9/12/2011	18.jpg		Silt fence and straw bales - sediment control
9/12/2011	19.jpg		Silt fence and straw bales - sediment control
9/12/2011	20.jpg		Working to establish the toe of the South Access Road
9/13/2011	21.jpg		Working to establish the Sedimentation Basin berm
9/13/2011	22.jpg		Construction of the Onsite Soil Placement Area
9/14/2011	23.jpg	South	Removing overburden from the North Soil Removal Area
9/15/2011	24.jpg	North	Upper Surface Soil Placement Area
9/15/2011	25.jpg		Onsite Temporary Treatment Facility
9/16/2011	26.jpg	North	Lower Area Dewatering Pad
9/19/2011	27.jpg		Slurry Wall Construction
9/20/2011	28.jpg	South	Lower Area Dewatering Pad
9/20/2011	29.jpg	Southeast	Upper Surface Soil Placement Area
9/20/2011	30.jpg	East	Upper Surface Soil Placement Area
9/20/2011	31.jpg		Slurry Mixing Plant
9/20/2011	32.jpg		Field Testing the slurry mix
9/20/2011	33.jpg		Field Testing the slurry mix
9/20/2011	34.jpg	Southeast	Lower Area Dewatering Pad
9/20/2011	35.jpg	East	Slurry Wall Construction
10/6/2011	36.jpg	West	Temporary South Access Rd
10/7/2011	37.jpg	East	Temporary South Access Rd
10/8/2011	38.jpg	South	Temporary Construction Access Rd
10/11/2011	39.jpg	North	Temporary Construction Access Rd
10/11/2011	40.jpg	North	Placing Super Sack sandbags
10/17/2011	41.jpg	North	Super Sack sandbags in place

Phase I and Phase II Remedial Action
Ford Road Landfill
Completion of Construction Certification Report
Photograph Log

Date	Photo ID	Direction	Description
10/29/2011	42.jpg	East	North Soil Removal Area Excavation
10/30/2011	43.jpg	East	North Soil Removal Area Excavation
10/30/2011	44.jpg	East	North Soil Removal Area Excavation
10/31/2011	45.jpg	East	North Soil Removal Area Excavation
11/2/2011	46.jpg	North	Backfilling North Soil Removal Area
11/3/2011	47.jpg		Testing soil for moisture and density
11/4/2011	48.jpg	North	Backfilling North Soil Removal Area
11/7/2011	49.jpg	South	Backfilling North Soil Removal Area
11/8/2011	50.jpg	South	Placing Riprap
11/10/2011	51.jpg	Southeast	South Soil Removal Area Excavation
11/10/2011	52.jpg	Southeast	South Soil Removal Area Excavation
11/10/2011	53.jpg	South	Backfilling South Soil Removal Area
11/19/2011	54.jpg	Northeast	Lower Soil Placement Area
11/21/2011	55.jpg	Northwest	Lower Soil Placement Area
12/1/2011	56.jpg	Northeast	Lower Soil Placement Area with tarps in place
12/1/2011	57.jpg	Northwest	Lower Soil Placement Area with tarps in place
12/8/2011	58.jpg	Northeast	Upper Surface Soil Placement Area with tarps in place
12/12/2011	59.jpg	South	Planting Willow Stakes
12/16/2011	60.jpg	North	Hydroseed placement
12/16/2011	61.jpg	North	Hydroseed
12/16/2011	62.jpg	South	Seed and Straw placed at North Soil Removal Area
			Phase II Remedial Action
6/4/2012	63.jpg	East	Site Clearing/Weekly Progress Meeting Sitewalk
6/6/2012	64.jpg	North	Site Clearing
6/8/2012	65.jpg	East	North Access Road Construction
6/11/2012	66.jpg	South	Steep Slope Soil Buttress Construction
6/18/2012	67.jpg		Seep Drain Construction
6/19/2012	68.jpg	South	Phase I Sedimentation Basin Berm Removal
6/20/2012	69.jpg	West	Sedimentation Basin Berm Construction
6/25/2012	70.jpg	East	Sedimentation Basin Construction
6/27/2012	71.jpg	West	Ford Rd Culvert Outlet Channel Construction
6/28/2012	72.jpg	North	Steep Slope Soil Buttress Construction
6/28/2012	73.jpg	West	Sedimentation Basin Construction
6/29/2012	74.jpg	North	Riprap Extension
6/29/2012	75.jpg		Testing soil for moisture and density
7/3/2012	76.jpg	North	Steep Slope Soil Buttress Construction
7/6/2012	77.jpg	North	Final Cover Cap System Construction
7/23/2012	78.jpg	West	Riprap Extension
7/27/2012	79.jpg	West	Sedimentation Basin Principle Spillway Outlet Channel Construction
8/1/2012	80.jpg	West	Steep Slope Soil Buttress Construction
8/20/2012	81.jpg	South	Steep Slope Soil Buttress Construction

Phase I and Phase II Remedial Action
Ford Road Landfill
Completion of Construction Certification Report
Photograph Log

Date	Photo ID	Direction	Description
8/28/2012	82.jpg	West	Relocating Encountered Waste
8/29/2012	83.jpg		Sedimentation Basin Principle Spillway Concrete Base Construction
9/7/2012	84.jpg	North	Steep Slope Soil Buttress Construction
9/13/2012	85.jpg	South	Additional Trees Cleared along Ford Rd
9/21/2012	86.jpg	South	Final Cover Cap System Construction
9/21/2012	87.jpg	South	Steep Slope Soil Buttress Construction
10/1/2012	88.jpg	East	Topsoil Placement
10/5/2012	89.jpg	East	Topsoil Placement
10/15/2012	90.jpg	South	Final Cover Cap System
10/15/2012	91.jpg	South	South Access Road Construction
10/16/2012	92.jpg	North	Driveable Drainage Channel Construction
10/16/2012	93.jpg	West	North Access Road Construction
10/17/2012	94.jpg	West	Surface Water Diversion Channel Construction
10/17/2012	95.jpg	South	Driveable Drainage Channel Construction
10/19/2012	96.jpg	East	Ford Rd Culvert Outlet Channel Construction
10/20/2012	97.jpg		Downchute Channel Outlet
10/22/2012	98.jpg	East	Hydroseed Placement

THIS PAGE INTENTIONALLY LEFT BLANK.