3051H Mounting Brackets for 2-in. Pipe and Panel Mount (Option Code B5/B6)

PIPE MOUNTING CONFIGURATION

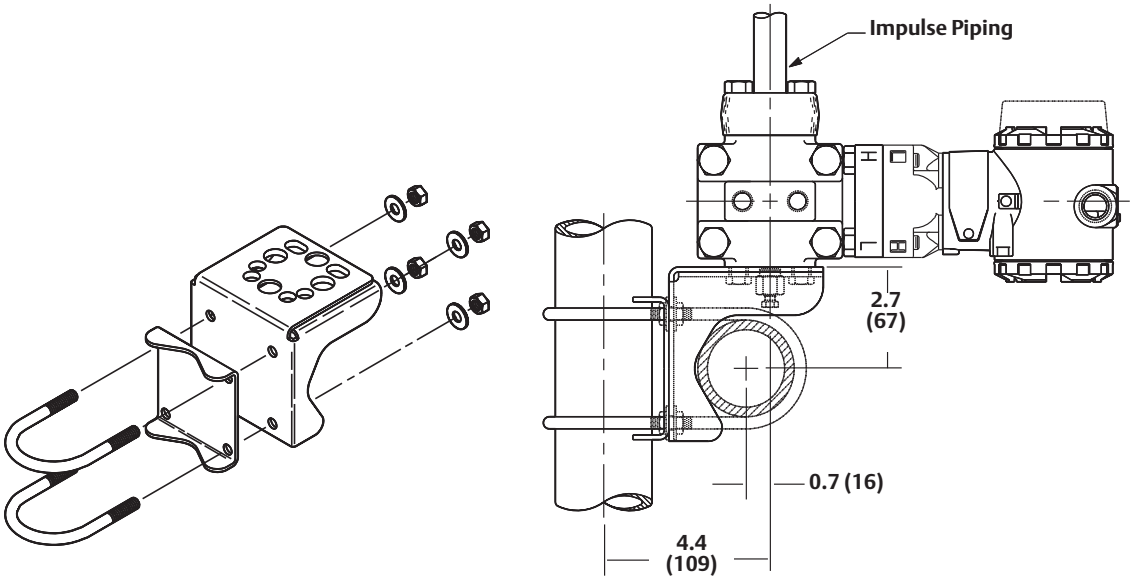

PANEL MOUNTING CONFIGURATION
7/16–20 x 3/4 Bolts Supplied for Attaching Bracket to Transmitter

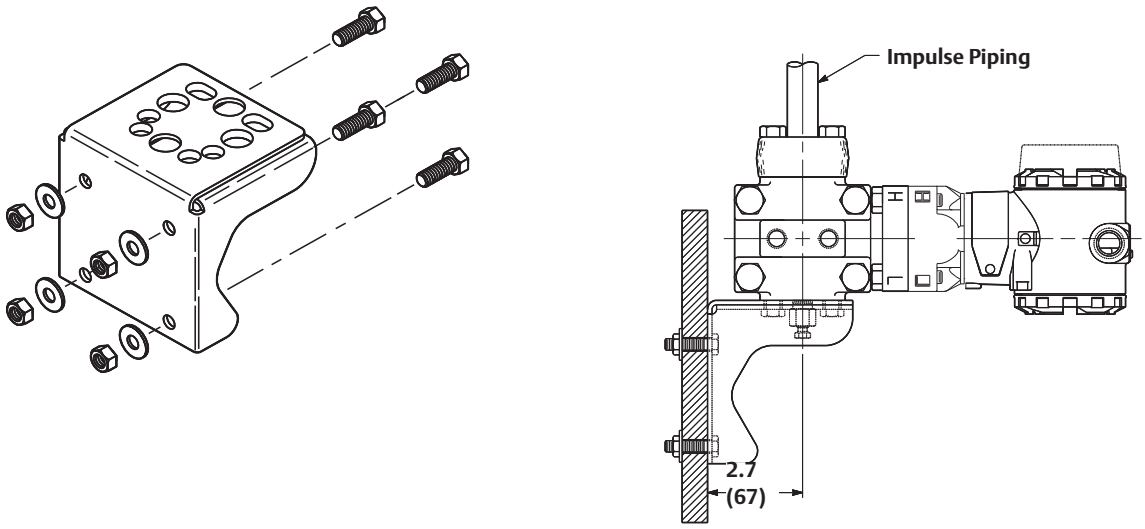

Dimensions are in inches (millimeters)

A.5 Ordering Information

Model	Transmitter Type			
3051C	Coplanar Pressure Transmitter			
Measurement Type				
Standard				**Standard**
D	Differential			★
G	Gage			★
Expanded				
A	Absolute			
Pressure Ranges (Range/Min. Span)				
	3051CD	3051CG[1]	3051CA	
Standard				**Standard**
1	–25 to 25 inH_2O/0.5 inH_2O (–62,2 to 62,2 mbar/1,2 mbar)	–25 to 25 inH_2O/0.5 inH_2O (–62,1 to 62,2 mbar/1,2 mbar)	0 to 30 psia/0.3 psia (0 to 2,1 bar/20,7 mbar)	★
2	–250 to 250 inH2O/2.5 inH_2O (–623 to 623 mbar/6,2 mbar)	–250 to 250 inH_2O/2.5 inH_2O (–621 to 623 mbar/6,2 mbar)	0 to 150 psia/1.5 psia (0 to 10,3 bar/0,1 bar)	★
3	–1000 to 1000 inH_2O/10 inH_2O (–2,5 to 2,5 bar/25 mbar)	–393 to 1000 inH_2O/10in H_2O (–0,98 to 2,5 bar/25 mbar)	0 to 800 psia/8 psia (0 to 55,2 bar/0,55 bar)	★
4	–300 to 300 psi/3 psi (–20,7 to 20,7 bar/0,2 bar)	–14.2 to 300 psi/3 psi (–0,98 to 20,7 bar/0,2 bar)	0 to 4000 psia/40 psia (0 to 275,8 bar/2,8 bar)	★
5	–2000 to 2000 psi/20 psi (–137,9 to 137,9 bar/1,4 bar)	–14.2 to 2000 psig/20 psi (–0,98 to 137,9 bar/1,4 bar)	Not Applicable	★
Expanded				
0[2]	–3 to 3 inH_2O/0.1 inH_2O (–7,5 to 7,5 mbar/0,25 mbar)	Not Applicable	Not Applicable	
Output				
Standard				**Standard**
A	4–20 mA with Digital Signal Based on HART Protocol			★
F	FOUNDATION fieldbus Protocol			★
W[3]	Profibus PA Protocol			★
Expanded				
M[4]	Low-Power, 1–5 Vdc with Digital Signal Based on HART Protocol *(See Option C2 for 0.8–3.2 V dc)*			

Materials of Construction				
	Process Flange Type	Flange Material	Drain/Vent	
Standard				**Standard**
2	Coplanar	SST	SST	★
3[5]	Coplanar	Cast C-276	Alloy C-276	★
4	Coplanar	Cast Alloy 400	Alloy 400/K-500	★
5	Coplanar	Plated CS	SST	★
7[5]	Coplanar	SST	Alloy C-276	★
8[5]	Coplanar	Plated CS	Alloy C-276	★
0	Alternate Flange—See Options on page 156			★
Isolating Diaphragm				
Standard				**Standard**
2[5]	316L SST			★
3[5]	Alloy C-276			★
Expanded				
4	Alloy 400			
5	Tantalum (Available on 3051CD and CG, Ranges 2–5 only. Not available on 3051CA)			
6	Gold-plated Alloy 400 (Use in combination with O-ring Option Code B.)			
7	Gold-plated SST			
O-ring				
Standard				**Standard**
A	Glass-filled PTFE			★
B	Graphite-filled PTFE			★
Sensor Fill Fluid				
Standard				**Standard**
1	Silicone			★
2	Inert fill (Differential and Gage only)			★
	Housing Material		**Conduit Entry Size**	
Standard				**Standard**
A	Polyurethane-covered Aluminum		½–14 NPT	★
B	Polyurethane-covered Aluminum		M20 × 1.5 (CM20)	★
J	SST		½–14 NPT	★
K	SST		M20 × 1.5 (CM20)	★

Expanded			
D	Polyurethane-covered Aluminum	G½	
M	SST	G½	

A.5.1 Options (Include with selected model number)

Plantweb Control Functionality		
Standard		**Standard**
A01	FOUNDATION fieldbus Advanced Control Function Block Suite	★
Plantweb Diagnostic Functionality		
Standard		**Standard**
D01	FOUNDATION fieldbus Diagnostics Suite	★
Alternate Flange		
Standard		**Standard**
H2	Traditional Flange, 316 SST, SST Drain/Vent	★
H3[(5)]	Traditional Flange, Alloy C, Alloy C-276 Drain/Vent	★
H4	Traditional Flange, Monel, Monel Drain/Vent	★
H7[(5)]	Traditional Flange, 316 SST, Alloy C-276 Drain/Vent	★
HJ	DIN Compliant Traditional Flange, SST, 1/16 in. Adapter/Manifold Bolting	★
FA	Level Flange, SST, 2 in., ANSI Class 150, Vertical Mount	★
FB	Level Flange, SST, 2 in., ANSI Class 300, Vertical Mount	★
FC	Level Flange, SST, 3 in., ANSI Class 150, Vertical Mount	★
FD	Level Flange, SST, 3 in., ANSI Class 300, Vertical Mount	★
FP	DIN Level Flange, SST, DN 50, PN 40, Vertical Mount	★
FQ	DIN Level Flange, SST, DN 80, PN 40, Vertical Mount	★
Expanded		
HK	DIN Compliant Traditional Flange, SST, 10 mm Adapter/Manifold Bolting	
HL	DIN Compliant Traditional Flange, SST, 12mm Adapter/Manifold Bolting (Not available on 3051CD0)	
Integral Assembly		
Standard		**Standard**
S3[(6)]	Assemble to Rosemount 405 Compact Orifice Plate	★
S5[(6)]	Assemble to Rosemount 305 Integral Manifold (specified separately, see the Rosemount 305 and 306 Integral Manifolds PDS (document number 00813-0100-4733))	★
S6[(6)]	Assemble to Rosemount 304 Manifold or Connection System	★

Integral Mount Primary Element		
Standard		**Standard**
S4[(6)]	Assemble to Rosemount Annubar or Rosemount 1195 Integral Orifice *(With the primary element installed, the maximum operating pressure will equal the lesser of either the transmitter or the primary element. Option is available for factory assembly to range 1–4 transmitters only)*	★
Seal Assemblies		
Standard		**Standard**
S1[(6)]	Assemble to one Rosemount 1199 seal	★
S2[(6)]	Assemble to two Rosemount 1199 seals	★
All-Welded Seal Assemblies (for high vacuum applications)		
Standard		**Standard**
S0[(6)]	One Seal, All-Welded System (Direct Mount Connection Type)	★
S7[(6)]	One Seal, All-Welded System (Capillary Connection Type)	★
S8[(6)]	Two Seals, All-Welded System (Capillary Connection Type)	★
S9[(6)]	Two Seals, All-Welded System (One Direct Mount and One Capillary Connection Type)	★
Mounting Bracket		
Standard		**Standard**
B1	Traditional Flange Bracket for 2-in. Pipe Mounting, CS Bolts	★
B2	Traditional Flange Bracket for Panel Mounting, CS Bolts	★
B3	Traditional Flange Flat Bracket for 2-in. Pipe Mounting, CS Bolts	★
B4	Coplanar Flange Bracket for 2-in. Pipe or Panel Mounting, all SST	★
B7	B1 Bracket with Series 300 SST Bolts	★
B8	B2 Bracket with Series 300 SST Bolts	★
B9	B3 Bracket with Series 300 SST Bolts	★
BA	SST B1 Bracket with Series 300 SST Bolts	★
BC	SST B3 Bracket with Series 300 SST Bolts	★
Product Certifications		
Standard		**Standard**
C6	CSA Explosion-proof, Dust Ignition-proof, Intrinsically Safe, and Division 2	★
E2	INMETRO Flameproof	★

E3	China Flameproof	★
E4[12]	TIIS Flame-proof	★
E5	FM Explosion-proof, Dust Ignition-Proof	★
E7[7]	IECEx Flameproof, Dust Ignition-proof	★
E8	ATEX Flameproof and Dust	★
I1[7]	ATEX Intrinsic Safety and Dust	★
I2	INMETRO Intrinsic Safety	★
I3	China Intrinsic Safety	★
I4	TIIS Intrinsic Safety	★
I5	FM Intrinsically Safe, Division 2	★
I7[7]	IECEx Intrinsic Safety	★
IA	ATEX FISCO Intrinsic Safety; for FOUNDATION fieldbus protocol only	★
IE	FM FISCO Intrinsically Safe; for FOUNDATION fieldbus protocol only	★
K2	INMETRO Flameproof, Instrinsic Safety	★
K5	FM Explosion-proof, Dust Ignition-Proof, Intrinsically Safe, and Division 2	★
K6[7]	CSA and ATEX Explosion-proof, Intrinsically Safe, and Division 2 (combination of C6 and K8)	★
K7[7]	IECEx Flame-proof, Dust Ignition-proof, Intrinsic Safety, and Type n (combination of I7, N7, and E7)	★
K8[12]	ATEX Flameproof, Intrinsic Safety, Type n, Dust (combination of E8, I1, and N1)	★
KB	FM and CSA Explosion-proof, Dust Ignition Proof, Intrinsically Safe, and Division 2 (combination of K5 and C6)	★
KD[12]	FM, CSA, and ATEX Explosion-proof, Intrinsically Safe (combination of K5, C6, I1, and E8)	★
N1[12]	ATEX Type n and Dust	★
N3	China Type n	★
N7[7]	IECEx Type n	★
Custody Transfer		
Standard		**Standard**
C5[9]	Measurement Canada Accuracy Approval *(Limited availability depending on transmitter type and range. Contact an Emerson Process Management representative)*	★
Bolting Material		
Standard		**Standard**
L4	Austenitic 316 SST Bolts	★
L5	ASTM A 193, Grade B7M Bolts	★
L6	Alloy K-500 Bolts	★
Display Type		
Standard		**Standard**
M4[8]	LCD Display with Local Operator Interface	★
M5	LCD display for Aluminum Housing (Housing Codes A, B, C, and D only)	★
M6	LCD display for SST Housing (Housing Codes J, K, L, and M only)	★

Calibration Certificate		
Standard		**Standard**
Q4	Calibration Certificate	★
QG	Calibration Certificate and GOST Verification Certificate	★
QP	Calibration certification and tamper evident seal	★
Material Traceability Certification		
Standard		**Standard**
Q8	Material Traceability Certification per EN 10204 3.1 *(Only available for the sensor module housing and Coplanar or traditional flanges and adapters (3051C), and for the sensor module housing and low-volume Coplanar flange and adapter (3051C with Option Code S1))*	★
Quality Certification for Safety		
Standard		**Standard**
QS	Certificate of FMEDA Data	★
Zero/Span Adjustment		
Standard		**Standard**
J1[(9)(10)]	Local Zero Adjustment Only	★
J3[(9)(10)]	No Local Zero or Span Adjustment	★
Transient Protection Terminal Block		
Standard		**Standard**
T1	Transient Protection Terminal Block	★
Software Configuration		
Standard		**Standard**
C1[(9)]	Custom Software Configuration (Completed CDS 00806-0100-4001 required with order)	★
Low Power Output		
Expanded		
C2[(9)]	0.8–3.2 Vdc Output with Digital Signal Based on HART Protocol (Output Code M only)	
Gage Pressure Calibration		
Standard		**Standard**
C3	Gage Calibration (Model 3051CA4 only)	★
Alarm Limit		
Standard		**Standard**
C4[(9)(11)]	Analog Output Levels Compliant with NAMUR Recommendation NE 43, Alarm High	★
CN[(9)(11)]	Analog Output Levels Compliant with NAMUR Recommendation NE 43, Alarm Low	★

Pressure Testing		
Expanded		
P1	Hydrostatic Testing with Certificate	
Cleaning Process Area		
Expanded		
P2	Cleaning for Special Service	
P3	Cleaning for <1 PPM Chlorine/Fluorine	
Pressure Calibration		
Expanded		
P4	Calibrate at Line Pressure *(Specify Q48 on order for corresponding certificate)*	
High Accuracy		
Standard		**Standard**
P8	0.04% accuracy to 5:1 turndown (Range 2-4)	★
Flange Adapters		
Standard		**Standard**
DF	1/2 -14 NPT flange adapter(s)	★
D3	¼–18 NPT Process Connections (No flange adapters), Hastelloy	★
D3	¼–18 NPT Process Connections (No flange adapters), *Monel*	★
Vent/Drain Valves		
Expanded		
D7	Coplanar Flange Without Drain/Vent Ports	
Conduit Plug		
Standard		**Standard**
DO	316 SST Conduit Plug	★
RC1/4 RC1/2 Process Connection		
Expanded		
D9	JIS Process Connection—RC ¼ Flange with RC ½ Flange Adapter, CS	
D9	JIS Process Connection—RC ¼ Flange with RC ½ Flange Adapter, 316SST	
Max Static Line Pressure		
Standard		**Standard**
P9	4500 psig Static Pressure Limit (3051CD Ranges 2–5 only)	★

Ground Screw		
Standard		**Standard**
V5[12]	External Ground Screw Assembly	★
Drinking Water Approval		
Standard		**Standard**
DW	NSF drinking water approval	★
Surface Finish		
Standard		**Standard**
Q16	Surface finish certification for sanitary remote seals	★
Toolkit Total System Performance Reports		
Standard		**Standard**
QZ	Remote Seal System Performance Calculation Report	★
Conduit Electrical Connector		
Standard		**Standard**
GE	M12, 4-pin, Male Connector (eurofast®)	★
GM	A size Mini, 4-pin, Male Connector (minifast®)	★
Typical Model Number: 3051CD 2 A 2 2 A 1 A B4$13857 780		

(1) 3051CG lower range limit varies with atmospheric pressure.
(2) 3051CD0 is available only with Output Code A, Process Flange Code 0 (Alternate Flange H2, H7, HJ, or HK), Isolating Diaphragm Code 2, O-ring Code A, and Bolting Option L4.
(3) Option code M4 - LCD Display with Local Operator Interface required for local addressing and configuration.
(4) Not available with hazardous locations certification Options Codes I1, N1, E4, K6 and K8.
(5) Materials of Construction comply with recommendations per NACE MR0175/ISO 15156 for sour oil field production environments. Environmental limits apply to certain materials. Consult latest standard for details. Selected materials also conform to NACE MR0103 for sour refining environments.
(6) "Assemble-to" items are specified separately and require a completed model number.
(7) Not available with Low Power code M.
(8) Available only with output code W - Profibus PA.
(9) Not available with Fieldbus (output code F) or Profibus (output code W).
(10) Local zero and span adjustments are standard unless Option Code J1 or J3 is specified.
(11) NAMUR-Compliant operation is pre-set at the factory and cannot be changed to standard operation in the field.
(12) The V5 option is not needed with the T1 option; external ground screw assembly is included with the T1 option.

Model	Transmitter Type	
3051T	Pressure Transmitter	
Pressure Type		
Standard		**Standard**
G	Gage	★
A	Absolute	★

Pressure Upper Range Limit - Configurable Description			
	3051TG[1]	**3051TA**	
Standard			**Standard**
1	30 psi (2,1 bar)	30 psia (2,1 bar)	★
2	150 psi (10,3 bar)	150 psia (10,3 bar)	★
3	800 psi (55,2 bar)	800 psia (55,2 bar)	★
4	4000 psi (275,8 bar)	4000 psia (275,8 bar)	★
5	10000 psi (689,5 bar)	10000 psia (689,5 bar)	★
Transmitter Output			
Standard			**Standard**
A	4–20 mA with Digital Signal Based on HART Protocol		★
F	FOUNDATION fieldbus Protocol		★
W[2]	Profibus PA Protocol		★
Expanded			
M	Low-Power 1–5 Vdc with Digital Signal Based on HART Protocol		
Process Connection Style			
Standard			**Standard**
2B	1/2–14 NPT Female		★
2C	G½ A DIN 16288 Male (Available in SST for Range 1–4 only)		★
Expanded			
2F	Coned and Threaded, Compatible with Autoclave Type F-250-C *(Includes Gland and Collar, Available in SST for Range 5 only)*		
61	Non-threaded Instrument flange (Range 1-4 only)		
Isolating Diaphragm		**Process Connection Wetted Parts Material**	
Standard			**Standard**
2[3]	316L SST	316L SST	★
3[3]	Alloy C-276	Alloy C-276	★
Sensor Fill Fluid			
Standard			**Standard**
1	Silicone		★
2	Inert (Fluorinert® FC-43)		★

Housing Material		Conduit Entry Size	
Standard			**Standard**
A	Polyurethane-covered Aluminum	½–14 NPT	★
B	Polyurethane-covered Aluminum	M20 × 1.5 (CM20)	★
J	SST	½–14 NPT	★
K	SST	M20 × 1.5 (CM20)	★
Expanded			
D	Polyurethane-covered Aluminum	G½	
M	SST	G½	

A.5.2 Options (Include with selected model number)

PlantWeb Control Functionality		
Standard		**Standard**
A01	Advanced Control Function Block Suite	★
PlantWeb Diagnostic Functionality		
Standard		**Standard**
D01	FOUNDATION fieldbus Diagnostics Suite	★
Integral Assembly		
Standard		**Standard**
S5[(4)]	Assemble to Rosemount 306 Integral Manifold	★
Seal Assemblies		
Standard		**Standard**
S1[(4)]	Assemble to one Rosemount 1199 seal	★
Mounting Bracket		
Standard		**Standard**
B4	Bracket for 2-in. Pipe or Panel Mounting, All SST	★
Product Certifications		
Standard		**Standard**
C6	CSA Explosion-proof, Dust Ignition-proof, Intrinsically Safe, and Division 2	★
E2	INMETRO Flameproof	★
E3	China Flameproof	★
E4[(5)]	TIIS Flameproof	★

E5	FM Explosion-proof, Dust Ignition-proof	★
E7[(5)]	IECEx Flameproof, Dust Ignition-proof	★
E8	ATEX Flameproof and Dust	★
I1[(5)]	ATEX Intrinsic Safety and Dust	★
I2	INMETRO Intrinsic Safety	★
I3	China Intrinsic Safety	★
I5	FM Intrinsically Safe, Division 2	★
I7[(5)]	IECEx Intrinsic Safety	★
IA	ATEX Intrinsic Safety for FISCO; for *FOUNDATION* fieldbus protocol only	★
IE	FM FISCO Intrinsically Safe; for FOUNDATION fieldbus protocol only	★
K2	INMETRO Flameproof, Intrinsic Safety	★
K5	FM Explosion-proof, Dust Ignition-proof, Intrinsically Safe, and Division 2	★
K6[(5)]	CSA and ATEX Explosion-proof, Intrinsically Safe, and Division 2 (combination of C6 and K8)	★
K7[(5)]	IECEx Flameproof, Dust Ignition-proof, Intrinsic Safety, and Type n (combination of I7, N7, and E7)	★
K8[(5)]	ATEX Flame-proof, Intrinsic Safety, Type n, Dust (combination of E8, I1, and N1)	★
KB	FM and CSA Explosion-proof, Dust Ignition-proof, Intrinsically Safe, and Division 2 (combination of K5 and C6)	★
KD[(5)]	FM, CSA, and ATEX Explosion-proof, Intrinsically Safe (combination of K5, C6, I1, and E8)	★
N1[(5)]	ATEX Type n Certification and Dust	★
N3	China Type n	★
N7[(5)]	IECEx Type n Certification	★
Custody Transfer		
Standard		**Standard**
C5	Measurement Canada Accuracy Approval *(Limited availability depending on transmitter type and range. Contact an Emerson Process Management representative)*	★
Calibration Certification		
Standard		**Standard**
Q4	Calibration Certificate	★
QG	Calibration Certificate and GOST Verification Certificate	★
QP	Calibration Certification and tamper evident seal	★
Material Traceability Certification		
Standard		**Standard**
Q8	Material Traceability Certification per EN 10204 3.1 *NOTE: This option applies to the process connection only.*	★
Quality Certification for Safety		
Standard		**Standard**
QS	Certificate of FMEDA Data	★
QT	Safety certified to IEC 61508 with Certificate of FMEDA data	★

Zero/Span Adjustment		
Standard		**Standard**
J1[(6)(7)]	Local Zero Adjustment Only	★
J3[(6)(7)]	No Local Zero or Span Adjustment	★
Expanded		
D1	Hardware adjustments (zero, span, alarm, security)	
Display Type		
Standard		**Standard**
M4[(8)]	LCD Display with Local Operator Interface	★
M5	LCD display	★
M6	LCD display for SST Housing (Housing Codes J, K, L and M only)	★
Conduit Plug		
Standard		**Standard**
DO	316 SST Conduit Plug	★
Transient Terminal Block		
Standard		**Standard**
T1	Transient Protection Terminal Block	★
Software Configuration		
Standard		**Standard**
C1[(6)]	Custom Software Configuration (Completed CDS 00806-0100-4001 required with order)	★
Expanded		
C2[(6)]	0.8–3.2 Vdc Output with Digital Signal Based on *HART* Protocol (Output Code M only)	
Alarm Limit		
Standard		**Standard**
C4[(7)(9)]	Analog Output Levels Compliant with NAMUR Recommendation NE 43, Alarm High	★
CN[(7)(9)]	Analog Output Levels Compliant with NAMUR Recommendation NE 43, Low Alarm	★
CR	Custom alarm and saturation signal levels, high alarm	★
CS	Custom alarm and saturation signal levels, low alarm	★
CT	Low alarm (standard Rosemount alarm and saturation levels)	★
Pressure Testing		
Expanded		
P1	Hydrostatic Testing with Certificate	

Cleaning Process Area		
Expanded		
P2	Cleaning for Special Service	
P3	Cleaning for <1 PPM Chlorine/Fluorine	
High Accuracy		
Standard		**Standard**
P8	0.04% accuracy to 5:1 turndown (Range 2-4)	★
Ground Screw		
Standard		**Standard**
V5[10]	External Ground Screw Assembly	★
Drinking Water Approval		
Standard		**Standard**
DW	NSF drinking water approval	★
Surface Finish		
Standard		**Standard**
Q16	Surface finish certification for sanitary remote seals	★
Toolkit Total System Performance Reports		
Standard		**Standard**
QZ	Remote Seal System Performance Calculation Report	★
Conduit Electrical Connector		
Standard		**Standard**
GE	M12, 4-pin, Male Connector (eurofast®)	★
GM	A size Mini, 4-pin, Male Connector (minifast®)	★
Typical Model Number: 3051T G 5 F 2A 2 1 A B4		

(1) 3051TG lower range limit varies with atmospheric pressure.
(2) Option code M4 - LCD Display with Local Operator Interface required for local addressing and configuration.
(3) Materials of Construction comply with recommendations per NACE MR0175/ISO 15156 for sour oil field production environments. Environmental limits apply to certain materials. Consult latest standard for details. Selected materials also conform to NACE MR0103 for sour refining environments.
(4) "Assemble-to" items are specified separately and require a completed model number.
(5) Not available with low-power Option Code M.
(6) Not available with fieldbus (output code F) or Profibus protocols (output code W).
(7) Local zero and span adjustments are standard unless Option Code J1 or J3 is specified.
(8) Available only with output code W - Profibus PA.
(9) NAMUR-Compliant operation is pre-set at the factory and cannot be changed to standard operation in the field.
(10) The V5 option is not needed with T1 option; external ground screw assembly is included with the T1 option.

Model	Transmitter Type			
3051L	Liquid Level Transmitter			
Pressure Range				
Standard				**Standard**
2	–250 to 250 inH_2O (–0,6 to 0,6 bar)			★
3	–1000 to 1000 inH_2O (–2,5 to 2,5 bar)			★
4	–300 to 300 psi (–20,7 to 20,7 bar)			★
Transmitter Output				
Standard				**Standard**
A	4–20 mA with Digital Signal Based on *HART* Protocol			★
F	FOUNDATION fieldbus Protocol			★
W(1)	Profibus PA Protocol			★
Expanded				
M(2)	Low-Power 1–5 Vdc with Digital Signal Based on *HART* Protocol (See Option Code C2 for 0.8–3.2 Vdc Output)			
Process Connection Size, Material, Extension length (High Side)				
Standard				**Standard**
Code	**Process Connection Size**	**Material**	**Extension Length**	★
G0(3)	2-in./DN 50	316L SST	Flush Mount Only	★
H0(3)	2-in./DN 50	Alloy C-276	Flush Mount Only	★
J0	2-in./DN 50	Tantalum	Flush Mount Only	★
A0(3)	3-in./DN 80	316L SST	Flush Mount	★
A2(3)	3-in./DN 80	316L SST	2-in./50 mm	★
A4(3)	3-in./DN 80	316L SST	4-in./100 mm	★
A6(3)	3-in./DN 80	316L SST	6-in./150 mm	★
B0(3)	4-in./DN 100	316L SST	Flush Mount	★
B2(3)	4-in./DN 100	316L SST	2-in./50 mm	★
B4(3)	4-in./DN 100	316L SST	4-in./100 mm	★
B6(3)	4-in./DN 100	316L SST	6-in./150 mm	★
C0(3)	3-in./DN 80	Alloy C-276	Flush Mount	★
C2(3)	3-in./DN 80	Alloy C-276	2-in./50 mm	★
C4(3)	3-in./DN 80	Alloy C-276	4-in./100 mm	★
C6(3)	3-in./DN 80	Alloy C-276	6-in./150 mm	★
D0(3)	4-in./DN 100	Alloy C-276	Flush Mount	★
D2(3)	4-in./DN 100	Alloy C-276	2-in./50 mm	★

D4[3]	4-in./DN 100	Alloy C-276	4-in./100 mm	★
D6[3]	4-in./DN 100	Alloy C-276	6-in./150 mm	★
E0	3-in./DN 80	Tantalum	Flush Mount Only	★
F0	4-in./DN 100	Tantalum	Flush Mount Only	★
Mounting Flange Size, Rating, Material (High Side)				
	Size	**Rating**	**Material**	
Standard				**Standard**
M	2-in.	ANSI/ASME B16.5 Class 150	CS	★
A	3-in.	ANSI/ASME B16.5 Class 150	CS	★
B	4-in.	ANSI/ASME B16.5 Class 150	CS	★
N	2-in.	ANSI/ASME B16.5 Class 300	CS	★
C	3-in.	ANSI/ASME B16.5 Class 300	CS	★
D	4-in.	ANSI/ASME B16.5 Class 300	CS	★
P	2-in.	ANSI/ASME B16.5 Class 600	CS	★
E	3-in.	ANSI/ASME B16.5 Class 600	CS	★
X[3]	2-in.	ANSI/ASME B16.5 Class 150	SST	★
F[3]	3-in.	ANSI/ASME B16.5 Class 150	SST	★
G[3]	4-in.	ANSI/ASME B16.5 Class 150	SST	★
Y[3]	2-in.	ANSI/ASME B16.5 Class 300	SST	★
H[3]	3-in.	ANSI/ASME B16.5 Class 300	SST	★
J[3]	4-in.	ANSI/ASME B16.5 Class 300	SST	★
Z[3]	2-in.	ANSI/ASME B16.5 Class 600	SST	★
L[3]	3-in.	ANSI/ASME B16.5 Class 600	SST	★
Q	DN 50	PN 10-40 per EN 1092-1	CS	★
R	DN 80	PN 40 per EN 1092-1	CS	★
S	DN 100	PN 40 per EN 1092-1	CS	★
V	DN 100	PN 10/16 per EN 1092-1	CS	★
K[3]	DN 50	PN 10-40 per EN 1092-1	SST	★
T[3]	DN 80	PN 40 per EN 1092-1	SST	★
U[3]	DN 100	PN 40 per EN 1092-1	SST	★
W[3]	DN 100	PN 10/16 per EN 1092-1	SST	★
7[3]	4 in.	ANSI/ASME B16.5 Class 600	SST	★
Expanded				
1	—	10K per JIS B2238	CS	
2	—	20K per JIS B2238	CS	
3	—	40K per JIS B2238	CS	
4[3]	—	10K per JIS B2238	316 SST	

5[3]	—	20K per JIS B2238	316 SST	
6[3]	—	40K per JIS B2238	316 SST	
Process Fill-High Pressure Side		**Specific Gravity**	**Temperature Limits (Ambient Temperature of 70 °F (21 °C))**	
Standard				**Standard**
A	Syltherm XLT	0.85	-102 to 293 °F (-75 to 145 °C)	★
C	Silicone 704	1.07	32 to 401 °F (0 to 205 °C)	★
D	Silicone 200	0.93	-49 to 401 °F (-45 to 205 °C)	★
H	Inert (Halocarbon)	1.85	-49 to 320 °F (-45 to 160 °C)	★
G	Glycerine and Water	1.13	5 to 203 °F (-15 to 95 °C)	★
N	Neobee M-20	0.92	5 to 401 °F (-15 to 205 °C)	★
P	Propylene Glycol and Water	1.02	5 to 203 F (-15 to 95 °C)	★
Low Pressure Side				
	Configuration	**Flange Adapter**	**Diaphragm Material**	**Sensor Fill Fluid**
Standard				**Standard**
11[3]	Gage	SST	316L SST	Silicone ★
21[3]	Differential	SST	316L SST	Silicone ★
22[3]	Differential	SST	Alloy C-276	Silicone ★
2A[3]	Differential	SST	316L SST	Inert (Halocarbon) ★
2B[3]	Differential	SST	Alloy C-276	Inert (Halocarbon) ★
31[3]	Tuned-System Assembly with Remote Seal	None	316L SST	Silicone *(Requires Option Code S1)* ★
O-ring				
Standard				**Standard**
A	Glass-filled PTFE			★
Housing Material		**Conduit Entry Size**		
Standard				**Standard**
A	Aluminum	½–14 NPT		★
B	Aluminum	M20 × 1.5		★
J	SST	½–14 NPT		★
K	SST	M20 × 1.5		★

Expanded			
D	Aluminum	G½	
M	SST	G½	

A.5.3 Options (Include with selected model number)

PlantWeb Control Functionality		
Standard		**Standard**
A01	FOUNDATION fieldbus Advanced Control Function Block Suite	★
PlantWeb Diagnostic Functionality		
Standard		**Standard**
D01	FOUNDATION fieldbus Diagnostics Suite	★
Seal Assemblies		
Standard		**Standard**
S1[(4)]	Assembled to One Rosemount 1199 Seal (Requires 1199M)	★
Product Certifications		
Standard		**Standard**
E5	FM Explosion-proof, Dust Ignition-proof	★
I5	FM Intrinsically Safe, Division 2	★
K5	FM Explosion-proof, Dust Ignition-proof, Intrinsically Safe, and Division 2	★
I1[(5)]	ATEX Intrinsic Safety and Dust	★
N1[(5)]	ATEX Type n Certification and Dust	★
E8	ATEX Flameproof and Dust	★
E4[(5)]	TIIS Flameproof	★
C6	CSA Explosion-proof, Dust Ignition-proof, Intrinsically Safe, and Division 2	★
K6[(5)]	CSA and ATEX Explosion-proof, Intrinsically Safe, and Division 2 (combination of C6 and K8)	★
KB	FM and CSA Explosion-proof, Dust Ignition-proof, Intrinsically Safe, and Division 2 (combination of K5 and C6)	★
K7[(5)]	IECEx Flameproof, Dust Ignition-proof, Intrinsic Safety, and Type n (combination of I7, N7, and E7)	★
K8[(5)]	ATEX Flame-proof and Intrinsic Safety Approvals (combination of I1 and E8)	★
KD[(5)]	FM, CSA, and ATEX Explosion-proof, Intrinsically Safe (combination of K5, C6, I1, and E8)	★

I7[5]	IECEx Intrinsic Safety	★
E7[5]	IECEx Flameproof, Dust Ignition-proof	★
N7[5]	IECEx Type n Certification	★
IA	ATEX FISCO Intrinsic Safety	★
IE	FM FISCO Intrinsically Safe	★
E2	INMETRO Flameproof	★
I2	INMETRO Intrinsic Safety	★
K2	INMETRO Flameproof, Intrinsic Safety	★
E3	China Flameproof	★
I3	China Intrinsic Safety	★
N3	China Type n	★
Bolting Material		
Standard		**Standard**
L4	Austenitic 316 SST Bolts	★
L5	ASTM A 193, Grade B7M bolts	★
L6	Alloy K-500 Bolts	★
L8	ASTM A 193 Class 2, Grade B8M Bolts	★
Display Type		
Standard		**Standard**
M4[6]	LCD Display with Local Operator Interface	★
M5	LCD Display for Aluminum Housing (Housing Codes A, B, C, and D only)	★
M6	LCD Display for SST Housing (Housing Codes J, K, L, and M only)	★
Calibration Certification		
Standard		**Standard**
Q4	Calibration Certificate	★
QP	Calibration Certificate and tamper evident seal	★
QG	Calibration Certificate and GOST Verification Certificate	★
Material Traceability Certification		
Standard		**Standard**
Q8	Material Traceability Certification per EN 10204 3.1	★
Quality Certification for Safety		
Standard		**Standard**
QS[7]	Prior-use certificate of FMEDA data	★

Toolkit Total System Performance Reports		
Standard		**Standard**
QZ	Remote Seal System Performance Calculation Report	★
Conduit Electrical Connector		
Standard		**Standard**
GE	M12, 4-pin, Male Connector (eurofast®)	★
GM	A size Mini, 4-pin, Male Connector (minifast®)	★
Hardware Adjustments		
Standard		**Standard**
J1[(8)(9)]	Local Zero Adjustment Only	★
J3[(8)(9)]	No Local Zero or Span Adjustment	★
Transient Protection		
Standard		**Standard**
T1[(10)]	Transient Protection Terminal Block	★
Software Configuration		
Standard		**Standard**
C1[(8)]	Custom Software Configuration (Completed CDS 00806-0100-4001 required with order)	★
Low Power Output		
Standard		**Standard**
C2[(8)]	0.8–3.2 Vdc Output with Digital Signal Based on HART Protocol (Available with Output code M only)	★
Alarm Limit		
Standard		**Standard**
C4[(8)(11)]	NAMUR alarm and saturation levels, high alarm	★
CN[(8)(11)]	NAMUR alarm and saturation levels, low alarm	★
CR	Custom alarm and saturation signal levels, high alarm	★
CS	Custom alarm and saturation signal levels, low alarm	★
CT	Low alarm (standard Rosemount alarm and saturation levels)	★
Conduit Plug		
Standard		**Standard**
D0	316 SST Conduit Plug	★
Ground Screw		
Standard		**Standard**
V5[(12)]	External Ground Screw Assembly	★

Lower Housing Flushing Connection Options				
	Ring Material	**Number**	**Size (NPT)**	
Standard				**Standard**
F1	316 SST	1	1/4-18 NPT	★
F2	316 SST	2	1/4-18 NPT	★
F3	Alloy C-276	1	1/4-18 NPT	★
F4	Alloy C-276	2	1/4-18 NPT	★
F7	316 SST	1	1/2-14 NPT	★
F8	316 SST	2	1/2-14 NPT	★
F9	Alloy C-276	1	1/2-14 NPT	★
F0	Alloy C-276	2	1/2-14 NPT	★
Typical Model Number: 3051L 2 A A0 D 21 A A F1				

(1) Option code M4 - LCD Display with Local Operator Interface required for local addressing and configuration.
(2) Not available with hazardous certification Option Codes I1, N1, E4, K6, and K8.
(3) Materials of Construction comply with metallurgical requirements highlighted within NACE MR0175/ISO 15156 for sour oil field production environments. Environmental limits apply to certain materials. Consult latest standard for details. Selected materials also conform to NACE MR0103 for sour refining environments.
(4) "Assemble-to" items are specified separately and require a completed model number.
(5) Not available with low-power Option Code M
(6) Available only with output code W - Profibus PA.
(7) Only available with HART 4-20 mA output (output code A).
(8) Not available with fieldbus (output code F) or profibus protocols (output code W).
(9) Local zero and span adjustments are standard unless Option Code J1 or J3 is specified.
(10) The T1 option is not needed with FISCO Product Certifications; transient protection is included in the FISCO product certification codes IA, IE, IF, and IG.
(11) NAMUR-Compliant operation is pre-set at the factory and cannot be changed to standard operation in the field.
(12) The V5 option is not needed with the T1 option; external ground screw assembly is included with the T1 option.

Model	Transmitter Type (Select One)		HD	HG	
3051HD	Differential Pressure Transmitter for High Temperature Processes		•	—	
3051HG	Gage Pressure Transmitter High-Temperature Processes		•—	• •	
Code	**Pressure Ranges (Range/ Min. Span)**				
	3051HD	3051HG			
2	–250 to 250 inH_2O/2.5 inH_2O (–0,62 to 0,62 bar/6,2 mbar)	–250 to 250 inH_2O/2.5 inH_2O (–0,62 to 0,62 bar/6,2 mbar)			
3	–1000 to 1000 inH_2O/10 inH_2O (–2,5 to 2,5 bar/25 mbar)	–407 to 1000 inH_2O/10in H_2O (–1,01 to 2,5 bar/25 mbar)			
4	–300 to 300 psi (–20,7 to 20,7 bar/0.2 bar)	–14.7 to 300 psi/3 psi (–1,01 to 20,7 bar/0,2 bar)			
5	–2000 to 2000 psi (–138 to 138 bar/1,4 bar)	–14.7 to 2000 psi/20 psi (–1,01 to 138 bar/1,4 bar)			
NOTE: 3051HG lower range limit varies with atmospheric pressure.					
Code	**Output**		**HD**	**HG**	
Expanded					
A	4–20 mA with Digital Signal Based on HART Protocol		• •	• •	
F	FOUNDATION fieldbus Protocol		••	••	

M[1]	Low-Power, 1–5 Vdc with Digital Signal Based on HART Protocol		• •	• •	
W	Profibus – PA		••	••	
Code	**Process Connection**		**HD**	**HG**	
	Process Flange Material	Drain/Vent			
2	SST	SST	• •	• •	
7[2]	SST	Alloy C-276	••	••	
Code	**Process Isolating Diaphragm**		**HD**	**HG**	
2	316L SST		• •	• •	
3[2]	Alloy C-276		• •	• •	
5	Tantalum		••	••	
Code	**O-ring Material**		**HD**	**HG**	
Expanded					
A	Glass-Filled PTFE		• •	• •	
Code	**Process Fill Fluid**		**HD**	**HG**	
Expanded					
D	*D.C. 200* Silicone		• •	• •	
H	Inert		• •	• •	
N	*Neobee M-20*		••	••	
P	Propylene glyco/water		• •	• •	
Code	**Sensor Module Isolator Material**		**HD**	**HG**	
Expanded					
2	316L SST		• •	• •	
Code	**Sensor Module Fill Fluid**		**HD**	**HG**	
Expanded					
1	Silicone		• •	• •	
2	Inert fill (Halocarbon)		• •	• •	
Code	**Housing Material**	**Conduit Entry Size**	**HD**	**HG**	
Expanded					
A	Polyurethane-covered Aluminum	½–14 NPT	•	•	
B	Polyurethane-covered Aluminum	M20 × 1.5 (CM20)	•	••	
D	Polyurethane-covered Aluminum	G½	•	••	
J	SST	½–14 NPT	•	•	
K	SST	M20 × 1.5 (CM20)	•	••	
M	SST	G½	••	••	

A.5.4 Options (Include with selected model number)

Code	*PlantWeb* Control Anywhere Software	HD	HG	
Expanded				
A01	Advanced Control Function Block Suite • •	• •	• •	
Code	***PlantWeb* Advanced Diagnostic Software**	**HD**	**HG**	
Expanded				
D01	FOUNDATION fieldbus Diagnostics Suite	• •	• •	
Code	**Integral Mount Primary Elements (Optional)**	**HD**	**HG**	
Expanded				
S4[3]	Assemble to Rosemount Annubar or Rosemount 1195 Integral Orifice	• • •	— •—	
Code	**Mounting Bracket Options**	**HD**	**HG**	
Expanded				
B5	Universal Mounting Bracket for 2-in. Pipe or Panel Mount, CS Bolts	• •	• •	
B6	Universal Mounting Bracket for 2-in. Pipe or Panel Mount, SST Bolts	••	••	
Code	**Product Certifications (Optional)**	**HD**	**HG**	
Expanded				
C6	CSA Explosion-proof, Dust Ignition-proof, Intrinsically Safe, and Division 2	•	•	
E4[5]	TIIS Flameproof	•	•	
E5	FM Explosion-proof, Dust Ignition-proof	•	•	
E7	IECEx Flameproof, Dust Ignition-proof	•	•	
E8	ATEX Flameproof and Dust Certification	•	•	
I1[4]	ATEX Intrinsic Safety and Dust	•	•	
I5	FM Intrinsically Safe, Division 2	•	•	
I7	IECEx Intrinsic Safety	•	•	
IA	ATEX FISCO Intrinsic Safety	•	•	
IE	FM FISCO Intrinsically Safe	•	•	
K5	FM Explosion-proof, Dust Ignition-proof, Intrinsically Safe, and Division 2	•	•	
K6[5]	CSA and ATEX Explosion-proof, Intrinsically Safe, and Division 2 (combination of C6 and K8)	•	•	
K7	SAA Flameproof, Dust Ignition-proof, Intrinsic Safety, and Type n (combination of I7, N7, and E7)	•	•	
K8[5]	ATEX Flameproof, Intrinsic Safety, Type n, Dust (combination of E8, I1, and N1)	•	•	
KB	FM and CSA Explosion-proof, Dust Ignition-Proof, Intrinsically Safe, and Division 2 (combination of K5 and C6)	•	•	
KD[5]	CSA, FM, and ATEX Explosion-proof and Intrinsically Safe (combination of K5, C6, I1, and E8)	•	•	
N1[5]	ATEX Type n Certification and Dust	•	•	

N7	IECEx Type n Certification	•	•	
E2	INMETRO Flameproof	—	•	
I2	INMETRO Intrinsic Safety	—	•	
K2	INMETRO Flameproof, Intrinsic Safety	—	•	
DW	NSF drinking water approval	•—	•	
Code	**Bolting Material**	**HD**	**HG**	
Expanded				
L4	Austenitic 316 SST Bolts	•	•••	
Code	**Display and Interface Options**	**HD**	**HG**	
Expanded				
M4	LCD Display with Local Operator Display	• •	• •	
M5	LCD Display for Aluminum Housing *(Housing codes A, B, C, and D only)*	• •	• •	
M6	LCD Display for SST Housing *(Housing codes J, K, L, and M only)*	•	•••	
Code	**Calibration Certification**	**HD**	**HG**	
Expanded				
Q4	Calibration Certificate	•	•	
QG	Calibration Certificate and GOST Verification Certificate	• •	• •	
QP	Calibration Certificate and tamper evident seal	• •	• •	
Code	**Material Traceability Certification**	**HD**	**HG**	
Expanded				
Q8	Material traceability certification per EN 10204 3.1	•	•	
Code	**Zero/Span Adjustment**	**HD**	**HG**	
Expanded				
J1[(5)(6)]	Local Zero Adjustment Only	•	•	
J3[(5)(6)]	No Local Zero or Span Adjustment	• •	• •	
Code	**Transient Terminal Block**	**HD**	**HG**	
Expanded				
T1	Transient Protection Terminal Block	•	•	
Code	**Software Configuration**	**HD**	**HG**	
Expanded				
C1[(5)]	Custom Software Configuration (Completed CDS 00806-0100-4001 required with order)	• •	• •	
Code	**Lower Power Output**	**HD**	**HG**	
Expanded				
C2[(5)]	0.8–3.2 Vdc Output with Digital Signal Based on HART Protocol *(Output Code M only)*	•	•	

Code	Alarm Limit	HD	HG	
Expanded				
C4[(5)(7)]	Analog Output Levels Compliant with NAMUR Recommendation NE 43	• •	• •	
CN[(5)(7)]	Analog Output Levels Compliant with NAMUR Recommendation NE 43: Alarm Configuration–Low	•	•	
Code	**Pressure Testing**	**HD**	**HG**	
Expanded				
P1	Hydrostatic Testing with Certificate	• •	• •	
Code	**Cleaning Process Area**	**HD**	**HG**	
Expanded				
P2	Cleaning for Special Service	•	•	
Code	**Flange Adapters**	**HD**	**HG**	
Expanded				
DF	1/2–14 NPT flange adapters—SST	• •	• •	
Code	**Vent/Drain Valves**	**HD**	**HG**	
Expanded				
D8	Ceramic Ball Drain/Vents	•	•	
Code	**Conduit Plug**	**HD**	**HG**	
Expanded				
DO	316 SST Conduit Plug	• •	• •	
Code	**Ground Screw**	**HD**	**HG**	
Expanded				
V5[(8)]	External Ground Screw Assembly	• •	• •	
Code	**Bar Code Tag**	**HD**	**HG**	
Expanded				
BT	Customer Specified Barcode Tag	• •	• •	
Code	**Quality Certification for Safety**	**HD**	**HG**	
Expanded				
QS	Certificate of FMEDA Data	• •	• •	
Code	**Conduit Electrical Connector**	**HD**	**HG**	
Expanded				
GE	M12, 4-pin, Male Connector (*eurofast*)	• •	• •	
GM	A size Mini, 4-pin, Male Connector (*minifast*)	• •	• •	

Code	A Number Specials	HD	HG	
Expanded				
Axxxx	Specials	• •	• •	
Typical Model Number: 3051HG 2 A 2 2 A H 2 1 A B5				

(1) Not available with hazardous certification Option Codes I1, N1, E4, K6, and K8.
(2) Materials of Construction comply with recommendations per NACE MR0175/ISO 15156 for sour oil field production environments. Environmental limits apply to certain materials. Consult latest standard for details. Selected materials also conform to NACE MR0103 for sour refining environments.
(3) "Assemble-to" items are specified separately and require a completed model number.
(4) Not available with Low Power code M.
(5) Not available with fieldbus (output code F) or profibus protocols (output code W).
(6) Local zero and span adjustments are standard unless Option Code J1 or J3 is specified.
(7) NAMUR-Compliant operation is pre-set at the factory and cannot be changed to standard operation in the field.
(8) The V5 option is not needed with the T1 option; external ground screw assembly is included with the T1 option.

A.6 Options

Standard Configuration

Unless otherwise specified, transmitter is shipped as follows:

Engineering units ***Differential/Gage*:** ***Absolute/3051T*:**	 inH_2O (Range 0, 1, 2, and 3) psi (Range 4 and 5) psi (all ranges)
4 mA (1 Vdc)[(1)]:	0 (engineering units above)
20 mA (5 Vdc):	Upper range limit
Output:	Linear
Flange type:	Specified model code option
Flange material:	Specified model code option
O-ring material:	Specified model code option
Drain/vent:	Specified model code option
Integral meter:	Installed or none
Alarm[(1)]:	Upscale
Software tag:	(Blank)

(1) Not applicable to fieldbus.

Custom Configuration HART protocol only[(1)]

If Option Code C1 is ordered, the customer may specify the following data in addition to the standard configuration parameters.

- Output Information
- Transmitter Information
- LCD display Configuration
- Hardware Selectable Information
- Signal Selection

Refer to the “HART Protocol C1 Option Configuration Data Sheet” document number 00806-0100-4001.

(1)Not applicable to fieldbus.

Tagging (3 options available)

- Standard SST hardware tag is wired to the transmitter. Tag character height is 0.125 in. (3,18 mm), 56 characters maximum.
- Tag may be permanently stamped on transmitter nameplate upon request, 56 characters maximum.
- Tag may be stored in transmitter memory (30 characters maximum). Software tag is left blank unless specified.

Commissioning tag (fieldbus only)

A temporary commissioning tag is attached to all transmitters. The tag indicates the device ID and allows an area for writing the location.

Optional Rosemount 304, 305, or 306 Integral Manifolds

Factory assembled to 3051C and 3051T transmitters. Refer to the following Product Data Sheet (document number 00813-0100-4839 for Rosemount 304 and 00813-0100-4733 for Rosemount 305 and 306) for additional information.

Optional Diaphragm and Sanitary Seals

Refer to Product Data Sheet 00813-0100-4016 or 00813-0201-4016 for additional information.

Output Information(1)

Output range points must be the same unit of measure. Available units of measure include:

inH2O	inH2O@4 °C(1)	psi	Pa
inHg	ftH2O	bar	kPa
mmH2O	mmH2O@4 °C(1)	mbar	torr
mmHg	g/cm2	kg/cm2	atm

(1) Not available on low power or previous versions.

LCD display

M5 Digital Display, 5-Digit, 2-Line LCD

- Direct reading of digital data for higher accuracy
- Displays user-defined flow, level, volume, or pressure units
- Displays diagnostic messages for local troubleshooting
- 90-degree rotation capability for easy viewing

M6 Digital Display with 316 Stainless Steel Cover

- For use with stainless steel housing option (housing codes J, K, and L)

Local Span and Zero Adjustment[1]

Transmitters ship with local span and zero adjustments standard unless otherwise specified.

- Non-interactive external zero and span adjustments ease calibration
- Magnetic switches replace standard potentiometer adjustments to optimize performance

J1 Local Zero Adjustment Only[1]

J3 No Local Zero or Span Adjustment[1]

Bolts for Flanges and Adapters

- Options permit bolts for flanges and adapters to be obtained in various materials
- Standard material is plated carbon steel per ASTM A449, Type 1

L4 Austenitic 316 Stainless Steel Bolts

L5 ASTM A 193, Grade B7M Bolts

L6 Alloy K-500 Bolts

Rosemount 3051C Coplanar Flange and 3051T Bracket Option

B4 Bracket for 2-in. Pipe or Panel Mounting

- For use with the standard Coplanar flange configuration
- Bracket for mounting of transmitter on 2-in. pipe or panel
- Stainless steel construction with stainless steel bolts

Rosemount 3051H Bracket Options

B5 Bracket for 2-in. Pipe or Panel Mounting

- For use with the 3051H Pressure Transmitter for high process temperatures
- Carbon steel construction with carbon steel bolts

B6 B5 Bracket with SST Bolts

- Same bracket as the B5 option with Series 300 stainless steel bolts.

Traditional Flange Bracket Options

B1 Bracket for 2-in. Pipe Mounting

- For use with the traditional flange option
- Bracket for mounting on 2-in. pipe
- Carbon steel construction with carbon steel bolts
- Coated with polyurethane paint

(1)Not applicable to fieldbus.

B2 Bracket for Panel Mounting

- For use with the traditional flange option
- Bracket for mounting transmitter on wall or panel
- Carbon steel construction with carbon steel bolts
- Coated with polyurethane paint

B3 Flat Bracket for 2-in. Pipe Mounting

- For use with the traditional flange option
- Bracket for vertical mounting of transmitter on 2-in. pipe
- Carbon steel construction with carbon steel bolts
- Coated with polyurethane paint

B7 B1 Bracket with SST Bolts

- Same bracket as the B1 option with Series 300 stainless steel bolts

B8 B2 Bracket with SST Bolts

- Same bracket as the B2 option with Series 300 stainless steel bolts

B9 B3 Bracket with SST Bolts

- Same bracket as the B3 option with Series 300 stainless steel bolts

BA Stainless Steel B1 Bracket with SST Bolts

- B1 bracket in stainless steel with Series 300 stainless steel bolts

BC Stainless Steel B3 Bracket with SST Bolts

- B3 bracket in stainless steel with Series 300 stainless steel bolts

Shipping weights

Table A-6. Transmitter weights without options

Transmitter	Add weight In lb (kg)
3051C	6.0 (2,7)
3051L	Table A-7
3051H	13.6 (6,2)
3051T	3.0 (1,4)

Table A-7. 3051L weights without options

Flange	Flush lb. (kg)	2-in. Ext. lb (kg)	4-in. Ext. lb (kg)	6-in. Ext. lb (kg)
2-in., 150	12.5 (5,7)	—	—	—
3-in., 150	17.5 (7,9)	19.5 (8,8)	20.5 (9,3)	21.5 (9,7)
4-in., 150	23.5 (10,7)	26.5 (12,0)	28.5 (12,9)	30.5 (13,8)
2-in., 300	17.5 (7,9)	—	—	—
3-in., 300	22.5 (10,2)	24.5 (11,1)	25.5 (11,6)	26.5 (12,0)
4-in., 300	32.5 (14,7)	35.5 (16,1)	37.5 (17,0)	39.5 (17,9)
2-in., 600	15.3 (6,9)	—	—	—
3-in., 600	25.2 (11,4)	27.2 (12,3)	28.2 (12,8)	29.2 (13,2)
DN 50/PN 40	13.8 (6,2)	—	—	—
DN 80/PN 40	19.5 (8,8)	21.5 (9,7)	22.5 (10,2)	23.5 (10,6)
DN 100/ PN 10/16	17.8 (8,1)	19.8 (9,0)	20.8 (9,5)	21.8 (9,9)
DN 100/ PN 40	23.2 (10,5)	25.2 (11,5)	26.2 (11,9)	27.2 (12,3)

Table A-8. Transmitter options weights

Code	Option	Add lb (kg)
J, K, L, M	Stainless Steel Housing(T)	3.9 (1,8)
J, K, L, M	Stainless Steel Housing (C, L, H, P)	3.1 (1,4)
M5	LCD display for Aluminum Housing	0.5 (0,2)
M6	LCD display for SST Housing	1.25 (0,6)
B4	SST Mounting Bracket for Coplanar Flange	1.0 (0,5)
B1 B2 B3	Mounting Bracket for Traditional Flange	2.3 (1,0)
B7 B8 B9	Mounting Bracket for Traditional Flange	2.3 (1,0)
BA, BC	SST Bracket for Traditional Flange	2.3 (1,0)
B5 B6	Mounting Bracket for 3051H	2.9 (1,3)
H2	Traditional Flange	2.4 (1,1)
H3	Traditional Flange	2.7 (1,2)
H4	Traditional Flange	2.6 (1,2)
H7	Traditional Flange	2.5 (1,1)
FC	Level Flange—3 in., 150	10.8 (4,9)
FD	Level Flange—3 in., 300	14.3 (6,5)
FA	Level Flange—2 in., 150	10.7 (4,8)
FB	Level Flange—2 in., 300	14.0 (6,3)

Table A-8. Transmitter options weights

Code	Option	Add lb (kg)
FP	DIN Level Flange, SST, DN 50, PN 40	8.3 (3,8)
FQ	DIN Level Flange, SST, DN 80, PN 40	13.7 (6,2)

Table A-9. 3051C differential/gage pressure transmitter range limits

	Range 1 span		Range 2 span		Range 3 span		Range 4 span		Range 5 span	
Units	**min**	**max**	**min**	**max**	**min**	**max**	**min**	**max**	**min**	**max**
inH_2O	0.5	25	2.5	250	10	1000	83.040	8304	553.60	55360
inHg	0.03678	1.8389	0.18389	18.389	0.73559	73.559	6.1081	610.81	40.720	4072.04
ftH_2O	0.04167	2.08333	0.20833	20.8333	0.83333	83.3333	6.9198	691.997	46.13	4613.31
mmH_2O	12.7	635.5	63.553	6355	254	25421	2110.95	211095	14073	1407301
mmHg	0.93416	46.7082	4.67082	467.082	18.6833	1868.33	155.145	15514.5	1034.3	103430
psi	0.01806	0.903	0.0902	9.03183	0.36127	36.127	3	300	20	2000
bar	0.00125	0.06227	0.00623	0.62272	0.02491	2.491	0.20684	20.6843	1.37895	137.895
mbar	1.2454	62.2723	6.22723	622.723	24.9089	2490.89	206.843	20684.3	1378.95	137895
g/cm^2	1.26775	63.3875	6.33875	633.875	25.355	2535.45	210.547	21054.7	1406.14	140614
kg/cm^2	0.00127	0.0635	0.00635	0.635	0.0254	2.54	0.21092	21.0921	1.40614	140.614
Pa	124.545	6227.23	622.723	62160.6	2490.89	249089	20684.3	2068430	137895	13789500
kPa	0.12545	6.2272	0.62272	62.2723	2.49089	249.089	20.6843	2068.43	137.895	13789.5
torr	0.93416	46.7082	4.67082	467.082	18.6833	1868.33	155.145	15514.5	1034.3	103430
atm	0.00123	0.06146	0.00615	0.61460	0.02458	2.458	0.20414	20.4138	1.36092	136.092

When using a Field Communicator, ±5% adjustment is allowed on the sensor limit to allow for unit conversions.

Table A-10. 3051L/3051H pressure transmitter range limits

	Range 2 span		Range 3 span		Range 4 span		Range 5 span	
Units	**min**	**max**	**min**	**max**	**min**	**max**	**min**	**max**
inH_2O	2.5	250	10	1000	83.040	8304	553.60	55360
inHg	0.18389	18.389	0.73559	73.559	6.1081	610.81	40.720	4072.04
ftH_2O	0.20833	20.8333	0.83333	83.3333	6.9198	691.997	46.13	4613.31
mmH_2O	63.553	6355	254	25421	2110.95	211095	14073	1407301
mmHg	4.67082	467.082	18.6833	1868.33	155.145	15514.5	1034.3	103430
psi	0.0902	9.03183	0.36127	36.127	3	300	20	2000
bar	0.00623	0.62272	0.02491	2.491	0.20684	20.6843	1.37895	137.895
mbar	6.22723	622.723	24.9089	2490.89	206.843	20684.3	1378.95	137895
g/cm^2	6.33875	633.875	25.355	2535.45	210.547	21054.7	1406.14	140614
kg/cm^2	0.00635	0.635	0.0254	2.54	0.21092	21.0921	1.40614	140.614
Pa	622.723	62160.6	2490.89	249089	20684.3	2068430	137895	13789500
kPa	0.62272	62.2723	2.49089	249.089	20.6843	2068.43	137.895	13789.5
torr	4.67082	467.082	18.6833	1868.33	155.145	15514.5	1034.3	103430
atm	0.00615	0.61460	0.02458	2.458	0.20414	20.4138	1.36092	136.092

When using a Field Communicator, ±5% adjustment is allowed on the sensor limit to allow for unit conversions.

Table A-11. 3051T gage and absolute pressure transmitter range limits (cont. below with Ranges 3-5)

	Range 1 span		Range 2 span	
Units	**min**	**max**	**min**	**max**
inH_2O	8.30397	831.889	41.5198	4159.45
inHg	0.61081	61.0807	3.05403	305.403
ftH_2O	0.69199	69.3241	3.45998	345.998
mmH_2O	211.10	21130	1054.60	105460.3
mmHg	15.5145	1551.45	77.5723	7757.23
psi	0.3	30	1.5	150
bar	0.02068	2.06843	0.10342	10.3421
mbar	20.6843	2068.43	103.421	10342.11
g/cm^2	21.0921	2109.21	105.461	10546.1
kg/cm^2	0.02109	2.10921	0.10546	10.5461
Pa	2068.43	206843	10342.1	1034212
kPa	2.06843	206.843	10.3421	1034.21
torr	15.5145	1551.45	77.5726	7757.26
atm	0.02041	2.04138	0.10207	10.2069

When using a Field Communicator, ±5% adjustment is allowed on the sensor limit to allow for unit conversions.

Table A-12. 3051T gage and absolute pressure transmitter range limits (cont.)

	Range 3 span		Range 4 span		Range 5 span	
Units	**min**	**max**	**min**	**max**	**min**	**max**
inH_2O	221.439	22143.9	1107.2	110720	55360	276799
inHg	16.2882	1628.82	81.441	8144.098	4072.04	20360.2
ftH_2O	18.4533	1845.33	92.2663	9226.63	4613.31	23066.6
mmH_2O	5634.66	563466	28146.1	2814613	1407301	7036507
mmHg	413.72	41372	2068.6	206860.0	103430	517151
psi	8	800	40	4000	2000	10000
bar	0.55158	55.1581	2.75791	275.7905	137.895	689.476
mbar	551.581	55158.1	2757.91	275790.5	137895	689476
g/cm^2	561.459	56145.9	2807.31	280730.6	140614	703067
kg/cm^2	0.56246	56.2456	2.81228	281.228	140.614	701.82
Pa	55158.1	5515811	275791	27579054	13789500	68947600
kPa	55.1581	5515.81	275.791	27579.05	13789.5	68947.6
torr	413.721	413721	2068.6	206859.7	103430	517151
atm	0.54437	54.4368	2.72184	272.1841	136.092	680.46

When using a Field Communicator, ±5% adjustment is allowed on the sensor limit to allow for unit conversions.

Table A-13. 3051C absolute pressure transmitter range limits

	Range 1 span		Range 2 span		Range 3 span		Range 4 span	
Units	**min**	**max**	**min**	**max**	**min**	**max**	**min**	**max**
inH_2O	8.30397	831.889	41.5198	4151.98	221.439	22143.9	1107.2	110720
inHg	0.61081	61.0807	3.05403	305.403	16.2882	1628.82	81.441	8144.098
ftH_2O	0.69199	69.3241	3.45998	345.998	18.4533	1845.33	92.2663	9226.63
mmH_2O	211.10	21130	6.35308	635.308	5634.66	563466	28146.1	2814613
mmHg	15.5145	1551.45	1055.47	105547	413.72	41372	2068.6	206860.0
psi	0.3	30	1.5	150	8	800	40	4000
bar	0.02068	2.06843	0.10342	10.342	0.55158	55.1581	2.75791	275.7905
mbar	20.6843	2068.43	103.421	10342.1	551.581	55158.1	2757.91	275790.5
g/cm^2	21.0921	2109.21	105.27	105.27	561.459	56145.9	2807.31	280730.6
kg/cm^2	0.02109	2.10921	0.10546	10.546	0.56246	56.2456	2.81228	281.228
Pa	2068.43	206843	10342.1	1034210	55158.1	5515811	275791	27579054
kPa	2.06843	206.843	10.3421	1034.21	55.1581	5515.81	275.791	27579.05
torr	15.5145	1551.45	77.5726	7757.26	413.721	413721	2068.6	206859.7
atm	0.02041	2.04138	0.10207	10.207	0.54437	54.4368	2.72184	272.1841

When using a Field Communicator, ±5% adjustment is allowed on the sensor limit to allow for unit conversions.

A.7 Spare parts

Model 3051C Sensor Modules (Min. Span/Range)	Silicone Fill Part Number	Inert Fill Part Number
Note: One spare part is recommended for every 50 transmitters. *Note: Listed by Range and Process Isolator Order Numbers.*		
–3 to 3/0.1 inH2O, Range 0 (includes Traditional SST flange and SST bolts).		
316L SST	03031-1045-0002	03031-1145-0002
–25 to 25 inH_2O/0.5 inH_2O, Range 1		
316L SST	03031-1045-0012	03031-1145-0012
Alloy C-276	03031-1045-0013	03031-1145-0013
Alloy	03031-1045-0014	03031-1145-0014
Gold-plated *Alloy*	03031-1045-0016	03031-1145-0016
Gold-plated 316 SST	03031-1045-0017	03031-1145-0017
–250 to 250 inH_2O/2.5 inH_2O, Range 2		
316L SST	03031-1045-0022	03031-1145-0022
Alloy C-276	03031-1045-0022	03031-1145-0022
Alloy	03031-1045-0024	03031-1145-0024
Tantalum	03031-1045-0025	03031-1145-0025
Gold-plated *Alloy*	03031-1045-0026	03031-1145-0026
Gold-plated 316 SST	03031-1045-0027	03031-1145-0027
–1000 to 1000 inH_2O/10 inH_2O, Range 3		
316L SST	03031-1045-0032	03031-1145-0032
Alloy C-276	03031-1045-0033	03031-1145-0033
Alloy	03031-1045-0034	03031-1145-0034
Tantalum	03031-1045-0035	03031-1145-0035
Gold-plated *Alloy*	03031-1045-0036	03031-1145-0036
Gold-plated 316 SST	03031-1045-0037	03031-1145-0037
–300 to 300 psi/3 psi, Range 4		
316L SST	03031-1045-2042	03031-1145-2042
Alloy C-276	03031-1045-2043	03031-1145-2043
Alloy	03031-1045-2044	03031-1145-2044
Tantalum	03031-1045-2045	03031-1145-2045
Gold-plated *Alloy*	03031-1045-2046	03031-1145-2046
Gold-plated 316 SST	03031-1045-2047	03031-1145-2047

–2000 to 2000/20 psi, Range 5		
316L SST	03031-1045-2052	03031-1145-2052
Alloy C-276	03031-1045-2053	03031-1145-2053
Alloy	03031-1045-2054	03031-1145-2054
Tantalum	03031-1045-2055	03031-1145-2055
Gold-plated *Alloy*	03031-1045-2056	03031-1145-2056
Gold-plated 316 SST	03031-1045-2057	03031-1145-2057

Rosemount 3051C gage and differential sensor modules (Min. Span/Range)			Silicone fill	Inert fill
			Part number	Part number
Note: One spare part is recommended for every 50 transmitters. *Note: Listed by Range and Process Isolator Order Numbers.*				
	Gage pressure range	**Differential pressure range**		
Range 1	**–25 to 25 in H2O/0.5 in H2O**	**–25 to 25 in H2O/0.5 in H2O**		
316L SST			03031-1045-0012	03031-1145-0012
Alloy C-276			03031-1045-0013	03031-1145-0013
Alloy 400			03031-1045-0014	03031-1145-0014
Gold-plated Alloy 400			03031-1045-0016	03031-1145-0016
Gold-plated 316 SST			03031-1045-0017	03031-1145-0017
Range 2	**–250 to 250 inH_2O/2.5 inH_2O**	**–250 to 250 inH_2O/2.5 inH_2O**		
316L SST			03031-1045-0022	03031-1145-0022
Alloy C-276			03031-1045-0023	03031-1145-0023
Alloy 400			03031-1045-0024	03031-1145-0024
Tantalum			03031-1045-0025	03031-1145-0025
Gold-plated Alloy 400			03031-1045-0026	03031-1145-0026
Gold-plated 316 SST			03031-1045-0027	03031-1145-0027
Range 3	**–407 to 1000 inH_2O/10 inH_2O**	**-1000 to 1000 inH_2O/10 inH_2O**		
316L SST			03031-1045-0032	03031-1145-0032
Alloy C-276			03031-1045-0033	03031-1145-0033
Alloy 400			03031-1045-0034	03031-1145-0034
Tantalum			03031-1045-0035	03031-1145-0035
Gold-plated Alloy 400			03031-1045-0036	03031-1145-0036
Gold-plated 316 SST			03031-1045-0037	03031-1145-0037

Range 4	**–14.2 to 300 psi/3 psi**	**-300 to 300 psi/3 psi**		
316L SST			03031-1045-2042	03031-1145-2042
Alloy C-276			03031-1045-2043	03031-1145-2043
Alloy 400			03031-1045-2044	03031-1145-2044
Tantalum			03031-1045-2045	03031-1145-2045
Gold-plated Alloy 400			03031-1045-2046	03031-1145-2046
Gold-plated 316 SST			03031-1045-2047	03031-1145-2047
Range 5	**–14.2 to 2000 psi/20 psi**	**-2000 to 2000psi/20 psi**		
316L SST			03031-1045-2052	03031-1145-2052
Alloy C-276			03031-1045-2053	03031-1145-2053
Alloy 400			03031-1045-2054	03031-1145-2054
Tantalum			03031-1045-2055	03031-1145-2055
Gold-plated Alloy 400			03031-1045-2056	03031-1145-2056
Gold-plated 316 SST			03031-1045-2057	03031-1145-2057

Rosemount 3051C absolute sensor modules (Min. Span/Range)	**Silicone fill**	**Inert fill**
	Part number	**Part number**
Note: One spare part is recommended for every 50 transmitters. *Note: Listed by Range and Process Isolator Order Numbers.*		
Range 1, 0 to 30 psia/0.3 psia		
316L SST	03031-2020-0012	—
Alloy C-276	03031-2020-0013	—
Alloy 400	03031-2020-0014	—
Gold-plated Alloy 400	03031-2020-0016	—
Gold-plated 316 SST	03031-2020-0017	—
Range 2, 0 to 150/1.5 psia		
316L SST	03031-2020-0022	—
Alloy C-276	03031-2020-0023	—
Alloy 400	03031-2020-0024	—
Gold-plated Alloy 400	03031-2020-0026	—
Gold-plated 316 SST	03031-2020-0027	—
Range 3, 0 to 800 psia/8 psia		
316L SST	03031-2020-0032	—
Alloy C-276	03031-2020-0033	—
Alloy 400	03031-2020-0034	—
Gold-plated Alloy 400	03031-2020-0036	—
Gold-plated 316 SST	03031-2020-0037	—

Range 4, 0 to 400 psia/40 psia		
316L SST	03031-2020-0042	—
Alloy C-276	03031-2020-0043	—
Alloy 400	03031-2020-0044	—
Gold-plated Alloy 400	03031-2020-0046	—
Gold-plated 316 SST	03031-2020-0047	—

Electronics board assemblies	Part number
4-20 mA HART Standard	03031-0001-0002
4-20 mA HART NAMUR compliant	03031-0001-0003
1-5 Vdc HART Low Power	03031-0001-1001
FOUNDATION fieldbus	03031-0001-2001
PROFIBUS PA fieldbus	03031-0001-2101
LCD display	**Part number**
LCD Display Kits	
4-20 mA HART - Aluminum	03031-0193-0101
4-20 mA HART - 316 SST	03031-0193-0111
1-5 Vdc HART Low Power - Aluminum	03031-0193-0001
1-5 Vdc HART Low Power - 316 SST	03031-0193-0011
Fieldbus (FOUNDATION or PROFIBUS PA) - Aluminum	03031-0193-0104
Fieldbus (FOUNDATION or PROFIBUS PA) - 316 SST	03031-0193-0112
LCD Display Only	
4-20 mA HART	03031-0193-0103
1-5 Vdc HART Low Power	03031-0193-0003
Fieldbus (FOUNDATION or PROFIBUS PA)	03031-0193-0105
Terminal block assemblies	**Part number**
4-20 mA HART Output	
Standard terminal block	03031-0332-0003
Transient terminal block (option T1)	03031-0332-0004
1-5 Vdc HART Low Power Output	
Standard terminal block	03031-0332-1001
Transient terminal block (option T1)	03031-0332-1002
Fieldbus (FOUNDATION or PROFIBUS PA)	
Standard terminal block	03031-0332-2001
Transient terminal block (option T1)	03031-0332-2002
FISCO terminal block	03031-0332-2005

Electrical housings (without terminal block)	Part number
Standard - Aluminum	
1/2 - 14 NPT conduit entry	03031-0635-0001
M20 conduit entry	03031-0635-0002
G1/2 conduit entry	03031-0635-0004
Standard - 316 SST	
1/2 - 14 NPT conduit entry	03031-0635-0041
M20 conduit entry	03031-0635-0042
1-5 Vdc HART Low Power - Aluminum	
1/2 - 14 NPT conduit entry	03031-0635-0101
1-5 Vdc HART Low Power - 316 SST	
1/2 - 14 NPT conduit entry	03031-0635-0141
Housing conduit plugs	**Part number**
1/2 NPT Conduit plug	03031-0544-0003
M20 Conduit plug	03031-0544-0001
G1/2 Conduit plug	03031-0544-0004
Housing covers (include o-ring)	**Part number**
Field terminal cover - Aluminum	03031-0292-0001
Field terminal cover - 316 SST	03031-0292-0002
HART electronics cover - Aluminum	03031-0292-0001
HART electronics cover - 316 SST	03031-0292-0002
HART LCD Display cover - Aluminum	03031-0193-0002
HART LCD Display cover - 316 SST	03031-0193-0012
Fieldbus extended electronics cover - Aluminum	03031-0292-0003
Fieldbus extended electronics cover - 316 SST	03031-0292-0004
Fieldbus extended LCD Display cover - Aluminum	03031-0193-0007
Fieldbus extended LCD Display cover - 316 SST	03031-0193-0013
Miscellaneous hardware	**Part number**
Local Zero and Span Kit	03031-0293-0002
External ground screw assembly (option V5)	03031-0398-0001
Flanges	**Part number**
Differential Coplanar Flange	
316 SST	03031-0388-0022
Cast C-276	03031-0388-0023
Cast Alloy 400	03031-0388-0024
Nickel-plated carbon steel	03031-0388-0025

Gage/Absolute Coplanar Flange	
316 SST	03031-0388-1022
Cast C-276	03031-0388-1023
Cast Alloy 40	03031-0388-1024
Nickel-plated carbon steel	03031-0388-1025
Coplanar flange alignment screw (package of 12)	03031-0309-0001
Traditional Flange	
316 SST	03031-0320-0002
Cast C-276	03031-0320-0003
Cast Alloy 400	03031-0320-0004
316 SST - DIN Compliant (Option Code HJ)	03031-1350-0012
Level Flange, Vertical Mount	
2 in., class 150, SST	03031-0393-0221
2 in., class 300, SST	03031-0393-0222
3 in., class 150, SST	03031-0393-0231
3 in., class 300, SST	03031-0393-0232
DIN, DN 50, PN 40	03031-0393-1002
DIN, DN 80, PN 40	03031-0393-1012
Flange adapter kits (each kit contains parts for one DP transmitter or two GP/AP transmitters)	**Part number**
CS bolts, glass-filled PTFE O-Rings	
SST adapters	03031-1300-0002
Cast Alloy C-276 adapters	03031-1300-0003
Alloy 400 adapters	03031-1300-0004
Nickel-plated carbon steel adapters	03031-1300-0005
SST bolts, glass-filled PTFE O-Rings	
SST adapters	03031-1300-0012
Cast Alloy C-276 adapters	03031-1300-0013
Alloy 400 adapters	03031-1300-0014
Nickel-plated carbon steel adapters	03031-1300-0015
CS bolts, graphite-filled PTFE O-Rings	
SST adapters	03031-1300-0102
Cast Alloy C-276 adapters	03031-1300-0103
Alloy 400 adapters	03031-1300-0104
Nickel-plated carbon steel adapters	03031-1300-0105
SST bolts, graphite-filled PTFE O-Rings	
SST adapters	03031-1300-0112
Cast Alloy C-276 adapters	03031-1300-0113

Alloy 400 adapters	03031-1300-0114
Nickel-plated carbon steel adapters	03031-1300-0115
Flange adapters	**Part number**
1/2 - 14 NPT Adapters	
316 SST	02024-0069-0002
Cast C-276	02024-0069-0003
Cast Alloy 400	02024-0069-0004
Nickel-plated carbon steel	02024-0069-0005
Socket Weld Adapters	
316 SST	02024-0069-1002
Cast C-276	02024-0069-1003
Cast Alloy 400	02024-0069-1004
O-Ring packages (package of 12)	**Part number**
Electronics housing, cover	03031-0232-0001
Electronics housing, module	03031-0233-0001
Process flange, glass-filled PTFE (White)	03031-0234-0001
Process flange, graphite-filled PTFE (Black)	03031-0234-0002
Process flange for 3051H, PTFE (White)	02051-0167-0001
Flange adapter, glass-filled PTFE (Light Brown)	03031-0242-0001
Flange adapter, graphite-filled PTFE (Black)	03031-0242-0002
Bolt kits	**Part number**
COPLANAR FLANGE	
Flange Bolt Kit {44mm (1.75 in.)} (set of 4)	
Carbon steel	03031-0312-0001
316 SST	03031-0312-0002
ASTM A 193, Grade B7M	03031-0312-0003
Alloy K-500	03031-0312-0004
Flange/Adapter Bolt Kit {73mm (2.88 in.)} (set of 4)	
Carbon steel	03031-0306-0001
316 SST	03031-0306-0002
ASTM A 193, Grade B7M	03031-0306-0003
Alloy K-500	03031-0306-0004

TRADITIONAL FLANGE	
Differential Flange/Adapter Bolt Kit {44mm (1.75 in.)} (set of 8)	
Carbon steel	03031-0307-0001
316 SST	03031-0307-0002
ASTM A 193, Grade B7M	03031-0307-0003
Alloy K-500	03031-0307-0004
Gage/Absolute Flange/Adapter Bolt Kit {44mm (1.75 in.)} (set of 6)	
Carbon steel	03031-0307-1001
316 SST	03031-0307-1002
ASTM A 193, Grade B7M	03031-0307-1003
Alloy K-500	03031-0307-1004
Conventional Manifold/Traditional Flange Bolts	
Carbon steel	Use bolts supplied with manifold
316 SST	Use bolts supplied with manifold
Level Flange, Vertical Mount Bolt Kit (Set of 4)	
Carbon steel	03031-0395-0001
316 SST	03031-0395-0002
3051H Process Flange Bolt Kit (Set of 4)	
Carbon Steel	02051-0164-0001
316 SST	02051-0164-0002
Drain/Vent valve kits (each kit contains parts for one transmitter)	**Part number**
Differential Drain/Vent Kits	
316 SST stem and seat kit	01151-0028-0022
Alloy C-276 stem and seat kit	01151-0028-0023
Alloy K-500 stem and Alloy 400 seat kit	01151-0028-0024
316 SST ceramic ball drain/vent kit	03031-0378-0022
Alloy C-276 ceramic ball drain/vent kit	03031-0378-0023
Alloy 400/K-500 ceramic ball drain/vent kit	03031-0378-0024
Gage/Absolute Drain/Vent Kits	
316 SST stem and seat kit	01151-0028-0012
Alloy C-276 stem and seat kit	01151-0028-0013
Alloy K-500 stem and Alloy 400 seat kit	01151-0028-0014
316 SST ceramic ball drain/vent kit	03031-0378-0012
Alloy C-276 ceramic ball drain/vent kit	03031-0378-0013
Alloy 400/K-500 ceramic ball drain/vent kit	03031-0378-0014

Mounting brackets	Part number
3051C and 3051L Coplanar Flange Bracket kit	
B4 bracket, SST, 2-in. pipe mount, SST bolts	03031-0189-0003
3051T Inline Bracket Kit	
B4 bracket, SST, 2-in. pipe mount, SST bolts	03031-0189-0004
3051C Traditional Flange Bracket Kits	
B1 bracket, 2-in. pipe mount, CS bolts	03031-0313-0001
B2 bracket, panel mount, CS bolts	03031-0313-0002
B3 flat bracket, 2-in. pipe mount, CS bolts	03031-0313-0003
B7 (B1 bracket, SST bolts)	03031-0313-0007
B8 (B2 bracket, SST bolts)	03031-0313-0008
B9 (B3 bracket, SST bolts)	03031-0313-0009
BA (SST B1 bracket, SST bolts)	03031-0313-0011
BC (SST B3 bracket, SST bolts)	03031-0313-0013
3051H Bracket Kits	
B5 universal bracket, 2-in. pipe and panel mount, CS bolts	03051-1081-0001
B6 universal bracket, 2-in. pipe and panel mount, SST bolts	03051-1081-0002
FOUNDATION fieldbus upgrade kit	**Part number**
Aluminum Housing	03031-0198-0001
316 SST Housing	03031-0198-0002

Figure A-1. Spare parts diagram

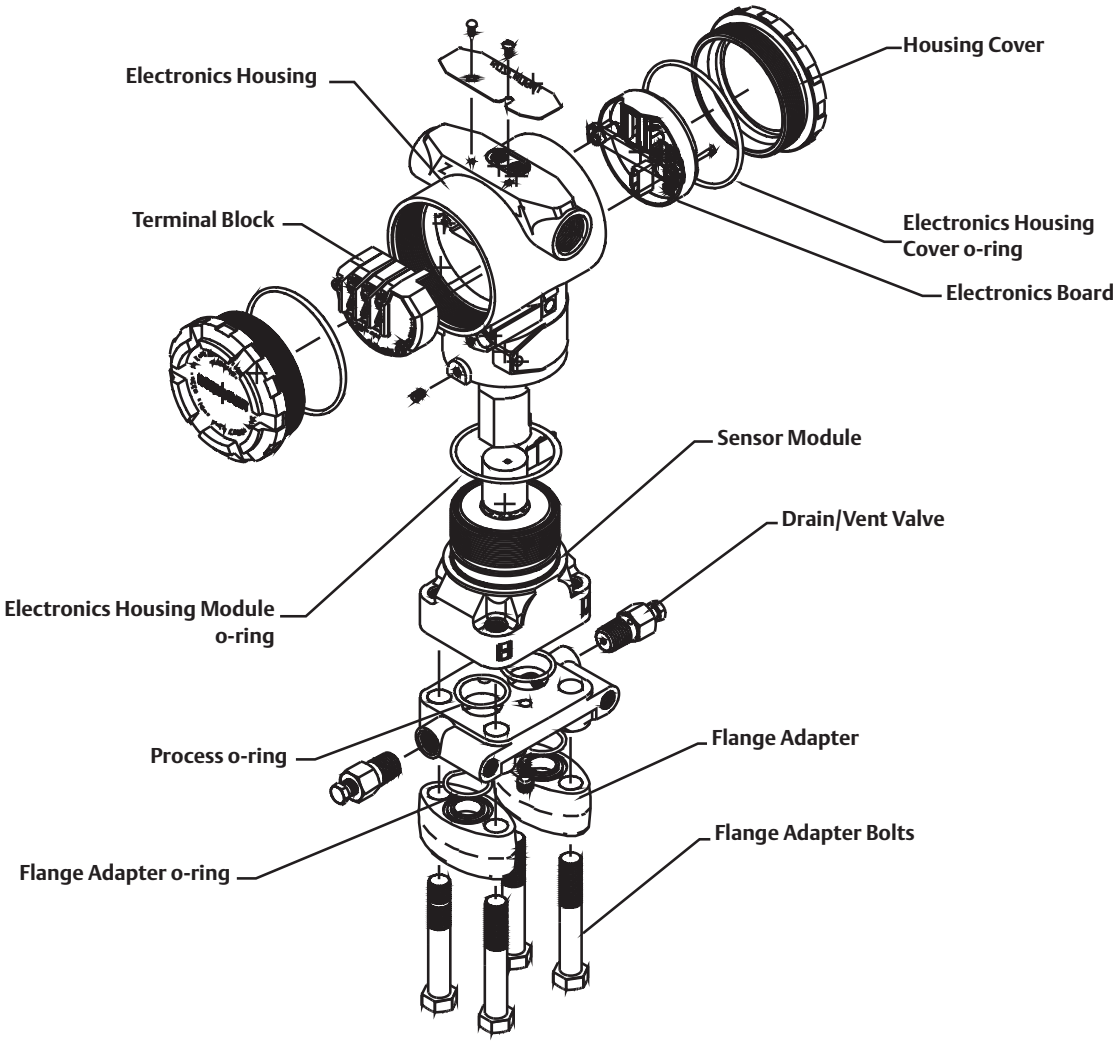

Appendix B Product certifications

Overview . . . . . page 175
Safety messages . . . . . page 175
Approved manufacturing locations . . . . . page 176
European directive information . . . . . page 176
Hazardous locations certifications . . . . . page 177
Approval drawings . . . . . page 184

B.1 Overview

This Appendix contains information on Approved manufacturing locations, European directive information, Ordinary Location certification, Hazardous Locations Certifications and approval drawings for HART protocol.

B.2 Safety messages

Procedures and instructions in this section may require special precautions to ensure the safety of the personnel performing the operations. Information that raises potential safety issues is indicated by a warning symbol (⚠). Refer to the following safety messages before performing an operation preceded by this symbol.

B.2.1 Warnings

⚠ WARNING

Explosions could result in death or serious injury:

Installation of this transmitter in an explosive environment must be in accordance with the appropriate local, national, and international standards, codes, and practices. Please review this section of the Model 3051 reference manual for any restrictions associated with a safe installation.

- Before connecting a HART-based communicator in an explosive atmosphere, make sure the instruments in the loop are installed in accordance with intrinsically safe or non-incendive field wiring practices.
- In an Explosion-Proof/Flameproof installation, do not remove the transmitter covers when power is applied to the unit.

Process leaks may cause harm or result in death.

- Install and tighten process connectors before applying pressure.

Electrical shock can result in death or serious injury.

- Avoid contact with the leads and terminals. High voltage that may be present on leads can cause electrical shock.

⚠ WARNING

Cable gland and plug must comply with the requirements listed on the certificates.

B.3 Approved manufacturing locations

Emerson Process Management - Rosemount Inc. — Chanhassen, Minnesota, USA
Emerson Process Management — Wessling, Germany
Emerson Process Management Asia Pacific Private Limited — Singapore
Emerson Process Management — Beijing, China
Emerson Process Management — Daman, India

B.4 European directive information

The most recent revision of the EC declaration of conformity can be found at www.emersonprocess.com.

B.4.1 Ordinary location certification for factory mutual

As standard, the transmitter has been examined and tested to determine that the design meets basic electrical, mechanical, and fire protection requirements by FM, a nationally recognized testing laboratory (NRTL) as accredited by the Federal Occupational Safety and Health Administration (OSHA).

B.5 Hazardous locations certifications

B.5.1 North american certifications

FM Approvals

E5 Explosion-Proof and Dust Ignition Proof
Certificate No: 0T2H0.AE
Applicable Standards: FM Class 3600 – 1998, FM Class 3615 – 2006, FM Class 3810 – 2005, ANSI/NEMA 250 - 2003

Markings: Explosion-Proof for Class I, Division 1, Groups B, C, and D.

Dust-Ignition-Proof for Class II, Division 1, Groups E, F, G; and Class III, Division 1.
T5 (Ta = -50 °C to +85 °C), Factory Sealed, Enclosure Type 4x

I5 Intrinsically Safe and Non-Incendive
Certificate No: 1Q4A4.AX
Applicable Standards: FM Class 3600 – 1998, FM Class 3610 – 2010, FM Class 3611 – 2004, FM Class 3810 – 2005
Markings: Intrinsically Safe for use in Class I, Division 1, Groups A, B, C, and D; Class II, Division 1, Groups E, F, and G; Class III, Division 1 when connected per Rosemount drawing 03031-1019 and 00375-1130 (When used with a Field Communicator); Non-incendive for Class I, Division 2, Groups A, B, C, and D.
Temperature Code: T4 (Ta = -50 °C to +40 °C), T3 (Ta = -50 °C to +85 °C), Enclosure Type 4x.

Special Conditions for Safe Use:

1.) The Rosemount 3051 transmitter housing contains aluminum and is considered a potential risk of ignition by impact or friction. Care must be taken into account during installation and use to prevent impact and friction.

2.) The Rosemount 3051 transmitter with the transient terminal block (Option code T1) will not pass the 500Vrms dielectric strength test and this must be taken into account during installation.

CSA international

All CSA hazardous location approved transmitters are certified to ANSI/ISA 12.27.01-2003.

E6 Explosion-Proof, Dust Ignition Proof and Class I Division 2
Certificate No.: 1053834
Applicable Standards: CSA Std. C22.2 No. 142 – M1987, CSA Std. C22.2 No. 30 – M1986, CSA Std. C22.2 No. 213 – M1987, ANSI/ISA 12.27.01-2003.
Markings: Explosion-Proof for Class I, Division 1, Groups B, C, and D.
Dust-Ignition-Proof for Class II and Class III, Division 1, Groups E, F, and G.
Suitable for Class I, Division 2 Groups A, B, C, and D. Enclosure type 4X, factory sealed.
Single Seal (See Drawing 03031-1053).

I6 Intrinsically Safe
Certificate No.: 1053834
Applicable Standards: CSA Std. C22.2 No. 142 – M1987, CSA Std. C22.2 No. 157 – 92, ANSI/ISA 12.27.01-2003.
Markings: Intrinsically safe for Class I, Division 1, Groups A, B, C, and D when connected in accordance with Rosemount drawings 03031-1024. Temperature Code T3C. Enclosure Type 4X, Single Seal. Single Seal (See Drawing 03031-1053).

European certifications

E8 ATEX Flame-Proof
Certification No.: KEMA 00ATEX2013X
Applicable Standards: EN60079-0: 2009, EN60079-1: 2007, EN60079-26: 2007, IEC 60079-0:2011
Markings: Ⓔx II 1/2 G, Ex d IIC T6 (–50 ≤ Ta ≤ 65 °C) Ga/Gb,
Ex d IIC T5 (–50 ≤ Ta ≤ 80 °C) Ga/Gb,
CE 1180

Process Temp	Ambient Temp	Temp Class
-50 to 65	-50 to 65	T6
-50 to 80	-50 to 80	T5

Special Conditions for Safe Use (X):

1.) In case of repair, contact the manufacturer for information on the dimensions of the flameproof joints.

2.) This device contains a thin wall diaphragm. Installation, maintenance and use shall take into account the environmental conditions to which the diaphragm will be subjected. The manufacturer's instructions for installation and maintenance shall be followed in detail to assure safety during its expected lifetime.

3.) The capacitance of the wrap around label to the enclosure, 1.6E-9 F, exceeds the limit in Table 9 of IEC 60079-0. The user shall determine suitability for the specific application.

4.) Wait at least 5 minutes after powering down device before opening covers, when a hazardous atmosphere is present.

I1 ATEX Intrinsic Safety and Dust
Certificate No.: BAS 97ATEX1089X
Applicable Standards: IEC60079-0:2011, EN60079-11: 2012, EN60079-31: 2009,
Markings: Ⓔx II 1 GD, Ex ia IIC T4 Ga (–60 ≤ Ta ≤ +70 °C),
Ex ia IIC T5 Ga (–60 ≤ Ta ≤ +40 °C)
Ex ta IIIC T50 °C T_{500} 60°C Da, Ui = 30 V Ii = 200 mA Pi = 0.9 W Ci = 0.012 µF, IP66,
CE 1180

Special Conditions for Safe Use (X):

1.) The apparatus is not capable of withstanding the 500 V insulation test required by EN60079-11. This must be taken into account when installing the apparatus.

2.) The enclosure may be made of aluminum alloy and given a protective polyurethane paint finish; however care should be taken to protect it from impact or abrasion if located in Zone 0.

N1 ATEX Non-incendive/Type n and Dust
Certification No.: BAS 00ATEX3105X
Applicable Standards: IEC60079-0:2011, EN60079-15:2010, EN60079-31:2009
Markings: Ex II 3 GD, Ex nA IIC Gc T5 (–40 ≤ Ta ≤ 70 °C),
Ex ta IIIC T50 °C T_{500} 60°C Da, IP66
CE 1180

Specific Conditions for Safe Use (X):

1.) The apparatus is not capable of withstanding the 500 V insulation test required by EN60079-15. This must be taken into account when installing the apparatus.

2.) This device contains a thin wall diaphragm. Installation, maintenance, and use shall take into account the environmental conditions to which the diaphragm will be subjected. The manufacturer's instructions for installation and maintenance shall be followed in detail to assure safety during its expected lifetime. In case of repair, contact the manufacturer for more information on the dimensions of the flameproof joints.

Japanese certifications

E4 TIIS Flame-Proof

Certificate	Description
TC15850	3051C/D/1 4–20 mA HART — no meter
TC15851	3051C/D/1 4–20 mA HART — with meter
TC15854	3051T/G/1 4–20 mA HART, SST, Silicon — no meter
TC15855	3051T/G/1 4–20 mA HART, Alloy C-276, Silicon — no meter
TC15856	3051T/G/1 4–20 mA HART, SST, Silicon — with meter
TC15857	3051T/G/1 4–20 mA HART, Alloy C-276, Silicon — with meter

Markings: Ex d IIC T6

I4 TIIS Intrinsic Safety
Certification No.: TC16406
Markings: Ex ia IIC T4

IECEx certifications

E7 IECEx Flame-proof
Certification No.: IECEx KEM 09.0034X
Applicable Standards: IEC60079-0:2011, IEC60079-1:2007-04, IEC60079-26:2006,
Markings: Ex d IIC T5...T6 Ga/Gb, T5 (-50 °C ≤ Ta ≤ 80 °C)/T6 (-50 °C ≤ Ta ≤ 65 °C)

Process Temp	Ambient Temp	Temp Class
-50 to 65	-50 to 65	T6
-50 to 80	-50 to 80	T5

Conditions of Certification (X):

1.) This device contains a thin wall diaphragm. Installation, maintenance, and use shall take into account the environmental conditions to which the diaphragm will be subjected. The manufacturer's instructions for installation and maintenance shall be followed in detail to assure safety during its expected lifetime.

2.) For information on the dimensions of the flameproof joints the manufacturer shall be contacted.

3.) The capacitance of the wrap around label to the enclosure, 1.6E-9 F, exceeds the limit in Table 9 of IEC 60079-0. The user shall determine suitability for the specific application.

4.) Wait at least 5 minutes after powering down device before opening covers, when a hazardous atmosphere is present.

I7 IECEx Intrinsic Safety
Certification No.: IECEx BAS 09.0076X
Applicable Standards: IEC60079-0:2011, IEC 60079-11:2006
Markings: Ex ia IIC T5 Ga (-60°C ≤ Ta ≤ 40°C), Ex ia IIC T4 Ga (-60°C ≤ Ta ≤ 70°C)
Ui = 30V, Ii = 200mA, Pi = 0.9W, Ci = 0.012 µF, Li = 0

Conditions of Certification (X):

1.) If the apparatus is fitted with an optional 90V transient suppressor, it is not capable of withstanding the 500V insulation test required by IEC 60079-11. This must be taken into account when installing the apparatus.

2.) The enclosure may be made of aluminum alloy and given a protective polyurethane paint finish; however, care should be taken to protect it from impact or abrasion if located in Zone 0.

N7 IECEx Type 'n'
Certification No.: IECEx BAS 09.0077X
Applicable Standards: IEC60079-0:2011, IEC60079-15:2010
Markings: Ex nA IIC T5 Gc (-40 ≤ Ta ≤ 70 °C)

Conditions of Certification (X):

The apparatus is not capable of withstanding the 500V insulation test required by IEC 60079-15. This must be taken into account when installing the apparatus.

Inmetro certifications

E2 Flameproof
Certificate No: CEPEL 97.0073X (Mfg USA and Singapore)
Certificate No: CEPEL 07.1383X (Mfg Brazil)
Applicable Standards: IEC60079-0:2008, IEC60079-1:2009, IEC60079-26:2008, IEC60529:2009
Markings: Ex d IIC T6 Ga/Gb (-50°C ≤ T_a ≤ +65°C)
Ex d IIC T5 Ga/Gb (-50°C ≤ T_a ≤ +80°C)
IP66W

I2 Intrinsic Safety
Certificate No.: CEPEL 97.0072X (Mfg USA and Singapore)
Certificate No.: CEPEL 07.1412X (Mfg Brazil)
Applicable Standards: IEC60079-0:2008, IEC60079-11:2009, IEC60079-26:2008, IEC60529:2009
Markings: Ex ia IIC Ga T5 (-20°C ≤ T_a ≤ +40°C)
Ex ia IIC Ga T4 (-20°C ≤ T_a ≤ +70°C)
IP66W, Ui=30V, Ii= 200mA, Pi=0.9W, Ci =0.012uF, Li=Desprezivel

Specific Conditions for Safe Use (X):

See Certificate.

China certifications

E3 Flameproof and Dust
NEPSI Certificate No.: GYJ091065X
Applicable Standards: GB3836.1-2000, GB3836.4-2000,GB4208-1993, GB12476-2000
Markings: Ex d II C T5/T6, -50°~+80°C (T5), -50°~+65°C (T6), DIP A21 TA T90°C, IP66

Specific Conditions for Safe Use (X):

The symbol "X" placed after the certificate number indicates special condition for safe use, that is the transmitter contains a thin wall diaphragm. Installation, maintenance, and use shall not only take into account the environmental condition, but also follow the manufacturer's instructions.

2.1 The relation between ambient temperature range and temperature class is as follows:

T_a	Temperature class
-50 °C to 80 °C	T5
-50 °C to 65 °C	T6

When used in combustible dust environment, the maximum ambient temperature is 80 °C.

2.2 The earth connection facility in the enclosure should be connected reliably.

2.3 Cable entry certified by notified body with type of protection Ex d II C in accordance with GB3836.1-2000 and GB3836.2-2000, should be applied when installing in hazardous location. When used in combustible dust environment, cable entry in accordance with IP66 or higher level should be applied.

2.4 Obey the warning "Keep tight when the circuit is alive."

2.5 End users are not permitted to change any component's insides.

2.6 When installing, using, and maintaining the transmitter, observe the following standards
GB3836.13-1997 "Electrical apparatus for explosive gas atmospheres Part 13: Repair and overhaul for apparatus used in explosive gas atmospheres"
GB3836.15-2000 "Electrical apparatus for explosive gas atmospheres Part 15: Electrical installations in hazardous area (other than mines)"
GB3836.16-2006 "Electrical apparatus for explosive gas atmospheres Part 16: Inspection and maintenance of electrical installation (other than mines)"
GB50257-1996 "Code for construction and acceptance of electric device for explosion atmospheres and fire hazard electrical equipment installation engineering"
GB12476.2-2006 "Electrical apparatus for use in the presence of combustible dust Part 1-2: Electrical apparatus protected by enclosures and surface temperature limitation-Selection, installation and maintenance"
GB15577-2007 "Safety regulations for dust explosion prevention and protection"

I3 Intrinsic Safety and Dust
NEPSI Certificate No: GYJ091066X
Applicable Standards: GB3836.1-2000, GB3836.2-2000,GB4208-1993, GB12476-2000
Markings: Ex ia II C T4/T5, -60°~+40°C (T5), -60°~+70°C (T4), DIP A21 TA T80°C

Specific Conditions for Safe Use (X):

1. The relation between ambient temperature range and temperature class is as following:

T_a	Temperature Class
-60 °C +40 °C	T5
-60 °C +70 °C	T4

When used in combustible dust environment, the maximum ambient temperature is -20 °C+40 °C.

2. The earth connection facility in the enclosure should be connected reliably.

3. The maximum internal parameters of the transmitter are as following:
U_i = 30 V, I_i=200 mA, P_i=0.9 W, L_i=0 mH, C_i=0.012 μ F

4. End users is not permitted to change any components insides.

5. When installing, using, and maintaining transmitter, observe following standards:
GB3836.1 1997 “Electrical apparatus for explosive gas atmospheres Part 13: Repair and overhaul for apparatus used in explosive gas atmospheres”
GB3836.15-2000 “Electrical apparatus for explosive gas atmospheres Part 15: Electrical installations in hazardous area (other than mines)”
GB3836.16-2006 “Electrical appartus for explosive gas atmospheres Part 16: Inspection and maintenance of electrical installation (other than mines)”
GB50257-1996 “Code for construction and acceptance of electric device for explosion atmospheres and fire hazard eletrical equipment installation engineering”
GB12476.2-2006 “"Electrical apparatus for use in the presence of combustible dust Part 1-2: Electrical apparatus protected by enclosures and surface temperature limitation-Selection, installation and maintenance"
GB15577-2007 “Safety regulations for dust explosion prevention and protection”

U_i = 30 V
I_i = 200 mA
P_i = 1 W
C_i = 0.012 μF
L_i = 0

N3 China Type n - Non-Sparking
NEPSI Certificate No.: GYJ101111X
Applicable Standards: GB3836.1-2000, GB3836.8-2003
Markings: Ex nA nL IIC T5 (-40 °C < TA < 70 °C)

Specific Conditions for Safe Use (X):

1. Symbol "X" is used to denote specific conditions of use: The apparatus is not capable of withstanding the 500 V test to earth for one minute. This must be taken into consideration during installation.

2. The ambient temperature range is: -40 °C $\leq T_a \leq$ +70 °C

3. Maximum input voltage: 42.4 V.

4. Cable glands, conduit or blanking plugs, certified by NEPSI with Ex e or Ex n protection type and IP66 degree of protection provided by enclosure, should be used on external connections and redundant cable entries.

5. Maintenance should be done in non-hazardous location.

6. End users are not permitted to change any components insides, but to settle the problem in conjunction with manufacturer to avoid damage to the product.

7. When installing, using, and maintaining transmitter, observe following standards:
GB3836.1 1997 “Electrical apparatus for explosive gas atmospheres Part 13: Repair and overhaul for apparatus used in explosive gas atmospheres”
GB3836.15-2000 “Electrical apparatus for explosive gas atmospheres Part 15: Electrical installations in hazardous area (other than mines)”
GB3836.16-2006 “Electrical appartus for explosive gas atmospheres Part 16: Inspection and maintenance of electrical installation (other than mines)”
GB50257-1996 “Code for construction and acceptance of electric device for explosion atmospheres and fire hazard eletrical equipment installation engineering”

Combinations of certifications

Stainless steel certification tag is provided when optional approval is specified. Once a device labeled with multiple approval types is installed, it should not be reinstalled using any other approval types. Permanently mark the approval label to distinguish it from unused approval types.

K1 – E1, N1

K5 – E5, I5

K6 – E5, I5, E6, I6, E1, I1

K7 – E7, I7, N7

K8 – E8, I1

KA – E1, I1, N1, E6, I6

KB – E5, I5, E1, I1

KC – E5, I5, E1, I1

KD – E5, I5, E6, I6, I1

B.6 Approval drawings

B.6.1 Factory mutual 03031-1019

CONFIDENTIAL AND PROPRIETARY INFORMATION IS CONTAINED HEREIN AND MUST BE HANDLED ACCORDINGLY

REVISIONS

REV	DESCRIPTION	CHG. NO.	APP'D	DATE
AE	ADD 3051G	RTC1019922	J.G.	7/11/05
AF	ADD FISCO DETAILS	RTC1021913	N.J.H.	7/9/06
AG	ADD FISCO ENTITY PARAMETERS TO SHT 12	RTC1022876	N.J.H.	10/27/06

ENTITY APPROVALS FOR

3051C	3001C
3051L	3001CL
3051P	3001CH
3051H	3001S
3051CA	3001SL
3051T	3001SH
3051G	

OUTPUT CODE A (4-20 mA HART) I.S. SEE SHEETS 2-5
OUTPUT CODE M (LOW POWER) I.S. SEE SHEETS 6-7
OUTPUT CODE F/W (FIELDBUS) I.S. SEE SHEETS 8-12
ALL OUTPUT CODES NONINCENDIVE SEE SHEET 13

THE ROSEMOUNT TRANSMITTERS LISTED ABOVE ARE F.M. APPROVED AS INTRINSICALLY SAFE WHEN USED IN CIRCUIT WITH F.M. APPROVED BARRIERS WHICH MEET THE ENTITY PARAMETERS LISTED IN THE CLASS I, II, AND III, DIVISION 1 GROUPS INDICATED, TEMP CODE T4. ADDITIONALLY, THE ROSEMOUNT 751 FIELD SIGNAL INDICATOR IS F.M. APPROVED AS INTRINSICALLY SAFE WHEN CONNECTED IN CIRCUIT WITH ROSEMOUNT TRANSMITTERS (FROM ABOVE) AND F.M. APPROVED BARRIERS WHICH MEET THE ENTITY PARAMETERS LISTED FOR CLASS I, II, AND III, DIVISION 1, GROUPS INDICATED, TEMP CODE T4.

TO ASSURE AN INTRINSICALLY SAFE SYSTEM, THE TRANSMITTER AND BARRIER MUST BE WIRED IN ACCORDANCE WITH THE BARRIER MANUFACTURER'S FIELD WIRING INSTRUCTIONS AND THE APPLICABLE CIRCUIT DIAGRAM.

CAD MAINTAINED (MicroStation)

UNLESS OTHERWISE SPECIFIED DIMENSIONS IN INCHES [mm]. REMOVE ALL BURRS AND SHARP EDGES. MACHINE SURFACE FINISH 125

-TOLERANCE-
.X ± .1 [2,5]
.XX ± .02 [0,5]
.XXX ± .010 [0,25]
FRACTIONS ± 1/32
ANGLES ± 2°

DO NOT SCALE PRINT

CONTRACT NO.
DR. MIKE DOBE 03/21/89
CHK'D
APP'D. KELLY ORTH 03/22/89
APP'D. GOVT.

EMERSON. Process Management
ROSEMOUNT®
8200 Market Boulevard • Chanhassen, MN 55317 USA

TITLE INDEX OF I.S. & NONINCENDIVE F.M. FOR 3051C/L/P/H/T AND 3001C/S

SIZE A | FSCM NO | DWG NO. 03031-1019
SCALE N/A | WT. ——— | SHEET 1 OF 13

Form Rev AC

REVISIONS				
REV	DESCRIPTION	CHG. NO.	APP'D	DATE
AG				

BARRIER PARAMETERS (APPLICABLE TO OUTPUT CODES A & M)
Pmax = 1WATT

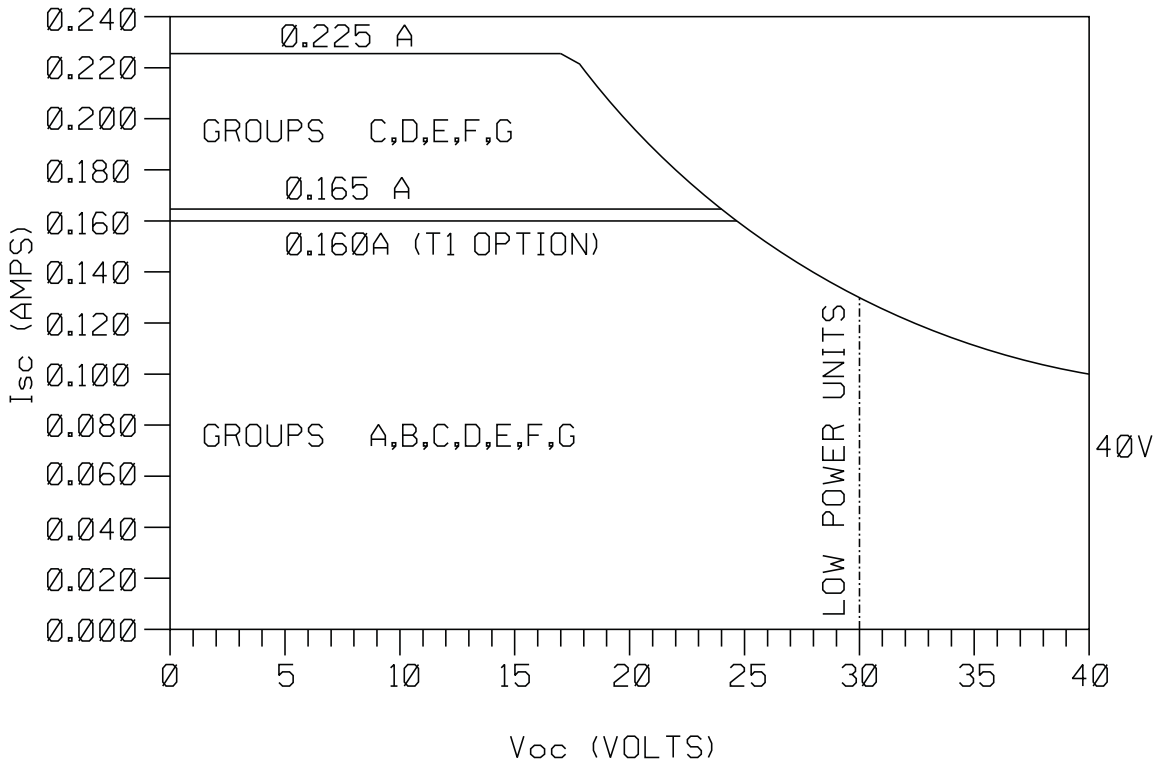

Rosemount Inc.
8200 Market Boulevard
Chanhassen, MN 55317 USA

CAD MAINTAINED (MicroStation)

DR. MIKE DOBE	SIZE A	FSCM NO	DWG NO. 03031-1019	
ISSUED	SCALE N/A	WT. ———		SHEET 2 OF 13

Form Rev AC

REVISIONS				
REV	DESCRIPTION	CHG. NO.	APP'D	DATE
AG				

CIRCUIT DIAGRAM 1
ONE BARRIER OR CONVERTER:
SINGLE OR DUAL CHANNEL

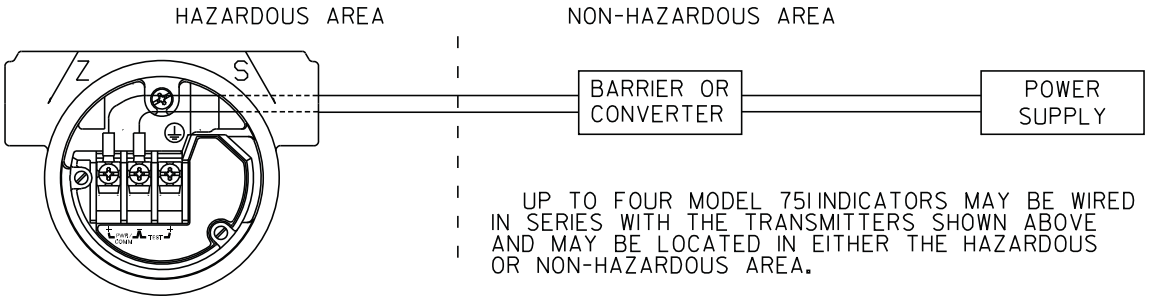

UP TO FOUR MODEL 751 INDICATORS MAY BE WIRED IN SERIES WITH THE TRANSMITTERS SHOWN ABOVE AND MAY BE LOCATED IN EITHER THE HAZARDOUS OR NON-HAZARDOUS AREA.

OUTPUT CODE A
MODELS INCLUDED
305IC, L, P, H, T, CA, G
300IC, CL, CH, S, SL, SH

CIRCUIT DIAGRAM 2
SUPPLY AND RETURN BARRIERS
(ONLY FOR USE WITH BARRIERS APPROVED IN THIS CONFIGURATION)

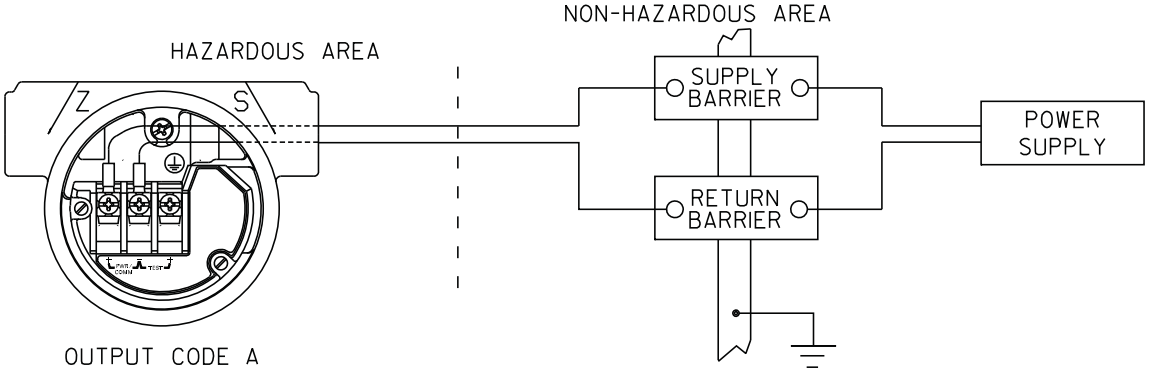

OUTPUT CODE A
MODELS INCLUDED
305IC, L, P, H, T, CA, G
300IC, CL, CH, S, SL, SH

UP TO FOUR MODEL 751 INDICATORS MAY BE WIRED IN SERIES WITH THE TRANSMITTERS SHOWN ABOVE AND MAY BE LOCATED IN EITHER THE HAZARDOUS OR NON-HAZARDOUS AREA.

Rosemount Inc.
8200 Market Boulevard
Chanhassen, MN 55317 USA

CAD MAINTAINED (MicroStation)

DR. MIKE DOBE	SIZE A	FSCM NO	DWG NO. 03031-1019
ISSUED	SCALE N/A	WT. ———	SHEET 3 OF 13

Form Rev AC

REVISIONS				
REV	DESCRIPTION	CHG. NO.	APP'D	DATE
AG				

ENTITY CONCEPT APPROVALS

THE ENTITY CONCEPT ALLOWS INTERCONNECTION OF INTRINSICALLY SAFE APPARATUS TO ASSOCIATED APPARATUS NOT SPECIFICALLY EXAMINED IN COMBINATION AS A SYSTEM. THE APPROVED VALUES OF MAX. OPEN CIRCUIT VOLTAGE (Voc OR Vt) AND MAX. SHORT CIRCUIT CURRENT (Isc OR It) AND MAX. POWER (Voc X Isc/4) OR (Vt X It/4), FOR THE ASSOCIATED APPARATUS MUST BE LESS THAN OR EQUAL TO THE MAXIMUM SAFE INPUT VOLTAGE (Vmax), MAXIMUM SAFE INPUT CURRENT (Imax), AND MAXIMUM SAFE INPUT POWER (Pmax) OF THE INTRINSICALLY SAFE APPARATUS. IN ADDITION, THE APPROVED MAX. ALLOWABLE CONNECTED CAPACITANCE (Ca) OF THE ASSOCIATED APPARATUS MUST BE GREATER THAN THE SUM OF THE INTERCONNECTING CABLE CAPACITANCE AND THE UNPROTECTED INTERNAL CAPACITANCE (C_I) OF THE INTRINSICALLY SAFE APPARATUS, AND THE APPROVED MAX. ALLOWABLE CONNECTED INDUCTANCE (La) OF THE ASSOCIATED APPARATUS MUST BE GREATER THAN THE SUM OF THE INTERCONNECTING CABLE INDUCTANCE AND THE UNPROTECTED INTERNAL INDUCTANCE (L_I) OF THE INTRINSICALLY SAFE APPARATUS.

FOR OUTPUT CODE A

NOTE: ENTITY PARAMETERS LISTED APPLY ONLY TO ASSOCIATED APPARATUS WITH LINEAR OUTPUT.

CLASS I, DIV. 1, GROUPS A AND B

V_{MAX} = 40V	V_T OR V_{OC} IS LESS THAN OR EQUAL TO 40V
I_{MAX} = 165mA	I_T OR I_{SC} IS LESS THAN OR EQUAL TO 165mA
P_{MAX} = 1 WATT	$(\frac{V_T \times I_T}{4})$ OR $(\frac{V_{OC} \times I_{SC}}{4})$ IS LESS THAN OR EQUAL TO 1 WATT
C_I = .01μf	C_A IS GREATER THAN .01μf
L_I =10μH	L_A IS GREATER THAN 10μH

✳ FOR T1 OPTION:

Imax = 160mA	I_T OR I_{SC} IS LESS THAN OR EQUAL TO 160mA
L_I =1.05mH	L_A IS GREATER THAN 1.05mH

CLASS I, DIV. 1, GROUPS C AND D

V_{MAX} = 40V	V_T OR V_{OC} IS LESS THAN OR EQUAL TO 40V
I_{MAX} = 225mA	I_T OR I_{SC} IS LESS THAN OR EQUAL TO 225mA
P_{MAX} = 1 WATT	$(\frac{V_T \times I_T}{4})$ OR $(\frac{V_{OC} \times I_{SC}}{4})$ IS LESS THAN OR EQUAL TO 1 WATT
C_I = .01μf	C_A IS GREATER THAN .01μf
L_I =10μH	L_A IS GREATER THAN 10μH

✳ FOR T1 OPTION:

L_I =1.05mH	L_A IS GREATER THAN 1.05mH

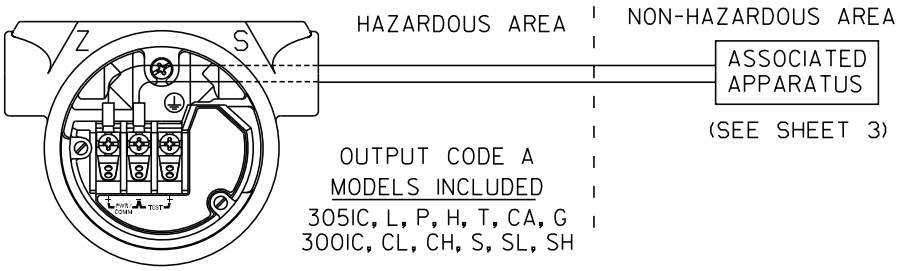

Rosemount Inc.
8200 Market Boulevard
Chanhassen, MN 55317 USA

CAD MAINTAINED (MicroStation)

DR. MIKE DOBE	SIZE A	FSCM NO	DWG NO. 03031-1019
ISSUED	SCALE N/A	WT. ———	SHEET 4 OF 13

Form Rev AC

REVISIONS				
REV	DESCRIPTION	CHG. NO.	APP'D	DATE
AG				

MODEL 3051G

FOR OUTPUT CODE A

CLASS I, DIV. 1, GROUPS A AND B

V_{MAX} = 30V	Vt or Voc IS LESS THAN OR EQUAL TO 30V
I_{MAX} = 165mA	It or Isc IS LESS THAN OR EQUAL TO 165mA
P_{MAX} = 1 WATT	(Voc X Isc/4) or (Vt X It/4) IS LESS THAN OR EQUAL TO 1 WATT
C_I = 0.01 μF	C_A IS GREATER THAN 0.01 μF + C_{CABLE}
L_I = 10 μH	L_A IS GREATER THAN 10 μH + L_{CABLE}

FOR T1 OPTION:

I_{MAX} = 160mA	It or Isc IS LESS THAN OR EQUAL TO 145mA
L_I = 1.06 mH	L_A IS GREATER THAN 1.06 mH + L_{CABLE}

CLASS I, DIV. 1, GROUPS C AND D

V_{MAX} = 30V	Vt or Voc IS LESS THAN OR EQUAL TO 30V
I_{MAX} = 225mA	It or Isc IS LESS THAN OR EQUAL TO 225mA
P_{MAX} = 1 WATT	(Voc X Isc/4) or (Vt X It/4) IS LESS THAN OR EQUAL TO 1 WATT
C_I = 0.01 μF	C_A IS GREATER THAN 0.01 μF + C_{CABLE}
L_I = 10 μH	L_A IS GREATER THAN 10 μH + L_{CABLE}

FOR T1 OPTION:

L_I = 1.06 mH	L_A IS GREATER THAN 1.06 mH + L_{CABLE}

Rosemount Inc.
8200 Market Boulevard
Chanhassen, MN 55317 USA

CAD MAINTAINED (MicroStation)

DR. Myles Lee Miller	SIZE A	FSCM NO	DWG NO. 03031-1019
ISSUED	SCALE N/A	WT. ———	SHEET 5 OF 13

Form Rev AC

REVISIONS				
REV	DESCRIPTION	CHG. NO.	APP'D	DATE
AG				

FOR OUTPUT CODE M

CLASS I, DIV. 1, GROUPS A AND B

V_{MAX} = 30V	V_T OR V_{OC} IS LESS THAN OR EQUAL TO 30V
I_{MAX} = 165mA	I_T OR I_{SC} IS LESS THAN OR EQUAL TO 165mA
P_{MAX} = 1 WATT	$(\frac{V_T \times I_T}{4})$ OR $(\frac{V_{OC} \times I_{SC}}{4})$ IS LESS THAN OR EQUAL TO 1 WATT
C_I = .042μf	C_A IS GREATER THAN .042μf
L_I =10μH	L_A IS GREATER THAN 10μH

* FOR T1 OPTION:

L_I =0.75mH	L_A IS GREATER THAN 0.75mH

CLASS I, DIV. 1, GROUPS C AND D

V_{MAX} = 30V	V_T OR V_{OC} IS LESS THAN OR EQUAL TO 30V
I_{MAX} = 225mA	I_T OR I_{SC} IS LESS THAN OR EQUAL TO 225mA
P_{MAX} = 1 WATT	$(\frac{V_T \times I_T}{4})$ OR $(\frac{V_{OC} \times I_{SC}}{4})$ IS LESS THAN OR EQUAL TO 1 WATT
C_I = .042μf	C_A IS GREATER THAN .042μf
L_I =10μH	L_A IS GREATER THAN 10μH

* FOR T1 OPTION:

L_I =0.75mH	L_A IS GREATER THAN 0.75mH

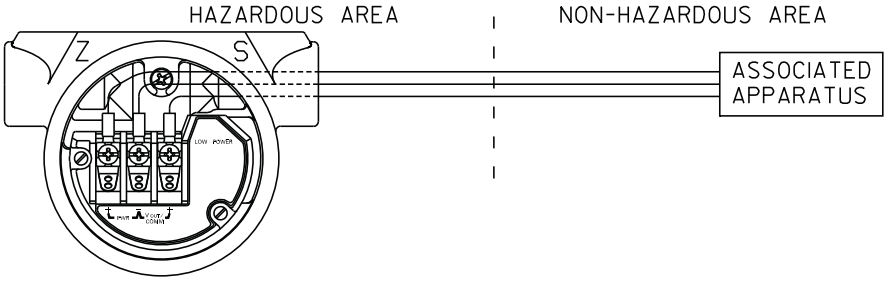

OUTPUT CODE M
AVAILABLE FOR THE MODELS LISTED

305IC 305IH
305IL 305ICA
305IP 305IT

Rosemount Inc.
8200 Market Boulevard
Chanhassen, MN 55317 USA

CAD MAINTAINED (MicroStation)

DR. MIKE DOBE	SIZE A	FSCM NO	DWG NO. 03031-1019
ISSUED	SCALE N/A	WT. ———	SHEET 6 OF 13

Form Rev AC

REVISIONS				
REV	DESCRIPTION	CHG. NO.	APP'D	DATE
AG				

CIRCUIT DIAGRAM 3
ONE DUAL CHANNEL BARRIER

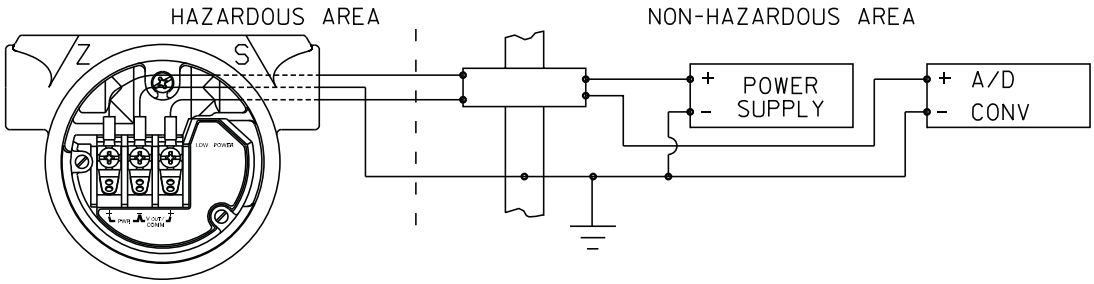

OUTPUT CODE M
AVAILABLE FOR THE MODELS LISTED

305IC	305IH
305IL	305ICA
305IP	305IT

CIRCUIT DIAGRAM 4
TWO SINGLE CHANNEL BARRIERS
(ONLY FOR USE WITH BARRIERS APPROVED
IN THIS CONFIGURATION)

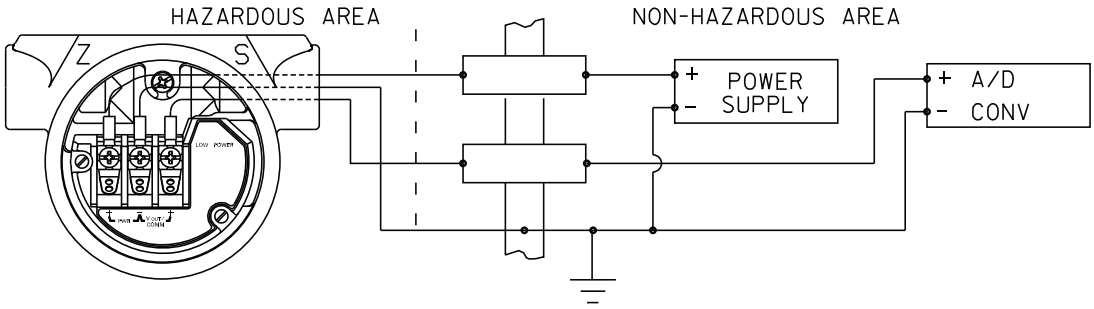

OUTPUT CODE M
AVAILABLE FOR THE MODELS LISTED

305IC	305IH
305IL	305ICA
305IP	305IT

Rosemount Inc.
8200 Market Boulevard
Chanhassen, MN 55317 USA

CAD MAINTAINED (MicroStation)

DR. SANDI MANSON	SIZE A	FSCM NO	DWG NO. 03031-1019
ISSUED	SCALE N/A	WT. ———	SHEET 7 OF 13

Form Rev AC

REVISIONS				
REV	DESCRIPTION	CHG. NO.	APP'D	DATE
AG				

3051 WITH FOUNDATION FIELDBUS OR PROFIBUS.
(OUTPUT CODE F OR W)

BARRIER PARAMETERS (APPLICABLE TO OUTPUT CODE F OR W)
Pmax = 1.3 WATT

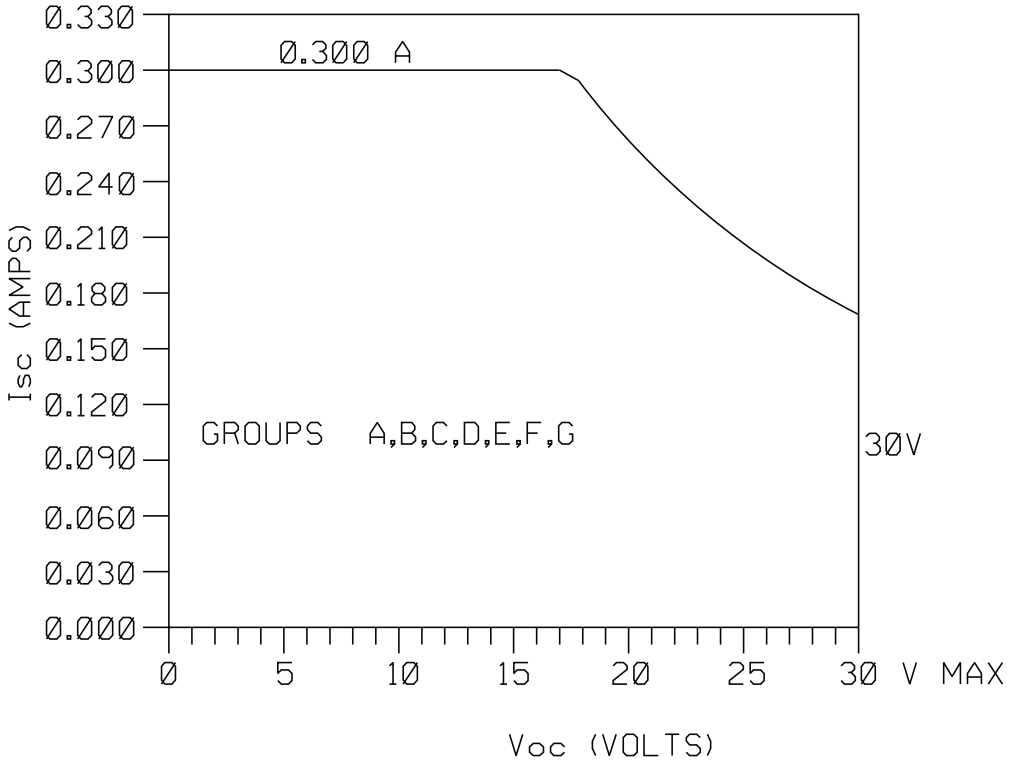

Rosemount Inc.
8200 Market Boulevard
Chanhassen, MN 55317 USA

CAD MAINTAINED (MicroStation)

DR. Myles Lee Miller	SIZE A	FSCM NO	DWG NO. 03031-1019
ISSUED	SCALE N/A	WT. ———	SHEET 8 OF 13

Form Rev AC

REVISIONS				
REV	DESCRIPTION	CHG. NO.	APP'D	DATE
AG				

CIRCUIT DIAGRAM 1
ONE BARRIER OR CONVERTER:
SINGLE OR DUAL CHANNEL

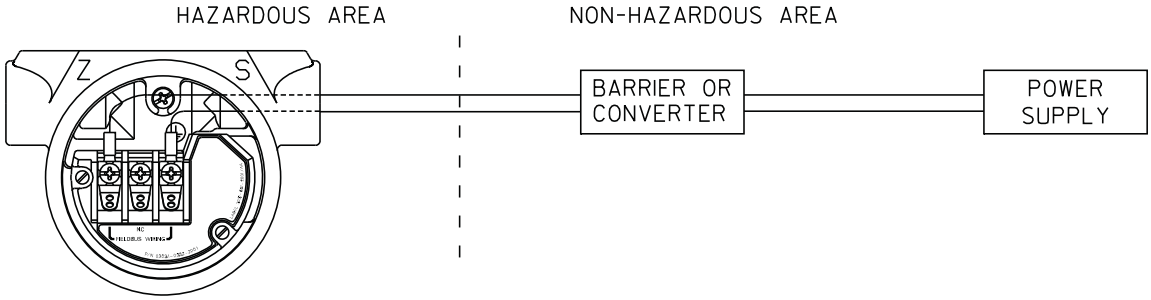

OUTPUT CODE F or W
MODELS INCLUDED
305IC, L, P, H, T, CA
300IC, CL, CH

CIRCUIT DIAGRAM 2
SUPPLY AND RETURN BARRIERS
(ONLY FOR USE WITH BARRIERS APPROVED IN THIS CONFIGURATION)

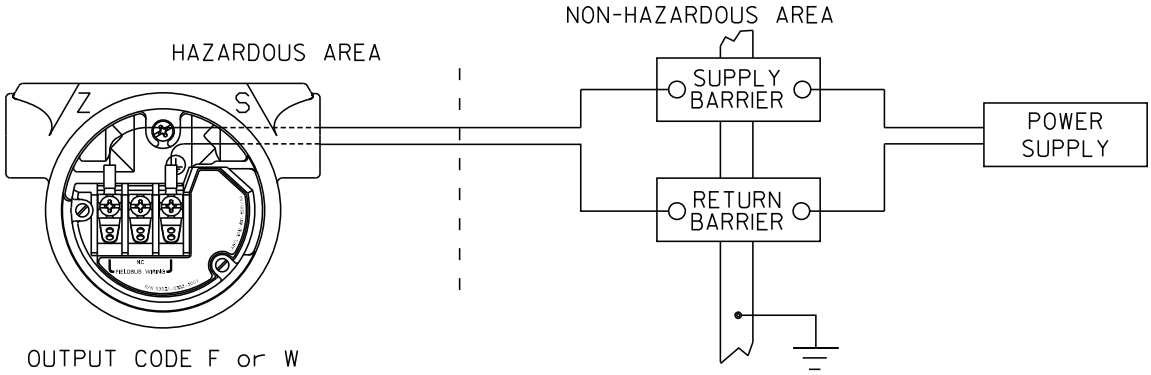

OUTPUT CODE F or W
MODELS INCLUDED
305IC, L, P, H, T, CA
300IC, CL, CH

Rosemount Inc.
8200 Market Boulevard
Chanhassen, MN 55317 USA

CAD MAINTAINED (MicroStation)

DR. Myles Lee Miller	SIZE A	FSCM NO	DWG NO. 03031-1019
ISSUED	SCALE N/A	WT. ———	SHEET 9 OF 13

Form Rev AC

REVISIONS				
REV	DESCRIPTION	CHG. NO.	APP'D	DATE
AG				

ENTITY CONCEPT APPROVALS

THE ENTITY CONCEPT ALLOWS INTERCONNECTION OF INTRINSICALLY SAFE APPARATUS TO ASSOCIATED APPARATUS NOT SPECIFICALLY EXAMINED IN COMBINATION AS A SYSTEM. THE APPROVED VALUES OF MAX. OPEN CIRCUIT VOLTAGE (Voc OR Vt) AND MAX. SHORT CIRCUIT CURRENT (Isc OR It) AND MAX. POWER (Voc X Isc/4) OR (Vt X It/4), FOR THE ASSOCIATED APPARATUS MUST BE LESS THAN OR EQUAL TO THE MAXIMUM SAFE INPUT VOLTAGE (Vmax), MAXIMUM SAFE INPUT CURRENT (Imax), AND MAXIMUM SAFE INPUT POWER (Pmax) OF THE INTRINSICALLY SAFE APPARATUS. IN ADDITION, THE APPROVED MAX. ALLOWABLE CONNECTED CAPACITANCE (Ca) OF THE ASSOCIATED APPARATUS MUST BE GREATER THAN THE SUM OF THE INTERCONNECTING CABLE CAPACITANCE AND THE UNPROTECTED INTERNAL CAPACITANCE (C_1) OF THE INTRINSICALLY SAFE APPARATUS, AND THE APPROVED MAX. ALLOWABLE CONNECTED INDUCTANCE (La) OF THE ASSOCIATED APPARATUS MUST BE GREATER THAN THE SUM OF THE INTERCONNECTING CABLE INDUCTANCE AND THE UNPROTECTED INTERNAL INDUCTANCE (L_1) OF THE INTRINSICALLY SAFE APPARATUS.

NOTE: ENTITY PARAMETERS LISTED APPLY ONLY TO ASSOCIATED APPARATUS WITH LINEAR OUTPUT.

FOR OUTPUT CODE F or W

CLASS I, DIV. 1, GROUPS A, B, C AND D

V_{MAX} = 30V	V_T OR V_{OC} IS LESS THAN OR EQUAL TO 30V
I_{MAX} = 300mA	I_T OR I_{SC} IS LESS THAN OR EQUAL TO 300mA
P_{MAX} = 1.3 WATT	$(\frac{V_T \times I_T}{4})$ OR $(\frac{V_{OC} \times I_{SC}}{4})$ IS LESS THAN OR EQUAL TO 1.3 WATT
C_I = 0μf	C_A IS GREATER THAN 0μf
L_I = 0μH	L_A IS GREATER THAN 0μH

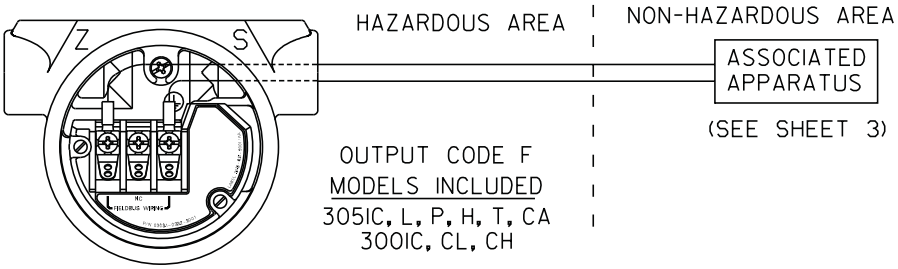

Rosemount Inc.
8200 Market Boulevard
Chanhassen, MN 55317 USA

CAD MAINTAINED (MicroStation)

DR. Myles Lee Miller	SIZE A	FSCM NO	DWG NO. 03031-1019
ISSUED	SCALE N/A	WT. ———	SHEET 10 OF 13

Form Rev AC

REVISIONS				
REV	DESCRIPTION	CHG. NO.	APP'D	DATE
AG				

FISCO CONCEPT APPROVALS

THE FISCO CONCEPT ALLOWS INTERCONNECTION OF INTRINSICALY SAFE APPARATUS TO ASSOCIATED APPARATUS NOT SPECIALLY EXAMINED IN SUCH COMBINATION. FOR THIS INTERCONNECTION TO BE VALID THE VOLTAGE (U_1 or Vmax), THE CURRENT (I_1 or Imax), AND THE POWER (P_1 or Pma) THAT INTRINSICALLY SAVE APPARATUS CAN RECEIVE AND REMAIN INTRINSICALY SAFE, INCLUDING FAULTS, MUST BE EQUAL OR GREATER THAN THE VOLTAGE (Uo, Voc, or Vt), THE CURRENT (Io, Isc, or It), AND THE POWER (Po or Pmax) LEVELS WHICH CAN BE DELIVERED BY THE ASSOCIATED APPARATUS, CONSIDERING FAULTS AND APPLICABLE FACTORS. ALSO, THE MAXIMUM UNPROTECTED CAPACITANCE (C_1) AND THE INDUCTANCE (L_1) OF EACH APPARATUS (BESIDES THE TERMINATION) CONNECTED TO THE FIELDBUS MUST BE LESS THAN OR EQUAL TO 5nF AND 10μH RESPECTVELY.
ONLY ONE ACTIVE DEVICE IN EACH SECTION (USUALLY THE ASSOCIATED APPARATUS) IS ALLOWED TO CONTRIBUTE THE DESIRED ENERGY FOR THE FIELDBUS SYSTEM. THE ASSOCIATED APPARATUS' VOLTAGE Uo (or Voc or Vt) IS LIMITED TO A RANGE OF 14V TO 24 V.D.C. ALL OTHER EQUIPENT COMBINED IN THE BUS CABLE MUST BE PASSIVE (THEY CANNOT PROVIDE ENERGY TO THE SYSTEM, EXCEPT A LEAKAGE CURRENT OF 50 μA FOR EACH CONNECTED DEVICE) SEPARATELY POWERED EQUIPMENT REQUIRES A GALVANIC ISOLATION TO AFFIRM THAT THE INTRINSICALLY SAFE FIELDBUS CIRCUIT WILL REMAIN PASSIVE. THE PARAMETER OF THE CABLE USED TO INTERCONNECT THE DEVICES MUST BE IN THE FOLLOWING RANGE:

LOOP RESISTANCE R': 15...150 OHM/km
INDUCTANCE PER UNIT LENGTH L': 0.4...1mH/KM
CAPACITANCE PER UNLIT LENGTH C': 80...200nF

C' = C' LINE/LINE +0.5C' LINE/SCREEN, IF BOTH LINES ARE FLOATING, OR
C' = C' LINE/LINE +C' LINE/SCREEN, IF THE SCREEN IS CONNECTED TO ONE LINE
TRUNK CABLE LENGTH: ≤ 1000 m
SPUR CABLE LENGTH: ≤ 30 m
SPLICE LENGTH: ≤ 1 m

AN APPROVED INFALLIBLE LINE TERMINATION TO EACH END OF THE TRUNK CABLE, WITH THE FOLLOWING PARAMETERS IS APPROPRIATE:

R = 90...100 OHMS C = 2.2μF

AN ALLOWED TERMINATION MIGHT ALREADY BE LINKED IN THE ASSOCIATED APPARATUS. DUE TO I.S. REASONS, THE NUMBER OF PASSIVE APPARATUS CONNECTED TO THE BUS SEGMENT IS NOT LIMITED. IF THE RULES ABOVE ARE FOLLOWED, UP TO A TOTAL LENGTH OF 1000 m (THE SUMMATION OF TRUNK AND ALL SPUR CABLES), THE INDUCTANCE AND THE CAPACITANCE OF THE CABLE WILL NOT DAMAGE THE INTRINSIC SAFETY OF THE SYSTEM.

NOTES:
INTRINSICALLY SAFE CLASS I, DIV. 1, GROUPS A, B, C, D

1. THE MAXIMUM NON-HAZARDOUS AREA VOLTAGE MUST NOT EXCEED 250 V.
2. CAUTION: ONLY USE SUPPLY WIRES SUITABLE FOR 5°C ABOVE SURROUNDING TEMPERATURE.
3. WARNING: REPLACEMENT OF COMPONENTS MAY DAMAGE INTRINSIC SAFETY.

Rosemount Inc.
8200 Market Boulevard
Chanhassen, MN 55317 USA

CAD MAINTAINED (MicroStation)

DR. Myles Lee Miller	SIZE A	FSCM NO	DWG NO. 03031-1019	
ISSUED	SCALE N/A	WT. ———		SHEET 11 OF 13

Form Rev AC

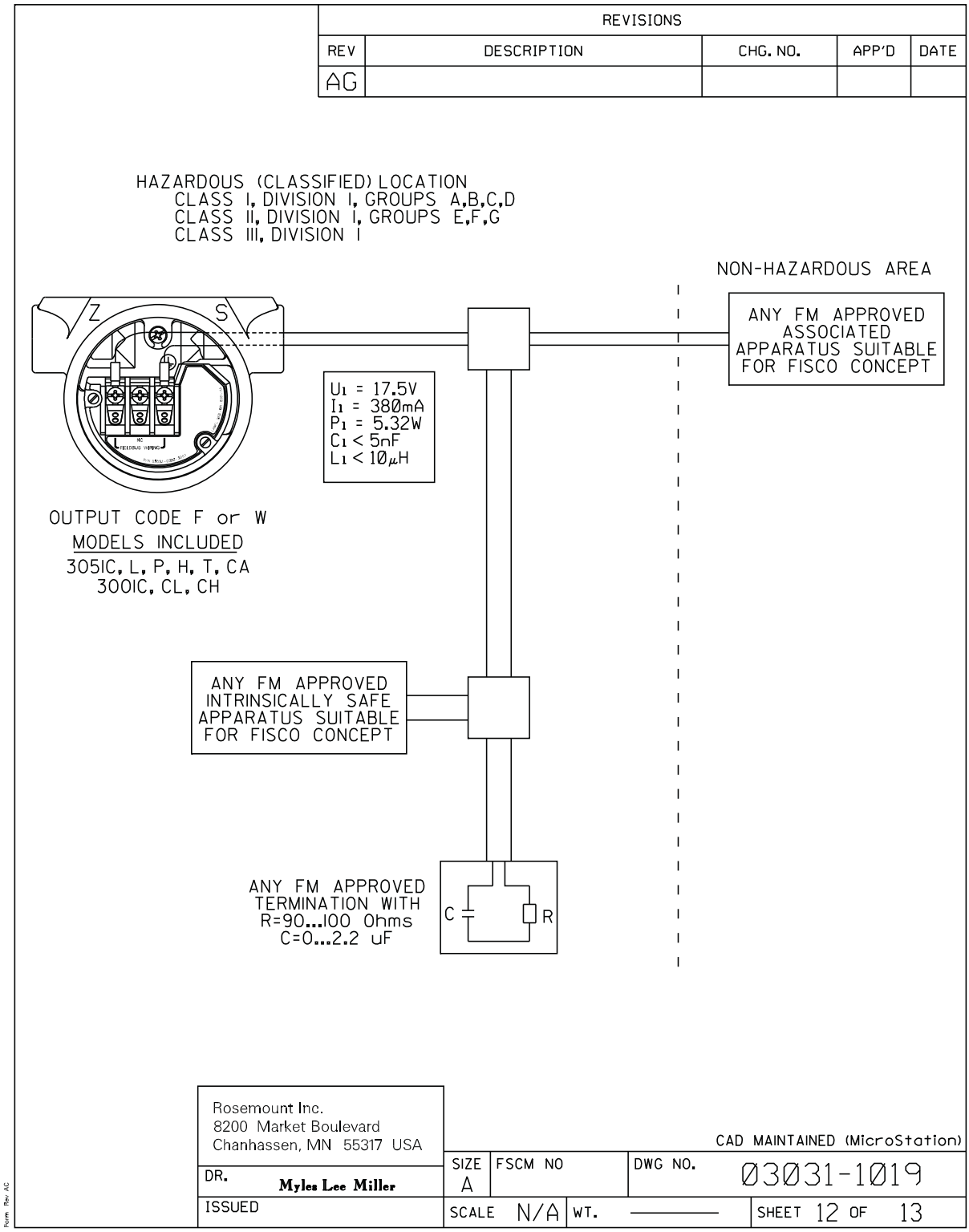
REVISIONS
REV
DESCRIPTION
CHG. NO.
APP'D
DATE
AG
HAZARDOUS (CLASSIFIED) LOCATION
CLASS I, DIVISION I, GROUPS A,B,C,D
CLASS II, DIVISION I, GROUPS E,F,G
CLASS III, DIVISION I
NON-HAZARDOUS AREA
ANY FM APPROVED ASSOCIATED APPARATUS SUITABLE FOR FISCO CONCEPT
U1 = 17.5V
I1 = 380mA
P1 = 5.32W
C1 < 5nF
L1 < 10μH
OUTPUT CODE F or W
MODELS INCLUDED
305IC, L, P, H, T, CA
300IC, CL, CH
ANY FM APPROVED INTRINSICALLY SAFE APPARATUS SUITABLE FOR FISCO CONCEPT
ANY FM APPROVED TERMINATION WITH R=90...100 Ohms C=0...2.2 uF
C
R
Rosemount Inc.
8200 Market Boulevard
Chanhassen, MN 55317 USA
CAD MAINTAINED (MicroStation)
DR.
Myles Lee Miller
SIZE
A
FSCM NO
DWG NO.
03031-1019
ISSUED
SCALE N/A
WT.
SHEET 12 OF 13

REVISIONS				
REV	DESCRIPTION	CHG. NO.	APP'D	DATE
AG				

NONINCENDIVE FIELD CIRCUIT
CLASS I, DIV. 2 LOCATIONS

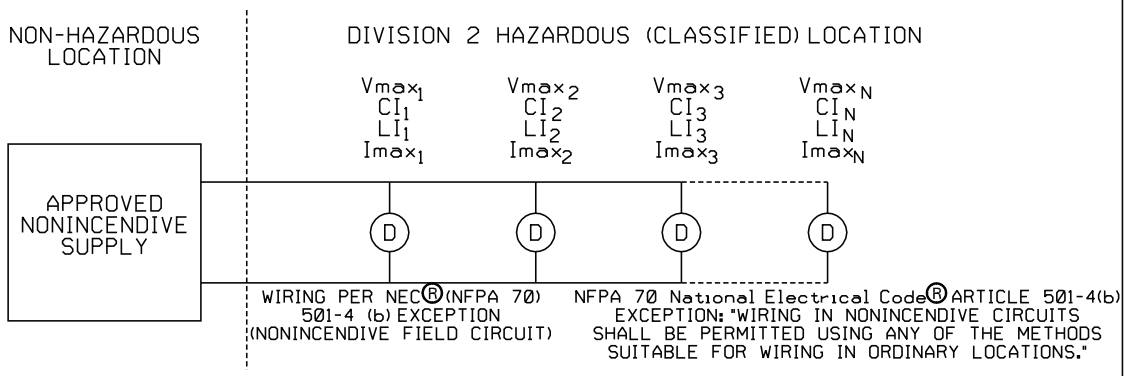

IN NORMAL OPERATION
DEVICES CONTROL THROUGH-CURRENT

PARAMETERS DEVICE

Voc <= Minimum of ($Vmax_1$, $Vmax_2$, ..., $Vmax_N$)

$Imax_1$ >= Iq_1 + $Isignal_1$

$Imax_2$ >= Iq_1 + $Isignal_2$

.

.

.

$Imax_N$ >= Iq_N + $Isignal_N$

Ca <= Ci_1 + Ci_2 +... + Ci_N + Ccable

La <= Li_1 + Li_2 +... + Li_N + Lcable

Imax for an individual device = Iq + Isignal

Iq =Quiescent current through device (Maximum quiescent current for the device)

Isignal =Signaling current through device (Protocol may limit signaling to one device at a time)

Operating Imax = Iq_1 + Iq_2 +...+ Iq_N + I_{signal} max

I_{signal} max = Max. of ($Isignal_1$, $Isignal_2$ ....., $Isignal_N$)

ROSEMOUNT 3051/3001

	4-20mA / HART	FIELDBUS (F or W)
Vmax	40v	30v
Maximum normal operating current	22mA	27mA
Ca	.010uF	0uF
La	10uH	0uH

ROSEMOUNT 3051 TRANSMITTERS ARE CURRENT CONTROLLERS ON INDIVIDUAL PARALLEL BRANCHES WITH RESPECT TO THE POWER SUPPLY. IN NONINCENDIVE INSTALLATIONS THE Imax FOR EACH TRANSMITTER IS NOT RELATED TO THE MAXIMUM CURRENT OF THE POWER SUPPLY (Isc) IN THE SAME MANNER AS FOR TRANSMITTER INSTALLED PER I.S. REQUIREMENTS, BECAUSE NONINCENDIVE REQUIREMENTS INCLUDE ONLY NORMAL OPERATING CONDITIONS.

REFERENCE: APPENDIX A7.3 (FM3611)

Rosemount Inc.
8200 Market Boulevard
Chanhassen, MN 55317 USA

CAD MAINTAINED (MicroStation)

DR. Jon Steffens	SIZE A	FSCM NO	DWG NO. 03031-1019
ISSUED	SCALE N/A	WT. ———	SHEET 13 OF 13

Form Rev AC

B.6.2 Canadian standards association (CSA) 03031-1024

CONFIDENTIAL AND PROPRIETARY INFORMATION IS CONTAINED HEREIN AND MUST BE HANDLED ACCORDINGLY

REVISIONS

REV	DESCRIPTION	CHG. NO.	APP'D	DATE
AA	ADD FIELDBUS	RTC1004232	M.L.M.	5/28/98
AB	ADD PROFIBUS, ENTITY PARAMETERS	RTC1008326	P.C.S.	2/4/00
AC	REM It, Vt FROM ENTITY PARAMETERS	RTC1009279	W.C.R.	7/11/00
AD	ADD FISCO FIELDBUS	RTC1012624	J.P.W.	4/4/02

APPROVALS FOR

3051C	3001C
3051L	3001CL
3051P	3001CH
3051H	3001S
3051CA	3001SL
3051T	3001SH

OUTPUT CODE A (4-20 mA HART) I.S. SEE SHEETS 2-3
OUTPUT CODE M (LOW POWER) I.S. SEE SHEETS 3-4
OUTPUT CODE F/W (FIELDBUS) I.S. SEE SHEETS 5-7
OUTPUT CODES A,F,W I.S. ENTITY PARAMETERS SHEET 8-9

TO ASSURE AN INTRINSICALLY SAFE SYSTEM, THE TRANSMITTER AND BARRIER MUST BE WIRED IN ACCORDANCE WITH THE BARRIER MANUFACTURER'S FIELD WIRING INSTRUCTIONS AND THE APPLICABLE CIRCUIT DIAGRAM.

WARNING - EXPLOSION HAZARD - SUBSTITUTION OF COMPONENTS MAY IMPAIR SUITABILITY FOR CLASS I, DIVISION 2.

AVERTISSEMENT - RISQUE D'EXPLOSION - LA SUBSTITUTION DE COMPOSANTS PEUT RENDRE CE MATERIEL INACCEPTABLE POUR LES EMPLACEMENTS DE CLASSE I, DIVISION 2.

CAD MAINTAINED (MicroStation)

UNLESS OTHERWISE SPECIFIED DIMENSIONS IN INCHES [mm]. REMOVE ALL BURRS AND SHARP EDGES. MACHINE SURFACE FINISH 125

-TOLERANCE-
.X ± .1 [2,5]
.XX ± .02 [0,5]
.XXX ± .010 [0,25]
FRACTIONS ± 1/32
ANGLES ± 2°

DO NOT SCALE PRINT

CONTRACT NO.
DR. Mike Debe 08/27/90
CHK'D
APP'D. GLEN MONZO 8/31/90
APP'D. GOVT.

EMERSON. Process Management
ROSEMOUNT®
8200 Market Boulevard • Chanhassen, MN 55317 USA

TITLE INDEX OF I.S. CSA FOR 3051C/L/P/H/T & 3001C/S

SIZE A | FSCM NO | DWG NO. 03031-1024
SCALE N/A | WT. ——— | SHEET 1 OF 9

REVISIONS				
REV	DESCRIPTION	CHG. NO.	APP'D	DATE
AD				

CSA INTRINSIC SAFETY APPROVALS
CIRCUIT CONNECTION WITH BARRIER OR CONVERTER
Ex ia
INTRINSICALLY SAFE/SECURITE INTRINSEQUE
4-20 mA, ("A" OUTPUT CODE)

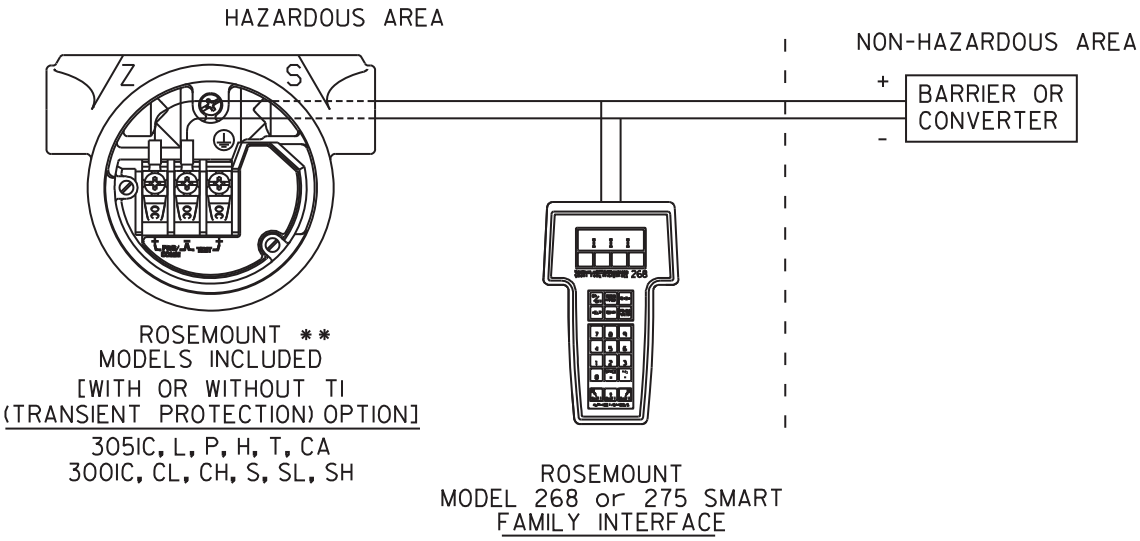

** FOR THE LOW POWER OPTION, SEE PAGE 4 FOR THE CIRCUIT CONNECTION WITH BARRIER OR CONVERTER. FOR FIELDBUS OPTIONS("F" or "W" OUTPUT CODE), SEE PAGE 5 FOR PARAMETERS AND CIRCIUT CONNECTION TO BARRIER.

Rosemount Inc. 8200 Market Boulevard Chanhassen, MN 55317 USA			CAD MAINTAINED (MicroStation)
DR. Mike Debe 08/27/90	SIZE A	FSCM NO	DWG NO. 03031-1024
ISSUED	SCALE N/A	WT. ———	SHEET 2 OF 9

REVISIONS				
REV	DESCRIPTION	CHG. NO.	APP'D	DATE
AD				

4-20 mA, ("A" OUTPUT CODE)

DEVICE	PARAMETERS	APPROVED FOR CLASS I, DIV.I
CSA APPROVED SAFETY BARRIER	30 V OR LESS * 330 OHMS OR MORE * 28 V OR LESS 300 OHMS OR MORE 25 V OR LESS 200 OHMS OR MORE * 22 V OR LESS 180 OHMS OR MORE	GROUPS A, B, C, D
FOXBORO CONVERTER 2AI-12V-CGB, 2AI-13V-CGB, 2AS-13I-CGB, 3A2-12D-CGB, 3A2-13D-CGB, 3AD-13I-CGB, 3A4-12D-CGB, 2AS-12I-CGB, 3F4-12DA		GROUPS B, C, D
CSA APPROVED SAFETY BARRIER	30 V OR LESS 150 OHMS OR MORE	GROUPS C, D

LOW POWER, ("M" OUTPUT CODE)

DEVICE	PARAMETERS	APPROVED FOR CLASS I, DIV.I
CSA APPROVED SAFETY BARRIER	Supply ≤ 28V, ≥ 300 Ω Return ≤ 10V, ≥ 47 Ω	GROUPS A, B, C, D
	Supply ≤ 30V, ≥ 150 Ω Return ≤ 10V, ≥ 47 Ω	GROUPS C, D

* MAY BE USED WITH ROSEMOUNT MODEL 268 or 275 SMART FAMILY INTERFACE.

Rosemount Inc. 8200 Market Boulevard Chanhassen, MN 55317 USA			CAD MAINTAINED (MicroStation)
DR. Mike Debe	SIZE A	FSCM NO	DWG NO. 03031-1024
ISSUED	SCALE N/A	WT. ———	SHEET 3 OF 9

REVISIONS				
REV	DESCRIPTION	CHG. NO.	APP'D	DATE
AD				

CSA INTRINSIC SAFETY APPROVALS

305IC LOW POWER CIRCUIT CONNECTION WITH INTRINSIC SAFETY BARRIERS

Ex ia

INTRINSICALLY SAFE/SECURITE INTRINSEQUE
LOWPOWER, ("M" OUTPUT CODE)

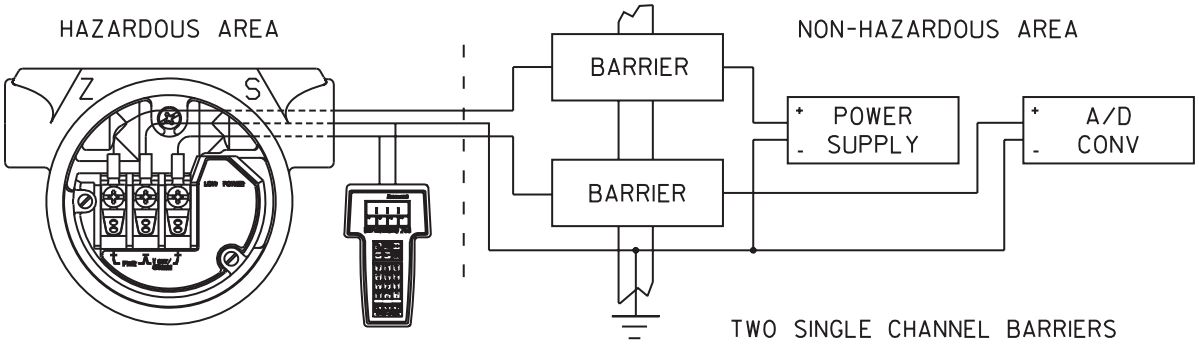

ROSEMOUNT MODEL 268 or 275

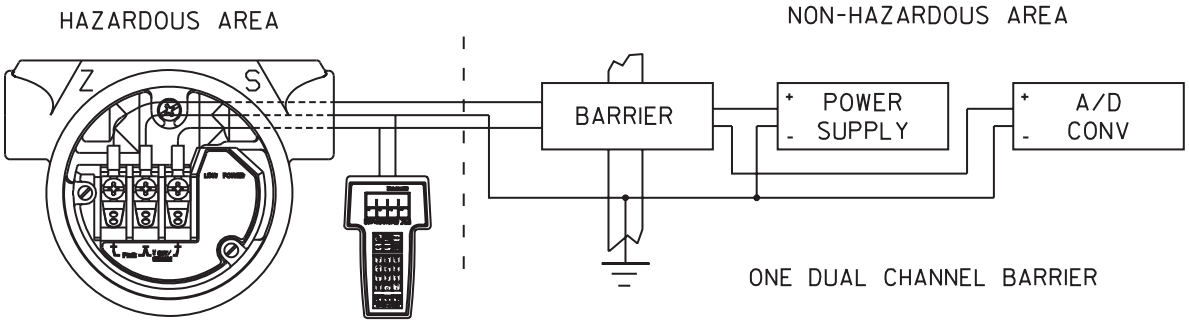

ROSEMOUNT MODEL 268 or 275

APPROVED FOR CLASS I, DIVISION I, GROUPS A,B,C,D WHEN USED IN CIRCUIT WITH TWO CSA APPROVED SINGLE CHANNEL SAFETY BARRIERS, ONE WITH APPROVED SAFETY PARAMETERS OF 28 VOLTS OR LESS AND 300 OHMS OR MORE IN +PWR LINE, AND ONE WITH APPROVED SAFETY PARAMETERS OF 10 VOLTS OR LESS AND 47 OHMS OR MORE IN Vout LINE, OR ONE CSA APPROVED DUAL CHANNEL SAFETY BARRIER WITH IDENTICAL APPROVED SAFETY PARAMETERS CONNECTED IN LIKE MANNER, AS ABOVE.

APPROVED FOR CLASS I, DIVISION I, GROUPS C,D WHEN USED IN CIRCUIT WITH TWO CSA APPROVED SINGLE CHANNEL SAFETY BARRIERS, ONE WITH APPROVED SAFETY PARAMETERS OF 30 VOLTS OR LESS AND 150 OHMS OR MORE IN +PWR LINE AND ONE WITH APPROVED SAFETY PARAMETERS OF 10 VOLTS OR LESS AND 47 OHMS OR MORE IN Vout LINE.

Rosemount Inc. 8200 Market Boulevard Chanhassen, MN 55317 USA			CAD MAINTAINED (MicroStation)	
DR. SANDI MANSON	SIZE A	FSCM NO	DWG NO. 03031-1024	
ISSUED	SCALE N/A	WT. ———	SHEET 4 OF 9	

REVISIONS				
REV	DESCRIPTION	CHG. NO.	APP'D	DATE
AD				

FIELDBUS, ("F" or "W" OUTPUT CODE)

DEVICE	PARAMETERS	APPROVED FOR CLASS I, DIV.I
CSA APPROVED SAFETY BARRIER	30 V OR LESS 300 OHMS OR MORE 28 V OR LESS 235 OHMS OR MORE 25 V OR LESS 160 OHMS OR MORE 22 V OR LESS 100 OHMS OR MORE	GROUPS A, B, C, D

CSA INTRINSIC SAFETY APPROVALS

CIRCUIT CONNECTION WITH BARRIER OR CONVERTER

Ex ia

INTRINSICALLY SAFE/SECURITE INTRINSEQUE
FIELDBUS, ("F" or "W" OUTPUT CODE)

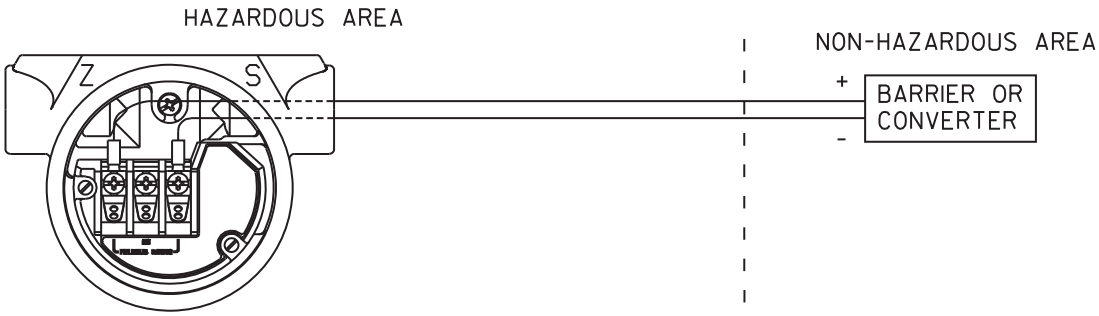

ROSEMOUNT **
MODELS INCLUDED
[WITH OR WITHOUT TI
(TRANSIENT PROTECTION) OPTION]
3051C, L, P, H, T, CA
3001C, CL, CH, S, SL, SH

WARNING - EXPLOSION HAZARD - SUBSTITUTION OF COMPONENTS MAY IMPAIR SUITABILITY FOR CLASS I, DIVISION 2.

AVERTISSEMENT - RISQUE D'EXPLOSION - LA SUBSTITUTION DE COMPOSANTS PEUT RENDRE CE MATERIEL INACCEPTABLE POUR LES EMPLACEMENTS DE CLASSE I, DIVISION 2.

Rosemount Inc. 8200 Market Boulevard Chanhassen, MN 55317 USA			CAD MAINTAINED (MicroStation)
DR. Myles Lee Miller	SIZE A	FSCM NO	DWG NO. 03031-1024
ISSUED	SCALE N/A	WT. ———	SHEET 5 OF 9

REVISIONS				
REV	DESCRIPTION	CHG. NO.	APP'D	DATE
AD				

FISCO CONCEPT APPROVALS

THE FISCO CONCEPT ALLOWS INTERCONNECTION OF INTRINSICALY SAFE APPARATUS TO ASSOCIATED APPARATUS NOT SPECIALLY EXAMINED IN SUCH COMBINATION. FOR THIS INTERCONNECTION TO BE VALID THE VOLTAGE (U_1 or Vmax), THE CURRENT (I_1 or Imax), AND THE POWER (P_1 or Pma) THAT INTRINSICALLY SAVE APPARATUS CAN RECEIVE AND REMAIN INTRINSICALY SAFE, INCLUDING FAULTS, MUST BE EQUAL OR GREATER THAN THE VOLTAGE (Uo, Voc, or Vt), THE CURRENT (Io, Isc, or It), AND THE POWER (Po or Pmax) LEVELS WHICH CAN BE DELIVERED BY THE ASSOCIATED APPARATUS, CONSIDERING FAULTS AND APPLICABLE FACTORS. ALSO, THE MAXIMUM UNPROTECTED CAPACITANCE (C_1) AND THE INDUCTANCE (L_1) OF EACH APPARATUS (BESIDES THE TERMINATION) CONNECTED TO THE FIELDBUS MUST BE LESS THAN OR EQUAL TO 5nF AND 10μH RESPECTVELY.
ONLY ONE ACTIVE DEVICE IN EACH SECTION (USUALLY THE ASSOCIATED APPARATUS) IS ALLOWED TO CONTRIBUTE THE DESIRED ENERGY FOR THE FIELDBUS SYSTEM. THE ASSOCIATED APPARATUS' VOLTAGE Uo (or Voc or Vt) IS LIMITED TO A RANGE OF 14V TO 24 V.D.C. ALL OTHER EQUIPENT COMBINED IN THE BUS CABLE MUST BE PASSIVE (THEY CANNOT PROVIDE ENERGY TO THE SYSTEM, EXCEPT A LEAKAGE CURRENT OF 50 μA FOR EACH CONNECTED DEVICE) SEPARATELY POWERED EQUIPMENT REQUIRES A GALVANIC ISOLATION TO AFFIRM THAT THE INTRINSICALLY SAFE FIELDBUS CIRCUIT WILL REMAIN PASSIVE. THE PARAMETER OF THE CABLE USED TO INTERCONNECT THE DEVICES MUST BE IN THE FOLLOWING RANGE:

LOOP RESISTANCE R': 15...150 OHM/km
INDUCTANCE PER UNIT LENGTH L': 0.4...1mH/KM
CAPACITANCE PER UNLIT LENGTH C': 80...200nF

C' = C' LINE/LINE +0.5C' LINE/SCREEN, IF BOTH LINES ARE FLOATING, OR
C' = C' LINE/LINE +C' LINE/SCREEN, IF THE SCREEN IS CONNECTED TO ONE LINE
TRUNK CABLE LENGTH: ≤ 1000 m
SPUR CABLE LENGTH: ≤ 30 m
SPLICE LENGTH: ≤ 1 m

AN APPROVED INFALLIBLE LINE TERMINATION TO EACH END OF THE TRUNK CABLE, WITH THE FOLLOWING PARAMETERS IS APPROPRIATE:

R = 90...100 OHMS C = 2.2μF

AN ALLOWED TERMINATION MIGHT ALREADY BE LINKED IN THE ASSOCIATED APPARATUS. DUE TO I.S. REASONS, THE NUMBER OF PASSIVE APPARATUS CONNECTED TO THE BUS SEGMENT IS NOT LIMITED. IF THE RULES ABOVE ARE FOLLOWED, UP TO A TOTAL LENGTH OF 1000 m (THE SUMMATION OF TRUNK AND ALL SPUR CABLES), THE INDUCTANCE AND THE CAPACITANCE OF THE CABLE WILL NOT DAMAGE THE INTRINSIC SAFETY OF THE SYSTEM.

NOTES:
INTRINSICALLY SAFE CLASS I, DIV. 1, GROUPS A, B, C, D

1. THE MAXIMUM NON-HAZARDOUS AREA VOLTAGE MUST NOT EXCEED 250 V.
2. CAUTION: ONLY USE SUPPLY WIRES SUITABLE FOR 5°C ABOVE SURROUNDING TEMPERATURE.
3. WARNING: REPLACEMENT OF COMPONENTS MAY DAMAGE INTRINSIC SAFETY.

Rosemount Inc.
8200 Market Boulevard
Chanhassen, MN 55317 USA

CAD MAINTAINED (MicroStation)

DR. Myles Lee Miller	SIZE A	FSCM NO	DWG NO. 03031-1024	
ISSUED	SCALE N/A	WT. ———		SHEET 6 OF 9

REVISIONS				
REV	DESCRIPTION	CHG. NO.	APP'D	DATE
AD				

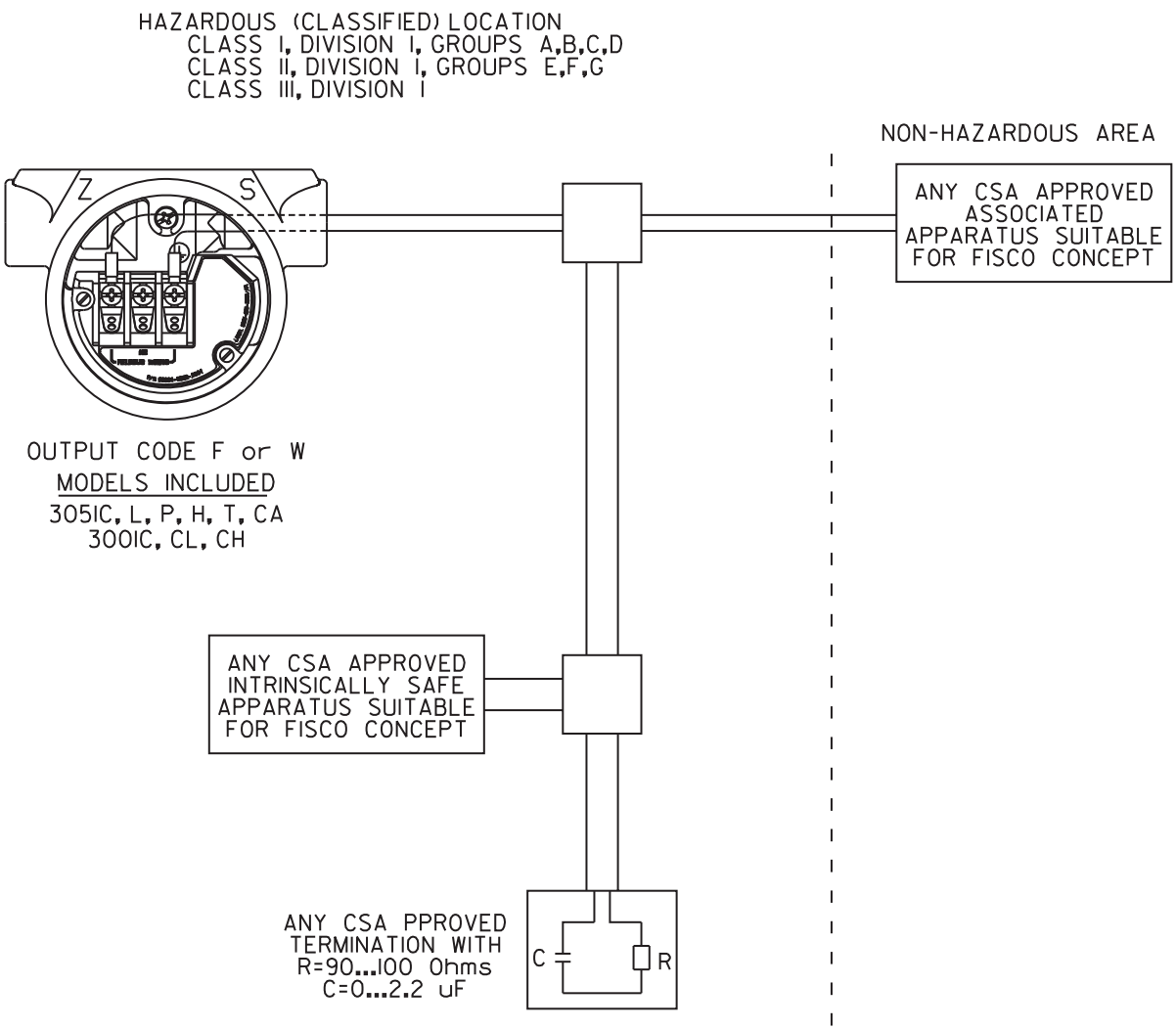

Rosemount Inc. 8200 Market Boulevard Chanhassen, MN 55317 USA			CAD MAINTAINED (MicroStation)	
DR. Myles Lee Miller	SIZE A	FSCM NO	DWG NO. 03031-1024	
ISSUED	SCALE N/A	WT. ———	SHEET 7 OF 9	

REVISIONS				
REV	DESCRIPTION	CHG. NO.	APP'D	DATE
AD				

3051 I.S. ENTITY PARAMETERS. (OUTPUT CODE A,F, or W)

BARRIER PARAMETERS (APPLICABLE TO OUTPUT CODE A,F, or W)

Pmax = 1.3 WATT OUTPUT F or W
Pmax = 1.0 WATT OUTPUT A

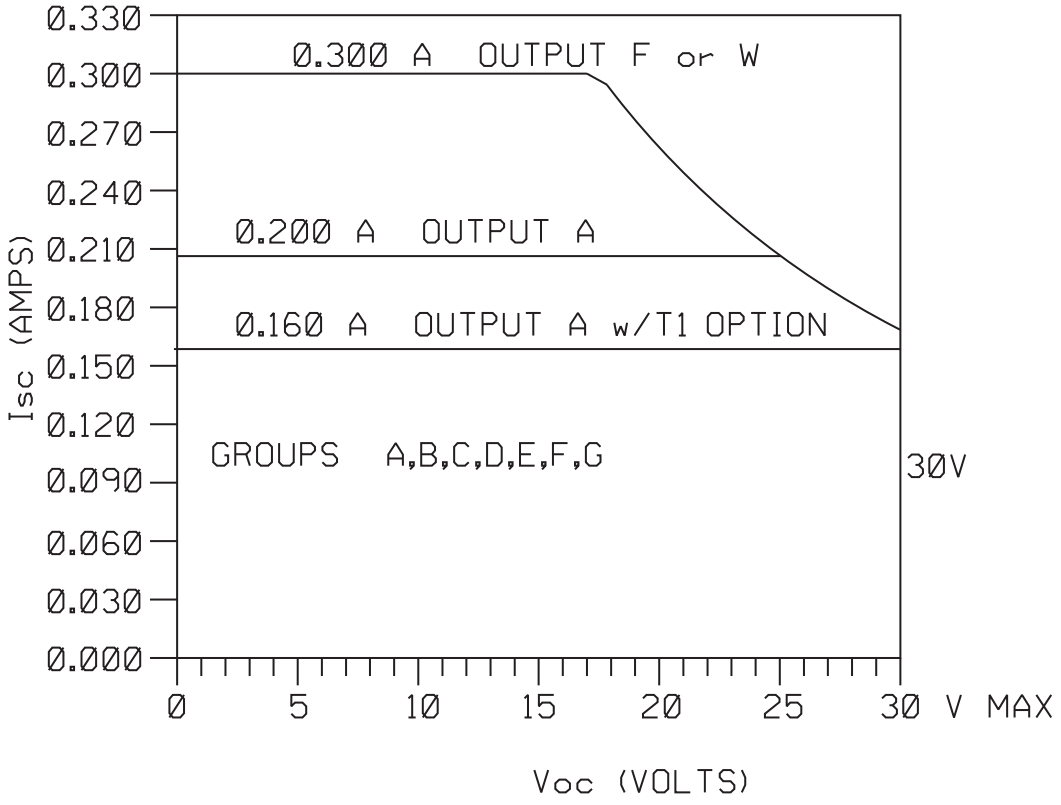

Rosemount Inc. 8200 Market Boulevard Chanhassen, MN 55317 USA			CAD MAINTAINED (MicroStation)	
DR. JON STEFFENS	SIZE A	FSCM NO	DWG NO. 03031-1024	
ISSUED	SCALE N/A	WT. ———	SHEET 8 OF 9	

Form Rev A6

REVISIONS				
REV	DESCRIPTION	CHG. NO.	APP'D	DATE
AD				

ENTITY CONCEPT APPROVALS

THE ENTITY CONCEPT ALLOWS INTERCONNECTION OF INTRINSICALLY SAFE APPARATUS TO ASSOCIATED APPARATUS NOT SPECIFICALLY EXAMINED IN COMBINATION AS A SYSTEM. THE APPROVED VALUES OF MAX. OPEN CIRCUIT VOLTAGE (Voc) AND MAX. SHORT CIRCUIT CURRENT (Isc) AND MAX. POWER (Voc X Isc/4), FOR THE ASSOCIATED APPARATUS MUST BE LESS THAN OR EQUAL TO THE MAXIMUM SAFE INPUT VOLTAGE (Vmax), MAXIMUM SAFE INPUT CURRENT (Imax), AND MAXIMUM SAFE INPUT POWER (Pmax) OF THE INTRINSICALLY SAFE APPARATUS. IN ADDITION, THE APPROVED MAX. ALLOWABLE CONNECTED CAPACITANCE (Ca) OF THE ASSOCIATED APPARATUS MUST BE GREATER THAN THE SUM OF THE INTERCONNECTING CABLE CAPACITANCE AND THE UNPROTECTED INTERNAL CAPACITANCE (C_I) OF THE INTRINSICALLY SAFE APPARATUS, AND THE APPROVED MAX. ALLOWABLE CONNECTED INDUCTANCE (La) OF THE ASSOCIATED APPARATUS MUST BE GREATER THAN THE SUM OF THE INTERCONNECTING CABLE INDUCTANCE AND THE UNPROTECTED INTERNAL INDUCTANCE (L_I) OF THE INTRINSICALLY SAFE APPARATUS.

FOR OUTPUT CODE A

CLASS I, DIV. 1, GROUPS A, B, C AND D

V_{MAX} = 30V	V_{OC} IS LESS THAN OR EQUAL TO 30V
I_{MAX} = 200mA	I_{SC} IS LESS THAN OR EQUAL TO 200mA
P_{MAX} = 1 WATT	$(\frac{V_{OC} \times I_{SC}}{4})$ IS LESS THAN OR EQUAL TO 1 WATT
C_I = .01μf	C_A IS GREATER THAN .01μf + C CABLE
L_I =10μH	L_A IS GREATER THAN 10μH + L CABLE

* FOR T1 OPTION:

Imax = 160mA	I_{SC} IS LESS THAN OR EQUAL TO 160mA
L_I =1.05mH	L_A IS GREATER THAN 1.05mH + L CABLE

FOR OUTPUT CODE F or W

CLASS I, DIV. 1, GROUPS A, B, C AND D

V_{MAX} = 30V	V_{OC} IS LESS THAN OR EQUAL TO 30V
I_{MAX} = 300mA	I_{SC} IS LESS THAN OR EQUAL TO 300mA
P_{MAX} = 1.3 WATT	$(\frac{V_{OC} \times I_{SC}}{4})$ IS LESS THAN OR EQUAL TO 1.3 WATT
C_I = 0μf	C_A IS GREATER THAN 0μf + C CABLE
L_I = 0μH	L_A IS GREATER THAN 0μH + L CABLE

NOTE: ENTITY PARAMETERS LISTED APPLY ONLY TO ASSOCIATED APPARATUS WITH LINEAR OUTPUT.

Rosemount Inc. 8200 Market Boulevard Chanhassen, MN 55317 USA			CAD MAINTAINED (MicroStation)	
DR. JON STEFFENS	SIZE A	FSCM NO	DWG NO. 03031-1024	
ISSUED	SCALE N/A	WT. ———		SHEET 9 OF 9

Index

A
Address
  Changing . . . 69
Alarm . . . 62
  Burst mode values . . . 62
  Configuration procedure . . . 20
  Failure mode . . . 61
  Level verification . . . 62
  Multidrop mode values . . . 62
Analog output trim . . . 77
Approval
  Drawings
    Canadian Standards Association . . . 197
    Factory Mutual . . . 184
  Information . . . 175
Approval drawings . . . 184

B
Basic setup . . . 52
Bench hook-up . . . 41
Block diagram . . . 4
Board, electronics . . . 21
Bolts
  Installation . . . 11, 13
  Material . . . 13
Brackets
  Mounting . . . 10
Bubbler Liquid Level Measurement . . . 38
Bubbler System in Open Vessel . . . 36
  Liquid Level Measurement . . . 36
Burst mode
  Advanced functions . . . 67
  Alarm and saturation values . . . 62

C
Calibration . . . 72
  Choosing a procedure . . . 76
  Frequency, determining . . . 74
  Full trim . . . 83
  Recal factory trim
    Analog output . . . 80
    Sensor trim . . . 84
  Sensor trim . . . 81
  Tasks . . . 74
  Zero trim . . . 82
Certifications . . . 175
Cloning . . . 64
Closed Vessels
  Dry Leg Condition . . . 36
  Liquid Level Measurement . . . 35
  Wet Leg Condition . . . 36
Communicator . . . 94
Compensating line pressure . . . 85
Configuration . . . 39
  Applying a user configuration . . . 66
  Cloning . . . 64
  Data review . . . 42
  LCD display
    Custom . . . 59
  LCD meter . . . 58
  Recalling . . . 64
  Reusable copy . . . 66
  Saving . . . 64
Considerations
  Compatibility . . . 7
  Draft range . . . 7
  Environmental . . . 8
  General . . . 6
  Mechanical . . . 7
Curr Fixed . . . 93
Curr Saturd . . . 93
Custom configuration
  LCD display . . . 59

D
Damping . . . 7, 57
Detailed setup . . . 61, 62
Diagnostics
  Messages . . . 93
    Curr Fixed . . . 93
    Curr Saturd . . . 93
    Error . . . 92
    Fail . . . 92
    Fail Config . . . 92
    Fail Elect . . . 92
    Fail Module . . . 92
    HART Communicator . . . 94
    Local Dsbld . . . 94
    Loop test . . . 93
    Operation . . . 93
    Press Limit . . . 93
    Span Fail . . . 94
    Span Pass . . . 93
    Temp Limit . . . 93
    Warnings . . . 92
    Write protect . . . 94
    Zero Fail . . . 93
    Zero Pass . . . 93
Diagnostics and service . . . 62
  Loop
    Test . . . 62

Diagrams
- Bench hook-up . . . 41
- Low power . . . 41
- Multidrop network . . . 68
- Typical multidrop network . . . 68

Digital to analog trim . . . 77
- Other scale . . . 79

Disassembly
- Before disassembling . . . 97
- Remove electronics board . . . 99
- Remove from service . . . 98
- Sensor module . . . 99

Disassembly procedures . . . 97
Draft Range . . . 7
Draft range . . . 7
- Damping . . . 7
- Installation . . . 7
- Process noise . . . 7
- Side filtering . . . 7

Drawings
- Approval . . . 184
  - Canadian Standards Association . . . 197
  - Factory Mutual . . . 184

Dry Leg Condition
- Liquid Level Measurement . . . 36

E

Electrical Installation Considerations
- Grounding . . . 23
- Signal and Test Terminals . . . 23
- Wiring . . . 23

Electronics board . . . 21
- Low power . . . 21

Environmental Considerations . . . 29
Environmental considerations . . . 8
Error . . . 92

F

Fail . . . 92
- Config . . . 92
- Elect . . . 92
- Module . . . 92

Failure mode
- Alarm values . . . 61
- Saturation values . . . 61

Features . . . 2
Filtering
- Draft range . . . 7

Foundation fieldbus . . . 3
Full trim . . . 83

G

Grounding . . . 23
- Transmitter Case . . . 28

H

HART Communicator
- Diagnostics . . . 94

Hazardous Locations . . . 31
Housing
- Remove . . . 99

I

Impulse piping . . . 14
Installation . . . 5, 10
- Bolts . . . 11, 13
- Cover . . . 10
- Draft range . . . 7
- Environmental Considerations . . . 29
- Examples . . . 16
- HART flowchart . . . 9
- Hazardous Locations . . . 31
- Housing rotation . . . 18
- Mechanical considerations . . . 7
- Model 305 manifold . . . 31
- Model 306 manifold . . . 31
- Mounting . . . 10
  - Brackets . . . 10
- Process Flange Orientation . . . 10
- Signal Wiring Grounding . . . 28

Introduction . . . 1

J

Jumper
- Alarm . . . 20
- Security . . . 20

L

LCD display
- Custom configuration . . . 59

LCD meter . . . 58
- Configuration . . . 58
- Options . . . 59

Lightning . . . 26
Line pressure
- Compensating . . . 85

Liquid Level Measurement
- Bubbler System in Open Vessel . . . 36
- Closed Vessels . . . 35
- Dry Leg Condition . . . 36
- Open Vessels . . . 35
- Wet Leg Condition . . . 36

Local Dsbld . . . 94
Loop
- Setting to manual . . . 40
- Test . . . 93

Loop test . . . 62

Low power
Diagrams 41
Electronics board 21
Menu tree 45

M

Maintenance 71
Manifold installations 31
Manual
Models covered 2
Use of 1
Mechanical considerations 7
Menu tree
Low power 45
Meter, LCD display 59
Model 275 HART Communicator 45
Mounting
Installation 10
Requirements 15
Multidrop communication 62
Advanced functions 68
Communicating 69
Diagram 68

N

NAMUR-compliant values 61
Noise
Draft range 7

O

Open Vessels
Liquid Level Measurement 35
Operation 71, 93
Block diagram 4
Options
LCD meter 59
Ordering Information
Model 3051C 131
Output
Process variables 50
Recal factory trim 80
Sensor temperature 50
Transfer function 52

P

Parts list 164
Piping, impulse 14
Press Limit 93
Process
Connections 16
Process variables 50
Units 52
Product certifications 175

R

Reassembly
Attaching sensor module 100
Installing terminal block 101
Process sensor body 101
Recall factory trim
Analog output 80
Sensor trim 84
Recalling 64
Rerange 53
AMS only 57
HART Communicator only 55
Pressure input source
With HART Communicator 55
With local zero and span 56
Returning products and materials 102
Reusable copy 66

S

Saturation
Burst mode values 62
Failure mode 61
Multidrop mode values 62
Saving a configuration 64
Security 20
Sensor
Module
Installing 100
Removing 99
Sensor Temperature 51
Sensor temperature 50
Sensor trim 81
Service and Diagnostics 62
Service Support 1
Setup
Basic 52
Detailed 61, 62
Signal Wiring Grounding 28
Software
Lock out 20
Span
Button 20
Fail 94
Pass 93
Spare parts list 164
Support 1

T

Temp limit 93
Terminal block
Installing 101
Terminal Side 10
Transfer function 52
Transmitter Case 28

Trim
- Analog output 77
- Digital to Analog 77
  - Other scale. 79
- Full 83
- Recall factory
  - Analog output 80
  - Sensor trim 84
- Sensor 81
- Zero 82

Troubleshooting
- Reference table 91

U

Units,Process variable. 52

V

Vessels
- Open/Closed 35

W

Warnings. 92

Wet Leg Condition
- Example (Figure 4-6) 37
- Liquid Level Measurement 36

Wiring 23
- Diagrams
  - Bench hook-up 41
  - Low power 41
- Signal Terminals 23
- Test Terminals. 23

Write protect 20, 94

X

Xmtr Info. 93

Z

Zero
- Button 20
- Fail 93
- Pass 93

Zero trim. 82

Standard Terms and Conditions of Sale can be found at www.rosemount.com/terms_of_sale
The Emerson logo is a trademark and service mark of Emerson Electric Co.
Rosemount. the Rosemount logotype, and SMART FAMILY are registered trademarks of Rosemount Inc.
Coplanar is a trademark of Rosemount Inc.
Halocarbon is a trademark of the Halocarbon Products Corporation.o.
Fluorinert is a registered trademark of Minnesota Mining and Manufacturing Company Corporation
Syltherm 800 and D.C. 200 are registered trademarks of Dow Corning Corporation.
Neobee M-20 is a registered trademark of PVO International, Inc.
HART is a registered trademark of the HART Communication Foundation.
Foundation fieldbus is a registered trademark of the Fieldbus Foundation.
All other marks are the property of their respective owners.

© November 2012 Rosemount, Inc. All rights reserved.

Emerson Process Management
Rosemount Measurement
8200 Market Boulevard
Chanhassen MN 55317 USA
Tel (USA) 1 800 999 9307
Tel (International) +1 952 906 8888
Fax +1 952 906 8889

Emerson Process Management
GmbH & Co.
Argelsrieder Feld 3
82234 Wessling
Germany
Tel 49 (8153) 9390
Fax 49 (8153) 939172

Emerson Process Management Asia
Pacific Private Limited
1 Pandan Crescent
Singapore 128461
T (65) 6777 8211
F (65) 6777 0947
Enquiries@AP.EmersonProcess.com

Beijing Rosemount Far East
Instrument Co., Limited
No. 6 North Street,
Hepingli, Dong Cheng District
Beijing 100013, China
T (86) (10) 6428 2233
F (86) (10) 6422 8586

ROSEMOUNT

00809-0100-4001 Rev JA, 11/12

EMERSON.
Process Management

True level control for general industry

With the reliability of Sonic Intelligence echo processing

MULTI-RANGER 100

MultiRanger

Answers for industry.

SIEMENS

Signal processing with field experience

Siemens MultiRanger 100/200 are high performance ultrasonic level controllers that offer reliable and consistent performance. MultiRanger uses non-contacting ultrasonic technology to provide continuous level measurement for any short- to medium-range application up to 15 m (50 ft). MultiRanger can measure a wide range of materials including fuel oil, municipal waste, acids, woodchips, and solids with high angles of repose. This cost-effective controller is available in two versions: MultiRanger 100 is for simple level measurement or pump control and MultiRanger 200 has more advanced features such as differential level, open channel measurement and advanced pump control and alarming. Both versions are available in wall or panel mount.

- Simple setup and programming with handheld infrared programmer or via SIMATIC PDM
- Sonic Intelligence – our field proven echo processing algorithms guarantee the most reliable performance available
- Unmatched beam angle – stronger pulse and sensitivity in a compact beam make our ultrasonics transducers the most reliable in the industry
- Million in one – our products have the field experience of over a million points of level built into every device
- Global network – sales and support in your neighborhood. Our extensive global coverage means you get sales and support when and where you need it.

MultiRanger 100/200	
Power	
	• AC version: 100 to 230 V AC ±15%, 50/60 Hz, 36 VA/17 W • DC version: 12 to 30 V DC, 20 W
Performance	
Measurement points	Single or dual point
Measurement range	0.3 to 15 m (1 to 50 ft), dependent on transducer
Accuracy	0.25% of program range* or 6 mm (0.24"), whichever is greater
Resolution	0.1% of program range* or 2 mm (0.08"), whichever is greater
Interface	
Display	100 x 40 mm (4 x 1.5") multi-field backlit LCD
Communication	• Built-in Modbus® RTU or ASCII via RS-485 or RS-232 Options: • PROFIBUS DP • Allen-Bradley® Remote I/O • DeviceNet™
Programming	• Patented infrared handheld programmer • SIMATIC PDM
Outputs	• Two 0/4 to 20 mA outputs • All relays rated 5A at 250 V AC, non-inductive Options: • One relay (Form A) (MultiRanger 100) • Three relays (two Form A / one Form C) or • Six relays (four Form A / two Form C)
Inputs	• 2 discrete inputs for contact level device • mA input (MultiRanger 200 only)
Mechanical	
Enclosure	• Wall mount: Type 4X/NEMA 4X/IP65, polycarbonate • Panel mount: Type 3/NEMA 3/IP54, polycarbonate
Process conditions	
Ambient temperature	-20 to 50 °C (-5 to 122 °F)
Compatible transducers	
	XRS-5, XCT-8, XCT-12, XPS-10, XPS-15, ST-H
Approvals	
	CE, $CSA_{NRTL/C}$, UL Listed, FM

* Program range is defined as the empty distance to the face of the transducer plus any range extension.

Allen-Bradley is a registered trademark of Rockwell Automation. DeviceNet is a trademark of Open DeviceNet Vendor Association. Modbus is a registered trademark of Schneider Electric. MultiRanger and Sonic Intelligence are registered trademarks of Siemens Milltronics Process Instruments Inc. SIMATIC PDM is a registered trademark of Siemens AG. Specifications are subject to change without notice.
© Siemens Milltronics Process Instruments Inc. 2008.

© Siemens AG 2012

Overview

Echomax XPS/XCT transducers use ultrasonic technology to measure level in a wide range of liquids and solids.

Benefits

- Integral temperature compensation
- Low ringing effect reduces blanking distance
- Optional foam facing for dusty applications
- Self-cleaning and low-maintenance
- Chemically resistant
- Hermetically sealed

Application

The transducers can be fully immersed, are resistant to steam and corrosive chemicals, and can be installed without flanges.

The XPS series offers versions for various measuring ranges up to 40 m (130 ft) and up to a max. temperature of 95 °C (203 °F).

The XCT series can be used in applications at higher temperatures to measure level up to a distance of 12 m (40 ft) and at a max. temperature of 95 °C (203 °F).

During operation, the Echomax transducers emit acoustic pulses in a narrow beam. The level monitor measures the propagation time between pulse emission and its reflection (echo) to calculate the distance.

XPS-10F

© Siemens AG 2012

Technical specifications

Input	XPS-10 (standard and F models)	XPS-15 (standard and F models)	XPS-30	XPS-40	XCT-8 (standard and sanitary models)	XCT-12
Measuring range	0.3 ... 10 m (1 ... 33 ft)	Standard: 0.3 ... 15 m (1 ... 50 ft) Flanged: 0.45 ... 15 m (1.5 ... 50 ft)	0.6 ... 30 m (2 ... 100 ft)	0.9 ... 40 m (3 ... 130 ft)	0.6 ... 8 m (2 ... 26 ft)	0.6 ... 12 m (2 ... 40 ft)
Output						
Frequency	44 kHz	44 kHz	30 kHz	22 kHz	44 kHz	44 kHz
Beam angle	12°	6°	6°	6°	12°	6°
Environmental						
Location	Indoors/outdoors					
Ambient temperature	Standard: -40 ... +95 °C (-40 ... +203 °F) F: -20 ... +95 °C (-4 .. +203 °F)				Standard: -40 ... +145 °C (-40 ... +293 °F) Sanitary: -40 ... +125 °C (-40 ... +260 °F)	-40 ... +145 °C (-40 ... +293 °F)
Pollution degree	4					
Pressure	8 bar g (120 psi g) Flanged: 0.5 bar g (7.25 psi g)	8 bar g (120 psi g) Flanged: 0.5 bar g (7.25 psi g)	0.5 bar g (7.25 psi g) Flanged: 0.5 bar g (7.25 psi g)	0.5 bar g (7.25 psi g)	Standard: 4 bar g (60 psi g): -40 ... +138 °C (-40 ... +280 °F) Standard: 8 bar g (120 psi g): -40 ... +95 °C (-40 ... +203 °F) Flanged: 0.5 bar g (7.25 psi g) Sanitary: XCT-8: 0.5 bar g (7.25 psi g)	
Design						
Weight	0.8 kg (1.8 lbs)	1.3 kg (2.8 lbs) Flanged: 2 kg (4.4 lbs)	4.3 kg (9.5 lbs)	8 kg (18 lbs)	0.8 kg (1.7 lbs)	1.3 kg (2.8 lbs)
Power supply	Operation of transducer only with approved Siemens Milltronics controllers					
Material	Standard: PVDF Flanged: PVDF with CPVC flange Option: PTFE face with CPVC flange	Standard: PVDF Flanged: PVDF with CPVC flange Option: PTFE face with CPVC flange	Standard: PVDF Flanged: PVDF with CPVC flange Option: PTFE face with CPVC flange	PVDF	Standard: PVDF Options: DERAKANE flange; PTFE face with universal PVDF flange	
Color	Standard: blue F: gray	Standard: blue F: gray	blue	blue	white	
Process connection	Standard: 1" NPT or 1" BSPT F: 1" NPT	Standard: 1" NPT or 1" BSPT F: 1" NPT	1.5" universal thread (NPT or BSPT)		1" NPT or R 1" (BSPT), EN 10226	
Degree of protection	IP66/68	IP66/68	IP66/68	IP66/68	IP66/68	IP66/68
Cable	2 wire twisted pair/braided and foil shielded 0.5 mm² (20 AWG) PVC jacket				2 wire twisted pair/braided and foil shielded 0.5 mm² (20 AWG) silicone jacket	
Separation	Max. 365 m (1200 ft					
Certificates and approvals	Standard: CE[1], CSA, FM, ATEX II 2GD F: FM Class I, Div 1, Groups A, B, C and D, Class II Div 1, Groups E, F and G, Class III	Standard: CE[1], CSA, FM, ATEX II 2GD F: FM Class I, Div 1, Groups A, B, C and D, Class II Div 1, Groups E, F and G, Class III	CE[1], CSA, FM, ATEX II 2G 1D	CE[1], CSA, FM, ATEX II 2G 1D	Standard: CE[1], CSA, FM, ATEX II 2GD Sanitary: CE, CTICK, $CSA_{US/C}$	CE[1], CSA, FM, ATEX II 2GD

[1] EMC certificate available on request.

© Siemens AG 2012

Echomax XPS and XCT

Selection and Ordering data		Order No.
Echomax XPS-10F ultrasonic transducer High-frequency ultrasonic transducer designed for a wide variety of liquid and solid applications, for use with approved controllers. Includes integral temperature sensor. Measuring range: min. 0.3 m, max.10 m	C)	**7ML1170-** ■■■■ **0**
Mounting thread and facing		
1" NPT [(Taper), ANSI/ASME B1.20.1]		**1**
Cable length		
5 m (16.40 ft)		**B**
10 m (32.81 ft)		**C**
30 m (98.43 ft)		**D**
50 m (164.04 ft)		**E**
100 m (328.08 ft)		**F**
Mounting flange, flush mount		
None		**A**
3" ASME, 150 lb, flat faced		**B**
4" ASME, 150 lb, flat faced		**C**
6" ASME, 150 lb, flat faced		**D**
8" ASME , 150 lb, flat faced (Note: Flange bolting patterns and facings dimensionally correspond to the applicable ASME B16.5, or EN 1092-1, or JIS B 2220 standard.)		**E**
Approvals		
FM Class I Div. 1		**1**

C) Subject to export regulations AL: N, ECCN: EAR99.

Selection and Ordering data		Order code
Further designs Please add "**-Z**" to Order No. and specify Order code(s).		
Acrylic coated, stainless steel tag [13 x 45 mm Stainless steel tag [69 x 50 mm (2.71 x 1.97")]: Measuring-point number/identification (max. 27 characters) specify in plain text		**Y15**
Operating Instructions		Order No.
Quick Start guide, multi-language	C)	**7ML1998-1DU01**
Applications Guidelines, multi-language Note: The Applications Guidelines should be ordered as a separate line item on the order.	C)	**7ML1998-5HV61**
This device is shipped with the Siemens Milltronics manual CD containing the complete ATEX Quick Start and Operating Instructions library.		
Accessories		
Tag, stainless steel with hole, 12 x 45 mm (0.47 x 1.77"), one text line for fastening on sensors		**7ML1930-1BJ**
Submergence shield kit		**7ML1830-1BH**
Easy Aimer 2, with ¾" x 1" NPT PVC coupling		**7ML1830-1AQ**
Easy Aimer 304, with stainless steel coupling		**7ML1830-1AU**
Universal box bracket, mounting kit		**7ML1830-1BK**
Channel bracket, wall mount		**7ML1830-1BL**
Extended channel bracket, wall mount		**7ML1830-1BM**
Channel bracket, floor mount		**7ML1830-1BN**
Extended channel bracket, floor mount		**7ML1830-1BP**
Bridge channel bracket, floor mount (see Mounting Brackets on page 5/198 for more information)		**7ML1830-1BQ**
1" NPT locknut, plastic		**7ML1830-1DS**

C) Subject to export regulations AL: N, ECCN: EAR99.

© Siemens AG 2012

Dimensional drawings

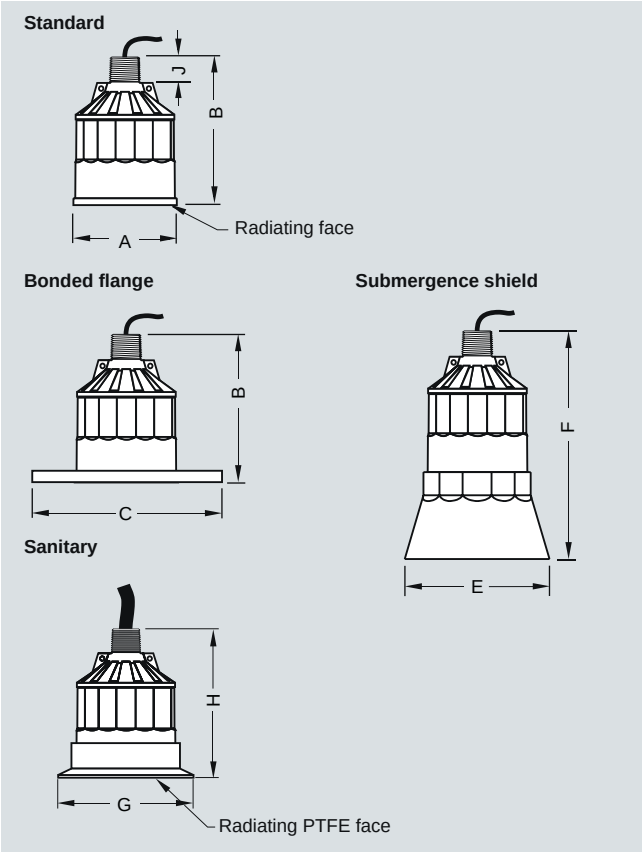

XPS and XCT ultrasonic transducer, dimensions, in mm (inch)

Version Dimension	XPS-10	XPS-15	XPS-30	XPS-40
A	88 mm (3.464")	121 mm (4.764")	175 mm (6.890")	206 mm (8.110")
B	122 mm (4.803")	132 mm (5.197")	198 mm (7.795")	229 mm (9.016")
C	According to ASME, DIN and JIS			n/a
E	124 mm (4.882")	158 mm (6.220")	n/a	n/a
F	152 mm (5.984")	198 mm (7.795")	n/a	n/a
J	28 mm (1.1")	28 mm (1.1")	28 mm (1.1")	28 mm (1.1")

Version Dimension	XCT-8	XCT-12
A	88 mm (3.464")	121 mm (4.764")
B	122 mm (4.803")	132 mm (5.197")
C	According to ASME, DIN and JIS	
E	n/a	n/a
F	n/a	n/a
G	Sanitary version: 119 mm (4.68")	n/a
H	Sanitary version: 122 mm (4.8")	n/a
J	28 mm (1.1")	28 mm (1.1")

Schematics

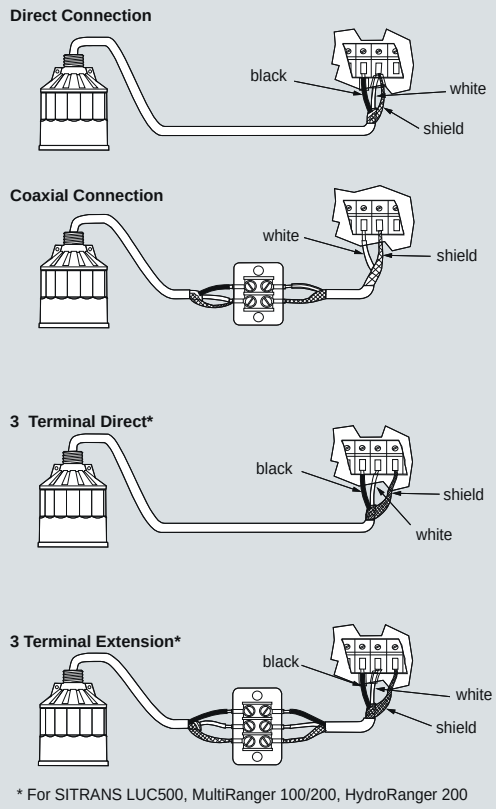

* For SITRANS LUC500, MultiRanger 100/200, HydroRanger 200

Mounting
Make particularly sure that the radiating face of the transducer is protected from damage. Mount the transducer so that it is above the maximum material level by at least the blanking value. On liquid applications, the transducer must be mounted so that the axis of transmission is perpendicular to the liquid surface. On solids alications, a Milltronics Easy Aimer should be used to facilitate aiming the transducer. Consider the optional temperature sensor when mounting the transducer.

Interconnection
Do not route cable openly or near high voltage or current runs, contactors and SCR control drives. For optimum isolation against electrical noise, run cable separately in a grounded metal conduit. Seal all thread connections to prevent ingress of moisture.

XPS and XCT ultrasonic transducer connections

Instruction Manual · July 2009

million
in one

multiranger 100/200

SIEMENS

Safety Guidelines: Warning notices must be observed to ensure personal safety as well as that of others, and to protect the product and the connected equipment. These warning notices are accompanied by a clarification of the level of caution to be observed.

Qualified Personnel: This device/system may only be set up and operated in conjunction with this manual. Qualified personnel are only authorized to install and operate this equipment in accordance with established safety practices and standards.

Unit Repair and Excluded Liability:

- The user is responsible for all changes and repairs made to the device by the user or the user's agent.
- All new components are to be provided by Siemens Milltronics Process Instruments Inc.
- Restrict repair to faulty components only.
- Do not reuse faulty components.

Warning: Cardboard shipping package provides limited humidity and moisture protection. This product can only function properly and safely if it is correctly transported, stored, installed, set up, operated, and maintained.
This product is intended for use in industrial areas. Operation of this equipment in a residential area may cause interference to several frequency based communications.

Note: Always use product in accordance with specifications.

Copyright Siemens Milltronics Process Instruments Inc. 2009. All Rights Reserved	Disclaimer of Liability
This document is available in bound version and in electronic version. We encourage users to purchase authorized bound manuals, or to view electronic versions as designed and authored by Siemens Milltronics Process Instruments Inc. Siemens Milltronics Process Instruments Inc. will not be responsible for the contents of partial or whole reproductions of either bound or electronic versions.	While we have verified the contents of this manual for agreement with the instrumentation described, variations remain possible. Thus we cannot guarantee full agreement. The contents of this manual are regularly reviewed and corrections are included in subsequent editions. We welcome all suggestions for improvement. Technical data subject to change.

MILLTRONICS® is a registered trademark of Siemens Milltronics Process Instruments Inc.

Contact SMPI Technical Publications at the following address:
Technical Publications
Siemens Milltronics Process Instruments Inc.
1954 Technology Drive, P.O. Box 4225
Peterborough, Ontario, Canada, K9J 7B1
Email: techpubs.smpi@siemens.com

European Authorized Representative

Siemens AG
Industry Sector
76181 Karlsruhe
Deutschland

- For a selection of Siemens Milltronics level measurement manuals, go to: **www. siemens.com/processautomation**. Under Process Instrumentation, select *Level Measurement* and then go to the manual archive listed under the product family.
- For a selection of Siemens Milltronics weighing manuals, go to: **www. siemens.com/processautomation**. Under Weighing Technology, select *Continuous Weighing Systems* and then go to the manual archive listed under the product family.

© Siemens Milltronics Process Instruments Inc. 2009

Table of Contents

The MultiRanger 100 and 200 1

MultiRanger 100 1
MultiRanger 200 1
The Manual 1
Manual Symbols 2
Configuration Examples 2

Specifications 3

Installation 8

Mounting 8
Mounting Locations 8
Mounting Instructions 9
Wall Mount 9
Cable routed through a conduit: 10
Panel Mount 11
Mounting the Enclosure 12
MultiRanger Board 13
Installing the Battery 13
Installing SmartLinx Card 14

Wiring 15

Terminal Board 16
Cables 16
Transducers 17
Relays 17
Temperature Sensor 18
mA Input [MR 200 only] 18
mA Output 18
Level System Synchronization 19
Power 19
Digital Communications 20
RS-232 Serial Connection 20
RS-485 Serial Connection 20
Discrete Inputs 21

Operating the MultiRanger 22

RUN Mode 22
Readings in RUN Mode 23
Status Parameters 24
Controlling the Display 25
Adjusting the primary reading for four-digit LCD readout: 25
Auxiliary Reading 25
Multiple Readings [MR 200 only] 26
PROGRAM Mode 27
Starting PROGRAM Mode 27

Hand Programmer 27
Programmer Keys 28
Dolphin Plus 29
Dolphin Plus Toolbar Buttons 30
SIMATIC Process Device Manager (PDM) 31
Device Description 31
Activating the MultiRanger 32
Changing Parameters 32
Security 33
Using Units or Percent (%) 33
Parameters Types 33
Parameter Reset 34
Display Readout 34
Changing Parameters(Dolphin Plus) 35
Parameter Indexing 36
Primary and Secondary Indexes 37
Primary Index 37
Secondary Index.... 37
Starting Measurement 38
Single Point Models 38
Average or Differential [MR 200 only].... 39
Dual Point Models 39
Average or Differential [MR 200 only].... 40
Measurement Conditions 40
Response Rate.... 40
Dimensions [MR 200 only].... 40
Failsafe.... 40

Relays 41

General Introduction 41
Relay Function 41
Alarm.... 41
Pump.... 42
Miscellaneous.... 42
Relay Status – Non Run Modes 43
Relay States 43
Relay Related Parameters 43
Relay Wiring Test.... 44
Relay Activation 44
Relay Failsafe 45
Preset Applications 46

Backup Level Override 47

Backup Level Override Parameters 47

Discrete Inputs 48

Wiring the Discrete Inputs 48
Programming the Discrete Input Logic 48

mA I/O 49

mA Input [MR 200] 49
mA Output 49

Volume [MR 200] 51

Readings 51
Tank Shape and Dimensions 51
Characterization Chart [MR 200] 52
Example Chart 52
MultiRanger 200 only 53

Alarms 54

Level 54
Setting Simple Level Alarms 55
Rate [MR 200] 55
In Bounds/ Out of Bounds Range [MR 200] 56
Cable Fault 56
Temperature [MR 200] 56
Loss of Echo (LOE) 57

Pump Control 58

Setting a Pump Down Group 58
Setting a Pump Up (Reservoir) Group 59
Other Pump Control Algorithms 61
Set Relays to ALTERNATE DUTY BACKUP [MR 200] 61
Set Relays to FIXED DUTY ASSIST 61
Set Relays to FIXED DUTY BACKUP [MR 200] 62
Set Relays to ALTERNATE DUTY SERVICE [MR 200] 62
Set Relays to FIRST IN FIRST OUT (FIFO) ASSIST [MR 200] 63
Optional Pump Controls 63
Starting Pumps by Rate of Level Change [MR 200] 63
Rotating Pumps by Service Ratio [MR 200] 64
Totalizing Pumped Volume [MR 200] 65
Setting Independent Failsafe Controls 65
Setting a Pump to Run On [MR 200] 66
Setting the Pump Start Delays [MR 200] 66
Reducing Wall Cling [MR 200] 66
Grouping Pumps [MR 200] 67
Setting a Flush Valve [MR 200] 67
Relay Controlled by Communications 68
Tracking Pump Usage 68

Rake (Screen) Control [MR 200] 69

Setting a Rake Control 69

Setting the Common Parameters 70
Set Relay 1 (Operate Rake) 70
Set Relays 2 to 4 (Level Alarms) 70

External Totalizers and Flow Samplers [MR 200] 71

Relay Contacts 71
Totalizer 71
Flow Sampler 72
Based on Volume and Time 72

Open Channel Monitoring (OCM) [MR 200] 73

Common Parameters 73
Setting Zero Head 74
Setting Totalized Volume 75
Applications Supported by MultiRanger 200 75
BS-3680 / ISO 1438/1 Thin plate V notch weir 75
BS-3680 / ISO 4359 Rectangular Flume 76
Palmer Bowlus Flume 77
H Flume 78
PMDs with Exponential Flow to Head Function 79
Applicable Weir Profiles 79
Non-Applicable Weir Profiles 80
Parshall Flume 80
Leopold Lagco Flume 81
Cut Throat Flume 82
Universal Calculation Support 83
Typical Flow Characterization 83
Example Flumes 84
Example Weirs 84

Testing the Configuration 85

Simulation 85
Simulating a Single Measurement 85
Simulating a Level Cycle 85
Checking Volume Characterization [MR 200] 86
Checking OCM Flow Characterization [MR 200] 86
I/O Checkout 87
Application Test 87

MultiRanger Communications 89

MultiRanger Communication Systems 89
Optional SmartLinx® Cards 89
Communication Systems 90
Communication Ports 90
Modbus 90
SmartLinx 91
Dolphin Plus 91

Communications Installation 92

Wiring Guidelines 92
Ports 1 and 2 92
Ports 1 and 2: RS-232 RJ-11 Jack and RS-485 Locations 92
Port 1: RS-232 RJ-11 Jack 93
Port 2: RS-485 93
Configuring Communication Ports (Parameters) 94

Modbus Register Map 97

Word Order (R40,062) 98
Map ID (R40,063) 98
Product ID (R40,064) 99
Point Data (R41,010 – R41,031) 99
Totalizer (R41,040 – R41,043) 99
Input/Output (R41,070 – R41,143) 99
Discrete Inputs (R41,070) 100
Relay Outputs (R41,080) 100
mA Input (R41,090) [MR 200] 100
mA Output (R41,110-41,111) 100
Pump Control (R41,400 – R41,474) 100
Pump ON Setpoint (R41,420 – R41,425) 100
Pump OFF Setpoint (R41,430 – R41,435) 101
Pumped Volume (R41,440 – R41,443) [MR 200] 101
Pump Hours (R41,450 – R41,461) 101
Pump Starts (R41,470 – R41,475) 101
Parameter Access (R43,998 – R46,999) 102
Parameter Indexing 102
Indexing the Parameter Access Area 102
Reading Parameters 103
Global Index Method (P782 = 0) 103
Parameter Specific Index Method (P782 = 1) 103
Writing Parameters 104
Global Index Method (P782 = 0) 104
Parameter Specific Index Method (P782 = 1) 104
Format Words (R46,000 to R46,999) 105
Global Index Method (P782 = 0) 105
Parameter-Specific Index Method (P782 = 1) 105
Format Registers 105

Data Types 107

Numeric Values 107
Bit Values 107
Unsigned Double Precision Integer (UINT32) 107
Split Values 108
Text Messages 109
Relay Function Codes (P111 Only) 110

Error Handling 111

Modbus Responses 111

Error Handling 111

Communication Troubleshooting 113

Generally 113
Specifically 113

Communication Appendix A: Single Parameter Access (SPA) 114

Mapping 114
Reading Parameters 114
Writing Parameters 115
Format Register 115
Error Codes 116

Parameter Reference 117

MultiRanger 100 and MultiRanger 200 117
Helpful Hints 117
Index types 118
Quick Start (P001 to P007) 119
For DPD and DPA Programming [MR 200] 120
Volume (P050 to P055) [MR 200] 123
Display and Reading (P060 to P062) 127
Backup Level Override 129
Failsafe (P070 to P072) 131
Relays (P100 to P119) 132
MultiRanger 200 134
Pump Setpoint Modifiers (P121 and P122) [MR 200] 139
Independent Relay Failsafe (P129) 140
Advanced Pump Control Modifiers (P130 to P137) [MR 200] 141
Flush Systems (P170 to P173) [MR 200] 144
mA Output (P200 to P219) 146
Independent mA Setpoints (P210 and P211) 149
mA Output Limits (P212 and P213) 149
mA Output Trim (P214 to P215) 150
mA Output Failsafe (P219) [MR 200] 151
mA Input (P250 to P260) [MR 200] 151
Discrete Input Functions (P270 to P275) 153
Standard Data Logging (P300 to P321) 154
Record Temperatures (P300 to P303) 154
Record Readings (P304 and P305) 156
Pump Records (P309 to P312) 156
Flow Records (P320 and P321) [MR 200] 158
LCD Totalizer (P322 and P323) [MR 200] 158
Profile Records (P330 to P337) 159
Auto Record ON and OFF Setpoints (P334 to P337) 162
Installation Records (P340 to P342) 164
Open Channel Monitoring (P600 to P621) [MR 200] 165
Example Exponents 167
Pumped Volume Totalizer (P622) [MR 200] 174
Totalizer (P630 to P645) [MR 200] 175
Range Calibration (P650 to P654) 178

Temperature Compensation (P660 to P664) 181
Rate (P700 to P708) 183
Measurement Verification (P710 to P713) 187
Transducer Scanning (P726 to P729) 190
Display (P730 to P739) 191
SmartLinx Reserved (P750 to P769) 194
Communications (P770 to P782) 194
SmartLinx Hardware Testing (P790 to P795) 197
Echo Processing (P800 to P807) 199
Advanced Echo Processing (P815 to P825) 203
Advanced TVT Adjustment (P830 to P835) 207
Advanced Shot Adjustment (P840 to P852) 212
Test (P900 to P913) 215
Measurement (P920 to P927) 218
Master Reset (P999) 221

Appendix A: Index Types 223

Index types 223

Appendix B: Technical Reference 224

Transmit Pulse 224
Echo Processing 224
TVT (Time Varying Threshold) curves 225
Auto False-Echo Suppression 225
Distance Calculation 226
Sound Velocity 226
Scanning 227
Volume Calculation [MR 200] 227
Universal, Curved [MR 200] 228
Flow Calculation 228
Universal, Linear [MR 200] 229
Universal, Curved [MR 200] 229
Maximum Process Speed 230

Appendix C: Troubleshooting 231

Common Problems Chart 231
Noise Problems 232
Determine the Noise Source 232
Non-Transducer Noise Sources 233
Common Wiring Problems 233
Reducing Electrical Noise 233
Reducing Acoustical Noise 233
Measurement Difficulties 234
Flashing LOE Display 234
Adjust Transducer Aiming 234
Increase Failsafe Timer Value 235
Install a Transducer with a Narrower Beam.... 235
Use Dolphin Plus to Debug Echo.... 235
Fixed Reading 235

Obstructions in the Sound Beam 235
Nozzle Mountings 235
Set the MultiRanger to Ignore the Bad Echo 236
Wrong Reading 236
Types of Wrong Readings 236
Liquid Splashing 236
Adjust the Echo Algorithm 236
Transducer Ringing 237
Unit Repair and Excluded Liability 238

Appendix D: Pump Control Reference 239

Pump Control Options 239
Pump Groups 239
Pump by Rate [MR 200] 239
Pump Control Algorithms 239
Fixed Duty Assist (P111 = 50) 240
Fixed Duty Backup (P111 = 51) [MR 200] 240
Alternate Duty Assist (P111 = 52) 241
Alternate Duty Backup (P111 = 53) [MR 200] 241
Service Ratio Duty Assist (P111 = 54) [MR 200] 242
Service Ratio Duty Backup (P111 = 55) [MR 200] 243
First In First Out (FIFO) (P111 = 56) [MR 200] 243
Pump by Rate (P121) [MR 200] 243
Other Pump Controls [MR 200] 243

Appendix E: Updating Software 245

Updating Software 245

Appendix F: Upgrading 246

Mounting a MultiRanger 100/200 246
Connecting the Transducer 246
Coaxial Transducer Extention 246
Connecting a transducer with RG62 coaxial extension cable 247
MultiRanger Plus to MultiRanger 100/200 Parameters 248

Appendix G: Conduit Entry for Class 1, Div 2 Applications 249

Appendix H: Hazardous Area Installations 251

Appendix J: Software Revision History 253

MultiRanger 100 253
MultiRanger 200 256

Programming Charts 259

The MultiRanger 100 and 200

The MultiRanger is available in two models, MultiRanger 100 and MultiRanger 200, and is designed for a variety of applications:

- water and wastewater
- storage tanks, for measuring liquids, slurries, and solids
- hoppers, ore bunkers, flotation cells

MultiRanger 100

The MultiRanger 100 is a single or dual-point level, one, three, or six relay measurement device. It is equipped with digital communications and offers the latest in echo processing technology and diagnostic features.

MultiRanger 200

The MultiRanger 200 is a single or dual-point, three or six relay device that offers both level and volume measurement. It has Open Channel Monitoring capabilities, a larger number of advanced pump control algorithms, and is equipped with digital communications. It offers the latest in echo processing technology and diagnostic features.

The Manual

Notes:

- This product is intended for use in industrial areas. Operation of this equipment in a residential area may cause interference to several frequency based communications.
- Please follow the installation and operating procedures for a quick, trouble-free installation and to ensure the maximum accuracy and reliability of your MultiRanger.

The manual provides instruction for both MultiRanger 100 and MultiRanger 200 models. For your convenience, the manual uses MultiRanger 100 features as its standard content. Additional MultiRanger 200 features are clearly marked.

The manual is designed to help you get the most out of your MultiRanger, and it provides information on the following:

- How to program the unit
- Example applications
- Principles of operation
- Parameter values
- Parameter uses
- Outline diagrams
- Wiring diagrams
- Installation requirements
- Modbus® [1] register mapping
- Modem configuration

1. Modbus is a registered trademark of Schneider Electric.

If you have any questions, comments, or suggestions about the manual contents, please email us at techpubs.smpi@siemens.com.

For the complete library of Siemens Milltronics manuals, go to www.siemens.com/processautomation.

Manual Symbols

Please note their use carefully.

∿	Alternating Current
⎓	Direct Current
⏚	Earth (ground) Terminal
⏚	Protective Conductor Terminal
⚠	Caution (refer to instructions)
	Infra-red communication port on front of instrument
	RJ-11 communications port
	No co-axial cable connections

Configuration Examples

The configuration examples used in this manual illustrate the versatility of the MultiRanger. Because there is often a range of ways to approach an application, other configurations may also apply.

In all examples, substitute your own application details. If the examples do not apply to your application, check the applicable parameter reference for the available options.

Should you require more information, please contact your Siemens Milltronics representative. For a complete list of Siemens Milltronics representatives, go to www.siemens.com/processautomation.

Specifications

Power

AC version

- 100-230 V AC ± 15%, 50 / 60 Hz, 36 VA (17W)[1]
- fuse: F3: 2 AG, Slow Blow, 0.375A, 250V

DC version

- 12-30 V DC, 20W[1]
- fuse: F3: 2 AG, Slow Blow, 2A, 250V

Transmitter fuse

- F1: Belling Lee, L754, 4000A HRC, ceramic type, 100mA, 250V

Temperature Sensor fuse

- F2: Belling Lee, L754, 4000A HRC, ceramic type, 50mA, 250V

Mounting

Location

- indoor / outdoor

Altitude

- 2000 m max.

Ambient temperature

- -20 to 50 °C (-5 to 122 °F)

Relative humidity

- Wall Mount: suitable for outdoors (Type 4X / Nema 4X, IP65 Enclosure)
- Panel Mount: suitable for outdoors (Type 3 / Nema 3, IP54 Enclosure)

Installation category

- II

Pollution degree

- 4

1. Power consumption is listed at maximum.

Range

- 0.3 m (1 ft) to 15 m (50 ft), dependent on transducer

Accuracy

- 0.25% of maximum range or 6 mm (0.24”), whichever is greater

Resolution

- 0.1% of program range[1] or 2 mm (0.08”), whichever is greater

Memory

- 1 MB static RAM with battery backup
- 512 kB flash EPROM

Programming

Primary

- handheld programmer

Secondary

- PC running SIMATIC PDM
- PC running Dolphin Plus software

Display

- back lit LCD

Temperature Compensation

- Range: -50 to 150 °C (-58 to 302 °F)

Source

- integral transducer sensor
- TS-3 temperature sensor
- programmable fixed temperature

Temperature Error

Sensor

- 0.09 % of range

1. Program range is defined as the empty distance from the face of the transducer (P006) plus any range extension (P801).

Fixed

- 0.17 % per °C deviation from programmed value

Outputs

Transducer drive

- 315 V peak

mA Analog

MultiRanger 100/200:
Single or Dual point versions include two mA outputs

- 0-20 mA
- 4-20 mA
- 750 ohm maximum
- Resolution of 0.1%
- Isolated

Relays[1]

- One:
  - 1 control
- Three:
  - 2 control
  - 1 alarm control
- Six:
  - 4 control
  - 2 alarm control
- All relays rated 5A at 250 V AC, non-inductive

Control Relays

- 1, 2 or 4 Form **A**, **NO** relays (numbers 1, 2, 4, 5)

Alarm Relay

- 0, 1 or 2 Form **C**, **NO**, or **NC** relay (numbers 3, 6)

Communication

- RS-232 running Modbus RTU and ASCII via RJ-11 connector
- RS-485 running Modbus RTU and ASCII via terminal blocks

Optional

- SmartLinx® compatible

1. All relays are certified only for use with equipment that fails in a state at or under the rated maximums of the relays.

Inputs

mA (analog) (1) [MR 200 only]

- 0-20 or 4-20 mA, from alternate device, scalable

Discrete (2)

- 10-50 V DC switching level
- logical 0 = < 0.5 V DC
- logical 1 = 10 to 50 V DC
- 3 mA maximum draw

Enclosure

Wall Mount

- 240 mm (9.5") x 175 mm (6.9"). Width dimension includes hinges.
- Type 4X / NEMA 4X / IP 65[1]
- Polycarbonate

Panel Mount

- 278 mm (10.93") x 198 mm (7.8") Width dimension includes flange.
- Type 3 / Nema 3 / IP54
- Polycarbonate

Weight

- Wall mount: 1.37 kg (3.02 lb)
- Panel mount: 1.5 kg (3.3 lb)

Approvals

- See product nameplate

Compatible Transducers

- Echomax series and STH series

Transducer Frequency

- 44 kHz

1. For watertight applications, use only approved, suitable size hubs in the enclosure's conduit holes.

Cable

- Do not use coaxial cable for transducer (see General Appendix F: Upgrading on page 246 for more information)
- transducer and mA output signal to be 2 copper conductors, twisted with shield/drain wire, 300 Vrms, 0.324 - 0.823 mm^2 (22 - 18 AWG), nominal capacitance between adjacent conductors @ 1kHz = 62.3 pF/m (19 pF/ft). Nominal capacitance between conductor and shield @ 1kHz = 108.3 pF/m (33 pF/ft) (Belden® [1] 8760 is acceptable)
- 365 m maximum

Note: The MultiRanger is to be used only in the manner outlined in this instruction manual or protection provided by the equipment may be impaired.

1. Belden is a registered trademark of Belden Wire & Cable Company.

Installation

Notes:

- Installation must only be performed by qualified personnel, and in accordance with local governing regulations.
- This product is susceptible to electrostatic shock. Follow proper grounding procedures.

⚠ **All field wiring must have insulation suitable for at least 250 V.**

⚠ **Hazardous voltage present on transducer terminals during operation.**

⚠ **DC terminals shall be supplied from an SELV source in accordance with IEC 1010-1 Annex H.**

- The non-metallic enclosure does not provide grounding between conduit connections. Use grounding type bushings and jumpers.

Mounting

Mounting Locations

Recommended

- Ambient temperature is always within -20 to 50 °C (-5 to 122 °F)
- MultiRanger display window is at shoulder level, unless most interaction is through a SCADA system
- Easy access for hand programmer is provided
- Cable length requirements are minimal
- Mounting surface is free from vibration
- Leave is sufficient room to swing unit lid open and have clear access.
- A place for a laptop computer is provided for on-site Dolphin Plus configuration

Avoid

- Exposure to direct sunlight. (Provide a sun shield to avoid direct sunlight.)
- Proximity to high voltage/current runs, contacts, SCR or variable frequency motor speed controllers

Mounting Instructions

The wall mount and panel mount units install differently. Please follow the specific instructions for your unit.

Note: When routing cable through a conduit, please follow the Cable Routing instructions on page 10 before mounting the MultiRanger.

Wall Mount

Enclosure Dimensions

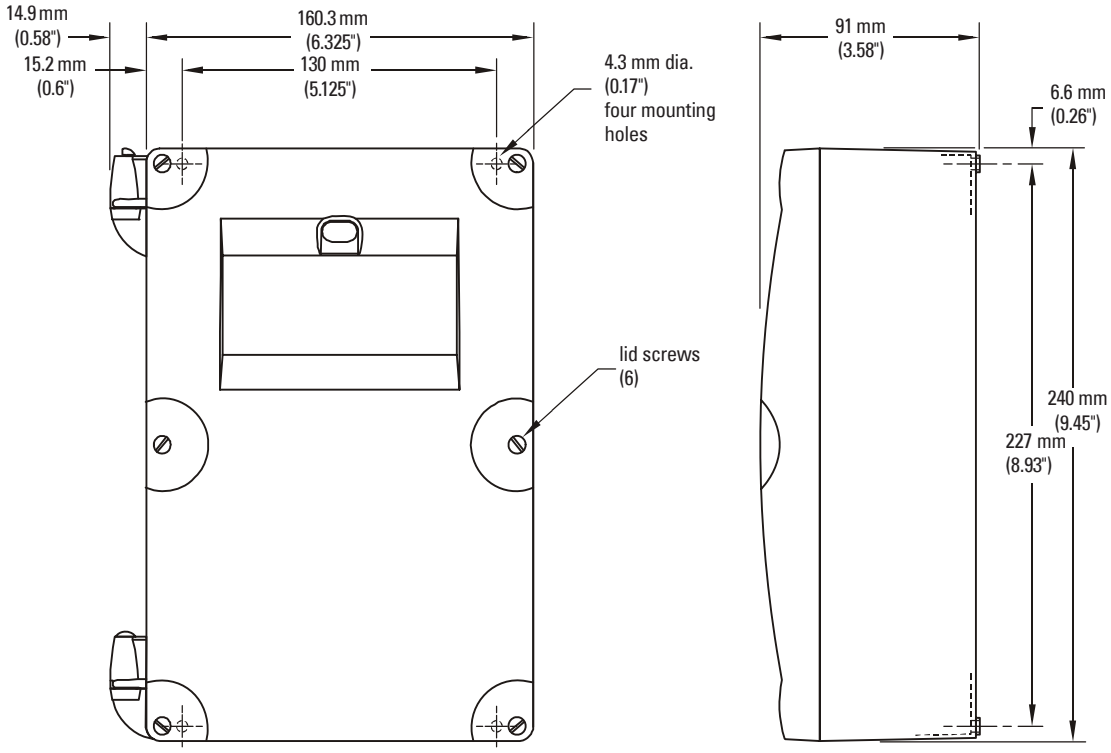

Mounting the Enclosure

1. Remove the lid screws and open the lid to reveal the mounting screw holes.
2. Mark and drill four holes in the mounting surface for the four screws (customer supplied).
3. Fasten with a long screwdriver.

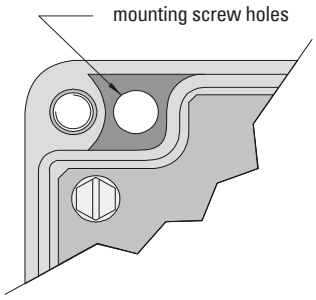

Please note:

- Recommended mounting: directly to wall or to electrical cabinet back panel
- Recommended mounting screws: #6
- If alternate mounting surface is used, it **MUST** be able to support four times the weight of the unit.

Installation

Cable routed through a conduit:

1. Remove the four mounting screws holding the motherboard to the enclosure.
2. Be careful not to damage the electronics with static electricity. Remove the motherboard from the enclosure by pulling the board straight out.
3. Drill the required cable entry holes. Make sure conduit holes do not interfere with the lower areas on the terminal block, circuit board, or SmartLinx card.
4. Attach the conduit to the enclosure using only approved suitable size hubs for watertight application.
5. Reinstall the motherboard with the mounting screws.

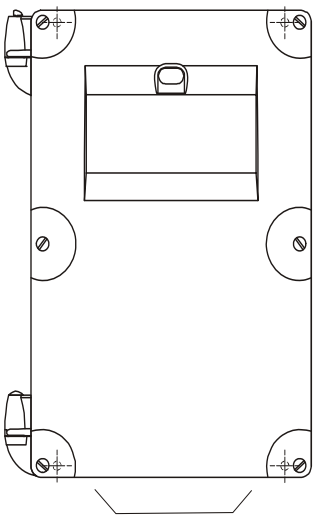

suitable location for conduit entrances

Note: For conduit locations and assembly for hazardous mounting in Class 1 Div 2 applications, please see Drawing 23650314 in *Appendix G: Conduit Entry for Class 1, Div 2 Applications* on page 249.

Installation

Cable exposed and entering through the cable glands:

1. Unscrew the glands and attach them loosely to the enclosure.
2. Thread the cables through the glands. Ensure the power cable is kept separated from the signal cables and then wire the cables to the terminal blocks.
3. Tighten the glands to form a good seal.

Note: Where more holes are required than are supplied in the enclosure, follow the *Cable routed through a conduit* steps.

Panel Mount

Installing the panel mount unit requires making a cutout in the panel. The dimensions for the cutout are provided in the illustration below. A full size cutout template is provided with your unit or may be downloaded from www.siemens.com/processautomation.

Cutout Dimensions

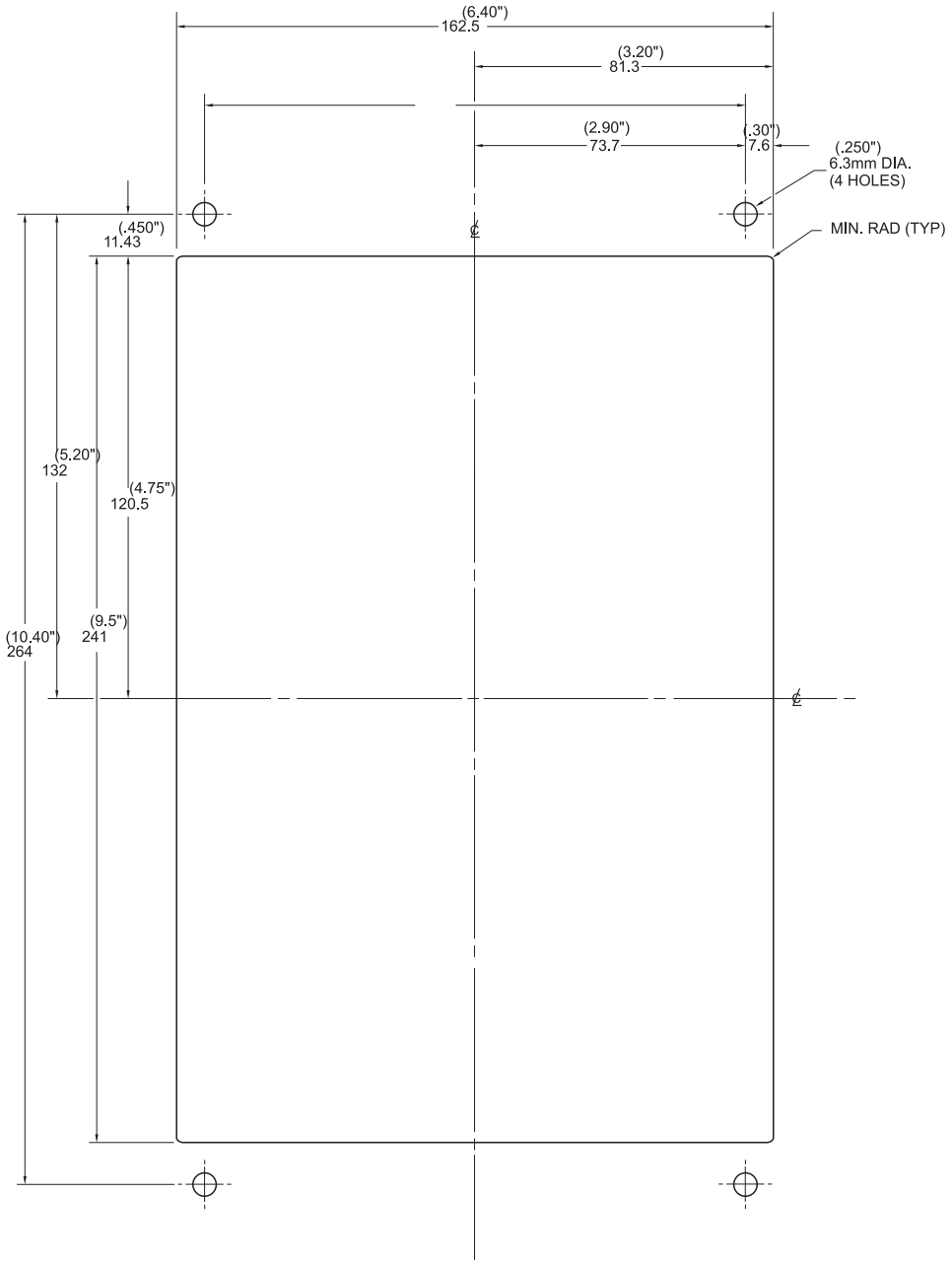

Cutout Instructions

1. Select a place for the unit and fasten the template onto the panel (use tape or tacks).
2. Drill the four fastener holes.
3. Make the cutout using the appropriate tools.
4. Mount unit according to the instructions in this manual.

Installation

Panel Mount Dimensions

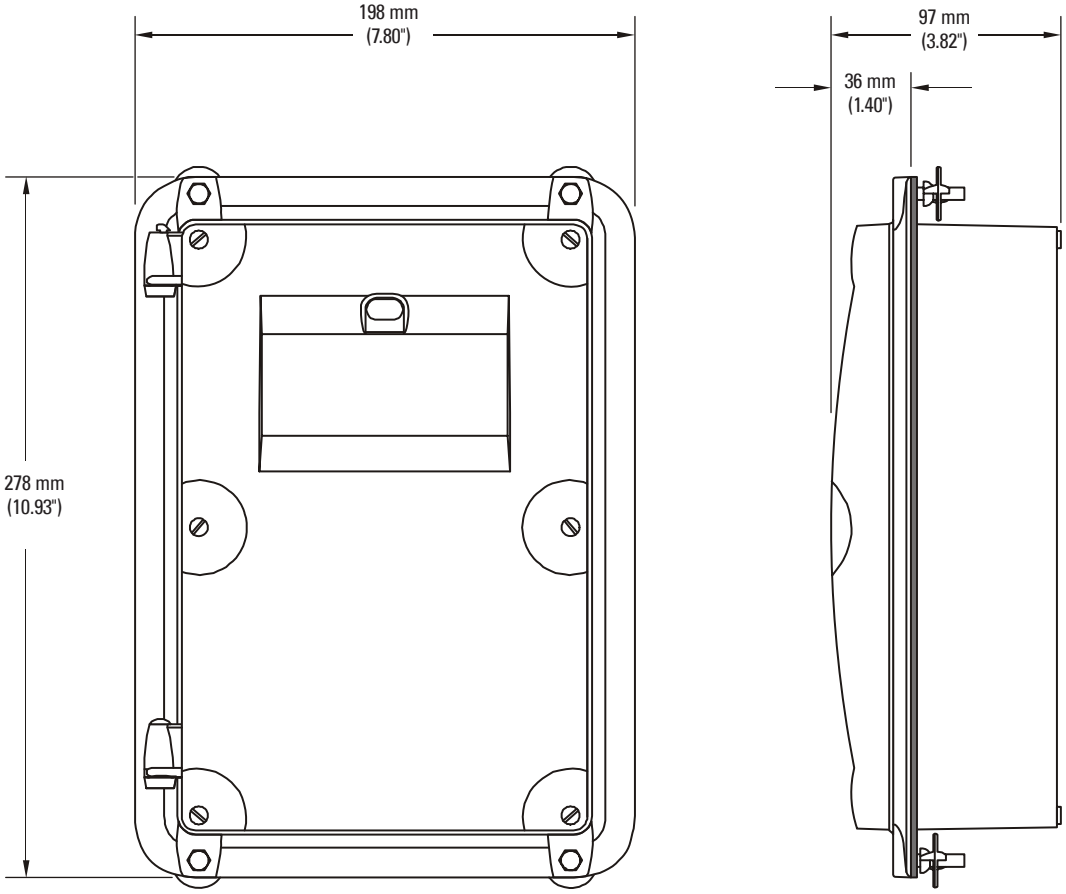

Mounting the Enclosure

Once cutout is complete and mounting holes are drilled, follow these steps:

1. Remove lid from unit by undoing the six lid screws and lifting it off its hinges.
2. Remove the four screws holding the motherboard to the enclosure.
3. Be careful not to damage the electronics with static electricity. Remove the motherboard from the enclosure by pulling the board straight out.
4. Drill the required cable entry holes. Be sure to compensate for panel door dimensions and make sure conduit holes do not interfere with the lower areas on the terminal block, circuit board, or SmartLinx card.
5. Replace board and fasten the four screws.
6. Place the unit into the panel and insert hexagonal fasteners through bevel slots and predrilled panel holes.
7. Fasten with wingnuts and hand tighten.
8. Add conduit or glands and wire as required, then replace the lid.

Helpful hint:

- Use tape to hold hexagonal heads in slots while attaching wingnuts.

MultiRanger Board

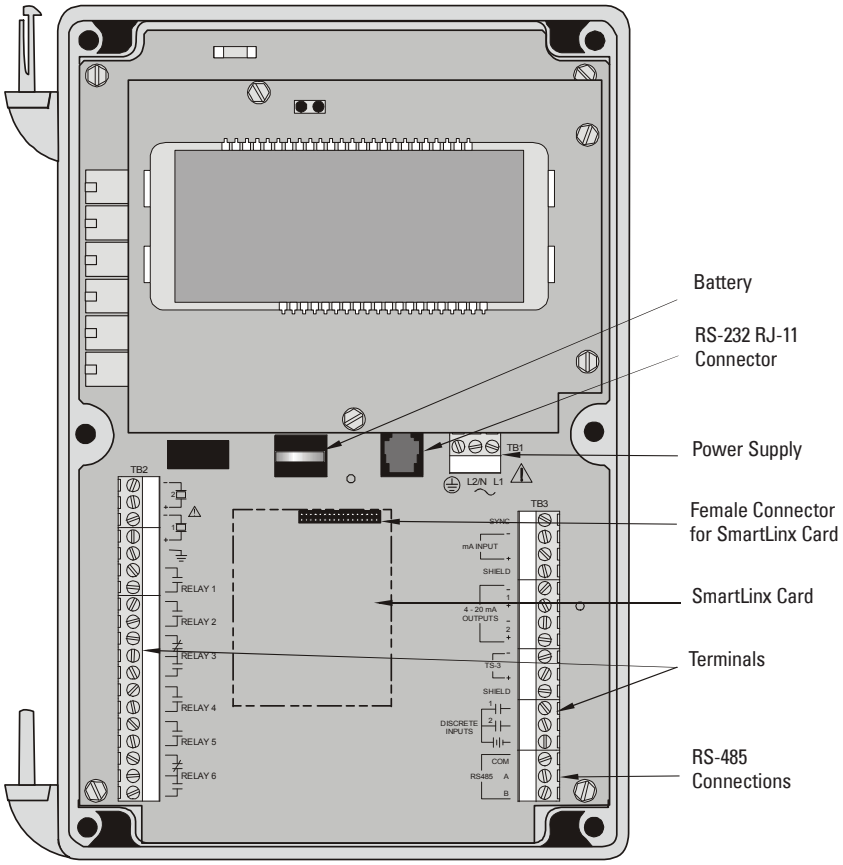

Installing the Battery

The battery (Rayovac BR2032) has a ten-year life expectancy. Please note the life expectancy may be reduced by ambient temperature. If the unit loses external and battery power, a capacitor will power the RAM for about ten minutes.

Disconnect power before replacing the battery.

Installation Steps

1. Open the enclosure lid.
2. Slide the battery into the holder. Be sure to align the + and – terminals correctly.
3. Close and secure enclosure lid.

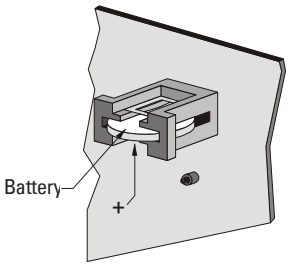

Note: All parameter values are written to the EEPROM once every hour. The battery is used to backup Standard Data Logging parameters (P300-P321) between writes, in case of power failure.

Installation

Installing SmartLinx Card

SmartLinx cards are generally pre-installed. If unit does not have a SmartLinx card, follow these steps to install one.

1. Align card with the two mounting posts and then press-fit with the female connector.
2. Use the screws supplied with the card to attach it to the mounting posts.
3. Wire in the SmartLinx card according to SmartLinx Manual.

Please note:

- Verify that all system components are installed in accordance with instructions.
- Connect all cable shields to the MultiRanger Shield Terminals. Avoid differential ground potentials by not connecting cable shields to ground (earth) anywhere.
- Keep exposed conductors on shielded cables as short as possible to reduce noise on the line caused by stray transmissions and noise pickup.

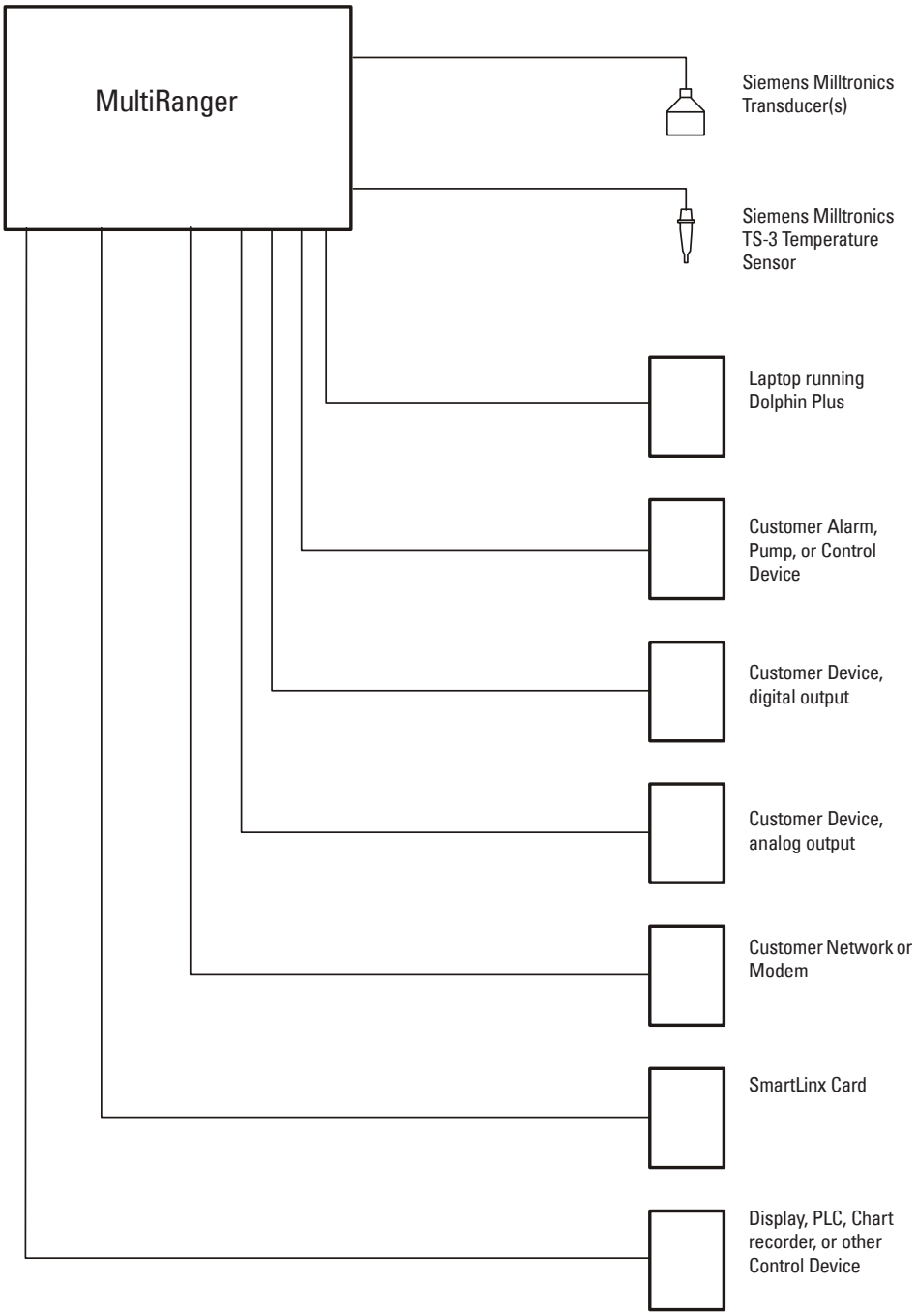

Terminal Board

The terminal board on the MultiRanger allows all inputs and outputs to be connected simultaneously.

Note: Recommended torque on terminal clamping screws.
- 0.56 - 0.79 Nm
- 5 - 7 in.lbs

Please do not overtighten the screws.

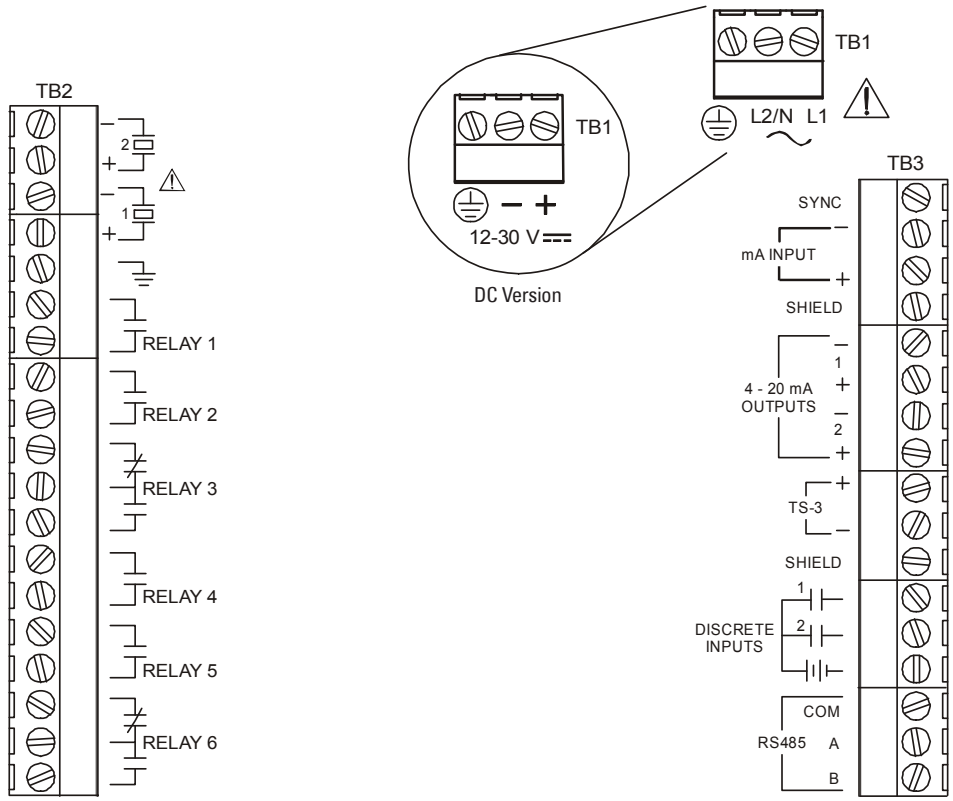

Cables

The MultiRanger transceiver requires a shielded two-wire connection to the transducer.

Connection	Cable Type
mA input and mA output sync, Temperature sensor, discrete input, dc input Transducer	2 copper conductors, twisted, with shield[1]/drain wire, 300V 0.324 - 0.823 mm^2 (22 - 18 AWG) **Maximum length**: 365 m
	Do not use a coaxial transducer cable extension with the MultiRanger. Electrical noise interference affects performance.
Relay output AC input	Relay to be copper conductors per local requirements to meet 250 V 5A contact rating.

1. Preferred shielding is braided screen.

Transducers

Warning: Hazardous voltage present on transducer terminals during operation.

Run the transducer cable in a grounded metal conduit, separate from other wiring (except TS-3 temperature sensor wiring, if applicable).

Notes:

- Do not use coaxial cable because of electrical noise interference
- Do not connect the shield and white transducer wires together; wire to separate terminals
- Disregard older transducer manuals that recommend these practices

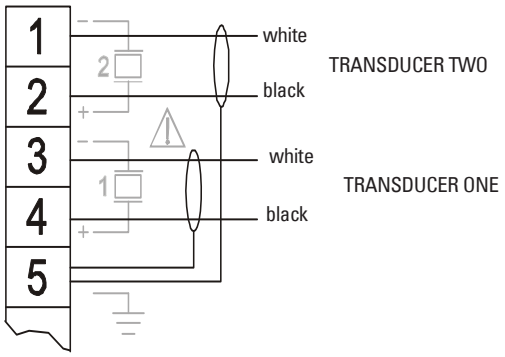

A 0.1 µF (100V or greater) capacitor is included with the MultiRanger for retrofitting old MultiRanger Plus installations. Please see *MultiRanger 100/200 Installation (for retrofitting MultiRanger Plus Installations)* on page 247.

Relays

Relay contacts are shown in the de-energized position. All relays are handled identically and can be configured as positive or negative logic using P118.

Relay Ratings

- four Form **A**, NO relays(1,2,4,5)
- two Form **C**, NO or NC relays (3,6)
- 5A at 250Vac, non-inductive

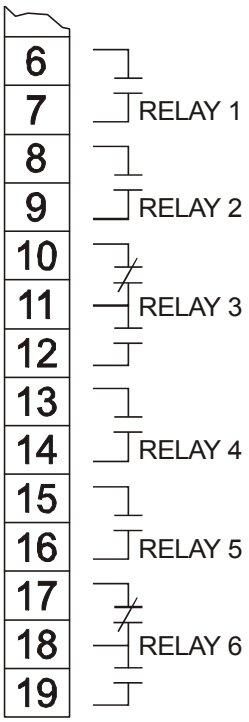

Power Failure

Relays 1, 2, 4, and 5 are normally open and will fail in the normal state.

Relays 3 and 6 can be wired either normally open or normally closed, and will fail in their de-energized states.

Temperature Sensor

Accurate temperature readings are critical to accurate level measurements because the speed of sound changes, depending on air temperature, and all Siemens Milltronics Echomax and ST-H transducers have an internal temperature sensor.

If the following conditions apply, a separate TS-3 temperature sensor will ensure optimum accuracy:

- the transducer is exposed to direct sunlight (or other radiant heat source)
- the transducer face and monitored surface temperature differs
- faster response to temperature changes is required

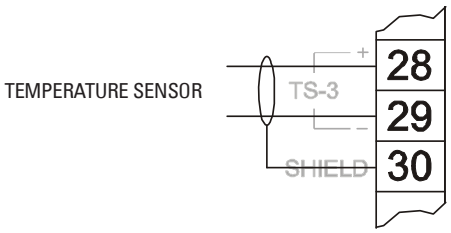

Note

Use a T-S3 Temperature Sensor only. Leave terminals open (unused) if TS-3 is not deployed.

mA Input [MR 200 only]

For more information, consult the Transducer (P004) and mA Input Parameters (P250, P251, and P252) in the parameter reference section.

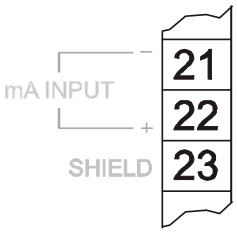

mA Output

For more information, consult the mA output parameters (P200 to P219) in the parameter reference section.

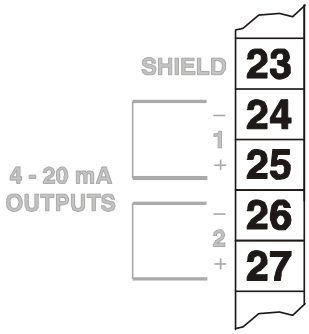

Wiring

Level System Synchronization

Note: The MultiRanger 100/200 CANNOT be synchronized with the MultiRanger Plus or the HydroRanger.

When using multiple ultrasonic level monitors, be sure to run the transducer cables in separate grounded metal conduits.

When separate conduits are not possible, synchronize the level monitors so that no unit transmits while another is waiting for echo reception.

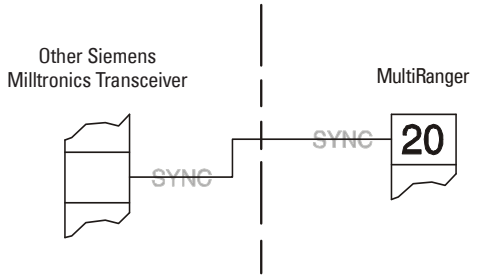

Synchronizing with another MultiRanger 100/200, or other Siemens Milltronics instruments (DPL+, SPL, XPL+, LU01, LU02, LU10, LUC500, Hydro+, EnviroRanger, MiniRanger):

- Mount the level monitors together in one cabinet
- Use a common power (mains) supply and ground (earth) for all units
- Interconnect the SYNC terminals of all level monitors
- Set parameter *P726 Level System Sync* on page 190.
- Contact Siemens Milltronics or your local distributor. Go to www.siemens.com/processautomation.

Power

Important!

Before applying power to the MultiRanger for the first time, ensure any connected alarm/control equipment is disabled until satisfactory system operation and performance is verified.

Notes for AC power connections

- The equipment must be protected by a 15 A fuse, or circuit breaker in the building installation.
- A circuit breaker or switch in the building installation, marked as the disconnect switch, must be in close proximity to the equipment and within easy reach of the operator.

Note: Make sure unit is connected to a reliable ground.

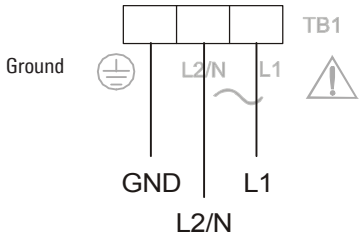

Digital Communications

Wiring the MultiRanger for communications allows it to be integrated into a full SCADA system or an industrial LAN.

The MultiRanger can also be directly connected to a computer running Dolphin Plus.

RS-232 Serial Connection

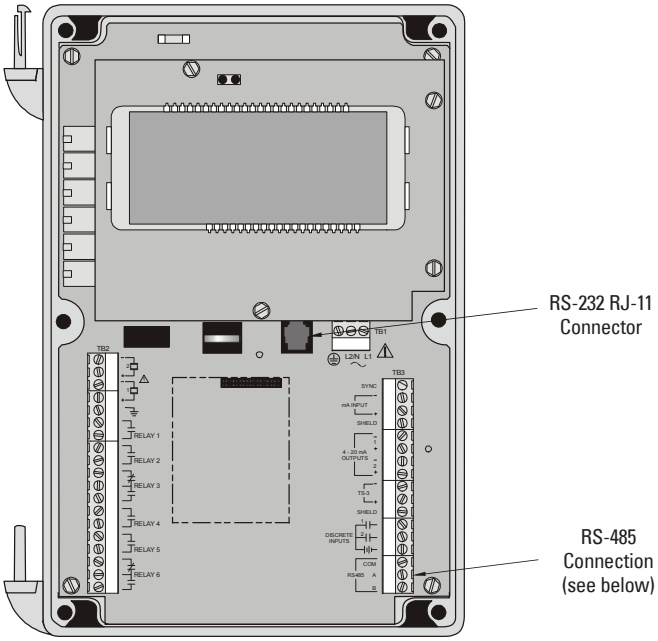

RS-485 Serial Connection

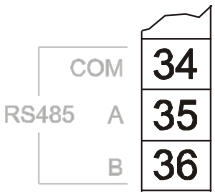

Wiring

Discrete Inputs

Discrete inputs have a positive and negative terminal. Requires an external power supply.

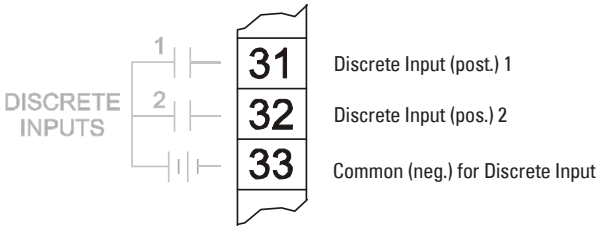

Operating the MultiRanger

The MultiRanger has two modes of operation: **RUN** and **PROGRAM**.

RUN Mode

In RUN mode, the MultiRanger detects material level and provides control functions. The MultiRanger automatically starts in RUN mode when power is applied.

System status is shown on the unit's LCD, or on a remote communications terminal.

Display

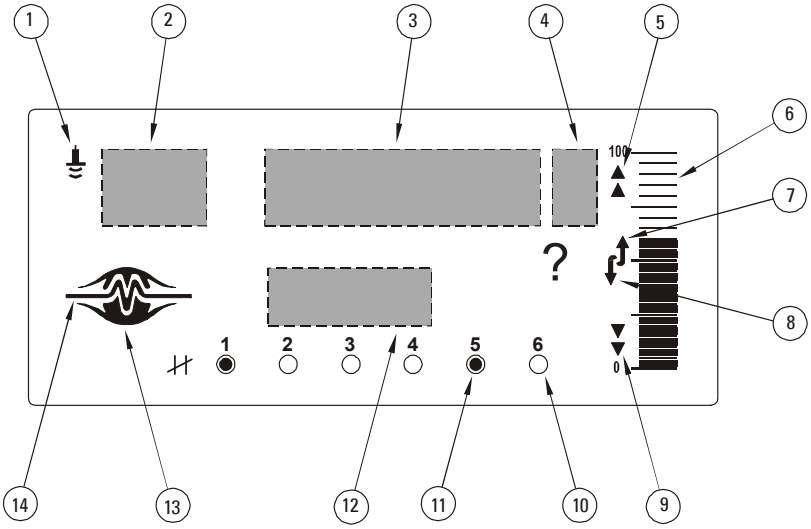

Indicator Functions

	RUN Mode	PROGRAM Mode
1	index type (see below)	index type (see next table)
2	index	index
3	primary reading	parameter value
4	units	units
5	hi and hi hi alarm designation	auxiliary function
6	level display	n/a
7	filling display	scroll access tag
8	emptying display	scroll access tag
9	lo and lo lo alarm designation	n/a
10	relay # programmed	relay # programmed
11	relay # activated	relay # activated
12	auxiliary reading	parameter number
13	normal operation:	n/a
14	failsafe operation:	n/a

Icons indicating index type (Item 1) edited in PROGRAM mode:

Icon	Index Type
	measurement point or transducer
	relay
	secondary index
mA	mA input or output

Readings in RUN Mode

Change the displayed values with the keys on the hand programmer. All readings are shown in the Auxiliary field, except for the totalizer and P920.

Key	Function	P#
%	Toggle Readings between percent and units: • Level: 0 – 100% • Space or Distance:[1] 100% – 0	P920
2 + 1 2 3 4 5 mA 6	Accumulated pump running hours[2] for numbered pump.	P310
2 + 1 2 3 4 5 mA 6	Hold number key for five seconds to display the number of accumulated pump starts[2] for numbered pump.	P311
1 [MR 200 only]	Eight-digit totalizer, uses index and reading areas, press again to toggle, P737 sets default. Used for OCM and Pumped Volume.	P322 P323 P920
3 [MR200 only]	Head measurement	P926
4 [MR 200 only]	Instantaneous flow based on head (OCM)	P925
5 mA	mA Output value	P203
6	Temperature	P664
7	Rate of level change	P707
8	Failsafe Time Left (in %). When the Reading is updated, this value (Auxiliary Reading) resets to 100 and begins to decrease until the next valid measurement is made. If the Failsafe Time Left reaches 0, **LOE** flashes in the display.	
8	Hold for four seconds to show echo confidence	P805
P--- + ###	Display the value of the entered parameter which is global or indexed by transducer	
Pxxx	Auxiliary reading displays parameter specified in P731	P731
	Distance	P923

1. Distances less than 0.3 m (1 ft) from the transducer face cannot be measured reliably. Therefore, a 0% reading is not possible during **Distance** operation.
2. If the associated relay is programmed for pump control.

Status Parameters

Status parameters give the operating status of the MultiRanger. You can access parameters with the hand programmer (see page 32) or with Dolphin Plus (see page 27). Remote SCADA system access is also possible.

Parameter		Values
P203	mA Output Value	0 to 22 – Current mA output
P254 [MR 200 only]	Scaled mA Input Value	0 to 9999 – Current mA input after scaling
P275	Scaled Discrete Input Value	Shows current value of discrete input, values vary by DI function
P322 [MR 200 only]	LCD Total Low	The last four digits of the totalizer
P323 [MR 200 only]	LCD Total High	The first four digits of the totalizer
P341	Run Time	The number of days the MultiRanger has been operating
P342	Start Ups	The number of times power has been cycled
P664	Temperature	Current temperature measured by transducer
P707	Rate Value	Current rate of material level change
P708 [MR 200 only]	Volume Rate Display	Current rate of material volume change
P729	Scan Time	Seconds since last level scan
P806	Echo Strength	Strength of primary echo
P920	Reading Measurement	Current primary reading
P921	Material Measurement	Current level from P007–Span
P922	Space Measurement	Empty space above the material level
P924 [MR 200 only]	Volume Measurement	Current volume value, if programmed
P925 [MR 200 only]	Flow Measurement (OCM)	Current flow value, if OCM programmed
P926 [MR 200 only]	Head Measurement (OCM)	Current level, if OCM programmed
P927	Distance Measurement	Distance from transducer face to material

Controlling the Display

RUN mode provides numerous parameters and variables that you can track on the display (see *Display* on page 22).

The LCD displays **EEEE** if a value is too long.

Adjusting the primary reading for four-digit LCD readout:

Parameter		Action
P060	Decimal Position	Sets maximum number of decimals
P061	Convert Reading	Scales the reading to fit
P062	Offset Reading	Shifts the reading up or down by a fixed amount

Example

To reference the displayed level to sea level, enter the distance in Units (P005), between Empty (P006) and sea level. (Enter a negative value if Empty is below sea level.)

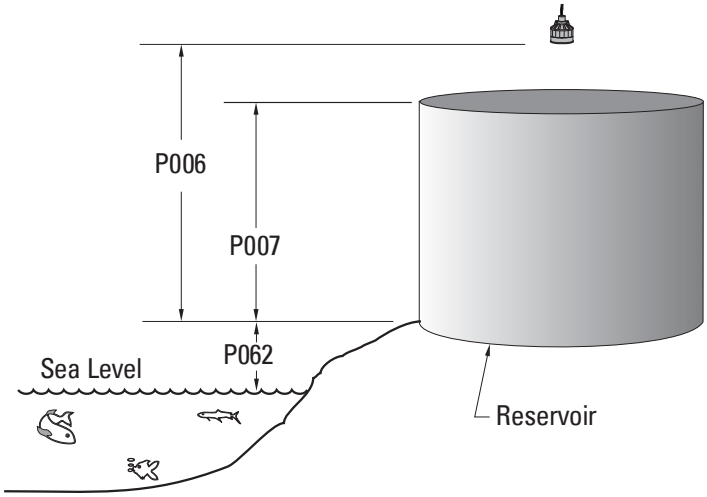

P062 is the distance between sea level and Empty.

Auxiliary Reading

The Auxiliary Reading area of the LCD displays parameter values while leaving the primary reading on screen.

Note: The parameters shown in the auxiliary reading field are indexed as follows:

- global
- by transducer
- by level

Setting the Default Auxiliary Reading

To maintain a constant variable display in the auxiliary reading area, set the default.

Example:

To leave the level reading on the screen and view the echo confidence in the auxiliary reading field, set the following parameter:

Parameter	Index	Value	Description
P730	G	805	Auxiliary field defaults to P805

Setting a Specific Auxiliary Reading

To display a second auxiliary reading, press Pxxx in RUN mode.

Example: To set Pxxx to display current temperature, go to P731:

Parameter	Index	Value	Description
P731	G	912	Shows P912–Transducer Temperature

Multiple Readings [MR 200 only]

During **differential** or **average** operation (P001 = 4 /5), the display scrolls sequentially through Point Numbers 1, 2, and 3. Point 3 is the difference between (or average of) Points 1 and 2.

Changing Number Scrolling Speed

Parameter	Index	Value	Description
P732	G	5	Hold each value for 5 seconds

See *Parameter Indexing* on page 37. All the instructions in the following procedures apply to the hand programmer and assume that the MultiRanger is activated.

PROGRAM Mode

The MultiRanger is programmed by setting its parameters to match your specific application. Most parameters are indexed, allowing you to set the parameter to specific conditions and to more than one input or output. When the MultiRanger is in PROGRAM mode, you can change these parameter values and set operating conditions.

Please refer to the *Parameter Reference* section on page 117 for a full listing and explanations of parameter values.

The MultiRanger's primary programming is by the hand programmer. Other access is available through Dolphin Plus software (purchased separately).

Notes

- To activate PROGRAM from RUN mode, press PROGRAM and then DISPLAY
- The display briefly reads **----** while the measurement reading is verified. Reading level and other data is displayed and programmed relays are operated.
- Placing a programmed unit that is in normal operation into PROGRAM mode de-energizes all control relay outputs. Be sure to bypass the MultiRanger while programming it.

Starting PROGRAM Mode

Hand Programmer

The hand programmer gives you direct access to the MultiRanger.

Aim the hand programmer and press PROGRAM key.

Notes:

- The battery in the programmer is not replacable.
- The hand programmer is ordered separately from Siemens Milltronics

For your convenience, the programmer has a magnetic mounting strip on the back. Keep programmer nearby for easy access.

Point the programmer at the IR port above the display and press the keys.

Unless otherwise noted, each valid key press should produce a change in the LCD. Verify when programming the unit.

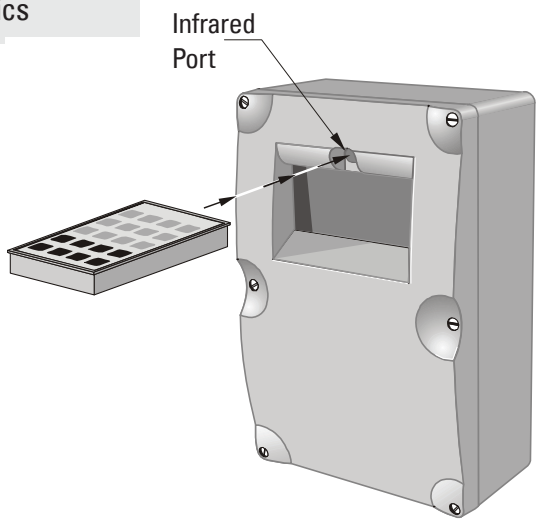

Programmer Keys

Keys	Programming Mode	Run Mode
1	1	8-digit Totalizer (toggle) [MR 200 only]
2	2	Pump Running Time
3	3	Head [MR 200 only]
4	4	Flow based on Head [MR 200]
5 mA	5	mA Output
6	6	Temperature
7	7	Rate of Change
8	8	Failsafe Time Left
9	9	N/A
0	0	N/A
P	Decimal Point (TVT left)	Parameter Value
– Pxxx	Negative Value (TVT right)	Material Level (P731)
	Fire Transducer	Distance
	Run Mode	Program Mode (Key 1)
%	Units or %	Units or % (Program Mode) (Key 2)
	Next Display Field	Pause Display Toggle
	Increase Value	Next Index
	Decrease Value	Previous Index
	Enter Value	
C	Clear to Preset	

Dolphin Plus

(compatible with product software versions 1.06 and earlier)[1]

Use Dolphin Plus software to configure, monitor, tune, and diagnose the MultiRanger from a PC or directly in the field with a laptop.

Dolphin Plus is easy to install and easy to use. Just load the software from the CD onto a desktop PC or Laptop and then set up or modify complete parameter configurations in a Windows® [2]environment.

After configuration, you can edit parameters, upload and download parameter sets to and from disk, and use parameter sets saved from other instruments. You can also work with echo profiles for fine tuning without the need for special instruments. Built-in Quick Start features and Help files guide you through the entire process.

Note: Dolphin Plus is ordered separately from Siemens Milltronics.

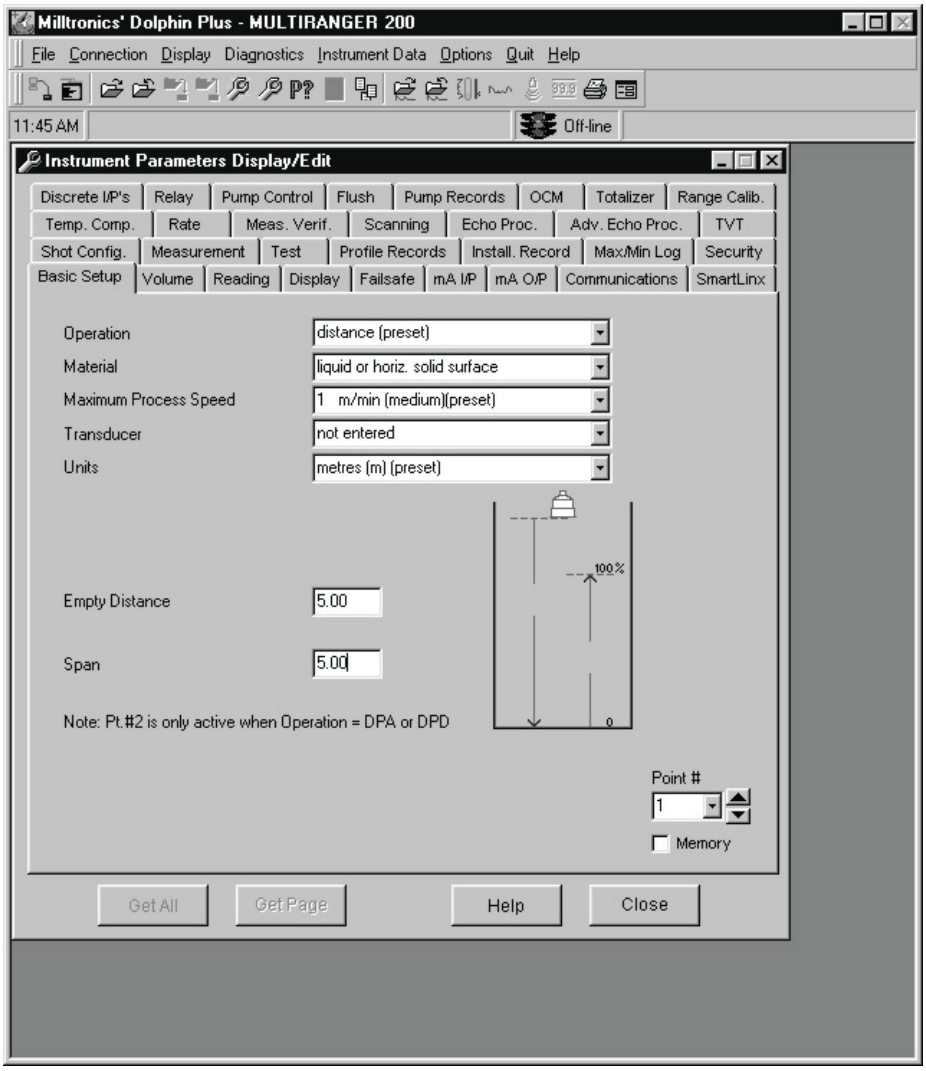

1. See P900 for Software Revision Number.
2. Windows is a registered trademark of Microsoft Corporation.

Dolphin Plus Toolbar Buttons

The toolbar buttons provide quick access to Dolphin Plus features.

Button	Action
	communicate with instrument–toggle online versus offline
	monitor communications
	send parameter set to instrument
	save parameter set to file
	open the quick start wizard
	open the tabbed parameters window
	find a parameter in the tabbed parameters window
	toggle PROGRAM mode and RUN mode
	open the reporting windows
	load an echo profile from a file
	save the current echo profile to a file
	open the vertical echo profile and tank mimic window
	open the horizontal echo profile window
	take a measurement with the current transducer
	open the reading values (distance measurement) window
	print current echo profile
	open the Echo Info Editor window

SIMATIC Process Device Manager (PDM)

(compatible with product software versions 1.07 and later)[1]

SIMATIC PDM is a software package for parameterizing, commissioning, diagnosing and maintaining process devices. For the MultiRanger 100/200, SIMATIC PDM connects directly to the device using Modbus over Port 1 or Port 2.
The MultiRanger 100/200 comes with Port 1 set for communications to SIMATIC PDM.

SIMATIC PDM contains a simple process monitor of the process values, alarms and status signals of the device. Using SIMATIC PDM you can

- display,
- set,
- change,
- compare,
- check the plausibility of,
- manage, and
- simulate

process device data.

More information about SIMATIC PDM is available at www.siemens.com/processinstrumentation: go to Products & Solutions > Products & Systems > Communication and Software > Process Device Manager. Please consult the operating instructions or online help for details on using SIMATIC PDM. An Application Guide on using MultiRanger 100/200 with PDM and Modbus is available on our website: www.siemens.com/processautomation.

Device Description

To use Process Device Manager (PDM) with MultiRanger 100/200, you need the Device Description for MultiRanger 100/200, which will be included with new versions of PDM. You can locate the Device Description in **Device Catalog**, under **Sensors/Level/ Echo/ Siemens Milltronics**. If you do not see MultiRanger 100/200 under Siemens Milltronics, you can download it from our website: www.siemens.com/processautomation. Go to the MultiRanger product page and click Downloads. After downloading the DD file, you need to execute DeviceInstall.

1. See P900 for Software Revision Number.

Activating the MultiRanger

All the instructions in the following procedures apply to the hand programmer and assume that the MultiRanger is activated.

1. Power the MultiRanger.
2. Point the programmer at the unit and press PROGRAM.
3. Press DISPLAY.

Note: Power up display

- Single Point Model
  - preset to display distance from the face of the transducer to the material
  - transducer selection is preset for the XPS-10
  - empty distance is preset to 5 m
- Dual Point Model
  - starts in an OFF state and does not take level measurements
  - to set up measurement, the quick start parameters must be configured
  - See Quick Start parameters on page 119

Changing Parameters

Note: If Parameter Value alteration is not permitted, access the Lock parameter (P000) and enter the security code, (see Security below).

1. Starting in RUN mode, press PROGRAM and then press DISPLAY to put the unit into PROGRAM mode.
2. Press DISPLAY to select the Parameter Number field.
3. Enter the Parameter Number (e.g. 110). After the third digit is entered, the parameter value is shown.
4. Enter the new value, and press ENTER. The MultiRanger interprets the value, either accepting or replacing it with a valid value.

Helpful Hints

- For parameters P001 to P009, press a single digit (1–9) and then press DISPLAY to show that parameter.
- The **?** icon indicates that the MultiRanger has accepted the value but that it conflicts with other values entered. Double-check your programming.
- By default, the SCROLL arrows show only the Quick Start parameters and any that have been changed.
- P733 sets all parameters to be scroll-accessed.

Security

The Lock parameter P000 secures the MultiRanger against parameter changes via the handheld programmer. The unit can still be put into PROGRAM mode when locked, and parameter values can be viewed, but no parameter values can be changed.

When P000 is set to **1954**, programming is enabled. To disable programming, enter another value.

P000 (1954) is a fixed value password. Therefore, you should use other means to secure the MultiRanger if security is a concern.

Simulation

P000 Lock also controls how simulations affect control relays. By default, control relays are unaffected by simulation levels. But if P000 is set to –**1**, they react to the simulated level. See *Parameters P925–P927* on page 220 for running a simulation.

Using Units or Percent (%)

Many parameters can be viewed either in measurement units (P005) or as a percentage. View the parameter and then press MODE [%] to toggle between units and percentage. The LCD shows the selected measurement type, either units (m, ft) or percentage (%).

MR 200 only:

Percentage is also available when showing flow and volume with 100%, based on the parameter that defines the maximum.

Measurement	Maximum
Volume	P051
Flow	P604

Parameters Types

View Only Parameters

Parameter values indicating status only. They cannot be altered.

Global Values

Parameter values common to all inputs and outputs on the MultiRanger.

When a global parameter is accessed, the index display automatically disappears. When a non-global parameter is accessed, the index display reappears showing the last index number.

Default Values

Parameter default values are indicated with an * in the parameter tables.

P000 Lock

Primary Index	Global		
Value	1954	*	OFF: programming permitted
	-1		Simulation Controls (relays energize based on simulated level)
	other		ON: Lock activated and programming not permitted via the handheld programmer

The asterix identifies **1954** as the default value.

Parameter Reset

Returning a parameter to factory default.

1. Display the appropriate parameter number.
2. Display the appropriate index value (if required).
3. Press CLEAR [c].
4. Press ENTER [↵].

Master Reset (P999)

Returns all parameters to original values.

Use Conditions:

- before initial system installation
- following a software upgrade

If complete reprogramming is required, use Dolphin Plus to store and retrieve parameters.

When the dual point option is enabled, P999 is indexed by transducer. Use index **00** to reset the entire MultiRanger.

Display Readout

The following readouts are shown when the MultiRanger cannot display a number.

Display	Definition
- - - -	Parameter has not been set
	All values not same when viewing index **0**
EEEE	Value too large for four-digit display

Changing Parameters(Dolphin Plus)

The other method for changing parameter values is with Dolphin Plus software. It lets you access the MultiRanger from a PC or on site with a laptop and change MultiRanger parameters.

Most examples in this manual use the icons from the hand programmer but nearly all functions are also available through Dolphin Plus.

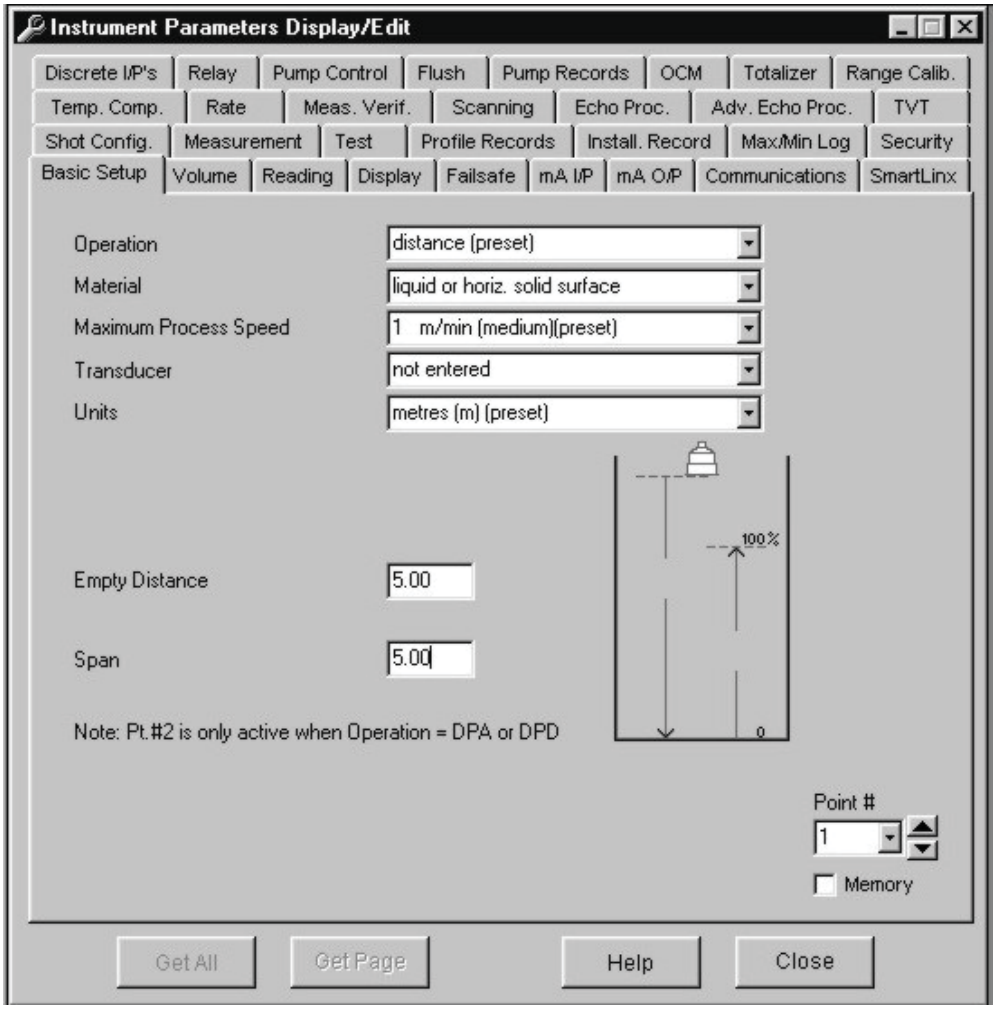

Parameter Indexing

Parameters are indexed when they apply to more than one input or output. The index value defines the input/output for that parameter. Indexed parameters contain a value for each index, even if that index is not used.

MultiRanger Display

The index number and the index values are displayed above the parameter indicator on the LCD.

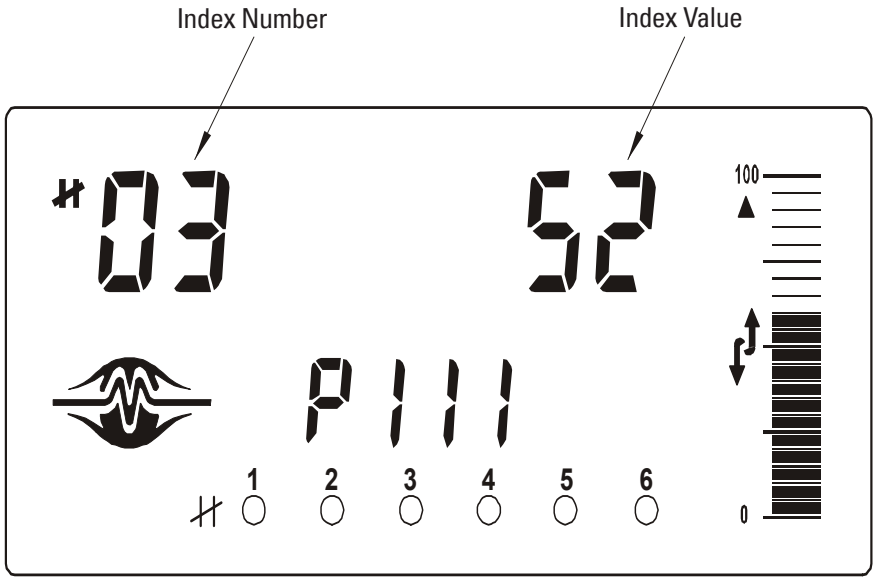

Notes

- Transducers are always indexed when the dual point option is enabled.
- An indexed transducer is commonly referred to as a Point (short for 'Measurement Point'). **Point Number** refers to indexed transducers.
- To set all indexed values for a parameter to the same value, use index **0**.
- **MR 200 only:** Transducer parameters are indexed only if Operation (P001) is set to **Difference** (value=4) or **Average** (value=5) on a single point MultiRanger.

Accessing a Parameter Index

1. Press DISPLAY once to clear current parameter field.
2. Enter the new parameter number.
3. Press DISPLAY twice.
4. Press the number of the required index. Or press ARROW keys ▲ ▼ to scroll through the available values.

Note: For optimum performance, set values accurately for indexed parameters. Ensure that the correct index value is being changed for each parameter value.

Primary and Secondary Indexes

Primary Index: relates to direct input or output and can refer to relays, communications ports, and other parameters. In parameters that allow secondary indexes, the primary index is often referred to as a **point**.

Secondary Index: relates to previously indexed parameters where the parameter requires a second index, permitting multiple values on an indexed input or output.

Primary Index

Example Setting: P111[3] = 52

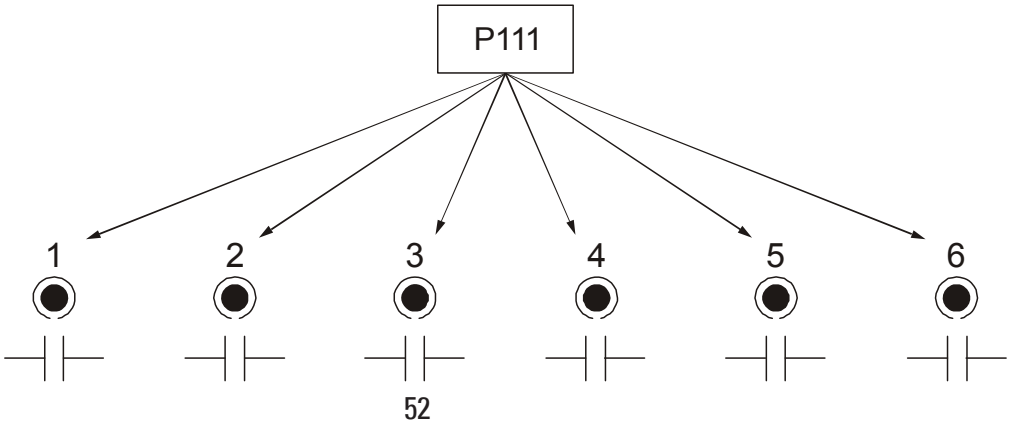

- P111 sets the Relay Control Function
- P111(3) = 52 sets Relay #**3** to a value of **52**.

Secondary Index

Parameters with a secondary index permit multiple values for a primary index (point). For example, a volume calculation based on vessel characterization breakpoints requires a distinct set of breakpoints for each measured point.

Thus the primary index refers to the measurement point, and each secondary index refers to a characterization breakpoint value.

Accessing a Secondary Index

1. Press MODE and then press DISPLAY to activate secondary index. The → icon appears under the index field.
2. Enter the secondary index, and then enter the values to set the secondary index.

Example [MR 200 only]

P054 provides up to 32 breakpoint levels used with P055 (Volume Breakpoint) for universal volume calculation. The illustration indicates how you can set secondary indexes to specific functions.

A	B	C
P054 [1,6] = 2m	P054 [1,3] = 1.5m	P054 [1,1] = .75m
P054 [2,6] = 8m	P054 [2,3] = 5.5m	P054 [2,1] = 2.75m

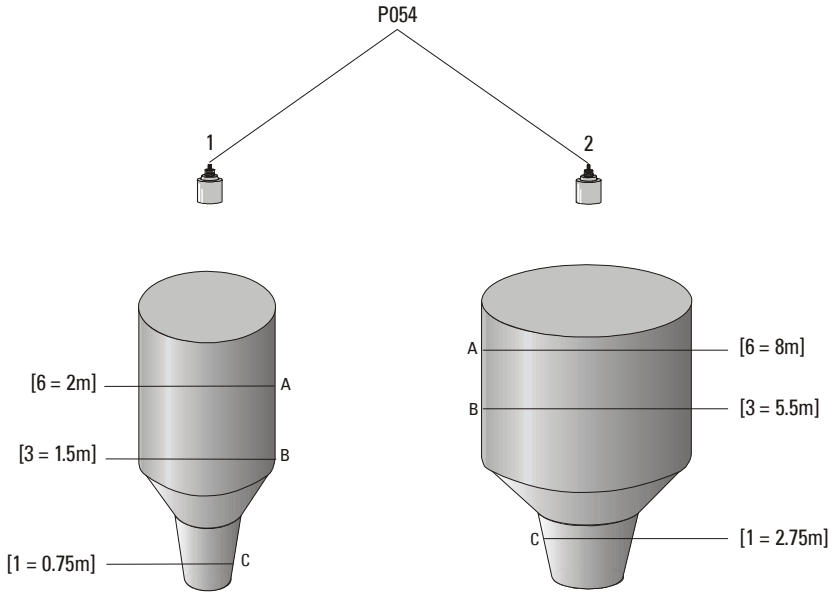

- *P054 [1,1] = .75m* sets breakpoint **1** on transducer **1** to **.75m.**
- *P054 [2,1] = 8m* sets breakpoint **1** on transducer **2** to **2.75m**.

Starting Measurement

The MultiRanger startup varies between single and dual point models.

> **Note:** The number of points is an order option and is set by the factory. On a single point model, the index for P001 is global (G). On a dual point model the index for P001 is 1 or 2. To check the model in use, enter P001 on handheld programmer. For a single point device, parameter P001 will not show an entry for index number on the LCD. (See *MultiRanger Display* **on page 36** for location of index number on the LCD.) Parameter P001 will display an index number for a dual point model.

Single Point Models

The MultiRanger starts in DISTANCE mode with the transducer preset for the XPS-10 and an empty distance of 5 meters. Change the following parameters to reflect your application parameters.

Parameter	Index	Value	Description
P001	G	1	Operation = level
P002	G	1	Material = liquid
P003	G	2	Maximum Process Speed = medium
P004	G	104	Transducer = XPS-15
P005	G	1	Units = meters
P006	G	12	Empty = 12m
P007	G	10	Span = 10m

Average or Differential [MR 200 only]

For differential or average operation with a single-point MultiRanger, set P001 to **4** (differential) or **5** (average) and connect two transducers of the same type. All of the relevant parameters then become indexed by the correct transducer:

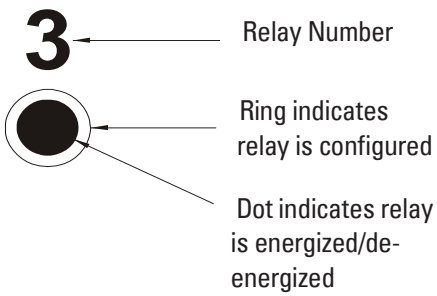

Index	Description
2	indexed by Transducer One or Two
3	indexed by level measurement 1 = Transducer One 2 = Transducer Two 3 = Calculated Level (average or difference)

Dual Point Models

The MultiRanger starts in an OFF state and does not take level measurements. For measurement setup, configure these basic parameters:

If the application uses two measurement points, provide the basic information for each measurement point separately:

Parameter	Index	Value	Description
P001	1	1	Operation = level
	2	3	Operation = distance
P002	1	1	Material = Liquid
	2	1	
P003	1	2	Max. Process Speed = medium
	2	3	Max. Process Speed = fast
P004	1	104	Transducer = XPS - 15
	2	102	Transducer = XPS - 10
P005	G	1	Units = meters
P006	1	12	Empty = 12m
	2	4	Empty = 4m
P007	1	11	Span = 11m
	2	3.5	Span = 3.5m

Average or Differential [MR 200 only]

For differential or average operation dual-point MultiRanger, set P001 to **4** (differential) or **5** (average) and connect two transducers of the same type.

All the relevant parameters are then indexed by the correct number:

Index	Description
2	indexed by Transducer One or Two
3	indexed by level measurement 1 = Transducer One 2 = Transducer Two 3 = Calculated Level (average or difference)

Measurement Conditions

The following information will help you configure your MultiRanger for optimal performance and reliability.

Response Rate

The response rate of the device influences the measurement reliability. Use the slowest rate possible with the application requirements.

The response rate is also important to functions connected to the filling or emptying indicators.

Dimensions [MR 200 only]

The dimensions of the vessel, wet well, or reservoir (except empty and span) are only important if you require volume.

Volume is required to report the level value in terms of volume. The pumped volume function can also report pumped volume or pump efficiencies.

Failsafe

The failsafe parameters ensure that the devices controlled by the MultiRanger default to an appropriate state when a valid level reading is not available.

- P070 – Failsafe Timer activates if an error condition is detected. Upon expiration of the timer, relay status defaults to values based on P071.
- P071 – Failsafe Material Level determines the level reading if the Failsafe Timer expires and the unit is still in an error condition.
- P129 – Relay Failsafe controls the reaction of each relay. See *Relay Failsafe* on page 45 for more information.

If Failsafe Operation activates frequently, see the *Troubleshooting Appendix* on page 231.

Relays

Relays are the primary controls of external devices such as pumps or alarms.

The MultiRanger comes with extensive control and alarm functions.

General Introduction

Depending on the model, up to six onboard multi-purpose relays are provided on the MultiRanger. Each relay may be independently assigned to one function and has a corresponding status icon on the LCD.

The relay functions fall under three modes of operation:

Mode	Function
alarm	alarm ON = LCD Icon ON = relay coil de-energized
pump	pump ON = LCD Icon ON = relay coil energized
miscellaneous	contact closed = LCD Icon ON = relay coil energized

Relay Function

Note: The MultiRanger 100 or 200 can be programmed with relays. The number of relays installed depends on the model. To determine the number of available relays that can be utilized in your MultiRanger 100 or 200, open the lid and count the large white relays to the left of the display. It is important to count the number of on-board relays as the software will allow programming of up to six relays whether they are installed or not.

Alarm

Level

In high alarm, the function goes on when the level rises to the ON setpoint and goes off when the level lowers to the OFF setpoint. In low alarm, the function goes on when the level lowers to the ON setpoint and goes off when the level rises to the OFF setpoint.

In Bounds [MR 200]

The relay will be in alarm if the level is inside the zone between the setpoints.

Out of Bounds [MR 200]

The relay will be in alarm if the level is outside the zone between the setpoints.

Rate of Change [MR 200]

In filling alarm, the function goes on when the rate of filling increases to the ON setpoint and goes off when the rate of filling drops to the OFF setpoint. In emptying alarm, the function goes on when the rate of emptying increases to the ON setpoint and goes OFF when the rate of emptying drops to the OFF setpoint. For emptying alarm, the setpoints must be entered as negative values.

Temperature [MR 200]

In high alarm, the function goes on when the temperature rises to the ON setpoint and goes off when the temperature lowers to the OFF setpoint. In low alarm, the function goes on when the temperature lowers to the ON setpoint and goes off when the temperature rises to the OFF setpoint.

Loss of Echo

The function goes on when the fail-safe timer expires. The function goes OFF when a valid echo is received (fail-safe timer is reset).

Pump

Level

In pump down, the function goes on when the level rises to the ON setpoint and goes off when the level lowers to the OFF setpoint. In pump up, the function goes on when the level lowers to the ON setpoint and goes off when the level rises to the OFF setpoint.

Miscellaneous

Totalizer and Samplers [MR 200]

Refer to *Totalizing Pumped Volume* on page 65. Relays are normally de-energized, contact closure is approximately 200 mSec duration.

Setpoint - ON / OFF

If the ON setpoint is higher than the OFF setpoint, the relay operates as:

- high alarm
- pump down control

If the ON setpoint is lower than the OFF setpoint, the relay operates as:

- low alarm
- pump up control

The ON and OFF setpoints can not be the same on an individual relay but may be common to other relays. The dead band or hysteresis is the difference between the ON and OFF setpoints. For in and out of bounds level alarms, the hysteresis is set at ± 2 % of span from either boundary.

Relay Status – Non Run Modes

When the fail-safe timer expires, pump control relays respond as previously described. However, alarm relays will respond in the following manner:

Fail-Safe Mode	Relay Status	
	High Alarm	Low Alarm
Fail-Safe High	ON	OFF
Fail-Safe Low	OFF	ON
Fail- Safe Hold	HOLD	HOLD

Upon entering the program mode, all pump control relays will be turned OFF. Alarm relays will hold their prior status.

Cautions:

- If the relay status can affect plant operation or personnel safety, it is advisable to override the relay functions or disconnect the relay wiring during calibration or simulation.
- Keep power disconnected at main breaker when MultiRanger cover is opened.

Relay States

The relays on the MultiRanger are completely programmable, allowing for any control scheme.

Relay Types
Relay 1,2,4,5 – NO (Form A)
Relay 3,6 – NO / NC (Form C)

Relay Related Parameters

Some parameters affect how relays react during normal conditions:

P100–Preset Applications [MR 200 only]

Sets the MultiRanger to a preset application. These preset applications quickly set up the MultiRanger with a minimum number of parameters.

P111–Relay Control Function

Sets the default state differently, depending on whether the relay is programmed as an alarm or a control.

P111–Alarm Functions

The alarm function de-energizes the relay coils. During normal operation (no alarms), the relay coils are energized.

P111–Control Functions

The control function energizes the relay coils. When the instrument is at rest (no controls operating) the relay coils are de- energized.

P112–Relay ON Setpoint

Sets the process point at which the relay is tripped.

P113–Relay OFF Setpoint

Sets the process point at which the relay is reset.

P118–Relay Output Logic

Affects relay reaction. Reverses the logic (normally-open to normally-closed or vice versa).

P129–Relay Failsafe

Changes how individual relays react to a failsafe condition on the instrument.

Relay Wiring Test

P119–Relay Logic Test

Checks the application wiring by forcing a relay control function, such as a level alarm or pump control setpoint. Ensure all the relay programming and wiring works properly.

Please verify that **ON** and **OFF** respond correctly. Use P119 as a final test once all of the relay programming is done.

Relay Activation

The flexibility of the relay functions ensures that the MultiRanger can support relay wiring for different systems and applications. Use the following as a guide to the most common parameters.

Relay Setpoints and Functionality

[MR 100]: When a setpoint is reached, the corresponding action is taken. The setpoint can be an ON or OFF setpoint related to a process variable.

[MR 200]: The setpoint can be an ON or OFF setpoint related to a process variable, or a timed setpoint based on interval and duration.

[MR 100]: Functions affected by setpoint are configured by parameters that determine the application requirements such as timing. *P111 Pump and Control functions* (see page 134) sets the functions requirements.

[MR 200]: Functions affected by setpoint are configured by parameters that determine the application requirements such as timing. *P111 Pump and Control functions* (see page 134 sets the function requirements. Other function parameters:

- P132–Pump Start Delay
- P133–Pump Power Resumption Delay
- P645–Relay Duration

Relay Logic is Modified

Normal operating conditions means that alarms are off and pumps are on. This can be reversed using P118–Relay Output Logic.

Relay Failsafe

P129–Relay Failsafe

Adjusts how individual relays react to a failsafe condition. Relays can be set to:

- OFF Control is by P071–Failsafe Material Level
- HOLd Keeps the relay in the current state
- dE De-energizes the relay (default for pump controls)
- En Energizes the relay

Preset Applications

Preset applications set up the relay parameters to predetermined values shown below:

Value	#	Parameters Affected						
Off	0	All relays set to **OFF**						
Wet Well 1	1	Pump down with the following settings:						
		Parameter	Relay #					
			1	2	3	4	5	6
		P111	52	52	1(H)	1(L)	0	0
		P112	70%	80%	90%	10%	–	–
		P113	20%	20%	85%	15%	–	–
Wet Well 2	2	Pump down with the following level and rate settings:						
		Parameter	Relay #					
			1	2	3	4	5	6
		P111	52	52	1(H)	1(L)	0	0
		P112	70%	80%	90%	10%	–	–
		P113	20%	20%	85%	15%	–	–
		P121	1					
		P121 sets the pump relays to accept control by rate of level change once the first ON setpoint is reached. Because the pumps are started by rate, you must change P703 to desired empty rate.						
Reservoir 1	3	Pump up with the following level settings:						
		Parameter	Relay #					
			1	2	3	4	5	6
		P111	52	52	1(H)	1(L)	0	0
		P112	30%	20%	90%	10%	–	–
		P113	80%	80%	85%	15%	–	–
Reservoir 2	4	Pump up with the following level and rate settings:						
		Parameter	Relay #					
			1	2	3	4	5	6
		P111	52	52	1(H)	1(L)	0	0
		P112	20%	20%	90%	10%	–	–
		P113	80%	80%	85%	15%	–	–
		P121	1					
		P121 sets the pump relays to accept control by rate of level change once the first ON setpoint is reached. Because the pumps are started by rate you must change P702 to desired fill rate.						
Screen	5	Differential control of a screen or rake:						
		Parameter	Relay #					
			1	2	3	4	5	6
		P110	3	1	2	3	0	0
		P111	50	1(H)	1(L)	1(H)	–	–
		P112	80%	90%	10%	90%	–	–
		P113	20%	85%	15%	10%	–	–
Alarms	6	General alarms at four setpoints:						
		Parameter	Relay #					
			1	2	3	4	5	6
		P111	1(H)	1(L)	1(HH)	1(LL)	0	0
		P112	80%	20%	90%	10%	–	–
		P113	75%	25%	85%	15%	–	–

Backup Level Override

Backup level override provides the option of overriding the ultrasonic input with another contacting point level device, for example, the Pointek CLS200. The ultrasonic reading is fixed at the programmed switch level until the discrete input is released and the ultrasonic device makes its decisions based on the override value.

Backup Level Override Parameters

P064: Reading Override Enable

Sets the discrete input as the source of a level reading override.

P065: Reading Override Value

Substitutes value for current reading when the discrete input (P064) is enabled. Value is added in current units and is valid only for the following:

- level
- space
- distance
- difference
- average modes of operation
- head level in OCM mode

Example:

A high level backup switch is connected to Digital Input Two in the same application as Transducer One at level value 4.3 m.

Settings

Parameter	Index	Value
P064	1	2
P064	2	0
P065	1	4.3
P065	2	–

When the level rises to 4.3 m and the switch is activated, the reading is forced to 4.3 m where it stays until the switch is de-activated.

P066: Override Time Delay

Sets the time (in seconds) used to calm the override condition input.

Discrete Inputs

Wiring the Discrete Inputs

Normal state is standard operation, with the MultiRanger sensing the material level and controlling the pumps.

The discrete input contacts are either **normally-open** or **normally-closed** when the system state is normal.

Example:

Normal state for a backup high level switch is **open**, and the contacts on the discrete input are wired as **normally-open**.

See *Discrete Inputs* on page 21 for complete details on wiring the discrete inputs. To override a level using a discrete input, see *Backup Level Override* on page 47.

Programming the Discrete Input Logic

The P270 series of parameters permits control over the discrete input.

DI State	P270 Setting
Normally Open	P270 = 2
Normally Closed	P270 = 3

The current value of the discrete input is reported in P275:

P275 Setting	MultiRanger State
0	Normal State
1	Exception State

mA I/O

To integrate the MultiRanger with other equipment, use the mA input and outputs.

Note: When a mA input parameter is accessed, a mA symbol appears in the upper left corner of the LCD display.

The mA input can be used as a level measurement or can be passed on to a SCADA system.

mA Input [MR 200]

Level Reading Parameters

Parameter	Index	Value	Description
P004	1	250	Transducer = mA input 1
P250	1	2	Scale = 4 to 20 mA
P251	1	0	4 mA = 0% of span
P252	1	100	20 mA = 100% of span
P253	1	0	Do not damp the input signal

To pass the mA input on to a SCADA system, read the value from the appropriate communication registers. For more information, go to the *MultiRanger Communications* section on page 89.

mA Output

The MultiRanger has two mA outputs, used to send measurements to other devices.

Configuring the mA output to send a 4 to 20 mA signal scaled from 10% to 90% of span of the second transducer:

Parameter	Index	Value	Description
P200	1	2	set to 4 to 20 range
P201	1	1	send mA proportional to level reading
P202	1	2	base mA on level point 2
P210	1	10	set 4 mA at 10% of span[1]
P211	1	90	set 20 mA at 90% of span[2]
P219	1	0	set failsafe action as 0 mA

1. If the level reading drops below 10% of span, the mA output drops below 4 mA.
2. If the level reading rises above 90% of span, the mA output rises above 20 mA.

Calibrating 4 mA Output

1. Connect the mA receiving device to the MultiRanger.
2. Put the MultiRanger into PROGRAM mode.
3. Set P911–mA Output Value to 4.0.
4. View the mA level on the receiving device.
5. If there is a discrepancy,
   a. Attach ammeter to MultiRanger mA output.
   b. Access P214, Index 1 (for mA output 1) or 2 (for mA output 2). Press CLEAR and ENTER [c] [↵]. The ammeter should show a value near 4 mA.
   c. Enter the exact value displayed on the ammeter into P214 (Index 1 or 2).
   d. The ammeter should then read exactly 4.00 mA.

The unit is now calibrated for 4 mA for the receiving device.

Calibrating 20 mA Output

1. Connect the mA receiving device to the MultiRanger.
2. Put the MultiRanger into PROGRAM mode.
3. Set P911–mA Output Value to 20.0.
4. View the mA level on the receiving device.
5. If there is a discrepancy,
   a. Attach ammeter to MultiRanger mA output.
   b. Access P215, Index 1 (for mA output 1) or 2 (for mA output 2). Press CLEAR and ENTER [c] [↵]. The ammeter should show a value near 20 mA.
   c. Enter the exact value displayed on the ammeter into P215 (Index 1 or 2).
   d. The ammeter should then read exactly 20.00 mA.

The unit is now calibrated for 20 mA for the receiving device.

Verifying the mA Range

Checks that the external device can track the entire 4 to 20 mA range sent by the MultiRanger.

1. Use P920 to put the MultiRanger into Simulation mode (see page 85).
2. Run the simulation through one complete fill / empty cycle.
3. View P911–mA Output Value to verify that it tracks to the simulation.
4. View the mA value reported on the external equipment to verify that it also tracks to the simulation.

Volume [MR 200]

Volume is a feature of the MultiRanger 200 only. Volume is used in two situations:

1. Calculate and display volume instead of level. For programming all setpoint parameters in terms of volume units rather than level units.
2. Calculate pumped volume to accomplish the following:
   - Totalize the volume of material that is pumped out of the wet well
   - Set an alarm on pump efficiency

If you require this functionality, please contact your local Siemens Milltronics representative at www.siemens.com/processautomation .

Readings

When using volume, readings are given in arbitrary units specified in P051.

The default is 100, which gives a reading in percent of total. Use whatever units you want here. If the value is too large for the four-digit LCD, use a larger unit.

Example

If a wet well has a maximum capacity of 250,000 liters, use the value 250.0 for P051 and set the reading in 1000s of liters.

Tank Shape and Dimensions

There are many common tank shapes to select from. (See P050. If possible, use one of these.) Each tank shape uses the Empty distance (P006) in its calculations of volume.

Some tank shapes also require extra dimensions to calculate the volumes. Do not estimate these values. They must be correct to ensure the accuracy of your volume calculations.

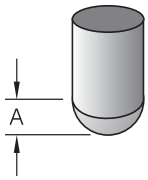

To configure volume for a tank with a half-sphere bottom, set the following:

Parameter	Index	Value	Description
P050	1	4	selects the correct tank shape
P051	1	100	sets maximum volume at 100 (percent)
P052	1	1.3	sets **A** to 1.3m

Notes:
- The default reading changes to a range from 0 to 100 (the value in P051)
- Empty (P006) is still measured to the bottom of the tank, not the top of **A**.

Characterization Chart [MR 200]

If you cannot use a pre-defined tank, then use one of the universal tank shapes and program the characterization curve.

1. Plot a volume to height chart. Usually a tank supplier will provide this chart. However, if you have a custom-built wet well then you will need access to complete drawings of the well or accurate measurements.
2. Enter the curve values from this chart into P054 and P055.
3. Ensure extra points are added around sharp transitions in the wet well volume (e.g: as steps in the well wall).

Note: The end points in the curve are 0,0 (fixed) and the point defined by P007–Span and P051–Maximum Volume.

Example Chart

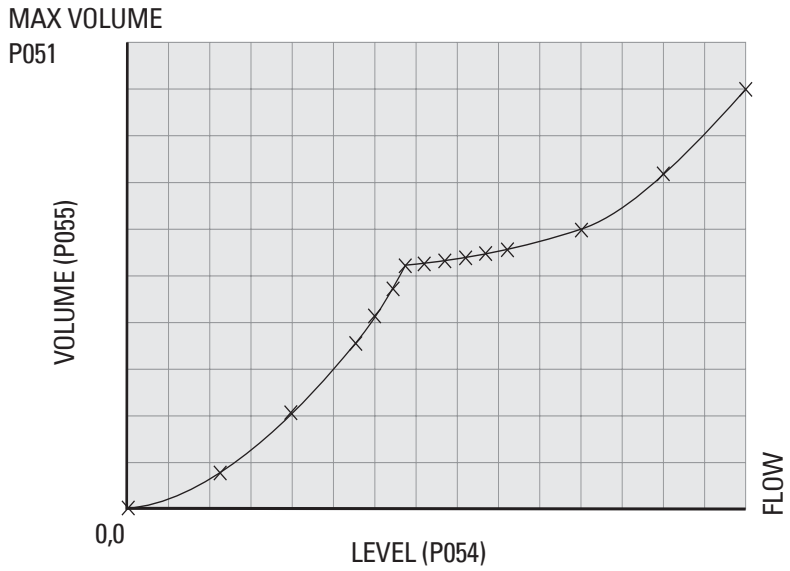

MultiRanger 200 only

Parameter	Transducer	Index	Value	Description
P054	1	1	0.0	Determines the Level breakpoints at which the volumes are known.
		2	0.8	
		3	2.0	
		4	3.5	
		5	4.1	
		6	4.7	
		7	5.1	
		8	5.2	
		9	5.3	
		10	5.4	
		11	5.5	
		12	5.6	
		13	6.0	
		14	7.2	
		15	9.0	
P055	1	1	0.0	Determines the volumes which correspond to the level breakpoints. The universal calculations interpret between the breakpoints to produce an accurate model of the volume at all level readings. Settings P050 = 9 for linear approximation P050 = 10 for curved approximation Linear approximation uses a linear algorithm; curved approximation uses a cubic spline algorithm.
		2	2.1	
		3	4.0	
		4	5.6	
		5	5.9	
		6	6.3	
		7	6.7	
		8	7.1	
		9	7.8	
		10	8.2	
		11	8.8	
		12	9.2	
		13	10.9	
		14	13.0	
		15	15.0	

Level

The level alarm is the most common. Use this alarm to warn you when your process is in danger of being upset due to high or low levels.

Generally, the four alarms used are Hi, Hi Hi, Lo, and Lo Lo.

Set the Common Parameters

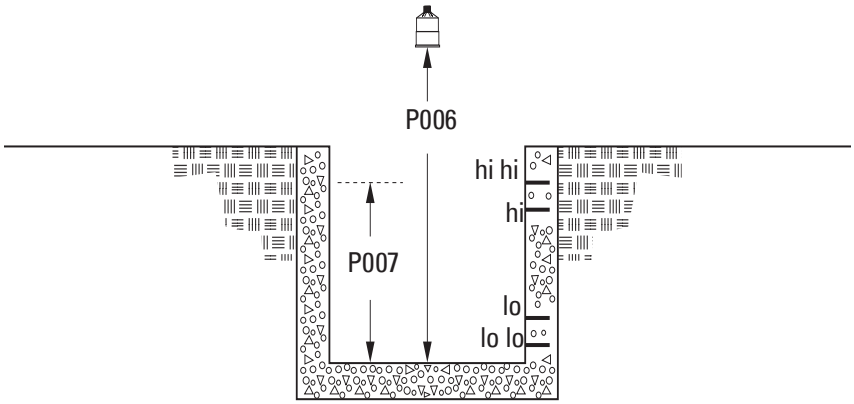

Prerequisite: You must know the details of your application and substitute the values for the sample values provided. If you are bench testing the unit, then set your test values to be the same as the sample values.

Parameter	Index[1]	Value	Description
P001	G	1	Operation = level
P002	G	1	Material = liquid
P003	G	2	Maximum Process Speed = medium
P004	G	102	Transducer = XPS-10
P005	G	1	Units = meters
P006	G	1.8	Empty = 1.8m
P007	G	1.4	Span = 1.4m

1. This example assumes a base, single measurement unit. If your unit has optional dual point software installed then some parameters are indexed by two.

Setting Simple Level Alarms

To set Relay Five to a standard level alarm (Hi Hi, Hi, Lo, Lo Lo) do the following:

Parameter	Index	Value	Description
P110	5	1	• Set P110, indexed to relay, to the value **1** for Transducer One
P111	5	1	• Set P111, indexed to relay, to the value **1** for level alarm • Press UNIT [%] to display the Auxiliary Function symbol. • Press ARROW keys [▲] [▼] as required to scroll to the alarm designation (L, LL, H, or HH). • Press ENTER [↵] to enter the value.
P112	5	1.2m	• Set the **ON** setpoint
P113	5	1.15m	• Set the **OFF** setpoint

Available designations:

Alarm	Designation
Hi Hi	HH
Hi	H
Lo	L
Lo Lo	LL

Rate [MR 200]

Rate alarms can trigger an alarm if the vessel is filling/emptying too quickly.

Setting a Filling Rate Alarm

Parameter	Index	Value	Description
P111	5	4	These settings trip the alarm when the reservoir is filling faster than 1 m per minute and reset it at 0.9m per minute.
P112	5	1m	
P113	5	0.9m	

Setting an Emptying Rate Alarm

Parameter	Index	Value	Description
P111	5	4	These settings trip the alarm when the reservoir is emptying faster than 10% of span per minute and reset the alarm when emptying falls to 5%.
P112	5	-10%	
P113	5	-5%	

In Bounds/ Out of Bounds Range [MR 200]

Use the bounded range alarms to detect when the level is inside or outside of the range. By using a bounded range alarm, you can effectively put two level alarms (high and low) on one relay.

Setting an Out of Bounds Alarm

Parameter	Index	Value
P111	5	3
P112	5	1.3
P113	5	0.3
P116	5	0.05

Results:

- Trips alarm above 1.35 m and below 0.25m
- Resets alarm below 1.25 m and above 0.35m

Setting an In Bounds Alarm

Parameter	Index	Value
P111	5	2
P112	5	1.3
P113	5	0.3
P116	5	0.05

Results:

- Trips alarm below 1.25 m and above 0.35 m
- Resets alarm above 1.35 m and below 0.25 m

Cable Fault

Activates an alarm if transducer cable circuit enters a shorted or opened state.

Parameter	Index	Value	Description
P111	5	7	Alarm on transducer cable fault
P110	5	1	Alarm on Transducer One

Temperature [MR 200]

Use the temperature alarm to activate an alarm when the temperature reaches the **ON** setpoint (P112). This alarm uses the same setpoint parameters as the level alarms (P112 and P113).

With P112 and P113, you can set a high alarm (**P112 > P113**) or a low alarm (**P112 < P113**).

This shows a high alarm:

Parameter	Index	Value	Description
P111	5	5	Alarm on temperature
P112	5	45	**ON** setpoint at 45 °C
P113	5	43	**OFF** setpoint at 43 °C
P110	5	1	Take the temperature reading from Transducer One

The temperature source can be the temperature sensor built into the transducer or an external TS-3, as set by P660.

Loss of Echo (LOE)

Parameter	Index	Value	Description
P110	5	1	Alarm on LOE for Transducer One
P111	5	6	Alarm on LOE
P070	G	0.5	Trip alarm when 0.5 minutes (30 seconds) pass without detecting a valid echo.

Setting a Pump Down Group

Example: Sewage Wet Well

Setting a group of three pumps to pump down a wet well.

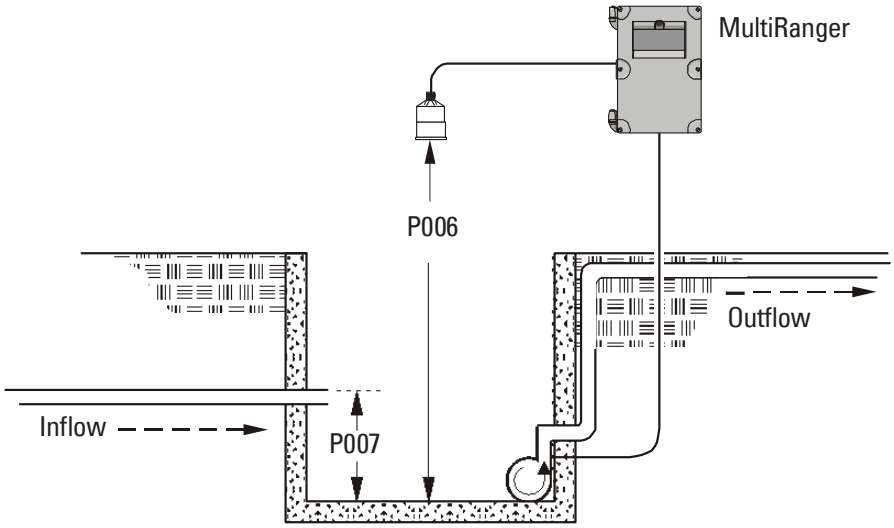

Set the Common Parameters

Prerequisite: Substitute the details of your application in place of the sample values provided. If you are bench testing the unit, set your test values to be the same as the sample values.

Parameter	Index[1]	Value	Description
P001	G	1	Operation = level
P002	G	1	Material = liquid
P003	G	2	Maximum Process Speed = medium
P004	G	102	Transducer = XPS-10
P005	G	1	Units = meters
P006	G	1.8	Empty = 1.8m
P007	G	1.4	Span = 1.4m

1. Example assumes a single measurement unit. If your MultiRanger has dual point software installed then some parameters are indexed by two.

Set Relays to ALTERNATE DUTY ASSIST

Parameter	Index	Value	Description
P111	1	52	Sets the pump relays (index 1, 2, and 3) to ALTERNATE DUTY ASSIST.
P111	2	52	
P111	3	52	

Set the ON Setpoints

Parameter	Index	Value	Description
P112	1	1.0m	Sets the three setpoints for the pump relays. The first cycle will use these setpoints. Subsequent cycles rotate the setpoints among the pumps.
P112	2	1.1m	
P112	3	1.2m	

Set the OFF Setpoints

Parameter	Index	Value	Description
P113	0	0.5m	By using index **0** all six relays are set at the same time, **including any alarm relays**. Use with caution.

Setting a Pump Up (Reservoir) Group

Sets a group of three pumps to pump up a reservoir.

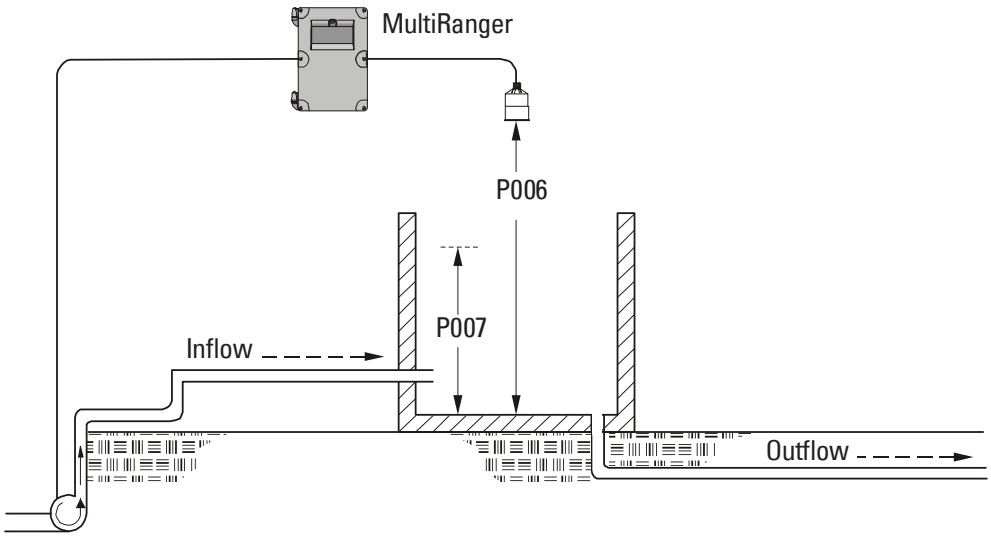

Set the Common Parameters

Prerequisite: Substitute the details of your application in place of the sample values provided. If you are bench testing the unit, set your test values to be the same as the sample values.

Parameter	Index[1]	Value	Description
P001	G	1	Operation = level
P002	G	1	Material = liquid
P003	G	2	Maximum Process Speed = medium
P004	G	102	Transducer = XPS-10
P005	G	1	Units = meters
P006	G	1.8	Empty = 1.8m
P007	G	1.4	Span = 1.4m

1. Example assumes a single measurement unit. If your MultiRanger has dual point software installed, some parameters are indexed by two.

Set Relays to ALTERNATE DUTY ASSIST

Parameter	Index	Value	Description
P111	1	52	Sets the pump relays (index 1, 2, and 3) to ALTERNATE DUTY ASSIST.
P111	2	52	
P111	3	52	

Set the Relay ON Setpoints

Parameter	Index	Value	Description
P112	1	0.4m	Sets the three setpoints for the pump relays. The first cycle will use these setpoints. Subsequent cycles rotate the setpoints among the pumps.
P112	2	0.3m	
P112	3	0.2m	

Set the Relay OFF Setpoints

Parameter	Index	Value	Description
P113	0	1.3m	By using index **0** all six relays are set at the same time, **including any alarm relays**. Use with caution.

For more information, see *Appendix D: Pump Control Reference* on page 239.

Other Pump Control Algorithms

Set Relays to ALTERNATE DUTY BACKUP [MR 200]

Parameter	Index	Value	Description
P111	1	53	Sets the pump relays (index 1, 2, and 3) to ALTERNATE DUTY BACKUP.
P111	2	53	
P111	3	53	

Set the Relay ON Setpoints [MR 200]

Parameter	Index	Value	Description
P112	1	0.4m	Sets the three setpoints for the pump relays. The first cycle will use these setpoints. Subsequent cycles rotate the setpoints among the pumps.
P112	2	0.3m	
P112	3	0.2m	

Set the Relay OFF Setpoints [MR 200]

Parameter	Index	Value	Description
P113	0	1.3m	By using index **0** all six relays are set at the same time, **including any alarm relays**. Use with caution.

Set Relays to FIXED DUTY ASSIST

Parameter	Index	Value	Description
P111	1	50	Sets the pump relays (index 1, 2, and 3) to FIXED DUTY ASSIST. Multiple pumps can run simultaneously.
P111	2	50	
P111	3	50	

Set the Relay ON Setpoints

Parameter	Index	Value	Description
P112	1	0.4m	Sets the three setpoints for the pump relays. The setpoints remain attached to the pump relays.
P112	2	0.3m	
P112	3	0.2m	

Set the Relay OFF Setpoints

Parameter	Index	Value	Description
P113	0	1.3m	By using index **0** all six relays are set at the same time, **including any alarm relays**. Use with caution.

Set Relays to FIXED DUTY BACKUP [MR 200]

Parameter	Index	Value	Description
P111	1	51	Sets the pump relays (index 1, 2, and 3) to FIXED DUTY BACKUP. Only one pump will ever run at one time.
P111	2	51	
P111	3	51	

Set the Relay ON Setpoints [MR 200]

Parameter	Index	Value	Description
P112	1	0.4m	Sets the three setpoints for the pump relays. The setpoints remain attached to the pump relays.
P112	2	0.3m	
P112	3	0.2m	

Set the Relay OFF Setpoints [MR 200]

Parameter	Index	Value	Description
P113	0	1.3m	By using index **0** all six relays are set at the same time, **including any alarm relays**. Use with caution.

Set Relays to ALTERNATE DUTY SERVICE [MR 200]

Parameter	Index	Value	Description
P111	1	54	Sets the pump relays (index 1, 2, and 3) to SERVICE RATIO DUTY ASSIST
P111	2	54	
P111	3	54	
P122	1	25	Sets the ratio to: 25% – Pump One 50% – Pump Two 25% – Pump Three
P122	2	50	
P122	3	25	

Set the Relay ON Setpoints [MR 200]

Parameter	Index	Value	Description
P112	1	0.4m	Sets the three setpoints for the pump relays. The first cycle will use these setpoints. Subsequent cycles rotate the setpoints among the pumps.
P112	2	0.3m	
P112	3	0.2m	

Set the Relay OFF Setpoints [MR 200]

Parameter	Index	Value	Description
P113	0	1.3m	By using index **0** all six relays are set at the same time, **including any alarm relays**. Use with caution.

Set Relays to FIRST IN FIRST OUT (FIFO) ASSIST [MR 200]

Parameter	Index	Value	Description
P111	1	56	Sets the pump relays (index 1, 2, and 3) to FIFO DUTY ASSIST.
P111	2	56	
P111	3	56	

Set the Relay ON Setpoints [MR 200]

Parameter	Index	Value	Description
P112	1	0.4m	Sets the three setpoints for the pump relays. The first cycle will use these setpoints. Subsequent cycles rotate the setpoints among the pumps.
P112	2	0.3m	
P112	3	0.2m	

Set the Relay OFF Setpoints [MR 200]

Parameter	Index	Value	Description
P113	0	1.3m	By using index **0** all six relays are set at the same time, **including any alarm relays**. Use with caution.

Optional Pump Controls

Starting Pumps by Rate of Level Change [MR 200]

Use this function when multiple pumps will be controlled by rate of level change rather than setpoints. Pumping costs can be reduced because only the highest ON setpoint needs to be programmed. This results in a lower difference in head to the next wet well which, in turn, results in less energy being used to pump out the well.

Parameter	Index	Value	Description
P112	1	1.35	Starting pumps by rate allows all setpoints to be set higher to save money by pumping from the highest safe level of the wet well.
P112	2	1.35	
P112	3	1.35	
P113	1	0.5m	Notice that all indexed relays for both P112 and P113 are set to the same levels.
P113	2	0.5m	
P113	3	0.5m	
P121	1	1	The pumps will start on 20 second intervals until the rate set in P703 is met.
P121	2	1	
P121	3	1	
P132	G	20.0	

When the first ON setpoint is reached, the pumps will start, one by one, until the material level rate of change is set at the same value or greater than the value in:

- P703 – Emptying Indicator (pump down applications)
- P702 – Filling Indicator (pump up applications)

Set delay between pump starts using P132 – Pump Start Delay.

Single and Dual Point [MR 200]

- Single Point Mode: one pump by rate control available that affects all pumps.
- Dual Point Mode: a single pump by rate control can be set up for each of the three available level points. Set Operation for difference or average (P001 = 4 or 5).

Notes:
- Set all pump control relay ON and OFF setpoints to the same value
- If the level is within 5% of Span (P007) of the OFF setpoint, then the next pump is not started

Rotating Pumps by Service Ratio [MR 200]

Prerequisite: Set pump relays to a service ratio value (P111 = 54 or 55).

Parameter	Index	Value	Description
P122	1	1	These values will start Pump Two 50% of the time and Pumps One and Three each 25% of the time.
P122	2	2	
P122	3	1	

Notes:
- The MultiRanger will not sacrifice other pumping strategies to ensure that the ratio is held true
- If the pump relays are set to the same value, then the ratio equals 1:1 and all pumps are used equally (preset)

When more than one pump is assigned a Pump Service Ratio value (in any time units) and a pump start is required (P112 Relay Setpoint ON), the pump with the fewest running hours (with respect to the assigned ratio values) starts.

Conversely, when a pump stop is required (113 Relay Setpoint OFF), the pump with the most running hours (as compared to the assigned ratio values) stops.

Totalizing Pumped Volume [MR 200]

Prerequisite: the volume of the vessel must be known.

Parameter	Index	Value	Description
P001	G	7	Operation = pumped volume
P002	G	1	These parameters are as shown above.
P003	G	2	
P004	G	102	
P005	G	1	
P006	G	1.8	
P007	G	1.4	
P050	G	1	Tank shape is Flat Bottom.
P051	G	17.6	Max volume is 17.6m^3 or 17,600 liters.
P111	1	52	Sets relays 1, 2, and 3 as a pump group using ALTERNATE DUTY ASSIST CONTROL.
P111	2	52	
P111	3	52	
P112	1	1.0	Sets the **ON** setpoints for the pump group.
P112	2	1.2	
P112	3	1.4	
P113	0	0.2	Sets the **OFF** setpoints for the pump group.

Set in RUN Mode

1. Press PROGRAM for RUN mode.
2. Press TOGGLE to display pumped volume on the totalizer.
3. Press AUXILIARY to display current level in the auxiliary reading area.

Setting Independent Failsafe Controls

Independent failsafe controls allow you to vary an individual relay from the global failsafe controls programmed in P070 to P072.

Example:

The global failsafe controls are set to hold and Relay Five is set to trigger an alarm bell.

Parameter	Index	Value	Description
P071	G	HOLd	Keep level at last known value.
P129	5	dE	De-energize Relay Five, and trigger alarm.

Setting a Pump to Run On [MR 200]

When you need to pump below the normal OFF setpoint, use P130 (Pump Run-On Interval) and P131 (Pump Run-On Duration) to control this event.

Example:

The pump connected to Relay Three is set to pump for an extra 60 seconds every 5 hours.

Parameter	Index	Value	Description
P130	3	5	Time in hours of run-on interval.
P131	3	60	Run-on for 60 seconds.

Note: P130 counts when the indexed relay is tripped, not the number of pump cycles. If the indexed relay only trips once every four pump cycles then the actual interval of the run-on will be 20 pump cycles, or five cycles of Relay Three.

Setting the Pump Start Delays [MR 200]

The pump start delay ensures that all of the pumps do not start at once to avoid power surges. There are two parameters used here: P132–Pump Start Delay and P133–Pump Power Resumption Delay. The default is 10 seconds but you can increase this if your pumps take longer to spin up.

Example:

The delay between pumps is set to 20 seconds and the delay of the first pump is set to 30 seconds.

Parameter	Index	Value	Description
P132	G	20	Wait at least 20 seconds between pump starts.
P133	G	30	Wait for 30 seconds when power is restored.

Reducing Wall Cling [MR 200]

Use the Wall Cling parameter to randomly alter the ON and OFF setpoints over a range. This eliminates the ridge of material that builds up at the setpoint that can give false echoes.

This setting may increase the number of days between trips to clean the wet well.

Wall cling reduction is set by P136. The relay setpoints ON and OFF are randomly varied inside a range so the material level does not stop at the same point.

Example [MR 200]:

A range of 0.5 meters is used to vary the setpoint. The randomly-selected setpoints are always **inside** the ON and OFF setpoints.

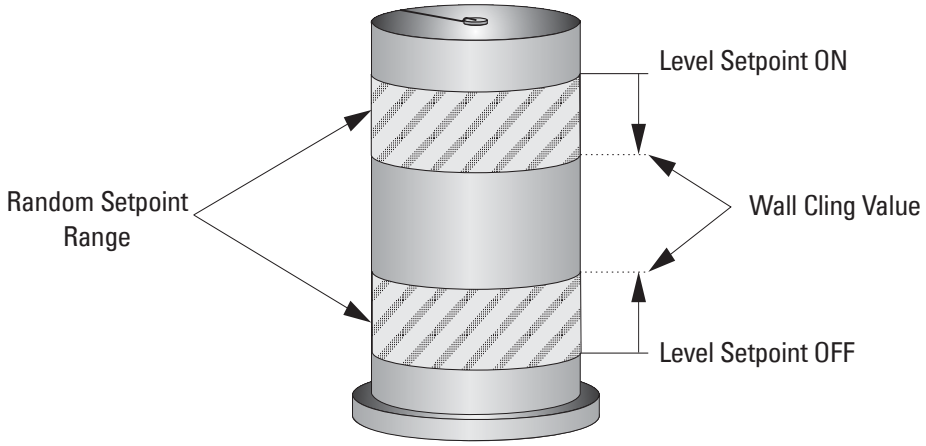

Grouping Pumps [MR 200]

You can group pumps and use the same pumping algorithm separately on each group. If you specify different pumping algorithms then the pumps are already grouped by algorithm and you do not need to use this parameter.

Group pumps only when four pumps are using the same algorithm and you want to split them into two groups.

Example:

Pumps One and Two can operate as a group and Pumps Three and Four can operate as another group.

Parameter	Index	Value	Description
P137	1	1	Groups Pumps One and Two
P137	2	1	
P137	3	2	Groups Pumps Three and Four
P137	4	2	

Setting a Flush Valve [MR 200]

A flush valve stirs up the sediment on the bottom of the well during pumping so that it doesn't accumulate. These parameters will control any relays set with P111 = 64 (Flush Valve).

Most sets of parameters will work with only one or two changes; however, for these parameters to work, all of them must be set to a value.

Example:

The flush valve connects to Relay Four and the watched pump is on Relay One.

Parameter	Index	Value	Description
P170	G	1	Watch Relay One to count pump cycles.
P171	G	3	Open the flush valve for 3 cycles.
P172	G	10	Use the flush value every 10 cycles.
P173	G	120	Open the flush valve for 120 seconds.

Relay Controlled by Communications

A relay can be controlled directly by a remote system through communications. No other control schemes can then be used with a relay configured this way. Communications can be used to force status of some control relays, such as pumps.

Settings:

Parameter	Index	Value	Description
P111	5	65	Sets Relay Five to communications control.

Tracking Pump Usage

You can find out how much an individual pump has been used by viewing the pump records parameters.

Information Available	Parameter Access
Current RUN time	P309
Total pump hours	P310
Total pump starts	P311
Total pump RUN on occurrences	P312 **[MR 200 ONLY]**

Rake (Screen) Control [MR 200]

This feature is only available on the MultiRanger 200.

Screens or rakes are mounted on the inflow channel of the wastewater treatment plant to prevent debris from clogging the equipment.

When material builds up on the screen, a level differential is created, and the water level is higher in front of the screen than behind it. When this differential reaches the programmed setpoint, the MultiRanger activates a relay to operate mechanical rakes that clean the screen and ensure a steady flow.

Setting a Rake Control

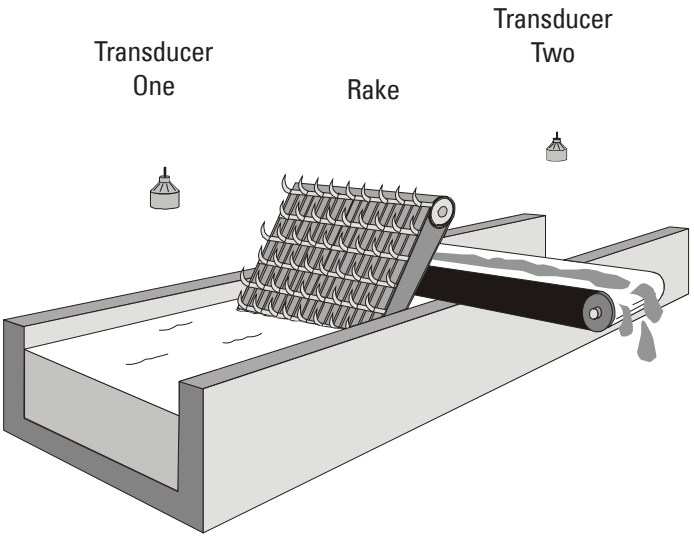

P007 (3)
Max differential between Point 1 and Point 2 reading also sets 100% scale for bargraph and mA output.

Note: transducers may be mounted at variant heights.

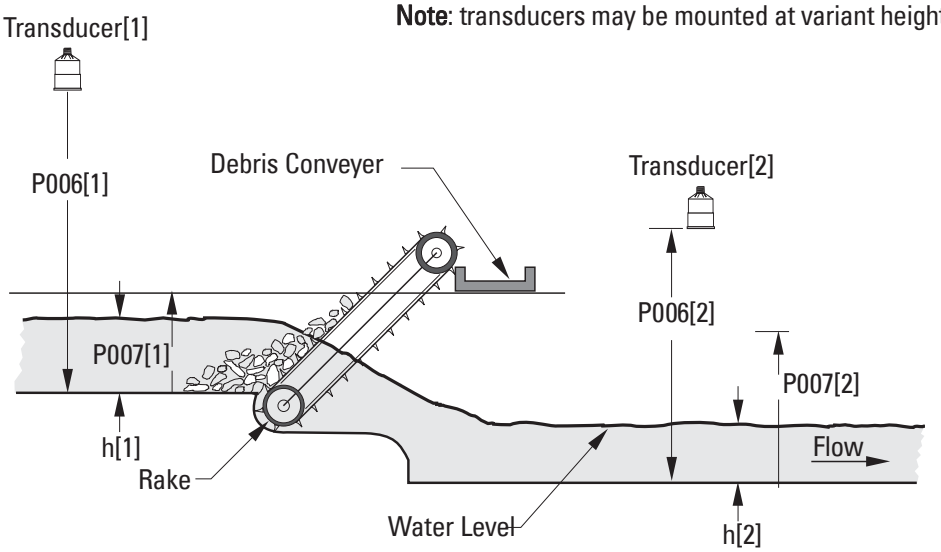

Point Three: Level Distance = h[1] –h[2]

Setting the Common Parameters

Prerequisite: Substitute the details of your application in place of the sample values provided. If you are bench testing the unit, set your test values to be the same as the sample values.

Parameter	Index	Value	Description	
P001	G	4	Operation	= Differential
P002	G	1	Material	= liquid
P003	1,2	2	Max. Process Speed	= medium
P004	1,2	102	Transducer	= XPS-10
P005	G	1	Units	= meters
P006	1	1.8	Empty	= 1.8m
	2	2.2	Empty	= 2.2m
P007	1	1.4	Span	= 1.4m
	2	1.4	Span	= 1.4m
	3	1.4	Max Differential	= 1.4m

Set Relay 1 (Operate Rake)

Parameter	Index	Value	Description
P110	1	3	Starts the rake when the difference between the two levels rises above 0.4m and stop the rake when the difference falls below 0.1m.
P111	1	50	
P112	1	0.4	
P113	1	0.1	

Set Relays 2 to 4 (Level Alarms)

P110	2	1	Description
P110	2	1	Sets Relay Two as a high level alarm for Transducer One with an ON setpoint of 1.3m and an OFF setpoint of 1.2m.
P111	2	1	
P112	2	1.3	
P113	2	1.2	
P110	3	2	Sets Relay Three as a low level alarm for Transducer Two with an ON setpoint of 0.2m and an OFF setpoint of 0.4m.
P111	3	1	
P112	3	0.2	
P113	3	0.4	
P110	4	3	Sets Relay Four as a **rake failure** alarm as it uses the differential level point (3) with an ON setpoint of 1.0m and an OFF setpoint of 0.9m.
P111	4	1	
P112	4	1.0	
P113	4	0.9	

External Totalizers and Flow Samplers [MR 200]

This feature is only available on the MultiRanger 200.

External totalizers are simple counters which count the number of relay clicks produced by the MultiRanger. This is generally used to keep track of OCM or pumped volume totals. Note that both of these values are also stored in the MultiRanger and are available through communications.

Flow samplers are devices which take a sample of liquid when triggered by a relay click. These samples are used to monitor water quality over time. Flow samplers can be driven by OCM volume or by relay click volume settings depending on the application requirements.

Relay Contacts

Pumped volume is calculated at the end of the pump cycle. Totalized volume given through a relay set up for totalizer (P111[r]=40) will be given in bursts at this time.

Both the open and closed times for the relay contact are provided by P645 and are preset to 0.2 seconds. Partial units are added to the next pump cycle.

Example:

Shows a relay set up to make one contact for every cubic metre (m^3) of liquid.

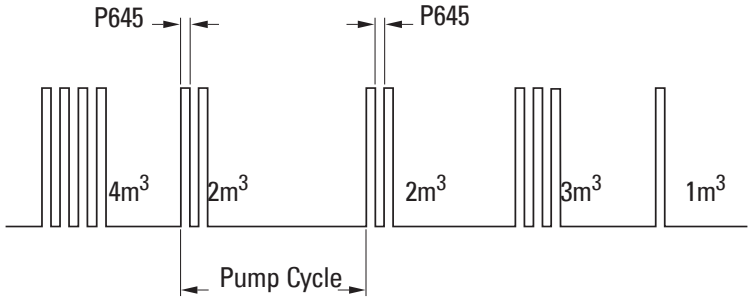

Totalizer

To set the totalizer to provide relay contact to an external counter, use the following:

Counter Formula	
1 Contact per 10^{P640} units	P640 is preset to **0** so the default number of contacts for a pumped volume cycle is equivalent to the number of volume units.

The source of units depends on the operation:

Operation	Units Source Parameter
OCM (P001=6)	P604–Maximum Flow, or P608–Flowrate Units
Pumped Volume (P001=7)	P051–Max Volume

Flow Sampler

Based on Volume and Time

To trigger a flow sampler relay based on flow, use P111[r]=41 and set the other parameters:

Counter Formula
1 Contact per P641 x 10^{P642} units

Operation	Units Source Parameter
OCM (P001=6)	P604 – Maximum Flow, or P608 – Flowrate Units

By using a mantissa (P641) and an exponent (P642), the relay contacts can be based on a volume other than a multiple of ten.

During the periods of low flow, the sampler may be idle for lengths of time. Program P115 to a time interval in hours to drive the sampler. The sampler will operate based on the volume of flow or the time interval, whichever comes first.

Open Channel Monitoring (OCM) [MR 200]

An OCM installation is defined one of three ways, based on the Primary Measuring Device (PMD):

1. Dimensional (P600 = 2,3,6,7)

For some common weir and flume types. PMD dimensions (P602) are entered directly.

- BS-3680 / ISO 1438/1 Thin plate V notch weir on page 75
- BS-3680 / ISO 4359 Rectangular Flume on page 76
- Palmer Bowlus Flume on page 77
- H Flume on page 78

2. Exponential (P600 = 1)

For most other weir and flume types. PMD exponents provided by the manufacturer are entered. Flow is calculated using the exponent (P601) and the maximum values (P603 and P604).

- Standard Weirs on page 79
- Parshall Flume on page 80
- Leoplod Lagco on page 81
- Cut Throat Flume on page 82

3. Universal (P600 = 4,5)

For all other PMDs, the head-to-flow curve can be plotted based on known breakpoints, usually supplied by the PMD manufacturer.

- Typical Flow Characterization on page 83
- Example Flumes on page 84
- Example Weirs on page 84

Common Parameters

These Quick Start parameters are required for all installations.

Parameter	Index	Value	Description	
P001	G	6	Operation	= OCM
P002	G	1	Material	= liquid
P003	G	2	Max. Process Speed	= medium
P004	G	102	Transducer	= XPS-10
P005	G	1	Units	= meters
P006	G	1.8	Empty	= 1.8m
P007	G	1.0	Span	= 1.4m
P801	G	0.8	Range Extension to avoid LOE	

Setting Zero Head

Many PMDs start flowing higher than the traditional empty distance of the application. You can account for the flow in one of two ways:

1. Use P605 (Zero Head) to have OCM calculations ignore levels below that value. Possible head = P007 minus P605.

Note: P603 (Max. Head) is preset to P007 and is not updated when P605 is used. Make sure you set P603 to the correct value when using P605.

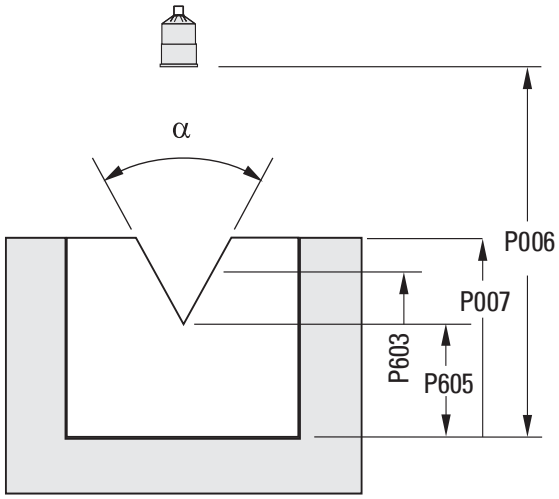

2. Use P801 Range Extension where the Empty level is set to the bottom of the weir, and above the bottom of the channel. It should be used if the surface monitored can fall past the Empty (P006) level in normal operation without reporting an LOE. The value is added to Empty (P006) and can be greater than the range of the transducer.

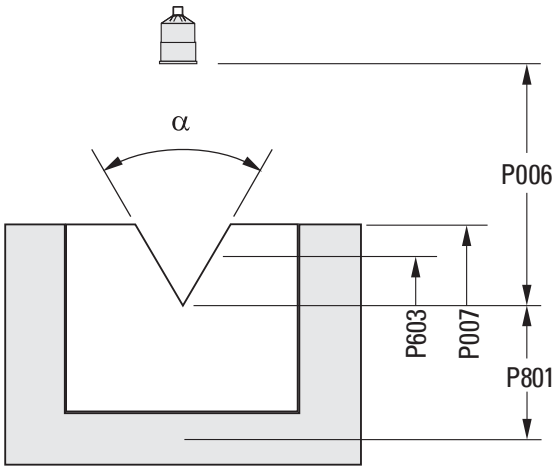

The examples on the following pages show both methods.

Setting Totalized Volume

To display the totalized volume on the LCD use the following parameters:

Parameter	Index	Value	Description
P737	G	2	Show the eight digit totalizer in the primary display

Applications Supported by MultiRanger 200

BS-3680 / ISO 1438/1 Thin plate V notch weir

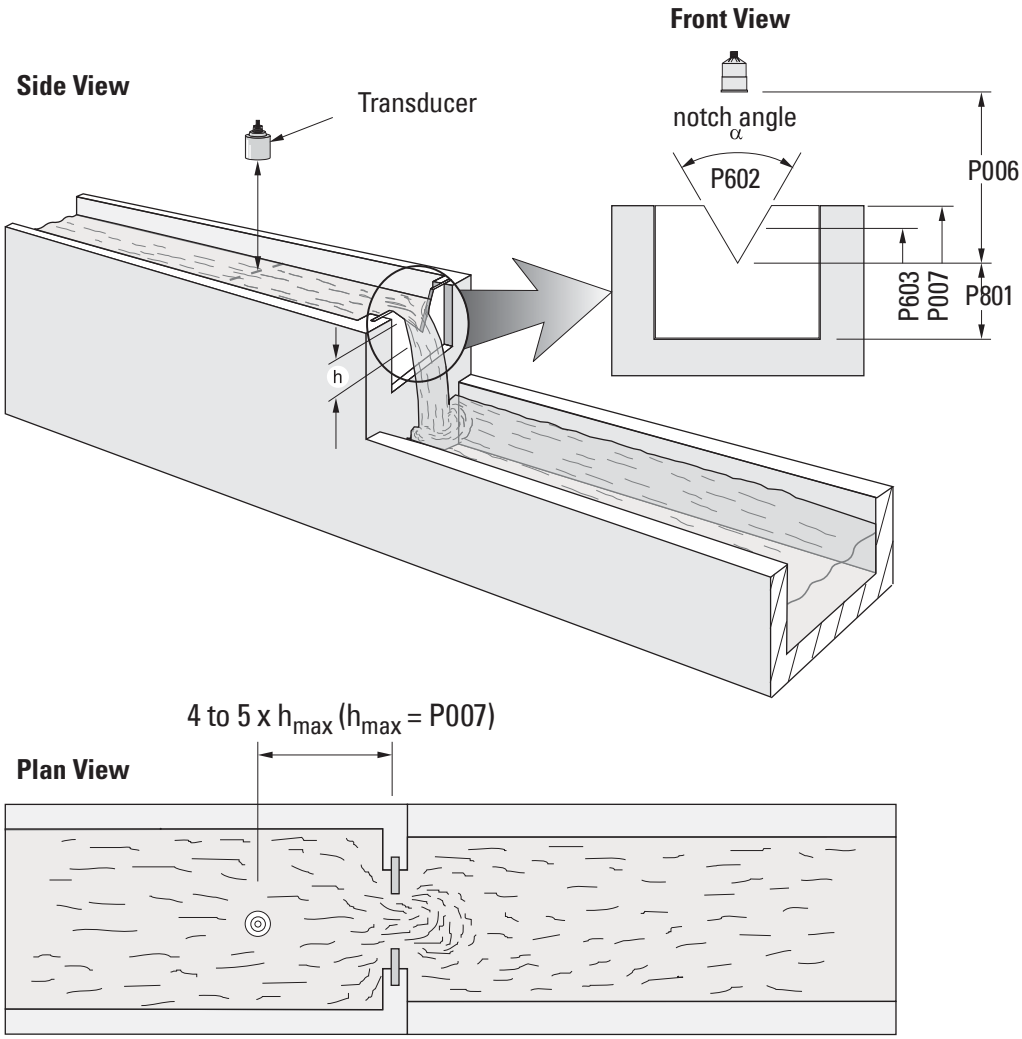

Parameter	Index	Value
P600	G	7–ISO 1438/1 V Notch Weir
P602	1	Notch angle
(view only)	2	Discharge coefficient (Ce)
P603	G	Maximum Head (preset to P007)
P801	G	Range Extension
P608	G	Flowrate Units

BS-3680 / ISO 4359 Rectangular Flume

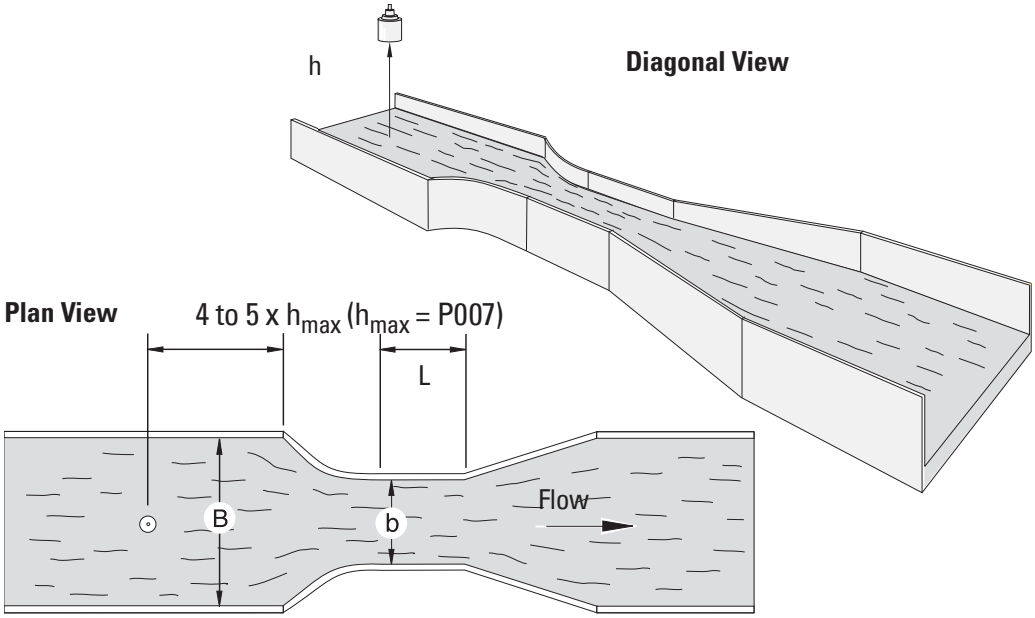

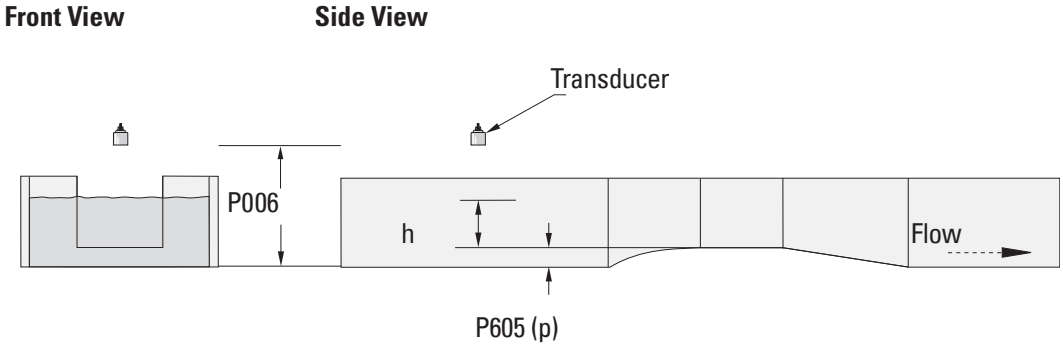

Parameter	Index	Value
P600	G	6–ISO 4359 Rectangular Flume
P602	1	Approach width (B)
	2	Throat width (b)
	3	Hump Height (p)
	4	Throat length (L)
(view only)	5	Velocity coefficient (Cv)
(view only)	6	Discharge coefficient (Cd)
(view only)	7	Cross sectional area
P605	G	Zero Head
P608	G	Flowrate Units

Palmer Bowlus Flume

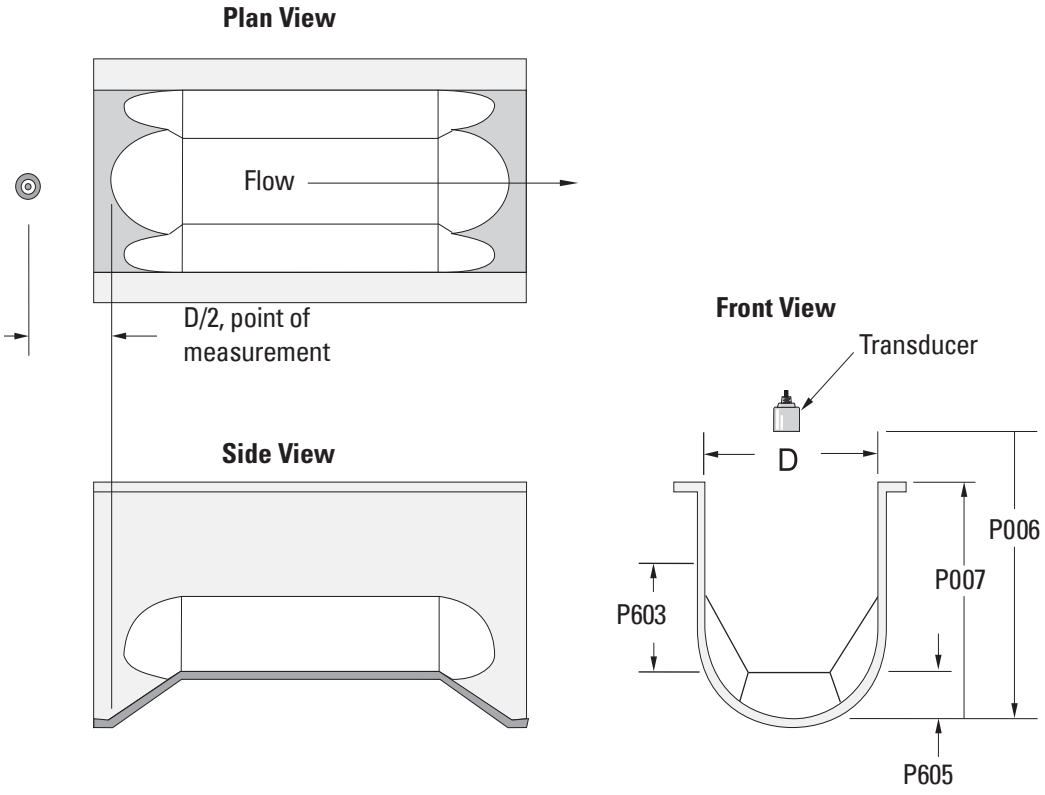

Parameter	Index	Value
P600	G	2–Palmer Bowlus Flume
P602	1	Flume width (D)
P603	G	Maximum Head (preset = P007)
P604	G	Maximum Flow
P605	G	Zero Head
P606	G	Time Units

Application Information

- Sized by pipe diameter D
- Flume relief is trapezoidal
- Designed to install directly into pipelines and manholes
- Head is referenced to bottom of the throat, not bottom of the pipe
- For rated flows under free flow conditions, the head is measured at a distance of D/2 upstream from the beginning of the converging section

H Flume

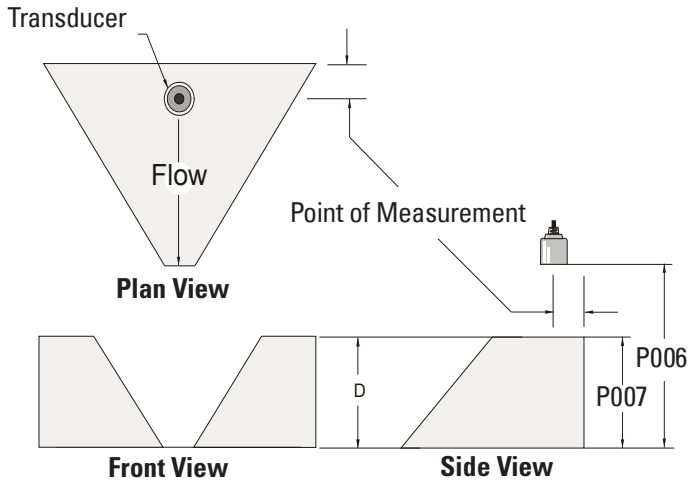

Parameter	Index	Value
P600	G	3–H Flume
P602	1	Flume height (D)
P603	G	Maximum Head (preset = P007)
P604	G	Maximum Flow
P606	G	Time Units

- Sized by maximum depth of flume
- Approach is preferably rectangular, matching width and depth for distance 3 to 5 times the depth of the flume
- May be installed in channels under partial submergence (ratio of downstream level to head). Typical errors are:
  - 1% @ 30% submergence
  - 3% @ 50% submergence
- For rated flows under free flow conditions, the head is measured at a point downstream from the flume entrance

Flume Size (Diameter in feet)	Point of Measurement cm	inches
0.5	5	1¾
0.75	7	2¾
1.0	9	3¾
1.5	14	5½
2.0	18	7¼
2.5	23	9
3.0	28	10¾
4.5	41	16¼

- H flumes come with a flat or sloping floor. The same flow table can be used because error is less than 1%.

PMDs with Exponential Flow to Head Function

For Primary Measuring Devices (PMDs) that measure flow by an exponential equation, use these parameters. Ensure that you use the correct exponent for your PMD; the values below are samples only.

Standard Weirs

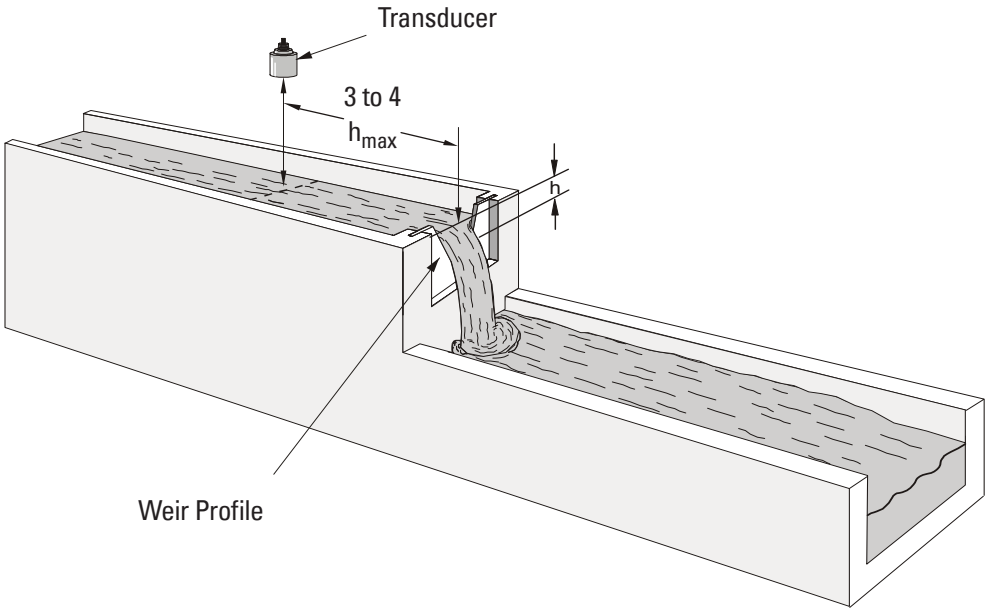

Applicable Weir Profiles

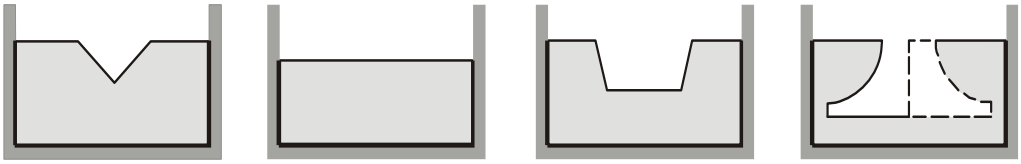

V-notch or triangular | **suppressed rectangular** | **cipolleti or trapezoidal** | **sutro or proportional**

Parameter	Index	Value	
P600	G	1 - Exponential Function	
P601	G	**Weir Type**	**Value**[1]
		V-notch	2.50
		Suppressed rectangular	1.50
		Cipolletti or trapezoidal	1.50
		Sutro or proportional	1.00
P603	G	Maximum Head	
P604	G	Maximum Flow	
P606	G	Time Units	
P801	G	Range Extension	

1. Values are samples only. Consult weir manufacturer's documentation for correct flow exponent.

Non-Applicable Weir Profiles

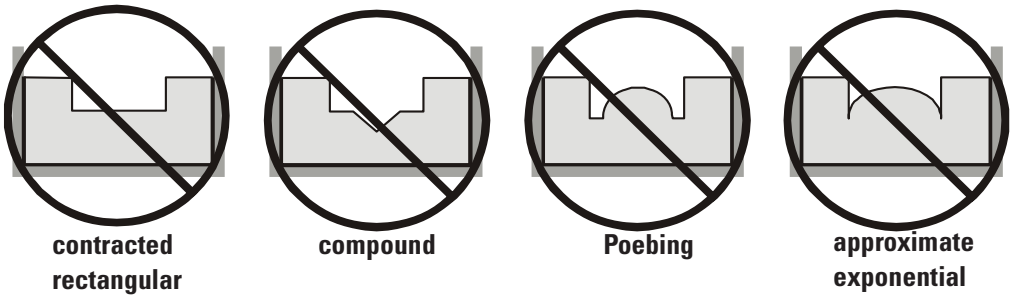

Flows through these weirs can be measured using the Universal Flow Calculation P600 = 4 or 5. See *Universal Calculation Support* on page 83.

Parshall Flume

Note: C = Converging Dimension.

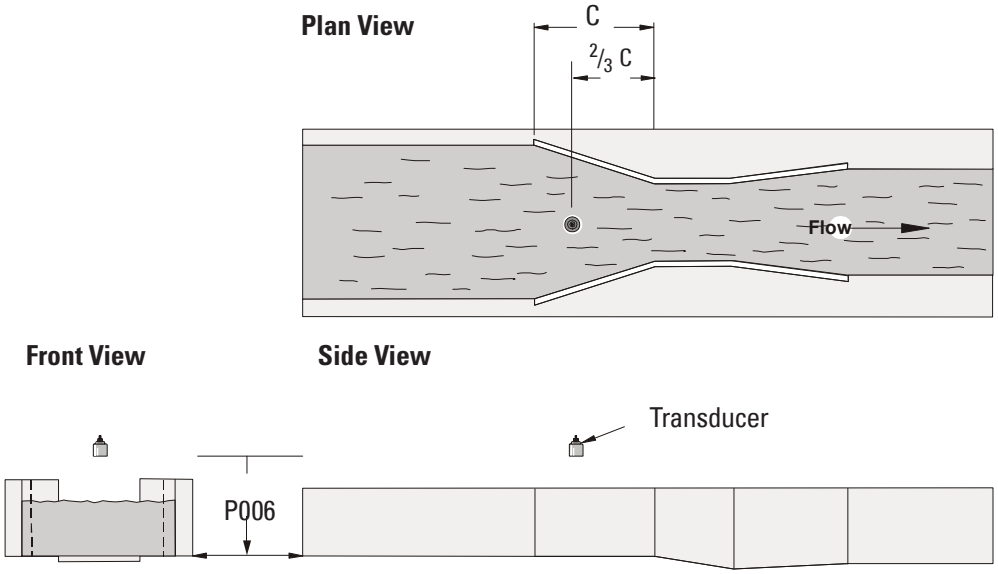

Application Information

- Sized by throat width
- Set on solid foundation
- For rated flows under free flow conditions, the head is measured at $^2/_3$ the length of the converging section from the beginning of the throat section

Parameter	Index	Value
P600	G	1–Parshall Flume
P601	G	1.22–1.607 (consult your flume documentation)
P603	G	Maximum Head
P604	G	Maximum Flow (Q)
P606	G	Time Units

Leopold Lagco Flume

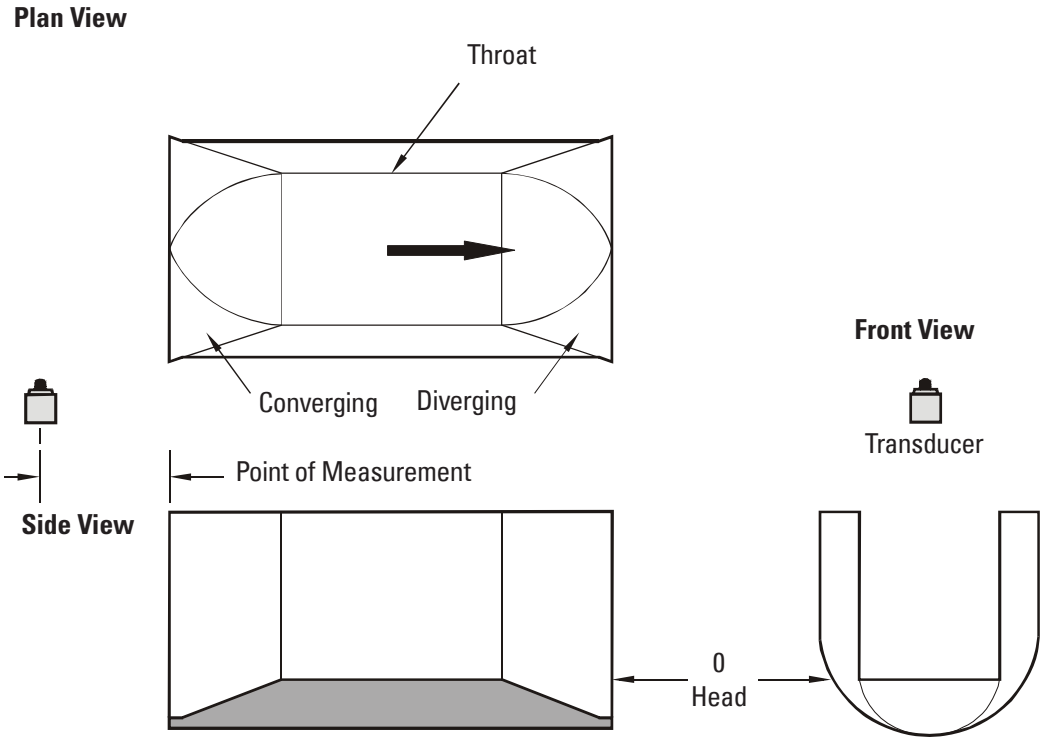

Parameter	Index	Value
P600	G	1–Leopold Lagco Flume
P601	G	1.55
P603	G	Maximum Head (preset P007)
P604	G	Maximum Flow
P605	G	Zero Head
P606	G	Time Units

Application Information

- Designed to be installed directly into pipelines and manholes
- Leopold Lagco may be classed as a rectangular Palmer-Bowlus flume
- Sized by pipe (sewer) diameter
- For rated flows under free flow conditions, the head is measured at a point upstream referenced to the beginning of the converging section. Refer to the following table:

Flume Size (pipe diameter in inches)	Point of Measurement cm	inches
4-12	2.5	1
15	3.2	1¼
18	4.4	1¾
21	5.1	2
24	6.4	2½
30	7.6	3
42	8.9	3½
48	10.2	4
54	11.4	4½
60	12.7	5
66	14.0	5½
72	15.2	6

Cut Throat Flume

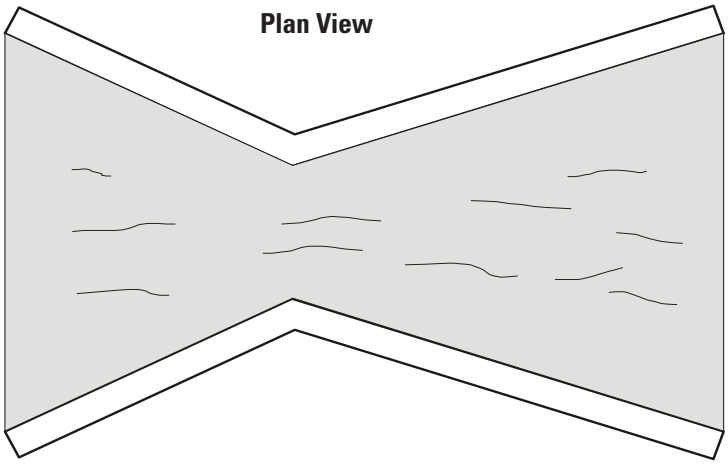

Application Information

- Similar to Parshall flume except that the floor is flat bottomed and throat has no virtual length.
- Refer to manufacturer's specifications for flow equation and point of head measurement.

Parameter	Index	Value
P600	G	1–Cut Throat Flume
P601	G	1.55
P603	G	Maximum Head (preset P007)
P604	G	Maximum Flow
P606	G	Time Units

Universal Calculation Support

When the primary measuring device (PMD) doesn't fit one of the standard types, it can be programmed using a universal characterization. When Universal is selected as the PMD type (P600), then both P610 and P611 must be entered to define the flow.

Two curve types are supported:

- P600 = 4–linear (piece wise linear)
- P600 = 5–curved (cubic spline)

Both are shown in the following chart.

Typical Flow Characterization

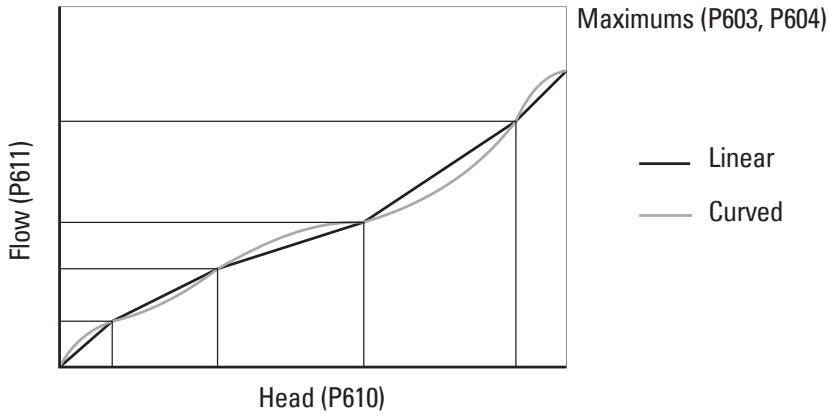

Characterization is achieved by entering the head (P610) and corresponding flow (P611), either from empirical measurement or from the manufacturer's specification. Increasing the number of defined breakpoints will increase the accuracy of the flow measurement.

Breakpoints should be concentrated in areas exhibiting the higher degrees of non linear flow. A maximum of 32 breakpoints can be defined. The curve's end point is always specified by the parameters Maximum Head (P603) and Maximum Flow (P604) for a maximum total of 33 breakpoints.

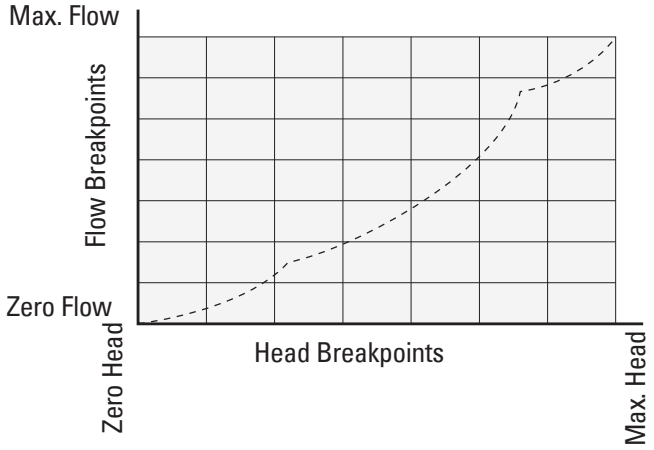

Use as many breakpoints as required by the complexity of your PMD.

See *Volume* on page 51 for more information and parameters P610 and P611 for characterization.

Example Flumes

These example flumes would both require a universal calculation.

Trapezoidal

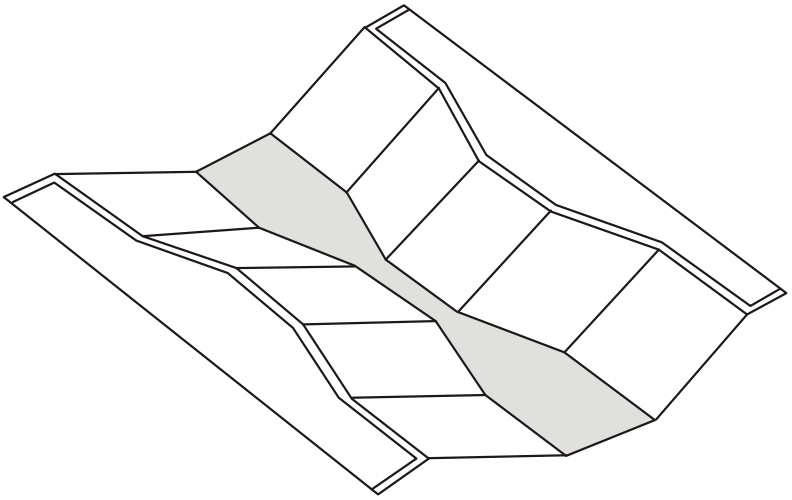

Dual Range (nested) Parshall

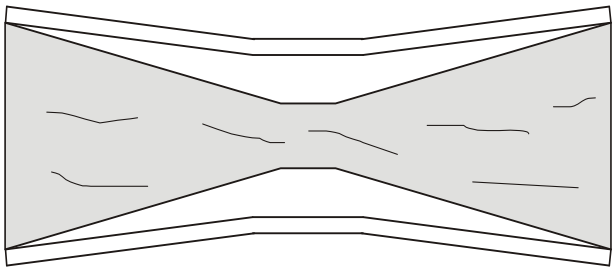

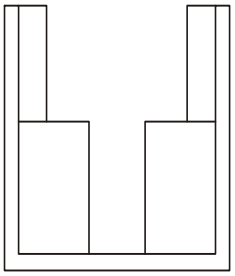

Example Weirs

These weirs could require universal calculation.

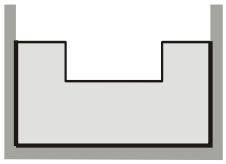

contracted rectangular

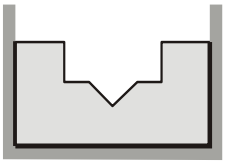

compound

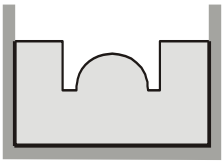

Poebing

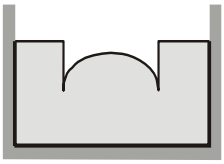

approximate exponential

Testing the Configuration

After programming the unit, you must test the device to ensure that it performs to your specifications. This test can be run in simulation mode or by varying the level in the application. The latter is preferred as it more accurately represents running conditions. However, if it is not possible to do a physical test, a simulation will ensure that control programming is correct.

Simulation

In simulation mode, the LCD display reacts to the simulated level changes. Alarm relays will also react to the simulation, but any pump or control relays will not react.

To allow pump or control relays to operate on the simulated level, set P000 to –1.

Simulating a Single Measurement

Access the appropriate parameter: (press PROGRAM and then key in the parameter number). Press TRANSDUCER five times to overcome Echo Lock (P711) if applicable: the associated Reading is displayed in the Parameter Value field, and any **alarm** relays are set accordingly.

To verify Reading calculations (P920 to P926)

1. Go to the parameter to be simulated (P920, P921, P922, P923, P924, P925, or P926), and key in a material level in Units (Units defined in P005), or % of Span (% of Span defined in P007).
2. Press ENTER to display the calculated Reading. [Regardless of setting for P001, the parameter value being simulated will display as the primary reading. The auxiliary reading will always display the level value (P921). See "Display" on page 22 for positions of the primary and auxiliary readings on the LCD.]
3. Verify the calculated Reading. (At this point, the simulation is in Stop state. The effect of the ARROW key is based on this state. See chart on page 86.)

Note: When you set P001 = 3 (Distance), span (P007) is preset to empty (P006), therefore the primary and auxiliary readings may display the same value when Space (P922) is being simulated.

Simulating a Level Cycle

Starting a (P920, P921, P922, or P923) simulation when level = 0:

1. Go to the parameter to be simulated (P920, P921, P922, or P923).
2. Press ENTER to simulate level rise and fall. At the start of a simulation, the default rate is 1% of Span / second.

3. Press the ARROW ▲ or ▼ to adjust the simulated rate of rise or fall, based on the chart on page 86. The maximum rate is 4% of Span / second.

The effect of the ARROW key is determined by the state (rate of rise or fall) immediately before the key is pressed.

Action	State (prior to pressing key)	Effect
Press ▲	Stop	Rise at 1% of Span / second
	Rise at 1% of Span / second	Rise at 4% of Span / second (max.)
	Rise at 4% of Span / second (max.)	No effect
	Fall at 1% of Span / second	Stop
	Fall at 4% of Span / second	Fall at 1% of Span / second
Press ▼	Stop	Fall at 1% of Span / second
	Rise at 1% of Span / second	Stop
	Rise at 4% of Span / second (max.)	Rise at 1% of Span / second
	Fall at 1% of Span / second	Fall at 4% of Span / second (max.)
	Fall at 4% of Span / second (max.)	No effect

When the level rises to 100% or falls to 0%, it reverses direction at the same rate.

Checking Volume Characterization [MR 200]

To confirm universal volume calculations (P050 = 9, 10) are correct:

1. Go to P920.
2. Key in a level associated with a known volume.
3. Press ENTER ↵.
4. Check the returned volume against the manufacturer's chart.
5. Change parameters P054 and P055, as required.
6. Repeat steps 2 to 5 until the volume curve is verified.

Checking OCM Flow Characterization [MR 200]

To confirm universal flow calculations (P600 = 4, 5) are accurate:

1. Go to P925.
2. Enter a level with a known flow.
3. Press ENTER ↵.
4. Check the returned flow against the manufacturer's chart.

5. Change parameters P610 and P611, as required.
6. Repeat steps 2 to 5 until the flow curve is verified.

I/O Checkout

After the unit is installed, test to verify the wiring.

Relays

Use P119 to force a state change and verify that the results are as expected (pump starts, alarm sounds, etc.).

Discrete Inputs

Use P270 to force the input value and verify that the results are as expected.

1. Go to P270 [DI] where DI = the discrete input to be tested
2. Set P270 to **0** (**forced OFF**)
3. Go to P275 [DI] to verify that the value is forced
4. Check the state of outputs to ensure that they respond as expected
5. Go to P270 [DI]
6. Set P270 to **1** (**forced ON**)
7. Go to P275 [DI] to verify that the value is forced
8. Check the state of outputs to ensure that they respond as expected

For further information see *Discrete Inputs* section on page 48.

mA Input [MR 200]

Use P254 to test the mA input value against a true level. Use a trusted external mA source to generate the signal required for testing, and verify the incoming signal with P260. Check that the system responds as expected when the mA level is changed.

mA Output

Use an external device to test the mA output against the measured level. Check that the mA value changes to reflect the changes in the measured level.

Application Test

If you are testing the application by varying the material level (the preferred test method) make sure that none of the control devices is connected (or at least that no power is available to them).

If you are testing the application in simulation mode (and P000 is not –1), then control relays are not energized and the control devices can remain connected.

While the level is being cycled, check the results of the discrete inputs either by closing the circuit externally (preferred) or by using P270 Discrete Input Function to force the input ON or OFF. Try all possible combinations to thoroughly test the setup. For each combination, run a complete cycle to verify that the relays operate as expected.

Monitor system performance carefully, under all anticipated operating conditions.

1. When the MultiRanger performs exactly as required, programming is complete.
2. If alternate Reading units, Failsafe action, or relay operation is desired, update the parameters for the new functionality.
3. If the system performance experiences problems, see *General Appendix C: Troubleshooting*, on page 231.

If you cannot observe all possible operating conditions during the System Performance Evaluation, use the level simulation (see page 85) to verify programming.

When a simulation is run, alarm relays will react to the simulated level changes, but control relays will not react. You can set P000 to value –1 to trigger the control relays based on the simulated level.

Retest the system every time you adjust any control parameters.

MultiRanger Communication Systems

The MultiRanger is an integrated level controller capable of communicating process information to a Supervisory Control and Data Acquisition (SCADA) system, via a serial device such as a radio modem, leased line, or dial-up modem.

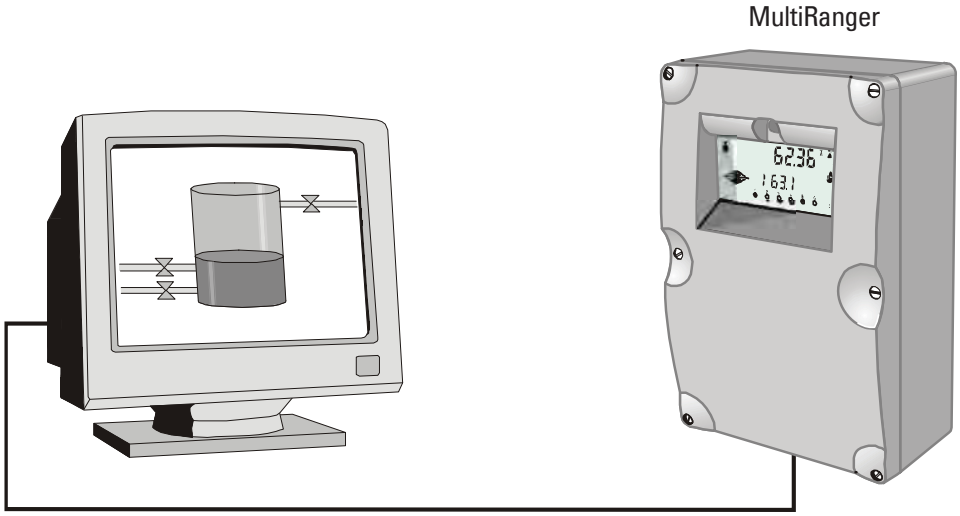

Connection via radio modem, dial-up modem, or leased line modem

The standard MultiRanger supports the following two communication protocols:

Modbus

Modbus is an industry standard protocol used by SCADA and HMI systems. The MultiRanger uses Modbus to communicate via the RS-485 port. For a description of the Modbus protocol, contact your local Schneider representative.

Dolphin

Dolphin is a proprietary Siemens Milltronics protocol designed to be used with Dolphin Plus. For more information on Dolphin Plus or to obtain a copy of the software, please go to www.siemens.com/processautomation to contact your Siemens Milltronics representative.

Optional SmartLinx® Cards

The standard MultiRanger unit may also be enhanced with Siemens Milltronics SmartLinx® communication modules that provide an interface to popular industrial communication systems.

This manual only describes the built-in communications. For more information on SmartLinx, please consult the appropriate SmartLinx manual.

Communication Systems

The MultiRanger is capable of communicating with most SCADA systems, PLCs, and PCs. The supported protocols are:

- Modbus RTU/ASCII – base unit on RS-232 or RS-485 transport
- PROFIBUS DP – optional SmartLinx® module
- Allen-Bradley® [1] Remote I/O – optional SmartLinx module
- DeviceNet® – optional SmartLinx module

Communication Ports

The MultiRanger comes with two communication ports on the base unit.

Port	Connection	Location	Interface
1	RJ-11 connector	inside enclosure on main board	RS-232
2	terminal block	terminal block	RS-485

RS-232

The RJ-11 jack connects to a laptop computer for the following:

- initial setup
- configuration
- troubleshooting
- periodic maintenance

RS-485

The RS-485 port on the terminal blocks connects into industrial communications wiring and has the following advantages:

- runs communications cable farther
- allows multiple slave units on the network, addressed by P771 – Network Address

To communicate with equipment requiring RS-485 capability, Siemens Milltronics offers the RS-485 External Modem Kit. For more information, go to www.siemens.com/processautomation.

Modbus

The Modbus protocol is supported in the base unit and can be configured using the Communications parameters P770 to P782.

To set up communications with a Modbus RTU master device on port 2 using RS-485, set the following parameters:

1. Allen-Bradley is a registered trademark of Rockwell Automation.
DeviceNet is a registered trademark of Open DeviceNet Vendor Association.

Parameter	Index	Value	Description
P770	2	3	Modbus RTU slave
P771	2	1	Network address, only used for RS-485
P772	2	9.6	Data rate of 9600 baud
P773	2	0	No parity, common setting
P774	2	8	8 data bits, common setting
P775	2	1	1 stop bit, common setting
P778	2	0	No modem connected
P782	2	0	Index parameter values globally

SmartLinx

Other protocols are available through optional SmartLinx communications modules. Details on how to install and program these modules are contained in the SmartLinx documentation.

Dolphin Plus

Dolphin Plus software makes it easy to record and compare parameter sets for all the MultiRangers in your company. Dolphin Plus uses a proprietary protocol called ***Dolphin*** to communicate with Siemens Milltronics instruments. This protocol is set when P770 = 1.

By default the settings for port 1 (RJ-11 connection) and Dolphin Plus match. These settings are:

Parameter	Index	Value	Description
P770	1	1	Dolphin
P772	1	115.2	Data rate of 115.2 Kilo baud
P773	1	0	No parity, common setting
P774	1	8	8 data bits, common setting
P775	1	1	1 stop bit, common setting

Communications Installation

Wiring Guidelines

- the RJ-11 cable maximum length is 3 meters
- RS-485 maximum length is 1,200 meters (4,000 feet)
- use 24 AWG (minimum)
- use good quality communication grade (shielded twisted pairs) cable that is recommended for RS-485 for port 2 (Belden 9842)
- run the communication cable separately from power and control cables (do not tie wrap your RS-232 or RS-485 cable to the power cable or have them in the same conduit)
- use shielded cable and connect to ground at one end only
- follow proper grounding guidelines for all devices on the bus

Note: Improper wiring and incorrect choice of cables are two of the most common causes of communication problems.

Ports 1 and 2

Port	Wall Mount
1	RS-232 port (RJ-11 modular telephone jack) is on the motherboard and is generally used with a laptop computer or modem.
2	Connections for the RS-485 port are on the terminal block.

Ports 1 and 2: RS-232 RJ-11 Jack and RS-485 Locations

The RJ-11 jack and the RS-485 port are inside the enclosure of the unit.

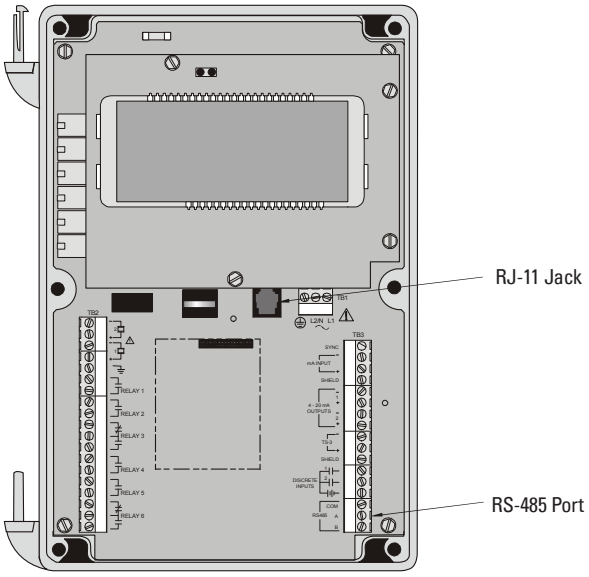

Port 1: RS-232 RJ-11 Jack

To connect the unit to a PC using an RS-232 jack, use the cable as shown:

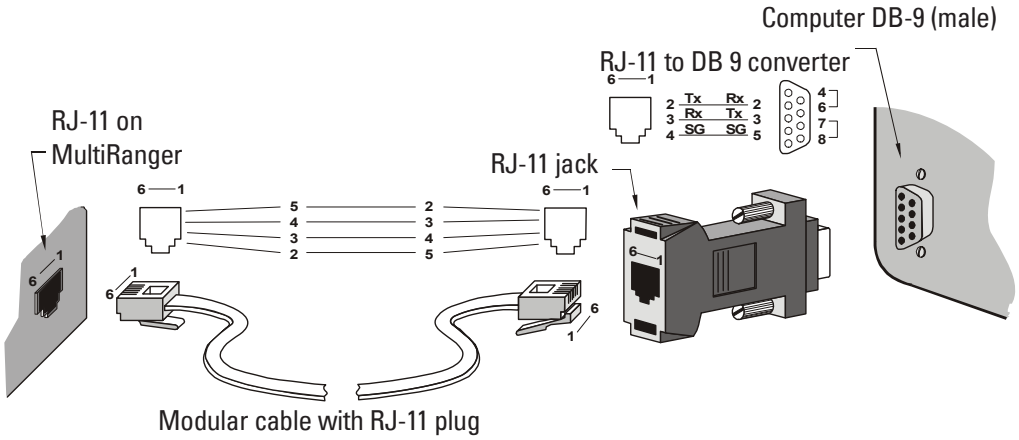

Note: Jumper pins 4-6 and 7-8 at the DB-9.

To connect the unit to a modem using an RS-232 jack:

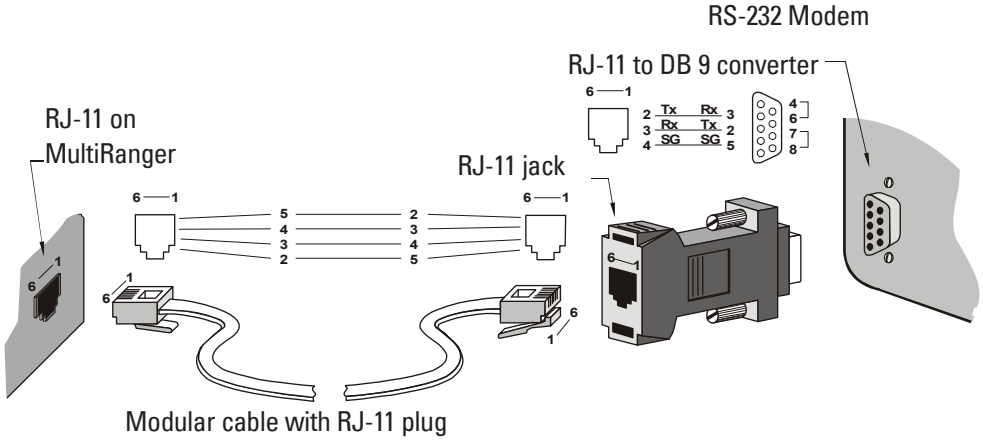

Note: Jumper pins 4-6 and 7-8 at the DB-9.

Port 2: RS-485

To connect the unit to an RS-232 modem:

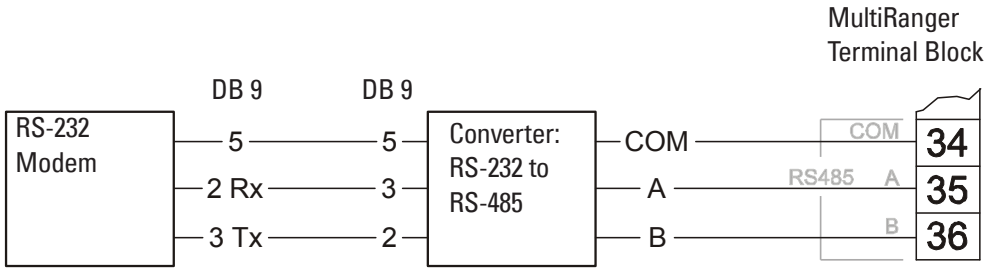

Comms Installation

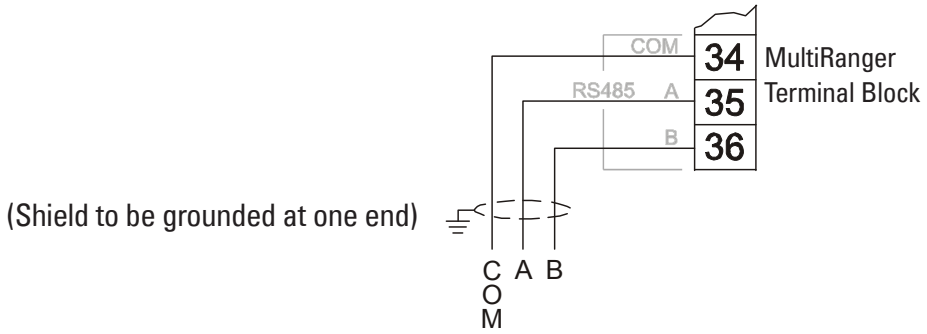

To connect the unit to a modem using an RS-485 port:

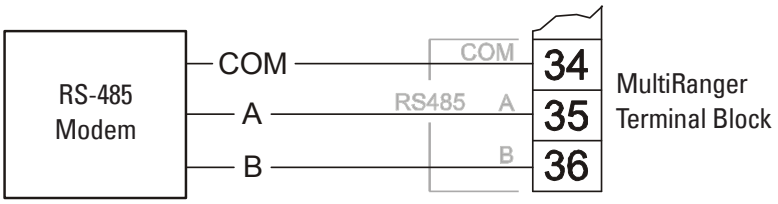

Configuring Communication Ports (Parameters)

The 11 parameters listed are indexed to the two communication ports, unless otherwise noted: An asterisk (*) identifies the preset value.

Port	Description
1	RS-232 port (RJ-11 modular telephone)
2	The RS-485 port is on the terminal blocks

P770 Port Protocol

The communications protocol used between the MultiRanger and other devices.

Primary Index	Communications Port		
Values	0		Communications port disabled
	1	*	Siemens Milltronics Dolphin protocol (preset for port 1)
	2		Modbus ASCII slave serial protocol
	3	*	Modbus RTU slave serial protocol (preset for port 2)

The MultiRanger supports the Siemens Milltronics Dolphin format (www.siemens.com/processautomation), and the internationally recognized Modbus standard in both ASCII and RTU formats. Other protocols are available with optional SmartLinx cards.

P771 Network Address

The unique identifier of the MultiRanger on the network.

Primary Index	Communications Port		
Values	Range: 0 to 9999		
	1	*	Preset

For devices connected with the Siemens Milltronics protocol, this parameter is ignored. For devices connected with a serial Modbus slave protocol, this parameter is a number from 1-247. The network administrator must ensure that all devices on the network have unique addresses. Do not use the value **0** for Modbus communications as this is the broadcast address and is inappropriate for a slave device.

P772 Baud Rate

The communication rate with the master device.

Primary Index	Communications Port		
Values	4.8		4800 baud
	9.6		9600 baud
	19.2	*	19,200 baud (preset for port 2)
	115.2	*	115,200 baud (preset for port 1)

This specifies the rate of communication in Kbaud. Any value may be entered, but the only values supported are those shown above. The baud rate should reflect the speed of the connected hardware and protocol used.

P773 Parity

The serial port parity.

Primary Index	Communications Port		
Values	0	*	No Parity
	1		Odd Parity
	2		Even Parity

Ensure that the communications parameters are identical between the MultiRanger and all connected devices, as many modems default to N-8-1.

P774 Data Bits

The number of data bits per character.

Primary Index	Communications Port		
Values	Range: 5 to 8		
	8	*	Modbus RTU
	7 or 8		Modbus ASCII
	7 or 8		Dolphin Plus

P775 Stop Bits

The number of bits between the data bits.

Primary Index	Communications Port		
Values	Range: 1 or 2		
	1	*	Preset

P778 Modem Available

Sets the MultiRanger to use an external modem.

Primary Index	Communications Port		
Values	0	*	No modem connected
	1		Answer only

P779 Modem Inactivity Timeout

Sets the time that the unit will keep the modem connected with no activity.

Primary Index	Communications Port		
Values	Range: 0-9999 seconds		
	0	*	No timeout

To use this parameter, ensure that P778 (Modem Available) =1. Ensure that the value is low enough to avoid unnecessary delays when an unexpected disconnect occurs but long enough to avoid timeout while you are still legitimately connected. This parameter value is ignored by the Modbus Master Drivers as they automatically disconnect when done communicating.

Hanging Up

If the line is idle and the P779 Modem Inactivity Timeout expires, then the modem is directed to hang up the line. Ensure that P779 is set longer than the standard polling time of the connected master device. Set P779 to **0** to disable the inactivity timer.

P782 Parameter Index Location

Determines where index information is stored for the parameter access area for the Modbus register map.

Primary Index	Global		
Values	0	*	Global
	1		Parameter-Specific

For more on Parameter Index Location, see *Parameter Access* on page 102.

Modbus Register Map

Features affecting *volume*, *mA input*, and *Average or Difference* readings apply to the MultiRanger 200 only. They are clearly marked.

The memory map of the MultiRanger occupies the Modbus holding registers (R40,001 and up). This map is used when the protocol is Modbus RTU slave or Modbus ASCII slave.

Register Map for Most Common Data

Legend	
Type	The type of data held in the group of registers.
Start	The first register to hold the referenced data.
Data Type	The possible values of the data in the register. See *Data Types* on page 107 for more information.
Description	The type of data held in the individual registers.
#R	The number of registers used for the referenced data.
Read/Write	Indicates whether the register is readable, writeable or both.

Type	Description	Start	#R [1]	Data Type	Read/ Write
	Word Order	40,062		0/1	R/W
Map ID	Register Map Type	40,063	1	0/1 = P782	R/W
ID	Siemens Milltronics Product Code	40,064	1	4 = Model 200 6 = Model 100	R
Single Parameter Access (SPA)		R40,090	7	see *Appendix A* on page 114	
Point Data	Reading (3)[2]	41,010	2	-20,000 to 20,000	R
	Volume (2)[3] **[MR 200]**	41,020	2	-20,000 to 20,000	R

1. Maximum registers shown; fewer may be used depending on options installed.
2. Varies according to model.
   MR 100: Available as reading 1 and reading 2 when in either Single or Dual Point Mode. In Dual Point Mode, reading 1 and reading 2 are always available.
   MR 200: Available as reading 1, reading 2, and Average or Difference when in either Single or Dual Point Mode. In Single Point Mode, point 2 and 3 are only available if P001 = Average or Difference. In Dual Point Mode, reading 1 and reading 2 are always available. Point 3 is only available if P001[3]= Average or Difference.
3. 2nd volume available in Dual Point Mode only.

Type	Description	Start	#R [1]	Data Type	Read/ Write
Point Data	Temperature (2)	41,030	2	–50 to 150	R
	Totalizer for points 1 and 2 [MR 200]	41,040	4	UINT32	R/W
I/O	Discrete Inputs (2)	41,070	1	Bit Mapped	R
	Relay Outputs (3 or 6)	41,080	1	Bit Mapped	R/W
	mA Input (1) **[MR 200]**	41,090	1	0000 to 20,000	R
	mA Output (2)	41,110	2	0000 to 20,000	R/W
Pump Control	Pump on Setpoint (3 or 6)	41,420	6	0000 to 10,000	R/W
	Pump off Setpoint (3 or 6)	41,430	6	0000 to 10,000	R/W
	Pumped Volume (2) **[MR 200]**	41,440	4	UINT32	R
	Pump Hours (3 or 6)	41,450	12	UINT32	R
	Pump Starts (3 or 6)	41,470	6	0000 to 10,000	R
Parameter Access		43,998 to 46999			R/W

1. Maximum registers shown; fewer may be used depending on options installed.

The MultiRanger was designed to make it easy for master devices to get useful information via Modbus. This chart gives an overview of the different sections. A more detailed explanation of each section follows below.

Word Order (R40,062)

This determines the format of unsigned, double-register integers (UINT32).

- **0** indicates that the most significant word (MSW) is given first
- **1** indicates that the least significant word (LSW) is given first

See *Unsigned Double Precision Integer (UINT32)* on page 107 for more information.

Note: Additional information is available from our Web site at www.siemens.com/processautomation

Map ID (R40,063)

This value identifies the register map used by the MultiRanger. See *P782 Parameter Index Location* on page 96.

See also *Parameter Access (R43,998 – R46,999)* on page 102 for details.

Product ID (R40,064)

This value identifies the Siemens device type:

Device Type	Value
MultiRanger 100	6
MultiRanger 200	4

Point Data (R41,010 – R41,031)

Measurement point data contain the current instrument readings. These are the values shown for the reading measurement for each measurement point. The reading is based on the setting for P001 (operation). P001 can be set to **level**, **distance**, **OCM flow**, or **volume**. See *Parameter Reference* section on page 117 for details.

The measurement registers are 41,010 to 41,012. The MultiRanger uses 41,010 when configured with a single transducer and 41,010 to 41,012 when configured with two transducers (P111=4 or 5 only). Two transducers can create three readings because they can generate an average or differential reading (R41,012) as well as the two level readings (R41,010 and R41,011).

Available registers:

Data	Registers	Parameter
Reading	41,010 to 41,012	P920
Volume **[MR 200]**	41,020, 41,021	P924
Temperature	41,030 and 41,031	P912

The reading is expressed as a percentage of full scale, multiplied by 100:

Reading	Value
0	0.00%
5000	50.00%
7564	75.64%
20,000	200.00%

Totalizer (R41,040 – R41,043)

The totalizers are stored as 32 bit integers using two registers. The totalizers can be read with R41,040 and R41,041 as totalizer for Point 1, and R41,042 and R41,043 as totalizer for Point 2. The totalizer values can be reset to any value by writing that value to the registers. The values can be cleared by writing zero (0) to the registers.

Input/Output (R41,070 – R41,143)

The MultiRanger has discrete inputs, mA inputs, mA outputs and relay outputs. See below for details for each I/O type.

Discrete Inputs (R41,070)

This table shows the current status of the discrete inputs. Only register 41,070 is used.

Discrete Input	Data Address
1	41,070, bit 1
2	41,070, bit 2

Relay Outputs (R41,080)

This table shows the current status of the relays. A reading of **0** means that the relay function is not asserted and a **1** means that it is asserted. For example, a **1** for a pump relay means that the pump is running.

Relay	Data Address
1	41,080, bit 1
2	41,080, bit 2
3	41,080, bit 3
4	41,080, bit 4
5	41,080, bit 5
6	41,080, bit 6

Values are written to control a relay only if the Relay Control Function (P111) is set to **communications** (**65**). See *Relay Function Codes (P111 Only)* on page 110.

mA Input (R41,090) [MR 200]

The mA input is scaled from 0 to 2,000 (0 to 20 mA multiplied by 100). P254 displays the value of the input. This parameter is indexed by the input number.

mA Output (R41,110-41,111)

The mA output is scaled from 0 to 2,000 (0 to 20 mA multiplied by 100). This is displayed in P911.

Pump Control (R41,400 – R41,474)

Only relays set for pump control (P111 = 50 to 52) are available. These registers have no effect on relays programmed for other uses.

Pump ON Setpoint (R41,420 – R41,425)

The **ON** setpoint level (P112) for the referenced pump relay.

The setpoint is scaled from 0 to 10,000 (0 to 100% of span multiplied by 100). So 54.02% is shown in the register as 5402.

Pump OFF Setpoint (R41,430 – R41,435)

The **OFF** setpoint level (P113) for the referenced pump relay.

The setpoint is scaled from 0 to 10,000 (0 to 100% of span multiplied by 100). So 54.02% is shown in the register as 5402.

Pumped Volume (R41,440 – R41,443) [MR 200]

The pumped volume registers hold the current total for all of the pumps associated with a level point. These registers are available only if operation is set to **pumped volume** (P001 = 7).

These volumes can become very large. Therefore, two registers are used to hold the value. See *Unsigned Double Precision Integer (UINT32)* on page 107 for more information.

The value in the registers is given as an integer value but must be interpreted as having the number of decimals set in P633 (LCD Totalized Decimal Position): this number can be **0** to **3**. Ensure that your software accounts for these decimal places before you report the pumped volume totals.

Pump Hours (R41,450 – R41,461)

The number of running hours for the referenced pump relay. The hours are given to three decimal places, so the integer must be divided by 1000 to get the correct value. For example 12,340 represents 12.34 hours.

This value comes from parameter P310. See page 157 of the *Parameter Reference* section for details.

Pump Starts (R41,470 – R41,475)

The number of pump starts for the referenced pump relay.

This value comes from parameter P311. See page 157 of the *Parameter Reference* section for details.

Parameter Access (R43,998 – R46,999)

Parameter values are given as integers in the range of registers from R44,000 to R44,999. The last three numbers of the register correspond to the parameter number.

Parameter Register #	Format Register #	Parameter #
44,000	46,000	P000
44,001	46,001	P001
44,002	46002	P002
…	…	…
44,999	46,999	P999

Usually, the parameters are all **read / write**.

Note:

- Parameters P000 and P999 are **read only**. If P000 is set to **lock activated** then all of the parameters are **read only** via the handheld programmer
- Parameter P999 (Master Reset) cannot be used via Modbus
- See *Data Types* on page 107 for a description of the different types of data associated with different parameters

Each parameter register has a corresponding format register that holds the format information required to interpret the value. See *Format Words (R46,000 to R46,999)* on page 105.

Parameter Indexing

Many parameters are indexed. There are two possible indexes: a primary index and a secondary index. A secondary index is a sub-address of the primary index. Some indexed parameters affect multiple I/O devices.

The following is an example of a primary index:

P111 is the Relay Control Function. This parameter determines how a relay is controlled by the MultiRanger (used as an alarm, for pump control, etc.). Because there are up to six relays on the MultiRanger, P111 is indexed by six to allow each relay to be programmed independently.

A few parameters also have a secondary index. While a secondary index is important for setting up the MultiRanger, it is almost never needed through remote communications.

Indexing the Parameter Access Area

Each parameter communicates its value to only one register. You must know the index(es) for the parameter in order to interpret the information in the register correctly.

For example, to make use of the value returned in register R44,111 you must know which relay it is referring to. See *Relay Function Codes (P111 Only)* on page 110 for details on P111 values.

To determine the index values, the primary and secondary index must be **read** or **write**. The two possible methods of handling these index values are described in the following paragraphs: *Global Index Method* and *Parameter Specific Index Method*.

Reading Parameters

To read parameter values, follow the steps listed in either the Global or the Parameter Specific Index Method that follow. You must be able to program your HMI or SCADA system before completing these methods.

Global Index Method (P782 = 0)

Global format method sets index values for all parameters simultaneously. Use this method to read multiple values set to the same index values.

1. Write the primary index value into R43,999.

   This is a value between **0** and **40** which specifies the input or output indexed by the parameter.

Examples are:

- Transducer 1 is index 1
- Discrete input 2 is index 2
- Relay 5 is index 5

2. Write the secondary index value into R43,998.

   This is a value between **0** and **40** that specifies the secondary index on the parameter. This value is usually **0**.

3. Write the desired format value into the appropriate format register. Because the primary and secondary indexes are already specified, these portions of the format word are ignored and only the last digit is significant.

   See *Format Registers* on page 115 for details.

4. Read the value from the appropriate parameter register.

Types of values are:

- *Numeric Values*, on page 107
- *Bit Values*, on page 107
- *Split Values*, on page 108
- *Text Messages*, on page 109
- *Relay Function Codes (P111 Only)*, on page 110

A value of 22,222 indicates that an error has occurred. Specify a different format type and try again.

Parameter Specific Index Method (P782 = 1)

The Parameter Specific index method sets the index values for each parameter independently. Use this method to read multiple parameters with different index values.

1. Write the primary index, secondary index, and data format values into the appropriate format register.

   For example, to read the following information:
   - measured level (P921)
   - in units with three decimal places

- from Transducer One

Send the integer value 01008 to register 46,921.

2. Read the value from the appropriate parameter register (the example uses 44,921).

   Types of values are:
   - *Numeric Values* on page 107
   - *Bit Values* on page 107
   - *Split Values* on page 108
   - *Text Messages* on page 109
   - *Relay Function Codes (P111 Only)* on page 110

   A value of 22,222 indicates that an error occurred. Specify a different format type and try again.

Writing Parameters

The method of writing parameters is similar to the method of reading them. Become familiar with *Reading Parameters*, page 103, before attempting to write any parameters.

To write parameter values to the MultiRanger, follow these steps:

Global Index Method (P782 = 0)

1. Write the primary index value into R43,999.
2. Write the secondary index value into R43,998.
3. Write the desired format value into the appropriate format register.
4. Write the value to the appropriate parameter register.

Parameter Specific Index Method (P782 = 1)

1. Write the primary index, secondary index, and data format values into the appropriate format register.
2. Write the value to the appropriate parameter register.

Format Words (R46,000 to R46,999)

Format words are unsigned integers that contain up to three values (described below). The number of values used in the format words depends on the Parameter Index Location (P782) that is used.

Parameter P782 Parameter Index Location, described on page 96, determines which of two methods is used to access the format words: Global Index Method or Parameter Specific Index Method.

Global Index Method (P782 = 0)

Only the final digit of the format word determines the decimal offset (below).

Parameter-Specific Index Method (P782 = 1)

All three decimal fields are used to determine the parameter value's primary index, secondary index, and decimal offset.

Format Registers

Each format register is made up of three decimal fields:

- decimal offset
- secondary index
- primary index

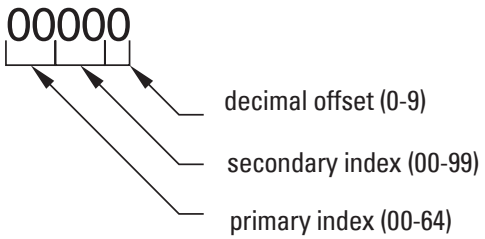

The primary and secondary indices correspond to those that are used by the parameter.

The decimal offset indicates how the remote system must interpret the integer value that is stored in the parameter access register. The following table shows how different parameter values can be shown based on a register value (integer) of **1234**.

Decimal	Offset	Example
0	0	1,234
1	–1	12,340
2	–2	123,400
3	–3	1,234,000
4	–4	12,340,000
5	–5	123,400,000
6	+1	123.4
7	+2	12.34
8	+3	1.234
9	Percent	12.34%

Examples of using the format word for both the index values and the decimal offset value are shown below:

Format	Primary Index	Secondary Index	Decimal
00000	00	00	0
01003	01	00	3 right
02038	02	03	3 left
05159	05	15	percent

To write these values you can use a decimal offset as follows: format word = (primary index x 1000) + (secondary index x 10) + (decimal).

Data Types

The MultiRanger parameters do not always use integers to hold values. For the convenience of the programmer, those values are converted to and from a 16-bit integer number. This section describes the conversion process. The sections that follow describe where those values are in the discrete I/O and block transfer addresses, and how to get the parameters you need.

Numeric Values

Numeric parameter values are the most common. For example, parameter P920 (Reading) returns a number that represents the current reading (either **level** or **volume**, depending on the MultiRanger configuration).

Numeric values are requested or set in units or percent of span, and may be specified with a number of decimal places.

Numeric values must be in the range –20,000 to +20,000 to be valid. If a parameter is requested and its value is more than +20,000, the number 32,767 is returned; if it is less than –20,000, the number –32,768 is returned. If this overflow happens, decrease the number of decimal places.

If a parameter cannot be expressed in terms of percent of span, or has no meaningful value, the number 22,222 is returned. Try requesting the parameter in units, or refer to P005 in the *Parameter Reference* section on page 122.

Bit Values

Bits are packed into registers in groups of 16 bits (1 word). In this manual, the bits are numbered from 1 to 16, with bit 1 as the least significant bit (LSB) and bit 16 as the most significant bit (MSB).

16	15	14	13	12	11	10	09	08	07	06	05	04	03	02	01
MSB															LSB

Unsigned Double Precision Integer (UINT32)

Large numbers are put into unsigned 32 bit integers. By default, they are set up so that the first word (register) is the most significant word (MSW) and the second word (register) is the least significant word (LSW).

For example, if R41,442 is read as a UINT32, the 32 bits would look like this:

R41,442			R41,443		
16	MSW	1	16	LSW	1
32	32-bit integer value (UINT32)				1

The two registers are read as a 32-bit integer.

The most significant word (MSW) and least significant word (LSW) can be reversed to accommodate some Modbus drivers. See *Word Order (R40,062)* on page 98 for details.

The position of the decimal place is dependent on the register. For more details see the description of the register.

Split Values

Certain parameters are actually a pair of numbers separated by a colon, using this format: **xx:yy**.

One example is P807, Transducer Noise, where:

xx = the average noise value in dB

yy = the peak noise in dB

The number which corresponds to **xx:yy**, either for reading or setting a parameter, is determined by the following formula:

For storing to the device:

value = (**xx** + 128) x 256 + (**yy** + 128)

For reading from the device:

xx = (value / 256) – 128

yy = (value % 256) – 128

where % is the modulus operator.

The modulus can be computed by following these steps:

$value_1$ = value / 256

$value_2$ = remainder of $value_1$

$value_3$ = $value_2$ x 256

yy = $value_3$ – 128

It may simplify Parameter to notice:

xx = (most significant byte of value) – 128

yy = (least significant byte of value) – 128

Text Messages

If a device parameter returns a text message, that message is converted to an integer and provided in the register. The numbers are shown in the following table:

Number	Text Message as displayed on LCD
22222	Invalid value
30000	Off
30001	On
30002	≡ ≡ ≡ ≡
30003	[ ] [ ] [ ] [ ] (parameter does not exist)
30004	Err
30005	Err1
30006	Open
30007	Short
30008	Pass
30009	Fail
30010	Hold
30011	Lo
30012	Hi
30013	De
30014	En
30015	---- (parameter has not been set)
-32768	Value is less than –20,000
32767	Value is greater than 20,000

Relay Function Codes (P111 Only)

Please note that the MultiRanger 200 offers more function codes.

If a device parameter returns a relay function code, that message is converted to a number and is then provided in the register. The numbers are shown in the following table:

MultiRanger 100

Control	Relay Function Code	Number	P111
General	OFF, relay not used	0	0
	Undesignated Level Alarm	1	1
	Low-Low Level Alarm	2	1 – LL
	Low Level Alarm	3	1 – L
	High Level Alarm	4	1 – H
	High-High Level Alarm	5	1 – HH
	Loss of Echo (LOE) Alarm	20	6
	Transducer Cable Fault Alarm	16	7
Pump	Fixed Duty Assist	25	50
	Alternate Duty Assist	30	52
Control	Communication	66	65

MultiRanger 200

Control	Relay Function Code	Number	P111
General	OFF, relay not used	0	0
	Undesignated Level Alarm	1	1
	Low-Low Level Alarm	2	1 – LL
	Low Level Alarm	3	1 – L
	High Level Alarm	4	1 – H
	High-High Level Alarm	5	1 – HH
	In Bounds Alarm	6	2
	Out of Bounds Alarm	9	3
	Rate of Level Change Alarm	12	4
	Temperature Alarm	15	5
	Loss of Echo (LOE) Alarm	20	6
	Transducer Cable Fault Alarm	16	7
Pump	Totalizer	22	40
	Flow Sampler	23	41
	Fixed Duty Assist	25	50
	Fixed Duty Backup	26	51
	Alternate Duty Assist	30	52
Pump (con't)	Alternate Duty Backup	31	53
	Service Ratio Duty Assist	35	54
	Service Ratio Duty Backup	36	55
	First In First Out (FIFO)	40	56
Control	Flush Valve	65	64
	Communication	66	65

See P111 on page 134 of the *Parameter Reference* section.

Error Handling

Modbus Responses

When polled by a Modbus Master, a slave device will do one of the following:

1. Not reply. This means that something went wrong with the transmission of the message.
2. Echo back the command with the correct response (see the Modbus specification for more details). This is the normal response.
3. Return an Exception Code. This reflects an error in the message.

   MultiRanger uses the following exception codes:

Code	Name	Meaning
01	Illegal Function	The function code received in the query is not an allowable action for the slave.
02	Illegal Data Address	The data address received in the query is not an allowable address for the slave.
03	Illegal Data Value	A value contained in the query data field is not an allowable value for the slave.

Error Handling

Errors can be traced to two general sources:

1. There is an error in transmission.

   OR

2. The host tries to do something that is not a valid action.

In the first case, the MultiRanger does not respond and the master waits for a **response time out** error, which causes the master to re-send the message.

In the second case, the response depends on what the host tries to do. In general, MultiRanger will not give an error to the host request. Various actions and the expected outcome are as follows:

- If the host reads an invalid register, the host will get an undetermined value back.
- If the host writes an invalid register (a non-existing parameter or a **read only** parameter), the value will be ignored and no error response will be made. However, the current value will not reflect the desired new value.
- If the host writes a **read only** register, then the value will be ignored and no error response will be made. However, the current value will not reflect the desired new value.
- If P000 is activated, then the value will be ignored and no error response will be made. However, the current value will not reflect the desired new value.

- If the host attempts to write one or more registers that are out of range, an exception response code **2** or **3** is generated, depending if the start address is valid.
- If the host used an unsupported function code, an exception response code of **01** should be generated. However, this is not guaranteed and there may be no response.

Communication Troubleshooting

Generally

1. Check the following:
   - There is power at the unit
   - The LCD is showing the relevant data
   - The device can be programmed using the hand programmer
2. Check the wiring pin outs and verify that the connection is correct.
3. Verify that values in the set-up parameters (P770 to P779) match the settings in the computer used to communicate with the unit.
4. Check that the port on the computer is correct. Sometimes trying a different Modbus driver will solve the problem. An easy stand-alone driver called ModScan32 is available from Win-Tech at www.win-tech.com. This driver is helpful for testing communications.

Specifically

1. The MultiRanger is set to communicate via a modem but no communication is returning to the master.
   - Check that the parameters are set up correctly and that the correct port is configured
   - Verify the wiring diagram. Note that there is a difference between wiring directly to a computer and wiring to a modem.
   - Verify that the modem is set up correctly. Siemens Milltronics has a series of Application Guides that may help. Please contact your local Siemens Milltronics representative for more information on Application Guides.
2. A MultiRanger parameter is set via remote communications, but the parameter remains unchanged.
   - Some parameters can only be changed when the device is not scanning. Try putting the device in program mode, using the operating mode function.
   - Try setting the parameter from the keypad. If it can not be set using the keypad, check the lock parameter and set it to **1954**.

Communication Appendix A: Single Parameter Access (SPA)

This Appendix is intended to provide someone with advanced communications knowledge the ability to access any parameter value in any available format.

Built into MultiRanger is an advanced handshaking area that can be used to read and write single registers to the MultiRanger. This section performs a similar function to the Parameter access section. The differences are:

1. Advanced section is more powerful and harder to program.
2. Advanced section only gives you access to one parameter at a time.

Mapping

Parameter Read and Write (40,090 – 40,097) is a series of eight registers used for reading and writing parameter values to and from the MultiRanger. The first three registers are always unsigned integers representing parameters and index values. The second five registers are the format and value(s) of the parameter.

All parameters normally accessed through the hand-held programmer are available through these registers.

Address	Description
40,090	Parameter (integer)
40,091	Primary Index (integer)
40,092	Secondary Index (integer)
40,093	Format word (bit mapped)
40,094	Read value, word 1
40,095	Read value, word 2
40,096	Write value, word 1
40,097	Write value, word 2

Reading Parameters

To read parameters through Modbus do the following steps:

1. Send the parameter, its primary index, and its secondary index (usually 0), and format to registers 40,090 to 40,093.
2. Wait until you can read the written values from the registers (40,090 to 40,093) to confirm that the operation is complete.
3. Read the value from registers 40,094 and 40,095.

Writing Parameters

To set parameters through Modbus do the following steps:

1. Send the parameter, its primary index, and its secondary index (usually **0**) to registers 40,090, 40,091, and 40,092.
2. Write the value to registers 40,096 and 40,097.
3. Write the desired format word to register 40,093 to enable the MultiRanger to interpret the value correctly.

Format Register

Bits	Values	Description
1-8	0-2	Error Code
9-11	0-7	3-bit number representing decimal offset
12	0/1	direction of offset (0 = right, 1 = left)
13	0/1	Numeric format: Fixed (0) or Float (1)
14	0/1	Read or Write of data, Read (0), Write (1)
15	0/1	Word order: Most Significant Word first (0), Least Significant Word first (1)
16		Reserved

For example, to format the level reading so that it is shown in percent with two decimal places shifted left, the format bits would look like this:

Bit Numbers	16	15	14	13	12	11	10	09	08	07	06	05	04	03	02	01
Bit Values	0	0	0	0	0	0	1	0	0	0	0	0	0	0	0	0
	reserved	most significant first	read	fixed format	offset direction to right	decimal offset of 2			no error code							

The value sent to the MultiRanger is 0001001000000000 binary or 512 decimal. The value **512** is sent as an integer to register 40,093 to format the output words 40,094 and 40,095 accordingly.

If the numeric data type is set for integer and the value contains decimal places, they are ignored. In this situation, use the decimal offset to ensure that you have an integer value and then write your code to recognize and handle the decimal offset.

Error Codes

The error codes returned in the format area are 8-bit integers found in the lowest eight bits of the format word. This allows for 256 potential error codes.

Currently the MultiRanger has two error codes available.

Values	Description
0	No error
1	Data not available as percent (available as units)
2-255	Reserved

Parameter Reference

The MultiRanger is configured through its parameters, and the application determines the parameter values which are entered into the unit.

Please check your value entries carefully before operating the MultiRanger to ensure optimum performance.

MultiRanger 100 and MultiRanger 200

All MultiRanger 100 and MultiRanger 200 parameters are listed in this section. MultiRanger 200 parameters are identified separately. The parameter title includes this marking **[MR 200]**, indicating that parameter applies to the MultiRanger 200 only.

As a general rule, parameters affecting volume apply only to the MultiRanger 200.

Helpful Hints

Please note the following:

- **Default** values are always indicated with an asterix (*****)
- **Global** values are common for all inputs and outputs on the unit
- **Indexed** parameters can apply to more than one input or output
- **Primary index** relates to an input or output
- **Secondary index** allows for multiple values on an indexed point

Accessing a Secondary Index

1. Press MODE, and then press DISPLAY to activate secondary index.

   The → icon appears under the index field.
2. Enter the secondary index, and then enter the values to set the secondary index.

Index types

Name	Description	# of indexes
Global	This parameter applies to the entire unit	n/a
View only	This parameter can not be set, only viewed	n/a
Breakpoint	Indexed by breakpoint	Parameter dependent
Dimension	Indexed by PMD dimension	up to 7
Discrete Input	Indexed by discrete input	2
Echo Profile	Indexed by stored echo profile	10
Level[1]	Indexed by level point	1, 2 or 3
mA input[1]	Indexed by mA input	1
mA output[1]	Indexed by mA output	0 or 2
Comm. Port	Indexed by communications port	2
Relay	Indexed by relay	3 or 6
Transducer[2]	Indexed by transducer	1 or 2

1. **MultiRanger 100:** The two level points are: Transducer One and Transducer Two.
   Level point typically has 1 index in Single Point Mode (standard), and 2 indexes in Dual Point Mode (optional).
   MultiRanger 200: The three level points are: transducer 1, transducer 2, and the calculated point which can be difference (P001=4) or average (P001=5).
   Level point typically has 1 index in Single Point Mode (standard), and 2 indexes in Dual Point Mode (optional). A third index is available in both modes when Operation (P001) is set for DPD (P001=4) or DPA (P001=5).

2. **MultiRanger 200:** The number of indexes available in Single Point Mode (standard) is typically 1, but can be expanded to 2 if Operation (P001) is set for DPD (P001=4) or DPA (P001=5).
   In Dual Point Mode (optional), the number of available indexes is always 2.

P000 Lock

Notes:
- This lock only applies to the handheld programmer: it does not lock access through communications.
- A remote master can change configuration if P799 is set to allow this.

Secures the MultiRanger from changes via the handheld programmer.

Primary Index	Global		
Values	1954	*	OFF (programming permitted)
	-1		Simulation Controls (relays energize based on simulated level)
	other		lock activated (programming secured)
Related			• Simulation on page 85

WARNING:
Use this lock as backup security only. It uses a fixed value which can be discovered by unauthorized personnel.

Access this parameter directly (type **000**) and enter any value (except 1954) to secure programming lock. To unlock the MultiRanger, access this parameter and enter **1954**.

Quick Start (P001 to P007)

P001 Operation

Sets the type of measurement required for the application.

Primary Index	**Single Point Model**			**Dual Point Model**
	Global			Transducer
Values	0		Out-of-service	
	1		Level – how full the vessel is (**MR 200:** volume – P050)	
	2		Space – how empty the vessel is (**MR 200:** ullage – P050)	
	3	*	Distance – distance from transducer to material	
	4		DPD – dual point difference **[MR 200]**	
	5		DPA – dual point average **[MR 200]**	
	6		OCM – flow rate in an open channel **[MR 200]**	
	7		Pump Totalizer – total pumped volume **[MR 200]**	
Alters	• P600 Primary Measuring Device			

For DPD and DPA Programming [MR 200]

Please note that this feature is only available on the MultiRanger 200.

Single Point Model Use

For Dual Point Difference (DPD) or Dual Point Average (DPA), the unit requires either two transducers of the same type, or one transducer and one mA input. If two transducers are used, all transducer parameters become indexed, and a third level point is calculated.

- DPD (difference) = Point 1 - Point 2
- DPA (average) = (Point 1 + Point 2) / 2. The calculated DPD or DPA is always based on level measurements of points 1 and 2.

For these operations any of three level points (transducer 1, transducer 2, or the calculated point) can be used to trigger relays (see *P110 Level Source* on page 134).

The points must be globally set to either 4 or 5 (as required). Point 3 becomes the calculated value as shown above. See *Rake Control* example on page 69.

Dual Point Model Use

To set a dual point MultiRanger for DPA or DPD functions, Point 3 must be set to either 4 or 5 (as required). Points 1 and 2 cannot be set to 4 or 5, but these points are used to calculate the value in point 3.

This table shows the available functions:

Operation [index]	Available Values
P001 [1]	1, 2, 3, 6, 7
P001 [2]	1, 2, 3, 6, 7
P001 [3]	4,5

P002 Material

Specifies material type.

Primary Index	**Single Point Model**			**Dual Point Model**
	Global			Transducer
Values	1	*	Liquid or horizontal solid surface	
	2		Solid or angled surface	
Alters	• P830 TVT Type			

Parameters

P003 Maximum Process Speed

Determines level change reaction.

Primary Index	Transducer		
Values	1		Slow (0.1 m/min)
	2	*	Medium (1 m/min)
	3		Fast (10 m/min)
Alters	• P070 Failsafe Timer • P700 Max Fill Rate • P701 Max Empty Rate • P702 Filling Indicator • P703 Emptying Indicator • P704 Rate Filter • P710 Fuzz Filter • P713 Echo Lock Window • P727 Scan Delay • P841 Long Shot Number		
Related	• Failsafe (P070 to P072) • P121 Pump by Rate • Rate (P700 to P708) • Measurement Verification (P710 to P713) • Transducer Scanning (P726 to P729) • P905 Transmit Pulse		

Use a setting just fast enough to keep up with your process. Slower settings provide higher accuracy. Faster settings allow for more level fluctuations.

P004 Transducer

Specifies the Siemens Milltronics transducer connected to the unit.

Primary Index	**Single Point Model**		**Dual Point Model**
	Global		Transducer
Values	0	*	No transducer attached (preset for Dual Point)
	1		ST-25
	2		ST-50
	100		STH
	101		XCT-8
	102	*	XPS-10 (preset for Single Point Model)
	103		XCT-12
	104		XPS-15
	112		XRS-5
	250		mA input **[MR 200]**

(chart con't next page)

Parameters

Related (chart cont'd from previous page)	• P203 mA Output Value/Transducer • mA Input (P250 to P260) (related only to Value 250) • P800 Near Blanking • P823 Reform Echo • P832 TVT Shaper Adjust • P840 Short Shot Number • P841 Long Shot Number • P842 Short Shot Frequency • P843 Long Shot Frequency • P844 Short Shot Width • P845 Long Shot Width • P852 Short Shot Range

P005 Units

Specifies measurement units used for dimensional values.

Primary Index	Global		
Values	1	*	Meters
	2		Centimeters
	3		Millimeters
	4		Feet
	5		Inches
Alters	• P006 Empty • P007 Span • P603 Maximum Head • P605 Zero Head • P620 Low Flow Cutoff • P921 Material Measurement • P926 Head Measurement • P927 Distance Measurement		

Changing this value automatically changes the units displayed for many parameters. Existing values are converted and do not have to be re-entered.

P006 Empty

*Enter distance in **units** (P005) from the face of the transducer to the process empty point.*

Primary Index	Transducer
Values	Range: 0.000 to 99.000 m (or equivalent depending on units)
	Preset: 5.000 m (or equivalent depending on units)
Alters	• P007 Span
Altered By	• P005 Units
Related	• P800 Near Blanking • P921 material Measurement • P927 Distance Measurement

Setting this value also sets Span (P007) unless Span was already set to another value. For distance operation (P001=3), Span is preset to Empty.

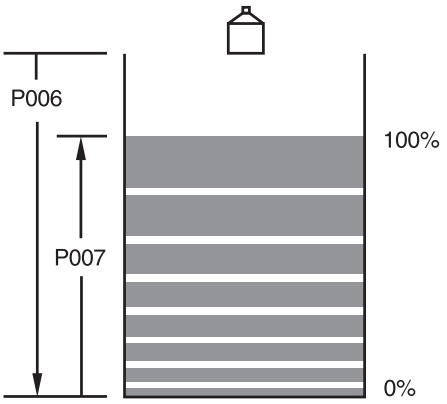

P007 Span

Sets the range levels to be measured.

Primary Index	Level
Values	Range: 0.000 to 99.000 m (or equivalent depending on units)
	Preset: based on Empty (P006)
Alters	• P605 Zero Head • P112 Relay ON Setpoint • P113 Relay OFF Setpoint
Altered By	• P005 Units • P006 Empty
Related	• Volume (P050 to P055) • P800 Near Blanking • P921 Material Measurement • P922 Space Measurement • P926 Head Measurement

Span is preset for a value close to the maximum available. Enter a value reflecting maximum application range.

Always prevent the monitored surface from approaching within 0.3 m (1 ft) of the transducer face as this is the minimum blanking for most Siemens Milltronics transducers (some require more blanking – see your transducer manual).

Many other parameters are set as a percentage of span (even if they are entered in units). The values of these other parameters may change if the span is altered after installation and the other parameters are measured using a level determined upward from the Empty level toward the transducer face.

MultiRanger 200

All volumes are based on span so it should be set for the maximum volume point if volume calculations are needed.

Volume (P050 to P055) [MR 200]

Please note that the volume parameters apply only to the MultiRanger 200.

Use these parameters to enable the MultiRanger to show readings based on vessel or wet well volume (rather than level)..

P050 Tank Shape [MR 200]

Enter the Tank Shape value matching the monitored vessel or wet well.

When Operation is **LEVEL** (P001 = 1), liquid (material) volume is calculated.

Alternatively, when Operation is **SPACE** (P001 = 2), remaining vessel capacity is calculated. In RUN mode, readings are displayed in percent of maximum volume. To convert readings to volumetric units, see *Maximum Volume (P051)*.

Primary Index	Level		
	#	**Shape**	**Description**
Values	0	*	volume calculation not required (preset)
	1	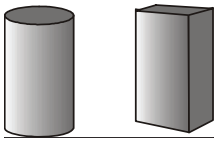	Flat Level Bottom
	2	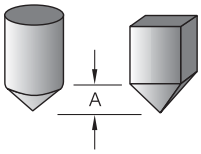	Cone/Pyramid Bottom
	3	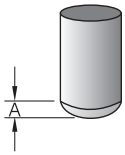	Parabola Bottom
	4	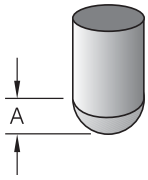	Half Sphere Bottom
	5	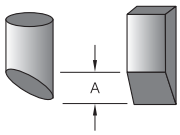	Flat Sloped Bottom
	6		Flat Ends
	7	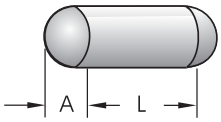	Parabola Ends

Parameters

Values	8	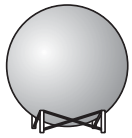	Sphere
	9	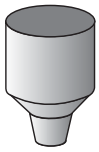	Universal Linear
	10	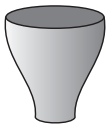	Universal Curved
Alters	• P001 Operation • P051 Maximum Volume • Pump Efficiency (P180-P186) • Pumped Volume Totalizer (P622-P623) • P920 Reading Measurement		

P051 Maximum Volume [MR 200]

For Readings in volumetric units (rather than percent), enter the equivalent vessel volume for Span (P007).

Primary Index	Level
Values	Range: 0.000 to 99999
	Preset: 100.0
Alters	P060 Decimal Position
Related	• P006 Empty • P007 Span • P924 Volume Measurement

Any volume units can be chosen because volume is calculated from empty to maximum span and is scaled according to the Tank Shape (P050) value.

Note: Make sure selected chosen units allow LCD volume display.

Examples:

- If max. volume = 3650 m^3, enter 3650
- If max. volume = 267500 gallons, enter 267.5 (thousands of gallons)

P052 Tank Dimension A [MR 200]

Dimension A as used in P050 Tank Shape.

Primary Index	Level
Values	Range: 0.0 to 99.00 m (or equivalent depending on units)
	Preset: 0.000
Related	• P050 Tank Shape

Enter one of the following:

- height of the tank bottom if P050 = 2,3,4, or 5

OR

- length of one end section of the tank if P050 = 7, in Units (P005)

P053 Tank Dimension L [MR 200]

Dimension L as used in P050 Tank Shape.

Primary Index	Level
Values	Range: 0.0 to 99.00 m (or equivalent depending on units)
	Preset: 0.000
Related	• P050 Tank Shape

Enter the following:

- tank length (excluding both end sections) if P050 = 7

P054 Level Breakpoints (Universal Volume Calculation) [MR 200]

When the tank shape is too complex for any of the preconfigured shapes, you can specify the volume based on segments. See "Accessing a Secondary Index" on page 117 for more information.

Primary Index	Level
Secondary Index	Breakpoint
Values	Range: 0.0 to 99.00 m or Max. volume (P051) (or equivalent depending on units)
Related	• P055 Volume Breakpoints

Enter the following:

- up to 32 level breakpoints (where volume is known) if P050 = 9 or 10

Entering a Level Breakpoint

1. Go to Parameter P054.
2. For each index enter a breakpoint in measurement units.
3. Ensure that each breakpoint corresponds to the same index for P055.

P055 Volume Breakpoints and Characterization (Universal Volume Calculation) [MR 200]

Each segment defined by the level breakpoints (P055) requires a volume so that the MultiRanger can make the level-to-volume calculations.

Primary Index	Level
Secondary Index	Breakpoint
Values	Range: 0.0 to 99999
Related	• P054 Breakpoints Levels (Universal Volume Calculation)

Typical volume calculations

Cone

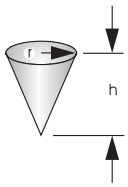

$V = (1/3)\pi r^2 h$

Cylinder

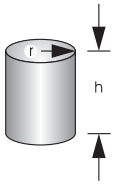

$V = \pi r^2 h$

Entering a Volume Breakpoint

1. Go to Parameter P055.
2. For each index enter a volume.
3. Ensure that each volume corresponds to the same index for P054.

For more on *Volume Characterization*, go to page 52.

Display and Reading (P060 to P062)

These parameters are used to:

- Change the number of decimal places displayed
- Convert the Reading to alternate units
- Reference measurements to other than Empty (P006) or Span (P007)

P060 Decimal Position

Defines the maximum number of decimal places used on the LCD.

Primary Index	Level		
Values	0		No digits after the decimal point
	1		1 digit after the decimal point
	2	*	2 digits after the decimal point
	3		3 digits after the decimal point (limited by device resolution)

Alters		• P607 Flowrate Decimal
Altered by		• P051 Maximum volume
Related		• P920 Reading Measurement

In RUN mode, the decimal position adjusts to prevent the number of digits from exceeding the display capabilities. To keep the decimal place from shifting, reduce the number of decimal places to that shown at 100%.

Example:

If 100% is 15m, use two decimal places for sample readings of 15.00 or 12.15.

P061 Convert Reading [MR 200]

Multiplies the current value by the specified amount to allow for scaling.

Primary Index	Level
Values	Range: -999 to 9999
	Preset: 1.000
Related	• P920 Reading Measurement

Examples:

- If the measured value is in feet, enter **0.3333** to display the number of yards
- For simple linear, volume conversions set P005 to **1** (meters) and then enter the volume measurement per unit to get the correct conversion. For example, if the reservoir contains 100 litres per vertical meter, use **100** to get the reading in litres.

Notes:

- This method does not calculate volume. It must not be used in place of the volume parameters if any volume dependent features (such as pump efficiency) are used. To calculate true volumes see *Volume* (P050 to P055).
- Avoid entering a value that, when multiplied by the maximum current Reading, exceeds the display capabilities. If value exceeds four digits, **EEEE** is shown.

P062 Offset Reading

Adds the specified value to the level reading, usually to reference the reading to sea level or another datum level.

Primary Index	Level
Values	Range: -999 to 9999
	Preset: 0.000
Related	• P920 Reading Measurement

The operation of the device is not affected by the Offset Reading. This value is used for display purposes only. All control measurements are still referenced to Empty.

Backup Level Override

Use this feature to override the ultrasonic reading by a discrete input such as a contacting point device. The ultrasonic reading will be fixed at the programmed switch level until the discrete input is released.

The ultrasonic device makes decisions based on the override values.

P064 Reading Override Enable

Sets the discrete input to act as the source for a level reading override.

Primary Index	Transducer		
Values	0	*	OFF: No override.
	1-2		ON: Number = discrete input of override signal
Related	• P065 Reading Override Value • P270 Discrete Input Function		

P065 Reading Override Value

This value is substituted for the current reading when the selected discrete input is enabled and activated.

Primary Index	Transducer
Values	Range: 0.0 to 99.00 m (or equivalent depending on units)
	Preset: 0.00
Alters	Current reading
Related	• P001 Operation • P005 Units • P006 Empty • P007 Span • P064 Override Enable

Please note the following:

- enter value in current units (as selected in P005)
- valid for level, space, and distance
- volume is calculated based on the Backup level

Example:

Transducer One is configured for a level measurement. Digital Input 2 is connected to a Hi Level Backup switch located a level of 4.3m.

Parameter	Index	Value
P064	1	2
P065	1	4.3

When the level rises to 4.3m, and the switch is activated, the reading is forced to 4.3m. The reading stays at 4.3m until the switch is de-activated.

P066 Override Time Delay

Defines the time used to calm (debounce) the override condition input. Set in seconds.

Primary Index	Transducer
Values	Range: 0.0 to 9999 Preset: 5.0
Related	• P064 Override Enable • P065 Reading Override Value • P270 Discrete Input Function

Note: Activation of the Level Override is subject to the measurement cycle. This can add up to four seconds to the overall response time depending on operating conditions and programming.

P069 Password

*Holds the current password for P000. Select by typing in **069**. You cannot scroll to this parameter.*

Primary Index	Global
Values	Range: 0 to 9999 Default: 1954
Related	• P000 Lock

This parameter is write-only, and can only be selected by entering **069**. To change the password, unlock the device by entering the current password into P000. Then enter the new password into P069. To lock the device, enter a password other than the correct one in P000. While the device is unlocked, the password is visible in P000.

Failsafe (P070 to P072)

P070 Failsafe Timer

The time for invalid measurements to elapse before Failsafe State activates.

Primary Index	Single Point Model	Dual Point Model
	Global	Transducer
Values	Range: 0 to 15 minutes	
	Preset 10.00 minutes	
Altered by	• P003 Maximum Process Speed	
Related	• P129 Relay Failsafe	

Once activated, the Failsafe State initiates the following:

1. The material level is reported based on P071 Failsafe Material Level.
   - The unit responds to the new level as programmed (control and alarm relays activate as defined by the programming).
   - Individual relays can have independent failsafe responses. See *P129 Relay Failsafe*.
2. The appropriate error is displayed:
   - **LOE** for loss of echo from the transducer
   - **Short** for a shorted transducer cable
   - **Open** for a cut transducer cable
   - **Error** for all other problems

When modifying the preset value, set it short enough to protect the process but long enough to avoid false alarms. Only use **No Delay (0.0 Minutes)** for testing.

P071 Failsafe Material Level

The material level reported when a Failsafe State is initiated.

Primary Index	Level		
Values	Range: -4999 to 9999		Value in units or % (-50% to 150% of span)
	HI		Level goes to maximum span
	LO		Level goes to 0 span (Empty)
	HOLd	*	Level remains at last reading
Related	• P001 Operation • P006 Empty • P007 Span • P111 Relay Control Function • P112 Relay ON Setpoint • P113 relay OFF Setpoint • P129 Relay Failsafe		

Select the Failsafe Material Level based upon the relay operation required during failsafe operation.

Selecting HI, LO, or HOLd

1. Press FUNCTION [%] to display the Auxiliary Function symbol.
2. Press ARROWS [▲] [▼] to scroll to the desired option.
3. Press ENTER [↵] to set the value.

Entering a Measurement

To enter a specific Failsafe Material Level within -50 to 150% of Span (P007), in Units (P005).

Relay reaction

The way in which relay programming reacts to the failsafe level depends on P129 Relay Failsafe (page 140). By default:

- Alarm relays have P129 = OFF and so react to the Failsafe Material Level.
- Control relays have P129 = **dE** and so de-energize the relay when the unit enters Failsafe mode regardless of the Failsafe Material Level.

P072 Failsafe Level Advance

Sets the speed the MultiRanger advances to and returns from the Failsafe Material Level.

Primary Index	Level			
Values	1	*	Restricted	Advances to/from Failsafe Material Level as set by P003, P700 and P701.
	2		Immediate	Failsafe Material Level assumed right away
	3		Fast Back	Failsafe Level Advance is restricted, return is immediate
Related	• P003 Maximum Process Speed • P070 Failsafe Timer • P071 Failsafe Material Level • P700 Max Fill rate • P701 Max Empty rate			

Relays (P100 to P119)

The MultiRanger has three or six relays (or digital outputs) used to control devices and alarms. While the number of devices is limited by the relays, all control functions are accessible through software and each parameter is indexed to the three or six relays. See the *Relay* section on page 41.

Preset Applications (P100)

The MultiRanger makes standard applications easier to program by providing an extensive list of presets.

Control Functions (P111)

Each relay can be configured independently to take advantage of the MultiRanger's advanced features and flexibility. Start with a preset application and then change the required parameters to make the task more efficient.

Setpoints (P112, P113)

Each relay is triggered by one or more setpoints. The setpoints can be based on absolute level (P112, P113) or rate of change (P702, P703). Each control function specifies which setpoints are required.

P100 Preset Applications [MR 200]

Six preset applications to configure or bench test the unit.

Primary Index	Global		
Values	0	*	OFF
	1		Wet Well 1
	2		Wet Well 2
	3		Reservoir 1
	4		Reservoir 2
	5		Screen
	6		Alarms
Alters	• P110 Level Source • P111 Relay Control Function • P112 Relay On Setpoint • P113 Relay OFF Setpoint • P121 Pump by Rate		
Related	• P001 Operation		

Select an application that is similar to yours and change the parameters required. If none suit, then refer to P111 Relay Control Function on page 134.

Note: Programming the relays independently is the most common method used.

P110 Level Source

Sets the level source on which the indexed relay is assigned to a measurement point.

Please note that Difference and Average settings are MultiRanger 200 features.

Primary Index	Relay		
Values	Range: 1 to 3		
	1	*	Point # 1 = Transducer One
	2		Point # 2 = Transducer Two
	3 [MR 200]		Point # 3 = Difference (P001=4) or Average (P001=5) **[MR 200]**
Altered by:	• P003 Maximum Process Speed • P700 Max Fill rate • P701 Max Empty rate • P070 Failsafe Timer • P071 Failsafe Material Level		

MultiRanger 200

Please note that these features are only available on the MultiRanger 200.

In Single Point Mode (standard):

Points 2 and 3 are available only if Operation is set for **difference** or **average** (P001 = 4 or 5).

In Dual Point Mode (optional):

Point 2 is always available, and Point 3 is available only if Operation is set for **difference** or **average** (P001 = 4 or 5).

P111 Relay Control Function

Sets the control algorithm used to trip the relay.

Please note that parameter P111 values vary between the MultiRanger 100 and the MultiRanger 200.

Primary Index	Relay
Values	See chart below
Altered by	• P100 Preset Applications

Use zero **0** (preset) to disable control of the indexed relay.

Note: All relay ON/OFF points must be referenced from Empty (P006), regardless of Operation Mode selection (POO1).

MultiRanger 100

Values For P111			
Control	**Type**	**#[1]**	**Relay Control**
General	OFF	0*	Relay set off, no action (preset)
	Level	1	Based on level setpoints ON and OFF
	Loss of Echo (LOE)	6	When echo is lost
	Cable Fault	7	When the circuit to a transducer is opened
Pump	Fixed Duty Assist	50	At fixed ON and OFF setpoints and allows multiple pumps to run
	Alternate Duty Assist	52	At rotating ON and OFF setpoints and allows multiple pumps to run
	Communication	65	Based on input from external communications. See *Communications* section on page 89 for further reference.

1. When reading and setting this parameter through Modbus or SmartLinx communications the parameter values are mapped to different numbers. See *MultiRanger Communications* on page 89 for Modbus information or the relevant SmartLinx® manual.

MultiRanger 200

Values For P111			
Control	**Type**	**#[1]**	**Relay Control**
General	Off	0*	Relay set off, no action (preset)
	Level	1	Based on level setpoints ON and OFF
	In Bounds	2	When level enters the range between ON and OFF setpoints
	Out of Bounds	3	When level exits the range between ON and OFF setpoints
	Rate of Change	4	Based on rate setpoints ON and OFF
	Temperature	5	Based on temperature setpoints ON and OFF
	Loss of Echo (LOE)	6	When echo is lost
	Cable Fault	7	When the circuit to a transducer is opened
Flow	Totalizer	40	Every 10^y units (P641-P645)
	Flow Sampler	41	Every **y x 10^2** units (P641-P645) or time duration (P115)

Values For P111			
Control	**Type**	**#[1]**	**Relay Control**
Pump	Fixed Duty Assist	50	At fixed ON and OFF setpoints and allows multiple pumps to run or for rake control
	Fixed Duty Backup	51	At fixed ON and OFF setpoints and allows only one pump to run
	Alternate Duty Assist	52	At rotating ON and OFF setpoints and allows multiple pumps to run
	Alternate Duty Backup	53	At rotating ON and OFF setpoints and allows only one pump to run
	Service Ratio Duty Assist	54	On service ratio at ON and OFF setpoints and allows multiple pumps to run
	Service Ratio Duty Backup	55	On service ratio at ON and OFF setpoints and allows only one pump to run
	First In First Out (FIFO)	56	As Alternate Duty Assist, resets the relay from staggered OFF setpoints
Control	Flush Valve	64	Used to control a pump flushing device based on Flush Systems (P170 to P173)
	Communication	65	Based on input from external communications. See *Communications* section on page 89 for further reference.

1. When reading and setting this parameter through Modbus or SmartLinx communications the parameter values are mapped to different numbers. See the *MultiRanger Communications* section on page 89 for Modbus information or the relevant SmartLinx® manual.

P112 Relay ON Setpoint

Sets the process point at which the relay changes from its NORMAL state.

Primary Index	Relay
Values	Range: -999 to 9999
	Preset: **----**
Altered by	• P007 Span
Related	• P100 Preset Applications • P111 Relay Control Function • P113 Relay OFF Setpoint

For most applications, the relay is tripped at this point. For IN-BOUNDS and OUT-OF-BOUNDS alarms, it is the high point in the specified range. This parameter is set according to Span (P007) even when another reading, such as volume, is shown on the LCD.

P113 Relay OFF Setpoint

Sets the process point at which the relay returns to its NORMAL state.

Primary Index	Relay
Values	Range: -999 to 9999
	Preset: **----**
Altered by	• P007 Span
Related	• P100 Preset Applications • P111 Relay Control Function • P112 Relay ON Setpoint

For most applications, the relay is reset at this point. For IN-BOUNDS and OUT-OF-BOUNDS alarms, it is the low point in the specified range. This parameter is set to Span (P007), even when another reading, such as volume, is shown on the LCD.

P115 Relay Interval Setpoint [MR 200]

The length of time in hours between starts.

Primary Index	Relay
Values	Range: 0 to 9000 hours
	Preset: 0.000
Altered by	• P100 Preset Applications
Related	• P111 Relay Control Function

P116 Dead Band [MR 200]

The distance above and below the bound alarm setpoints.

Primary Index	Relay
Values	Range: 0.000 to Span Value (P007), or equivalent depending on units
	Preset: 2% of span
Related	• P111 Relay Control Function • P112 Relay ON Setpoint • P113 Relay OFF Setpoint

For IN-BOUNDS and OUT-OF-BOUNDS Relay Functions (P111 = 2 and 3 respectively), a dead band prevents relay chatter due to material level fluctuations at both the upper and lower setpoints.

Enter the dead band in either percent of span or units of measure (P005). The dead band value is applied both above and below the upper and lower bound setpoints as shown in the figure.

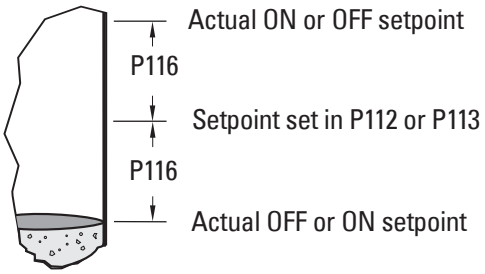

P118 Relay Output Logic

The logic applied to relays to determine the contact open or closed state.

Primary Index	Relay				
Values	**Value**		**Logic**	**Alarm Contact**	**Pump or Control Contact**
	2	*	Positive	Normally Closed	Normally Open
	3		Negative	Normally Open	Normally Closed
Related	• P111 Relay Control Function				

The relay contact operation is NORMALLY CLOSED for alarms and NORMALLY OPEN for controls. See P111 *Relay Control Function* for more information.

Note: P118 is not reset by a master reset (P999).

Power Failure

When power is cut to the MultiRanger, its relays fail to the following states:

Relay States	
Relay	Fail State
1,2,4,5	Open
3,6	Open or Closed[1]

1. Relays 3 and 6 are Form C types, so you can wire it either NORMALLY OPEN or NORMALLY CLOSED. Check the wiring before programming.

To use relays 3 or 6 as general alarm indicators, set P118 to **3 – negative logic** and wire the alarm for normally open operation. When an alarm event occurs (see below) or when power is cut, the circuit closes and the alarm activates.

Positive Logic

In software, all relays are programmed the same way, with ON setpoints indicating when to change the relay contact state (open or closed). This parameter allows the reversal of the operation so that relay contacts can be NORMALLY CLOSED or NORMALLY OPEN. P118 is preset to **2** which is positive logic.

Negative Logic

When P118 = 3 (negative logic), the operation for the indexed relay is reversed from normal.

P119 Relay Logic Test

Forces the relay control logic into an ACTIVATED or DE-ACTIVATED state.

Primary Index	Relay		
Values	0	*	OFF - Control from MultiRanger algorithms
	1		Activate relay control
	2		De-activate relay control
Related	• P111 Relay Control Function • P910 Toggle Relays		

This parameter tests site wiring and control logic programming. Forcing the relay to an activated or de-activated state is similar to the MultiRanger detecting an event and responding to it. Helpful in testing new installations and diagnosing control problems.

Pump Setpoint Modifiers (P121 and P122) [MR 200]

Please note that these parameters apply to the MultiRanger 200 only.

These parameters provide alternate ways of starting the pumps in the pump group. See the *Pump Control* section on page 58 for descriptions of the pump control algorithms.

P121 Pump by Rate [MR 200]

Sets the pump relays to accept control by rate of level change once the first ON setpoint is reached.

Primary Index	**Single Point Model**		**Dual Point Model**
	Transducer		Level
Values	0	*	OFF (pump by level)
	1		ON (pump by rate)
Related	• P007 Span • P111 Relay Control Function • P132 Pump Start Delay • Rate (P700 to P708)		

Use this function when multiple pumps are to be controlled by rate of level change rather than by setpoints.

The delay between pump starts is set by P132 Pump Start Delay.

This only applies to any relays set to pump control (P111 = 50 to 56).

Notes:
- All pump control relay ON and OFF setpoints must be the same value
- If the level is within 5% of Span (P007) of the OFF setpoint, the next pump is not started

P122 Pump Service Ratio [MR 200]

Selects pump usage based on the RUN time ratio rather than last used.

Primary Index	Relay
Values	Range: 0.000 to 9999
	Preset: 20.00
Related	• P111 Relay Control Function

This parameter only relates to relays with P111 = 54 or 55.

To make this parameter useful, assign it to all of the pump relays. The number assigned to each pump relay represents the ratio applied to decide the next pump to start or stop.

Notes:
- The MultiRanger will not sacrifice other pumping strategies to ensure that the ratio is held true
- If the pump relays are set to the same value then the ratio equals 1:1 and all pumps are used equally (preset)

Independent Relay Failsafe (P129)

P129 Relay Failsafe

Sets how individual relays react to a failsafe condition, to allow for more flexible programming.

Primary Index	Relay		
Values	OFF	*	Response governed by P071 Failsafe Material Level
	HOLd		For LAST KNOWN relay state retention
	dE		To have the relay de-energize immediately on failsafe
	En		To have the relay energize immediately on failsafe
Altered by	• P071 Failsafe Material Level		
	• P070 Failsafe Timer • P111 Relay Control Function		

Use this for operations independent of the Failsafe Material Level (P071).

Relay Failsafe is only available for the following relay functions (P111) and is not used for any other relay control function.

Relay Function (P111)	Preset (P129)
1 – level alarm	OFF
2 – in bounds alarm	
3 – out of bounds alarm	
4 – rate of change alarm	
5 – temperature alarm	
50 to 56 – all pump controls	dE

To select an independent Relay Failsafe value:

1. Press FUNCTION [%] to display the Auxiliary Function symbol.
2. Press ARROWS [▲] [▼] to scroll through the failsafe options.
3. Select option and press ENTER [↵].

Advanced Pump Control Modifiers (P130 to P137) [MR 200]

Please note that these parameters apply to the MultiRanger 200 only.

These parameters only affect relays set to pump operation (P111 = 50 to 56).

P130 Pump Run-On Interval [MR 200]

Sets the number of hours between pump run-on occurrences.

Primary Index	Global
Values	Range: 0.000 to 1000
	Preset: 0.000
Related	• Advanced Pump Control Modifiers (P130 to P136)

To clear sediment in a **pump-down** wet well, run the pump after the normal OFF setpoint is reached to force some solid material through. This parameter sets the time between such events. Only the last pump running can run-on.

P131 Pump Run-On Duration [MR 200]

Sets the number of seconds that the pump runs on.

Primary Index	Relay
Values	Range: 0.0 to 9999
	Preset: 0.000
Related	• Advanced Pump Control Modifiers (P130 to P136)

Your pump capacity determines the amount of material that can be removed. Choose a value long enough to clean out the vessel bottom, yet short enough not to run the pump dry. Also be sure that this value does not overlap with P130 (Interval). The timing should look something like this:

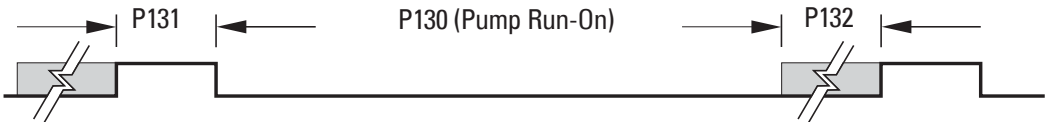

P132 Pump Start Delay [MR 200]

Sets the minimum delay (in seconds) between pump starts.

Primary Index	Global
Values	Range: 0.0 to 9999
	Preset: 10 seconds
	Value is divided by 10 in simulation mode.
Related	• Advanced Pump Control Modifiers (P130 to P136) • P121 Pump by Rate

Use this feature to reduce a power surge from all pumps starting at the same time. This delay determines when the next pump is permitted to start.

P133 Pump Power Resumption Delay [MR 200]

Sets the minimum delay before the first pump restarts after power failure.

Primary Index	Global
Values	Range: 0.000 to 9999
	Preset: 10 seconds
Related	• Advanced Pump Control Modifiers (P130 to P136) • P132 Pump Start Delay

This reduces the surge from the first pump starting immediately on power resumption. When this delay expires, other pumps will start as per P132.

P136 Wall Cling Reduction [MR 200]

Varies the upper and lower setpoints to reduce material buildup on the walls.

	Single Point Model	Dual Point Model
Primary Index	Global	Transducer
Values	Range: 0.000 to 9999	
	Preset: 0.000	

This value is the range in which the setpoints are allowed to deviate in percent or units. The Relay Setpoints ON and OFF values are randomly varied inside the range to ensure that the material level does not consistently stop at the same point.

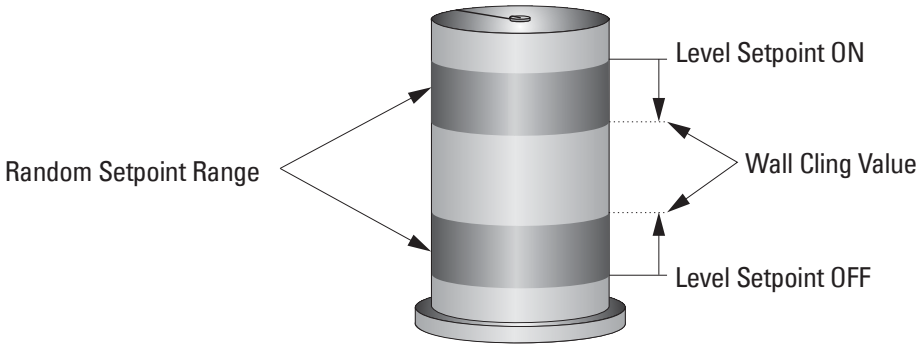

P137 Pump Group [MR 200]

Puts pumps into groups for multiple pump rotations on one transducer.

Primary Index	Relay		
Values	Range: 1 to 2		
	1	*	group 1
	2		group 2
Alters	• P111 Relay Control Function when P111=52 (Alternate duty assist) or 53 (Alternate duty backup)		

This feature groups pumps (relay points 1 - 6) into groups 1 or 2. It is applied to pump rotation and occurs independently within each group.

Flush Systems (P170 to P173) [MR 200]

Please note that these parameters apply to the MultiRanger 200 only.

Use this feature to control an electrically operated flush valve on a pump to divert some pump output back into the wet well to stir up sediment.

Notes:

- If any of the following parameters are set to **0**, this feature will not work.
- In Dual Point mode, a flush valve can be set up for each of the three available level inputs (P001 = **4** or **5**).

Single Point Mode

Enter the MultiRanger relay number of the pump with the flush valve. The activation of this pump relay drives the usage of the flush system. Both P172 Flush Interval and P171 Flush Cycles are based on the operation of this relay and control any relay set to P111 = 64, Flush Valve.

Dual Point Mode

The indexed relay is the one that controls the flush device. The value is the pump relay that is watched by the flush system. Enter the pump relay value into the parameter at the flush relay index.

Example

If you need to watch pump Relay One to control a flush valve on Relay Two you would set P170[2]=1.

P170 Flush Pump [MR 200]

Picks the number of the pump relay which triggers the flushing device.

	Single Point Model	Dual Point Model
Primary Index	Global	Relay
Values	Range: 0 to 6	
	Preset: 0	
Related	• P111 = 64, Flush Valve	

Enter the MultiRanger relay number of the pump with the flush valve. The activation of this pump relay drives the usage of the flush system. Both P172 Flush Interval [MR 200] and P171 Flush Cycles [MR 200] are based on the operation of this relay and controls any relay set to P111 = 64, Flush Valve.

P171 Flush Cycles [MR 200]

Sets the number of pump cycles requiring flush control.

	Single Point Model	Dual Point Model
Primary Index	Global	Relay
Values	Range: 0 to 9999	
	Preset: 0	
Related	• P111 = 64, Flush Valve	

If three flush cycles are required after every ten pump cycles then:

P172 (Flush Interval) = **10**
P171 (Flush Cycles) = **3**

P172 Flush Interval [MR 200]

Sets the number of pump cycles before flush control is enabled.

	Single Point Model	Dual Point Model
Primary Index	Global	Relay
Values	Range: 0 to 9999	
	Preset: 0	
Related	• P111 = 64, Flush Valve	

To start a new flush cycle every ten times the pumps are run, set this to **10**.

P173 Flush Duration [MR 200]

The length of time for each flush cycle that the flush control is active.

	Single Point Model	Dual Point Model
Primary Index	Global	Relay
Values	Range: 0.000 to 9999 s	
	Preset: 0.000	
Related	• P111 = 64, Flush Valve	

mA Output (P200 to P219)

P200 mA Output Range

Determines the mA output range.

Primary Index	mA output		
Values	0		off
	1		0 to 20 mA
	2	*	4 to 20 mA
	3		20 to 0 mA
	4		20 to 4 mA
Related	• P911 mA Output Value		

If either **1** or **2** is selected, the mA output is directly proportional to the mA Function. If either **3** or **4** is selected, then the output is inversely proportional. After setting P200, verify that P212 has a valid entry for mA Output Min Limit, as P212 is not changed automatically by a change to P200.

P201 mA Output Function

Alters the mA output/measurement relationship.

Please note that parameter P201 values vary between the MultiRanger 100 and the MultiRanger 200.

MultiRanger 100

Primary Index	mA output		
Values	value	mA function	Operation (P001)
	0	OFF	
	1	level	level
	2	space	space
	3	distance	distance
Related	• P202 mA Output Allocation • P911 mA Output Value		
Altered By	• P001 Operation		

MultiRanger 200

Primary Index	mA output		
Values	value	mA function	Operation (P001)
	0	OFF	
	1	level	level, differential, or average
	2	space	space
	3	distance	distance
	4	volume	level or space
	5	flow	OCM
	6	head	
	7	volume rate	
	8	mA input	
	9	comms input	
Related	• P202 mA Output Allocation • P911 mA Output Value		
Altered By	• P001 Operation		

P202 mA Output Allocation

Sets the input source from which the mA output is calculated.

Please note that parameter P202 values vary between the MultiRanger 100 and the MultiRanger 200.

MultiRanger 100

Primary Index	mA output		
Values	1	*	Point 1
	2		Point 2
	1:2		Average of readings from Point 1 and Point 2
Related	• P201 mA Output Function		

MultiRanger 200

Primary Index	mA output		
Values	1	*	Point 1
	2		Point 2
	1:2		Average of readings from Point 1 and Point 2
	3		Point 3
Related	• P201 mA Output Function		

Enter the Point Number the mA output is based on. This value depends on whether mA function (P201) is set as transducer or mA input.

For a single point device, if P201 uses a transducer, parameter P202 can only be altered if P001 (Operation) is set for DPD or DPA.

P202 can be set to a particular point or range of points. When set to a range of points, the mA output will be the average of the readings from all in service transducers in the range. Out of service transducers will be ignored.

If P202 mA Output Allocation End contains the value 0, then only 1 transducer has been assigned to the mA output.

P203 mA Output Value / Transducer

Displays current mA output value for the Point Number.

Primary Index	Level
Values	Range: 0.000 to 22.00 (view only)

This displays as an Auxiliary Reading when 5 mA key is pressed in the RUN mode and does not include adjustments made using Trim features (P214 / P215).

P203 holds the mA value associated with a transducer. This value is used for run mode display of the mA output. When only one mA output is associated with a transducer, this parameter holds the value of that mA output. When more than one transducer is associated with a mA output (set via P202), P203 holds the mA output calculated from the resulting average of the associated transducer readings. When more than one mA output is associated with a transducer, P203 holds the value of the first mA output associated with the transducer.

Note: This parameter is applicable only if any mA output has the transducer Point Number as its input source (see P201 and P202).

Independent mA Setpoints (P210 and P211)

Use these features to reference the minimum and/or maximum mA output to any point in the measurement range.

P201—mA Function Settings	Action
Level, Space, or Distance	Enter the material level in Units (P005) or percent of Span (P007) as referenced to Empty (P006).
Volume [MR 200]	Enter the volume in Max Volume (P051) units or as a percent of Max Volume.
Flow [MR 200]	Enter the flowrate in OCM Max Flow (P604) units or as a percent of OCM Max Flow.
Head [MR 200]	Enter the head in level units (P005) or percent of Max Head (P603).
Volume Rate [MR 200]	Enter the volume rate in volume/min. Ensure the % symbol is displayed before attempting to enter a % value.
mA input or Communications Input	Not Applicable

P210 0/4 mA Output Setpoint

Sets the process level corresponding to the 0 or 4mA value.

Primary Index	mA output
Values	Range: -999 to 9999
Related	• P211 20 mA Output Setpoint

Enter the value (in applicable units or %) to correspond to 0 or 4 mA.

P211 20 mA Output Setpoint

Sets the process level that corresponds to the 20 mA value.

Primary Index	mA output
Values	Range: -999 to 9999
Related	• P210 0/4 mA Output Setpoint

Enter the value (in applicable units or %) to correspond to 20 mA.

mA Output Limits (P212 and P213)

Use these features to adjust the minimum and/or maximum mA output values, which should suit the input limit requirements of the external device.

P212 mA Output Min Limit

Sets the minimum mA output value (in mA) to be produced.

Primary Index	mA output
Values	Range: 0.000 to 22.00
	Preset: 3.8
Related	• P200 mA Output Range • P213 mA Output Max Limit

P213 mA Output Max Limit

Sets the maximum mA output value (in mA) to be produced.

Primary Index	mA output
Values	Range: 0.000 to 22.00
	Preset: 20.2 mA
Related	• P200 mA Output Range / P212 mA Output Min LImit

mA Output Trim (P214 to P215)

This does not affect the P203 value shown, and is used when recalibration of an external device is impractical.

To adjust the value so that the device correctly indicates 4.00 (when P214 is accessed) or 20.00 mA (when P215 is accessed):

1. Attach ammeter to MultiRanger 4 to 20 mA output.
2. Access P214, Index 1 (for mA output 1) or 2 (for mA output 2). Press CLEAR and ENTER [C] [↵]. The ammeter should show a value near 4 mA.
3. Enter the exact value displayed on the ammeter into P214 (Index 1 or 2).
4. The ammeter should then read exactly 4.00 mA.
5. Repeat steps 1 to 4 to set P215, using 20 mA as the desired value.

P214 4 mA Output Trim

Calibrates the 4 mA output.

Primary Index	mA output
Values	Preset: 4.00
Related	• P215 20 mA Output Trim

Adjust this value so the device indicates 4.000 mA when P214 is accessed.

P215 20 mA Output Trim

Calibrates the 20 mA output.

Primary Index	mA output
Values	Preset: 20.00
Related	• P214 4mA Output Trim

Adjust this value so the device indicates 20.00 mA when P215 is accessed.

mA Output Failsafe (P219) [MR 200]

Please note that this parameter applies to the MultiRanger 200 only.

P219 mA Output Failsafe [MR 200]

Use for failsafe operation, independent of the Failsafe Material Level (P071).

Primary Index	mA output		
Values	Range: 0.000 to 22.00		
	OFF	*	mA output responds to Failsafe Material Level (P071).
	HOLd		last **known** value is held until normal operation resumes
	LO		produce the **Empty** mA output immediately
	HI		produce the **Span** mA output immediately
Related	• P201 mA Output Function		

Selecting an independent mA Failsafe option:

1. Press MODE [%] to display the Auxiliary Function symbol.
2. Press ARROWS [▲] [▼] to scroll access the failsafe options.
3. Press ENTER [↵] when the desired option displayed.

Or, to produce an mA output at a specific value, enter the value required. This is used only if mA output is allocated to a transducer (P201 = 1 to 7).

mA Input (P250 to P260) [MR 200]

Please note that these parameters apply to the MultiRanger 200 only.

P250 mA Input Range [MR 200]

Shows the mA input range of the connected mA device.

Primary Index	Global		
Values	1		0 to 20 mA
	2	*	4 to 20 mA

Ensure this range corresponds to the output range of the external device. All level measurements will equate % of Span with the % of the mA range.

P251 0 or 4 mA Input Level [MR 200]

Shows the process level corresponding to the 0 or 4 mA value.

Primary Index	Global
Values	Range: -999 to 9999%
	Preset: 0%
Related	• P006 Empty • P007 Span

When using an external mA signal to determine level, the input range must be scaled to give accurate results.

P252 20 mA Input Level [MR 200]

Shows the process level corresponding to the 20 mA value.

Primary Index	Global
Values	Range: -999 to 9999%
	Preset: 100%
Related	• P006 Empty • P007 Span

Input range is scaled for accuracy if an external mA signal calculates level.

P253 Input Filter Time Constant [MR 200]

Shows the time constant used in the mA input filter to dampen signal fluctuations.

Primary Index	Global
Values	Range: 0 to 9999
	Preset: 1

This number in seconds is used in the damping calculations. Larger values damp more than smaller values and **0** disables the signal filter.

P254 Scaled mA Input Value [MR 200]

Shows the resulting level value after scaling.

Primary Index	Global
Values	Range: -999 to 9999% (view only)
	Preset: calculated from the input mA signal

This parameter is calculated from the input mA signal.

P260 mA Raw Input [MR 200]

Shows the raw mA input supplied by the external device.

Primary Index	mA input
Values	Range: 0.000 to 20.00 (view only)

Discrete Input Functions (P270 to P275)

Discrete inputs can be used for the following:

- Passing other information to a remote system through communications
- Backup level override

Use the parameters listed above to have discrete inputs modify the unit's operation.

Use the following parameters to configure the discrete input itself.

See also the *Pump Control* section on page 58 for a description of the MultiRanger's pump control algorithms, including how the discrete inputs alter its operation.

P270 Discrete Input Function

Sets how discrete signals are interpreted by the MultiRanger.

Primary Index	Discrete input		
Values	0		Forced **OFF**
	1		Forced **ON**
	2	*	Normally Open – 0 (DI open), 1 (DI closed)
	3		Normally Closed – 0 (DI closed), 1 (DI open)
Related	• Pump Control section		

P275 Scaled Discrete Input Value

Shows the current value of the discrete input after any scaling is applied.

Primary Index	Discrete input	
Values	Display: view only	
	Values: dependent on the function of the discrete input	
	Range of Values	**Function (P270)**
	1	Forced **ON**
	0	Forced **OFF**
	0 (DI open), 1 (DI closed)	Normally Open
	0 (DI closed), 1 (DI open)	Normally Closed

Readings are updated continuously even in PROGRAM mode. The value signals a level override event.

Standard Data Logging (P300 to P321)

All records can be reset by pressing the CLEAR C ↵ keys.

Record Temperatures (P300 to P303)

These features display the high and/or low temperatures in °C. When a parameter relating to a TS-3 Temperature Sensor is accessed, the Point Type display changes to the TS-3 symbol .

If the unit is powered up without a temperature sensor connected, the value –50°C is displayed. This information can help trace problems with both built in and external temperature sensors.

P300 Temperature, Transducer Maximum

Shows the highest temperature encountered, as measured by the temperature sensor in the transducer (if applicable).

Primary Index	Transducer
Values	Range: - 50 to 150°C (view only)
	Preset: - 50°C
Related	• P301 Temperature, Transducer Min

Press CLEAR [C] [↵] keys to reset the log after a short circuit on the transducer wiring.

P301 Temperature, Transducer Minimum

View the lowest temperature encountered, as measured by the temperature sensor in the transducer (if applicable).

Primary Index	Transducer
Values	Range: - 50 to 150°C (view only)
	Preset: 150°C
Related	• P300 Temperature, Transducer Max

Press CLEAR [C] [↵] keys to reset the log after an open circuit on the transducer wiring.

P302 Temperature, Sensor Maximum

View the highest temperature encountered, as measured by the TS-3 Temperature Sensor (if applicable).

Primary Index	Global
Values	Range: - 50 to 150°C (view only)
	Preset: - 50°C
Related	• P303 Temperature, Sensor Min

Press CLEAR [C] [↵] keys to reset the log after a short circuit on the transducer wiring.

P303 Temperature, Sensor Minimum

Shows the lowest temperature encountered, as measured by the TS-3 Temperature Sensor (if applicable).

Primary Index	Global
Values	Range: - 50 to 150°C (view only)
	Preset: 150°C
Related	• P302 Temperature, Sensor Max

Press CLEAR [C] [↵] keys to reset the log after an open circuit on the transducer wiring.

Record Readings (P304 and P305)

This identifies the occurrence of the record high and low level readings. Press CLEAR [C] [↵] keys to reset these values once the installation is working correctly.

P304 Reading Max

Shows the highest Reading calculated (in normal Reading units or %).

Primary Index	Level
Values	Range: -999 to 9999 (view only)
Related	• P305 Reading Min

P305 Reading Min

Shows the lowest Reading calculated (in normal Reading units or %).

Primary Index	Level
Values	Range: -999 to 9999 (view only)
Related	• P304 Reading Max

Pump Records (P309 to P312)

These features to identify pump usage and if the associated Relay Function (P111) is set for any **pump control** feature. The value is that of the pump connected to the associated terminals.

Enter a value to set the current record to that value. Use this if a pump is added with a known number of hours logged, or the value can be reset to zero **0** after maintenance.

P309 Pump RUN Time

Displays the amount of time in minutes since a relay was last activated.

Primary Index	Relay
Values	Range: 0 to 9999 minutes (view only)
Related	• Relay Function (P111) set for any pump control feature

Parameter measures the length of time since a relay was asserted, most often to determine how long a pump has been running. Alternatively, it can monitor a relay to show how long it has been in a state of alarm. It resets every time the relay is activated.

P310 Pump Hours

View or reset the accumulate ON time for the displayed Relay Number.

Primary Index	Relay
Values	Range: 0.000 to 9999
Related	• Relay Function (P111) set for any **pump control** feature

Value is displayed with a floating decimal point (the more figures displayed before the decimal, the fewer displayed after). It is the value displayed when 2 key is pressed in the RUN mode.

P311 Pump Starts

View or reset the accumulated number of times the Relay Number has been ON.

Primary Index	Relay
Values	Range: 0 to 9999
Related	• Relay Function (P111) set for any **pump control** feature

This value is displayed when 2 key is pressed and held for five seconds in RUN mode.

P312 Pump Run Ons [MR 200]

View or reset the accumulated number of times the displayed Relay Number has been held ON via Run On Interval (P130).

Please note that this parameter applies to the MultiRanger 200 only.

Primary Index	Relay
Values	Range: 0 to 9999
Related	• Relay Function (P111) set for any **pump control** feature

Flow Records (P320 and P321) [MR 200]

Please note that these parameters apply to the MultiRanger 200 only.

These features are enabled if Operation is set for OCM (P001 = 6), or an OCM device is defined (P600 ≠ 0). Use them to identify the occurrence of the record high and low flow rates as displayed in OCM Max Flow (P604) units, or as a percent of OCM Max Flow. Press CLEAR [c] [↵] keys to reset values once the installation is working correctly.

P320 Flow Max [MR 200]

View the highest flow rate calculated (in units or %).

Primary Index	Single Point Model	Dual Point Model
	Global	Transducer
Values	Range: -999 to 9999 (view only)	
Related	• P604 Maximum Flow	

P321 Flow Min [MR 200]

View the lowest flow rate calculated (in units or %).

Primary Index	Single Point Model	Dual Point Model
	Global	Transducer
Values	Range: -999 to 9999 (view only)	
Related	• P604 Maximum Flow	

LCD Totalizer (P322 and P323) [MR 200]

Please note that these parameters apply to the MultiRanger 200 only.

Use these features to view, reset, or preset the eight-digit display totalizer when Operation is set for OCM or Pumped Volume (P001 = 6 or 7). The eight-digit totalizer is divided into two groups of four digits. The four least significant totalizer digits are stored in P322, and the four most significant digits are stored in P323. Adjust these values separately to set a new total.

Example

P323 = 0017
P322 = 6.294
Totalizer Display = 00176.294

Totalizer units are dependent upon programming. Enter zero **0** (if required) to reset the totalizer to zero. Alternatively, enter any other (applicable) value, to preset the totalizer to the necessary value.

> **Note:** A second point is available only if the Dual Point Feature is enabled.

P322 LCD Total Low [MR 200]

View and/or alter the four least significant digits of the totalizer value.

	Single Point Model	Dual Point Model
Primary Index	Global	Transducer
Values	Range: 0.000 to 9999	
Related	• P630 LCD Totalized Multiplier • P633 LCD Totalized Decimal Position • P737 Primary Reading	

P323 LCD Total High [MR 200]

View and/or alter the four most significant digits of the totalizer value.

	Single Point Model	Dual Point Model
Primary Index	Global	Transducer
Values	Range: 0.000 to 9999	
Related	• P630 LCD Totalized Multiplier • P633 LCD Totalized Decimal Position • P737 Primary Reading	

Profile Records (P330 to P337)

> **WARNING:**
> **These parameters are for authorized service personnel or technicians familiar with Siemens Milltronics echo processing techniques.**

These features can record up to ten Echo profiles, initiated manually (P330), or automatically (P331 et al). If ten Profiles are already saved, addresses 1 through 10 are filled, the oldest automatically initiated record is overwritten. Manually initiated records are not automatically overwritten. All records are automatically deleted in the event of a power interruption.

When a record is displayed, results are based on current programming (which may have been altered since the record was saved). This permits the effect on the echo profile to be observed when changing an echo parameter.

P330 Profile Record

Records profiles for later viewing.

Primary Index	Echo profile	
Values	**Code**	**Description**
	----	no record
	A1	automatically recorded profile from Transducer One
	A2	automatically recorded profile from Transducer Two
	U1	manually recorded profile from Transducer One
	U2	manually recorded profile from Transducer Two

In addition to being a profile records library, this provides two functions:

- manually records and saves echo profiles
- displays an echo profile, recorded manually or automatically

To select a record address

1. Enter PROGRAM mode and press DISPLAY twice to highlight the index field. The field shows two underscores _ _.
2. Type the index number. The profile record information is shown.
3. Use ARROWS to scroll through the records.

To manually record a profile

Press TRANSDUCER to fire the transducer and record the echo profile into the internal buffer for display.

MultiRanger 100 and MultiRanger 200 Features

To save a manual record

Press ENTER to copy the echo profile record in the buffer and save it in the selected address in the record library. The parameter value field displays the new record information.

To display a record

Press key to enter display auxiliary mode and then:

- Press TRANSDUCER to copy the current echo profile into the buffer for display on Dolphin Plus

To delete a record

Press CLEAR and then ENTER to delete the echo profile record in the selected address. The value returns to - - - -.

P331 Auto Record Enable

Use to enable/disable the Auto Profile Record function.

Primary Index	Global		
Values	Range: 0 to 1		
	0	*	Off
	1		On

P332 Auto Record Transducer

Specifies the Transducer Point Number for which Auto Profile Records are saved.

Please note that Differential and Average operation is a MultiRanger 200 feature.

Primary Index	Global		
Values	Range: 0 to 2		
	0		Any transducer
	1	*	Transducer One
	2		Transducer Two
Altered By	• P001 Operation = 4 or 5		

MultiRanger 200

This feature is preset to Point Number 1. (Alteration is only required if **differential** or **average** Operation [P001 = 4 or 5] is selected.)

P333 Auto Record Interval

Enter the time to elapse after an Auto Profile Record is saved before another Auto Profile Record can be saved (subject to all other restrictions).

Primary Index	Global
Values	Range: 0.0 to 166.6 (minutes)
	Preset: 120

Auto Record ON and OFF Setpoints (P334 to P337)

Use Auto Record ON Setpoint (P334) and Auto Record OFF Setpoint (P335) to define the boundaries within which the level must be, for the resultant Echo Profile to be considered for an Auto Profile Record.

If **----** is displayed for either P334 or P335, Auto Profile Records are saved regardless of current level (subject to all other restrictions).

Enter the level value in Units (P005) or percent of Span (P007) as referenced to Empty (P006).

P334 Auto Record ON Setpoint

Enter the critical level which, in conjunction with Auto Record OFF Setpoint, defines the boundaries for Auto Profile Records to be saved.

Primary Index	Global
Values	Range: -999 to 9999
Related	• P335 Auto Record OFF Setpoint • P336 Auto Record Filling / Emptying • P337 Auto Record LOE Time

P335 Auto Record OFF Setpoint

Enter the critical level which, in conjunction with Auto Record ON Setpoint, defines the boundaries for Auto Profile Records to be saved.

Primary Index	Global
Values	Range: -999 to 9999
Related	• P334 Auto Record **ON** Setpoint • P336 Auto Record Filling / Emptying • P337 Auto Record LOE Time

P336 Auto Record Filling / Emptying

Use this feature to restrict Auto Profile Records from being saved unless the level is rising, falling or either.

Primary Index	Global		
Values	0	*	Auto Profile Record on filling or emptying
	1		Auto Profile Record on filling only
	2		Auto Profile Record on emptying only
Related	• P334 Auto Record ON Setpoint • P335 Auto Record OFF Setpoint • P337 Auto Record LOE Time • P702 Filling Indicator • P703 Emptying Indicator		

If the level changes at a rate in excess of the corresponding Filling / Emptying Indicator (P702 / P703) values, the Echo Profile is saved subject to this and other Auto Profile Record restrictions.

P337 Auto Record LOE Time

Limits Auto Profile Records from being saved unless extended LOE occurs.

Primary Index	Global
Values	Range: 0.0 to 9999 (seconds)
	Preset: 0.0
Related	• P334 Auto Record ON Setpoint • P335 Auto Record OFF Setpoint • P336 Auto Record Filling / Emptying

If the LOE condition exceeds the period entered, the Echo Profile is saved. When set for **0** LOE is not required for an Auto Profile Record to be saved.

Installation Records (P340 to P342)

P340 Date of Manufacture

View the date of manufacture of this MultiRanger unit.

Primary Index	Global
Values	Format: YY:MM:DD (view only)
Related	• P340 Date of Manufacture • P342 Start Ups

P341 RUN Time

View the number of days this MultiRanger has been in operation.

Primary Index	Global
Values	Range: 0.000 to 9999 (view only)
Related	• P340 Date of Manufacture • P342 Start Ups

The RUN Time value is updated once a day, and cannot be reset. However, in the event of a power interruption, the counter won't advance. Therefore, a unit that is powered down on a regular basis will not have an accurate value.

P342 Start Ups

The number of times power has been applied since the Date Of Manufacture.

Primary Index	Global
Values	Range: 1 to 9999 (view only)
Related	• P340 Date of Manufacture • P342 Run Time

Open Channel Monitoring (P600 to P621) [MR 200]

Open Channel Monitoring (OCM) operation is a MultiRanger 200 feature only.

If the MultiRanger is used to monitor open channel flow, alter the following parameters as required and run a calibration as described in P621.

> **Note:** See *Open Channel Monitoring* (OCM) on page 73 for application examples involving common weirs and flumes.

The MultiRanger measures **head** as referenced to Empty (P006) or OCM Zero Offset (P605), when Operation is set for **OCM** (P001 = 6). Flowrate, based on head (at the **point of measure** specified by the Primary Measuring Device fabricator) is also calculated and displayed on the LCD.

Some Primary Measuring Devices require a longer Range Extension (P801) to avoid entering the LOE failure state if the water level falls below the zero point of the Primary Measuring Device. See *P801 Range Extension* on page 200 for more information.

P600 Primary Measuring Device [MR 200]

The type of primary measuring device (PMD) used.

Primary Index	**Single Point Model**			**Dual**
	Global			Transducer
Values	0	*	off (no calculation)	
	1		Exponential (see P601)	
	2		Palmer-Bowlus Flume (see P602)	
	3		H-Flume (see P602)	
	4		Universal Linear Flow Calculation (see P610, P611)	
	5		Universal Curved Flow Calculation (see P610, P611)	
	6		BS-3680/ISO 4359 Rectangular Flume (see P602)	
	7		BS-3680/ISO 1438/1 Thin Plate V-Notch Weir (see P602)	
Alters	• P601 Flow Exponent • P602 Primary Measuring Device Dimensions • P608 Flowrate Units			
Altered By	• P001 Operation			
Related	• P603 Maximum Head • P604 Maximum Flow • P605 Zero Head • P610 Head Breakpoints • P611 Breakpoint			

The MultiRanger is pre-programmed for common PMD flow calculations. If your PMD is not listed, select the appropriate Universal Flow Calculation.

Associated parameters Max Head (P603), Max Flow (P604), and Min Head (P605) may be scroll accessed. If Operation is not set for **OCM** (P001 = 6), this value is preset to **0**. If Operation is set for **OCM**, it is preset to **1**.

P601 Flow Exponent [MR 200]

The Exponent for the flow calculation formula.

	Single Point Model	Dual
Primary Index	Global	Transducer
Values	Range: -999 to 9999	
	Preset: 1.55	
Altered By	• P600 Primary Measuring Device	
Related	• P603 Maximum Head • P604 Maximum Flow • P605 Zero Head	

Use this parameter if the Primary Measuring Device (P600) is set to 1 (exponential). It creates an exponential curve with end points set by Max Head (P603) and Zero Head (P604) and with the curve based on the specified exponent.

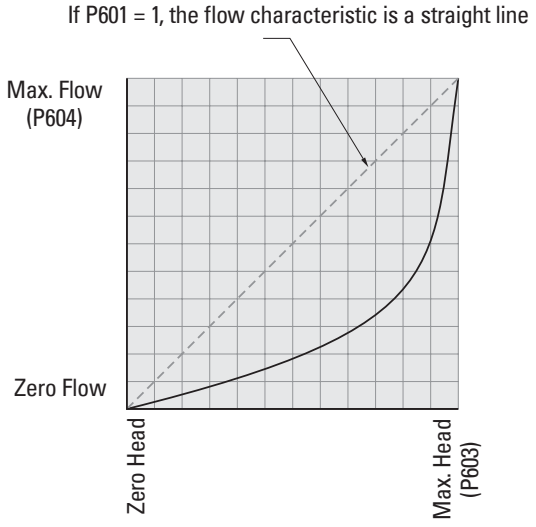

A Word on Exponents

The exponential equation is

$$Q = KH^{P601}$$

Where:
Q = flow
K = internal constant
H = head

Use the exponent specified by the PMD manufacturer, if available, or the sample value given below.

Example Exponents

PMD Type	Exponent (sample only)
Suppressed Rectangular Weir	1.50
Cipolletti Weir	1.50
Venturi Flume	1.50
Parshall Flume	1.22 to 1.607
Leopold Lagco	1.547
V-Notch Weir	2.50

P602 Primary Measuring Device Dimensions [MR 200]

The dimensions of the Primary Measuring Device (PMD).

Primary Index	**Single Point Model**		**Dual Point Model**
	Global		Transducer and Dimension
Secondary Index	Dimension		
Index Values for Supported PMDs	ISO 1438/1		
	1	Notch Angle	
	2	Discharge Coefficient	
	ISO 4359		
	1	Approach width	
	2	Throat width	
	3	Hump Height	
	4	Throat Length	
	5	Velocity coefficient	
	6	Discharge coefficient	
	Palmer Bowlus		
	1	Flume width	
	H Flume		
	1	Flume height	
Altered By	• P600 Primary Measuring Device		

Use this parameter if the Primary Measuring Device is directly supported (P600=2,3,6,7). The dimensions required for each PMD vary.

For more information on PMD, see page 73.

P603 Maximum Head [MR 200]

The level value associated with Maximum Flow, in Units (P005).

	Single Point Model	Dual Point Model
Primary Index	Global	Transducer
Values	Range: -999 to 9999	
	Preset: Span (P007) value	
Altered By	• P005 Units • P600 Primary Measuring Device	
Related	• P604 Maximum Flow • P605 Zero Head	

This represents the highest head level supported by the PMD and works in conjunction with Maximum Flow (P604) to define the highest point in the exponential curve. Use it when the Primary Measuring Device (PMD) requires a maximum head and flow reference point. This would include Exponential, Palmer Bowlus Flume, H-Flume, and Universal breakpoints.

P604 Maximum Flow [MR 200]

The maximum flowrate associated with Maximum Head (P603).

	Single Point Model	Dual Point Model
Primary Index	Global	Transducer
Values	Range: -999 to 9999	
	Preset: 1000	
Altered By	• P600 Primary Measuring Device	
Related	• P603 Maximum Head • P606 Time Units • P925 Flow Measurement	

This represents the flow at the highest head level supported by the PMD. and works in conjunction with Maximum Head (P603) to define the highest point in the exponential curve. Use it when the Primary Measuring Device (PMD) requires a maximum head and flow reference point. This would include Exponential, Palmer Bowlus Flume, H-Flume, and Universal breakpoints.

Also use this parameter with Time Units (P606) to define the flowrate units. The limitation of four digits is for the LCD only, and the flowrate value is available with greater precision through communications.

Example

Conditions	Enter
• Flowrate display: millions of gallons/day, • Maximum flowrate is 376,500,000 gallons/day	• **376.5** for Maximum Flow (P604) • and **4** for Time Units (P606).

P605 Zero Head [MR 200]

The distance above Empty (P006) in Units (P005) representing zero head (and zero flow).

	Single Point Model	Dual Point Model
Primary Index	Global	Transducer
Values	Range: -999 to 9999	
	Preset: 0.000	
Altered By	• P005 Units • P007 Span	
Related	• P006 Empty • P801 Range Extension • P926 Head Measurement	

This feature can be used for most weirs and some flumes (e.g. Palmer Bowlus) where the zero reference is at a higher elevation than the channel bottom.

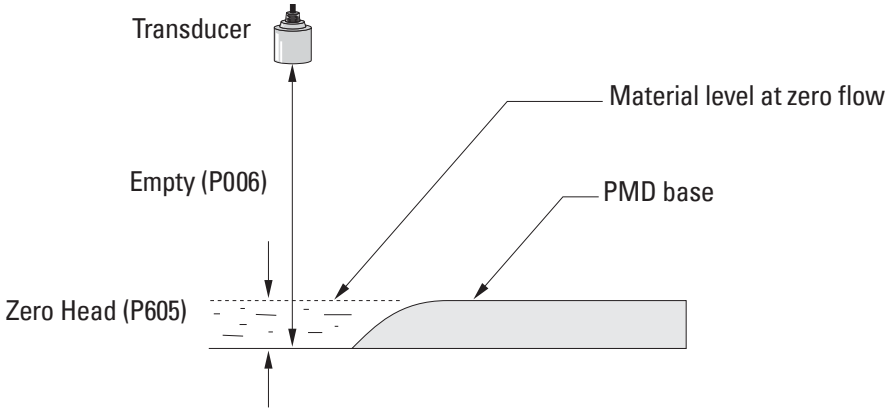

P606 Time Units [MR 200]

Determines the units used to display current flow and logging flow values.

Primary Index	Single Point Model		Dual Point Model
	Global		Transducer
Values	1		seconds
	2		minutes
	3		hours
	4	*	days
Alters	•		
Altered By	• P608 Flowrate Units		

This is used when the Primary Measuring Device is **Ratiometric** (P608=0).

Example

Conditions	Enter
• Flowrate display: millions of gallons/day, • Maximum flowrate is 376,500,000 gallons/day	• **376.5** for Maximum Flow (P604) • and **4** for Time Units (P606).

P607 Flowrate Decimal [MR 200]

The maximum number of decimal places to be displayed.

Primary Index	Single Point Model		Dual Point Model
	Global		Transducer
Values	0		no digits after the decimal point
	1		1 digit after the decimal point
	2		2 digits after the decimal point
	3		3 digits after the decimal point
Altered By	• P060 Decimal Position		

In RUN mode, the number of decimal places displayed is automatically adjusted (if necessary) to prevent the number of Flowrate digits from exceeding display capabilities.

The maximum number of head decimal places is controlled by Decimal Position (P060).

P608 Flowrate Units [MR 200]

The volume units used to display total flow.

Note: Set this parameter only when using BS-3680/ISO 4359 Rectangular Flume or BS-3680/ISO 1438/1 Thin Plate V-Notch Weir (P600 = 6 or 7). Use the default value of 0 for P608 when P600 = 1 to 5.

Primary Index	**Single Point Model**		**Dual Point Model**
	Global		Transducer
Values	Ratiometric (P600=all)		
	0	*	Ratiometric calculation (units defined by P604)
	Absolute (P600=6,7 only)		
	1		litres / second
	2		cubic metres / hour
	3		cubic metres / day
	4		cubic feet / second
	5		gallons / minute – Imperial
	6		million gallons / day – Imperial
Values	7		gallons / minute – U.S.
	8		million gallons / day – U.S.
Alters	• P606 Time Units		
Altered By	• P600 Primary Measuring Device		
Related	• P608 Flowrate Units		

This parameter is enabled only if the primary measuring device (PMD) supports absolute calculations (P600=6,7). For absolute PMDs (P600=6,7) volume units can be specified using this parameter. If needed, absolute PMDs can still use ratiometric (P608=0) to accommodate other units.

P610 Head Breakpoints [MR 200]

The head breakpoints for which flowrate is known. See "Accessing a Secondary Index" on page 117 for more information..

	Single Point Model	Dual Point Model
Primary Index	Global	Transducer
Secondary Index	Breakpoint	
Values	Range: 0.000 to 9999	
Related	• P611 Breakpoint Flowrates	

The values in the Span for which flowrates are known. See *Universal Calculation Support* on page 83 for how to specify universal flows.

P611 Breakpoint Flowrates [MR 200]

The flowrate corresponding to each Head Breakpoint entered.

	Single Point Model	Dual Point Model
Primary Index	Global	Transducer
Secondary Index	Breakpoint	
Values	Range: 0.000 to 9999	
Related	• P610 Head Breakpoints	

These are the flowrates for the related breakpoints. See *Universal Calculation Support* on page 83 for how to specify universal flows.

Head vs. Flowrate (P610 and P611)

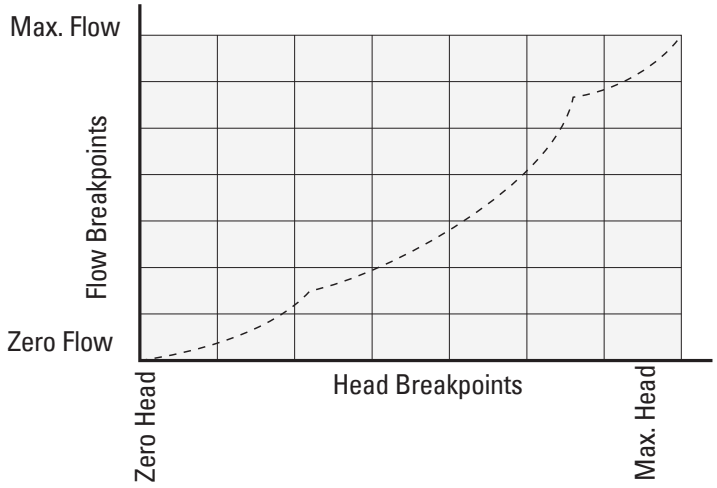

P620 Low Flow Cutoff [MR 200]

Eliminates totalizer activity for flows at or below the cutoff value.

	Single Point Model	Dual Point Model
Primary Index	Global	Transducer
Values	Range: 0.000 to 9999	
	Preset = 5.000 %, or equivalent units	
Altered By	• P005 Units	
Related	• P007 Span	

Use this to enter the minimum head in units (P005) or as a percent of span.

P621 Auto Zero Head [MR 200]

Calibrates Zero Head (P605) based on actual head measurements.

	Single Point Model	Dual Point Model
Primary Index	Global	Transducer
Values	Range: -999 to 9999	
Related	• P006 Empty • P062 Offset Reading • P605 Zero Head • P664 Temperature	

Use this parameter when the reported head is consistently high or low by a fixed amount.

Before using this feature, verify the following parameters are correct:

- Empty (P006)
- Temperature (P664)
- Offset Reading (P062=0)
- Zero Head Offset (P605)

Procedure, with “head” steady

1. Press TRANSDUCER to display the calculated head.
2. Repeat step ONE at least FIVE times to verify repeatability.
3. Measure the **actual** head (with a tape measure or solid rule).
4. Enter the **actual** head value.

The deviation between the entered Empty (P006) value and the calibrated Empty value is stored in Offset Correction (P652). Alternatively, the Empty parameter (P006) can be corrected directly.

Pumped Volume Totalizer (P622) [MR 200]

The Pumped Volume Totalizer is a MultiRanger 200 feature only.

If the eight-digit totalizer display or a remote totalizer contact closure are desired, alter the following parameters.

P622 Inflow / Discharge Adjust [MR 200]

*The method used to calculate the volume pumped, for **pumped total** Operation (P001 = 7).*

Primary Index	**Single Point Model**	**Dual Point Model**
	Global	Transducer
Values	1 = inflow * / pump cycle When the pump is off, the MultiRanger estimates the volume of inflow by recording the rate at which the liquid level changes. When the pump is operating, the estimated inflow volume is added to the pumped volume total. When the pump stops, the pumped volume of the previous pump cycle is added to the total volume pumped in the totalizer.	
	2 = inflow * ignored Inflow is assumed to be **0** while pumps are running.	
	3 = inflow * / rate (preset) Volume pumped is adjusted for inflow. Inflow rate is estimated by assuming that the rate calculated (P708) just prior to the start of the pump cycle remained constant during the pump cycle. Inflow rate is averaged using rate filter (P704), rate update time (P705) and rate update distance (P706) to control how the average rate is calculated.	
Related	• P001 Operation • P704 Rate Filter • P705 Rate Update Time • P706 Rate Update Distance • P708 Volume Rate Display	

* or discharge

Totalizer (P630 to P645) [MR 200]

The Totalizer features apply to MultiRanger 200 only.

P630 LCD Totalized Multiplier [MR 200]

Use this feature if the LCD Total increments by too large (or too small) an amount.

Primary Index	**Single Point Model**		**Dual Point Model**
	Global		Transducer
Values	-3		.001
	-2		.01
	-1		.1
	0	*	1
	1		10
	2		100
	3		1000
Values	4		10,000
	5		100,000
	6		1,000,000
	7		10,000,000
Related	• LCD Totalizer (P322 and P323)		

Enter the factor (powers of 10 only) by which actual volume is divided, prior to display on the LCD. Use a value such that the eight-digit totalizer doesn't roll over between readings.

Example:

For an LCD Total display in 1000s of volume units, enter **3**.

P633 LCD Totalized Decimal Position [MR 200]

Enter the maximum number of decimal places to be displayed.

Primary Index	Single Point Model		Dual Point Model
	Global		Transducer
Values	0		no digits after the decimal point
	1		1 digit after the decimal point
	2	*	2 digits after the decimal point
	3		3 digits after the decimal point
Related	• LCD Totalizer (P322 and P323)		

Note: Set the decimal position during initial commissioning of the MultiRanger 200. If the position is changed later, the totalizer data in P322 and P323 will be incorrect and must be reset according to the new decimal value.

In RUN mode, the number of decimal places displayed is not automatically adjusted. When the LCD Total value is so large as to exceed display capabilities, the total **rolls over** to **0** and continues incrementing.

P640 Remote Totalized Multiplier [MR 200]

*Use this feature if the remote totalizer (device connected to the relay set for **totalizer operation** [relay Function, P111 = 40]), updates too slowly or rapidly.*

Primary Index	Single Point Model		Dual Point Model
	Global		Transducer
Values	-3		.001
	-2		.01
	-1		.1
	0	*	1
Values	1		10
	2		100
	3		1000
	4		10,000
	5		100,000
	6		1,000,000
	7		10,000,000
Related	• P001 Operation • P111 Relay Control Function • P114 Relay **Duration** Setpoint • P115 Relay **Interval** Setpoint • P645 Relay Duration		

Parameter is relevant only if Operation is set to OCM or Pumped Volume (P001 = 6 or 7). The relays on the MultiRanger have a maximum frequency of 2.5 Hz.

Enter the factor (powers of 10 only) by which actual volume is divided, prior to Remote Totalizer count increment.

Example:

For a Remote Totalizer update by 1000s of volume units, enter **3**.

P641 Flow Sampler Mantissa [MR 200]

Use this feature in conjunction with Flow Sampler Exponent (P642) to establish the number of flow units required to increment the Flow Sampler (device connected to the MultiRanger relay set for the flow sampler operation Relay Function, P111 = 41).

	Single Point Model	Dual Point Model
Primary Index	Global	Transducer
Values	Range: 0.001 to 9999	
	Preset = 1.000	
Related	• P001 Operation • P111 Relay Control Function • OCM (P600 to P621) • P642 Flow Sampler Exponent	

This parameter is relevant only if Operation is set to OCM (P001 = 6).

Enter the mantissa (Y) for the exponent (Z) in the formula:

Flow Sampler Increment = Y x 10^Z Flow units.

Example: To count once every 4310 (4.31 x 10^3) flow units:

- set P641 to **4.31** and P642 to **3**

P642 Flow Sampler Exponent [MR 200]

*Use this feature in conjunction with Flow Sampler Mantissa (P641) to establish the number of flow units required to increment the Flow Sampler (device connected to the MultiRanger relay set for the **flow sampler operation** Relay Function, P111 = 41).*

	Single Point Model	Dual Point Model
Primary Index	Global	Transducer
Values	Range: -3 to +7 (integers only)	
	Preset = 0	
Related	• P001 Operation • P111 Relay Control Function • OCM (P600 to P621) • P641 Flow Sampler Mantissa	

This parameter is relevant only if Operation is set to OCM (P001 = 6).

Enter the exponent (Z) for the mantissa (Y) in the formula:

Flow Sampler Increment = Y x 10^Z Flow units.

P645 Relay Duration [MR 200]

Use this feature (if desired) to adjust the minimum contact closure duration of a relay set as a totalizer, flow sampler, time (control), or aeration (P111 = 40, 41, 60 or 62)

Primary Index	Global
Values	Range: 0.1 to 1024
	Preset = 0.2 (sec)
Related	• P111 Relay Control Function

Enter minimum contact closure duration (in seconds) required by the device connected.

For the flow sampler function this value is used for both the ON time of the relay and the OFF time between contacts.

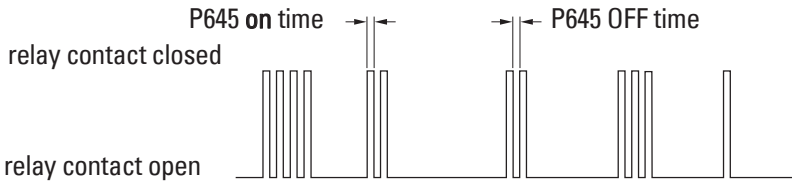

Range Calibration (P650 to P654)

There are two types of calibration possible:

Offset: Adjusts the measurements by a fixed amount.

Sound Velocity: Adjusts speed of sound and changes the measurement calculations.

Do Offset calibration at any steady level unless a Sound Velocity calibration is also done. If both calibrations are done then do Offset at a known high level and Sound Velocity at a known low level.

P650 Offset Calibration

Calibrates Empty (P006) if the reported level is consistently high or low by a fixed amount.

Primary Index	Single Point Model	Dual Point Model
	Global	Transducer
Values	Range: -999 to 9999	
Related	• P006 Empty • P062 Offset Reading • P605 Zero Head	• P652 Offset Correction • P664 Temperature

Before using this feature, verify the following parameters are correct:

- Empty (P006)
- Temperature (P664)
- Offset Reading (P062)
- Zero Head Offset (P605), if using OCM

Offset Calibration

Begin with a steady level.

1. Press TRANSDUCER to display the calculated reading.
2. Repeat Step One at least five times to verify repeatability.
3. Measure the actual reading (use tape measure).
4. Enter the actual value.

The deviation between the entered Empty (P006) value and the calibrated **Empty** value is stored in Offset Correction (P652).

P651 Sound Velocity Calibration

Changes the speed of sound constant.

Primary Index	Single Point Model	Dual Point Model
	Global	Transducer
Values	Range: -999 to 9999	
Related	• P653 Velocity • P654 Velocity at 20°C	

Condition for use of this feature

- The acoustic beam atmosphere is other than air
- The acoustic beam atmosphere temperature is unknown
- The Reading accuracy is acceptable at higher material levels only

For best results, calibrate with the level at a known value near empty.

Using Sound Velocity Calibration

Ensure a steady level at some low value (P653 and P654 adjusted accordingly)

1. Allow sufficient time for the vapor concentration to stabilize.
2. Press TRANSDUCER to display the calculated reading.
3. Repeat Step Two at least five times to verify repeatability.
4. Measure the actual reading (e.g. with a tape measure).
5. Enter the actual value.

Repeat this procedure if the atmosphere type, concentration, or temperature conditions are different from when the last sound velocity calibration was performed.

> **Note:** In gasses other than air, the temperature variation may not correspond with the speed of sound variation. Turn off temperature sensor and use a fixed temperature.

P652 Offset Correction

The value altered when an Offset Calibration is performed.

	Single Point Model	Dual Point Model
Primary Index	Global	Transducer
Values	Range: -999 to 999.0	
Related	• P650 Offset Calibration	

Alternatively, if the amount of Offset Correction required is known, enter the amount to be added to the Reading before display.

P653 Velocity

The value adjusted based on the Sound Velocity at 20 °C (P654) vs. Temperature (P664) characteristics of air.

	Single Point Model	Dual Point Model
Primary Index	Global	Transducer
Values	Range: 50.3 to 20011.9 m/s (165 to 6601 ft/s)	
Related	• P651 Sound Velocity Calibration • P654 Velocity at 20°C	

Alternatively, enter the current sound velocity (if known), or perform a Sound Velocity Calibration (P651). The units used are m/s if P005 = 1, 2, or 3 (ft/s if P005 = 4 or 5).

P654 Velocity at 20°C

This value is used to automatically calculate Sound Velocity (P653).

	Single Point Model	Dual Point Model
Primary Index	Global	Transducer
Values	Range: 50.0 to 2000.0 m/s (164 to 6562 ft/s)	
Related	• P005 Units • P651 Sound Velocity Calibration • P653 Velocity	

After performing a Sound Velocity Calibration, check this value to verify the acoustic beam atmosphere is air (344.1 m/s or 1129 ft/s).

Alternatively, if the acoustic beam atmosphere sound velocity at 20°C (68 °F) is known, and the sound velocity vs. temperature characteristics are similar to that of air, enter the sound velocity.

The units used are m/s if P005 = 1, 2, or 3 (or ft/s if P005 = 4 or 5).

Temperature Compensation (P660 to P664)

P660 Temp Source

Source of the temperature reading used to adjust the speed of sound.

Primary Index	Transducer		
Values	1	*	AUTO
	2		Temp Fixed
	3		Ultrasonic/Temperature Transducer
	4		TS-3 Temperature Sensor
	5		Average (TS-3 and transducer)
Alters	• P664 Temperature		
Related	• P651 Sound Velocity • P653 Velocity • P654 Velocity at 20°C • P661 Temp Fixed		

The MultiRanger uses the TS-3 temperature sensor assigned to the transducer. If one is not connected, the ultrasonic/temperature transducer is used. If the transducer does not have an internal temperature sensor, the Temp Fixed (P661) value is used.

If the acoustic beam atmosphere temperature varies with distance from the transducer, connect a TS-3 Temperature Sensor and ultrasonic / temperature transducers, and select average.

In gasses other than air, the temperature variation may not correspond with the speed of sound variation. In these cases turn off the temperature sensor and use a fixed temperature.

P661 Temp Fixed

Use this feature if a temperature sensing device is not used.

Primary Index	Transducer
Values	Range: -199 to 199 (preset = 20 °C)
Related	• P651 Sound Velocity Calibration • P653 Velocity • P654 Velocity at 20°C • P660 Temp Source

Enter the temperature (in °C) of the atmosphere within the transducer acoustic beam. If the temperature varies with distance from the transducer, enter the average temperature.

P663 Temperature Transducer Allocation

*This feature may only be used for **differential** or **average** Operation (P001 = 4 or 5).*

Primary Index	Transducer		
Values	1	*	Transducer One
	2		Transducer Two
	1:2		Transducer One and Two average [MR200]
Related	• P651 Sound Velocity Calibration • P653 Velocity • P654 Velocity at 20°C		

As preset, the temperature measurements of Ultrasonic / Temperature Transducer One and Two are allocated to Points 1 and 2 respectively.

Use this feature if the temperature measurement from both transducers should be identical, but one is located close to a radiant heat source. Allocate the temperature measurement of the other transducer to both transducer Point Numbers.

Enter the number of the Transducer whose temperature measurement will be used for the distance calculation of the Point Number displayed. When both transducers are allocated to a Point Number, the temperature measurements from each are averaged.

P664 Temperature

View the transducer temperature in °C.

Primary Index	Transducer
Values	Range: -50 to 150 (view only)
Altered By	• P660 Temp Source
Related	• P651 Sound Velocity Calibration • P653 Velocity • P654 Velocity at 20°C • P661 Temp Fixed

Value is displayed when 6 is pressed in RUN mode (see *Readings in Run Mode* on page 23).

If Temp Source (P660) is set to any value other than Fixed Temp, the value displayed is the temperature measured. If Temp Source is set to Fixed Temp, the P661 value is displayed.

Rate (P700 to P708)

These parameters determine how material level changes are reported.

P700 Max Fill Rate

Adjusts the MultiRanger response to increases in the actual material level (or advance to a higher Failsafe Material Level, P071).

	Single Point Model	Dual Point Model
Primary Index	Global	Transducer
Values	Range: 0.000 to 99.00 m (or equivalent depending on units)	
Altered by	• P003 Maximum Process Speed	
Related	• P005 Units • P007 Span • P071 Failsafe Material Level	

Enter a value slightly greater than the maximum vessel filling rate. This value, in Units (P005) or % of Span (P007) per minute, is automatically altered when Maximum Process Speed (P003) is altered.

P003 Value	Meters/Minute
1	0.1
2	1
3	10

P701 Max Empty Rate

Adjusts the MultiRanger response to decreases in the actual material level (or advance to a lower Failsafe Material Level, P071).

Primary Index	Single Point Model	Dual Point Model
	Global	Transducer
Values	Range: 0.000 to 99.00 m (or equivalent depending on units)	
Altered by	• P003 Maximum Process Speed	
Related	• P005 Units • P007 Span • P071 Failsafe Material Level	

Enter a value slightly greater than the maximum vessel emptying rate. This value, in Units (P005) or % of Span (P007) per minute, is automatically altered when Maximum Process Speed (P003) is altered.

P003 Value	Meters / Minute
1	0.1
2	1
3	10

P702 Filling Indicator

The fill rate required to activate the LCD Filling indicator ( ).

Primary Index	Single Point Model	Dual Point Model
	Global	Transducer
Values	Range: 0.000 to 99.00 m (or equivalent depending on units)	
Altered by	• P003 Maximum Process Speed	
Related	• P005 Units • P007 Span • P700 Max Fill Rate	

This value (in Units (P005) or % of Span (P007) per minute) is automatically set to 1/10 of the Max Fill Rate (P700).

P703 Emptying Indicator

The empty rate required to activate the LCD Emptying indicator ( ).

Primary Index	Single Point Model	Dual Point Model
	Global	Transducer
Values	Range: 0.000 to 99.00 m (or equivalent depending on units)	
Altered by	• P003 Maximum Process Speed	
Related	• P005 Units • P007 Span • P701 Max Empty Rate	

This value (in Units (P005) or % of Span (P007) per minute) is automatically set to 1/10 of the Max Empty Rate (P701).

P704 Rate Filter

Damps Rate Value (P707) fluctuations.

Primary Index	Single Point Model		Dual Point Model
	Global		Transducer
Values	0		Rate display not required
	Filtered Output		
	1		Continuously filtered and updated
	Interval Output		
	2		1 minute or 50 mm (2 in)
	3		5 minutes or 100 mm (3.9 in)
	4		10 minutes or 300 mm (11.8 in)
	5		10 minutes or 1000 mm (39.4 in)
Alters	• P707 Rate Value		
Altered by	• P003 Maximum Process Speed		
Related	• P705 Rate Update Time/ P706 Rate Update Distance		

Enter the time or distance interval over which the Rate Value is to be calculated before the display updates.

This is automatically altered along with Maximum Process Speed (P003).

This value automatically alters the Rate Update Time (P705) and / or Rate Update Distance (P706). Alternatively, these parameter values may be altered independently.

P705 Rate Update Time

The time period (in seconds) over which the material level rate of change is averaged before Rate Value update.

	Single Point Model	Dual Point Model
Primary Index	Global	Transducer
Values	Range: 0.000 to 9999	
Related	• P707 Rate Value	

P706 Rate Update Distance

The material level change (in metres) to initiate a Rate Value update.

	Single Point Model	Dual Point Model
Primary Index	Global	Transducer
Values	Range: 0.000 to 9999	
Related	• P707 Rate Value	

P707 Rate Value

The rate of material level change (in Units (P005) or % of Span (P007) per minute).

	Single Point Model	Dual Point Model
Primary Index	Global	Transducer
Values	Range: -999 to 9999 (view only)	
Altered By	• P704 Rate Filter	
Related	• P005 Units • P007 Span	

A negative rate indicates the vessel is emptying.

This is the value displayed when 7 is pressed in the RUN mode as described in the *Readings in RUN Mode* chart on page 23.

P708 Volume Rate Display [MR 200]

*The rate of change of volume in **percent of maximum volume** per minute.*

Please note that this feature applies to the MultiRanger 200 only.

	Single Point Model	Dual Point Model
Primary Index	Global	Transducer
Values	Range: -999 to 9999 (view only)	
Related	• P622 Inflow / Discharge Adjust	

This value is used internally to calculate inflow in pumped volume applications (P622=3).

Press READING [▲%] to toggle between percent and volume.

Measurement Verification (P710 to P713)

P710 Fuzz Filter

Use this to stabilize the reported level, due to level fluctuations (such as a rippling or splashing liquid surface) within the Echo Lock Window (P713).

	Single Point Model	Dual Point Model
Primary Index	Global	Transducer
Values	Range: 0 to 100 (0 = off)	
Altered by	• P003 Maximum Process Speed	
Related	• P007 Span • P713 Echo Lock Window	

This value (in % of Span, P007) is automatically altered when Maximum Process Speed (P003) is altered. The higher the value entered, the greater the fluctuation stabilized.

P711 Echo Lock

Use this feature to select the measurement verification process.

Primary Index	Single Point Model		Dual Point Model
	Global		Transducer
Values	0		Off
	1		Maximum verification
	2	*	Material agitator
	3		Total lock
Related	• P700 Max Fill Rate • P701 Max Empty Rate • P712 Echo Lock Sampling • P713 Echo Lock Window • P820 Algorithm		

If a material agitator (mixer) is used in the vessel monitored, set Echo Lock for **maximum verification** or **material agitator** to avoid agitator blade detection. Ensure the agitator is always ON while the MultiRanger is monitoring the vessel to avoid stationary blade detection.

When set for **max verification** or **material agitator**, a new measurement outside of the Echo Lock Window (P713) must meet the sampling criterion (P712).

For **total lock**, Echo Lock Window (P713) is preset to zero **0**. The MultiRanger continuously searches for the best echo according to the algorithm chosen (P820). If the selected echo is within the window, the window is then centered about the echo. If not, the window widens with each successive shot until the selected echo is within the window. The window then returns to its normal width.

When Echo Lock is OFF , the MultiRanger responds immediately to a new measurement as restricted by the Max Fill / Empty Rate (P700 / P701); however, measurement reliability is affected.

P712 Echo Lock Sampling

The sampling criterion sets the number of consecutive echoes appearing above or below the echo currently locked onto, that must occur before the measurements are validated as the new reading (for Echo Lock P711 values: 1 or 2).

	Single Point Model	Dual Point Model
Primary Index	Global	Transducer
Values	Range: 1:1 to 50:50	
	Format: x:y	
	x = the number of **above** echoes	
	y = the number of **below** echoes	
Related	• P711 Echo Lock	

P711 value	P712 preset value
1, max verification	5:5
2, material agitator	5:2

Example:

Setting

- P711 = 2, material agitator
- P712 = 5:2

Result

- a new reading will not be validated unlessfive consecutive measurements higher or two consecutive measurements lower than the current reading occur
- Resetting P711 returns P712 to the respective preset values

P713 Echo Lock Window

Adjusts the size of the Echo Lock Window.

	Single Point Model	Dual Point Model
Primary Index	Global	Transducer
Values	Range: 0.000 to 99.00 m (or equivalent depending on units), nearest acceptable value is returned	
	Preset: 0.000	
Altered by	• P003 Maximum Process Speed	
Related	• P005 Units • P711 Echo Lock	

The Echo Lock Window is a **distance window** (units P005) centred on the echo and used to derive the Reading. When a new measurement is in the window, it is re-centred and the new Reading calculated. Otherwise, the new measurement is verified by Echo Lock (P711) before the reading is updated.

When **0** is entered the window is automatically calculated after each measurement. For slower P003 Maximum Process Speed values the window is narrow, for faster P003 values the window becomes wider.

Transducer Scanning (P726 to P729)

P726 Level System Sync

Enables the System Sync on the terminal block.

Primary Index	Global		
Values	0		not required
	1	*	synchronize level monitors

Use this if another level measurement system is mounted nearby, and they are wired together on the Sync terminal.

P727 Scan Delay

The delay, in seconds, between measurements from transducer points (dual point model only).

Primary Index	Global
Values	Range: 0 to 60 seconds
	Preset: 5.0
Altered by	• P003 Maximum Process Speed
Related	• P001 Operation

This feature may only be used to adjust the delay before the next point is scanned. Enter the amount of delay in seconds. This value is automatically altered when Maximum Process Speed (P003) is altered.

P728 Shot Delay

The delay, in seconds, between transducer shots.

Primary Index	Transducer
Values	Range: 0.1 to 4.0
	Preset: 0.5

Use this if transient acoustic noise within the vessel is causing measurement difficulties due to echoes from one shot being received on the next. If more than one ultrasonic unit is installed for redundancy, this value should be **0**.

P729 Scan Time

View the elapsed time (in seconds) since the point displayed was last scanned.

Primary Index	Level
Values	Range: 0.000 to 9999 (view only)
Related	• P001 Operation

This may be viewed as an Auxiliary Reading in the RUN mode.

Display (P730 to P739)

P730 Auxiliary Reading

Use this feature to display operator selected Auxiliary Readings temporarily or indefinitely (as desired).

Primary Index	Global
Values	Range: 000 to 999
	Display: OFF, HOLd

Select **OFF** to display Auxiliary Readings temporarily. Select **HOLd** to display Auxiliary Readings until another Auxiliary Reading is selected or programming mode is entered. See the *Hand Programmer* section on page 27 for RUN mode auxiliary readings.

Selecting the Auxiliary Reading operation

1. Press READING [%] to display the Auxiliary Function symbol.
2. Press ARROWS [▲] [▼] to access the OFF or HOLd option desired.
3. Press ENTER [↵]

If necessary, enter the Parameter Number to default in the Auxiliary Reading display. That value will show in the auxiliary reading area by default. Other values are available but will reset to the parameter defined here.

P731 Auxiliary Reading Key

Enter the Parameter Number whose value is to be displayed in the Auxiliary Reading field

Primary Index	Global
Values	Range: 000 to 999
	Preset: Material Reading, P921

Pxxx is pressed in the RUN mode. See the *Hand Programmer* section on page 27 for RUN mode auxiliary readings.

P732 Display Delay

Adjusts the Point Number display scroll speed.

Primary Index	Global
Values	Range: 0.5 to 10
	Preset: 1.5 seconds
Related	• P001 Operation • P737 Primary Reading

Use this feature to adjust the delay before the display advances to the next Point Number. Display scrolling is independent from transducer scanning.

P733 Scroll Access

Use this feature to select the parameter scroll access option desired.

Primary Index	Global			
Values	0		Off	to scroll to all parameters (P001 to P999)
	1	*	Smart	for Quick Start, altered, and tagged parameters
	2		Tagged	to scroll to operator tagged parameters only

Press READING % and 7 to tag / untag any accessed parameter. is displayed to indicate the parameter accessed is tagged.

Note: Quick Start parameters (P001 – P007) and those changed from factory default settings cannot be untagged.

P735 Backlight

Controls the LCD backlighting.

Primary Index	Global		
Values	0		Off
	1	*	On
	2		Keypad activated

The backlight can be forced on or off, or be controlled by a programmer, in which case it will turn OFF 30 seconds after the last key is pressed.

P737 Primary Reading [MR 200]

The reading shown on the primary reading display when in RUN mode.

Primary Index	Global		
Values	Range: 0 to 3		
	1	*	Default reading (P920) based on operation (P001)
	2		LCD totalizer (P322, P323)
	3		Automatically toggle between 1 and 2
Related	• LCD Totalizer (P322 and P323) • P732 Display Delay • P920 Reading Measurement		

When this value indicates TOGGLE, then both readings (default and totalizer) are shown in the time specified in display delay (P732).

P741 Communications Timeout

The maximum time allowed between receiving a request and transmitting the response.

Primary Index	Port
Values	Range: 0 to 60 000 milliseconds
	Preset: 5 000 ms

If the maximum time is exceeded, no response will be transmitted, and the action required may not be completed.

SmartLinx Reserved (P750 to P769)

These parameters are reserved for optional SmartLinx communications cards and vary by card. Refer to the SmartLinx documentation to determine if any of them are used.

Communications (P770 to P782)

The MultiRanger communication ports are configured by a series of parameters that are indexed by port. See the *Communications* section on page 89 for a complete description of communications set-up.

Communication parameters are indexed to these communication ports, unless otherwise noted:

Port	Description
1	RS-232 port (RJ-11 modular telephone)
2	RS 485 port on terminal block

P770 Port Protocol

The communications protocol used between the MultiRanger and other devices.

Primary Index	Communications Port		
Values	0		Communications port disabled
	1		Siemens Milltronics Dolphin protocol
	2		Modbus ASCII slave serial protocol
	3	*	Modbus RTU slave serial protocol (preset for ports 1 and 2)

The MultiRanger supports the internationally recognized Modbus standard in both ASCII and RTU formats. Other protocols are available with optional SmartLinx cards.

P771 Network Address

The unique identifier of the MultiRanger on the network.

Primary Index	Communications Port		
Values	Range: 0 to 9999		
	1	*	Preset:

For devices connected with the Siemens Milltronics protocol this parameter is ignored. For devices connected with a serial Modbus slave protocol, this parameter is a number from 1-247. The network administrator must ensure that all devices on the network have unique addresses. Do not use the value **0** for Modbus communications as this is the broadcast address and is inappropriate for a slave device.

P772 Baud Rate

The communication rate with the master device.

Primary Index	Communications Port		
Values	4.8		4800 baud
	9.6		9600 baud
	19.2	*	19,200 baud (preset for port 2)
	115.2	*	115,200 baud (preset for port 1)

This specifies the rate of communication in Kbaud. Any value may be entered but only the values shown above are supported. The baud rate should reflect the speed of the connected hardware and protocol used.

P773 Parity

The serial port parity.

Primary Index	Communications Port		
Values	0	*	No Parity
	1		Odd Parity
	2		Even Parity

Ensure that the communications parameters are identical between the MultiRanger and all connected devices. For example, many modems default to N-8-1 which is No parity, 8 data bits, and 1 stop bit.

P774 Data Bits

The number of data bits per character.

Primary Index	Communications Port		
Values	Range: 5 to 8		
	8	*	Modbus RTU
	7 or 8		Modbus ASCII
	7 or 8		Dolphin Plus

P775 Stop Bits

The number of bits between the data bits.

Primary Index	Communications Port		
Values	Range: 1 or 2		
	1	*	Preset:

P778 Modem Available

Sets the MultiRanger to use an external modem..

Primary Index	Communications Port		
Values	0	*	No modem connected
	1		Answer only

P779 Modem Inactivity Timeout

Sets the time that the unit will keep the modem connected with no activity.

Primary Index	Communications Port		
Values	Range: 0-9999 seconds		
	0	*	No timeout
Related	• P778 Modem Available • P779 Modem Inactivity Timeout		

To use this parameter, ensure that P778 (Modem Available) = 1. Ensure that the value is low enough to avoid unnecessary delays when an unexpected disconnect occurs but long enough to avoid timeout while you are still legitimately connected. This parameter value is ignored by the Modbus Master Drivers, as they automatically disconnect when done.

Hanging Up

If the line is idle and the P779 Modem Inactivity Timeout expires, then the modem is directed to hang up the line. Ensure that P779 is set longer than the standard polling time of the connected master device. **0** disables the inactivity timer.

P782 Parameter Index Location

Determines where index information is stored for the parameter access area.

Primary Index	Global		
Values	0	*	Global
	1		Parameter-Specific
Altered By	• P770 Port Protocol		

Global (0)

The primary and secondary index values are global (they affect all of the parameter access area at once) and stored in:

- primary index – R43,999
- secondary index – R43,998

Parameter-Specific (1)

The primary and secondary index values are encoded into the format words found between R46,000 and R46,999. Each format work corresponds with the R44,000 series number in the parameter access map. For example, the format register R46,111 corresponds to the parameter P111 and the value is stored in R44,111. If the Modbus protocol (P770 = 2 or 3) is not used this parameter is ignored.

SmartLinx Hardware Testing (P790 to P795)

Note: These parameters are used to test and debug a SmartLinx card (if installed). Disregard these parameters if you do not have a SmartLinx card installed.

P790 Hardware Error

The results of ongoing hardware tests in the communications circuitry.

Primary Index	Global		
Values	PASS	*	No errors
	FAIL		Error occurred communicating with card; communications should resume.
	ERR1		No module installed, or module not supported; SmartLinx communications have been disabled
Related	• P791 Hardware Error Code • P792 Hardware Error Count		

If FAIL or ERR1 is displayed in P790 (Hardware Error), go to P791 (Hardware Error Code) and P792 (Hardware Error Count) for information about the error.

P791 Hardware Error Code

*Indicates the precise cause of **Fail** or **ERR1** condition from P790.*

Primary Index	Global		
Values	0	*	No error
	8		No SmartLinx card installed
	Any other value		Error code; provide this code to your Siemens Milltronics representative for troubleshooting
Related	• P790 Hardware Error		

P792 Hardware Error Count

*A count that increments by **1** each time **Fail** is reported in P790 (Hardware Error).*

Primary Index	Global
Values	Range: 0 to 9999
	Error count; provide this number to your Siemens Milltronics representative for troubleshooting.
Related	• P790 Hardware Error

P794 SmartLinx Module Type

This parameter is used to identify the module type when SmartLinx is used. If you are not using SmartLinx, this parameter is not functional. Please see the associated SmartLinx instruction manual for a full description of this parameter.

P795 SmartLinx Protocol

This parameter is used to identify the protocol when SmartLinx is used. If you are not using SmartLinx, this parameter is not functional. Please see the associated SmartLinx instruction manual for a full description of this parameter.

P799 Communications Control

Enables the read/write access to parameters via remote communications.

Primary Index	Protocol (Index 1 controls the Modbus Master (RS-485 or RS-232); Index 2 controls the Fieldbus Master (PROFIBUS DP, DeviceNet, or Allen Bradley Remote I/O)		
Values	0		Read Only
	1	*	Read/Write
	2		Restricted Access – read only except for P799 which is read/write

Notes:
- P799 controls the lock access via communications.
- P000 controls the lock access via the Siemens handheld programmer.

Echo Processing (P800 to P807)

P800 Near Blanking

The space near the transducer face which cannot be measured.

	Single Point Model	Dual Point Model
Primary Index	Global	Transducer
Values	Range: 0.000 to 99.00 m (or equivalent depending on units)	
	Preset: 0.300m (Most transducers) 0.450m (XCT-8, XCT-12)	
Related	• P006 Empty • P007 Span • P833 TVT Start Min	

Use this feature if the surface is reported to be near the transducer face but is in fact much further away. Extend this value when changing transducer location, mounting, or aiming.

Please note that changing the Near Blanking cannot correct measurement problems. Ensure that Span (P007) < Empty (P006) minus Near Blanking (P800)

P801 Range Extension

Allows the material level to fall below the Empty setting without reporting LOE.

	Single Point Model	Dual Point Model
Primary Index	Global	Transducer
Values	Range: 0.000 to 99.00 m, or max. span (P007), or equivalent depending on units	
	Preset: 20% of Span (P007)	
Related	• P005 Units • P006 Empty • P007 Span • P004 Transducer	

This feature is useful in OCM applications where the Empty level is set to the bottom of the weir, and above the bottom of the channel, and should be used if the surface monitored can fall past the Empty (P006) level in normal operation. The value is added to Empty (P006) and can be greater than the range of the transducer. If the surface monitored can extend beyond Empty (P006), increase Range Extension (in Units (P005) or % of Span) such that Empty plus Range Extension is greater than the transducer face to furthest surface to be monitored distance. This is often the case with OCM when using weirs and some flumes.

P802 Transducer with Submergence Shield

Used when the transducer is expected to be submerged on occasion.

	Single Point Model		Dual Point Model
Primary Index	Global		Transducer
Values	0	*	Off
	1		Submergence transducer
Related	• P006 Empty • P071 Failsafe Material Level • Relays		

When a transducer with a submergence shield is submerged, the shield traps an air pocket that creates a special echo. The MultiRanger recognizes the echo and advances the reading to the highest level and operates displays and outputs accordingly. This feature is effective for when power is returned while the transducer is submerged.

P803 Shot / Pulse Mode

Determines what type of ultrasonic shots are fired.

Primary Index	Single Point Model		Dual Point Model
	Global		Transducer
Values	1		Short
	2	*	Short and long
Related	• P006 Empty • P805 Echo Confidence • P804 Confidence Threshold • P852 Short Shot Range		

Increases MultiRanger response when the monitored surface is close to the transducer face. Select **short and long** to have short and long acoustic shots fired for each measurement, regardless of the transducer to surface distance. Select **short** to have only short shots fired if the Echo Confidence (P805) produced by a short shot exceeds the short Confidence Threshold (P804) and the monitored surface is always within the Short Shot Range (P852).

P804 Confidence Threshold

Determines which echoes are evaluated by software.

Primary Index	Single Point Model	Dual Point Model
	Global	Transducer
Values	Range: 0 to 99:0 to 99	
	Preset: 10:5	
Related	• P805 Echo Confidence	

The short and long shot Confidence Thresholds are preset to 10 and 5 respectively. When Echo Confidence (P805) exceeds the Confidence Threshold, the echo is evaluated by Sonic Intelligence® . Values are entered as two numbers separated by a decimal point. The first number is the short shot confidence and the second number is the long shot confidence.

Note: The decimal point is replaced with a colon (:) on the display.

P805 Echo Confidence

Displays the echo confidence of the measurement echo from the last shot.

Primary Index	Transducer
Values	Format: x:y (view only)
	x = short (0 to 99)
	y = long (0 to 99)
Related	• P804 Confidence Threshold • P830 TVT Type

Use this feature to monitor the effect of transducer aiming, location, and mechanical transducer / mounting isolation.

Both short and long shot Echo Confidence is displayed. (To display this value in the auxiliary display while the unit is running, press 8 for **4** seconds.)

Display	Description
x:--	short shot confidence value, (long shot not used).
--:y	long shot confidence value, (short shot not used).
x:y	short and long shot confidence values (both used).
E	transducer cable is open or short circuited.
--:--	no shots were processed for Sonic Intelligence® evaluation.

P806 Echo Strength

Displays the strength (in dB above 1 uV RMS) of the echo which was selected as the measurement echo.

Primary Index	Transducer
Values	Format: 0 to 99 (view only)

P807 Noise

Displays the average and peak ambient noise (in dB above 1 uV RMS) being processed.

Primary Index	Transducer
Values	Format: x:y (view only)
	x = average (-99 to 99)
	y = peak (-99 to 99)

The noise level is a combination of transient acoustic noise and electrical noise (induced into the transducer cable or receiving circuitry). See *Noise Problems* in the *Troubleshooting* Section on page 232.

Advanced Echo Processing (P815 to P825)

The following parameters are for authorized Siemens Milltronics Service personnel or technicians familiar with Siemens Milltronics echo processing techniques.

P815 Echo Time Filtered

The time (in ms) from the transmission of the pulse, to when it is processed.

Primary Index	Transducer
Values	Range: 0.0 to 9999 (view only)
Related	• P816 Echo Time Raw

P816 Echo Time Raw

The time (in ms) from the transmit pulse to the processed echo.

Primary Index	Transducer
Values	Range: 0.0 to 9999 (view only)
Related	• P815 Echo Time Filtered

P820 Algorithm

Chooses the algorithm to generate the measured value from the profile.

Primary Index	**Single Point Model**		**Dual Point Model**
	Global		Transducer
Values	1		ALF = flat Area, Largest, and First average
	2		A = flat Area only
	3		L = flat Largest only
	4		F = flat First only
	5		AL = flat Area and Largest average
	6		AF = flat Area and First average
	7		LF = flat Largest and First average
	8	*	bLF = smooth Largest or First
	9		bL = smooth Largest only
	10		bF = smooth First only
	12		tF = true First only
Related	• P805 Echo Confidence • P821 Spike Filter • P822 Narrow Echo Filter • P823 Reform Echo • P825 Echo Marker Trigger		

Use this to select the algorithm(s) the Sonic Intelligence® echo selection is based on. Use P805 Echo Confidence (page 202) to determine which algorithm gives the highest confidence under all level conditions. If the wrong echo is processed, observe the echo processing displays and select an alternate algorithm, either by entering the numeric value desired, or as below:

1. Press MEASURE [%] to display the Auxiliary Function symbol.
2. Press ARROWS [▲] [▼] to access the desired Reading display symbols.
3. Press ENTER [↵] when the required algorithm is displayed.

P821 Spike Filter

Dampens spikes in the echo profile to reduce false readings.

Primary Index	**Single Point Model**		**Dual Point Model**
	Global		Transducer
Values	0		Off
	1	*	On
Related	• P820 Algorithm • P822 Narrow Echo Filter • P823 Reform Echo • P825 Echo Marker Trigger		

Use P821 if interference spikes are on the long shot Echo Profile display.

P822 Narrow Echo Filter

Filters out echoes of a specific width.

Primary Index	**Single Point Model**	**Dual Point Model**
	Global	Transducer
Values	0 = OFF (preset), nearest acceptable value returned	
	greater = wider	
Related	• P820 Algorithm • P821 Spike Filter • P823 Reform Echo • P825 Echo Marker Trigger	

Use this for transducer acoustic beam interference (e.g. ladder rungs). Enter the width of false echoes (in ms) to be removed from the long shot Echo Profile. When a value is keyed in, the nearest acceptable value is entered.

P823 Reform Echo

Smoothes jagged peaks in the echo profile.

	Single Point Model	Dual Point Model
Primary Index	Global	Transducer
Values	0 = OFF (preset)	
	greater = wider, nearest acceptable value returned	
Related	• P002 Material • P820 Algorithm • P821 Spike Filter • P822 Narrow Echo Filter • P825 Echo Marker Trigger	

Use this feature, when monitoring solids (P002 = **2**), if the reported level fluctuates slightly, though the monitored surface is still. Enter the amount (in ms) of long shot Echo Profile smoothing required. When a value is keyed in, the nearest acceptable value is entered.

P825 Echo Marker Trigger

The point on the primary echo on which the measured value is based.

	Single Point Model	Dual Point Model
Primary Index	Global	Transducer
Values	Range: 5 to 95%	
	Preset: 50%	
Related	• P820 Algorithm • P821 Spike Filter • P822 Narrow Echo Filter • P823 Reform Echo	

Use this feature if the reported material level fluctuates slightly, due to a variable rise in the leading edge of the true echo on the Echo Profile.

Enter the value (in percent of echo height) to ensure the Echo Lock Window intersects the Echo Profile at the sharpest rising portion of the Echo Profile representing the true echo. This value is preset to 50%.

Advanced TVT Adjustment (P830 to P835)

The following parameters are for authorized Siemens Milltronics Service personnel or technicians familiar with Siemens Milltronics echo processing techniques.

Advanced TVT control applies to long shots only.

P830 TVT Type

Selects the TVT Curve used.

Primary Index	**Single Point Model**			**Dual Point Model**
	Global			Transducer
Values	1	*	TVT Short Curved	
	2		TVT Short Flat	
	3		TVT Long Flat	
	4		TVT Long Smooth Front	
	5		TVT Long Smooth	
	6		TVT Slopes	
Altered By	• P002 Material			
Related	• P805 Echo Confidence • P835 TVT Slope Min			

Select the TVT type which gives the highest confidence (P805) under all level conditions. Use this parameter with caution, and do not use TVT **Slopes** with the **bF** or **bLF** Algorithm (P820).

P831 TVT Shaper

Turns the TVT Shaper ON or OFF.

Primary Index	**Single Point Model**			**Dual Point Model**
	Global			Transducer
Values	0	*	Off	
	1		On	
Related	• P832 TVT Shaper Adjust			

Turn the TVT Shaper ON before using P832 and afterwards. Turn the TVT Shaper ON and OFF while monitoring the effect to pick up the true echo.

P832 TVT Shaper Adjust

Allows manual adjustment of the TVT curve. Use this parameter in conjunction with Dolphin Plus PC Software.

	Single Point Model	Dual Point Model
Primary Index	Breakpoint	Transducer and Breakpoint
Values	Range: -50 to 50	
	Preset: 0	
Related	• P831 TVT Shaper	

Use this feature to bias the shape of the TVT curve to avoid selecting false echoes from fixed objects.

Adjustment to this parameter is best done while viewing the echo profile with Dolphin Plus. Refer to the Dolphin Plus online help for details.

The TVT curve is divided into 40 breakpoints, accessible by enabling the point number as the breakpoint index field. Each breakpoint is normalized to a value of **0**, as displayed in the parameter value field. By changing the breakpoint value, up or down, the intensity of the bias applied to that breakpoint of the curve is respectively changed. By changing the value of adjacent breakpoints, the effective bias to the shaper can be broadened to suit the desired correction. In the case of multiple false echoes, shaping can be applied along different points of the curve. Shaping should be applied sparingly in order to avoid missing the true echo.

P833 TVT Start Min

Use this feature to adjust the TVT Curve height to ignore false echoes (or pick up true echoes) near the start of the Echo Profile.

	Single Point Model	Dual Point Model
Primary Index	Global	Transducer
Values	Range: -30 to 225	
	Preset: 50	
Related	• P800 Near Blanking • P834 TVT Start Duration	

Enter the minimum TVT Curve start point (in dB above 1 uV RMS).

This feature should only be used if increased Near Blanking (P800) would extend farther than desired into the measurement range.

P834 TVT Start Duration

Use this feature in conjunction with TVT Start Min (P833) to ignore false echoes (or pick up true echoes) near the start of the Echo Profile.

	Single Point Model	Dual Point Model
Primary Index	Global	Transducer
Values	Range: 0 to 9999	
	Preset: 30	
Related	• P833 TVT Start Min • P835 TVT Slope Min	

Enter the time (in ms) for the TVT Curve to decrease from the TVT Start Min (P833) point to the TVT Curve baseline.

P835 TVT Slope Min

Enter the minimum slope (in dB/s) for the middle of the TVT Curve.

	Single Point Model	Dual Point Model
Primary Index	Global	Transducer
Values	Range: 0 to 9999	
	Preset: 200	
Related	• P830 TVT Type • P834 TVT Start Duration	

Use this feature to adjust the slope declination, and use it in conjunction with TVT Start Duration (when a long flat TVT Type is selected) to ensure the TVT Curve remains above the false echoes in the middle of the Echo Profile. Alternatively, if TVT Type is set for **TVT Slopes** (P830 = 6), preset is 2000.

P837 Auto False-Echo Suppression

Use P837 and P838 together, to set MultiRanger 100/200 to ignore false echoes. Use P838 to set the Auto TVT distance first.

Notes:
- This function works best when the vessel is empty or nearly empty: use it only if there is a minimum distance of 2 meters from the transducer face to the material.
- Set P837 and P838 during start up, if possible.
- If the vessel contains an agitator, the agitator should be running.

If MultiRanger 100/200 displays a full level, or if the reading fluctuates between a false high level and a correct level, set P837 to elevate the TVT in this region and to de-sensitize the receiver from any 'base noise' caused by internal transducer reflections, nozzle echoes, or other vessel false echoes. Set P838 and then P837 (detailed instructions follow P838).

Values	**0**	*	Off
	1		Use 'learned' TVT. (See 'learned TVT curve' in Display after Auto False Echo Suppression on page 211.)
	2		Learn

Display before Auto False Echo Suppression (or when P837 = 0)

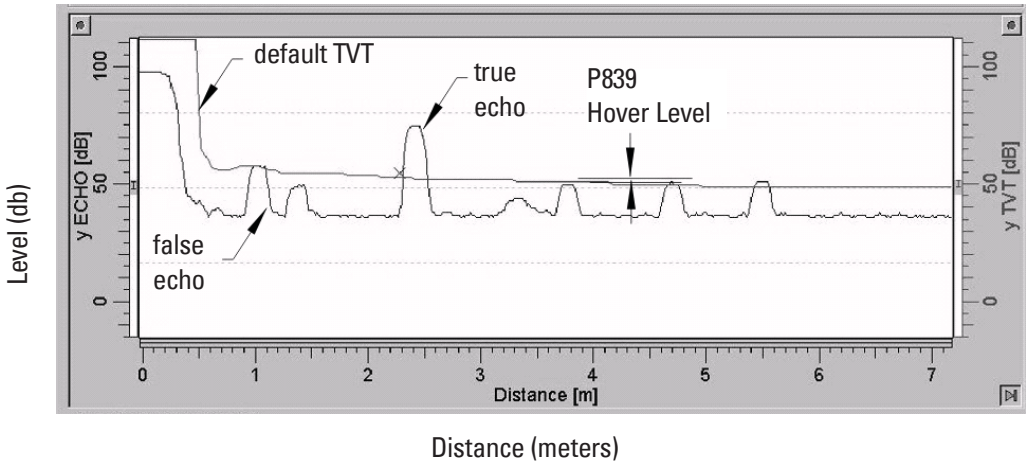

Parameters

P838 Auto False-Echo Suppression Distance

Defines the range of Auto False-Echo Suppression (P837) to use for ignoring false echoes. (Units are defined in P005.)

Values	Range (depends on model)	Maximum range: 0.000 to 15 m (50 ft)
	Default	1.000 m (3.28 ft)

Determine the actual distance from the transducer face to the material surface. Subtract 0.5 m from this distance, and enter the result.

Set Up:

1. Perform this function when the vessel is empty or nearly empty.
2. Determine actual distance from transducer face to material level.
3. Select P838 and key in [distance to material level minus 0.5 m].
4. Press **ENTER** ↵.
5. Select P837.
6. Press **2** and then press **ENTER** ↵. P837 will revert to **1** (use Learned TVT) automatically after a few seconds.

Display after Auto False Echo Suppression

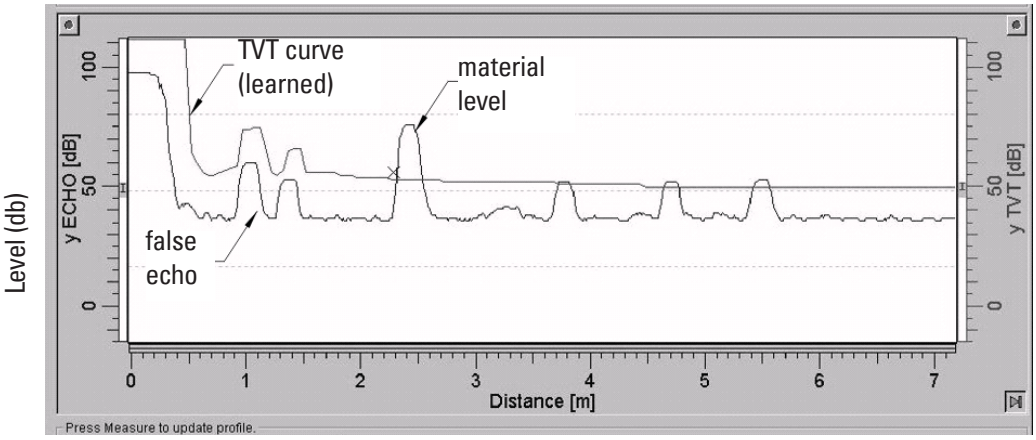

Distance (meters)

P839 TVT Hover Level

Defines (in percent) how high the TVT curve is placed above the profile, relative to the largest echo. When MultiRanger 100/200 is located in the center of the vessel, lower this parameter to prevent multiple echo detections.

Values	Range	**0** to **100%**
	Default	**33** (%)

Advanced Shot Adjustment (P840 to P852)

These parameters are for Siemens Milltronics service personnel only.

P840 Short Shot Number

The number of short shots to be fired (and results averaged) per transmit pulse.

	Single Point Model	Dual Point Model
Primary Index	Global	Transducer
Values	Range: 0 to 100	
	Preset: 1	
Related	• P841 Long Shot Number • P842 Short Shot Frequency • P844 Short Shot Width • P850 Short Shot Bias • P851 Short Shot Floor • P852 Short Shot Range	

P841 Long Shot Number

Enter the number of long shots to be fired (and results averaged) per transmit pulse.

	Single Point Model	Dual Point Model
Primary Index	Global	Transducer
Values	Range: 0 to 200	
	Preset: 5	
Altered By	• P003 Maximum Process Speed	
Related	• P840 Short Shot Number • P843 Long Shot Frequency • P845 Long Shot Width	

This value is automatically altered by Maximum Process Speed (P003).

P842 Short Shot Frequency

Adjust the short shot transmit pulse frequency (in kHz).

Primary Index	Single Point Model	Dual Point Model
	Global	Transducer
Values	Range: 41 to 46 kHz, nearest acceptable value is returned	
Altered By	• P004 Transducer	
Related	• P840 Short Shot Number • P844 Short Shot Width • P850 Short Shot Bias • P851 Short Shot Floor • P852 Short Shot Range	

This feature is automatically altered when Transducer (P004) is altered.

P843 Long Shot Frequency

Adjust the long shot transmit pulse frequency (in kHz).

Primary Index	Single Point Model	Dual Point Model
	Global	Transducer
Values	Range: 41 to 46 kHz, nearest acceptable value is returned	
Altered By	• P004 Transducer	
Related	• P841 Long Shot Number • P842 Short Shot Frequency • P843 Long Shot Frequency • P845 Long Shot Width	

This feature is automatically altered when Transducer (P004) is altered.

P844 Short Shot Width

Adjust the width (in ms) of the short shot transmit pulse.

Primary Index	Single Point Model	Dual Point Model
	Global	Transducer
Values	Range: 0.000 to 5.000	
Altered By	• P004 Transducer	
Related	• P840 Short Shot Number • P842 Short Shot Frequency • P845 Long Shot Width • P850 Short Shot Bias • P851 Short Shot Floor • P852 Short Shot Range	

This feature is automatically altered when Transducer (P004) is altered.

P845 Long Shot Width

Adjust the width (in ms) of the long shot transmit pulse.

	Single Point Model	Dual Point Model
Primary Index	Global	Transducer
Values	Range: 0.000 to 5.000	
Altered By	• P004 Transducer	
Related	• P841 Long Shot Number • P844 Short Shot Width • P843 Long Shot Frequency	

This feature is automatically altered when Transducer (P004) is altered.

P850 Short Shot Bias

Use this feature to slant the echo evaluation in favour of the short shot echo when both short and long shots are evaluated (see Shot Mode, P803).

	Single Point Model	Dual Point Model
Primary Index	Global	Transducer
Values	Range: 0 to 100	
	Preset: 20	
Related	• P803 Shot / Pulse Mode • P840 Short Shot Number • P842 Short Shot Frequency • P844 Short Shot Width • P851 Short Shot Floor • P852 Short Shot Range	

P851 Short Shot Floor

Enter the minimum echo strength (in dB above 1 uV) derived from a short shot to be considered for evaluation.

	Single Point Model	Dual Point Model
Primary Index	Global	Transducer
Values	Range: 30 to 100	
	Preset: 50	
Related	• P840 Short Shot Number • P842 Short Shot Frequency • P844 Short Shot Width • P850 Short Shot Bias • P852 Short Shot Range	

P852 Short Shot Range

Enter the maximum distance in Units (P005) to be measured using short shot echoes.

	Single Point Model	Dual Point Model
Primary Index	Global	Transducer
Values	Range: 0 to 10 m, or equivalent depending on units	
Altered By	• P004 Transducer	
Related	• P840 Short Shot Number • P842 Short Shot Frequency • P844 Short Shot Width • P850 Short Shot Bias • P851 Short Shot Floor	

This feature is automatically altered when Transducer (P004) is altered.

Test (P900 to P913)

Test Parameters are intended for use by Siemens Milltronics Service personnel.

P900 Software Revision Number

View the EPROM Rev. #.

Primary Index	Global
Values	Range: 00.00 to 99.99 (view only)

P901 Memory

Press ENTER ↵ to activate the MultiRanger memory test.

Primary Index	Global		
Values	Display: view only		
	PASS		(memory test successful)
	F1		RAM
	F3		FLASH data
	F4		FLASH code

P902 Watchdog

Press ENTER ↵ to put the CPU into an infinite loop to test the watchdog timer.

On successful completion (10 seconds) the RUN mode is entered and the MultiRanger is reset. Programming is kept and the unit responds as if there had been a power failure.

P903 Display

Press ENTER ↵ to activate the display test.

All LCD segments and symbols are temporarily displayed.

P904 Keypad

Press ENTER ↵ , then press each keypad key in the following sequence:

As each key is pressed, the associated keypad number is displayed. On successful test completion, **PASS** is displayed. **FAIL** is displayed if a key is pressed out of sequence or the programmer keypad malfunctions.

P905 Transmit Pulse

*Press ENTER ↵ to supply repeated transmit pulses, at the frequency entered, to the transducer and / or view the transducer operating frequency (automatically altered by **P004 Transducer**) for the Point Number displayed.*

	Single Point Model	Dual Point Model
Primary Index	Global	Transducer
Values	Range: 42kH to 46KH (view only)	
Altered By	• P004 Transducer	

P906 RS-232 Port

Press ENTER ↵ to test the RS-232 port on the RJ-11.

An external device must be connected to the RS-232 port for this test. On successful completion, **PASS** is displayed, otherwise it is **FAIL**.

P908 Scanner

Press ENTER ↵ to cycle the scanner relay while firing the transmitter.

Use this parameter to ensure that both transducers are being stimulated.

P910 Toggle Relays

Used to energize and de-energize relays directly.

Primary Index	Global
Values	0 to 6
Related	• P119 mA Relay Logic Test

Enter the relay number and then toggle between ***energized*** and ***de-energized***, as required. Enter **0** to toggle all relays at once.

Applies only to relays with P119 = 0 (algorithm control). Use this parameter to confirm that relay contacts are opening and closing.

This feature is helpful when P119 does not give expected results even though programming was verified.

P911 mA Output Value

Access this parameter to display the current value of the mA output.

Primary Index	mA output
Values	Range: 0.10 to 25.00
Related	• P200 mA Output Range • P201 mA Output Function

Additionally, this feature may be used to enter a desired value. The mA output immediately assumes the value entered regardless of any restrictions programmed.

P912 Transducer Temperature

Use this feature to display the temperature in °C (as monitored by the connected transducer).

Primary Index	Transducer
Values	Range: -50 to 150

Err is displayed if the transducer is not equipped with an internal temperature sensor.

P913 Sensor Temperature

Access this parameter to display the temperature in °C (as monitored by the TS-3).

Primary Index	Global
Values	Range: -50 to 150

OPEn is displayed if a TS-3 is not connected.

P914 mA Input [MR 200]

Use this feature to display the mA input value (in mA).

Primary Index	mA input
Values	Range: 0.000 to 24.00

Measurement (P920 to P927)

All of these parameters are available in RUN mode and used to verify programming. See *Readings in RUN Mode* on page 23.

The range and values shown for each of these parameters depends on the Operation (P001) chosen. The readings for each operation are listed below.

To Access in RUN Mode

1. Ensure the device is in RUN mode.
2. Press .The Auxiliary Reading field becomes underscores P_ _ _
3. Type the parameter number. The field changes to the value of the specified parameter.

These parameters are also available in simulation mode. See the *Testing the Configuration* section page 85 for instructions on how to control the simulation direction and rate.

P920 Reading Measurement

Corresponds to the final reading after all programming is applied.

Please note that the following features apply only to the MultiRanger 200: Difference, Average, OCM, and Pump Totalizer.

Primary Index	Level
Values	Range: -999 to 9999

In general this means that: P920 = (Reading x P061) + P062.

Reading Measurements by Operation

P001	P050 = 0	P050 ≠ 0
0 – OFF	- - - -	- - - -
1 – Level	P921	P924
2 – Space	P922	100% - P924
3 – Distance	P927	P927
4 – Difference **[MR 200]**	P921 (indexed)	P921 (indexed)
5 – Average **[MR 200]**	P921 (indexed)	P921 (indexed)
6 – OCM **[MR 200]**	P925	P925
7 – Pump Totalizer **[MR 200]**	P924	P924

P921 Material Measurement

The distance in Units (P005) or % of Span (P007) between Empty (P006) and the monitored surface.

Primary Index	Level
Values	Range: -999 to 9999 (view only)
Related	• P005 Units • P006 Empty • P007 Span

P922 Space Measurement

The distance between the monitored surface and Span (P007).

Primary Index	Transducer
Values	Range: 0.000 to 9999 (view only)
Related	• P007 Span

P923 Distance Measurement

The distance between the monitored surface and the transducer face.

Primary Index	Transducer
Values	Range: 0.000 to 9999 (view only)

P924 Volume Measurement [MR 200]

The calculated vessel capacity in Max Volume (P051) or % of Max Volume.

Please note that Volume Measurement is a MultiRanger 200 feature only.

Primary Index	Level
Values	Range: 0.000 to 9999 (view only)
Related	• P051 Maximum Volume

P925 Flow Measurement [MR 200]

The calculated flowrate in Max Flow (P604) units or % of Max Flow.

Please note that Flow Measurement is a MultiRanger 200 feature only.

	Single Point Model	Dual Point Model
Primary Index	Global	Transducer
Values	Range: 0.000 to 9999 (view only)	
Related	• P604 Maximum Flow	

P926 Head Measurement [MR 200]

Corresponds to Head (the distance from Zero Head (P605) to the monitored surface in Units (P005) or % of Span (P007).

Please note that Head Measurement is a MultiRanger 200 feature only.

	Single Point Model	Dual Point Model
Primary Index	Global	Transducer
Values	Range: -999 to 9999 (view only)	
Related	• P005 Units • P007 Span • P605 Zero Head	

P927 Distance Measurement

The distance between the surface and the transducer face (displays only as % of Empty).

Primary Index	Transducer
Values	Range: 0.000 to 9999% (Displays as % of Empty) (view only)
Related	• P005 Units • P006 Empty

Use P923 unless the distance information is required in percent.

Master Reset (P999)

This feature resets all parameters to original values.

	Single Point Model	Dual Point Model
Primary Index	Global	Transducer
Values	See below.	

Use this feature prior to initial programming if arbitrary Parameter Values were used during a **bench test**, or after upgrading the software. Following a Master Reset, complete reprogramming is required.

To perform a Master Reset, access P999 and press CLEAR [c] [↵]. **C.ALL** displays until the reset is complete.

In dual point units, both points can be reset at the same time by setting the index to **00** and pressing the CLEAR [c] [↵] keys.

CAUTION: be careful when using this feature. All data for all points will be reset. For convenience, be sure to record the values you want to re-enter.

Notes:

Appendix A: Index Types

Index types

Name	Description	# of indexes
Global	This parameter applies to the entire unit	n/a
View only	This parameter can not be set, only viewed	n/a
Breakpoint	Indexed by breakpoint	Parameter dependent
Dimension	Indexed by PMD dimension	up to 7
Discrete Input	Indexed by discrete input	2
Echo Profile	Indexed by stored echo profile	10
Level Point[1]	Indexed by level point	1, 2 or 3
mA input[1]	Indexed by mA input	1
mA output[1]	Indexed by mA output	0 or 2
Comm. Port	Indexed by communications port	2
Relay	Indexed by relay	3 or 6
Transducer[2]	Indexed by transducer	1 or 2

1. **MultiRanger 100:** The two level points are: Transducer One and Transducer Two.
   Level point typically has 1 index in Single Point Mode (standard), and 2 indexes in Dual Point Mode (optional).
   MultiRanger 200: The three level points are: transducer 1, transducer 2, and the calculated point which can be difference (P001=4) or average (P001=5).
   Level point typically has 1 index in Single Point Mode (standard), and 2 indexes in Dual Point Mode (optional). A third index is available in both modes when Operation (P001) is set for DPD (P001=4) or DPA (P001=5).

2. **MultiRanger 200:** The number of indexes available in Single Point Mode (standard) is typically 1, but can be expanded to 2 if Operation (P001) is set for DPD (P001=4) or DPA (P001=5).
   In Dual Point Mode (optional), the number of available indexes is always 2.

Transmit Pulse

The transmit pulse consists of one or more electrical “shot” pulses, which are supplied to the transducer connected to the MultiRanger terminals. The transducer fires an acoustic “shot” for each electrical pulse supplied. After each shot is fired, sufficient time is provided for echo (shot reflection) reception before the next (if applicable) shot is fired. After all shots of the transmit pulse are fired, the resultant echoes are processed. The transmit pulse shot number, frequency, duration, delay, and associated measurement range are defined by parameters P803 and P840 to P852.

Echo Processing

Echo processing consists of echo enhancement, true echo selection, and selected echo verification.

Echo Enhancement is achieved by filtering (P821 and P822) and reforming (P823) the echo profile. The true echo (echo reflected by the intended target) is selected when that portion of the echo profile meets the evaluation criteria of Sonic Intelligence® . Insignificant portions of the echo profile outside of the measurement range (Span P006 + Range Extension P801), below the TVT Curve (P830, and P832 to P835), and less than the Confidence Threshold (P804) and Short Shot Floor (P851) are automatically disregarded. The remaining portions of the Echo Profile are evaluated using the Algorithm (P820) and Short Shot Bias (P850). The Echo Profile portion providing the best Echo Confidence (P805) is selected.

True echo verification is automatic. The position (relation in time after transmit) of the new echo is compared to that of the previously accepted echo. When the new echo is within the Echo Lock Window (P713), it is accepted and displays, outputs, and relays are updated per the Fuzz Filter (P710) and Rate Parameters (P700 to P703). If the new echo is outside of the Window, it is not accepted until Echo Lock (P711) requirements are satisfied.

Dolphin Plus Display

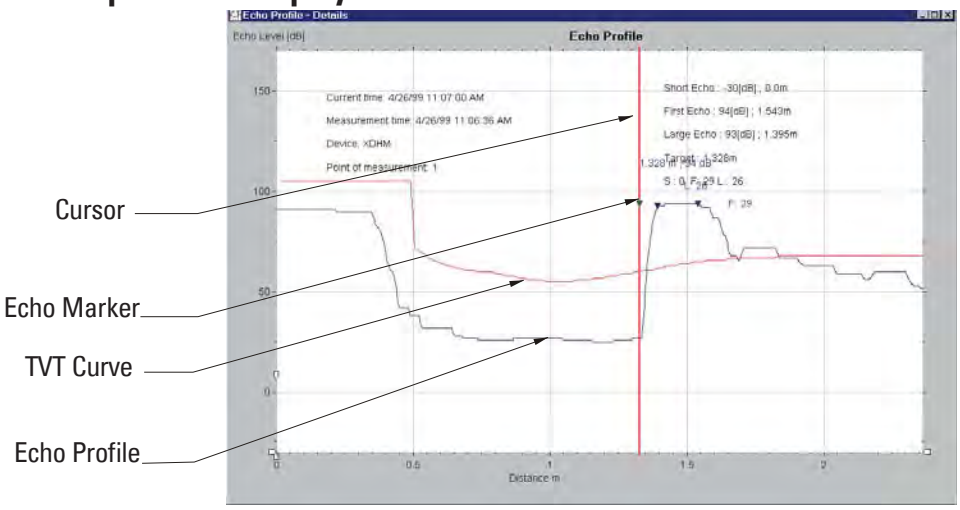

TVT (Time Varying Threshold) curves

A TVT curve describes a threshold below which any echoes will be ignored. The default TVT curve is used, until P837 and P838 are used to create a new 'learned TVT curve'.

Auto False-Echo Suppression

False echoes can be caused by an obstruction in the beam path (pipes, ladders, chains, and such). Such false echoes may rise above the default TVT curve.

P838 allows you to set a distance, and P837 then instructs the MultiRanger to 'learn' where the obstructions/false echoes are within that distance. The new TVT curve is set above the false echoes, screening them out.

Display before Auto False Echo Suppression (or when P837 = 0)

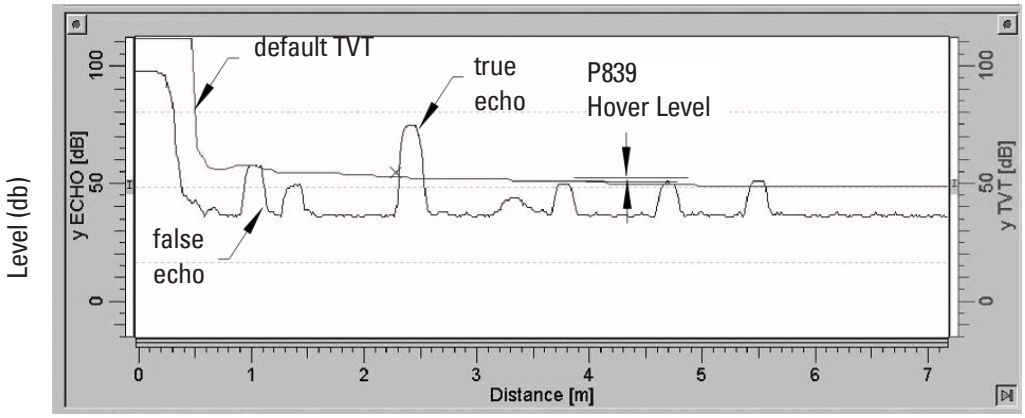

Display after Auto False Echo Suppression

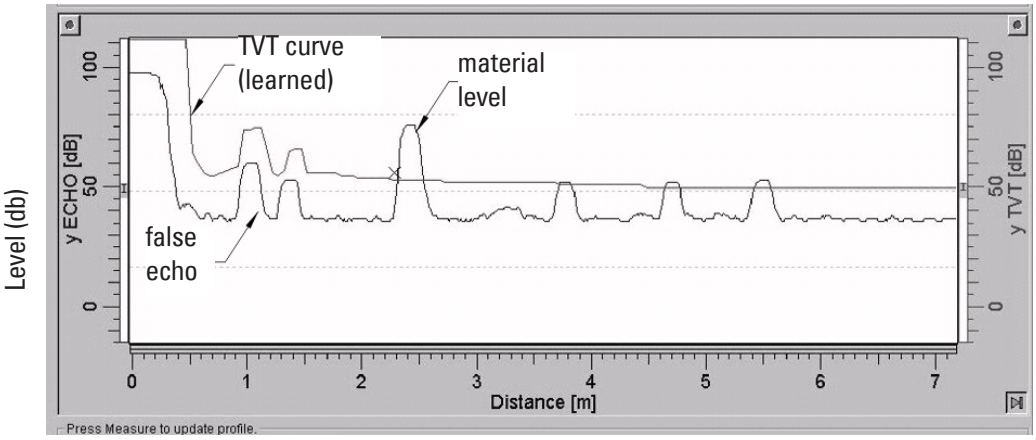

Distance Calculation

To calculate the transducer to material level (object) distance, the transmission medium (atmosphere) sound velocity (P653) is multiplied by the acoustic transmission to reception time period. This result is divided by 2 to calculate the one way distance.

Distance = Sound Velocity x Time / 2

The Reading displayed is the result of performing any additional modification to the calculated distance (as determined by Operation P001, Units P005, Volume Conversion, P050 to P054, Reading, P060 to P063, OCM, P600 to P611, and/or Totalizer P622 to P633 parameters).

Sound Velocity

The sound velocity of the transmission medium is affected by the type, temperature, and vapor pressure of the gas or vapor present. As preset, the MultiRanger assumes the vessel atmosphere is air at 20°C (68°F). Unless altered, the sound velocity used for the distance calculation is 344.1 m / s (1129 ft / s).

Variable air temperature is automatically compensated when a Siemens Milltronics ultrasonic / temperature transducer is used. If the transducer is exposed to direct sunlight, use a sunshield or a separate TS-3 temperature sensor.

Also, if the temperature varies between the transducer face and the liquid monitored, use a TS-3 temperature sensor (submerged in the liquid) in combination with an ultrasonic / temperature transducer. Set Temp Source (P660) for **both**, to average the transducer and TS-3 measurements.

Atmosphere composition other than air can pose a challenge for ultrasonic level measurement. However, excellent results may be obtained by performing a Sound Velocity Calibration (P651) if the atmosphere is homogeneous (well mixed), at a fixed temperature, and under consistent vapor pressure.

The MultiRanger automatic temperature compensation is based on the sound velocity / temperature characteristics of “air” and may not be suitable for the atmosphere present. If the atmosphere temperature is variable, perform frequent Sound Velocity Calibrations to optimize measurement accuracy.

Sound Velocity calibration frequency may be determined with experience. If the sound velocity in two or more vessels is always similar, future calibrations may be performed on one vessel and the resultant Velocity (P653) entered directly for the other vessel(s).

If the sound velocity of a vessel atmosphere is found to be repeatable at specific temperatures, a chart or curve may be developed. Then, rather than performing a Sound Velocity Calibration each time the vessel temperature changes significantly, the anticipated Velocity (P653) may be entered directly.

Scanning

MultiRanger 100/200

When echo processing is complete (if more than 1 vessel is monitored) the scanning relay changes state to supply the transmit pulse to the other transducer after the Scan Delay (P727).

Scan Delay is automatically set by Maximum Process Speed (P003). When high speed scanning is required (sometimes the case for equipment position monitoring), the Scan Delay may be reduced. Reduce the Scan Delay only as required, otherwise premature scanning relay fatigue could occur.

MultiRanger 200

When two transducers are connected and configured in a dual point unit, the MultiRanger will scan each in turn via the scanner relay. When a single point MultiRanger is programmed for **differential** or **average** level Operation (P001 = 4 or 5), two transducers of the same type must be used.

Volume Calculation [MR 200]

Please note that the Volume Calculation feature is only available on the MultiRanger 200.

The unit provides a variety of volume calculation features (P050 to P055).

If the vessel does not match any of the eight preset Tank Shape calculations, a Universal Volume calculation may be used. Use the level/volume graph or chart provided by the vessel fabricator (or create one based on the vessel dimensions). Based on the graph, choose the Universal Volume calculation, and select the level vs. volume breakpoints to be entered (32 max). Generally, the more breakpoints entered, the greater the accuracy.

Universal, Linear (P050 = 9)

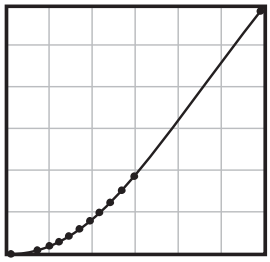

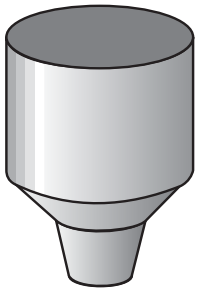

This volume calculation creates a piece-wise linear approximation of the level/volume curve. This option provides best results if the curve has sharp angles joining relatively linear sections.

Enter a Level Breakpoint at each point where the level/volume curve bends sharply (2 minimum).

For combination curves (mostly linear but include one or more arcs), enter numerous breakpoints along the arc, for best volume calculation accuracy.

Universal, Curved [MR 200]

Please note that the Universal, Curved feature is only available on the MultiRanger 200.

Set P050 = 10

This calculation creates a cubic spline approximation of the level/volume curve, providing best results if the curve is non-linear, and there are no sharp angles.

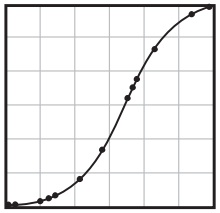

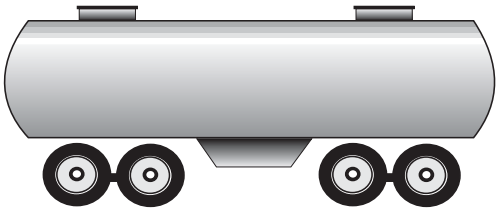

Select at least enough breakpoints from the curve to satisfy the following:

- two breakpoints very near the minimum level
- one breakpoint at the tangent points of each arc
- one breakpoint at each arc apex
- two breakpoints very near the maximum level

For combination curves, enter at least two breakpoints immediately before and after any sharp angle (as well as one breakpoint exactly at the angle) on the curve.

Flow Calculation

Please note that the Flow Calculation feature is only available on the MultiRanger 200.

The MultiRanger provides numerous OCM flow calculation features (P600 to P611).

If the PMD (primary measuring device) does not match any of the eight preset PMD calculations, or if a PMD is not used, select a Universal Volume calculation. Use the head/flow graph or chart provided by the PMD fabricator (or create one based on the PMD or channel dimensions).

Based on the graph, choose the Universal Flow calculation, and select the head versus flow breakpoints to be entered (32 max). Generally, the more breakpoints entered, the greater the flow calculation accuracy.

Universal, Linear [MR 200]

Please note that the Universal, Linear feature is only available on the MultiRanger 200.

Set P600 = 4.

This flow calculation creates a piece-wise linear approximation of the head/flow curve. This option provides best results if the curve has sharp angles joining relatively linear sections.

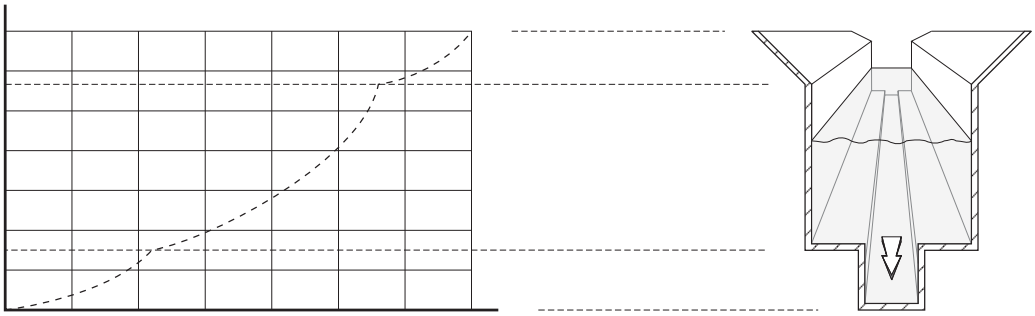

Enter a Head Breakpoint at each point where the head/flow curve bends sharply (2 minimum). For combination curves (mostly linear but include 1 or more arcs), enter numerous breakpoints along the arc, for best flow calculation accuracy.

See also *Typical Flow Characterization* on page 83.

Universal, Curved [MR 200]

Please note that the Universal, Curved feature is only available on the MultiRanger 200.

This calculation creates a cubic spline approximation of the head/flow curve, providing best results if the curve is non-linear, and there are no sharp angles.

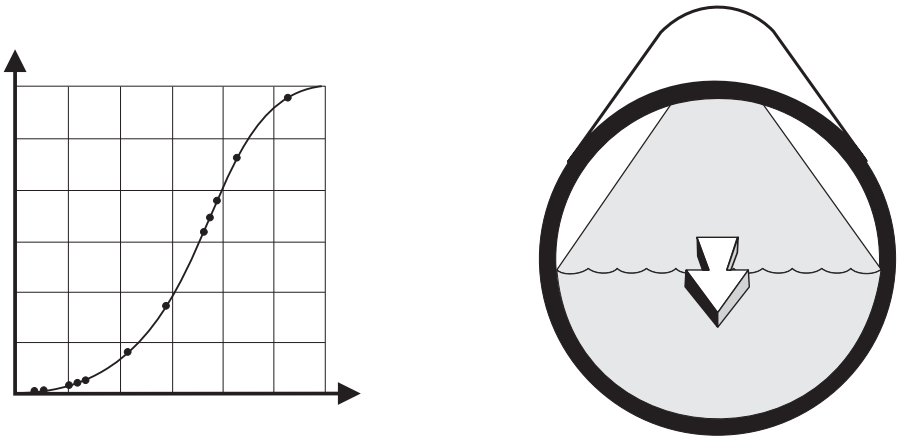

Select at least enough breakpoints from the curve to satisfy the following:

- two breakpoints very near the minimum head
- one breakpoint at the tangent points of each arc
- one breakpoint at each arc apex
- two breakpoints very near the maximum head

For combination curves, enter at least 2 breakpoints immediately before and after any sharp angle (as well as 1 breakpoint exactly at the angle) on the curve. For more information, go to *Typical Flow Characterization* on page 83.

Maximum Process Speed

The MultiRanger's ability to respond to material level changes is designed to exceed even the most demanding installation requirements.

The Maximum Process Speed setting automatically presets various parameters affecting the MultiRanger response to material level changes as follows:

Parameter (units)	Values Dependent on Maximum Process Speed (P003) 1 (slow)	2 (medium)	3 (fast)
P070 Failsafe Timer (min)	100	10	1
P700 Max Fill Rate (m/min)	0.1	1	10
P701 Max Empty Rate (m/min)	0.1	1	10
P702 Filling Indicator (m/min)	0.01	0.1	1
P703 Emptying Indicator (m/min)	0.01	0.1	1
P704 Rate Filter (option)	4	2	2
P710 Fuzz Filter (% of Span)	100	50	10
P713 Echo Lock Window	(per P701 / P702 and time since last valid measurement)		
P727 Scan Delay (seconds)	5	5	3
P841 Long Shot Number	10	5	2

If any of these parameters are independently altered, a Maximum Process Speed (P003) parameter alteration automatically resets the independently altered value.

Slower Maximum Process Speed (P003) provides greater measurement reliability. Faster, independently set Max Fill (P700) and Max Empty (P701). Rates may be impeded by Echo Lock (P711), Scan Delay (P727), and Shot Delay (P728) values.

Appendix C: Troubleshooting

Note: Many of the parameters and techniques described here require extensive knowledge of ultrasonic technologies and Siemens Milltronics echo processing software. Use this information with caution.

If the setup becomes too confusing use P999 to reset and start again.

Common Problems Chart

Symptom	Cause	Action
Display blank, transducer not pulsing.	No power.	Check power supply, wiring, or power fuse.
No response to programmer.	Obstructed infrared interface, defective programmer.	Check programmer usage: 15 cm (6") from faceplate pointed at upper target.
Displays **Short** and **tb:(#).**	Short circuited transducer cable, or defective transducer at indicated terminal block number.	Repair or replace as necessary.
Displays **Open** and **tb:(#).**	Transducer not connected or connection reversed.	Check connection to displayed terminal blocks.
	Open circuited transducer cable, or defective transducer at indicated terminal block number.	Repair or replace as necessary.
Displays **LOE.**	Weak or non-existent echo.	Relocate and/or re-aim transducer at material.
		Proceed to Measurement Difficulties.
Displays **Error** and **tb:(#)**.	Wrong transducer selected (P004).	Verify transducer type and re-enter value.
	Transducer connected in "two wire" method.	Do not tie white and shield together. Use all three terminal blocks.
	Transducer connected backwards.	Reverse black and white wires on terminal block.
Displays **EEEE**	Value too large to display in 4 or 5 characters.	Select larger Units (P005), or lower Convert Reading (P061).
Reading fluctuates while material level is still (or vice versa).	Incorrect measurement stabilization.	Alter Maximum Process Speed (P003) or damping (P704) accordingly. See *Maximum Process Speed*.
Reading is fixed, regardless of the actual material level.	Transducer acoustic beam obstructed, standpipe too narrow, or transducer ringing (reads over 100%).	Relocate and / or re-aim transducer at material level or object.
		Proceed to Measurement Difficulties below.
		See also: *Transducer Ringing*.
Material level reported is always incorrect by the same amount.	Incorrect Empty (zero) reference for level operation (P001 = 1).	See Empty (P006), Reading Offset (P063), Offset Calibration (P650), & Offset Correction (P652).
Measurement accuracy improves as level nears transducer.	Incorrect Sound Velocity used for distance calculation.	Use a transducer with a built-in temperature sensor or a TS-3 temperature sensor.
		See *Sound Velocity*.
Reading is erratic, with little or no relation to material level.	True echo too weak or wrong echo being processed.	Relocate and / or re-aim transducer at material.
		Check noise parameters. See *Noise Problems*.

Noise Problems

Incorrect readings can be the result of noise problems, either acoustic or electrical, in the application.

The noise present at the input to the ultrasonic receiver can be determined by viewing parameter P807. The display reads ##:##, where the first number is the average noise and the second is the peak noise. In general, the most useful value is the average noise.

With no transducer attached the noise is under 5 dB. This is often called the noise floor. If the value with a transducer attached is greater than 5 dB, then signal processing problems can occur. High noise decreases the maximum distance that can be measured. The exact relationship between noise and maximum distance is dependent on the transducer type and the material being measured. Any average noise level greater than 20 dB is probably cause for concern unless the distance is much shorter than the maximum for the transducer.

Determine the Noise Source

Disconnect the transducer from the MultiRanger. If the measured noise is below 5 dB, then continue here. If the measured noise is above 5 dB go to *Non-Transducer Noise Sources* below.

1. Connect only the shield wire of the transducer to the MultiRanger. If the measured noise is below 5 dB, continue with the next step. If the noise is above 5 dB, go to Common Wiring Problems.
2. Connect the white and black transducer wires to the MultiRanger. Record the average noise.
3. Remove the positive wire of the transducer. Record the average noise.
4. Re-connect the positive wire and remove the negative wire. Record the average noise.

Using the table below, determine the appropriate next step. The terms higher, lower and unchanged refer to the noise recorded in the previous steps.

These are guidelines only. If the suggested solution does not solve the problem, try the other options also.

	- removed	+ removed	Go to:
noise	higher	higher	Reducing Electrical Noise
		unchanged	Common Wiring Problems
		lower	Reducing Acoustical Noise
	unchanged	higher	Reducing Electrical Noise
		unchanged	Contact Siemens Milltronics
		lower	Reducing Acoustical Noise
	lower	higher	Common Wiring Problems
		unchanged	Common Wiring Problems
		lower	Reducing Acoustical Noise

Acoustical Noise

To confirm that the problem is acoustical, place several layers of cardboard over the face of the transducer. If the noise is reduced, the noise is definitely acoustical.

Non-Transducer Noise Sources

Remove all input and output cables from the MultiRanger individually while monitoring the noise. If removing a cable reduces the noise, that cable may be picking up noise from adjacent electrical equipment. Check that low voltage cables are not being run adjacent to high voltage cables or near to electrical noise generators such as variable speed drives.

Filtering cables is an option but is not recommended unless all other options have been exhausted.

The MultiRanger is designed to work near heavy industrial equipment such as variable speed drives. Even so, it should not be located near high voltage wires or switch gear.

Try moving the electronics to a different location. Often moving the electronics a few meters farther from the source of noise will fix the problem. Shielding the electronics is also an option, but it should be a last resort. Proper shielding is expensive and is difficult to install properly–the shielding box must enclose the MultiRanger electronics completely, and all wires must be brought to the box through grounded metal conduit.

Common Wiring Problems

- Make sure that the transducer shield wire is connected at the electronics end only. Do not ground it at any other location.
- Do not connect the transducer shield wire to the white wire.
- The exposed transducer shield wire must be as short as possible.
- Connections between the wire supplied with the transducer, and any customer installed extension wire should be done in grounded metal junction boxes.

On Siemens Milltronics transducers the white wire is negative and the black wire is positive. If the extension wire is colored differently, make sure that it is wired consistently.

Extension wire must be shielded twisted pair. Older MultiRanger products may have included recommendations to use co-axial cable for noise reduction purposes. This is no longer the case. Use shielded twisted pair. See the installation section for specifications.

Reducing Electrical Noise

- Ensure that the transducer cable does not run parallel to other cables carrying high voltage or current.
- Move the transducer cable away from noise generators like variable speed drives.
- Put the transducer cable in grounded metal conduit.
- Filter the noise source.

Reducing Acoustical Noise

- Move the transducer away from the noise source.
- Use a stilling well.
- Install a rubber or foam bushing or gasket between the transducer and the mounting surface.
- Relocate or insulate the noise source.
- Change the frequency of the noise. The MultiRanger is only sensitive to noise between 25 KHz and 65 KHz.

Measurement Difficulties

If the Failsafe Timer (P070) expires due to a measurement difficulty, LOE flashes alternately with the last known Reading. In rare cases, the MultiRanger may lock on to a false echo and report a fixed or wrong reading.

Flashing LOE Display

The loss of echo (LOE) display appears when the echo confidence is below the threshold value set in P805 Echo Confidence.

LOE occurs when:

- The echo is lost and no echo is shown above the ambient noise. See low echo confidence (P805) and low echo strength (P806).
- Two echoes are too similar to differentiate. See low echo confidence (P805) and low echo strength (P806).

If LOE is displayed, check the following:

- Surface monitored is within the transducer maximum range
- Transducer model (P004) matches the transducer used
- Transducer is located and aimed properly
- Transducer is not submerged without a submergence shield

Adjust Transducer Aiming

See the transducer manual for range, mounting, and aiming details. For optimum performance, adjust transducer aiming to provide the best Echo Confidence (P805) and Echo Strength (P806) for all material levels within the measurement range.

The most efficient method of checking echoes is with Siemens Milltronics Dolphin Plus software.

Displaying Echoes

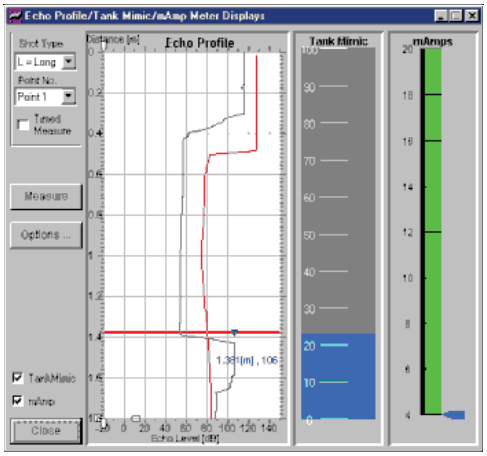

Use Dolphin Plus to graphically display the echo profile at the installation. Interpret the echo profile and change relevant parameters.

Editing Parameters

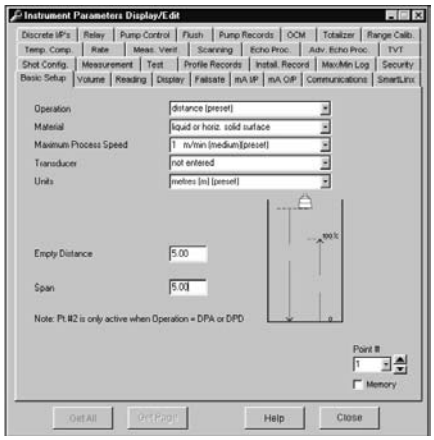

Edit the parameter values. Use F1 to get online help at any time.

To display Echo Confidence in the RUN mode

Press 8 and hold for four seconds (Failsafe Time Left changes to the Short:Long Confidence display).

To display Echo Confidence in the program mode, access the Echo Confidence (P805) parameter.

To update the value displayed after each aiming adjustment..

Press ⬇ (five times or more to verify stability and overcome any echo lock P711).

Increase Failsafe Timer Value

Increase the Failsafe Timer (P070) value, if failsafe operation will not be compromised by the larger value.

Try this only if LOE shows for short periods of time.

Install a Transducer with a Narrower Beam

Sometimes the interference echoes from the sides of a vessel can cause the MultiRanger to lock onto a consistent, incorrect level. Try installing a longer range (narrower beam) transducer, enter the new transducer model (P004), and (if necessary) optimize aiming and frequency again.

Always contact your Siemens Milltronics service personnel before selecting a transducer to solve this type of problem.

Use Dolphin Plus to Debug Echo

If a narrower beam transducer is not available, use Dolphin Plus to view live sonic profiles and make adjustments to the Advanced Echo Processing parameters.

Fixed Reading

If the Reading is a fixed value, regardless of the transducer to material surface distance, ensure the:

1. Transducer acoustic beam is free from obstruction.
2. Transducer is properly aimed
3. Transducer is not in contact with any metal object.
4. Material mixer (if used) is operating while the MultiRanger is operating. If it is stopped, ensure that the mixer blade is not stopped under the transducer.

Obstructions in the Sound Beam

Check for (and remove if present) any acoustic beam obstruction, or relocate the transducer.

If an obstruction cannot be removed or avoided, adjust the Time Varying Threshold (TVT) Curve to reduce the Echo Confidence derived from the sound reflected by the obstruction. Use Dolphin Plus to adjust the TVT curve. (See *P832: TVT Shaper.*)

Nozzle Mountings

If the transducer is mounted on or in a nozzle, grind smooth any burrs or welds on the inside or open end (the end that opens into the vessel). If the problem persists, install a

larger diameter or shorter length nozzle, bevel the inside of the bottom end, or cut the open end of the nozzle at a 45° angle.

See the transducer manual for complete mounting instructions.

For ST-series and XPS-10 transducers use the plastic conduit / flange adapter supplied with the unit.

If the mounting hardware is over tightened, loosen it. Over tightening changes the resonance characteristics of the transducer and can cause problems.

Set the MultiRanger to Ignore the Bad Echo

If the preceding remedies have not fixed the problem, the false echo has to be ignored.

If the Echo is Close to the Transducer

If there is a static, incorrect, high level reading from the MultiRanger there is probably something reflecting a strong echo back to the transducer. If the material level never reaches that point extend the Near Blanking (P800) to a distance to just past the obstruction.

Adjust the TVT to Ignore the Echo

Use Auto False Echo Suppression (P837-P839) to automatically shape around false echoes.

Wrong Reading

If the Reading is erratic, or jumps to some incorrect value periodically, ensure the:

1. Surface monitored is not beyond the MultiRanger's programmed range or the transducer's maximum range.
2. Material is not falling into the transducer's acoustic beam.
3. Material is not inside the blanking distance of the transducer.

Types of Wrong Readings

If a periodic wrong Reading is always the same value, see *Fixed Reading*.

If the wrong Reading is random, ensure the material surface to transducer distance is less than the Empty value entered plus 20%. If the material/object monitored is outside this distance, increase Range Extension (P801) as required. This error is most common in OCM applications using weirs.

Liquid Splashing

If the material monitored is a liquid, check for splashing in the vessel. Enter a lower Maximum Process Speed (P003) value to stabilize the Reading, or install a stilling well. (Contact Siemens Milltronics or your local distributor.)

Adjust the Echo Algorithm

Use Dolphin Plus to view live sonic profiles and make adjustments to the P820 Algorithm parameter. See P820 on page 204 for details.

If the "Area" algorithm is used and narrow noise spikes are evident on the (long shot) Echo Profile, turn the Spike Filter (P821) on and/or widen the Narrow Echo Filter (P822). Also, if the true echo has jagged peaks, use Reform Echo (P823).

If multiple echoes appear on the Echo Profile, typical of a flat material profile (especially if the vessel top is domed), use the “first” Algorithm.

If the Echo Profile repeatedly switches from short to long, adjust the Short Shot Range (P852) to stabilize the “shot” mode used for the echo evaluation. Also, adjust the Short Shot Bias to increase (or decrease the amount of preference given to short shot echoes over long shot echoes.

Should a stable measurement still not be attainable, contact Siemens Milltronics or your local distributor.

Transducer Ringing

If the transducer is mounted too tightly, or if it is mounted so that its side touches something, its resonance characteristics change and this can cause problems.

Normal Ring Down

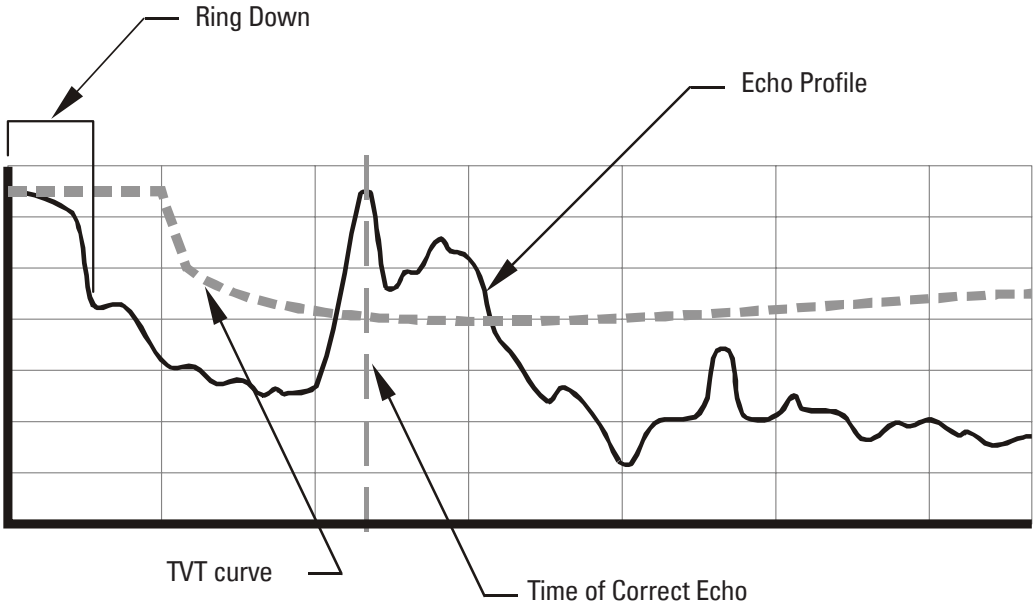

Poor Ring Down

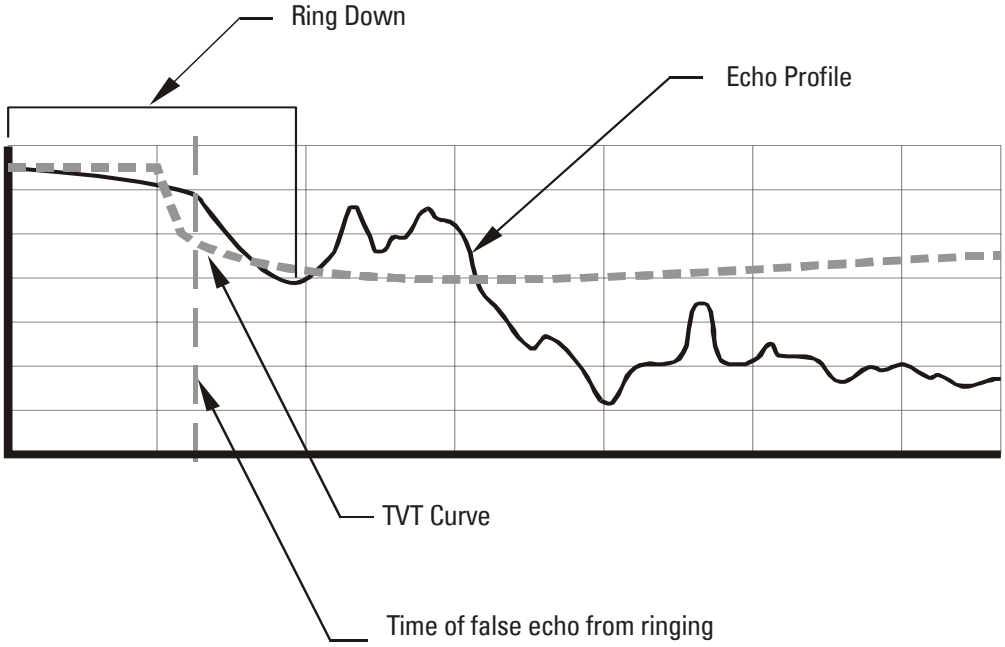

Ring down times that extend past the near blanking area can be interpreted by the MultiRanger as the material level and are characterized by a steady high level being reported.

Unit Repair and Excluded Liability

All changes and repairs must be done by qualified personnel and applicable safety regulations must be followed. Please note the following:

- The user is responsible for all changes and repairs made to the device.
- All new components must be provided by Siemens Milltronics Process Instruments Inc.
- Restrict repair to faulty components only
- Do not re-use faulty components.

Appendix D: Pump Control Reference

Please note that some pump control features apply to the MultiRanger 200 only.

The MultiRanger has the pump control strategies to solve nearly any water / wastewater application. This section details these strategies for engineers requiring in-depth knowledge of the system and how it operates.

Pump Control Options

The various methods of pump control are made up of a combination of two control variables:

Pump Duty

The pump duty indicates in what sequence pumps are started.

Pump Start Method

The start method indicates whether new pumps start and run with any currently running pumps (most common) or whether new pumps start and shut off currently running pumps.

Pump Groups

The MultiRanger groups pumps that use identical pumping strategies based on the value of Relay Control Function (P111). Generally, one group of pumps corresponds to one wet well or reservoir.

Pump by Rate [MR 200]

Please note that this feature applies to the MultiRanger 200 only.

To trigger pump starts by the rate of change in material level use P121–Pump by Rate (P121). New pumps are started, one at a time, until the rate setpoint (Filling Indicator (P702), or Emptying Indicator(P703)) is reached.

Pump Control Algorithms

Please note that the MultiRanger 100 and the MultiRanger 200 use this feature differently.

MultiRanger 100

All of these algorithms can be used to start multiple pumps (assist).

MultiRanger 200

All of these algorithms can be used to start multiple pumps (assist) or one pump at a time (backup).

The MultiRanger 100 and MultiRanger 200 have three main methods of pump control:

Fixed

Starts pumps based on individual setpoints and always starts the same pumps in the same sequence.

Alternate

Starts pumps based on the duty schedule and always leads with a new pump.

Service Ratio

Starts pumps based on user-defined ratio of running time.

Fixed Duty Assist (P111 = 50)

Ties the indexed pump relay directly to the indexed setpoint.

Relay Operation (for P118 = 2)

The relay contact closes at the ON setpoint and opens at the OFF setpoint. Multiple relay contacts in the pump group can be closed at the same time.

Relay Table

The following table shows relay status when each setpoint is reached.

Setpoints Index	Relays 1	2	3
On 3	On	On	On
On 2	On	On	Off
On 1	On	Off	Off
Off 0	Off	Off	Off

Fixed Duty Backup (P111 = 51) [MR 200]

Ties the indexed pump relay directly to the indexed setpoint.

Please note that this feature applies to the MultiRanger 200 only.

Relay Operation (for P118 = 2)

The relay contact closes at the ON setpoint and opens at the OFF setpoint. When a new relay trips the previously closed relay contact opens to shut down the running pump.

Only one relay contact in the pump group can be closed at any one time.

Relay Table

The following table shows relay status when each setpoint is reached.

Setpoints	Index	Relays 1	2	3
	On 3	Off	Off	On
	On 2	Off	On	Off
	On 1	On	Off	Off
	Off 0	Off	Off	Off

Alternate Duty Assist (P111 = 52)

Alternates the lead pump each time the material level cycles and runs all pumps together.

Relay Operation (for P118 = 2)

The setpoints associated with the relays are grouped so that they can be rotated.

Setpoint one does not relate directly to relay one. The pumping algorithm manages the mapping of setpoints to relays.

When pumps are run, they RUN in parallel.

Relay Table

Cycle 1		Relays 1	2	3
Setpoints	On 3	On	On	On
	On 2	On	On	Off
	On 1	On	Off	Off
	Off 0	Off	Off	Off
Cycle 2		**Relays 1**	**2**	**3**
Setpoints	On 3	On	On	On
	On 2	Off	On	On
	On 1	Off	On	Off
	Off 0	Off	Off	Off
Cycle 3		**Relays 1**	**2**	**3**
Setpoints	On 3	On	On	On
	On 2	On	Off	On
	On 1	Off	Off	On
	Off 0	Off	Off	Off

Alternate Duty Backup (P111 = 53) [MR 200]

Alternates the lead pump each time the material level cycles.

Please note that this feature applies to the MultiRanger 200 only.

Relay Operation (for P118 = 2)

The setpoints associated with the relays are grouped so that they can be rotated. Setpoint one does not relate directly to relay one. The pumping algorithm manages the mapping of setpoints to relays. When pumps are run, they can RUN only one at a time.

Relay Table

Cycle 1		Relays		
		1	2	3
Setpoints	On 3	Off	Off	On
	On 2	Off	On	Off
	On 1	On	Off	Off
	Off 0	Off	Off	Off

Cycle 2		Relays		
		1	2	3
Setpoints	On 3	On	Off	Off
	On 2	Off	Off	On
	On 1	Off	On	Off
	Off 0	Off	Off	Off

Cycle 3		Relays		
		1	2	3
Setpoints	On 3	Off	On	Off
	On 2	On	Off	Off
	On 1	Off	Off	On
	Off 0	Off	Off	Off

Service Ratio Duty Assist (P111 = 54) [MR 200]

Selects the lead pump based on number of hours each pump has run and the specified ratios that each pump requires. Multiple pumps can run at one time.

Please note that this feature applies to the MultiRanger 200 only.

Relay Operation (for P118 = 2) [MR 200]

Please note that this feature applies to the MultiRanger 200 only.

The setpoints associated with the relays are grouped so they can be redistributed based on pump RUN time ratios. The next pump to start or stop is the one with the required time to actual time ratio.

Over time the number of hours demanded of each pump will conform to the ratios specified. Usually, the ratios are specified in percent values.

To create a grouping of pumps where two pumps make up 50% of the run time and the third pump makes up the other 50%.

P122 is set to these values:

P122 Index	Value
1	25
2	25
3	50

Service Ratio Duty Backup (P111 = 55) [MR 200]

Selects the lead pump based on number of hours each pump has RUN and the specified ratios that each pump requires. Only one pump can RUN at a time.

Please note that this feature applies to the MultiRanger 200 only.

This algorithm is the same as Service Ratio Duty Assist except that it will only RUN one pump at a time. When the next pump in the sequence starts, the previous pump stops.

First In First Out (FIFO) (P111 = 56) [MR 200]

*Selects the lead pump based on the **Alternate** duty but uses staggered off setpoints and shuts down pumps based on the **first in, first out** rule.*

Please note that this feature applies to the MultiRanger 200 only.

This algorithm starts pumps in the same way as Alternate Duty Assist but uses staggered OFF setpoints to shut the pumps down. When the first OFF setpoint is reached the FIFO rule shuts down the first pump started. If the pumps started in sequence 2,3,1 then they would be shut down in sequence 2,3,1.

Pump by Rate (P121) [MR 200]

Starts pumps until the level is changing at the rate specified in P702 or P703.

Please note that this feature applies to the MultiRanger 200 only.

Pumping costs can be less because only the highest ON setpoint needs to be programmed and this results in a lower difference in head to the next wet well which, in turn, results in less energy being used to pump out the well.

Other Pump Controls [MR 200]

Please note that these features apply to the MultiRanger 200 only.

There are a number of other controls available to modify pump behaviour.

Pump Run-On (P130, P131)

Extends the RUN period for a pump based on a set time interval. This allows for the wet well to be pumped lower than usual and reduces sludge build-up on the well bottom.

Wall Cling Reduction (P136)

Varies the ON and OFF setpoints to keep a fat ring from forming around the walls of the wet well.

Pump Group (P137)

Allows for two different Alternate Duty Assist or Alternate Duty Backup pump groups in the same application.

Flush Device (P170 to P173)

Operates a flush valve or special flush device based on the number of pump starts, usually to aerate wet well wastewater.

Appendix E: Updating Software

Updating Software

To update the software in the MultiRanger, please contact your Siemens Milltronics representative to obtain the software. For a complete list of representatives, go to www.siemens.com/processautomation.

WARNINGS:
1. All parameter values will be lost during software upgrade. Record your current parameters manually or using Dolphin Plus or SIMATIC PDM before upgrade.
2. Disable all pumps and alarms before updating software, as relays can change state during the software update causing pumps to turn on or off .

To install the software, please complete the following:

1. Connect your PC or laptop to the MultiRanger RJ-11 RS-232 port.
2. Run the .exe Downloader program in the software. Use this to set the RS-232 settings to match your MultiRanger. Please note that the software default settings will already match the default settings of the unit. Changes are only necessary if the RS-232 settings in the unit have been changed.
3. Complete the Downloader program steps.
4. Verify that Downloader confirms a succesful upgrade before exiting.
5. Complete a Master Reset (P999) after a successful upgrade, before re-entering parameters.

Appendix F: Upgrading

The following procedure will assist you if you are upgrading from a MultiRanger Plus to a MultiRanger 100 or MultiRanger 200.

If the application is unchanged, copy down the parameters in the MultiRanger Plus before de-commissioning the unit.

Mounting a MultiRanger 100/200

Please read the MultiRanger *Installation* section on page 8 before mounting the new MultiRanger 100/200.

Make sure the power is OFF to the unit before following these steps:

1. Remove the old MultiRanger Plus.
2. Mount the new MultiRanger 100/200 using the same mounting holes.

Connecting the Transducer

Important: Unlike the MultiRanger Plus, coaxial cable is not recommended for use with the MultiRanger 100/200 for transducer cable extensions. The MultiRanger 100/200 circuit is designed to use shielded twisted pair cable. Ideally, the coaxial cable should be replaced with twisted pair.

If this is not practical, please refer to the Coaxial Transducer Extension section below.

Coaxial Transducer Extention

The MultiRanger 100/200 uses a new differential input receiver that works either directly connected to the transducer lead or with a screened twisted pair extension cable via a field junction box. This arrangement, using two conductors and a screen, gives considerably better electrical noise immunity than the previous coaxial arrangement (up to 20dB) and will give reliable operation in applications where the proximity of power cables, variable speed drives etc. would have caused problems.

If you are installing a new MultiRanger system we strongly recommend that you use a good quality screened, twisted pair cable if an extension is required. If the integral transducer cable is used you need only connect to the MultiRanger and benefit from the superior performance.

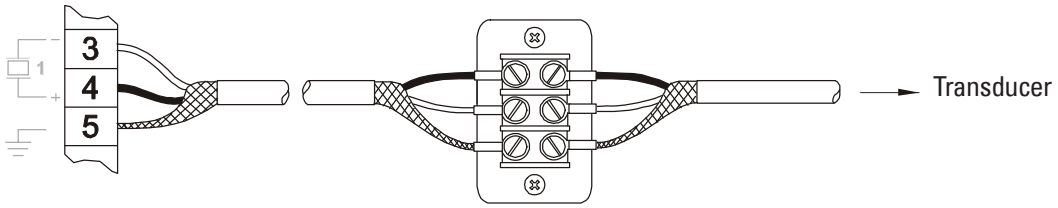

Connecting a transducer with RG62 coaxial extension cable

If you are replacing an older Siemens Milltronics Ultrasonic Level Controller with a new MultiRanger where an RG62 coaxial extension is fitted and you are unable to replace the extension with a new cable, please refer to connection diagram below. Please note that the noise immunity performance will be similar to our older model ultrasonic level controllers if you use coaxial cable.

Existing installation

RG62 coaxial cable has been used to make the extension. The level controller might be a MultiRanger Plus, HydroRanger, HydroRanger Plus or one of our other level controllers.

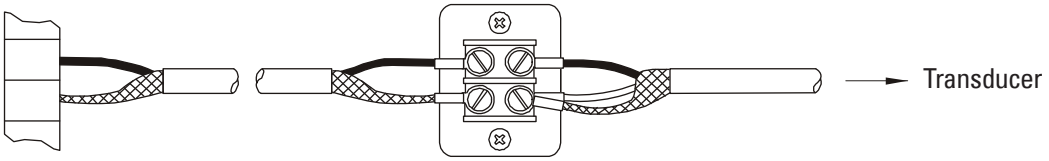

MultiRanger 100/200 Installation (for retrofitting MultiRanger Plus Installations)

Connect with a 0.1µF (100v or greater) capacitor (included with MultiRanger) between the shield and negative terminals. Connect centre core of the coaxial to the positive terminal and the screen to the negative terminal.

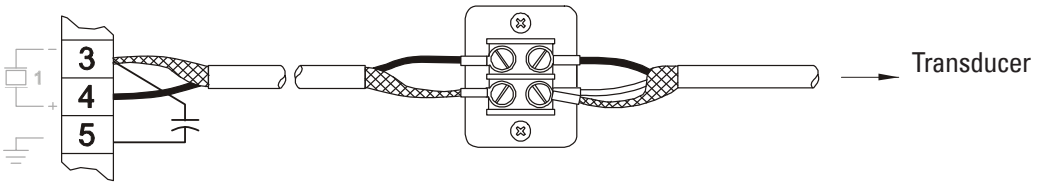

MultiRanger Plus to MultiRanger 100/200 Parameters

The MultiRanger 100/200 uses the current Siemens Milltronics standard parameter set which is different than the parameter numbers used in the MultiRanger Plus.

The MultiRanger Plus parameters numbers are sequential (P-0 to P-99). The MultiRanger 100/200 parameters number are also sequential; however, some of the parameters are indexed.

Parameters are indexed when they apply to more than one input or output. The index value defines the input/output for that parameter. Indexed parameters contain a value for each index, even if that index is not used.

Example

In the MultiRanger Plus each relay had a dedicated parameter number for its function, ON and OFF points.

MultiRanger Plus Relay One

- P-8: Function
- P-9 : ON setpoint
- P-10: OFF setpoint

MultiRanger 100/200 uses P111 for all relays and indexes these parameters.

- P-111: Function
- P-112: ON
- P-113: OFF

The following tables show the differences between the MultiRanger Plus and the MultiRanger 100/200. They each show one relay programmed as a high alarm, and two relays programmed for pump control with alternating pump starts:

MultiRanger Plus

Relay	Parameter	Value
1	P-8 (relay function)	1 (alarm)
1	P-9 (ON setpoint)	4 m
1	P10 (OFF setpoint)	3.5 m
2	P-11 (relay function)	9
2	P-12 (ON setpoint)	3.2 m
2	P-13 (OFF setpoint)	0.5 m
3	P-14 (relay function)	9
3	P-15 (ON setpoint)	3.4 m
3	P-16 (OFF setpoint)	0.6 m

MultiRanger 100/200

Relay	Parameter	Value
1	P111 [1] (relay function)	1
1	P112 [1] (ON setpoint)	4 m
1	P113[1] (OFF setpoint)	3.5 m
2	P111[2] (relay function)	52
2	P112[2] (ON setpoint)	3.2 m
2	P113[2] (OFF setpoint)	0.5 m
3	P111[3] (relay function)	52
3	P112[3] (ON setpoint)	3.4 m
3	P113[3] (OFF setpoint)	0.6 m

Appendix G: Conduit Entry for Class 1, Div 2 Applications

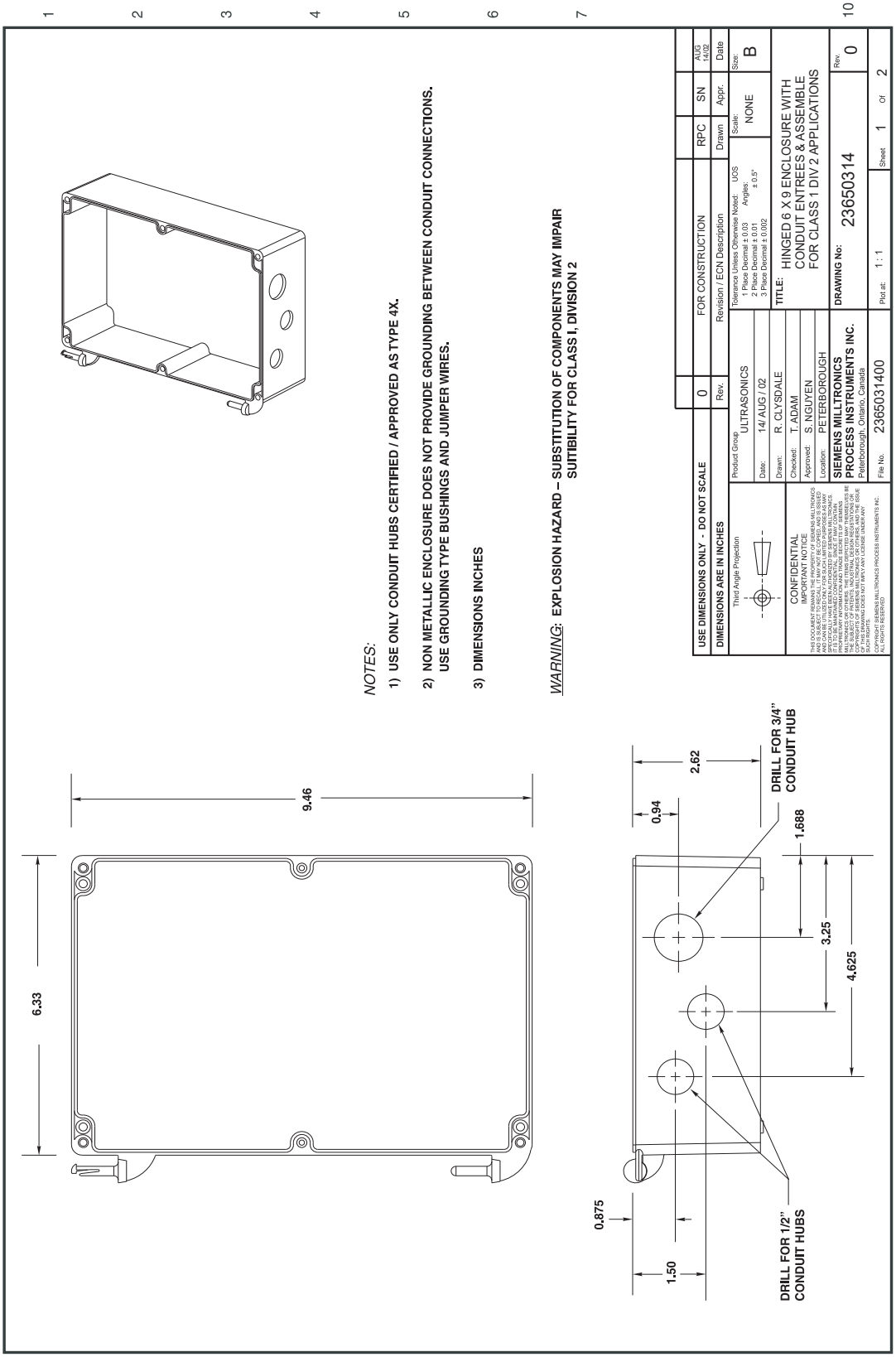

Appendix G

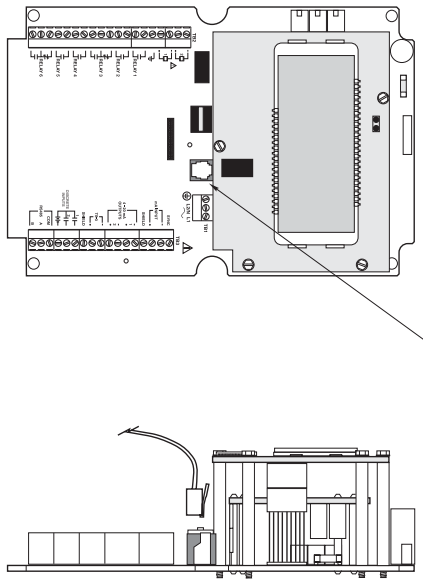

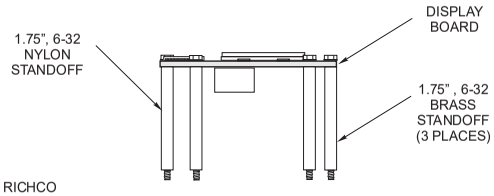

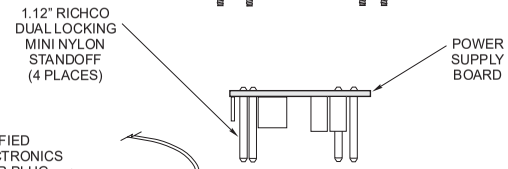

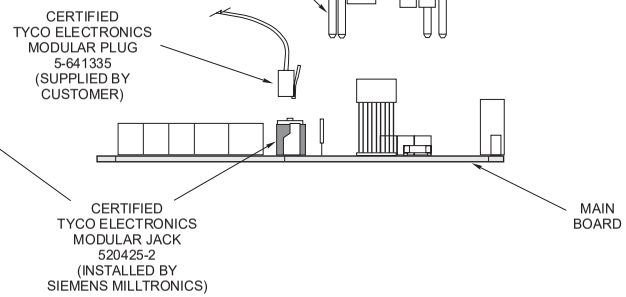

USE DIMENSIONS ONLY - DO NOT SCALE	0	FOR CONSTRUCTION	RPC	SN	AUG 14/02
DIMENSIONS ARE IN INCHES	Rev.	Revision / ECN Description	Drawn	Appr.	Date

Third Angle Projection

Product Group: ULTRASONICS
Date: 14/ AUG / 02
Drawn: R. CLYSDALE
Checked: T. ADAM
Approved: S. NGUYEN
Location: PETERBOROUGH

Tolerance Unless Otherwise Noted: UOS
1 Place Decimal ± 0.03 Angles:
2 Place Decimal ± 0.01 ± 0.5°
3 Place Decimal ± 0.002

Scale: NONE
Size: B

TITLE: HINGED 6 X 9 ENCLOSURE WITH CONDUIT ENTREES & ASSEMBLE FOR CLASS 1 DIV 2 APPLICATIONS

SIEMENS MILLTRONICS PROCESS INSTRUMENTS INC.
Peterborough, Ontario, Canada

DRAWING No: 23650314
Rev. 0

File No. 2365031400
Plot at: 1 : 1
Sheet 2 Of 2

CONFIDENTIAL
IMPORTANT NOTICE
THIS DOCUMENT REMAINS THE PROPERTY OF SIEMENS MILLTRONICS AND IS SUBJECT TO RECALL. IT MAY NOT BE COPIED, AND IS ISSUED AND CAN BE UTILIZED ONLY FOR SUCH LIMITED PURPOSES AS MAY SPECIFICALLY HAVE BEEN AUTHORIZED BY SIEMENS MILLTRONICS. IT IS TO BE MAINTAINED CONFIDENTIAL, SINCE IT MAY CONTAIN PROPRIETARY INFORMATION AND TRADE SECRETS OF SIEMENS MILLTRONICS OR OTHERS. THE ITEMS DEPICTED MAY THEMSELVES BE SUBJECT OF PATENTS, INDUSTRIAL DESIGN REGISTRATIONS OR COPYRIGHTS OF SIEMENS MILLTRONICS OR OTHERS, AND THE ISSUE OF THIS DRAWING DOES NOT IMPLY ANY LICENSE UNDER ANY SUCH RIGHTS
COPYRIGHT SIEMENS MILLTRONICS PROCESS INSTRUMENTS INC. ALL RIGHTS RESERVED

Appendix H: Hazardous Area Installations

Panel mount:

Instructions specific to hazardous area installations (Reference European ATEX Directive 94/9/EC, Annex II, 1/0/6)

The following instructions apply to equipment covered by certificate number SIRA06ATEXT9163X:

1. For use and assembly, refer to the main instructions.
2. The equipment is certified for use as Category 3D equipment.
3. The equipment may be used in hazardous zone 22 except for conductive dusts (e.g., metal or carbon dusts).
4. This equipment has a maximum surface temperature of T75 C (in a 50°C ambient). Refer to the applicable Code Of Practice for selection of this equipment with respect to specific dust ignition temperatures.
5. The equipment is certified for use in an ambient temperature range of -20 C to 50 C.
6. Any cable or conduit entries must meet the requirements of European Directive 94/9/EC for Group II, Category 3D and maintain the overall IP rating of the enclosure.
7. Cable should be selected in accordance with the applicable Code of Practice and such that its insulation can withstand the maximum surface temperature of the enclosure (T75°C).
8. The equipment has not been assessed as a safety related device (as referred to by Directive 94/9/EC Annex II, clause 1.5).
9. Installation and inspection of this equipment shall be carried out by suitably trained personnel in accordance with the applicable code of practice (EN 60079-14 and EN 60079-17 in Europe).
10. Repair of this equipment shall be carried out by suitably trained personnel in accordance with the applicable code of practice (e.g. EN 60079-19 within Europe).
11. Components to be incorporated into or used as replacements in the equipment shall be fitted by suitably trained personnel in accordance with the manufacturer's documentation.
12. Manual override can be accomplished by using the disconnect switch provided in the building installation.

Wall mount:

Instructions specific to hazardous area installations (Reference European ATEX Directive 94/9/EC, Annex II, 1/0/6)

The following instructions apply to equipment covered by certificate number SIRA06ATEXT9163X:

1. For use and assembly, refer to the main instructions.
2. The equipment is certified for use as Category 3D equipment.
3. The equipment may be used in hazardous zone 22.
4. This equipment has a maximum surface temperature of T75 C (in a 50°C ambient). Refer to the applicable Code Of Practice for selection of this equipment with respect to specific dust ignition temperatures.
5. The equipment is certified for use in an ambient temperature range of -20 C to 50 C.
6. Any cable or conduit entries must meet the requirements of European Directive 94/9/EC for Group II, Category 3D and maintain the overall IP rating of the enclosure.
7. Cable should be selected in accordance with the applicable Code of Practice and such that its insulation can withstand the maximum surface temperature of the enclosure (T75°C).
8. The equipment has not been assessed as a safety related device (as referred to by Directive 94/9/EC Annex II, clause 1.5).
9. Installation and inspection of this equipment shall be carried out by suitably trained personnel in accordance with the applicable code of practice (EN 60079-14 and EN 60079-17 in Europe).
10. Repair of this equipment shall be carried out by suitably trained personnel in accordance with the applicable code of practice (e.g. EN 60079-19 within Europe).
11. Components to be incorporated into or used as replacements in the equipment shall be fitted by suitably trained personnel in accordance with the manufacturer's documentation.
12. Manual override can be accomplished by using the disconnect switch provided in the building installation

Appendix J: Software Revision History

MultiRanger 100

Soft-ware Rev.	Date	Changes
1.00	Aug. 15, 2005	• Pilot Release.
1.01	Sept. 21, 2005	• Internal Release.
1.02	Dec. 12, 2001	• Initial Release.
1.03	Aug. 27, 2002	• Clarified return message for factory RS232 test. • Prevent entering of strings with invalid fields in Dolphin Plus. • Properly convert ft/sec to m/sec in P654. • Eliminated rogue watchdog resets from repeatedly pressing hand programmer enter while in P901-P90. • Allow 32 bit read/write as seconds. • Factory mode lock is written to flash. • Cleaned up compiler errors and Lint warnings. • Modified handling of non-quick start parameters. • Modifications for Production Testing. • Users may now configure the SmartLinx memory map.

Software Rev.	Date	Changes
1.04 1.05	Feb. 11, 2003 Feb. 23, 2003	• Product enhancements to eliminate relay chatter on software download. • Improved functionality of receiver saturation during calibration. • Added relay functionality through P118 to coincide with manual. • Improved product security with addition of P069. • Backup level override behaviour improvement. • Improved mA control with P210 - P213. • Improved temperature calibration in factory mode. • Improved Production Testing support. • Improved reset behaviour. • Changed default mA trim values. • Improved functionality of downloading breakpoints in Dolphin Plus.
1.06	May 27, 2004	• RCVR offset limits are no longer handled in the code.
1.07	Aug. 30, 2004	• P060, P005 Dependancy removed. • Split Values - Parameters with the "xx:yy" format now being limited properly. • Temperature Spike - Temperature readings now being protected from other units' transmit pulse. • TVT Shift - A rounding error in the number of samples, caused the TVT position to shift. • Auto False Echo Suppression - Device learns the shape of an empty tank to automatically suppress false echos. • SIMATIC PDM Compatability - Device uses Modbus to communicate with SIMATIC PDM. DDs required.

Soft-ware Rev.	Date	Changes
1.08	Nov. 11, 2004	• Improvements made as a result of Siemens systems testing: • SIMATIC PDM related: TVT display improvement to prevent it from going negative. MLFB number includes SMPI as well as Siemens numbering. Change of some enumerations in the Device Description. • Device related: mA output no longer resets when PAR_MA_FUNCTION (P201) is written to. mA trims (P214, P215) now have the property no Reset. • Enhancement: Device Identification command allows Tag, Description, Message, and Date.
1.09	Nov. 28, 2005	• Correction for manual Shaper TVT shift due to change in velocity. • Resolved issue of reading some floats as decimal shifted integers. • The submergence algorithm now implemented with the thresholds defined. • Changes to support single DUART.
1.10	not released	
1.11	Apr. 20, 2006	• Software modified to support replacement component. • Supports SIMATIC PDM version 6.02. • Added support for true First echo processing algorithm • Support for 3rd Point Volume has been added on P001 = DPA or DPD.
1.12	Aug. 15, 2008	• Many parameter ranges improved to match product function and SIMATIC PDM. • P110 = OFF removed from SIMATIC PDM • Improved text labels for P770

MultiRanger 200

Soft-ware Rev.	Date	Changes
1.00	Nov. 09, 2001	• Pilot Release.
1.01	Dec. 02, 2001	• Initial Release.
1.02	Aug. 20, 2002	• P602 functions reduced point limit from 10 to 6. • Changed P132 to global. • P640 now accepts negative values. • Changed access mode of dialer parameters so they cannot be scrolled. • Clarified return message for factory RS232 test. • Prevent entering strings with invalid fields in Dolphin Plus. • Properly convert ft/sec to m/sec in P654. • Eliminated rogue watchdog resets when repeatedly pressing hand programmer enter while in P901-P903. • Allow 32 bit read/write as seconds. • Factory mode lock is written to flash. • Cleaned up compiler errors and Lint warnings. • Modified handling of non-quick start parameters. • Modifications for Production Testing. • Users may now configure the SmartLinx memory map. • Improved Preset Application values.
1.03	Sept. 25, 2002	• Allow files to be downloaded to the product using Dolphin+.

Soft-ware Rev.	Date	Changes
1.04 1.05	Feb. 11, 2003 Feb. 21, 2003	• Product enhancements to eliminate relay chatter on software download. • Improved functionality of receiver saturation during calibration. • Added relay functionality thru P118 to coincide with manual. • Improved product security with addition of P069. • Backup level override behaviour improvement. • Improved mA control with P210 - P213. • Improved temperature calibration in factory mode. • Improved Production Testing support. • Improved reset behaviour. • Changed default mA trim values. • Improved functionality of downloading downloading in Dolphin +.
1.06	May 27, 2004	• RCVR offset limits are no longer handled in the code.
1.07	Aug. 30, 2004	• OCM Time Units improvement. • Totalizer enhancement to prevent a rounding error puting the totalizer into an unstable "mode." • Totalizer - Access to totalizer in OCM mode from Modbus map (reg 41040). • P060, P005 Dependancy removed. • Split Values - Parameters with the "xx:yy" format now being limited properly. • Temperature Spike - Temperature readings now being protected from other units' transmit pulse. • TVT Shift - A rounding error in the number of samples caused the TVT to shift position. • Auto False Echo Suppression - Device learns the shape of an empty tank to automatically suppress false echos. • SIMATIC PDM Compatability - Device uses Modbus to communicate with SIMATIC PDM. DDs required.

Soft-ware Rev.	Date	Changes
1.08	Aug. 30, 2004	• Improvements made as a result of Siemens systems testing: • SIMATIC PDM related: TVT display improvement to prevent it from going negative. MLFB number includes SMPI as well as Siemens numbering. Change of some enumerations in the Device Description. • Device related: mA output no longer resets when PAR_MA_FUNCTION (P201) is written to. mA trims (P214, P215) now have the property noReset. • Enhancement: Device Identification command allows Tag, Description, Message, and Date.
1.09	Nov. 28, 2005	• Correction for manual Shaper TVT shift due to change in velocity. • Reading some floats as decimal shifted integers would return a value off by 1 in some cases. • The submergence algorithm now implemented with the thresholds defined. • Changes to support single DUART.
1.10	not released	
1.11	Apr. 20, 2006	• Software modified to support replacement component. • Supports SIMATIC PDM version 6.02. • Added support for true First echo processing algorithm • Support for 3rd Point Volume has been added on P001 = DPA or DPD.
1.12	Aug. 01, 2006	• Internal Release.
1.13	Aug. 15, 2008	• Many parameter ranges improved to match product function and SIMATIC PDM. • P110 = OFF removed from SIMATIC PDM • Improved volume calculation for 3rd point volume • Improved text labels for P770

Programming Charts

#	Parameter Name	Altered Values for Indices/Point Numbers 1	2	3
Security				
P000	Lock (G)			
Quickstart				
P001	Operation			
P002	Material			
P003	Max. Process Speed			
P004	Transducer			
P005	Units (G)			
P006	Empty			
P007	Span			
Volume				
P050	Tank Shape			
P051	Max Volume			
P052	Tank Dimension A			
P053	Tank Dimension L			
P054	Level Breakpoints		record values on a separate sheet.	
P055	Volume Breakpoints		record values on a separate sheet.	
Reading Value				
P060	Decimal Position			
P061	Convert Reading			
P062	Offset Reading			
P064	Reading Override Enable			
P065	Reading Override Value			
P066	Override Time Delay			
P069	Password			
Failsafe				
P070	Failsafe Timer			
P071	Failsafe Material Level			
P072	Failsafe Level Advance			
Relays				
P100	Preset Applications [MR200]			
P110	Level Source			
P111	Relay Control Function			
P112	Relay ON Setpoint			

#	Parameter Name	Altered Values for Indices/Point Numbers 1	2	3
P113	Relay OFF Setpoint			
P115	Relay Interval Setpoint [MR 200]			
P116	Deadband			
P118	Relay Output Logic			
P119	Relay Logic Test			
Pump Setpoint Modifiers				
P121	Pump by Rate [MR 200]			
P122	Pump Service Ratio [MR 200]			
Independent Relay Failsafe				
P129	Relay Failsafe			
Advanced Pump Control Modifiers				
P130	Pump Run-On Interval [MR 200]			
P131	Pump Run-On Duration [MR 200]			
P132	Pump Start Delay [MR 200]			
P133	Pump Power Resumption Delay [MR 200]			
P136	Wall Cling Reduction [MR 200]			
P137	Pump Group [MR 200]			
Flush Systems				
P170	Flush Pump [MR 200]			
P171	Flush Cycles [MR 200]			
P172	Flush Interval [MR 200]			
P173	Flush Duration [MR 200]			
mA Output				
P200	mA Output Range			
P201	mA Output Function			
P202	mA Output Allocation			
P203	mA Output Value / Transducer			
Independent mA Setpoints				
P210	0/4 mA Output Setpoint			
P211	20 mA Output Setpoint			
mA Output Limits				
P212	mA Output Min Limit			
P213	mA Output Max limit			
mA Output Trim				
P214	4 mA Output Trim			
P215	20 mA Output Trim			

#	Parameter Name	Altered Values for Indices/Point Numbers 1	2	3
P219	mA Output Failsafe[MR 200]			
mA Input				
P250	mA Input Range [MR 200]			
P251	0 to 4 mA Input Level [MR 200]			
P252	20 mA Input Level [MR 200]			
P253	Input Filter Time Constant [MR 200]			
P254	Scaled mA Input Value[MR 200]			
P260	mA Raw Input [MR 200]			
Discrete Input Functions				
P270	Discrete Input Function			
P275	Scaled Discrete Input Value			
Record Temperatures				
P300	Temp, Transducer max			
P301	Temp, Transducer min			
P302	Temperature, Sensor max			
P303	Temperature, Sensor min			
Record Readings				
P304	Reading Max			
P305	Reading Min			
Pump Records				
P309	Pump RUN Time			
P310	Pump Hours			
P311	Pump Starts			
P312	Pump Run Ons [MR 200]			
Flow Records				
P320	Flow Max [MR 200]			
P321	Flow Min [MR 200]			
LCD Totalizer				
P322	LCD Total Low [MR 200]			
P323	LCD Total High [MR 200]			
Profile Records				
P330	Profile Record			
P331	Auto Record Enable			
P332	Auto Record Transducer			
P333	Auto Record Interval			
Auto Record ON and OFF Setpoints				

#	Parameter Name	Altered Values for Indices/Point Numbers 1	2	3
P334	Auto Record ON Setpoint			
P335	Auto Record OFF Setpoint			
P336	Auto Record Filling/Emptying			
P337	Auto Record LOE Time			
Installation Records				
P340	Date of Manufacture			
P341	RUN Time			
P342	Start Ups			
Open Channel Monitoring				
P600	Primary Measuring Device [MR 200]			
P601	Flow Exponent [MR 200]			
P602	Primary Measuring Device Dimensions [MR200]			
P603	Maximum Head [MR 200]			
P604	Maximum Flow [MR 200]			
P605	Zero Head [MR 200]			
P606	Time Units [MR 200]			
P607	Flowrate Decimal [MR 200]			
P608	Flowrate Units [MR 200]			
P610	Head Breakpoints [MR 200]			
P611	Breakpoint Flowrates [MR 200]			
P620	Low Flow Cutoff [MR 200]			
P621	Auto Zero Head [MR 200]			
Pumped Volume Totalizer				
P622	Inflow / Discharge Adjust [MR 200]			
Totalizer				
P630	LCD Totalized Multiplier [MR 200]			
P633	LCD Totalized Decimal Postion [MR 200]			
P640	Remote Totalized Multiplier [MR 200]			
P641	Flow Sampler Mantissa [MR 200]			
P642	Flow Sampler Exponent [MR 200]			
P645	Relay Duration [MR 200]			

#	Parameter Name	Altered Values for Indices/Point Numbers 1	2	3
Range Calibration				
P650	Offset Calibration			
P651	Sound Velocity Calibration			
P652	Offset Correction			
P653	Velocity			
P654	Velocity @ 20° C			
Temperature Compensation				
P660	Temp Source			
P661	Temp Fixed			
P663	Temp Transducer Allocation			
P664	Temperature			
Rate				
P700	Max Fill Rate			
P701	Max Empty Rate			
P702	Filling Indicator			
P703	Emptying Indicator			
P704	Rate Filter			
P705	Rate Update Time			
P706	Rate Update Distance			
P707	Rate Value			
P708	Volume Rate Display [MR 200]			
Measurement Verification				
P710	Fuzz Filter			
P711	Echo Lock			
P712	Echo Lock Sampling			
P713	Echo Lock Window			
Transducer Scanning				
P726	Level System Sync			
P727	Scan Delay			
P728	Shot Delay			
P729	Scan Time			
Display				
P730	Auxiliary Reading			
P731	Auxiliary Reading Key			
P732	Display Delay			
P733	Scroll Access			
P735	Backlight			

#	Parameter Name	Altered Values for Indices/Point Numbers 1	2	3
P737	Primary Reading [MR 200]			
P741	Communications Timeout			
SmartLinx Reserved				
Communications				
P770	Port Protocol			
P771	Network Address			
P772	Baud Rate			
P773	Parity			
P774	Data Bits			
P775	Stop Bits			
P778	Modem Available			
P779	Modem Inactivity Timeout			
P782	Parameter Index Location			
SmartLinx Hardware Testing				
P790	Hardware Error			
P791	Hardware Error Code			
P792	Hardware Error Count			
P794	SmartLinx Module Type			
P795	SmartLinx Protocol			
P799	Communications Control			
Echo Processing				
P800	Near Blanking			
P801	Range Extension			
P802	Transducer with Submergence Shield			
P803	Shot / Pulse Mode			
P804	Confidence Threshold			
P805	Echo Confidence			
P806	Echo Strength			
P807	Noise			
Advanced Echo Processing				
P815	Echo Time Filtered			
P816	Echo Time Raw			
P820	Algorithm			
P821	Spike Filter			
P822	Narrow Echo Filter			
P823	Reform Echo			

#	Parameter Name	Altered Values for Indices/Point Numbers 1	2	3
P824	(reserved)			
P825	Echo Marker Trigger			
Advanced TVT Adjustment				
P830	TVT Type			
P831	TVT Shaper			
P832	TVT Shaper Adjust			
P833	TVT Start Min			
P834	TVT Start Duration			
P835	TVT Slope Min			
P837	Auto-False Echo Suppression			
P838	Auto-False Echo Suppression-Distance			
P839	TVT Hover Level			
Advanced Shot Adjustment				
P840	Short Shot Number			
P841	Long Shot Number			
P842	Short Shot Frequency			
P843	Long Shot Frequency			
P844	Short Shot Width			
P845	Long Shot Width			
P850	Short Shot Bias			
P851	Short Shot Floor			
P852	Short Shot Range			
P900	Software Revision Number			
P901	Memory			
P902	Watchdog			
P903	Display			
P904	Keypad			
P905	Transmit Pulse			
P906	RS-232 Port			
P908	Scanner			
P910	Toggle Relays			
P911	mA Output Value			
P912	Transducer Temperature			
P913	Sensor Temperature			
P914	mA Input [MR 200]			
Measurement				

#	Parameter Name	Altered Values for Indices/Point Numbers 1	2	3
P920	Reading Measurement			
P921	Material Measurement			
P922	Space Measurement			
P923	Distance Measurement			
P924	Volume Measurement [MR 200]			
P925	Flow Measurement [MR 200]			
P926	Head Measurement [MR 200]			
P927	Distance Measurement			
P999	Master Reset			

Index

A

accuracy 4
adding new functions 245
alarm 54
    bounded 56
    cable fault 56
    common parameters 54
    emptying rate 55
    filling rate 55
    level 54
    loss of echo 57
    rate 55
    temperature 56
alternate duty assist 241
alternate duty backup 59, 60, 61, 241
alternate duty service 62
application
    test 87
applications
    preset 46
    testing 85
approvals 6
auxiliary reading 25

B

backup level override 47
battery 13
bit values 107
blanking
    troubleshooting 236
    with Span 123
board 13

C

cable 16
    routing 9
cabling guidelines 92
calibration
    mA output 49
characterization chart 52
communication ports
    configuring 94
communications 89
communications installation 92
configuration 2
control
    rake 69
controlling the display 25

D

data types 107
    bit values 107
default auxiliary reading 26
dimensions 9, 40
discrete inputs 48, 100
    indexing 36
    logic 48
    wiring 48
display 4
    auxiliary 25
    controlling 25
    distance 23
    echo confidence 23
    failsafe time left 23
    head (OCM) 23
    multiple readings 26
    pump hours 23
    rate of change 23
    temperature 23
display readout 34
distance calculation 226
Dolphin Plus 29, 35, 89
    changing parameters 35
    communication settings 91
    updating software 245

E

echo confidence, run mode 23
echo processing 224
enabling new functions 245
enclosure 6
error codes 34, 116
error handling 111
exponential flow 79
external totalizers 71

F

failsafe 40
    by relay 45
fat ring 66
first in first out (FIFO) 62, 243
fixed duty assist 61
flash update 245
flow calculation 228
flow sampler 72
flume
    cut throat 82
    H flume 78

Leopold Lagco 81
Palmer Bowlus 77
Parshall 80, 84
rectangular 76
universal trapezoidal 84
flush valve 67
format words 105
Frequency Input 153

G

global index method 103
group pumps 67

H

H flume 165
hand programmer 27
head measurement 23
head vs. flowrate breakpoints 172

I

in bounds 56
independent failsafe 65
index method
global 103
parameter specific 103
index types 118, 223
indexed parameters 37
indexing
parameters 36
points 36
input / output 99
inputs 6
installation 8

L

LCD controlling 25
level alarms 54
LOE 57
loss of echo (LOE) 40
alarm 57

M

mA
calibrating 49
input 49
loops 49
output 49, 50
map ID 98
maximum process speed 230
maximum separation 92
measurement
difficulties 234
dual point 39
set up 38
setting up 38
single point 38
starting 38
Modbus 90
register map 97
responses 111
mode
program 27
run 22
mounting
instructions 9
location 8
wall mount 9
multiple readings 26

N

near blanking
troubleshooting 236
with span 123
noise problems 232
noise sources 233

O

OCM (open channel monitoring) 73
common parameters 73
cut throat 82
flow characterization chart 83
flow exponent support 79
H flume 78
Leopold Lagco flume 81
Palmer Bowlus flume 77
Parshall flume 80
rectangular flume 76
testing flow values 86
totalized volume 75
universal calculation 83
universal Parshall flume 84
universal trapezoidal flume 84
V notch weir 75
weirs 79
zero head 74
operation
dual point 39
single point 38
options, adding 245
out of bounds 56
outputs 5

P

parameter
relays 43
parameter access
data types 107
format words 105

overview 102
reading 103
writing 104
parameter indexing 36, 102
parameters
advanced echo processing 203
advanced shot adjustment 212
advanced TVT adjustment 207
auto record setpoints 162
backup level override 129
calibration 178
communications 194
data logging 154
discrete input functions 153
display 191
display and reading 127
echo processing 199
failsafe 131
flow records 158
flush systems 144
global 33
independent mA setpoints 149
independent relay failsafe 140
installation records 164
LCD totalizer 158
mA input 151
mA output 146
mA output failsafe 151
mA output limits 149
mA output trim 150
master reset 221
measurement 218
measurement verification 187
open channel monitoring (OCM) ... 165
profile records 159
pump control modifiers 141
pump records 156
pump setpoint modifiers 139
pumped volume totalizer 174
quick start 119
rate 183
record readings 156
record temperatures 154
relays 132
scrolling 32
SmartLinx hardware testing 197
SmartLinx reserved 194
special 33
status 24
temperature compensation 181
test 215
totalizer 175
transducer scanning 190
view only 33
volume 123
volume measurement 220
points
indexing 36
ports, communication 90
power 19
preprogrammed applications 46
program mode 27
programming 4
alarms 54
by hand 27
relays 41
pump
alternate duty backup 59, 60
by rate 63
hours 23
off setpoint 59, 60, 61
on setpoints 59, 60, 61
other controls 61
pump down 58
pump up 59
reservoir 59
run-on 66
service ratio 64
start delay 66
start method 239
totalizing volume 65
usage 68
wet well 58
pump by rate 243
pump control 100
algorithms 58, 239
options 239
other 243
reference 239
pump flush valve 67
pump hours 101
pump starts 101

Q

quick start 38

R

rake control 69
randomize setpoints 66
range 4
reading
volume 51
recording profiles 160

register map 97
discrete inputs 100
input/output 99
mA output 100
map ID 98
parameter access 102
parameter format words 105
point data 99
product ID 99
pump control 100
pump hours 101
pump setpoint 100, 101
pump starts 101
pumped volume 101
relay outputs 100
UINT32 Order 98
relay 17
activation 44
failsafe 45
flow sampler 72
function codes 110
indexing 36
modifiers 43
modify logic 45
outputs 100
parameters 43
programming 41
totalizer 71
wiring test 44
resolution 4
response rate 40
RS-232 20
RS-485 20
run mode 22
run-on 66

S

samplers 71
SCADA 89
scrolling parameters 32
scum ring See wall cling 66
security 33
service ratio
applications 64
duty assist 242
duty backup 243
simulation 85
level cycle 85
OCM flow characterization 86
single measurement 85
volume characterization 86
single parameter access 114
single point 38
SmartLinx 91
installation 14
Installation in Wall mount 14
software update 245
sound velocity 226
special parameters 33
specific auxiliary reading 26
specifications 3
standard applications 46
start delay 66
starting measurement 38
status parameters 24
synchronization 19

T

tank shape 51
temperature
alarm 56
compensation 4
error 4
run mode 23
sensor 18
terminal board 16
testing
application 87
configuration 85
text messages 109
totalizer 71
transducers 6, 17
indexing 36
transmit pulse 224
troubleshooting
common problems 231
communication 113
noise problems 232
TS-3 18

U

UINT32 107
units or percent 33
universal
example 52
volume 52
unsigned double precision integer 107
updating software 245

V

verify
mA output 50
volume 51
calculation 227

characterization chart 52
dimensions 40
readings 51
tank shape 51
universal example 52

W

wall cling 66
weight 6
weir
Cipolletti 167
standard 79
V notch 75
wet well 58
wiring 15
communication 92
problems 233
test 44
writing parameters 104
wrong reading 236

Notes

www.siemens.com/processautomation

Siemens Milltronics Process Instruments Inc.
1954 Technology Drive, P.O. Box 4225
Peterborough, ON, Canada K9J 7B1
Tel: (705) 745-2431 Fax: (705) 741-0466
Email: techpubs.smpi@siemens.com

© Siemens Milltronics Process Instruments Inc. 2009
Subject to change without prior notice

7 M L 1 9 9 8 5 F B 0 6
Printed in Canada

Rev. 6.1

NON-MERCURY FLOAT SWITCH - CONTROL DUTY

2900 MECHANICAL SERIES - NARROW ANGLE FLOAT SWITCH

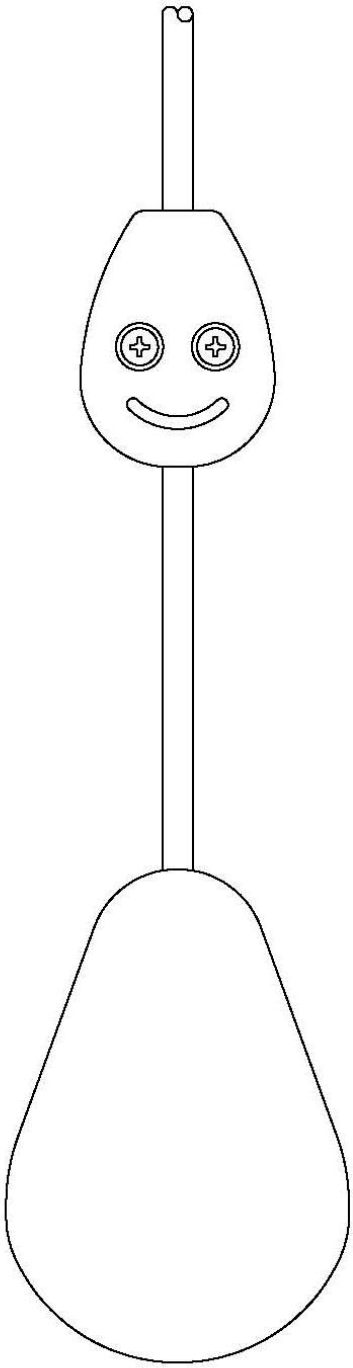

GENERAL

DESIGNED FOR ACCURATE LIQUID LEVEL CONTROL IN MANY APPLICATIONS INCLUDING POTABLE WATER OR SEWAGE ENVIRONMENTS. THE FLOAT SWITCH CAN BE UTILIZED TO SIGNIFY SPECIFIC WATER LEVELS OR FOR DIRECT ALARM ACTUATION.

SWITCH VARIATIONS

NORMALLY OPEN (N/O) - GREEN SHELL

THE CONTACTS ARE OPEN (OR OFF) IN THE HANGING POSITION. AS THE FLOAT RISES 1" (5°) ABOVE HORIZONTAL, THE CONTACTS BECOME CLOSED AND ACTUATE (TURN ON) THE SWITCH. THIS FLOAT IS GENERALLY USED IN PUMP DOWN APPLICATIONS.

NORMALLY CLOSED (N/C) - GREEN/RED SHELL

THE CONTACTS ARE CLOSED (OR ON) IN THE HANGING POSITION. AS THE FLOAT RISES 1" (5°) ABOVE HORIZONTAL, THE CONTACTS BECOME OPEN AND ACTUATE (TURN OFF) THE SWITCH. THIS FLOAT IS GENERALLY USED IN PUMP UP APPLICATIONS.

SINGLE POLE, DOUBLE THROW (SPDT) - GREEN/BLUE SHELL

A VARIATION OF THE PREVIOUSLY LISTED SWITCHES. THIS FLOAT SWITCH CAN BE WIRED TO OPERATE AS EITHER (BUT NOT BOTH) A NORMALLY OPEN OR NORMALLY CLOSED SWITCH BASED ON THE USER'S NEED.

SWITCH SPECIFICATIONS

2900 SERIES MECHANICAL FLOAT SWITCHES ARE DESIGNED TO OPERATE UNDER THE FOLLOWING PARAMETERS.

MINIMUM OPERATING TEMPERATURE	-	32 DEGREES F.
MAXIMUM OPERATING TEMPERATURE	-	170 DEGREES F.
ELECTRICAL RATING	-	10 AMP-120 VAC, 5 AMP-240 VAC
ACTUATION POINT	-	1" ABOVE / BELOW HORIZONTAL.

POWER CORD SPECIFICATIONS

CONDUCTOR CORD - PHYSICAL	-	CHLORINATED POLY ETHYLENE.
ELECTRICAL FOR N/O OR N/C SWITCH	-	18 AWG 2, TYPE SJOOW - 300 V.
ELECTRICAL FOR SPDT SWITCH	-	18 AWG 3, TYPE SJOOW - 300 V.

FLOAT SPECIFICATIONS

DURABLE POLYPROPYLENE MATERIAL CONSTRUCTION.
SOLID POLYURETHANE FOAM INTERIOR.
LEAK PROOF, SHOCK PROOF, AND IMPACT RESISTANT.
RESISTANT TO SEWAGE AND WASTEWATER APPLICATIONS.

CORD WEIGHT

ZINC PLATED CAST IRON - 1.22 LBS.
SPLIT WEIGHT DESIGN ALLOWS FOR EASY ADJUSTMENT.
DESIGN ALLOWS FOR SECURE AND PERMANENT ATTACHMENT TO CORD.

c UL US
LISTED
Ind. Cont. Eq.
47UF

CONERY MFG INC 1380 ENTERPRISE PKWY ASHLAND, OH 44805
info@conerymfg.com PH (419) 289-1444 FAX (419) 281-0366

2900 SERIES B8

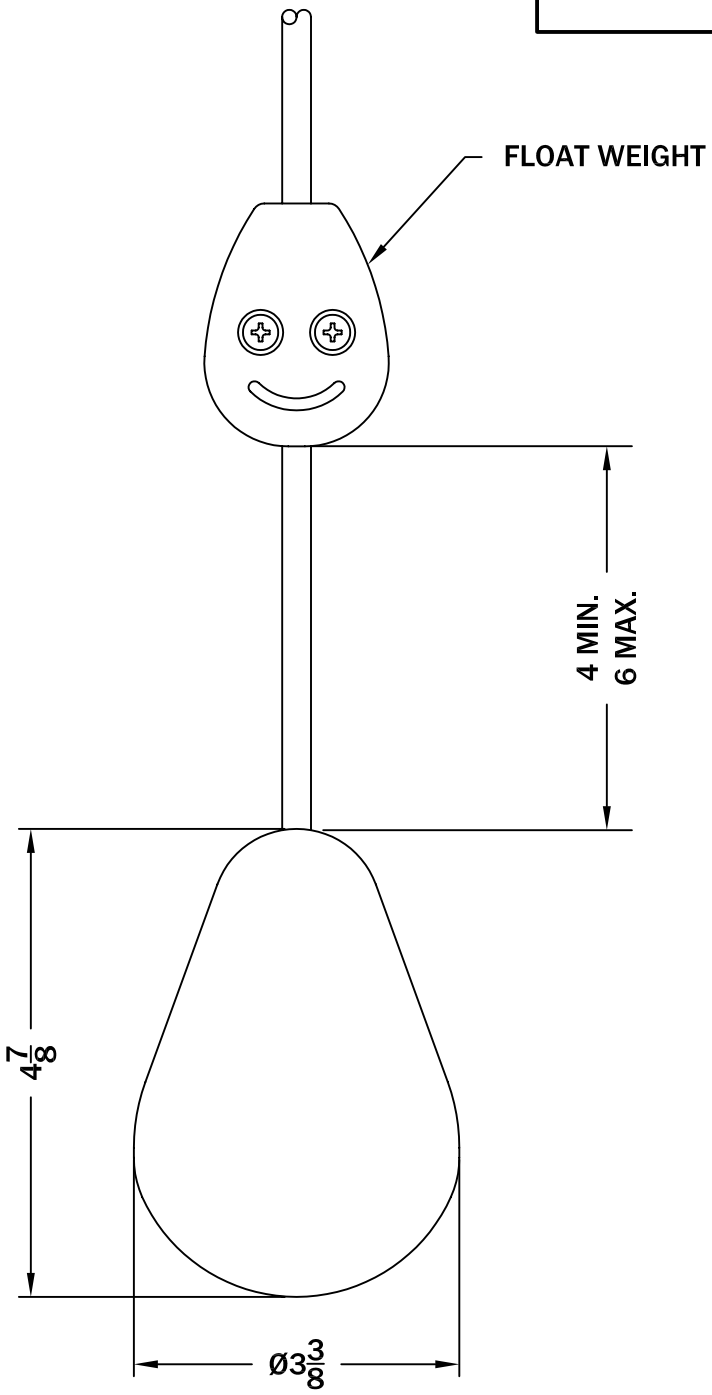

ALL INFORMATION CONTAINED IN THIS DRAWING IS CONFIDENTIAL AND PROPRIETARY TO CONERY MFG, INC.

CONERY MFG INC

CHANGES		TOLERANCES	DRAWN BY	DATE
F		DECIMALS .XXX = ±.005 .XX = ±.010 FRACTIONAL X/X = ±.1/64 ANGLES X° = ±1/2°	D. MIDDLETON	07/30/09
E			MATERIAL SPECIFICATION:	
D				
C				
B				
A				

SPECIFICATION SHEET
MECHANICAL FLOAT

SCALE: HALF

2900 SERIES B8
NON–MERCURY

NOTE: ALL ELECTRICAL DIAGRAMS SHOWN ARE EXAMPLES ONLY, CONSULT WITH LOCAL ELECTRICAL AUTHORITIES AND CODES. DO NOT USE THESE PRODUCTS IN GASOLINE, VOLATILES, OTHER COMBUSTIBLES.

2900 SERIES B8

FOR PUMP DOWN USE
(NORMALLY OPEN FLOATS)

FOR PUMP UP USE
(NORMALLY CLOSED FLOATS)

FOR SPDT FLOATS
GREEN – N/O
WHITE – COMMON
BLACK – N/C

c UL us LISTED

TYPICAL MOUNTING

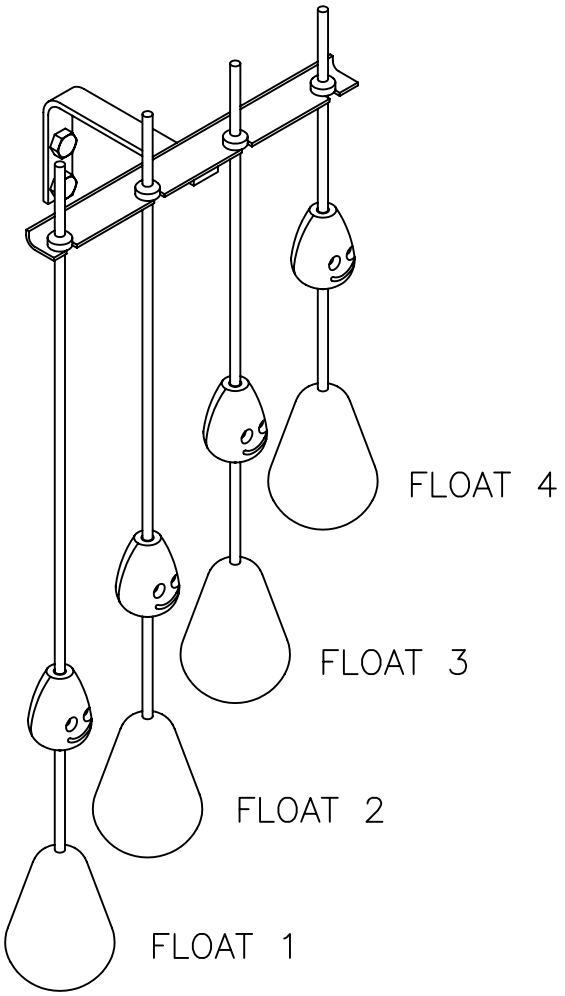

TYPICAL 2 PUMP USES

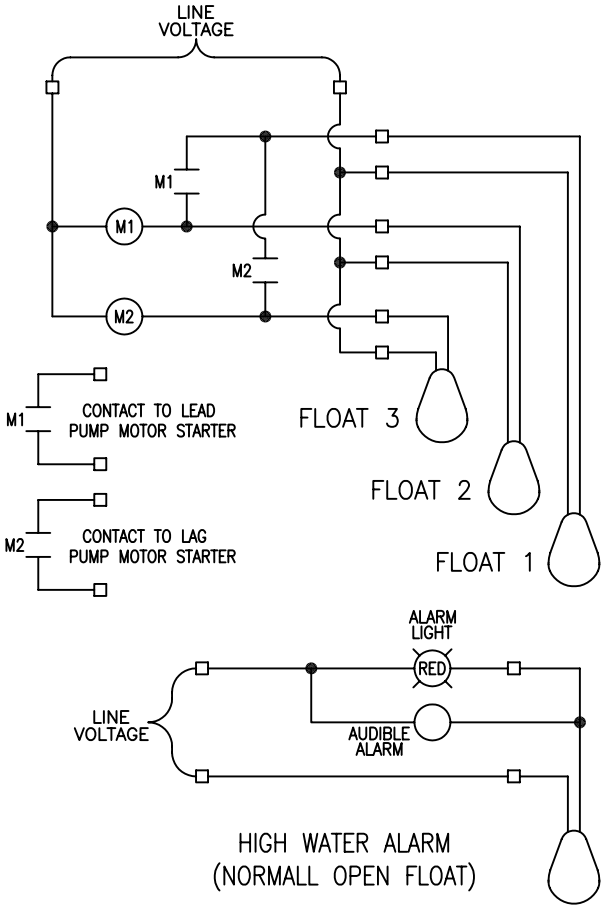

ALL INFORMATION CONTAINED IN THIS DRAWING IS CONFIDENTIAL AND PROPRIETARY TO CONERY MFG, INC.

CONERY MFG INC

CHANGES	TOLERANCES	DRAWN BY	DATE
F	DECIMALS	D. MIDDLETON	07/30/09
E	.XXX = ±.005	MATERIAL SPECIFICATION:	
D	.XX = ±.010		
C	FRACTIONAL		
B	X/X = ±.1/64		
A	ANGLES		
	X° = ±1/2°		

SPECIFICATION SHEET
MECHANICAL FLOAT

SCALE: NONE

2900 SERIES B8
NON–MERCURY

Level Pressure Flow Temperature Liquid Analysis Registration Systems Components Services Solutions

Operating Instructions

Proline Promag 50

Electromagnetic flow measuring system

HART® FIELD COMMUNICATION PROTOCOL

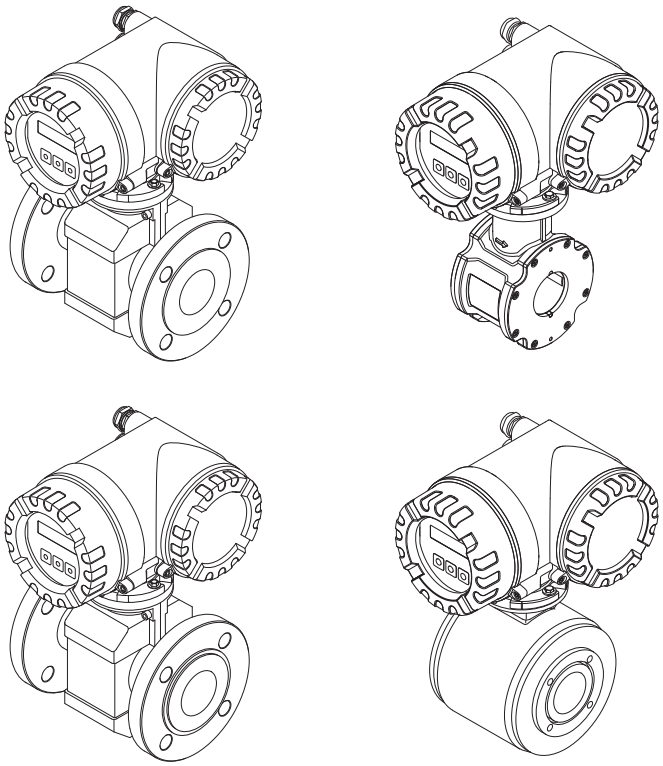

BA046D/06/en/12.09
71106181

Valid as of version
V 2.03.XX (device software)

Endress+Hauser
People for Process Automation

Table of contents

1 Safety instructions 5

1.1 Designated use 5
1.2 Installation, commissioning and operation 5
1.3 Operational safety 5
1.4 Return 6
1.5 Notes on safety conventions and icons 6

2 Identification 7

2.1 Device designation 7
2.1.1 Nameplate of the transmitter 7
2.1.2 Nameplate of the sensor 8
2.1.3 Nameplate, connections 9
2.2 Certificates and approvals 9
2.3 Registered trademarks 10

3 Installation 11

3.1 Incoming acceptance, transport and storage 11
3.1.1 Incoming acceptance 11
3.1.2 Transport 11
3.1.3 Storage 12
3.2 Installation conditions 13
3.2.1 Dimensions 13
3.2.2 Mounting location 13
3.2.3 Orientation 15
3.2.4 Vibrations 16
3.2.5 Foundations, supports 17
3.2.6 Adapters 17
3.2.7 Nominal diameter and flow rate 18
3.2.8 Length of connecting cable 20
3.3 Installation instructions 21
3.3.1 Installing the Promag D sensor 21
3.3.2 Installing the Promag L sensor 24
3.3.3 Installing the Promag W sensor 26
3.3.4 Installing the Promag P sensor 31
3.3.5 Installing the Promag H sensor 36
3.3.6 Turning the transmitter housing 39
3.3.7 Turning the onsite display 40
3.3.8 Installing the wall-mount housing 41
3.4 Post-installation check 43

4 Wiring 44

4.1 Connecting the remote version 44
4.1.1 Connecting Promag D, L, W, P, H 44
4.1.2 Cable specifications 49
4.2 Connecting the measuring unit 50
4.2.1 Connecting the transmitter 50
4.2.2 Terminal assignment 52
4.2.3 HART connection 53
4.3 Potential equalization 54
4.3.1 Potential equalization for Promag D 54
4.3.2 Potential equalization for Promag W, P, L . 54
4.3.3 Potential equalization for Promag H 54
4.3.4 Exampels for potential equalization connections for Promag D 54
4.3.5 Exampels for potential equalization connections for Promag L, W, P 55
4.4 Degree of protection 57
4.5 Post-connection check 58

5 Operation 59

5.1 Display and operating elements 59
5.2 Brief operating instructions on the function matrix . 60
5.2.1 General notes 61
5.2.2 Enabling the programming mode 61
5.2.3 Disabling the programming mode 61
5.3 Displaying error messages 62
5.3.1 Type of error 62
5.3.2 Error message types 62
5.4 Communication 63
5.4.1 Operating options 63
5.4.2 Current device description files 64
5.4.3 Device variables 64
5.4.4 Switching HART write protection on/off . . 64
5.4.5 Universal and common practice HART commands 65
5.4.6 Device status and error messages 69

6 Commissioning 71

6.1 Function check 71
6.2 Switching on the measuring device 71
6.3 Quick Setup 72
6.3.1 "Commissioning" Quick Setup menu 72
6.4 Configuration 73
6.4.1 Current output: active/passive 73
6.5 Adjustment 74
6.5.1 Empty-pipe/full-pipe adjustment 74
6.6 Data storage device (HistoROM) 75
6.6.1 HistoROM/S-DAT (sensor-DAT) 75

7 Maintenance 76

7.1 Exterior cleaning 76
7.2 Seals 76

8 Accessories 77

8.1 Device-specific accessories 77
8.2 Measuring principle-specific accessories 77
8.3 Communication-specific accessories 78
8.4 Service-specific accessories 79

9 Troubleshooting 80

9.1 Troubleshooting instructions 80
9.2 System error messages 81
9.3 Process error messages 83
9.4 Process errors without messages 84
9.5 Response of outputs to errors 85
9.6 Spare parts 87

9.6.1 Removing and installing printed circuit boards 88
9.6.2 Replacing the device fuse 92
9.6.3 Replacing the exchangeable electrode 93
9.7 Return 95
9.8 Disposal 95
9.9 Software history 95

10 Technical data 97

10.1 Technical data at a glance 97
10.1.1 Application 97
10.1.2 Function and system design 97
10.1.3 Input 97
10.1.4 Output 97
10.1.5 Power supply 99
10.1.6 Performance characteristics 100
10.1.7 Operating conditions: Installation 100
10.1.8 Operating conditions: Environment 101
10.1.9 Operating conditions: Process 102
10.1.10 Mechanical construction 107
10.1.11 Human interface 115
10.1.12 Certificates and approvals 115
10.1.13 Ordering information 116
10.1.14 Accessories 116
10.1.15 Documentation 116

Index 117

1 Safety instructions

1.1 Designated use

The measuring device described in this Operating Manual is to be used only for measuring the flow rate of conductive fluids in closed pipes.

A minimum conductivity of 20 µS/cm is required for measuring demineralized water. Most liquids can be measured as of a minimum conductivity of 5 µS/cm.

Examples:
- Acids, alkalis,
- Drinking water, wastewater, sewage sludge,
- Milk, beer, wine, mineral water, etc.

Resulting from incorrect use or from use other than that designated the operational safety of the measuring devices can be suspended. The manufacturer accepts no liability for damages being produced from this.

1.2 Installation, commissioning and operation

Please note the following:
- Installation, connection to the electricity supply, commissioning and maintenance of the device must be carried out by trained, qualified specialists authorized to perform such work by the facility's owner-operator. The specialist must have read and understood this Operating Manual and must follow the instructions it contains.
- The device must be operated by persons authorized and trained by the facility's owner-operator. Strict compliance with the instructions in the Operating Manual is mandatory.
- With regard to special fluids, including fluids used for cleaning, Endress+Hauser will be happy to assist in clarifying the corrosion-resistant properties of wetted materials.
  However, minor changes in temperature, concentration or in the degree of contamination in the process may result in variations in corrosion resistance. For this reason, Endress+Hauser does not accept any responsibility with regard to the corrosion resistance of wetted materials in a specific application.
  The user is responsible for the choice of suitable wetted materials in the process.
- If welding work is performed on the piping system, do not ground the welding appliance through the Promag flowmeter.
- The installer must ensure that the measuring system is correctly wired in accordance with the wiring diagrams. The transmitter must be grounded apart from when special protective measures are taken (e.g. galvanically isolated SELV or PELV power supply)
- Invariably, local regulations governing the opening and repair of electrical devices apply.

1.3 Operational safety

Please note the following:
- Measuring systems for use in hazardous environments are accompanied by separate Ex documentation, which is an integral part of this Operating Manual. Strict compliance with the installation instructions and ratings as stated in this supplementary documentation is mandatory. The symbol on the front of this Ex documentation indicates the approval and the certification body (e.g. Ex Europe, FM USA, CSA Canada).
- The measuring device complies with the general safety requirements in accordance with EN 61010-1, the EMC requirements of IEC/EN 61326 and NAMUR Recommendations NE 21 and NE 43.
- Depending on the application, the seals of the process connections of the Promag H sensor require periodic replacement.

- When hot fluid passes through the measuring tube, the surface temperature of the housing increases. In the case of the sensor, in particular, users should expect temperatures that can be close to the fluid temperature. If the temperature of the fluid is high, implement sufficient measures to prevent burning or scalding.
- The manufacturer reserves the right to modify technical data without prior notice. Your Endress+Hauser distributor will supply you with current information and updates to these Operating Instructions.

1.4 Return

- Do not return a measuring device if you are not absolutely certain that all traces of hazardous substances have been removed, e.g. substances which have penetrated crevices or diffused through plastic.
- Costs incurred for waste disposal and injury (burns, etc.) due to inadequate cleaning will be charged to the owner-operator.

1.5 Notes on safety conventions and icons

The devices are designed to meet state-of-the-art safety requirements, have been tested, and left the factory in a condition in which they are safe to operate. The devices comply with the applicable standards and regulations in accordance with EN 61010-1 "Safety requirements for electrical equipment for measurement, control and laboratory use".
The devices can, however, be a source of danger if used incorrectly or for anything other than the designated use. Consequently, always pay particular attention to the safety instructions indicated in this Operating Manual by the following icons:

Warning!
"Warning" indicates an action or procedure which, if not performed correctly, can result in injury or a safety hazard. Comply strictly with the instructions and proceed with care.

Caution!
"Caution" indicates an action or procedure which, if not performed correctly, can result in incorrect operation or destruction of the device. Comply strictly with the instructions.

Note!
"Note" indicates an action or procedure which, if not performed correctly, can have an indirect effect on operation or trigger an unexpected response on the part of the device.

2 Identification

2.1 Device designation

The flow measuring system consists of the following components:

- Promag 50 transmitter
- Promag D, Promag L, Promag W, Promag P or Promag H sensor

In the *compact version*, the transmitter and sensor form a single mechanical unit; in the *remote version* they are installed separately.

2.1.1 Nameplate of the transmitter

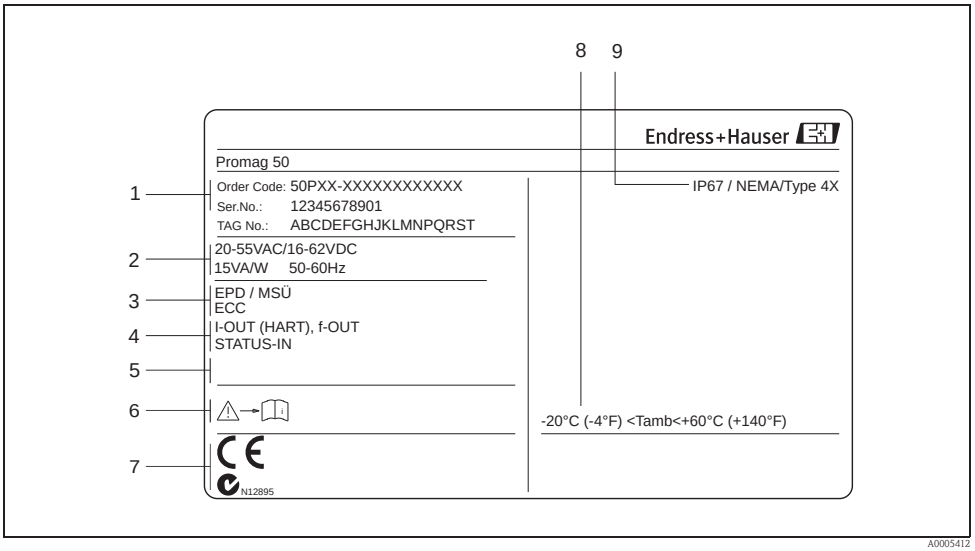

Fig. 1: Nameplate specifications for the "Promag 50" transmitter (example)

1 Ordering code/serial number: See the specifications on the order confirmation for the meanings of the individual letters and digits.
2 Power supply, frequency, power consumption
3 Additional information:
EPD/MSÜ: with Empty Pipe Detection
ECC: with electrode cleaning
4 Outputs available:
I-OUT (HART): with current output (HART)
f-OUT (HART): with frequency output
STATUS-IN: with status input (power supply)
5 Reserved for information on special products
6 Observe device documentation
7 Reserved for additional information on device version (approvals, certificates)
8 Permitted ambient temperature range
9 Degree of protection

2.1.2 Nameplate of the sensor

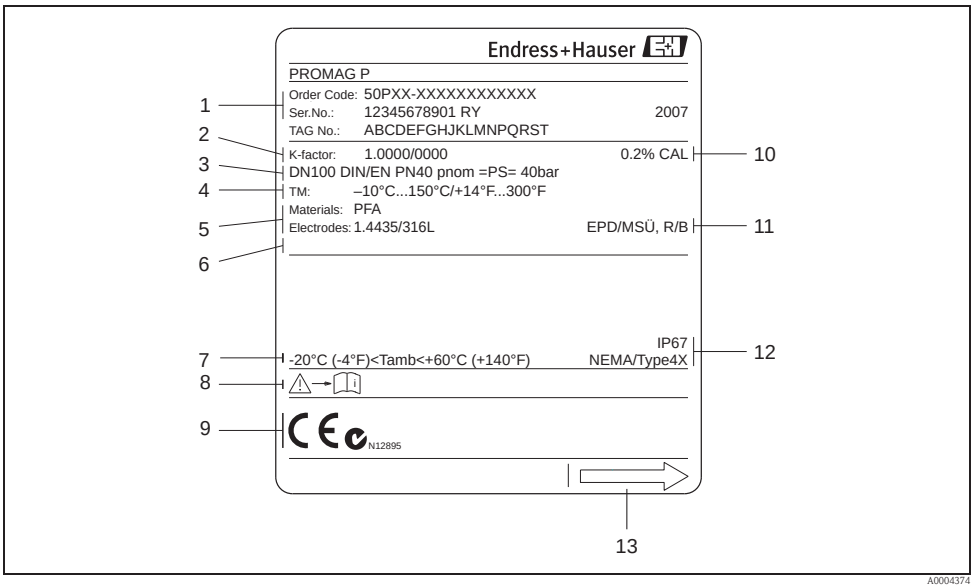

Fig. 2: Nameplate specifications for the "Promag" sensor (example)

1 *Ordering code/serial number: See the specifications on the order confirmation for the meanings of the individual letters and digits.*
2 *Calibration factor with zero point*
3 *Nominal diameter / Pressure rating*
4 *Fluid temperature range*
5 *Materials: lining/measuring electrodes*
6 *Reserved for information on special products*
7 *Permitted ambient temperature range*
8 *Observe device documentation*
9 *Reserved for additional information on device version (approvals, certificates)*
10 *Calibration tolerance*
11 *Additional information (examples):*
   – *EPD/MSÜ: with Empty Pipe Detection electrode*
   – *R/B: with reference electrode*
12 *Degree of protection*
13 *Flow direction*

2.1.3 Nameplate, connections

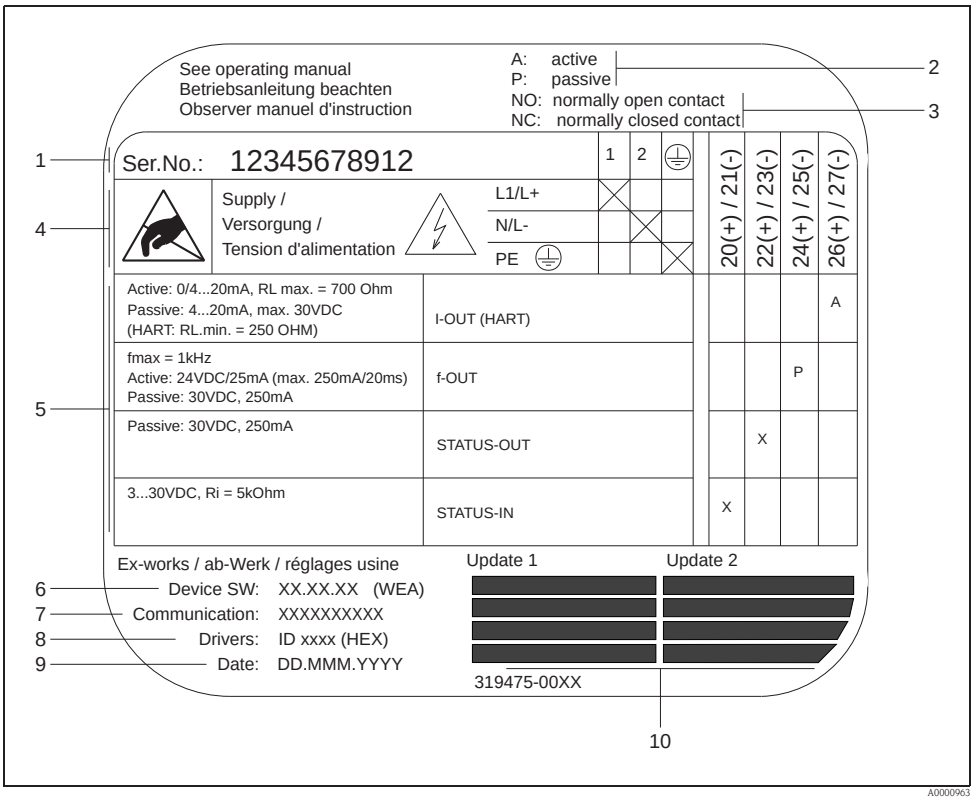

Fig. 3: Nameplate specifications for transmitter (example)

1 *Serial number*
2 *Possible configuration of current output*
3 *Possible configuration of relay contacts*
4 *Terminal assignment, cable for power supply: 85 to 260 V AC, 20 to 55 V AC, 16 to 62 V DC*
Terminal ***No. 1****: L1 for AC, L+ for DC*
Terminal ***No. 2****: N for AC, L– for DC*
5 *Signals present at inputs and outputs, possible configuration and terminal assignment (20 to 27), see also "Electrical values of inputs/outputs"*
6 *Version of device software currently installed*
7 *Installed communication type, e.g.: HART, PROFIBUS PA, etc.*
8 *Information on current communication software (Device Revision and Device Description), e.g.: Dev. 01 / DD 01 for HART*
9 *Date of installation*
10 *Current updates to data specified in points 6 to 9*

2.2 Certificates and approvals

The devices are designed to meet state-of-the-art safety requirements in accordance with sound engineering practice. They have been tested and left the factory in a condition in which they are safe to operate.

The devices comply with the applicable standards and regulations in accordance with EN 61010-1 "Safety requirements for electrical equipment for measurement, control and laboratory use" and with the EMC requirements of IEC/EN 61326/A1.

The measuring system described in this Operating Manual is therefore in conformity with the statutory requirements of the EC Directives. Endress+Hauser confirms successful testing of the device by affixing to it the CE mark.

The measuring system meets the EMC requirements of the Australian Communications and Media Authority (ACMA)

2.3 Registered trademarks

KALREZ® and VITON®
Registered trademarks of E.I. Du Pont de Nemours & Co., Wilmington, USA

TRI-CLAMP®
Registered trademark of Ladish & Co., Inc., Kenosha, USA

HART®
Registered trademark of the HART Communication Foundation, Austin, USA

HistoROM™, S-DAT®, Field Xpert™, FieldCare®, Fieldcheck®, Applicator®
Registered or registration-pending trademarks of Endress+Hauser Flowtec AG, Reinach, CH

3 Installation

3.1 Incoming acceptance, transport and storage

3.1.1 Incoming acceptance

On receipt of the goods, check the following:
- Check the packaging and the contents for damage.
- Check the shipment, make sure nothing is missing and that the scope of supply matches your order.

3.1.2 Transport

The following instructions apply to unpacking and to transporting the device to its final location:
- Transport the devices in the containers in which they are delivered.
- Do not remove the protective plates or caps on the process connections until you are ready to install the device. This is particularly important in the case of sensors with PTFE linings.

Special notes on flanged devices

Caution!
- The wooden covers mounted on the flanges from the factory protect the linings on the flanges during storage and transportation. In case of Promag L they are additionally used to hold the lap joint flanges in place. Do not remove these covers until **immediately before** the device in the pipe.
- Do not lift flanged devices by the transmitter housing, or the connection housing in the case of the remote version.

Transporting flanged devices DN ≤ 300 (≤ 12")

Use webbing slings slung round the two process connections. Do not use chains, as they could damage the housing.

Warning!
Risk of injury if the measuring device slips. The center of gravity of the assembled measuring device might be higher than the points around which the slings are slung.
At all times, therefore, make sure that the device does not unexpectedly turn around its axis or slip.

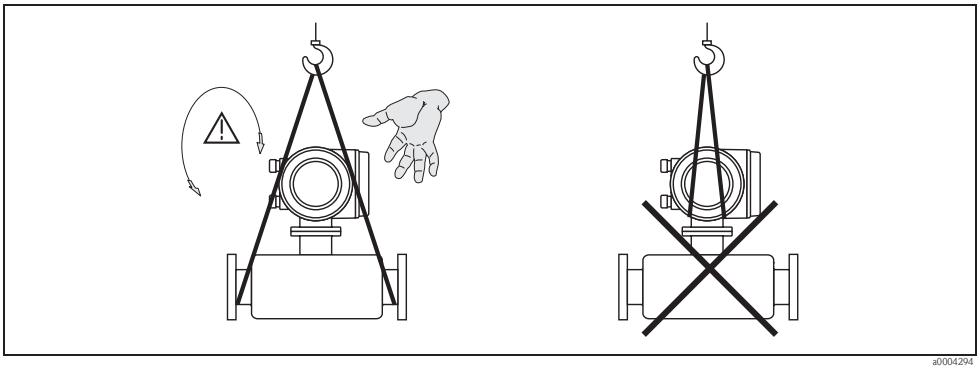

Fig. 4: Transporting sensors with DN ≤ 300 (≤ 12")

Transporting flangeddevices DN > 300 (> 12")

Use only the metal eyes on the flanges for transporting the device, lifting it and positioning the sensor in the piping.

Caution!
Do not attempt to lift the sensor with the tines of a fork-lift truck beneath the metal casing. This would buckle the casing and damage the internal magnetic coils.

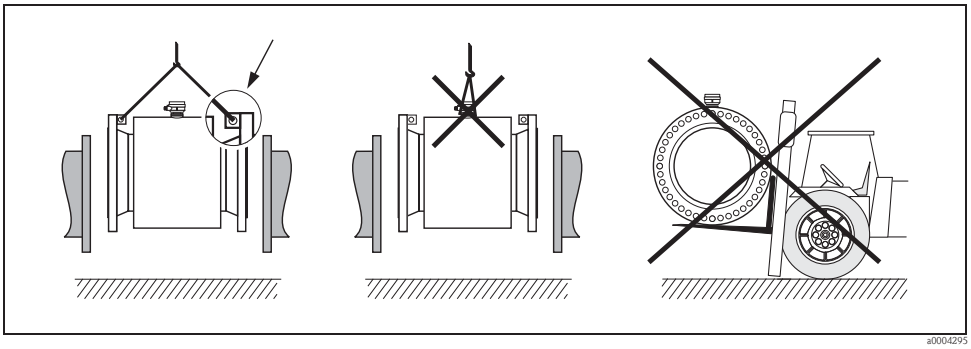

Fig. 5: Transporting sensors with DN > 300 (> 12")

3.1.3 Storage

Please note the following:
- Pack the measuring device in such a way as to protect it reliably against impact for storage (and transportation). The original packaging provides optimum protection.
- The storage temperature corresponds to the operating temperature range of the measuring transmitter and the appropriate measuring sensors → 101.
- Do not remove the protective plates or caps on the process connections until you are ready to install the device. This is particularly important in the case of sensors with PTFE linings.
- The measuring device must be protected against direct sunlight during storage in order to avoid unacceptably high surface temperatures.
- Choose a storage location where moisture does not collect in the measuring device. This will help prevent fungus and bacteria infestation which can damage the liner.

3.2 Installation conditions

3.2.1 Dimensions

The dimensions and installation lengths of the sensor and transmitter can be found in the "Technical Information" for the device in question. This document can be downloaded as a PDF file from www.endress.com. A list of the "Technical Information" documents available is provided in the "Documentation" section on → 116.

3.2.2 Mounting location

Entrained air or gas bubble formation in the measuring tube can result in an increase in measuring errors.
Avoid the following locations:
- Highest point of a pipeline. Risk of air accumulating!
- Directly upstream from a free pipe outlet in a vertical pipeline.

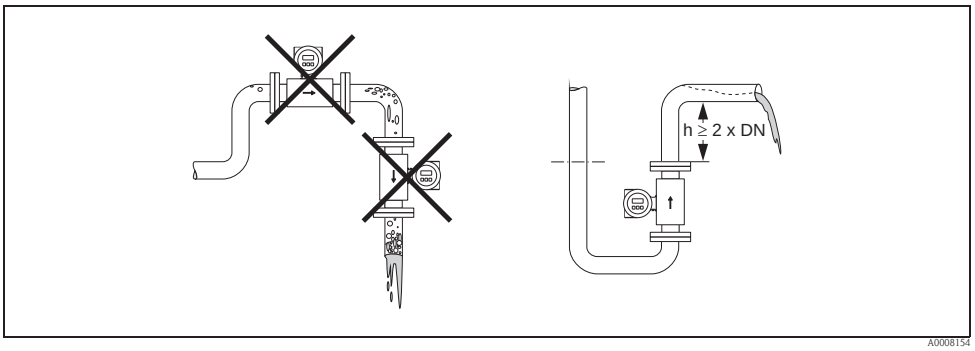

Fig. 6: Mounting location

Installation of pumps

Do **not** install the sensor on the intake side of a pump. This precaution is to avoid low pressure and the consequent risk of damage to the lining of the measuring tube. Information on the lining's resistance to partial vacuum can be found on → 105.

It might be necessary to install pulse dampers in systems incorporating reciprocating, diaphragm or peristaltic pumps. Information on the measuring system's resistance to vibration and shock can be found on → 101.

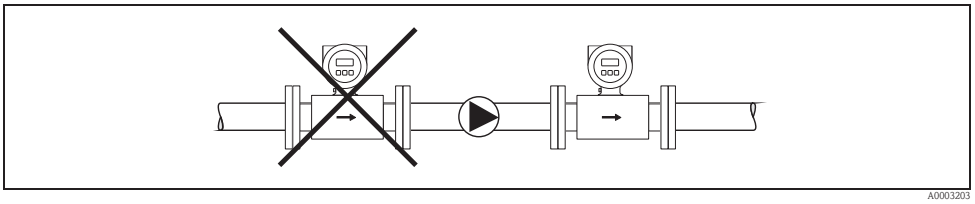

Fig. 7: Installation of pumps

Partially filled pipes

Partially filled pipes with gradients necessitate a drain-type configuration.
The Empty Pipe Detection function (EPD → 📄 74) offers additional protection by detecting empty or partially filled pipes.

Caution!
Risk of solids accumulating. Do not install the sensor at the lowest point in the drain. It is advisable to install a cleaning valve.

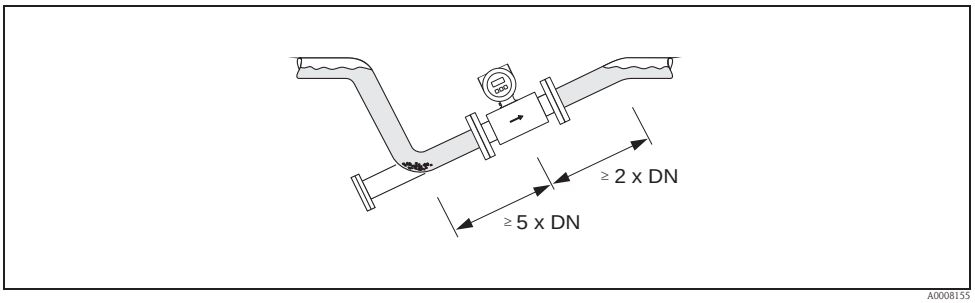

Fig. 8: Installation in a partially filled pipe

Down pipes

Install a siphon or a vent valve downstream of the sensor in down pipes whose length h ≥ 5 m (16.4 ft). This precaution is to avoid low pressure and the consequent risk of damage to the lining of the measuring tube.
This measure also prevents the system losing prime, which could cause air pockets. Information on the lining's resistance to partial vacuum can be found on → 📄 105.

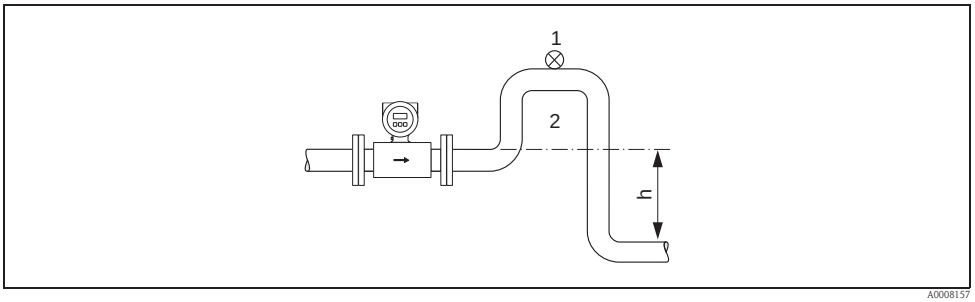

Fig. 9: Measures for installation in a down pipe

1 Vent valve
2 Pipe siphon
h Length of down pipe

3.2.3 Orientation

An optimum orientation position helps avoid gas and air accumulations and deposits in the measuring tube. However, Promag offers the additional Empty Pipe Detection (EPD) function to ensure the detection of partially filled measuring tubes, e.g. in the case of degassing fluids or varying process pressure:

- Electrode Cleaning Circuit (ECC) for applications with accretive fluids, e.g. electrically conductive deposits (→ "Description of Device Functions" manual).
- Empty Pipe Detection (EPD) ensures the detection of partially filled measuring tubes, e.g. in the case of degassing fluids (→ 📄 74)
- Exchangeable Measuring Electrodes for abrasive fluids (→ 📄 93)

Vertical orientation

This is the ideal orientation for self-emptying piping systems and for use in conjunction with Empty Pipe Detection.

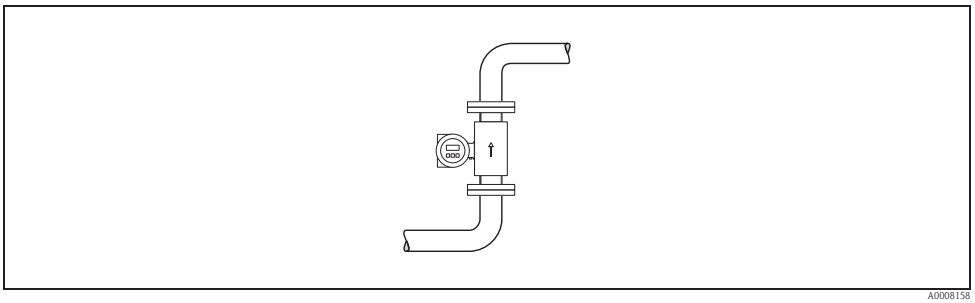

Fig. 10: Vertical orientation

Horizontal orientation

The measuring electrode plane should be horizontal. This prevents brief insulation of the two measuring electrodes by entrained air bubbles.

Caution!
Empty Pipe Detection functions correctly only when the measuring device is installed horizontally and the transmitter housing is facing upward (→ 10). Otherwise there is no guarantee that Empty Pipe Detection will respond if the measuring tube is only partially filled or empty.

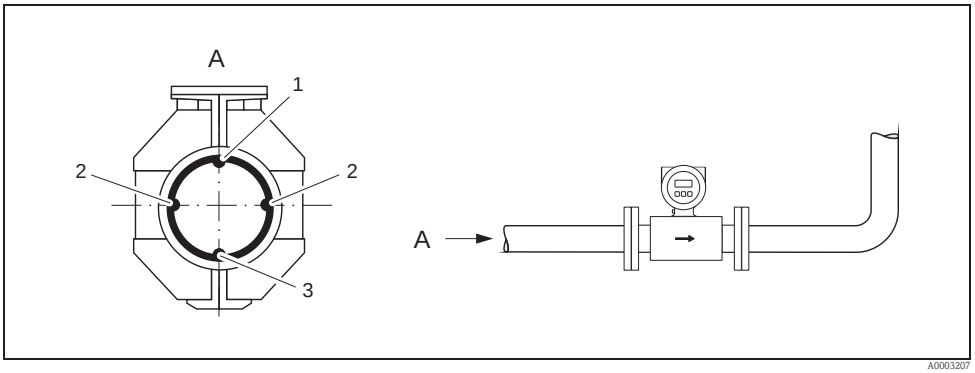

Fig. 11: Horizontal orientation

1 EPD electrode for the detection of empty pipes (not with Promag D and Promag H (DN 2 to 15; 1/12" to ½"))
2 Measuring electrodes for signal detection
3 Reference electrode for the potential equalization (not with Promag D and H)

Inlet and outlet run

If possible, install the sensor upstream from fittings such as valves, T-pieces, elbows, etc. The following inlet and outlet runs must be observed in order to meet accuracy specifications:
- Inlet run: ≥ 5 × DN
- Outlet run: ≥ 2 × DN

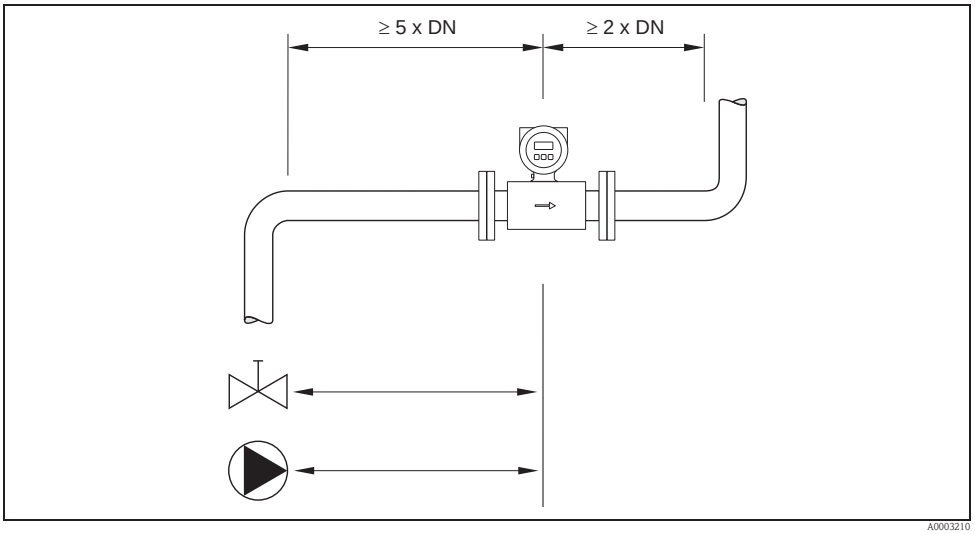

Fig. 12: Inlet and outlet runs

3.2.4 Vibrations

Secure the piping and the sensor if vibration is severe.

Caution!
If vibrations are too severe, we recommend the sensor and transmitter be mounted separately. Information on resistance to vibration and shock can be found on → 101.

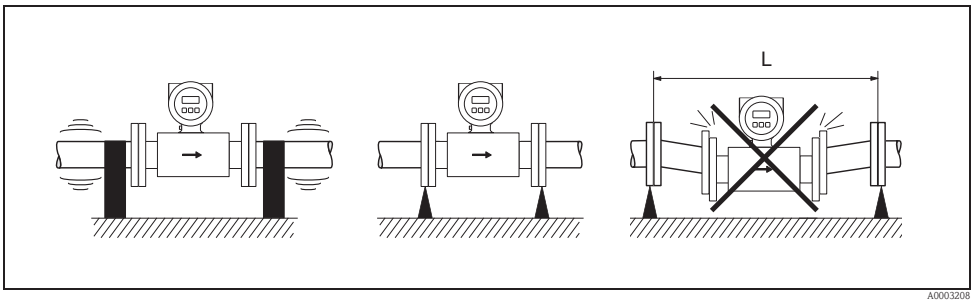

Fig. 13: Measures to prevent vibration of the device (L > 10 m (32.8 ft))

3.2.5 Foundations, supports

If the nominal diameter is DN ≥ 350, mount the sensor on a foundation of adequate load-bearing strength.

Caution!
Risk of damage.
Do not support the weight of the sensor on the metal casing: the casing would buckle and damage the internal magnetic coils.

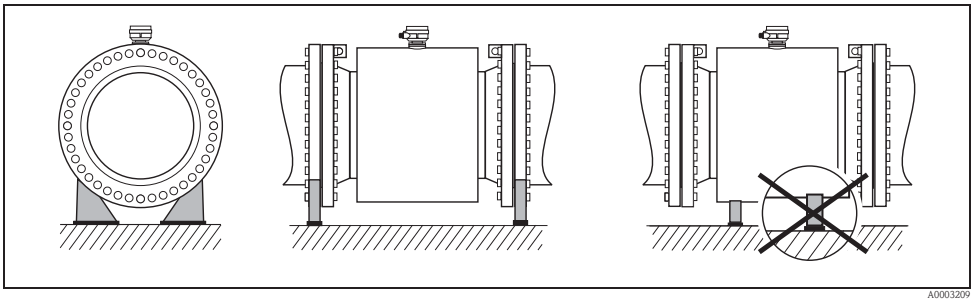

Fig. 14: Correct support for large nominal diameters (DN ≥ 350)

3.2.6 Adapters

Suitable adapters to DIN EN 545 (double-flange reducers) can be used to install the sensor in larger-diameter pipes.
The resultant increase in the rate of flow improves measuring accuracy with very slow-moving fluids. The nomogram shown here can be used to calculate the pressure loss caused by reducers and expanders.

Note!
The nomogram only applies to liquids of viscosity similar to water.

1. Calculate the ratio of the diameters d/D.
2. From the nomogram read off the pressure loss as a function of flow velocity (*downstream* from the reduction) and the d/D ratio.

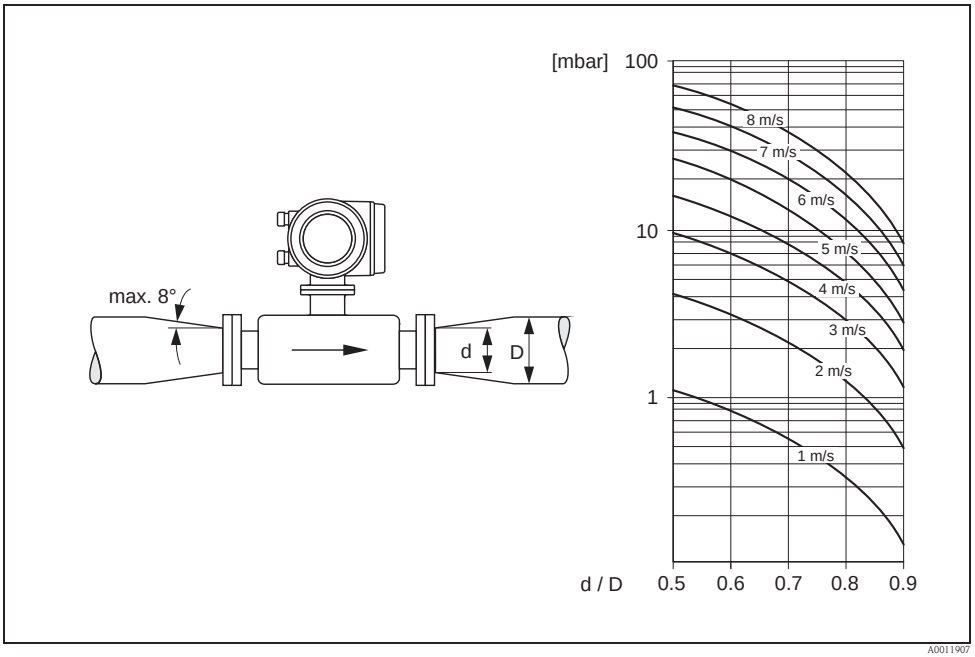

Fig. 15: Pressure loss due to adapters

3.2.7 Nominal diameter and flow rate

The diameter of the pipe and the flow rate determine the nominal diameter of the sensor. The optimum velocity of flow is between 2 and 3 m/s (6.5 to 9.8 ft/s)

The velocity of flow (v), moreover, has to be matched to the physical properties of the fluid:
- v < 2 m/s (v < 6.5 ft/s): for abrasive fluids
- v > 2 m/s (v > 6.5 ft/s): for fluids producing buildup

Note!
Flow velocity can be increased, if necessary, by reducing the nominal diameter of the sensor (→ 17).

Recommended flow (SI units)

Nominal diameter [mm]	Promag D	Promag L	Promag W	Promag P	Promag H
	Min./max. full scale value (v ≈ 0.3 or 10 m/s) in [dm³/min]				
2	–	–	–	–	0.06 to 1.8
4	–	–	–	–	0.25 to 7
8	–	–	–	–	1 to 30
15	–	–	–	4 to 100	4 to 100
25	9 to 300	–	9 to 300	9 to 300	9 to 300
32	–	–	15 to 500	15 to 500	–
40	25 to 700	–	25 to 700	25 to 700	25 to 700
50	35 to 1100	35 to 1100	35 to 1100	35 to 1100	35 to 1100
65	60 to 2000	60 to 2000	60 to 2000	60 to 2000	60 to 2000
80	90 to 3000	90 to 3000	90 to 3000	90 to 3000	90 to 3000
100	145 to 4700	145 to 4700	145 to 4700	145 to 4700	145 to 4700
125	–	220 to 7500	220 to 7500	220 to 7500	–
[mm]	Min./max. full scale value (v ≈ 0.3 or 10 m/s) in [m³/h]				
150	–	20 to 600	20 to 600	20 to 600	–
200	–	35 to 1100	35 to 1100	35 to 1100	–
250	–	55 to 1700	55 to 1700	55 to 1700	–
300	–	80 to 2400	80 to 2400	80 to 2400	–
350	–	–	110 to 3300	110 to 3300	–
375	–	–	140 to 4200	–	–
400	–	–	140 to 4200	140 to 4200	–
450	–	–	180 to 5400	180 to 5400	–
500	–	–	220 to 6600	220 to 6600	–
600	–	–	310 to 9600	310 to 9600	–
700	–	–	420 to 13500	–	–
800	–	–	550 to 18000	–	–
900	–	–	690 to 22500	–	–
1000	–	–	850 to 28000	–	–
1200	–	–	1250 to 40000	–	–
1400	–	–	1700 to 55000	–	–
1600	–	–	2200 to 70000	–	–
1800	–	–	2800 to 90000	–	–
2000	–	–	3400 to 110000	–	–

Recommended flow (US units)

Nominal diameter	Promag D	Promag L	Promag W	Promag P	Promag H
[inch]	Min./max. full scale value (v ≈ 0.3 or 10 m/s) in [gal/min]				
1 1/12"	–	–	–	–	0.015 to 0.5
5/32"	–	–	–	–	0.07 to 2
5/16"	–	–	–	–	0.25 to 8
1/2"	–	–	–	1.0 to 27	1.0 to 27
1"	2.5 to 80	–	2.5 to 80	2.5 to 80	2.5 to 80
1 1/4"	–	–	4 to 130	4 to 130	–
1 1/2"	7 to 190	7 to 190	7 to 190	7 to 190	7 to 190
2"	10 to 300	10 to 300	10 to 300	10 to 300	10 to 300
2 1/2"	16 to 500	16 to 500	16 to 500	16 to 500	16 to 500
3"	24 to 800	24 to 800	24 to 800	24 to 800	24 to 800
4"	40 to 1250	40 to 1250	40 to 1250	40 to 1250	40 to 1250
5"	–	60 to 1950	60 to 1950	60 to 1950	–
6"	–	90 to 2650	90 to 2650	90 to 2650	–
8"	–	155 to 4850	155 to 4850	155 to 4850	–
10"	–	250 to 7500	250 to 7500	250 to 7500	–
12"	–	350 to 10600	350 to 10600	350 to 10600	–
14"	–	–	500 to 15000	500 to 15000	–
15"	–	–	600 to 19000	–	–
16"	–	–	600 to 19000	600 to 19000	–
18"	–	–	800 to 24000	800 to 24000	–
20"	–	–	1000 to 30000	1000 to 30000	–
24"	–	–	1400 to 44000	1400 to 44000	–
28"	–	–	1900 to 60000	–	–
30"	–	–	2150 to 67000	–	–
32"	–	–	2450 to 80000	–	–
36"	–	–	3100 to 100000	–	–
40"	–	–	3800 to 125000	–	–
42"	–	–	4200 to 135000	–	–
48"	–	–	5500 to 175000	–	–
[inch]	Min./max. full scale value (v ≈ 0.3 or 10 m/s) in [Mgal/d]				
54"	–	–	9 to 300	–	–
60"	–	–	12 to 380	–	–
66"	–	–	14 to 500	–	–
72"	–	–	16 to 570	–	–
78"	–	–	18 to 650	–	–

3.2.8 Length of connecting cable

In order to ensure measuring accuracy, comply with the following instructions when installing the remote version:

- Fix cable run or lay in armored conduit. Cable movements can falsify the measuring signal especially in the case of low fluid conductivities.
- Route the cable well clear of electrical machines and switching elements.
- Ensure potential equalization between sensor and transmitter, if necessary.
- The permitted connecting cable length L_{max} is determined by the fluid conductivity (→ 16). A minimum conductivity of 20 µS/cm is required for measuring demineralized water. Most liquids can be measured as of a minimum conductivity of 5 µS/cm.
- The maximum connecting cable length is 10 m (32.8 ft) when empty pipe detection (EPD → 74) is switched on.

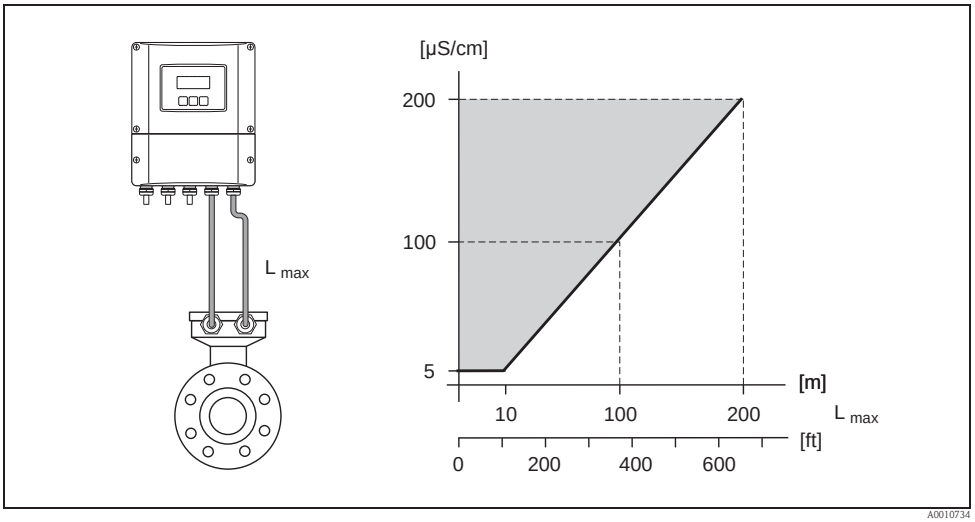

Fig. 16: Permissible cable length for the remote version

Area shaded gray = permitted range
Lmax = connecting cable length in [m]
Fluid conductivity in [µS/cm]

3.3 Installation instructions

3.3.1 Installing the Promag D sensor

The sensor is installed between the pipe flanges with a mounting kit. The device is centered using recesses on the sensor (→ 22).

Note!
A mounting kit consisting of mounting bolts, seals, nuts and washers can be ordered separately (→ 77). Centering sleeves are provided with the device if they are required for the installation.

Caution!
When installing the transmitter in the pipe, observe the necessary torques (→ 23).

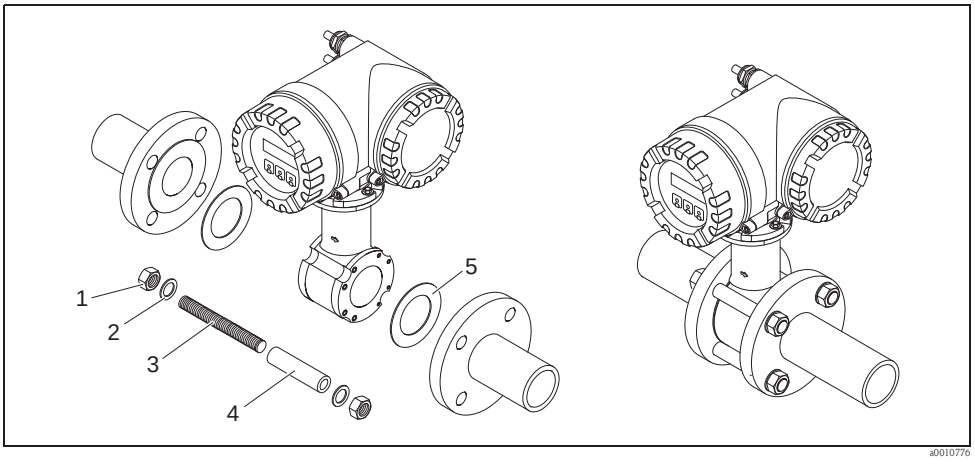

Fig. 17: Mounting the sensor

1 Nut
2 Washer
3 Mounting bolt
4 Centering sleeve
5 Seal

Seals

When installing the sensor, make sure that the seals used do not project into the pipe cross-section.

Caution!
Risk of short circuit! Do not use electrically conductive sealing compounds such as graphite! An electrically conductive layer could form on the inside of the measuring tube and short-circuit the measuring signal.

Note!
Use seals with a hardness rating of 70° Shore.

Arrangement of the mounting bolts and centering sleeves

The device is centered using recesses on the sensor. The arrangement of the mounting bolts and the use of the centering sleeves supplied depend on the nominal diameter, the flange standard und the pitch circle diameter.

	Process connection		
	EN (DIN)	ANSI	JIS
DN 25 to 40 (DN 1" to 1 ½")	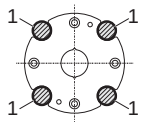 A0010896	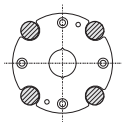 A0010824	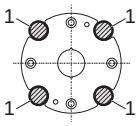 A0010896
DN 50 (DN 2")	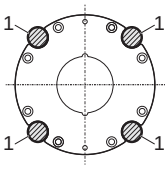 A0010897	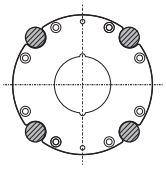 A0010825	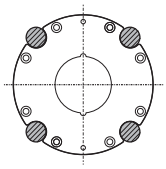 A0010825
DN 65	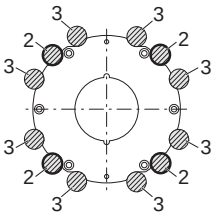 A0012170	—	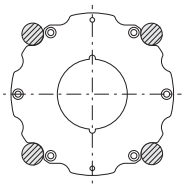 A0012171
DN 80 (DN 3")	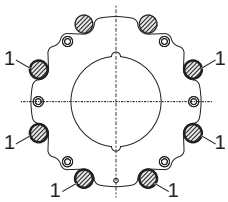 A0010898	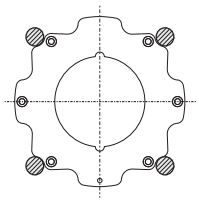 A0010827	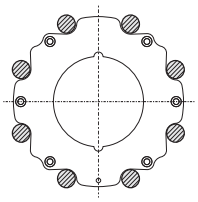 A0010826
DN 100 (DN 4")	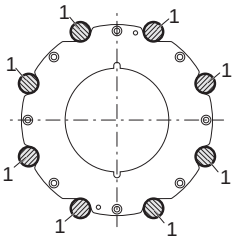 A0012168	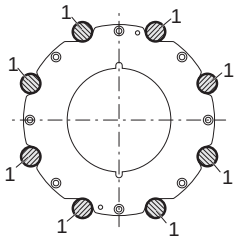 A0012168	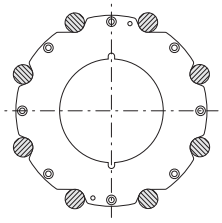 A0012169

1 = Mounting bolts with centering sleeves
2 = EN (DIN) flanges: 4-hole → with centering sleeves
3 = EN (DIN) flanges: 8-hole → without centering sleeves

Screw tightening torques (Promag D)

Please note the following:
- The tightening torques listed below are for lubricated threads only.
- Always tighten the screws uniformly and in diagonally opposite sequence.
- Overtightening the screws will deform the sealing faces or damage the seals.
- The tightening torques listed below apply only to pipes not subjected to tensile stress.

The tightening torques apply to situations where an EPDM soft material flat seal (e.g. 70 Shore) is used.

Tightening torques, mounting bolts and centering sleeves for EN (DIN) PN 16

Nominal diameter [mm]	Mounting bolts [mm]	Centering sleeve length [mm]	Tightening torque [Nm] with a process flange with a smooth seal face	raised face
25	4 × M12 × 145	54	19	19
40	4 × M16 × 170	68	33	33
50	4 × M16 × 185	82	41	41
65[1)]	4 × M16 × 200	92	44	44
65[2)]	8 × M16 × 200	– [3)]	29	29
80	8 × M16 × 225	116	36	36
100	8 × M16 × 260	147	40	40

[1)] EN (DIN) flanges: 4-hole → with centering sleeves
[2)] EN (DIN) flanges: 8-hole → without centering sleeves
[3)] A centering sleeve is not required. The device is centered directly via the sensor housing.

Tightening torques, mounting bolts and centering sleeves for JIS 10 K

Nominal diameter [mm]	Mounting bolts [mm]	Centering sleeve length [mm]	Tightening torque [Nm] with a process flange with a smooth seal face	raised face
25	4 × M16 × 170	54	24	24
40	4 × M16 × 170	68	32	25
50	4 × M16 × 185	– *	38	30
65	4 × M16 × 200	– *	42	42
80	8 × M16 × 225	– *	36	28
100	8 × M16 × 260	– *	39	37

* A centering sleeve is not required. The device is centered directly via the sensor housing.

Tightening torques, mounting bolts and centering sleeves for ANSI Class 150

Nominal diameter [inch]	Mounting bolts [inch]	Centering sleeve length [inch]	Tightening torque [lbf · ft] with a process flange with a smooth seal face	raised face
1"	4 × UNC 1/2" × 5.70"	– *	14	7
1 ½"	4 × UNC 1/2" × 6.50"	– *	21	14
2"	4 × UNC 5/8" × 7.50"	– *	30	27
3"	4 × UNC 5/8" × 9.25"	– *	31	31
4"	8 × UNC 5/8" × 10,4"	5,79	28	28

* A centering sleeve is not required. The device is centered directly via the sensor housing.

3.3.2 Installing the Promag L sensor

Caution!
- The protective covers mounted on the two sensor flanges are used to hold the lap joint flanges in place and to protect the PTFE liner during transportation. Consequently, do not remove these covers until immediately before the sensor is installed in the pipe.
- The covers must remain in place while the device is in storage.
- Make sure that the lining is not damaged or removed from the flanges.

Note!
Bolts, nuts, seals, etc. are not included in the scope of supply and must be supplied by the customer.

The sensor is designed for installation between the two piping flanges.
- Observe in any case the necessary screw tightening torques on → 25
- If grounding disks are used, follow the mounting instructions which will be enclosed with the shipment
- To comply with the device specification, a concentrical installation in the measuring section is required

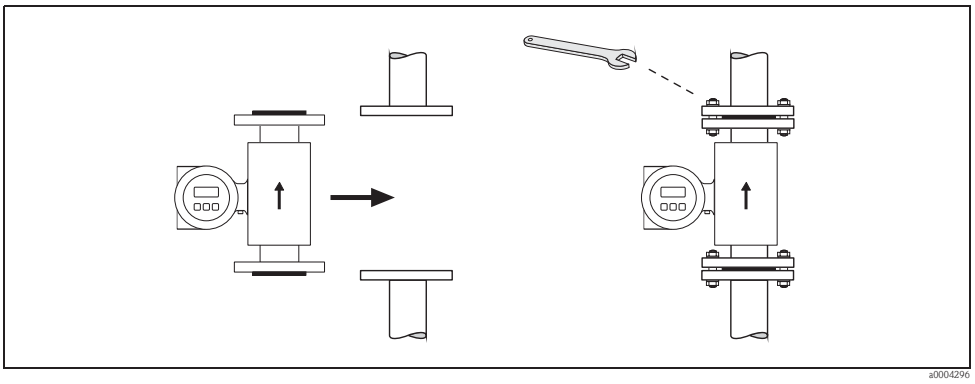

Fig. 18: Installing the Promag L sensor

Seals

Comply with the following instructions when installing seals:
- **No** seals are required.
- For DIN flanges, use only seals according to EN 1514-1.
- Make sure that the seals do not protrude into the piping cross-section.

Caution!
Risk of short circuit!
Do not use electrically conductive sealing compounds such as graphite! An electrically conductive layer could form on the inside of the measuring tube and short-circuit the measuring signal.

Ground cable

- If necessary, special ground cables for potential equalization can be ordered as an accessory (→ 77).
- Information on potential equalization and detailed mounting instructions for the use of ground cables can be found on → 55.

Screw tightening torques (Promag L)

Please note the following:
- The tightening torques listed below are for lubricated threads only.
- Always tighten the screws uniformly and in diagonally opposite sequence.
- Overtightening the screws will deform the sealing faces or damage the seals.
- The tightening torques listed below apply only to pipes not subjected to tensile stress.

Promag L tightening torques for EN (DIN)

Nominal diameter [mm]	EN (DIN) Pressure rating [bar]	Threaded fasteners	Max. tightening torque Polyurethan [Nm]	Max. tightening torque PTFE [Nm]
50	PN 10/16	4 × M 16	15	40
65*	PN 10/16	8 × M 16	10	22
80	PN 10/16	8 × M 16	15	30
100	PN 10/16	8 × M 16	20	42
125	PN 10/16	8 × M 16	30	55
150	PN 10/16	8 × M 20	50	90
200	PN 10	8 × M 20	65	130
250	PN 10	12 × M 20	50	90
300	PN 10	12 × M 20	55	100
* Designed acc. to EN 1092-1 (not to DIN 2501)				

Promag L tightening torques for ANSI

Nominal diameter [mm]	Nominal diameter [inch]	ANSI Pressure rating [lbs]	Threaded fasteners	Max. tightening torque Polyurethane [Nm]	Max. tightening torque Polyurethane [lbf · ft]	Max. tightening torque PTFE [Nm]	Max. tightening torque PTFE [lbf · ft]
50	2"	Class 150	4 × 5/8"	15	11	40	29
80	3"	Class 150	4 × 5/8"	25	18	65	48
100	4"	Class 150	8 × 5/8"	20	15	44	32
150	6"	Class 150	8 × ¾"	45	33	90	66
200	8"	Class 150	8 × ¾"	65	48	125	92
250	10"	Class 150	12 × 7/8"	55	41	100	74
300	12"	Class 150	12 × 7/8"	68	56	115	85

3.3.3 Installing the Promag W sensor

Note!
Bolts, nuts, seals, etc. are not included in the scope of supply and must be supplied by the customer.

The sensor is designed for installation between the two piping flanges.
- Observe in any case the necessary screw tightening torques on → 26
- If grounding disks are used, follow the mounting instructions which will be enclosed with the shipment

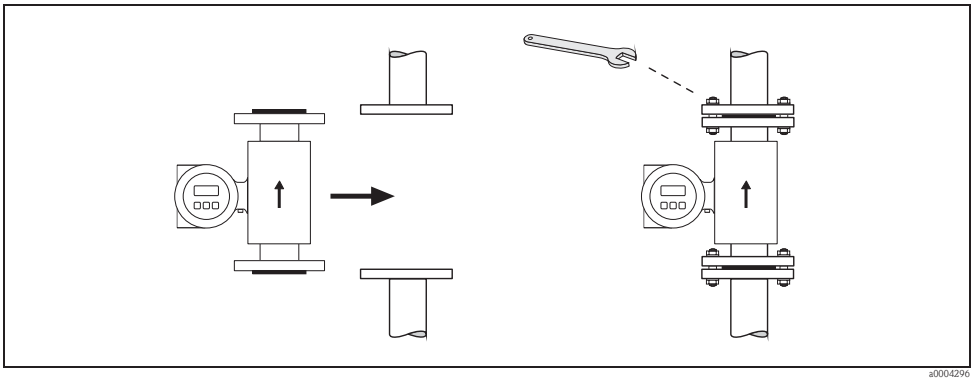

Fig. 19: Installing the Promag W sensor

Seals

Comply with the following instructions when installing seals:
- Hard rubber lining → additional seals are **always** necessary.
- Polyurethane lining → **no** seals are required.
- For DIN flanges, use only seals according to EN 1514-1.
- Make sure that the seals do not protrude into the piping cross-section.

Caution!
Risk of short circuit!
Do not use electrically conductive sealing compounds such as graphite! An electrically conductive layer could form on the inside of the measuring tube and short-circuit the measuring signal.

Ground cable

- If necessary, special ground cables for potential equalization can be ordered as an accessory (→ 77).
- Information on potential equalization and detailed mounting instructions for the use of ground cables can be found on → 55

Screw tightening torques (Promag W)

Please note the following:
- The tightening torques listed below are for lubricated threads only.
- Always tighten the screws uniformly and in diagonally opposite sequence.
- Overtightening the screws will deform the sealing faces or damage the seals.
- The tightening torques listed below apply only to pipes not subjected to tensile stress.

Tightening torques for:
- EN (DIN)→ 📄 27
- JIS→ 📄 29
- ANSI→ 📄 28
- AWWA → 📄 29
- AS 2129 → 📄 30
- AS 4087 → 📄 30

Promag W tightening torques for EN (DIN)

Nominal diameter [mm]	EN (DIN) Pressure rating [bar]	Threaded fasteners	Max. tightening torque [Nm]	
			Hard rubber	Polyurethane
25	PN 40	4 × M 12	–	15
32	PN 40	4 × M 16	–	24
40	PN 40	4 × M 16	–	31
50	PN 40	4 × M 16	–	40
65*	PN 16	8 × M 16	32	27
65	PN 40	8 × M 16	32	27
80	PN 16	8 × M 16	40	34
80	PN 40	8 × M 16	40	34
100	PN 16	8 × M 16	43	36
100	PN 40	8 × M 20	59	50
125	PN 16	8 × M 16	56	48
125	PN 40	8 × M 24	83	71
150	PN 16	8 × M 20	74	63
150	PN 40	8 × M 24	104	88
200	PN 10	8 × M 20	106	91
200	PN 16	12 × M 20	70	61
200	PN 25	12 × M 24	104	92
250	PN 10	12 × M 20	82	71
250	PN 16	12 × M 24	98	85
250	PN 25	12 × M 27	150	134
300	PN 10	12 × M 20	94	81
300	PN 16	12 × M 24	134	118
300	PN 25	16 × M 27	153	138
350	PN 6	12 × M 20	111	120
350	PN 10	16 × M 20	112	118
350	PN 16	16 × M 24	152	165
350	PN 25	16 × M 30	227	252
400	PN 6	16 × M 20	90	98
400	PN 10	16 × M 24	151	167
400	PN 16	16 × M 27	193	215
400	PN 25	16 × M 33	289	326
450	PN 6	16 × M 20	112	126
450	PN 10	20 × M 24	153	133
450	PN 16	20 × M 27	198	196
450	PN 25	20 × M 33	256	253
500	PN 6	20 × M 20	119	123
500	PN 10	20 × M 24	155	171
500	PN 16	20 × M 30	275	300
500	PN 25	20 × M 33	317	360
600	PN 6	20 × M 24	139	147
600	PN 10	20 × M 27	206	219
600 *	PN 16	20 × M 33	415	443
600	PN 25	20 × M 36	431	516
700	PN 6	24 × M 24	148	139
700	PN 10	24 × M 27	246	246
700	PN 16	24 × M 33	278	318

Nominal diameter [mm]	EN (DIN) Pressure rating [bar]	Threaded fasteners	Max. tightening torque [Nm] Hard rubber	Polyurethane
700	PN 25	24 × M 39	449	507
800	PN 6	24 × M 27	206	182
800	PN 10	24 × M 30	331	316
800	PN 16	24 × M 36	369	385
800	PN 25	24 × M 45	664	721
900	PN 6	24 × M 27	230	637
900	PN 10	28 × M 30	316	307
900	PN 16	28 × M 36	353	398
900	PN 25	28 × M 45	690	716
1000	PN 6	28 × M 27	218	208
1000	PN 10	28 × M 33	402	405
1000	PN 16	28 × M 39	502	518
1000	PN 25	28 × M 52	970	971
1200	PN 6	32 × M 30	319	299
1200	PN 10	32 × M 36	564	568
1200	PN 16	32 × M 45	701	753
1400	PN 6	36 × M 33	430	398
1400	PN 10	36 × M 39	654	618
1400	PN 16	36 × M 45	729	762
1600	PN 6	40 × M 33	440	417
1600	PN 10	40 × M 45	946	893
1600	PN 16	40 × M 52	1007	1100
1800	PN 6	44 × M 36	547	521
1800	PN 10	44 × M 45	961	895
1800	PN 16	44 × M 52	1108	1003
2000	PN 6	48 × M 39	629	605
2000	PN 10	48 × M 45	1047	1092
2000	PN 16	48 × M 56	1324	1261
* Designed acc. to EN 1092-1 (not to DIN 2501)				

Promag W tightening torques for ANSI

Nominal diameter [mm]	[inch]	ANSI Pressure rating [lbs]	Threaded fasteners	Max. tightening torque Hard rubber [Nm]	[lbf · ft]	Polyurethane [Nm]	[lbf · ft]
25	1"	Class 150	4 × ½"	–	–	7	5
25	1"	Class 300	4 × 5/8"	–	–	8	6
40	1 ½"	Class 150	4 × ½"	–	–	10	7
40	1 ½"	Class 300	4 × ¾"	–	–	15	11
50	2"	Class 150	4 × 5/8"	–	–	22	16
50	2"	Class 300	8 × 5/8"	–	–	11	8
80	3"	Class 150	4 × 5/8"	60	44	43	32
80	3"	Class 300	8 × ¾"	38	28	26	19
100	4"	Class 150	8 × 5/8"	42	31	31	23
100	4"	Class 300	8 × ¾"	58	43	40	30
150	6"	Class 150	8 × ¾"	79	58	59	44
150	6"	Class 300	12 × ¾"	70	52	51	38
200	8"	Class 150	8 × ¾"	107	79	80	59
250	10"	Class 150	12 × 7/8"	101	74	75	55
300	12"	Class 150	12 × 7/8"	133	98	103	76
350	14"	Class 150	12 × 1"	135	100	158	117
400	16"	Class 150	16 × 1"	128	94	150	111
450	18"	Class 150	16 × 1 1/8"	204	150	234	173
500	20"	Class 150	20 × 1 1/8"	183	135	217	160
600	24"	Class 150	20 × 1 ¼"	268	198	307	226

Promag W tightening torques for JIS

Nominal diameter [mm]	JIS Pressure rating	Threaded fasteners	Max. tightening torque [Nm] Hard rubber	Polyurethane
25	10K	4 × M 16	–	19
25	20K	4 × M 16	–	19
32	10K	4 × M 16	–	22
32	20K	4 × M 16	–	22
40	10K	4 × M 16	–	24
40	20K	4 × M 16	–	24
50	10K	4 × M 16	–	33
50	20K	8 × M 16	–	17
65	10K	4 × M 16	55	45
65	20K	8 × M 16	28	23
80	10K	8 × M 16	29	23
80	20K	8 × M 20	42	35
100	10K	8 × M 16	35	29
100	20K	8 × M 20	56	48
125	10K	8 × M 20	60	51
125	20K	8 × M 22	91	79
150	10K	8 × M 20	75	63
150	20K	12 × M 22	81	72
200	10K	12 × M 20	61	52
200	20K	12 × M 22	91	80
250	10K	12 × M 22	100	87
250	20K	12 × M 24	159	144
300	10K	16 × M 22	74	63
300	20K	16 × M 24	138	124

Promag W tightening torques for AWWA

Nominal diameter		AWWA		Max. tightening torque			
				Hard rubber		Polyurethane	
[mm]	[inch]	Pressure rating	Threaded fasteners	[Nm]	[lbf · ft]	[Nm]	[lbf · ft]
700	28"	Class D	28 × 1 ¼"	247	182	292	215
750	30"	Class D	28 × 1 ¼"	287	212	302	223
800	32"	Class D	28 × 1 ½"	394	291	422	311
900	36"	Class D	32 × 1 ½"	419	309	430	317
1000	40"	Class D	36 × 1 ½"	420	310	477	352
1050	42"	Class D	36 × 1 ½"	528	389	518	382
1200	48"	Class D	44 × 1 ½"	552	407	531	392
1350	54"	Class D	44 × 1 ¾"	730	538	633	467
1500	60"	Class D	52 × 1 ¾"	758	559	832	614
1650	66"	Class D	52 × 1 ¾"	946	698	955	704
1800	72"	Class D	60 × 1 ¾"	975	719	1087	802
2000	78"	Class D	64 × 2"	853	629	786	580

Promag W tightening torques for AS 2129

Nominal diameter [mm]	AS 2129 Pressure rating	Threaded fasteners	Max. tightening torque [Nm] Hard rubber
80	Table E	4 × M 16	49
100	Table E	8 × M 16	38
150	Table E	8 × M 20	64
200	Table E	8 × M 20	96
250	Table E	12 × M 20	98
300	Table E	12 × M 24	123
350	Table E	12 × M 24	203
400	Table E	12 × M 24	226
450	Table E	16 × M 24	226
500	Table E	16 × M 24	271
600	Table E	16 × M 30	439
700	Table E	20 × M 30	355
750	Table E	20 × M 30	559
800	Table E	20 × M 30	631
900	Table E	24 × M 30	627
1000	Table E	24 × M 30	634
1200	Table E	32 × M 30	727

Promag W tightening torques for AS 4087

Nominal diameter [mm]	AS 4087 Pressure rating	Threaded fasteners	Max. tightening torque [Nm] Hard rubber
80	PN 16	4 × M 16	49
100	PN 16	4 × M 16	76
150	PN 16	8 × M 20	52
200	PN 16	8 × M 20	77
250	PN 16	8 × M 20	147
300	PN 16	12 × M 24	103
350	PN 16	12 × M 24	203
375	PN 16	12 × M 24	137
400	PN 16	12 × M 24	226
450	PN 16	12 × M 24	301
500	PN 16	16 × M 24	271
600	PN 16	16 × M 27	393
700	PN 16	20 × M 27	330
750	PN 16	20 × M 30	529
800	PN 16	20 × M 33	631
900	PN 16	24 × M 33	627
1000	PN 16	24 × M 33	595
1200	PN 16	32 × M 33	703

3.3.4 Installing the Promag P sensor

Caution!
- The protective covers mounted on the two sensor flanges guard the PTFE, which is turned over the flanges. Consequently, do not remove these covers until **immediately before** the sensor is installed in the pipe.
- The covers must remain in place while the device is in storage.
- Make sure that the lining is not damaged or removed from the flanges.

Note!
Bolts, nuts, seals, etc. are not included in the scope of supply and must be supplied by the customer.

The sensor is designed for installation between the two piping flanges.
- Observe in any case the necessary screw tightening torques on → 32
- If grounding disks are used, follow the mounting instructions which will be enclosed with the shipment

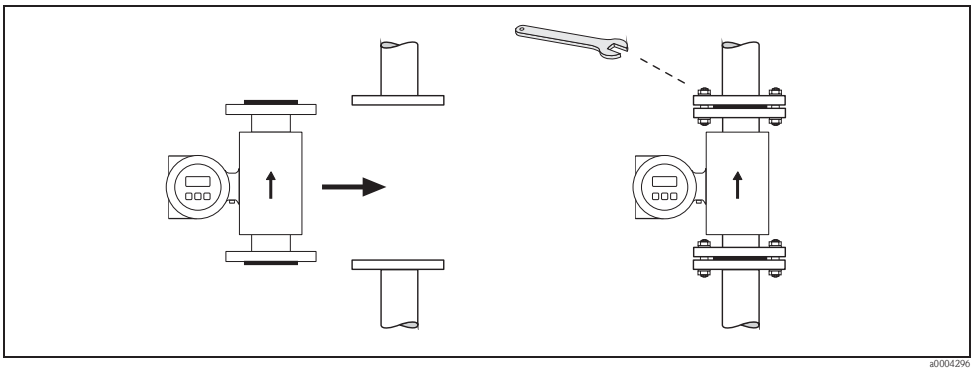

Fig. 20: Installing the Promag P sensor

Seals

Comply with the following instructions when installing seals:
- PFA or PTFE lining → **No** seals are required!
- For DIN flanges, use only seals according to EN 1514-1.
- Make sure that the seals do not protrude into the piping cross-section.

Caution!
Risk of short circuit! Do not use electrically conductive sealing compounds such as graphite! An electrically conductive layer could form on the inside of the measuring tube and short-circuit the measuring signal.

Ground cable

- If necessary, special ground cables for potential equalization can be ordered as an accessory (→ 77).
- Information on potential equalization and detailed mounting instructions for the use of ground cables can be found on → 55

Installing the high-temperature version (with PFA lining)

The high-temperature version has a housing support for the thermal separation of sensor and transmitter. The high-temperature version is always used for applications in which high ambient temperatures are encountered **in conjunction with** high fluid temperatures. The high-temperature version is obligatory if the fluid temperature exceeds +150 °C.

Note!
You will find information on permissible temperature ranges on → 102

Insulation

Pipes generally have to be insulated if they carry very hot fluids, in order to avoid energy losses and to prevent accidental contact with pipes at temperatures that could cause injury. Guidelines regulating the insulation of pipes have to be taken into account.

Caution!
Risk of measuring electronics overheating. The housing support dissipates heat and its entire surface area must remain uncovered. Make sure that the sensor insulation does not extend past the top of the two sensor shells.

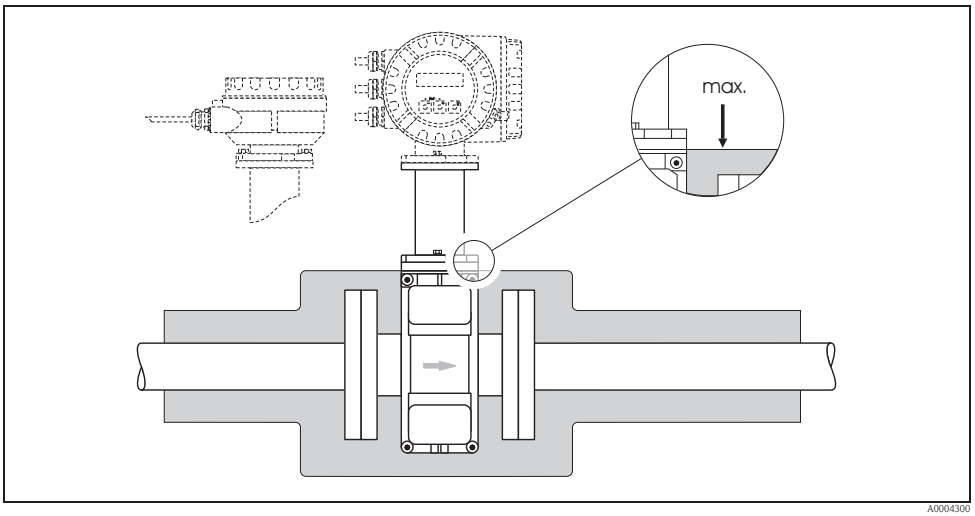

Fig. 21: Promag P (high-temperature version): Insulating the pipe

Tightening torques for threaded fasteners (Promag P)

Please note the following:
- The tightening torques listed below are for lubricated threads only.
- Always tighten the screws uniformly and in diagonally opposite sequence.
- Overtightening the screws will deform the sealing faces or damage the seals.
- The tightening torques listed below apply only to pipes not subjected to tensile stress.

Tightening torques for:
- EN (DIN) → 33
- ANSI → 34
- JIS → 34
- AS 2129 → 35
- AS 4087 → 35

Promag P tightening torques for EN (DIN)

Nominal diameter [mm]	EN (DIN) Pressure rating [bar]	Threaded fasteners	Max. tightening torque [Nm]	
			PTFE	PFA
15	PN 40	4 × M 12	11	–
25	PN 40	4 × M 12	26	20
32	PN 40	4 × M 16	41	35
40	PN 40	4 × M 16	52	47
50	PN 40	4 × M 16	65	59
65 *	PN 16	8 × M 16	43	40
65	PN 40	8 × M 16	43	40
80	PN 16	8 × M 16	53	48
80	PN 40	8 × M 16	53	48
100	PN 16	8 × M 16	57	51
100	PN 40	8 × M 20	78	70
125	PN 16	8 × M 16	75	67
125	PN 40	8 × M 24	111	99
150	PN 16	8 × M 20	99	85
150	PN 40	8 × M 24	136	120
200	PN 10	8 × M 20	141	101
200	PN 16	12 × M 20	94	67
200	PN 25	12 × M 24	138	105
250	PN 10	12 × M 20	110	–
250	PN 16	12 × M 24	131	–
250	PN 25	12 × M 27	200	–
300	PN 10	12 × M 20	125	–
300	PN 16	12 × M 24	179	–
300	PN 25	16 × M 27	204	–
350	PN 10	16 × M 20	188	–
350	PN 16	16 × M 24	254	–
350	PN 25	16 × M 30	380	–
400	PN 10	16 × M 24	260	–
400	PN 16	16 × M 27	330	–
400	PN 25	16 × M 33	488	–
450	PN 10	20 × M 24	235	–
450	PN 16	20 × M 27	300	–
450	PN 25	20 × M 33	385	–
500	PN 10	20 × M 24	265	–
500	PN 16	20 × M 30	448	–
500	PN 25	20 × M 33	533	–
600	PN 10	20 × M 27	345	–
600 *	PN 16	20 × M 33	658	–
600	PN 25	20 × M 36	731	–

* Designed acc. to EN 1092-1 (not to DIN 2501)

Promag P tightening torques for ANSI

Nominal diameter		ANSI		Max. tightening torque			
				PTFE		PFA	
[mm]	[inch]	Pressure rating [lbs]	Threaded fasteners	[Nm]	[lbf · ft]	[Nm]	[lbf · ft]
15	½"	Class 150	4 × ½"	6	4	–	–
15	½"	Class 300	4 × ½"	6	4	–	–
25	1"	Class 150	4 × ½"	11	8	10	7
25	1"	Class 300	4 × 5/8"	14	10	12	9
40	1 ½"	Class 150	4 × ½"	24	18	21	15
40	1 ½"	Class 300	4 × ¾"	34	25	31	23
50	2"	Class 150	4 × 5/8"	47	35	44	32
50	2"	Class 300	8 × 5/8"	23	17	22	16
80	3"	Class 150	4 × 5/8"	79	58	67	49
80	3"	Class 300	8 × ¾"	47	35	42	31
100	4"	Class 150	8 × 5/8"	56	41	50	37
100	4"	Class 300	8 × ¾"	67	49	59	44
150	6"	Class 150	8 × ¾"	106	78	86	63
150	6"	Class 300	12 × ¾"	73	54	67	49
200	8"	Class 150	8 × ¾"	143	105	109	80
250	10"	Class 150	12 × 7/8"	135	100	–	–
300	12"	Class 150	12 × 7/8"	178	131	–	–
350	14"	Class 150	12 × 1"	260	192	–	–
400	16"	Class 150	16 × 1"	246	181	–	–
450	18"	Class 150	16 × 1 1/8"	371	274	–	–
500	20"	Class 150	20 × 1 1/8"	341	252	–	–
600	24"	Class 150	20 × 1 ¼"	477	352	–	–

Promag P tightening torques for JIS

Nominal diameter	JIS		Max. tightening torque [Nm]	
[mm]	Pressure rating	Threaded fasteners	PTFE	PFA
25	10K	4 × M 16	32	27
25	20K	4 × M 16	32	27
32	10K	4 × M 16	38	–
32	20K	4 × M 16	38	–
40	10K	4 × M 16	41	37
40	20K	4 × M 16	41	37
50	10K	4 × M 16	54	46
50	20K	8 × M 16	27	23
65	10K	4 × M 16	74	63
65	20K	8 × M 16	37	31
80	10K	8 × M 16	38	32
80	20K	8 × M 20	57	46
100	10K	8 × M 16	47	38
100	20K	8 × M 20	75	58
125	10K	8 × M 20	80	66
125	20K	8 × M 22	121	103
150	10K	8 × M 20	99	81
150	20K	12 × M 22	108	72
200	10K	12 × M 20	82	54
200	20K	12 × M 22	121	88
250	10K	12 × M 22	133	–
250	20K	12 × M 24	212	–
300	10K	16 × M 22	99	–
300	20K	16 × M 24	183	–

Promag P tightening torques for AS 2129

Nominal diameter [mm]	AS 2129 Pressure rating	Threaded fasteners	Max. tightening torque [Nm] PTFE
25	Table E	4 × M 12	21
50	Table E	4 × M 16	42

Promag P tightening torques for AS 4087

Nominal diameter [mm]	AS 4087 Pressure rating	Threaded fasteners	Max. tightening torque [Nm] PTFE
50	PN 16	4 × M 16	42

3.3.5 Installing the Promag H sensor

The sensor is supplied to order, with or without pre-installed process connections. Pre-installed process connections are secured to the sensor with 4 or 6 hex-head threaded fasteners.

Caution!
The sensor might require support or additional attachments, depending on the application and the length of the piping run. When plastic process connections are used, the sensor must be additionally supported mechanically. A wall-mounting kit can be ordered separately from Endress+Hauser as an accessory (→ 77).

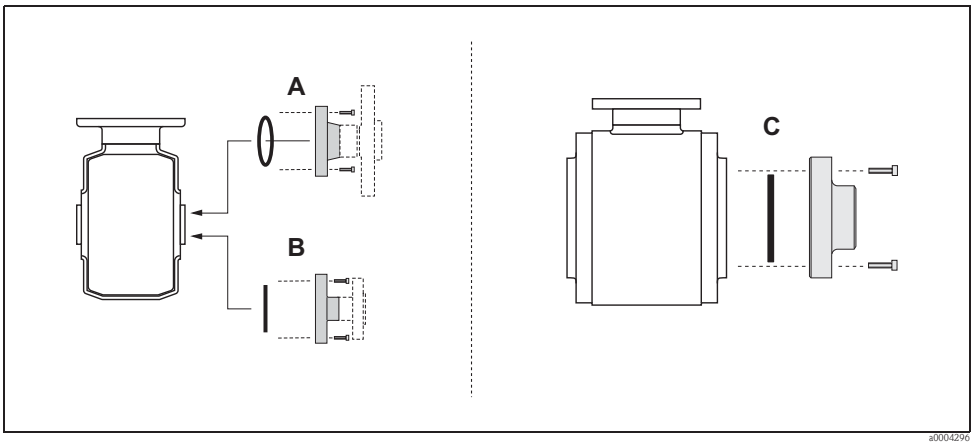

Abb. 22: Promag H process connections (DN 2…25 / DN 40…100, 1/12"…1" / DN 1½"…4")

A = DN 2…25, 1/12"…1"/ process connections with O-ring
- *welding flanges (DIN EN ISO 1127, ODT / SMS),*
- *flange (EN (DIN), ANSI, JIS), flange PVDF (EN (DIN), ANSI, JIS)*
- *external and internal thread, hose connection, PVC adhesive fitting*

B = DN 2…25, 1/12"…1"/ process connections with aseptic gasket vseal
- *weld nipples (DIN 11850, ODT/SMS)*
- *Clamp (ISO 2852, DIN 32676, L14 AM7)*
- *coupling (DIN 11851, DIN 11864-1, SMS 1145)*
- *flange DIN 11864-2*

C = DN 40…100, 1½…4"/ process connections with aseptic gasket seal
- *weld nipples (DIN 11850, ODT/SMS)*
- *Clamp (ISO 2852, DIN 32676, L14 AM7)*
- *coupling (DIN 11851, DIN 11864-1, ISO 2853, SMS 1145)*
- *flange DIN 11864-2*

Seals

When installing the process connections, make sure that the seals are clean and correctly centered.

Caution!
- With metal process connections, you must fully tighten the screws. The process connection forms a metallic connection with the sensor, which ensures a defined compression of the seal.
- With plastic process connections, note the max. torques for lubricated threads (7 Nm / 5.2 lbf ft). With plastic flanges, always use seals between connection and counter flange.
- The seals must be replaced periodically, depending on the application, particularly in the case of gasket seals (aseptic version)!
  The period between changes depends on the frequency of cleaning cycles, the cleaning temperature and the fluid temperature. Replacement seals can be ordered as accessories → 77.

Usage and assembly of ground rings (DN 2 to 25, 1/12" to 1")

In case the process connections are made of plastic (e.g. flanges or adhesive fittings), the potential between the sensor and the fluid must be equalized using additional ground rings.
If the ground rings are not installed this can affect the accuracy of the measurements or cause the destruction of the sensor through the electrochemical erosion of the electrodes.

Caution!

- Depending on the option ordered, plastic disks may be installed at the process connections instead of ground rings. These plastic disks serve only as spacers and have no potential equalization function. In addition, they provide a sealing function at the interface between the sensor and process connection. For this reason, with process connections without ground rings, these plastic disks/seals must not be removed, or must always be installed.
- Ground rings can be ordered separately from Endress+Hauser as accessories (→ 77). When placing the order, make certain that the ground ring is compatible with the material used for the electrodes. Otherwise, there is a risk that the electrodes may be destroyed by electrochemical corrosion! Information about the materials can be found on → 112.
- Ground rings, including the seals, are mounted within the process connections. Therefore, the fitting length is not affected.

1. Loosen the four or six hexagonal headed bolts (1) and remove the process connection from the sensor (4).
2. Remove the plastic disk (3), including the two O-ring seals (2).
3. Place one seal (2) in the groove of the process connection.
4. Place the metal ground ring (3) on the process connection.
5. Now place the second seal (2) in the groove of the ground ring.
6. Finally, mount the process connection on the sensor again.
   With plastic process connections, note the max. torques for lubricated threads (7 Nm / 5.2 lbf ft).

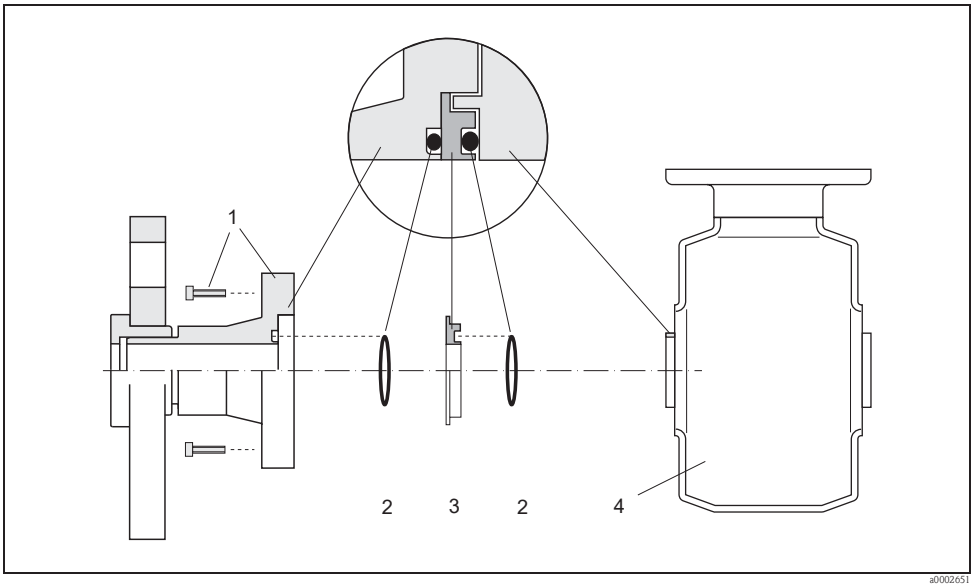

Fig. 23: Installing ground rings with Promag H (DN 2 to 25, 1/12" to 1")

1 = Hexagonal-headed bolt (process connection)
2 = O-ring seals
3 = Ground ring or plastic disk (spacer)
4 = Sensor

Welding the transmitter into the piping (weld nipples)

Caution!
Risk of destroying the measuring electronics. Make sure that the welding machine is *not* grounded via the sensor or the transmitter.

1. Tack-weld the sensor into the pipe. A suitable welding jig can be ordered separately as an accessory (→ 77).
2. Loosen the screws on the process connection flange and remove the sensor, complete with the seal, from the pipe.
3. Weld the process connection to the pipe.
4. Reinstall the sensor in the pipe. Make sure that everything is clean and that the seal is correctly seated.

Note!
- If thin-walled foodstuffs pipes are not welded correctly, the heat could damage the installed seal. It is therefore advisable to remove the sensor and the seal prior to welding.
- The pipe has to be spread approximately 8 mm to permit disassembly.

Cleaning with pigs

If pigs are used for cleaning, it is essential to take the inside diameters of the measuring tube and process connection into account. All the dimensions and lengths of the sensor and transmitter are provided in the separate documentation "Technical Documentation" → 116.

3.3.6 Turning the transmitter housing

Turning the aluminum field housing

Warning!
The turning mechanism in devices with Ex d/de or FM/CSA Cl. I Div. 1 classification is not the same as that described here. The procedure for turning these housings is described in the Ex-specific documentation.

1. Loosen the two securing screws.
2. Turn the bayonet catch as far as it will go.
3. Carefully lift the transmitter housing:
   – Promag D: approx. 10 mm (0.39 inch) above the securing screws
   – Promag L, W, P, H: to the stop
4. Turn the transmitter housing to the desired position:
   – Promag D: max. 180° clockwise or max. 180° counterclockwise
   – Promag L, W, P, H: max. 280° clockwise or max. 20° counterclockwise
5. Lower the housing into position and re-engage the bayonet catch.
6. Retighten the two securing screws.

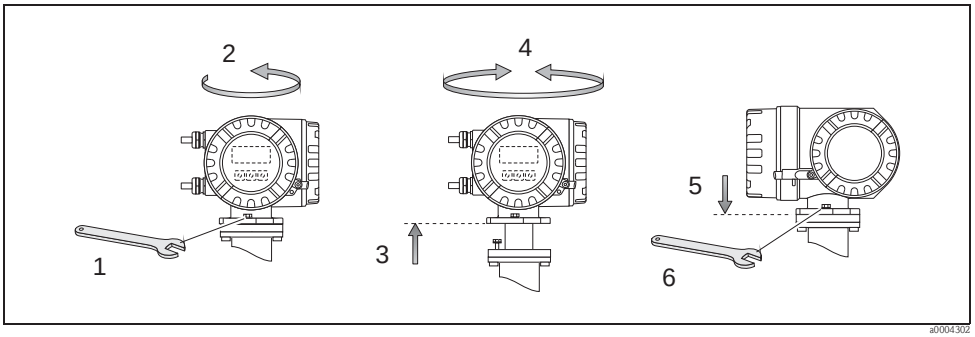

Fig. 24: Turning the transmitter housing (aluminum field housing)

Turning the stainless-steel field housing

1. Loosen the two securing screws.
2. Carefully lift the transmitter housing as far as it will go.
3. Turn the transmitter housing to the desired position (max. 2 × 90° in either direction).
4. Lower the housing into position.
5. Retighten the two securing screws.

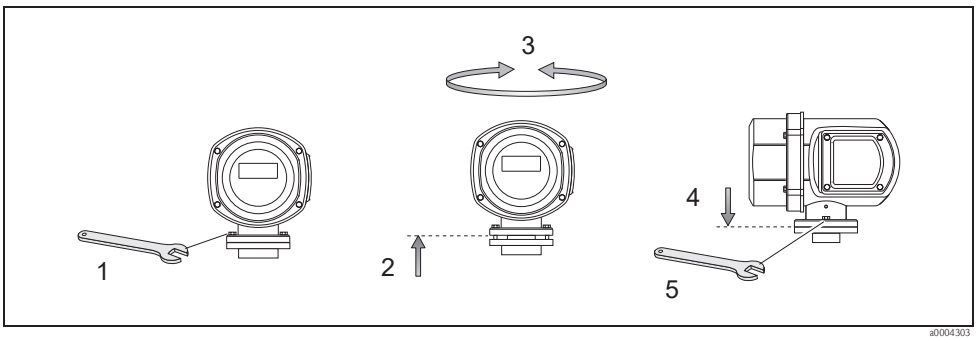

Fig. 25: Turning the transmitter housing (stainless-steel field housing)

3.3.7 Turning the onsite display

1. Unscrew the cover of the electronics compartment from the transmitter housing.
2. Press the side latches on the display module and remove it from the electronics compartment cover plate.
3. Turn the display to the desired position (max. 4 × 45° in both directions) and reset it onto the cover plate of the electronics compartment.
4. Screw the cover of the electronics compartment firmly back onto the transmitter housing.

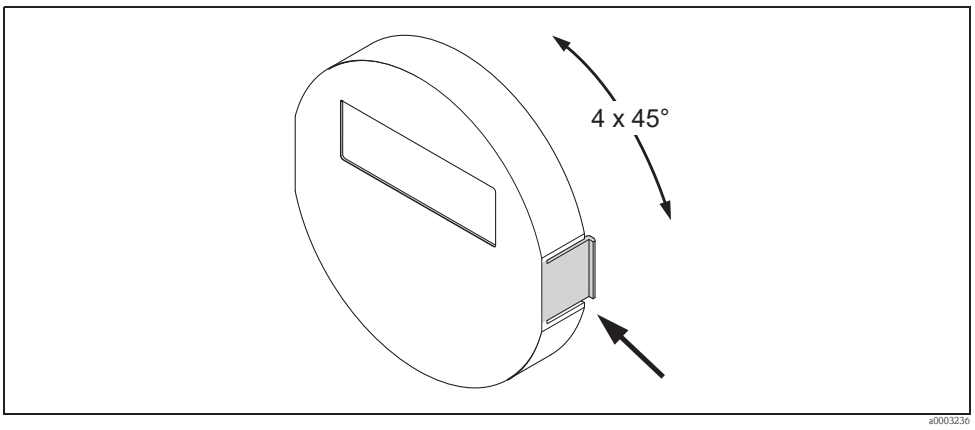

Fig. 26: Turning the local display (field housing)

3.3.8 Installing the wall-mount housing

There are various ways of installing the wall-mount transmitter housing:

- Direct wall mounting
- Installation in control panel (with separate mounting kit, accessories) → 42
- Pipe mounting (with separate mounting kit, accessories) → 42

Caution!
- Make sure that the ambient temperature does not exceed the permissible range at the mounting location, –20 to +60 °C (–4 to + °140 F), optional –40 to +60 °C (–40 to +140 °F). Install the device at a shady location. Avoid direct sunlight.
- Always install the wall-mount housing in such a way that the cable entries are pointing down.

Direct wall mounting

1. Drill the holes as illustrated in the graphic.
2. Remove the cover of the connection compartment (a).
3. Push the two securing screws (b) through the appropriate bores (c) in the housing.
   – Securing screws (M6): max. Ø 6.5 mm (0.26")
   – Screw head: max. Ø 10.5 mm (0.41")
4. Secure the transmitter housing to the wall as indicated.
5. Screw the cover of the connection compartment (a) firmly onto the housing.

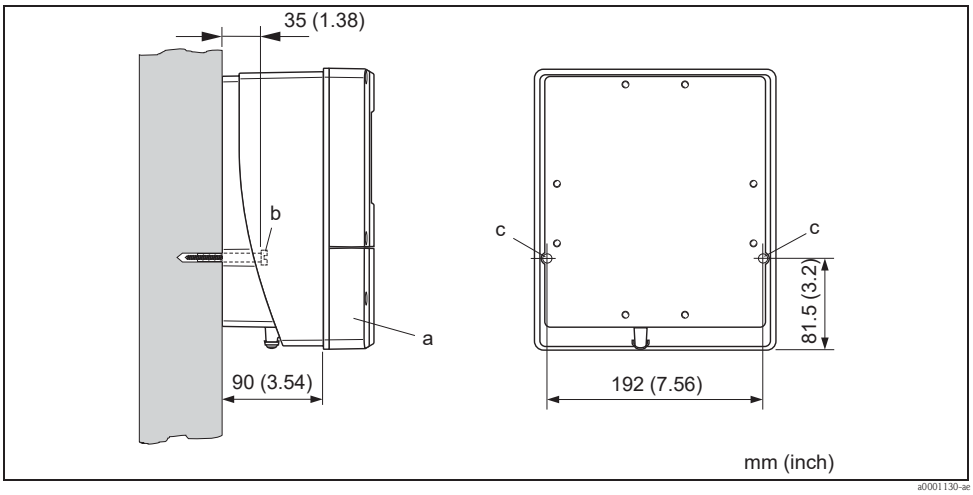

Fig. 27: Mounted directly on the wall

Panel-mounted installation

1. Prepare the opening in the panel as illustrated in the graphic.
2. Slide the housing into the opening in the panel from the front.
3. Screw the fasteners onto the wall-mount housing.
4. Place the threaded rods in the fasteners and screw them down until the housing is seated tightly against the panel. Afterwards, tighten the locking nuts. Additional support is not necessary.

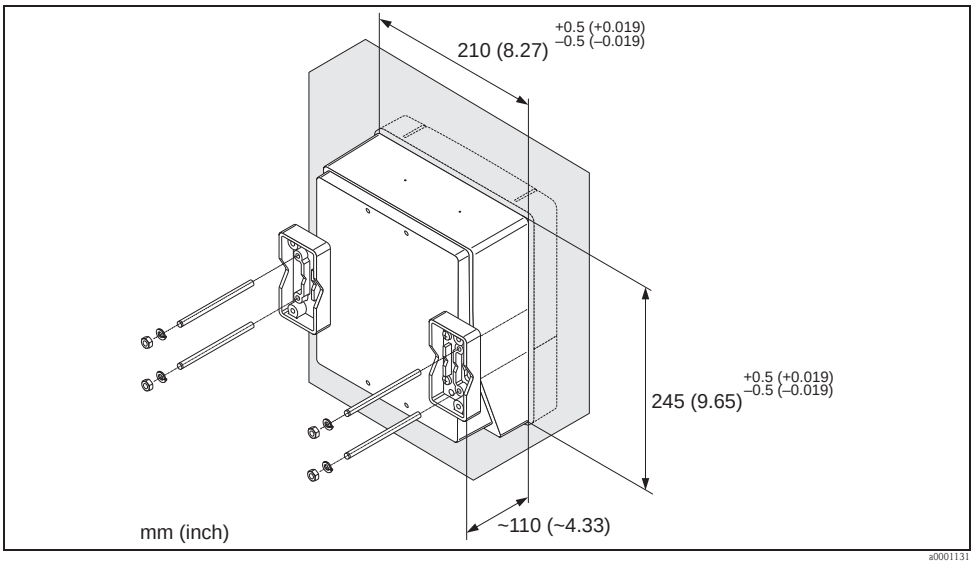

Fig. 28: Panel installation (wall-mount housing)

Pipe mounting

The assembly should be performed by following the instructions in the graphic.

Caution!
If the device is mounted to a warm pipe, make certain that the housing temperature does not exceed +60 °C (+140 °F), which is the maximum permissible temperature.

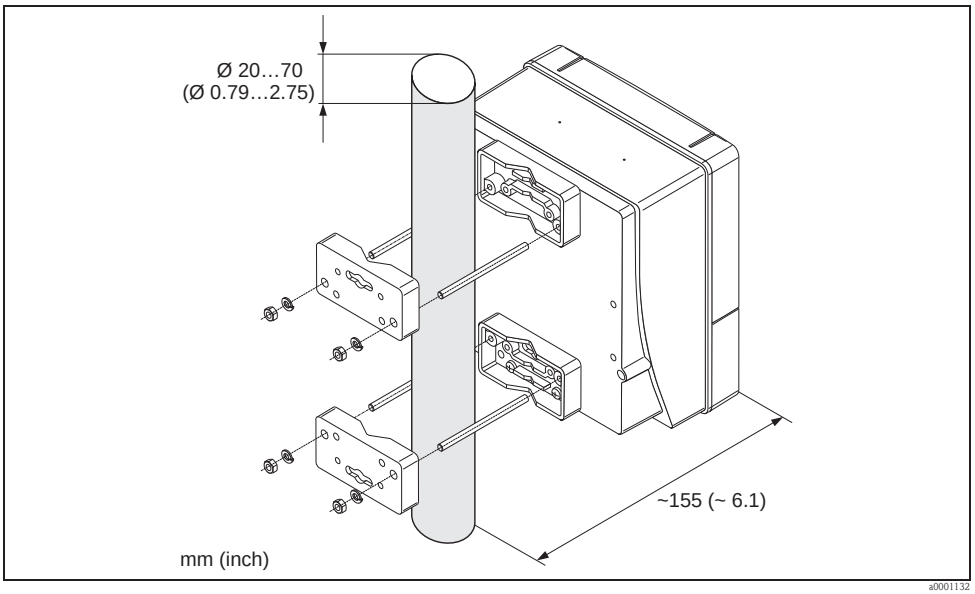

Fig. 29: Pipe mounting (wall-mount housing)

3.4 Post-installation check

Perform the following checks after installing the measuring device in the pipe:

Device condition and specifications	Notes
Is the device damaged (visual inspection)?	–
Does the device correspond to specifications at the measuring point, including process temperature and pressure, ambient temperature, minimum fluid conductivity, measuring range, etc.?	→ 🗎 100
Installation	**Notes**
Does the arrow on the sensor nameplate match the actual direction of flow through the pipe?	–
Is the position of the measuring electrode plane correct?	→ 🗎 15
Is the position of the empty pipe detection electrode correct?	→ 🗎 15
Were all screws tightened to the specified torques when the sensor was installed?	Promag D → 🗎 23 Promag L → 🗎 25 Promag W → 🗎 26 Promag P → 🗎 32
Were the correct seals used (type, material, installation)?	Promag D → 🗎 21 Promag L→ 🗎 24 Promag W → 🗎 26 Promag P → 🗎 31 Promag H → 🗎 36
Are the measuring point number and labeling correct (visual inspection)?	–
Process environment / process conditions	**Notes**
Were the inlet and outlet runs respected?	Inlet run ≥ 5 × DN Outlet run ≥ 2 × DN
Is the measuring device protected against moisture and direct sunlight?	–
Is the sensor adequately protected against vibration (attachment, support)?	Acceleration up to 2 g by analogy with IEC 600 68-2-8

4 Wiring

Warning!
When connecting Ex-certified devices, see the notes and diagrams in the Ex-specific supplement to these Operating Instructions.
Please do not hesitate to contact your Endress+Hauser representative if you have any questions.

Note!
The device does not have an internal circuit breaker. For this reason, assign the device a switch or power-breaker switch capable of disconnecting the power supply line from the mains.

4.1 Connecting the remote version

4.1.1 Connecting Promag D, L, W, P, H

Warning!
- Risk of electric shock! Switch off the power supply before opening the device. Do **not** install or wire the device while it is connected to the power supply. Failure to comply with this precaution can result in irreparable damage to the electronics.
- Risk of electric shock! Connect the protective conductor to the ground terminal on the housing before the power supply is applied.

Caution!
- Only sensors and transmitters with the same serial number can be connected to one another. Communication problems can occur if the devices are not connected in this way.
- Risk of damaging the coil driver. Always switch off the power supply before connecting or disconnecting the coil cable.

Procedure

1. Transmitter: Remove the cover from the connection compartment (a).
2. Sensor: Remove the cover from the connection housing (b).
3. Feed the signal cable (c) and the coil cable (d) through the appropriate cable entries.

   Caution!
   Route the connecting cables securely (see "Connecting cable length" → 44).
4. Terminate the signal and coil current cable as indicated in the table:
   Promag D, L, W, P → Refer to the table → 47
   Promag H → Refer to the "Cable termination" table → 48
5. Establish the wiring between the sensor and the transmitter.
   The electrical wiring diagram that applies to your device can be found:
   - In the corresponding graphic:
     → 30 (Promag D) → 31 (Promag L, W, P); → 32 (Promag H)
   - In the cover of the sensor and transmitter

   Note!
   The cable shields of the Promag H sensor are grounded by means of the strain relief terminals (see also the "Cable termination" table → 48)

   Caution!
   Insulate the shields of cables that are not connected to eliminate the risk of short-circuits with neighboring cable shields inside the connection housing.
6. Transmitter: Screw the cover on the connection compartment (a).
7. Sensor: Secure the cover on the connection housing (b).

Promag D

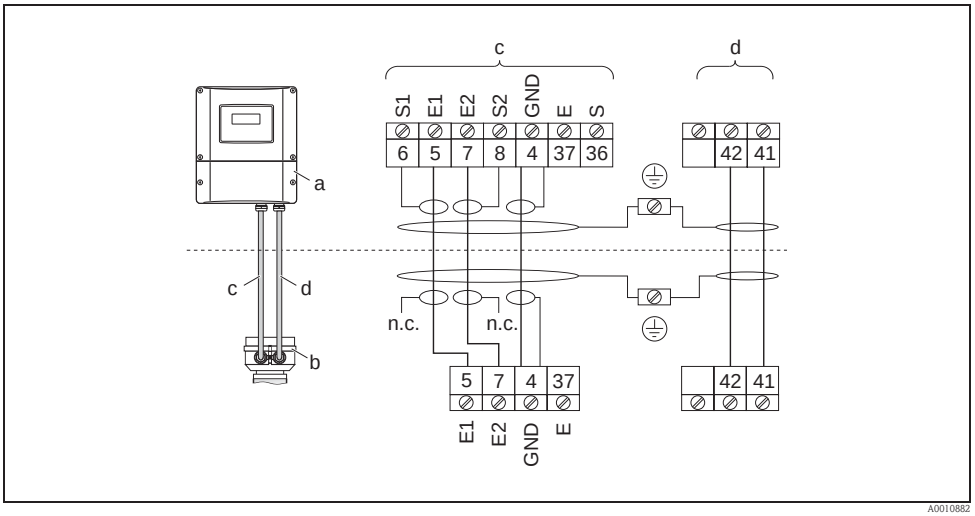

Fig. 30: Connecting the remote version of Promag D

a Wall-mount housing connection compartment
b Cover of the sensor connection housing
c Signal cable
d Coil current cable
n.c. Not connected, insulated cable shields

Wire colors/Terminal No.:
5/6 = braun, 7/8 = white, 4 = green, 37/36 = yellow

Promag L, W, P

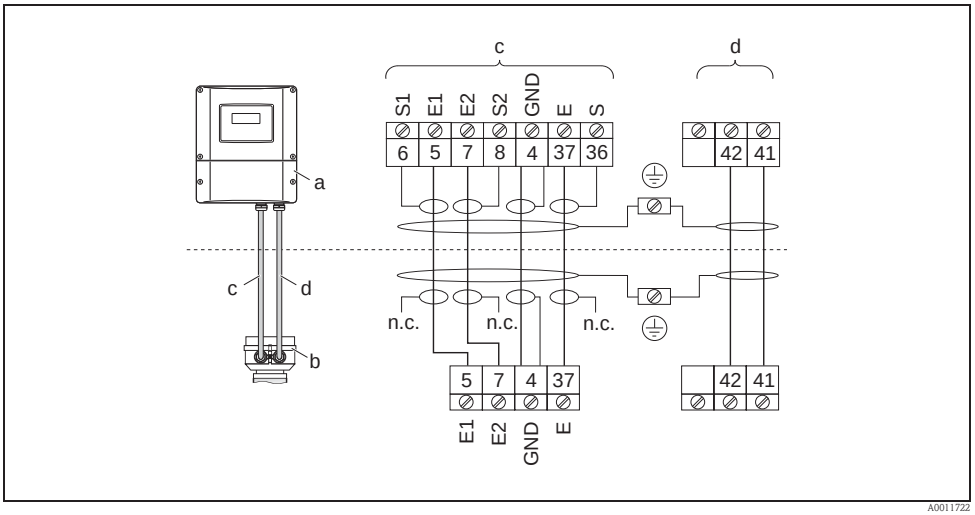

Fig. 31: Connecting the remote version of Promag L, W, P

a Wall-mount housing connection compartment
b Cover of the sensor connection housing
c Signal cable
d Coil current cable
n.c. Not connected, insulated cable shields

Wire colors/Terminal No.:
5/6 = braun, 7/8 = white, 4 = green, 37/36 = yellow

Promag H

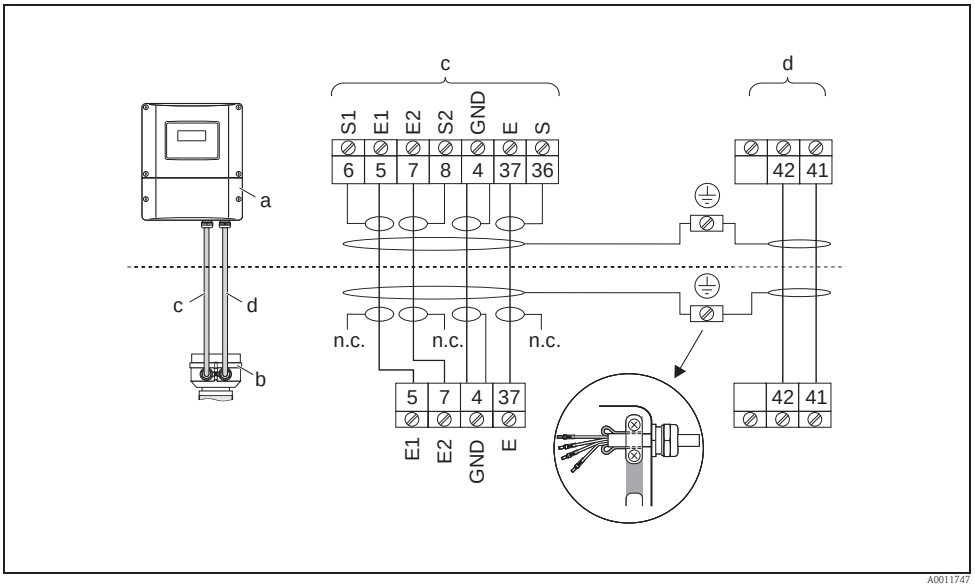

Fig. 32: Connecting the remote version of Promag H

a Wall-mount housing connection compartment
b Cover of the sensor connection housing
c Signal cable
d Coil current cable
n.c. Not connected, insulated cable shields

Wire colors/Terminal No.:
5/6 = braun, 7/8 = white, 4 = green, 37/36 = yellow

Cable termination for the remote version
Promag D / Promag L / Promag W / Promag P

Terminate the signal and coil current cables as shown in the figure below (Detail A).
Ferrules must be provided on the fine-wire cores (Detail B: ① = red ferrules, ∅ 1.0 mm; ② = white ferrules, ∅ 0.5 mm).
* Stripping only for reinforced cables

Caution!
When fitting the connectors, pay attention to the following points:
- *Signal cable* → Make sure that the ferrules do not touch the wire shield on the sensor side.
  Minimum distance = 1 mm (exception "GND" = green cable)
- *Coil current cable* → Insulate one core of the three-core wire at the level of the core reinforcement; you only require two cores for the connection.

TRANSMITTER

Signal cable

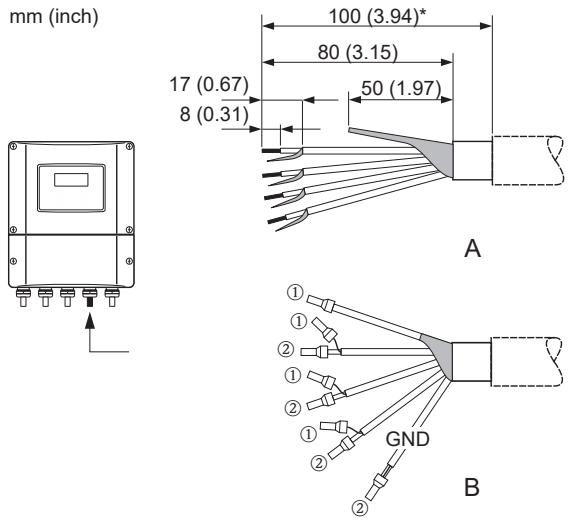

Coil current cable

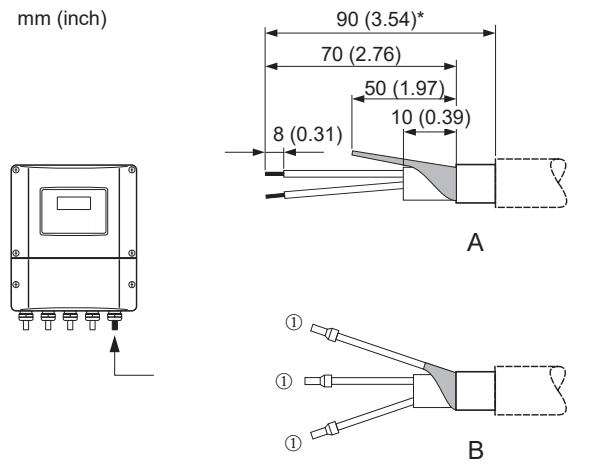

SENSOR

Signal cable

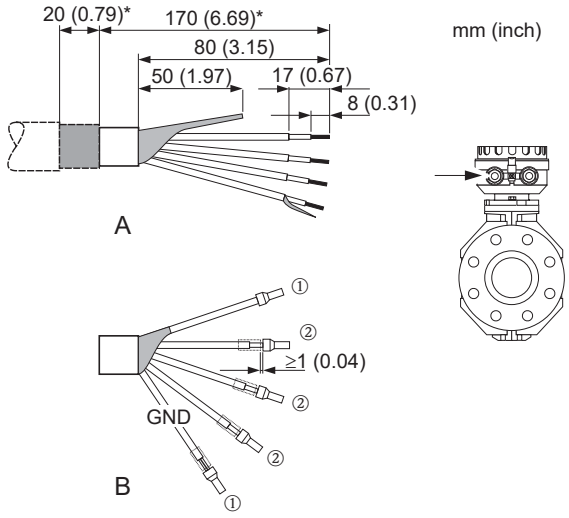

Coil current cable

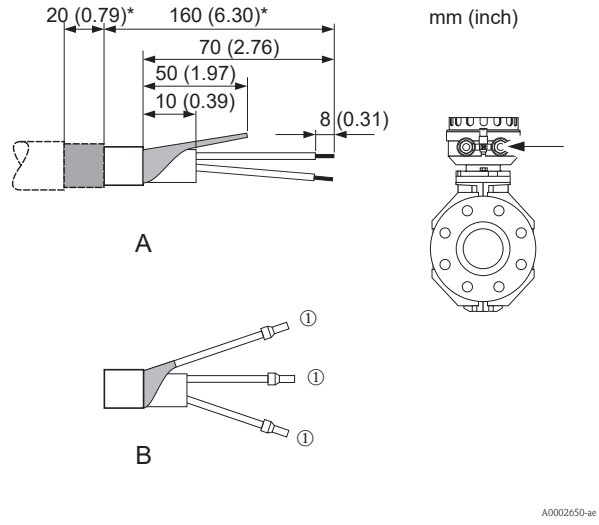

Cable termination for the remote version
Promag H

Terminate the signal and coil current cables as shown in the figure below (Detail A).
Ferrules must be provided on the fine-wire cores (Detail B: ① = red ferrules, ∅ 1.0 mm; ② = white ferrules, ∅ 0.5 mm).

Caution!
When fitting the connectors, pay attention to the following points:
- *Signal cable* → Make sure that the ferrules do not touch the wire shield on the sensor side.
  Minimum distance = 1 mm (exception "GND" = green cable).
- *Coil current cable* → Insulate one core of the three-core wire at the level of the core reinforcement; you only require two cores for the connection.
- On the sensor side, reverse both cable shields approx. 15 mm over the outer jacket. The strain relief ensures an electrical connection with the connection housing.

TRANSMITTER

Signal cable

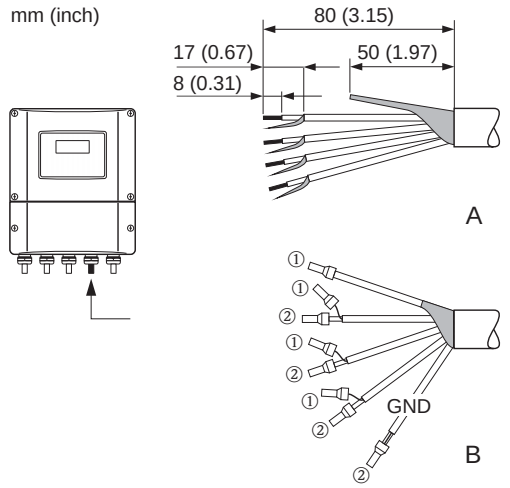

Coil current cable

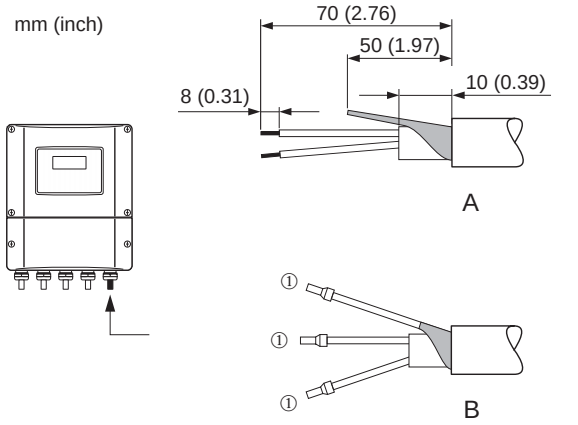

SENSOR

Signal cable

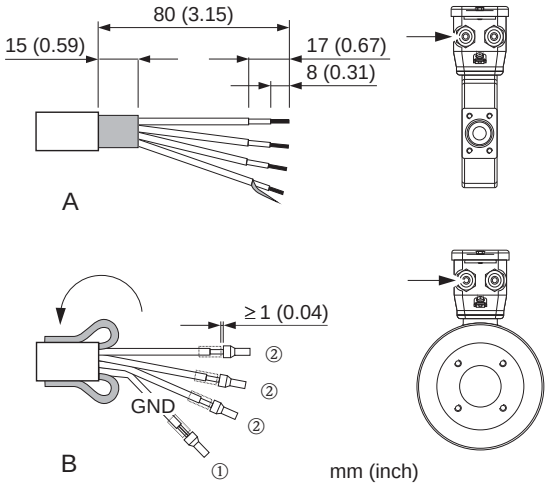

Coil current cable

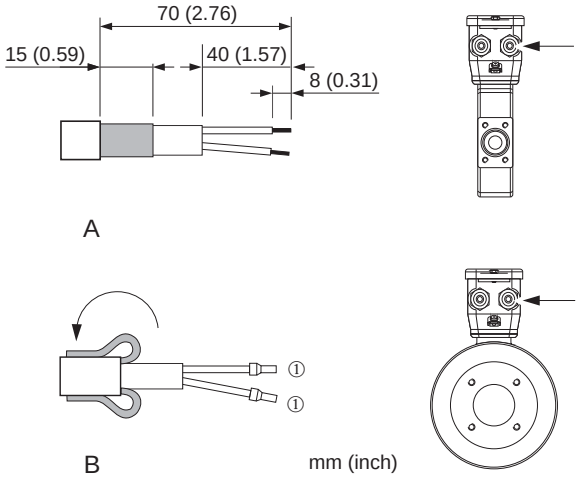

4.1.2 Cable specifications

Signal cable

- 3 × 0.38 mm² PVC cable with common, braided copper shield (∅ ~7 mm) and individually shielded cores
- With Empty Pipe Detection (EPD): 4 × 0.38 mm² PVC cable with common, braided copper shield (∅ ~ 7 mm) and individually shielded cores
- Conductor resistance: ≤ 50 Ω/km
- Capacitance: core/shield: ≤ 420 pF/m
- Permanent operating temperature: –20 to +80 °C
- Cable cross-section: max. 2.5 mm²

Coil cable

- 2 × 0.75 mm² PVC cable with common, braided copper shield (∅ ~ 7 mm)
- Conductor resistance: ≤ 37 Ω/km
- Capacitance: core/core, shield grounded: ≤ 120 pF/m
- Operating temperature: –20 to +80 °C
- Cable cross-section: max. 2.5 mm²
- Test voltage for cable insulation: ≥1433 V AC r.m.s. 50/60 Hz or ≥2026 V DC

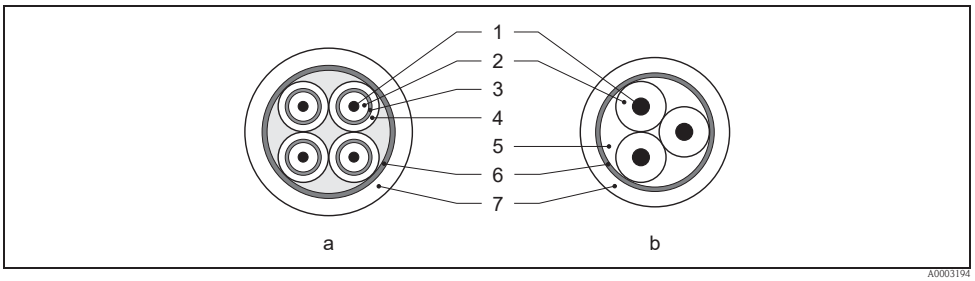

Fig. 33: Cable cross-section

a Signal cable
b Coil current cable

1 Core
2 Core insulation
3 Core shield
4 Core jacket
5 Core reinforcement
6 Cable shield
7 Outer jacket

Reinforced connecting cables

As an option, Endress+Hauser can also deliver reinforced connecting cables with an additional, reinforcing metal braid. Reinforced connecting cables should be used when laying the cable directly in the ground, if there is a risk of damage from rodents or if using the measuring device below IP 68 degree of protection.

Operation in zones of severe electrical interference:

The measuring device complies with the general safety requirements in accordance with EN 61010 and the EMC requirements of IEC/EN 61326.

Caution!
Grounding is by means of the ground terminals provided for the purpose inside the connection housing. Ensure that the stripped and twisted lengths of cable shield to the ground terminal are as short as possible.

4.2 Connecting the measuring unit

4.2.1 Connecting the transmitter

Warning!
- Risk of electric shock! Switch off the power supply before opening the device. Do not install or wire the device while it is energized. Failure to comply with this precaution can result in irreparable damage to the electronics.
- Risk of electric shock! Connect the protective conductor to the ground terminal on the housing before the power supply is applied (not necessary if the power supply is galvanically isolated).
- Compare the specifications on the nameplate with the local voltage supply and frequency. Also comply with national regulations governing the installation of electrical equipment.

1. Remove the cover of the connection compartment (f) from the transmitter housing.
2. Feed the power supply cable (a) and the signal cable (b) through the appropriate cable entries.
3. Perform the wiring:
   – Wiring diagram (aluminum housing) → 34
   – Wiring diagram (stainless steel housing) → 35
   – Wiring diagram (wall-mount housing) → 36
   – Terminal assignment → 52
4. Screw the cover of the connection compartment (f) firmly onto the transmitter housing.

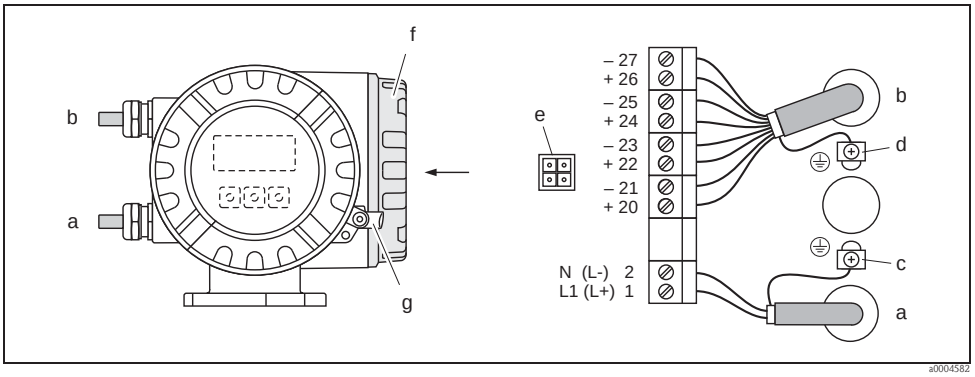

Fig. 34: Connecting the transmitter (aluminum field housing). Cable cross-section: max. 2.5 mm²

a Cable for power supply: 85 to 260 V AC, 20 to 55 V AC, 16 to 62 V DC
*Terminal **No. 1**: L1 for AC, L+ for DC*
*Terminal **No. 2**: N for AC, L- for DC*
*b Signal cable: Terminals **Nos. 20–27** → 52*
c Ground terminal for protective ground
d Ground terminal for signal cable shield
e Service connector for connecting service interface FXA193 (Fieldcheck, FieldCare)
f Cover of the connection compartment
g Securing clamp

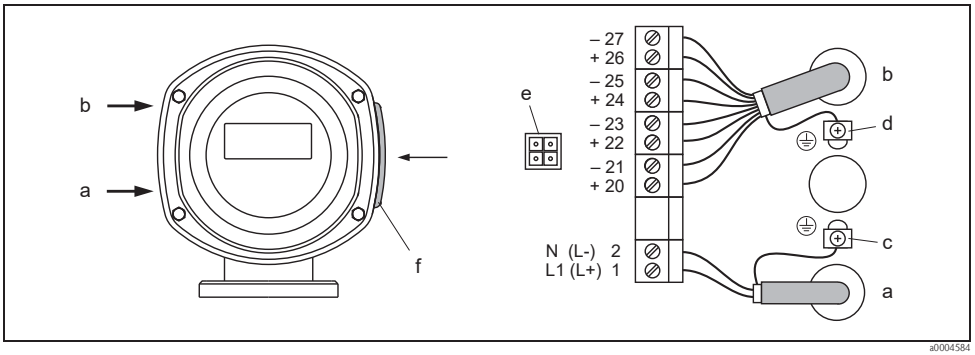

Fig. 35: Connecting the transmitter (stainless steel field housing); cable cross-section: max. 2.5 mm²

a Cable for power supply: 85 to 260 V AC, 20 to 55 V AC, 16 to 62 V DC
*Terminal **No. 1**: L1 for AC, L+ for DC*
*Terminal **No. 2**: N for AC, L- for DC*
*b Signal cable: Terminals **Nos. 20–27** → 52*
c Ground terminal for protective ground
d Ground terminal for signal cable shield
e Service connector for connecting service interface FXA193 (Fieldcheck, FieldCare)
f Cover of the connection compartment

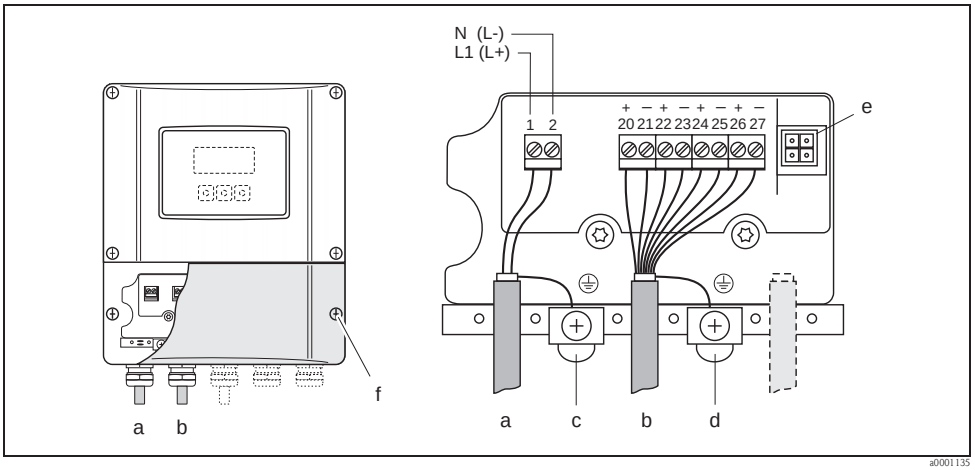

Fig. 36: Connecting the transmitter (wall-mount housing); cable cross-section: max. 2.5 mm²

a Cable for power supply: 85 to 260 V AC, 20 to 55 V AC, 16 to 62 V DC
*Terminal **No. 1**: L1 for AC, L+ for DC*
*Terminal **No. 2**: N for AC, L- for DC*
*b Signal cable: Terminals **Nos. 20–27** → 52*
c Ground terminal for protective ground
d Ground terminal for signal cable shield
e Service connector for connecting service interface FXA193 (Fieldcheck, FieldCare)
f Cover of the connection compartment

4.2.2 Terminal assignment

Order version	Terminal No. (inputs / outputs)			
	20 (+) / 21 (–)	22 (+) / 23 (–)	24 (+) / 25 (–)	26 (+) / 27 (–)
50***-**********W	–	–	–	Current output HART
50***-**********A	–	–	Frequency output	Current output HART
50***-**********D	Status input	Status output	Frequency output	Current output HART
50***-**********S	–	–	Frequency output Ex i	Current output, Ex i, active, HART
50***-**********T	–	–	Frequency output Ex i	Current output, Ex i, passive, HART

Note!
Functional values of the inputs and outputs → 📄 97

4.2.3 HART connection

Users have the following connection options at their disposal:
- Direct connection to transmitter by means of terminals 26(+) and 27 (–)
- Connection by means of the 4 to 20 mA circuit.
- The measuring loop's minimum load must be at least 250 Ω.
- After commissioning, make the following settings:
  – CURRENT SPAN function → "4–20 mA HART"
  – Switch HART write protection on or off → 64

Connection of the HART handheld communicator

See also the documentation issued by the HART Communication Foundation, and in particular HCF LIT 20: "HART, a technical summary".

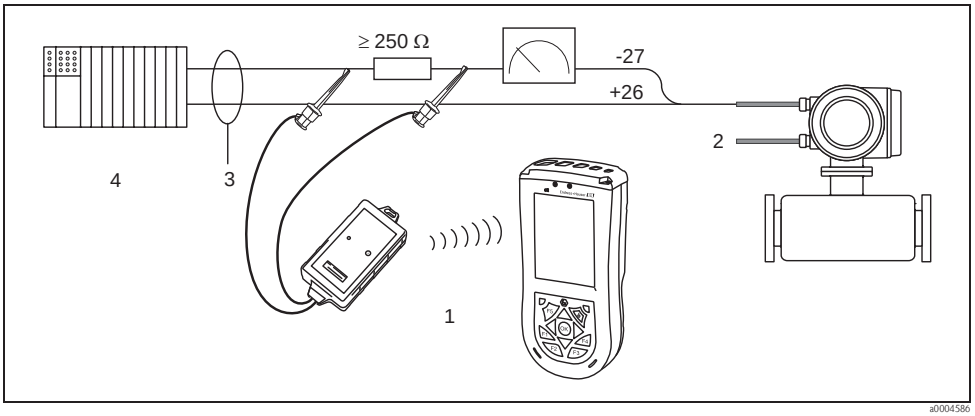

Fig. 37: Electrical connection of HART handheld Field Xpert SFX100

1 HART handheld Field Xpert SFX100
2 Auxiliary energy
3 Shielding
4 Other devices or PLC with passive input

Connection of a PC with an operating software

In order to connect a PC with operating software (e.g. "FieldCare"), a HART modem (e.g. "Commubox FXA195") is needed.

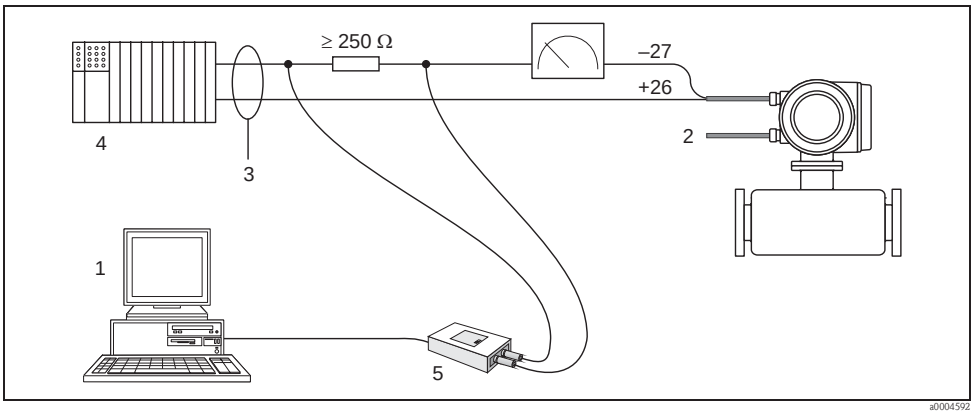

Fig. 38: Electrical connection of a PC with operating software

1 PC with operating software
2 Auxiliary energy
3 Shielding
4 Other devices or PLC with passive input
5 HART modem, e.g. Commubox FXA195

4.3 Potential equalization

Warning!
The measuring system must be included in the potential equalization.

Perfect measurement is only ensured when the fluid and the sensor have the same electrical potential. This is ensured by the reference electrode integrated in the sensor as standard.

The following should also be taken into consideration for potential equalization:
- Internal grounding concepts in the company
- Operating conditions, such as the material/grounding of the pipes (see Table)

4.3.1 Potential equalization for Promag D

- No reference electrode is integrated!
  For the two ground disks of the sensor an electrical connection to the fluid is always ensured.
- Exampels for connections → 📄 54

4.3.2 Potential equalization for Promag W, P, L

- Reference electrode integrated in the sensor as standard
- Exampels for connections → 📄 55

4.3.3 Potential equalization for Promag H

No reference electrode is integrated!
For the metal process connections of the sensor an electrical connection to the fluid is always ensured.

Caution!
If using process connections made of a synthetic material, ground rings have to be used to ensure that potential is equalized (→ 📄 37). The necessary ground rings can be ordered separately from Endress+Hauser as accessories (→ 📄 77).

4.3.4 Exampels for potential equalization connections for Promag D

Standard case

Operating conditions	Potential equalization
When using the measuring device in a: ■ Metal, grounded pipe ■ Plastic pipe ■ Pipe with insulating lining Potential equalization takes place via the ground terminal of the transmitter (standard situation). Note! When installing in metal pipes, we recommend you connect the ground terminal of the transmitter housing with the piping.	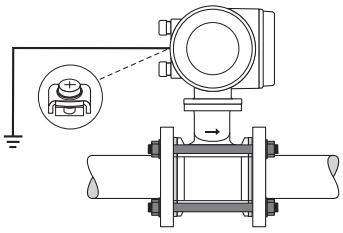 a00012172 *Fig. 39: Via the ground terminal of the transmitter*

Special cases

Operating conditions	Potential equalization
When using the measuring device in a: ■ Metal pipe that is not grounded This connection method also applies in situations where: ■ Customary potential equalization cannot be ensured ■ Excessively high equalizing currents can be expected Potential equalization takes place via the ground terminal of the transmitter and the two pipe flanges. Here, the ground cable (copper wire, 6 mm² (0.0093 in²)) is mounted directly on the conductive flange coating with flange screws.	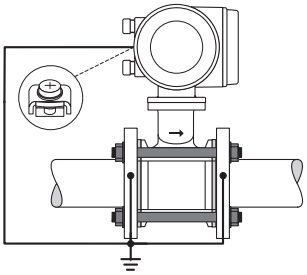 a00012173 *Fig. 40: Via the ground terminal of the transmitter and the flanges of the pipe .*
When using the measuring device in a: ■ Pipe with a cathodic protection unit The device is installed potential-free in the pipe. Only the two flanges of the pipe are connected with a ground cable (copper wire, 6 mm² (0.0093 in²)). Here, the ground cable is mounted directly on the conductive flange coating with flange screws. Note the following when installing: ■ The applicable regulations regarding potential-free installation must be observed. ■ There should be **no** electrically conductive connection between the pipe and the device. ■ The mounting material must withstand the applicable torques.	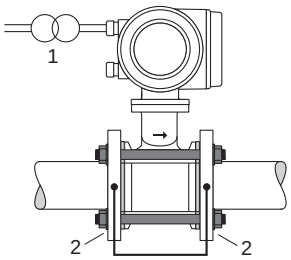 a00012174 *Fig. 41: Potential equalization and cathodic protection* *1 Power supply isolation transformer* *2 Electrically isolated*

4.3.5 Exampels for potential equalization connections for Promag L, W, P

Standard case

Operating conditions	Potential equalization
When using the measuring device in a: ■ Metal, grounded pipe Potential equalization takes place via the ground terminal of the transmitter (standard situation). Note! When installing in metal pipes, we recommend you connect the ground terminal of the transmitter housing with the piping.	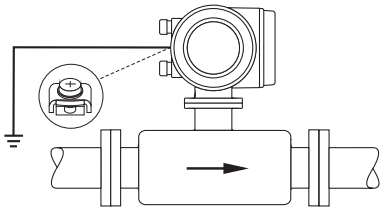 A0011892 *Fig. 42: Via the ground terminal of the transmitter*

Special cases

Operating conditions	Potential equalization
When using the measuring device in a: ■ Metal pipe that is not grounded This connection method also applies in situations where: ■ Customary potential equalization cannot be ensured ■ Excessively high equalizing currents can be expected Both sensor flanges are connected to the pipe flange by means of a ground cable (copper wire, 6 mm² (0.0093 in²)) and grounded. Connect the transmitter or sensor connection housing, as applicable, to ground potential by means of the ground terminal provided for the purpose. Ground cable installation depends on the nominal diameter: ■ DN ≤ 300: The ground cable is mounted directly on the conductive flange coating with the flange screws. ■ DN ≥ 350: The ground cable is mounted directly on the metal transport bracket. ✎ Note! The ground cable for flange-to-flange connections can be ordered separately as an accessory from Endress+Hauser.	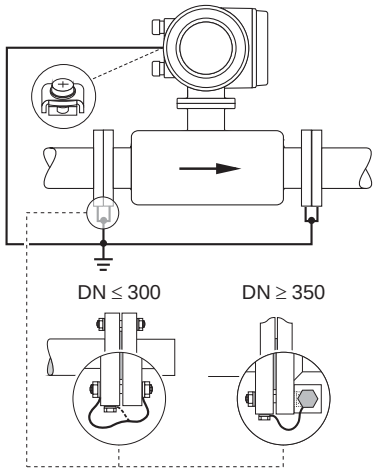 *Fig. 43: Via the ground terminal of the transmitter and the flanges of the pipe*
When using the measuring device in a: ■ Plastic pipe ■ Pipe with insulating lining This connection method also applies in situations where: ■ Customary potential equalization cannot be ensured ■ Excessively high equalizing currents can be expected Potential equalization takes place using additional ground disks, which are connected to the ground terminal via a ground cable (copper wire, min. 6 mm² (0.0093 in²)). When installing the ground disks, please comply with the enclosed Installation Instructions.	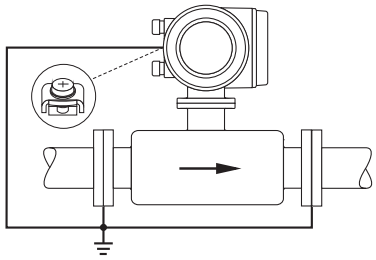 *Fig. 44: Via the ground terminal of the transmitter*
When using the measuring device in a: ■ Pipe with a cathodic protection unit The device is installed potential-free in the pipe. Only the two flanges of the pipe are connected with a ground cable (copper wire, 6 mm² (0.0093 in²)). Here, the ground cable is mounted directly on the conductive flange coating with flange screws. Note the following when installing: ■ The applicable regulations regarding potential-free installation must be observed. ■ There should be **no** electrically conductive connection between the pipe and the device. ■ The mounting material must withstand the applicable torques.	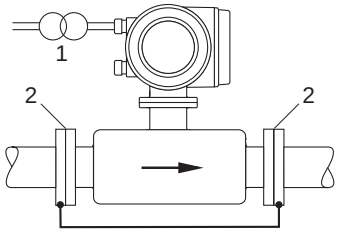 *Fig. 45: Potential equalization and cathodic protection* *1 Power supply isolation transformer* *2 Electrically isolated*

4.4 Degree of protection

The devices meet all the requirements of IP 67 degree of protection.

Compliance with the following points is mandatory following installation in the field or servicing in order to ensure that IP 67 protection is maintained:

- The housing seals must be clean and undamaged when inserted into their grooves. The seals must be dried, cleaned or replaced if necessary.
- All threaded fasteners and screw covers must be firmly tightened.
- The cables used for connection must be of the specified outside diameter → 49.
- Firmly tighten the cable entries.
- The cables must loop down before they enter the cable entries ("water trap"). This arrangement prevents moisture penetrating the entry. Always install the measuring device in such a way that the cable entries do not point up.
- Remove all unused cable entries and insert plugs instead.
- Do not remove the grommet from the cable entry.

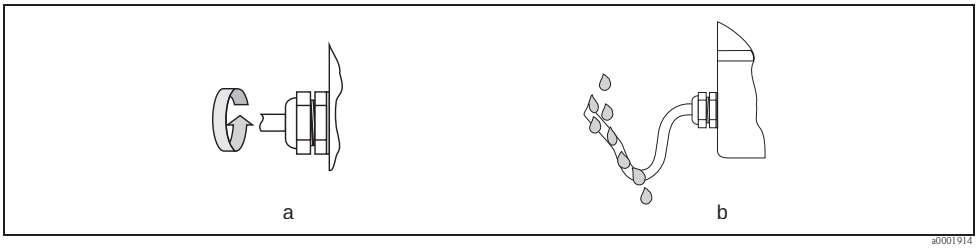

Fig. 46: Installation instructions, cable entries

Caution!
Do not loosen the threaded fasteners of the sensor housing, as otherwise the degree of protection guaranteed by Endress+Hauser no longer applies.

Note!
The Promag L, Promag W and Promag P sensors can be supplied with IP 68 rating (permanent immersion in water to a depth of 3 meters (10 ft)). In this case the transmitter must be installed remote from the sensor.
The Promag L sensors with IP 68 rating are only available with stainless steel flanges.

4.5 Post-connection check

Perform the following checks after completing electrical installation of the measuring device:

Device condition and specifications	Notes
Are cables or the device damaged (visual inspection)?	–
Electrical connection	**Notes**
Does the supply voltage match the specifications on the nameplate?	■ 85 to 250 V AC (50 to 60 Hz) ■ 20 to 28 V AC (50 to 60 Hz) 11 to 40 V DC
Do the cables used comply with the necessary specifications?	→ 📄 49
Do the cables have adequate strain relief?	–
Is the cable type route completely isolated? Without loops and crossovers?	–
Are the power-supply and signal cables correctly connected?	See the wiring diagram inside the cover of the terminal compartment
Are all screw terminals firmly tightened?	–
Have the measures for grounding/potential equalization been correctly implemented?	→ 📄 54
Are all cable entries installed, firmly tightened and correctly sealed? Cables looped as "water traps"?	→ 📄 57
Are all housing covers installed and firmly tightened?	–

5 Operation

5.1 Display and operating elements

The local display enables you to read all important parameters directly at the measuring point and configure the device.
The display area consists of two lines; this is where measured values are displayed, and/or status variables (direction of flow, partially filled pipe, bar graph, etc.). You can change the assignment of display lines to variables at will in order to customize the display to suit your needs and preferences (→ "Description of Device Functions" manual).

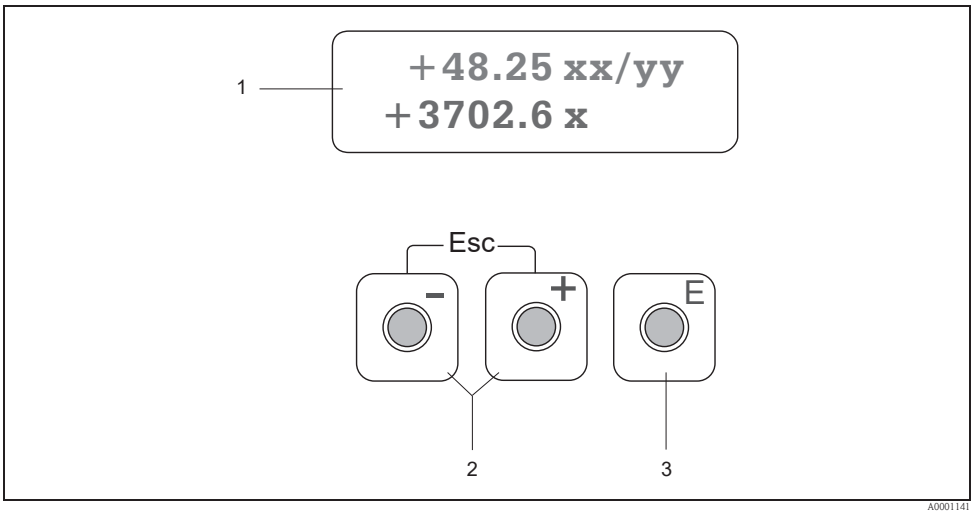

Fig. 47: Display and operating elements

1 Liquid crystal display
The two-line liquid-crystal display shows measured values, dialog texts, error messages and information messages. The display as it appears when normal measuring is in progress is known as the HOME position (operating mode).
– Upper display line: Shows primary measured values, e.g. volume flow in [ml/min] or in [%].
– Lower display line: Shows supplementary measured variables and status variables, e.g. totalizer reading in [m3], bar graph, measuring point designation

2 Plus/minus keys
– Enter numerical values, select parameters
– Select different function groups within the function matrix

Press the +/- keys simultaneously to trigger the following functions:
– Exit the function matrix step by step → HOME position
– Press and hold down +/- keys for longer than 3 seconds → Return directly to HOME position
– Cancel data entry

3 Enter key
– HOME position → Entry into the function matrix
– Save the numerical values you input or settings you change

5.2 Brief operating instructions on the function matrix

Note!
- See the general notes on → 61.
- Detailed description of all the functions → "Description of Device Functions" manual

The function matrix comprises two levels, namely the function groups and the functions of the function groups.
The groups are the highest-level grouping of the control options for the device. A number of functions is assigned to each group. You select a group in order to access the individual functions for operating and configuring the device.

1. HOME position → E → Enter the function matrix
2. Select a function group (e.g. OPERATION)
3. Select a function (e.g. LANGUAGE)
   Change parameter/enter numerical values:
   ± → select or enter enable code, parameters, numerical values
   E → save your entries
4. Exit the function matrix:
   – Press and hold down Esc key (Esc) for longer than 3 seconds → HOME position
   – Repeatedly press Esc key (Esc) → return step by step to HOME position

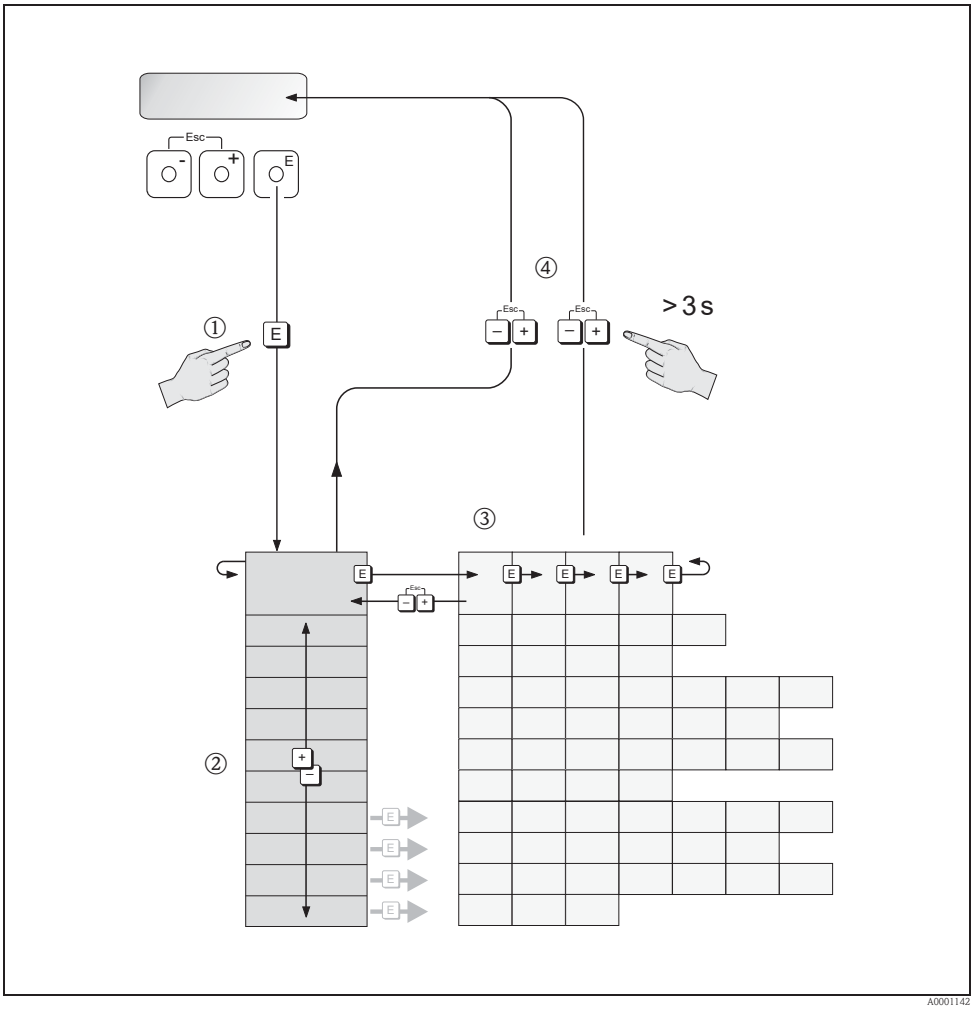

Fig. 48: Selecting functions and configuring parameters (function matrix)

5.2.1 General notes

The Quick Setup menu (→ 71) is adequate for commissioning in most instances. Complex measuring operations on the other hand necessitate additional functions that you can configure as necessary and customize to suit your process parameters. The function matrix, therefore, comprises a multiplicity of additional functions which, for the sake of clarity, are arranged in a number of function groups.

Comply with the following instructions when configuring functions:
- You select functions as described on → 60.
- You can switch off certain functions (OFF). If you do so, related functions in other function groups will no longer be displayed.
- Certain functions prompt you to confirm your data entries.
  Press ± to select "SURE [YES]" and press E again to confirm. This saves your setting or starts a function, as applicable.
- Return to the HOME position is automatic if no key is pressed for 5 minutes.

Note!
- The transmitter continues to measure while data entry is in progress, i.e. the current measured values are output via the signal outputs in the normal way.
- If the power supply fails, all preset and configured values remain safely stored in the EEPROM.

Caution!
All functions are described in detail, including the function matrix itself, in the "Description of Device Functions" manual, which is a separate part of these Operating Instructions.

5.2.2 Enabling the programming mode

The function matrix can be disabled. Disabling the function matrix rules out the possibility of inadvertent changes to device functions, numerical values or factory settings. A numerical code (factory setting = 50) has to be entered before settings can be changed.
If you use a code number of your choice, you exclude the possibility of unauthorized persons accessing data (→ see the "Description of Device Functions" manual).

Comply with the following instructions when entering codes:
- If programming is disabled and the ± operating elements are pressed in any function, a prompt for the code automatically appears on the display.
- If "0" is specified as the customer's code, programming is always enabled.
- The Endress+Hauser service organization can be of assistance if you mislay your personal code.

Caution!
Changing certain parameters such as all sensor characteristics, for example, influences numerous functions of the entire measuring system, particularly measuring accuracy.
There is no need to change these parameters under normal circumstances and consequently, they are protected by a special code known only to the Endress+Hauser service organization.
Please contact Endress+Hauser if you have any questions.

5.2.3 Disabling the programming mode

Programming is disabled if you do not press the operating elements within 60 seconds following automatic return to the HOME position.
You can also disable programming in the "ACCESS CODE" function by entering any number (other than the customer's code).

5.3 Displaying error messages

5.3.1 Type of error

Errors which occur during commissioning or measuring operation are displayed immediately. If two or more system or process errors occur, the error with the highest priority is the one shown on the display.

The measuring system distinguishes between two types of error:
- *System errors* → 81*:*
  This group comprises all device errors, e.g. communication errors, hardware faults, etc.
- *Process errors* → 83:
  This group comprises all application errors, e.g. empty pipe, etc.

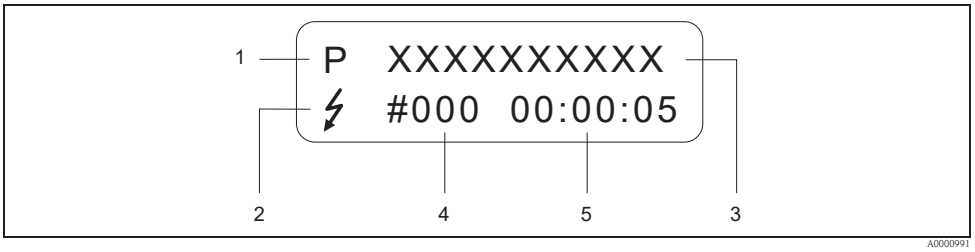

Fig. 49: Error messages on the display (example)

1 Error type:
– P = process error
– S = system error
2 Error message type:
– ϟ = fault message
– ! = notice message
3 Error designation: e.g. EMPTY PIPE = measuring tube is only partly filled or completely empty
4 Error number: e.g. #401
5 Duration of most recent error occurrence (in hours, minutes and seconds)

5.3.2 Error message types

Users have the option of weighting certain errors differently, in other words having them classed as "Fault messages" or "Notice messages". You can define messages in this way with the aid of the function matrix (→ "Description of Device Functions" manual).
Serious system errors, e.g. module defects, are always identified and classed as "fault messages" by the measuring device.

Notice message (!)

- Displayed as → Exclamation mark (!), error type (S: system error, P: process error)
- The error in question has no effect on the outputs of the measuring device.

Fault message ≃ϟ)

- Displayed as → Lightning flash (ϟ), error type (S: system error, P: process error).
- The error in question has a direct effect on the outputs.
  The response of the individual outputs (failsafe mode) can be defined in the function matrix using the "FAILSAFE MODE" function (→ "Description of Device Functions" manual).

Note!
For security reasons, error messages should be output via the status output.

5.4 Communication

In addition to local operation, the measuring device can be configured and measured values can be obtained by means of the HART protocol. Digital communication takes place using the 4–20 mA current output HART → 53.

The HART protocol allows the transfer of measuring and device data between the HART master and the field devices for configuration and diagnostics purposes.
The HART master, e.g. a handheld terminal or PC-based operating programs (such as FieldCare), require device description (DD) files which are used to access all the information in a HART device. Information is exclusively transferred using so-called "commands". There are three different command classes:

- *Universal commands:*
  All HART device support and use universal commands.
  The following functionalities are linked to them:
  – Identify HART devices
  – Reading digital measured values (volume flow, totalizer, etc.)
- *Common practice commands:*
  Common practice commands offer functions which are supported and can be executed by most but not all field devices.
- *Device-specific commands:*
  These commands allow access to device-specific functions which are not HART standard. Such commands access individual field device information, amongst other things, such as empty/full pipe calibration values, low flow cutoff settings, etc.

Note!
The device has access to all three command classes. A list of all the "Universal commands" and "Common practice commands" is provided on → 65.

5.4.1 Operating options

For the complete operation of the measuring device, including device-specific commands, there are DD files available to the user to provide the following operating aids and programs:

Field Xpert HART Communicator

Selecting device functions with a HART Communicator is a process involving a number of menu levels and a special HART function matrix.
The HART manual in the carrying case of the HART Communicator contains more detailed information on the device.

Operating program "FieldCare"

FieldCare is Endress+Hauser's FDT-based plant Asset Management Tool and allows the configuration and diagnosis of intelligent field devices. By using status information, you also have a simple but effective tool for monitoring devices. The Proline flow measuring devices are accessed via a service interface or via the service interface FXA193.

Operating program "SIMATIC PDM" (Siemens)

SIMATIC PDM is a standardized, manufacturer-independent tool for the operation, configuration, maintenance and diagnosis of intelligent field devices.

Operating program "AMS" (Emerson Process Management)

AMS (Asset Management Solutions): program for operating and configuring devices.

5.4.2 Current device description files

The following table illustrates the suitable device description file for the operating tool in question and then indicates where these can be obtained.

HART protocol:

Valid for device software:	2.03.XX	→ Function DEVICE SOFTWARE
Device data HART Manufacturer ID: Device ID:	 11_{hex} (ENDRESS+HAUSER) 41_{hex}	 → Function MANUFACTURER ID → Function DEVICE ID
HART version data:	Device Revision 6/ DD Revision 1	
Software release:	07.2009	

Operating program:	**Sources for obtaining device descriptions:**
Handheld Field Xpert SFX100	Use update function of handheld terminal
FieldCare / DTM	■ www.endress.com → Download ■ CD-ROM (Endress+Hauser order number 56004088) ■ DVD (Endress+Hauser order number 70100690)
AMS	www.endress.com → Download
SIMATIC PDM	www.endress.com → Download

Tester/simulator:	**Sources for obtaining device descriptions:**
Fieldcheck	Update by means of FieldCare with the flow device FXA193/291 DTM in the Fieldflash module

Note!
The "Fieldcheck" tester/simulator is used for testing flowmeters in the field. When used in conjunction with the "FieldCare" software package, test results can be imported into a database, printed out and used for official certification. Contact your Endress+Hauser representative for more information.

5.4.3 Device variables

The following device variables are available using the HART protocol:

Code (decimal)	Device variable
0	OFF (not assigned)
1	Volume flow
250	Totalizer 1
251	Totalizer 2

At the factory, the process variables are assigned to the following device variables:
- Primary process variable (PV) → Volume flow
- Second process variable (SV) → Totalizer 1
- Third process variable (TV) → not assigned
- Fourth process variable (FV) → not assigned

Note!
You can set or change the assignment of device variables to process variables using Command 51.

5.4.4 Switching HART write protection on/off

The HART write protection can be switched on and off using the HART WRITE PROTECT device function (→ "Description of Device Functions" manual).

5.4.5 Universal and common practice HART commands

The following table contains all the universal commands supported by the device.

Command No. HART command / Access type		Command data (numeric data in decimal form)	Response data (numeric data in decimal form)
Universal commands			
0	Read unique device identifier Access type = read	none	Device identification delivers information on the device and the manufacturer. It cannot be changed. The response consists of a 12 byte device ID: – Byte 0: fixed value 254 – Byte 1: Manufacturer ID, 17 = E+H – Byte 2: Device type ID, 65 = Promag 50 – Byte 3: Number of preambles – Byte 4: Universal commands rev. no. – Byte 5: Device-specific commands rev. no. – Byte 6: Software revision – Byte 7: Hardware revision – Byte 8: Additional device information – Bytes 9-11: Device identification
1	Read primary process variable Access type = read	none	– Byte 0: HART unit code of the primary process variable – Bytes 1-4: Primary process variable Factory setting: Primary process variable = Volume flow ✎ Note! ■ Manufacturer-specific units are represented using the HART unit code "240". ■ You can change the assignment of device variables to process variables using Command 51.
2	Read the primary process variable as current in mA and percentage of the set measuring range Access type = read	none	– Bytes 0-3: actual current of the primary process variable in mA – Bytes 4-7: % value of the set measuring range Factory setting: Primary process variable = Volume flow ✎ Note! You can change the assignment of device variables to process variables using Command 51.
3	Read the primary process variable as current in mA and four dynamic process variables Access type = read	none	24 bytes are sent as a response: – Bytes 0-3: primary process variable current in mA – Byte 4: HART unit code of the primary process variable – Bytes 5-8: Primary process variable – Byte 9: HART unit code of the second process variable – Bytes 10-13: Second process variable – Byte 14: HART unit code of the third process variable – Bytes 15-18: Third process variable – Byte 19: HART unit code of the fourth process variable – Bytes 20-23: Fourth process variable *Factory setting:* ■ Primary process variable = Volume flow ■ Second process variable = Totalizer 1 ■ Third process variable = OFF (not assigned) ■ Fourth process variable = OFF (not assigned) ✎ Note! ■ Manufacturer-specific units are represented using the HART unit code "240". ■ You can change the assignment of device variables to process variables using Command 51.

Command No. HART command / Access type		Command data (numeric data in decimal form)	Response data (numeric data in decimal form)
6	Set HART shortform address Access type = write	Byte 0: desired address (0 to 15) Factory setting: 0 ✎ Note! With an address >0 (multidrop mode), the current output of the primary process variable is set to 4 mA.	Byte 0: active address
11	Read unique device identification using the TAG (measuring point designation) Access type = read	Bytes 0-5: TAG	Device identification delivers information on the device and the manufacturer. It cannot be changed. The response consists of a 12 byte device ID if the given TAG agrees with the one saved in the device: – Byte 0: fixed value 254 – Byte 1: Manufacturer ID, 17 = E+H – Byte 2: Device type ID, 65 = Promag 50 – Byte 3: Number of preambles – Byte 4: Universal commands rev. no. – Byte 5: Device-specific commands rev. no. – Byte 6: Software revision – Byte 7: Hardware revision – Byte 8: Additional device information – Bytes 9-11: Device identification
12	Read user message Access type = read	none	Bytes 0-24: User message ✎ Note! You can write the user message using Command 17.
13	Read TAG, descriptor and date Access type = read	none	– Bytes 0-5: TAG – Bytes 6-17: descriptor – Bytes 18-20: Date ✎ Note! You can write the TAG, descriptor and date using Command 18.
14	Read sensor information on primary process variable	none	– Bytes 0-2: Sensor serial number – Byte 3: HART unit code of sensor limits and measuring range of the primary process variable – Bytes 4-7: Upper sensor limit – Bytes 8-11: Lower sensor limit – Bytes 12-15: Minimum span ✎ Note! ■ The data relate to the primary process variable (= volume flow). ■ Manufacturer-specific units are represented using the HART unit code "240".
15	Read output information of primary process variable Access type = read	none	– Byte 0: Alarm selection ID – Byte 1: Transfer function ID – Byte 2: HART unit code for the set measuring range of the primary process variable – Bytes 3-6: upper range, value for 20 mA – Bytes 7-10: lower range, value for 4 mA – Bytes 11-14: Damping constant in [s] – Byte 15: Write protection ID – Byte 16: OEM dealer ID, 17 = E+H Factory setting: Primary process variable = Volume flow ✎ Note! ■ Manufacturer-specific units are represented using the HART unit code "240". ■ You can change the assignment of device variables to process variables using Command 51.

Command No. HART command / Access type		Command data (numeric data in decimal form)	Response data (numeric data in decimal form)
16	Read the device production number Access type = read	none	Bytes 0–2: Production number
17	Write user message Access = write	You can save any 32-character long text in the device under this parameter: Bytes 0–23: Desired user message	Displays the current user message in the device: Bytes 0–23: Current user message in the device
18	Write TAG, descriptor and date Access = write	With this parameter, you can store an 8 character TAG, a 16 character descriptor and a date: – Bytes 0–5: TAG – Bytes 6–17: descriptor – Bytes 18–20: Date	Displays the current information in the device: – Bytes 0–5: TAG – Bytes 6–17: descriptor – Bytes 18–20: Date
19	Write the device production number Access = write	Bytes 0–2: Production number	Bytes 0–2: Production number

The following table contains all the common practice commands supported by the device.

Command No. HART command / Access type		Command data (numeric data in decimal form)	Response data (numeric data in decimal form)
Common practice commands			
34	Write damping value for primary process variable Access = write	Bytes 0–3: Damping value of the primary process variable "volume flow" in seconds *Factory setting:* Primary process variable = Current output damping	Displays the current damping value in the device: Bytes 0–3: Damping value in seconds
35	Write measuring range of primary process variable Access = write	Write the desired measuring range: – Byte 0: HART unit code of the primary process variable – Bytes 1–4: upper range, value for 20 mA – Bytes 5–8: lower range, value for 4 mA *Factory setting:* Primary process variable = Volume flow ✎ Note! ■ The start of the measuring range (4 mA) must correspond to the zero flow. ■ If the HART unit code is not the correct one for the process variable, the device will continue with the last valid unit.	The currently set measuring range is displayed as a response: – Byte 0: HART unit code for the set measuring range of the primary process variable – Bytes 1–4: upper range, value for 20 mA – Bytes 5–8: lower range, value for 4 mA ✎ Note! ■ Manufacturer-specific units are represented using the HART unit code "240". ■ You can change the assignment of device variables to process variables using Command 51.
38	Device status reset (configuration changed) Access = write	none	none ✎ Note! It is also possible to execute this HART command when write protection is activated (= ON)!
40	Simulate input current of primary process variable Access = write	Simulation of the desired output current of the primary process variable. An entry value of 0 exits the simulation mode: Bytes 0–3: Output current in mA *Factory setting:* Primary process variable = Volume flow ✎ Note! You can set the assignment of device variables to process variables using Command 51.	The momentary output current of the primary process variable is displayed as a response: Bytes 0–3: Output current in mA
42	Perform master reset Access = write	none	none

Command No. HART command / Access type		Command data (numeric data in decimal form)	Response data (numeric data in decimal form)
44	Write unit of primary process variable Access = write	Set unit of primary process variable. Only units which are suitable for the process variable are transferred to the device: Byte 0: HART unit code *Factory setting:* Primary process variable = Volume flow ✎ Note! ■ If the written HART unit code is not the correct one for the process variable, the device will continue with the last valid unit. ■ If you change the unit of the primary process variable, this has a direct impact on the system units.	The current unit code of the primary process variable is displayed as a response: Byte 0: HART unit code ✎ Note! Manufacturer-specific units are represented using the HART unit code "240".
48	Read additional device status Access = read	none	The device status is displayed in extended form as the response: Coding: see table → 🗎 69
50	Read assignment of the device variables to the four process variables Access = read	none	Display of the current variable assignment of the process variables: – Byte 0: Device variable code to the primary process variable – Byte 1: Device variable code to the second process variable – Byte 2: Device variable code to the third process variable – Byte 3: Device variable code to the fourth process variable *Factory setting:* ■ Primary process variable: Code 1 for volume flow ■ Second process variable: Code 250 for totalizer ■ Third process variable: Code 0 for OFF (not assigned) ■ Fourth process variable: Code 0 for OFF (not assigned)
51	Write assignment of the device variables to the four process variables Access = write	Setting of the device variables to the four process variables: – Byte 0: Device variable code to the primary process variable – Byte 1: Device variable code to the second process variable – Byte 2: Device variable code to the third process variable – Byte 3: Device variable code to the fourth process variable *Factory setting:* ■ Primary process variable: Volume flow ■ Second process variable: Totalizer 1 ■ Third process variable: OFF (not assigned) ■ Fourth process variable: OFF (not assigned)	The variable assignment of the process variables is displayed as a response: – Byte 0: Device variable code to the primary process variable – Byte 1: Device variable code to the second process variable – Byte 2: Device variable code to the third process variable – Byte 3: Device variable code to the fourth process variable
53	Write device variable unit Access = write	This command sets the unit of the given device variables. Only those units which suit the device variable are transferred: – Byte 0: Device variable code – Byte 1: HART unit code Code of the supported device variables: See information → 🗎 64 ✎ Note! ■ If the written unit is not the correct one for the device variable, the device will continue with the last valid unit. ■ If you change the unit of the device variable, this has a direct impact on the system units.	The current unit of the device variables is displayed in the device as a response: – Byte 0: Device variable code – Byte 1: HART unit code ✎ Note! Manufacturer-specific units are represented using the HART unit code "240".
59	Write number of preambles in response message Access = write	This parameter sets the number of preambles which are inserted in the response messages: Byte 0: Number of preambles (4 to 20)	The current number of preambles is displayed in the response telegram: Byte 0: Number of preambles

5.4.6 Device status and error messages

You can read the extended device status, in this case, current error messages, via Command "48". The command delivers information which is partly coded in bits (see table below).

Note!
- You can find a detailed explanation of the device status and error messages and their elimination on → 69
- Bits and bytes not listed are not assigned.

Byte	Bit	Error No.	Short error description
0	0	001	Serious device error
	1	011	Measuring amplifier has faulty EEPROM
	2	012	Error when accessing data of the measuring amplifier EEPROM
1	1	031	S-DAT: defective or missing
	2	032	S-DAT: Error accessing saved values
	5	051	I/O and the amplifier are not compatible.
3	3	111	Totalizer checksum error
	4	121	I/O board and amplifier not compatible.
4	3	251	Internal communication fault on the amplifier board.
	4	261	No data reception between amplifier and I/O board
5	0	321	Coil current of the sensor is outside the tolerance.
	7	339	Flow buffer: The temporarily buffered flow portions (measuring mode for pulsating flow) could not be cleared or output within 60 seconds.
6	0	340	
	1	341	
	2	342	
	3	343	Frequency buffer: The temporarily buffered flow portions (measuring mode for pulsating flow) could not be cleared or output within 60 seconds.
	4	344	
	5	345	
	6	346	
	7	347	Pulse buffer: The temporarily buffered flow portions (measuring mode for pulsating flow) could not be cleared or output within 60 seconds.
7	0	348	
	1	349	
	2	350	
	3	351	Current output: Flow is out of range.
	4	352	
	5	353	
	6	354	
	7	355	Frequency output: Flow is out of range.
8	0	356	
	1	357	
	2	358	

Byte	Bit	Error No.	Short error description
8	3	359	Pulse output: Flow is out of range.
	4	360	
	5	361	
	6	362	
10	7	401	Measuring tube partially filled or empty
11	2	461	EPD calibration not possible because the fluid's conductivity is either too low or too high.
	4	463	The EPD calibration values for empty pipe and full pipe are identical, and therefore incorrect.
12	1	474	Maximum flow value entered is overshot
	7	501	Amplifier software version is loaded. Currently no other commands are possible.
13	0	502	Upload/download of device files. Currently no other commands are possible.
14	3	601	Positive zero return active
	7	611	Simulation current output active
15	0	612	
	1	613	
	2	614	
	3	621	Simulation frequency output active
	4	622	
	5	623	
	6	624	
	7	631	Simulation pulse output active
16	0	632	
	1	633	
	2	634	
	3	641	Simulation status output active
	4	642	
	5	643	
	6	644	
17	7	671	Simulation of the status input active
18	0	672	
	1	673	
	2	674	
	3	691	Simulation of response to error (outputs) active
	4	692	Simulation of volume flow active

6 Commissioning

6.1 Function check

Make sure that all final checks have been completed before you start up your measuring point:
- Checklist for "Post-installation check" → 43
- Checklist for "Post-connection check" → 58

6.2 Switching on the measuring device

Once the connection checks have been successfully completed, it is time to switch on the power supply. The device is now operational. The measuring device performs a number of post switch-on self-tests. As this procedure progresses the following sequence of messages appears on the local display:

PROMAG 50 **STARTUP. . .**	Start-up message
▼	
DEVICE SOFTWARE **V XX.XX.XX**	Current software version
▼	
SYSTEM OK **→OPERATION**	Beginning of normal measuring mode
▼	

Normal measuring mode commences as soon as start-up completes.
Various measured-value and/or status variables (HOME position) appear on the display.

Note!
If start-up fails, an error message indicating the cause is displayed.

6.3 Quick Setup

In the case of measuring devices without a local display, the individual parameters and functions must be configured via the operating program, e.g. FieldCare.
If the measuring device is equipped with a local display, all the important device parameters for standard operation, as well as additional functions, can be configured quickly and easily by means of the following Quick Setup menu.

6.3.1 "Commissioning" Quick Setup menu

This Quick Setup menu guides you systematically through the setup procedure for all the major device functions that have to be configured for standard measuring operation.

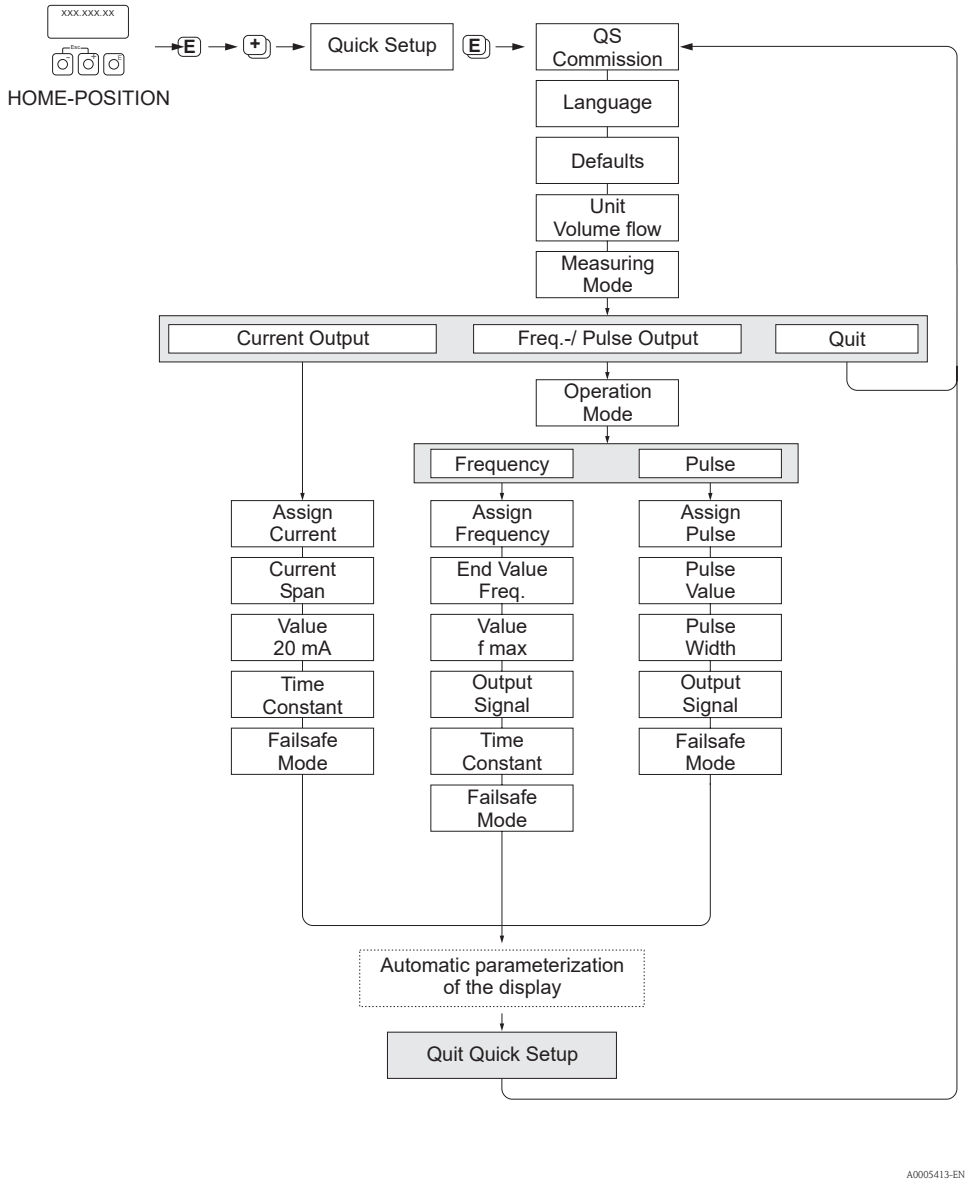

Fig. 50: "QUICK SETUP COMMISSIONING" menu for the rapid configuration of important device functions

6.4 Configuration

6.4.1 Current output: active/passive

The current output is configured as "active" or "passive" by means of various jumpers on the I/O board.

Warning!
Risk of electric shock! Exposed components carry dangerous voltages. Make sure that the power supply is switched off before you remove the cover of the electronics compartment.

1. Switch off power supply.
2. Remove the I/O board → 88
3. Position the jumper → 51

   Caution!
   Risk of destroying the measuring device. Set the jumpers exactly as shown in the graphic. Pay strict attention to the position of the jumpers as indicated in the graphic.
4. Installation of the I/O board is the reverse of the removal procedure.

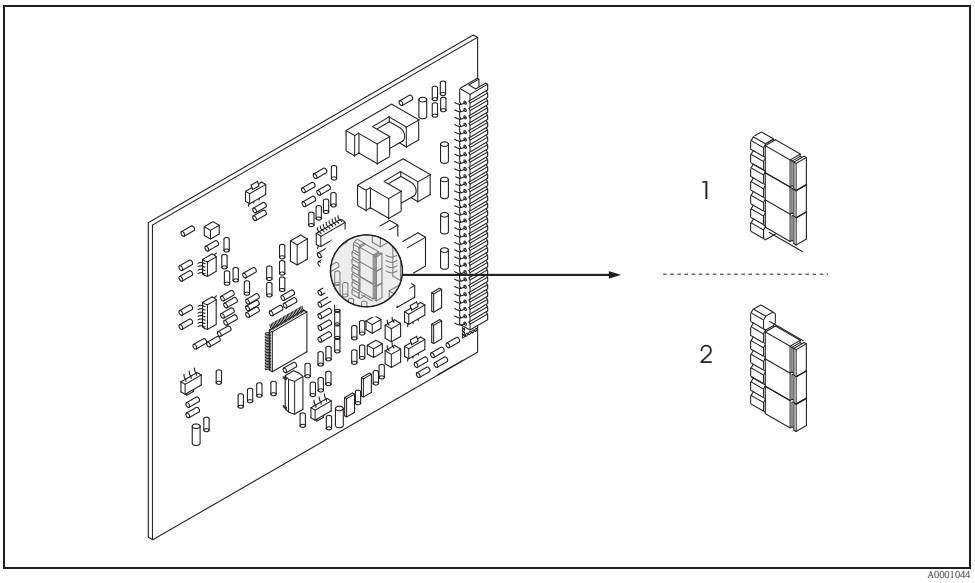

Fig. 51: Configuring current outputs using jumpers (I/O board)

1 Active current output (factory setting)
2 Passive current output

6.5 Adjustment

6.5.1 Empty-pipe/full-pipe adjustment

Flow cannot be measured correctly unless the measuring tube is completely full.
This status can be permanently monitored using the Empty Pipe Detection:

- EPD = Empty Pipe Detection (with the help of an EPD electrode)
- OED = Open Electrode Detection (Empty Pipe Detection with the help of the measuring electrodes, if the sensor is not equipped with an EPD electrode or the orientation is not suitable for using EPD).

Caution!
Detailed information on the empty-pipe/full-pipe adjustment procedure can be found in the "Description of Device Functions" manual:
- EPD/OED ADJUSTMENT (carrying out the adjustment).
- EPD (switching on and off EPD/OED).
- EPD RESPONSE TIME (input of the response time for EPD/OED).

Note!
- The EPD function is not available unless the sensor is fitted with an EPD electrode.
- The devices are already calibrated at the factory with water (approx. 500 µS/cm).
  If the fluid conductivity differs from this reference, empty-pipe/full-pipe adjustment has to be performed again on site.
- The default setting for EPD when the devices are delivered is OFF; the function has to be activated if required.
- The EPD process error can be output by means of the configurable relay output.

Performing empty-pipe and full-pipe adjustment (EPD)

1. Select the appropriate function in the function matrix:
   HOME → E → + → PROCESS PARAMETER → E → + → EPD ADJUSTMENT
2. Empty the piping:
   – The wall of the measuring tube should still be wet with fluid during EPD empty pipe adjustment
   – The wall of the measuring tube/the measuring electrodes should **no longer** be wet with fluid during OED empty pipe adjustment
3. Start empty-pipe adjustment: Select "EMPTY PIPE ADJUST" or "OED EMPTY ADJUST" and press E to confirm.
4. After empty-pipe adjustment, fill the piping with fluid.
5. Start full-pipe adjustment: Select "FULL PIPE ADJUST" or "OED FULL ADJUST" and press E to confirm.
6. Having completed the adjustment, select the setting "OFF" and exit the function by pressing E.
7. Switch on empty pipe detection in the EPD function:
   – EPD empty pipe adjustment: Select ON STANDARD or ON SPECIAL and press E to confirm
   – OED empty pipe adjustment: Select OED and confirm with E.

   Caution!
   The adjustment coefficients must be valid before you can activate the EPD function. If adjustment is incorrect the following messages might appear on the display:
   – FULL = EMPTY
     The adjustment values for empty pipe and full pipe are identical. In cases of this nature you must repeat empty-pipe or full-pipe adjustment!
   – ADJUSTMENT NOT OK
     Adjustment is not possible because the fluid's conductivity is out of range.

6.6 Data storage device (HistoROM)

At Endress+Hauser, the term HistoROM refers to various types of data storage modules on which process and measuring device data are stored. It is possible to plug these modules into other devices to copy device configurations from one device to another, for example.

6.6.1 HistoROM/S-DAT (sensor-DAT)

The S-DAT is an exchangeable data storage device in which all sensor relevant parameters are stored, i.e., diameter, serial number, calibration factor, zero point.

7 Maintenance

No special maintenance work is required.

7.1 Exterior cleaning

When cleaning the exterior of measuring devices, always use cleaning agents that do not attack the surface of the housing and the seals.

7.2 Seals

The seals of the Promag H sensor must be replaced periodically, particularly in the case of gasket seals (aseptic version).
The period between changes depends on the frequency of cleaning cycles, the cleaning temperature and the fluid temperature.

Replacement seals (accessories) → 77.

8 Accessories

Various accessories, which can be ordered separately from Endress+Hauser, are available for the transmitter and the sensor. Your Endress+Hauser service organization can provide detailed information on the specific order codes on request.

8.1 Device-specific accessories

Accessory	Description	Order code
Proline Promag 50 transmitter	Transmitter for replacement or storage. Use the order code to define the following specifications: ■ Approvals ■ Degree of protection/version ■ Cable for remote version ■ Cable entry ■ Display/power supply/operation ■ Software ■ Outputs/inputs	50XXX – XXXXX******

8.2 Measuring principle-specific accessories

Accessory	Description	Order code
Mounting set for Promag 50 transmitter	Mounting set for the transmitter (remote version). Suitable for: ■ Wall mounting ■ Pipe mounting ■ Panel-mounted installation Mounting set for aluminum field housing. Suitable for: ■ Pipe mounting	DK5WM – *
Wall-mounting kit for Promag H	Wall-mounting kit for the Promag H sensor.	DK5HM – **
Cable for remote version	Coil and signal cables, various lengths.	DK5CA – **
Mounting kit for Promag D, wafer version	Mounting kit consisting of: ■ Mounting bolts ■ Nuts incl. washers ■ Flange seals ■ Centering sleeves (if required for the flange)	DKD** – **
Set of seals for Promag D	Set of seals consisting of two flange seals.	DK5DD – ***
Mounting kit for Promag H	Mounting kit consisting of: ■ 2 process connections ■ Threaded fasteners ■ Seals	DKH** – ****
Set of seals for Promag H	For regular replacement of the seals of the Promag H sensor.	DK5HS – ***
Welding jig for Promag H	Weld nipple as process connection: welding jig for installation in pipe.	DK5HW – ***
Adapter connection for Promag A, H	Adapter connections for installing a Promag 10 H instead of a Promag 30/33 A or Promag 30/33 H DN 25.	DK5HA – *****
Ground rings for Promag H	Ground rings for potential equalization.	DK5HR – ***
Ground cable for Promag L, W, P	Ground cable for potential equalization.	DK5GC – ***
Ground disk for Promag L, W, P	Ground disk for potential equalization.	DK5GD – * * ***

Accessory	Description	Order code
Process display RIA45	Multifunctional 1-channel display unit: ■ Universal input ■ Transmitter power supply ■ Limit relay ■ Analog output	RIA45 – ******
Process display RIA251	Digital display device for looping into the 4 to 20 mA current loop.	RIA251 – **
Field display unit RIA16	Digital field display device for looping into the 4 to 20 mA current loop.	RIA16 – ***
Application Manager RMM621	Electronic recording, display, balancing, control, saving and event and alarm monitoring of analog and digital input signals. Values and conditions determined are output by means of analog and digital output signals. Remote transmission of alarms, input values and calculated values using a PSTN or GSM modem.	RMM621 – **********

8.3 Communication-specific accessories

Accessory	Description	Order code
HART Communicator Field Xpert SFX 100	Handheld terminal for remote configuration and for obtaining measured values via the HART current output (4 to 20 mA) and FOUNDATION Fieldbus. Contact your Endress+Hauser representative for more information.	SFX100 – *******
Fieldgate FXA320	Gateway for remote interrogation of HART sensors and actuators via Web browser: ■ 2-channel analog input (4 to 20 mA) ■ 4 binary inputs with event counter function and frequency measurement ■ Communication via modem, Ethernet or GSM ■ Visualization via Internet/Intranet in Web browser and/or WAP cellular phone ■ Limit value monitoring with alarm by e-mail or SMS ■ Synchronized time stamping of all measured values.	FXA320 – *****
Fieldgate FXA520	Gateway for remote interrogation of HART sensors and actuators via Web browser: ■ Web server for remote monitoring of up to 30 measuring points ■ Intrinsically safe version [EEx ia]IIC for applications in hazardous areas ■ Communication via modem, Ethernet or GSM ■ Visualization via Internet/Intranet in Web browser and/or WAP cellular phone ■ Limit value monitoring with alarm by e-mail or SMS ■ Synchronized time stamping of all measured values ■ Remote diagnosis and remote configuration of connected HART devices	FXA520 – ****
FXA195	The Commubox FXA195 connects intrinsically safe Smart transmitters with HART protocol to the USB port of a personal computer. This makes the remote operation of the transmitters possible with the aid of configuration programs (e.g. FieldCare). Power is supplied to the Commubox by means of the USB port	FXA195 – *

8.4 Service-specific accessories

Accessory	Description	Order code
Applicator	Software for selecting and planning flowmeters. The Applicator software can be downloaded from the Internet or ordered on CD-ROM for installation on a local PC. Contact your Endress+Hauser representative for more information.	DXA80 – *
Fieldcheck	Tester/simulator for testing flowmeters in the field. When used in conjunction with the "FieldCare" software package, test results can be imported into a database, printed out and used for official certification. Contact your Endress+Hauser representative for more information.	50098801
FieldCare	FieldCare is Endress+Hauser's FDT-based asset management tool. It can configure all intelligent field units in your system and helps you manage them. By using status information, it is also a simple but effective way of checking their status and condition.	See the product page on the Endress+Hauser Web site: www.endress.com
Memograph M graphic display recorder	The Memograph M graphic display recorder provides information on all the relevant process variables. Measured values are recorded correctly, limit values are monitored and measuring points analyzed. The data are stored in the 256 MB internal memory and also on a DSD card or USB stick. Memograph M boasts a modular design, intuitive operation and a comprehensive security concept. The ReadWin® 2000 PC software is part of the standard package and is used for configuring, visualizing and archiving the data captured. The mathematics channels which are optionally available enable continuous monitoring of specific power consumption, boiler efficiency and other parameters which are important for efficient energy management.	RSG40 – **********
FXA193	Service interface from the device to the PC for operation via FieldCare.	FXA193 – *

9 Troubleshooting

9.1 Troubleshooting instructions

Always start troubleshooting with the checklist below if faults occur after start-up or during operation. The routine takes you directly to the cause of the problem and the appropriate remedial measures.

Check the display	
No display visible and no output signals present.	1. Check the supply voltage → terminals 1, 2 2. Check the power line fuse → 📄 92 85 to 260 V AC: 0.8 A slow-blow / 250 V 20 to 55 V AC / 16 to 62 V DC: 2 A slow-blow / 250 V 3. Measuring electronics defective → order spare parts → 📄 77
No display visible, but output signals are present.	1. Check whether the ribbon-cable connector of the display module is correctly plugged into the amplifier board → 📄 88 2. Display module defective → order spare parts → 📄 77 3. Measuring electronics defective → order spare parts → 📄 77
Display texts are in a foreign language.	Switch off power supply. Press and hold down both the ⊞ buttons and switch on the measuring device. The display text will appear in English (default) and is displayed at maximum contrast.
Measured value indicated, but no signal at the current or pulse output.	Electronics board defective → order spare parts → 📄 77
↓	
Error messages on display	
Errors which occur during commissioning or measuring operation are displayed immediately. Error messages consist of a variety of icons: the meanings of these icons are as follows (example): – Error type: **S** = system error, **P** = process error – Error message type: ϟ = fault message, **!** = notice message – **EMPTY PIPE** = Type of error, e.g. measuring tube is only partly filled or completely empty – **03:00:05** = duration of error occurrence (in hours, minutes and seconds) – **#**401 = error number ☞ Caution! ▪ See the information on → 📄 62! ▪ The measuring system interprets simulations and positive zero return as system errors, but displays them as notice message only.	
Error number: No. 001 – 399 No. 501 – 699	System error (device error) has occurred → 📄 81
Error number: No. 401 - 499	Process error (application error) has occurred → 📄 83
↓	
Other error (without error message)	
Some other error has occurred.	Diagnosis and rectification → 📄 84

9.2 System error messages

Serious system errors are **always** recognized by the device as "Fault message", and are shown as a lightning flash (ϟ) on the display. Fault messages immediately affect the outputs.

Caution!
In the event of a serious fault, a flowmeter might have to be returned to the manufacturer for repair. The necessary procedures on → 🗎 6 must be carried out before you return a flowmeter to Endress+Hauser. Always enclose a duly completed "Declaration of Contamination" form. You will find a master copy of this form at the back of this manual.

Note!
Also observe the information on → 🗎 62.

No.	Error message / Type	Cause	Remedy (spare part → 🗎 87)
S = System error ϟ = Fault message (with an effect on the outputs) ! = Notice message (without an effect on the outputs)			
No. # 0xx → Hardware error			
001	S: CRITICAL FAILURE ϟ: # 001	Serious device error	Replace the amplifier board.
011	S: AMP HW EEPROM ϟ: # 011	Amplifier: Defective EEPROM	Replace the amplifier board.
012	S: AMP SW EEPROM ϟ: # 012	Amplifier: Error accessing EEPROM data	The EEPROM data blocks in which an error has occurred are displayed in the TROUBLESHOOTING function. Press Enter to acknowledge the errors in question; default values are automatically inserted instead of the errored parameter values. Note! The measuring device has to be restarted if an error has occurred in a totalizer block (see error No. 111 / CHECKSUM TOTAL).
031	S: SENSOR HW DAT ϟ: # 031	1. S-DAT is not plugged into the amplifier board correctly (or is missing). 2. S-DAT is defective.	1. Check whether the S-DAT is correctly plugged into the amplifier board. 2. Replace the S-DAT if it is defective. Check that the new replacement DAT is compatible with the measuring electronics. Check the: – Spare part set number – Hardware revision code 3. Replace measuring electronics boards if necessary. 4. Plug the S-DAT into the amplifier board.
032	S: SENSOR SW DAT ϟ: # 032		
No. # 1xx → Software error			
101	S: GAIN ERROR AMP ϟ: # 101	Gain deviation compared to reference gain > 25%.	Replace the amplifier board.
111	S: CHECKSUM TOTAL ϟ: # 111	Totalizer checksum error.	1. Restart the measuring device. 2. Replace the amplifier board if necessary.
121	S: A / C COMPATIB. !: # 121	Due to different software versions, I/O board and amplifier board are only partially compatible (possibly restricted functionality). Note! – This message is only listed in the error history. – Nothing is shown on the display.	Module with lower software version has either to be updated by FieldCare with the required software version or the module has to be replaced.
No. # 2xx → Error in DAT / no communication			
251	S: COMMUNICATION I/O ϟ: # 251	Internal communication fault on the amplifier board.	Replace the amplifier board.
261	S: COMMUNICATION I/O ϟ: # 261	No data reception between amplifier and I/O board or faulty internal data transfer.	Check the BUS contacts.

No.	Error message / Type	Cause	Remedy (spare part → 🗎 87)
No. # 3xx → System limits exceeded			
321	S: TOL. COIL CURR. ϟ: # 321	Sensor: Coil current is out of tolerance.	⚠ Warning! Switch off power supply before manipulating the coil current cable, coil current cable connector or measuring electronics boards! Remote version: 1. Check wiring of terminals 41/42 → 🗎 44 2. Check coil current cable connector. Compact and remote version: Replace measuring electronics boards if necessary
339 to 342	S: STACK CUR OUT n !: # 339 to 342	The temporarily buffered flow portions (measuring mode for pulsating flow) could not be cleared or output within 60 seconds.	1. Change the upper or lower limit setting, as applicable. 2. Increase or reduce flow, as applicable. Recommendations in the event of fault category = FAULT MESSAGE (ϟ) ■ Configure the fault response of the output to "ACTUAL VALUE" so that the temporary buffer can be cleared. ■ Clear the temporary buffer by the measures described under Item 1.
343 to 346	S: STACK FREQ. OUT n !: # 343 to 346		
347 to 350	S: STACK PULSE OUT n !: # 343 to 346	The temporarily buffered flow portions (measuring mode for pulsating flow) could not be cleared or output within 60 seconds.	1. Increase the setting for pulse weighting 2. Increase the max. pulse frequency if the totalizer can handle a higher number of pulses. 3. Increase or reduce flow, as applicable. Recommendations in the event of fault category = FAULT MESSAGE (ϟ) ■ Configure the fault response of the output to "ACTUAL VALUE" so that the temporary buffer can be cleared. ■ Clear the temporary buffer by the measures described under Item 1.
351 to 354	S: CURRENT RANGE n !: # 351 to 354	Current output: flow is out of range.	1. Change the upper or lower limit setting, as applicable. 2. Increase or reduce flow, as applicable.
355 to 358	S: FREQ. RANGE n !: # 355 to 358	Frequency output: flow is out of range.	1. Change the upper or lower limit setting, as applicable. 2. Increase or reduce flow, as applicable.
359 to 362	S: PULSE RANGE !: # 359 to 362	Pulse output: the pulse output frequency is out of range.	1. Increase the setting for pulse weighting 2. When selecting the pulse width, choose a value that can still be processed by a connected counter (e.g. mechanical counter, PLC etc.). *Determine the pulse width:* – Variant 1: Enter the minimum duration that a pulse must be present at the connected counter to ensure its registration. – Variant 2: Enter the maximum (pulse) frequency as the half "reciprocal value" that a pulse must be present at the connected counter to ensure its registration. Example: The maximum input frequency of the connected counter is 10 Hz. The pulse width to be entered is: $\frac{1}{2 \cdot 10\ \text{Hz}} = 50\ \text{ms}$ a0004437 3. Reduce flow.

No.	Error message / Type	Cause	Remedy (spare part → 🗎 87)
No. # 5xx → Application error			
501	S: SW.-UPDATE ACT. !: # 501	New amplifier or communication (I/O module) software version is loaded. Currently no other functions are possible.	Wait until the procedure is finished. The device will restart automatically.
502	S: UP-/DOWNLOAD ACT !: # 502	Uploading or downloading the device data via operating program. Currently no other functions are possible.	Wait until the procedure is finished.
No. # 6xx → Simulation mode active			
601	S: POS. ZERO-RETURN !: # 601	Positive zero return active ☝ Caution! This message has the highest display priority!	Switch off positive zero return
611 to 614	S: SIM. CURR. OUT. n !: # 611 to 614	Simulation current output active	
621 to 624	S: SIM. FREQ. OUT. n !: # 621 to 624	Simulation frequency output active	Switch off simulation
631 to 634	S: SIM. PULSE n !: # 631 to 634	Simulation pulse output active	Switch off simulation
641 to 644	S: SIM. STAT. OUT n !: # 641 to 644	Simulation status output active	Switch off simulation
671 to 674	S: SIM. STATUS IN n !: # 671 to 674	Simulation status input active	Switch off simulation
691	S: SIM. FAILSAFE !: # 691	Simulation of response to error (outputs) active	Switch off simulation
692	S: SIM. MEASURAND !: # 692	Simulation of a measured variable active (e.g. mass flow).	Switch off simulation
698	S: DEV. TEST ACT. !: # 698	The measuring device is being checked on site via the test and simulation device.	–

9.3 Process error messages

✎ Note!
Also observe the information on → 🗎 62.

No.	Error message / Type	Cause	Remedy (spare part → 🗎 87)
P = Process error ϟ = Fault message (with an effect on the outputs) ! = Notice message (without an effect on the outputs)			
401	EMPTY PIPE ϟ: # 401	Measuring tube partially filled or empty	1. Check the process conditions of the plant 2. Fill the measuring tube
461	ADJ. NOT OK !: # 461	EPD calibration not possible because the fluid's conductivity is either too low or too high.	The EPD function cannot be used with fluids of this nature.
463	FULL = EMPTY ϟ: # 463	The EPD calibration values for empty pipe and full pipe are identical, therefore incorrect.	Repeat calibration, making sure procedure is correct → 🗎 74.

9.4 Process errors without messages

Symptoms	Rectification
Remark: You may have to change or correct certain settings in functions in the function matrix in order to rectify the fault.	
Flow values are negative, even though the fluid is flowing forwards through the pipe.	1. Remote version: – Switch off the power supply and check the wiring → 📄 44 – If necessary, reverse the connections at terminals 41 and 42 2. Change the setting in the "INSTALLATION DIRECTION SENSOR" function accordingly
Measured-value reading fluctuates even though flow is steady.	1. Check grounding and potential equalization → 📄 54 2. Check the fluid for presence of gas bubbles. 3. In the "SYSTEM DAMPING" function → increase the value
Measured-value reading shown on display, even though the fluid is at a standstill and the measuring tube is full.	1. Check grounding and potential equalization → 📄 54 2. Check the fluid for presence of gas bubbles. 3. Activate the "LOW FLOW CUTOFF" function, i.e. enter or increase the value for the switching point.
Measured-value reading on display, even though measuring tube is empty.	1. Perform empty-pipe/full-pipe adjustment and then switch on Empty Pipe detection → 📄 74 2. Remote version: Check the terminals of the EPD cable → 📄 44 3. Fill the measuring tube.
The current output signal is always 4 mA, irrespective of the flow signal at any given time.	1. Select the "BUS ADDRESS" function and change the setting to "0". 2. Value for creepage too high. Reduce the value in the "LOW FLOW CUTOFF" function.
The fault cannot be rectified or some other fault not described above has arisen. In these instances, please contact your Endress+Hauser service organization.	The following options are available for tackling problems of this nature: **Request the services of an Endress+Hauser service technician** If you contact our service organization to have a service technician sent out, please be ready to quote the following information: – Brief description of the fault – Nameplate specifications (→ 📄 7): order code, serial number **Returning devices to Endress+Hauser** The necessary procedures (→ 📄 6) must be carried out before you return a flowmeter requiring repair or calibration to Endress+Hauser. Always enclose a duly completed "Declaration of Conformity" form with the flowmeter. You will find a master copy of this form at the back of this manual. **Replace transmitter electronics** Components in the measuring electronics defective → order spare parts → 📄 77

9.5 Response of outputs to errors

Note!
The failsafe mode of totalizers, current, pulse and frequency outputs can be customized by means of various functions in the function matrix. You will find detailed information on these procedures in the "Description of Device Functions" manual.

You can use positive zero return to set the signals of the current, pulse and status outputs to their fallback value, for example when measuring has to be interrupted while a pipe is being cleaned. This function takes priority over all other device functions: simulations, for example, are suppressed.

Failsafe mode of outputs and totalizers		
	Process/system error is current	Positive zero return is activated
Caution! System or process errors defined as "Notice messages" have no effect whatsoever on the inputs and outputs. See the information on → 65		
Current output	MINIMUM VALUE 0–20 mA → 0 mA 4–20 mA → 2 mA 4–20 mA HART → 2 mA 4–20 mA NAMUR →3.5 mA 4–20 mA HART NAMUR →3.5 mA 4–20 mA US → 3.75 mA 4–20 mA HART US → 3,75 mA 0–20 mA (25 mA) → 0 mA 4–20 mA (25 mA) → 2 mA 4–20 mA (25 mA) HART → 2 mA MAXIMUM VALUE 0–20 mA → 22 mA 4–20 mA → 22 mA 4–20 mA HART → 22 mA 4–20 mA NAMUR → 22.6 mA 4–20 mA HART NAMUR → 22.6 mA 4–20 mA US → 22.6 mA 4–20 mA HART US → 22.6 mA 0–20 mA (25 mA) → 25 mA 4–20 mA (25 mA) → 25 mA 4–20 mA (25 mA) HART → 25 mA HOLD VALUE Last valid value (preceding occurrence of the fault) is output. ACTUAL VALUE Measured value display on the basis of the current flow measurement. The fault is ignored.	Output signal corresponds to "zero flow"
Pulse output	MIN/MAX VALUE → FALLBACK VALUE Signal output → no pulses HOLD VALUE Last valid value (preceding occurrence of the fault) is output. ACTUAL VALUE Fault is ignored, i.e. normal measured-value output on the basis of ongoing flow measurement.	Output signal corresponds to "zero flow"

Failsafe mode of outputs and totalizers		
	Process/system error is current	Positive zero return is activated
Frequency output	*FALLBACK VALUE* Signal output → 0 Hz *FAILSAFE LEVEL* Output of the frequency specified in the FALÌLSAFE VALUE function. *HOLD VALUE* Measured value display on the basis of the last saved value preceding occurrence of the fault. *ACTUAL VALUE* Measured value display on the basis of the current flow measurement. The fault is ignored.	Output signal corresponds to "zero flow"
Totalizer	*STOP* The totalizers are paused until the error is rectified. *ACTUAL VALUE* The fault is ignored. The totalizer continues to count in accordance with the current flow value. *HOLD VALUE* The totalizer continues to count the flow in accordance with the last valid flow value (before the error occurred).	Totalizer stops
Status output	In the event of a fault or power supply failure: Status output → non-conductive	No effect on status output

9.6 Spare parts

Detailed troubleshooting instructions are provided in the previous sections → 80
The measuring device, moreover, provides additional support in the form of continuous self-diagnosis and error messages.
Fault rectification can entail replacing defective components with tested spare parts. The illustration below shows the available scope of spare parts.

Note!
You can order spare parts directly from your Endress+Hauser service organization by providing the serial number printed on the transmitter's nameplate → 7

Spare parts are shipped as sets comprising the following parts:
- Spare part
- Additional parts, small items (threaded fasteners, etc.)
- Mounting instructions
- Packaging

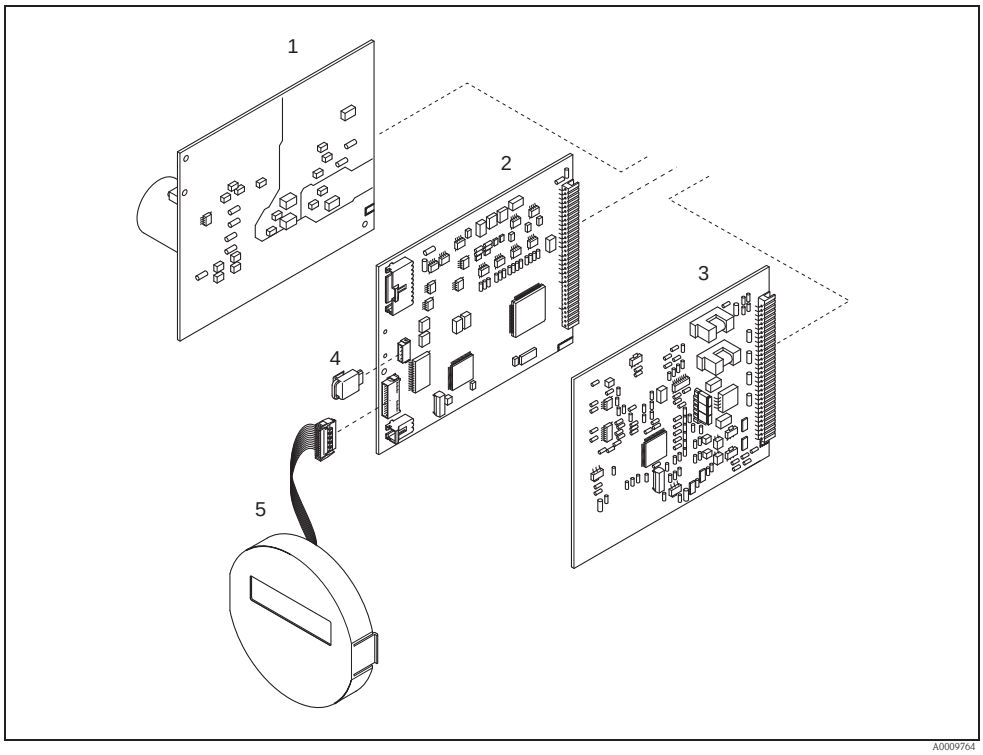

Fig. 52: Spare parts for Promag 50 transmitter (field and wall-mounted housings)

1 Power unit board (85 to 260 V AC, 20 to 55 V AC, 16 to 62 V DC)
2 Amplifier board
3 I/O board (COM module)
4 HistoROM / S-DAT (sensor data memory)
5 Display module

9.6.1 Removing and installing printed circuit boards

Field housing: removing and installing printed circuit boards → **53**

Warning!
- Risk of electric shock!
  Exposed components carry dangerous voltages. Make sure that the power supply is switched off before you remove the cover of the electronics compartment.
- Risk of damaging electronic components (ESD protection). Static electricity can damage electronic components or impair their operability. Use a workplace with a grounded working surface purpose-built for electrostatically sensitive devices!
- If you cannot guarantee that the dielectric strength of the device is maintained in the following steps, then an appropriate inspection must be carried out in accordance with the manufacturer's specifications.
- When connecting Ex-certified devices, see the notes and diagrams in the Ex-specific supplement to these Operating Instructions.

Caution!
Use only original Endress+Hauser parts.

1. Switch off power supply.
2. Unscrew cover of the electronics compartment from the transmitter housing.
3. Remove the local display (1) as follows:
   – Press in the latches (1.1) at the side and remove the display module.
   – Disconnect the ribbon cable (1.2) of the display module from the amplifier board.
4. Remove the screws and remove the cover (2) from the electronics compartment.
5. Remove the boards (4, 6): Insert a suitable tool into the hole (3) provided for the purpose and pull the board clear of its holder.
6. Remove amplifier board (5):
   – Disconnect the plug of the electrode signal cable (5.1) including S-DAT (5.3) from the board.
   – Loosen the plug locking of the coil current cable (5.2) and gently disconnect the plug from the board, i.e. without moving it to and fro.
   – Insert a thin pin into the hole (3) provided for the purpose and pull the board clear of its holder.
7. Installation is the reverse of the removal procedure.

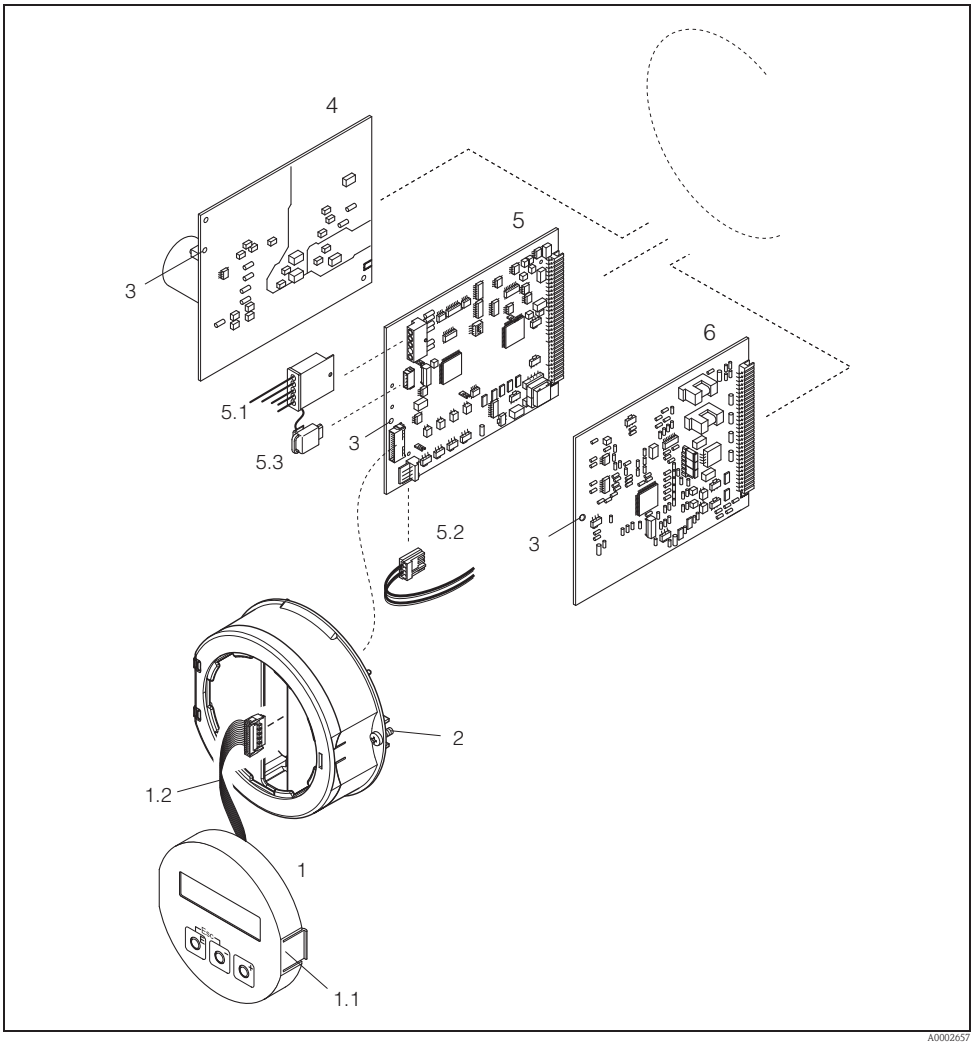

Fig. 53: Field housing: removing and installing printed circuit boards

1 Local display
1.1 Latch
1.2 Ribbon cable (display module)
2 Screws of electronics compartment cover
3 Aperture for installing/removing boards
4 Power supply board
5 Amplifier board
5.1 Electrode signal cable (sensor)
5.2 Coil current cable (sensor)
5.3 Histo-ROM / S-DAT (sensor data memory)
6 I/O board

Wall-mount housing: removing and installing printed circuit boards → 🗎 91

Warning!
- Risk of electric shock!
  Exposed components carry dangerous voltages. Make sure that the power supply is switched off before you remove the cover of the electronics compartment.
- Risk of damaging electronic components (ESD protection). Static electricity can damage electronic components or impair their operability. Use a workplace with a grounded working surface purpose-built for electrostatically sensitive devices!
- If you cannot guarantee that the dielectric strength of the device is maintained in the following steps, then an appropriate inspection must be carried out in accordance with the manufacturer's specifications.
- When connecting Ex-certified devices, see the notes and diagrams in the Ex-specific supplement to these Operating Instructions.

Caution!
Use only original Endress+Hauser parts.

1. Switch off power supply.
2. Remove the screws and open the hinged cover (1) of the housing. Remove screws of the electronics module (2).
3. Then push up electronics module and pull it as far as possible out of the wall-mounted housing.
4. Disconnect the following cable plugs from amplifier board (7):
   – Electrode signal cable plug (7.1) including S-DAT (7.3).
   – Plug of coil current cable (7.2). To do so, loosen the plug locking of the coil current cable and gently disconnect the plug from the board, i.e. without moving it to and fro.
   – Ribbon cable plug (3) of the display module.
5. Remove the screws and remove the cover (4) from the electronics compartment.
6. Remove the boards (6, 7, 8): Insert a suitable tool into the hole (5) provided for the purpose and pull the board clear of its holder.
7. Installation is the reverse of the removal procedure.

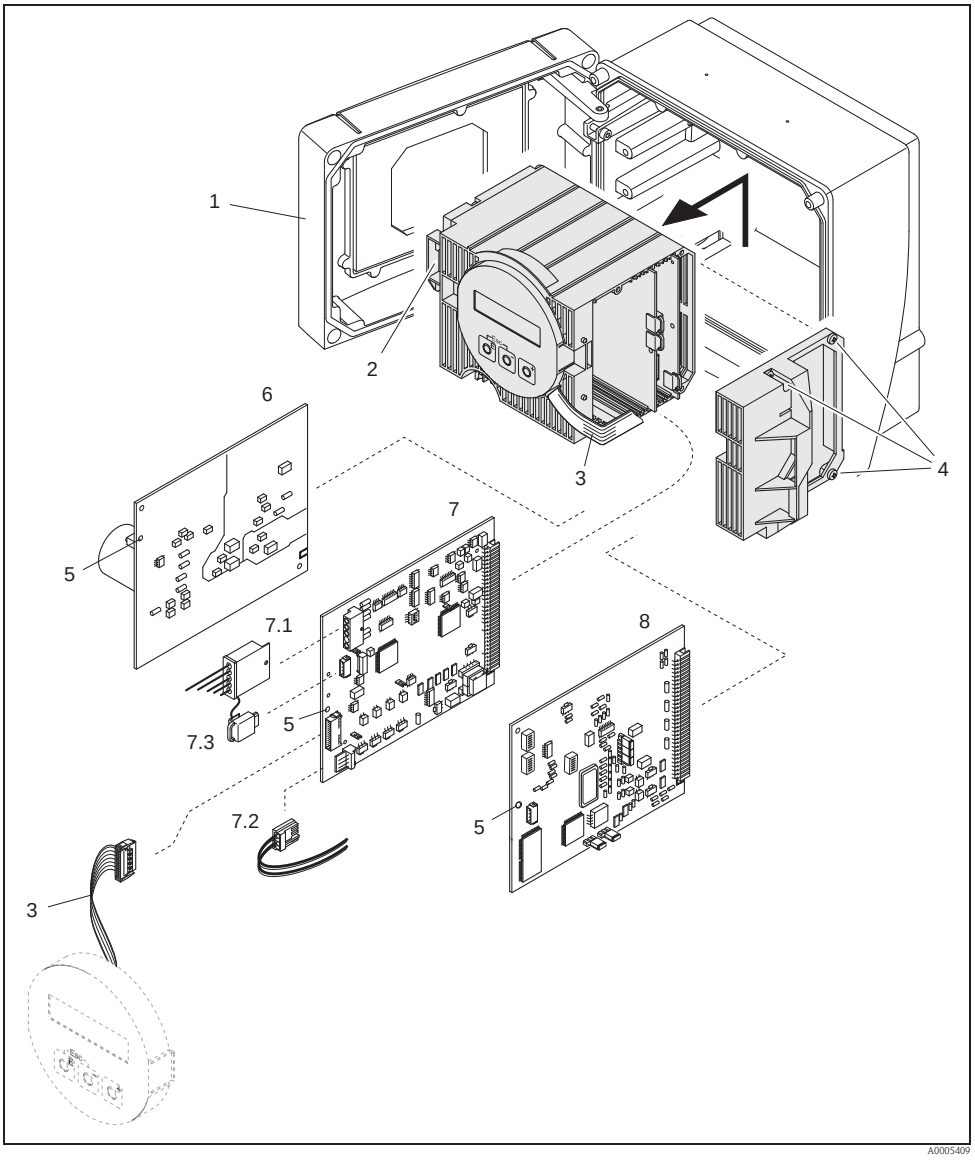

Fig. 54: Wall-mount housing: removing and installing printed circuit boards

1 Housing cover
2 Electronics module
3 Ribbon cable (display module)
4 Cover of electronics compartment (3 screws)
5 Aperture for installing/removing boards
6 Power supply board
7 Amplifier board
7.1 Electrode signal cable (sensor)
7.2 Coil current cable (sensor)
7.3 Histo-ROM / S-DAT (sensor data memory)
8 I/O board

9.6.2 Replacing the device fuse

Warning!
Risk of electric shock! Exposed components carry dangerous voltages. Make sure that the power supply is switched off before you remove the cover of the electronics compartment.

The main fuse is on the power supply board (→ 92).
The procedure for replacing the fuse is as follows:

1. Switch off power supply.
2. Remove the power supply board: field housing → 88, wall-mount housing → 90
3. Remove cap (1) and replace the device fuse (2).
   Use only fuses of the following type:
   – Power supply 20 to 55 V AC / 16 to 62 V DC → 2.0 A slow-blow / 250 V; 5.2 × 20 mm
   – Power supply 85 to 260 V AC → 0.8 A slow-blow / 250 V; 5.2 × 20 mm
   – Ex-rated devices → see the Ex documentation.
4. Installation is the reverse of the removal procedure.

Caution!
Use only original Endress+Hauser parts.

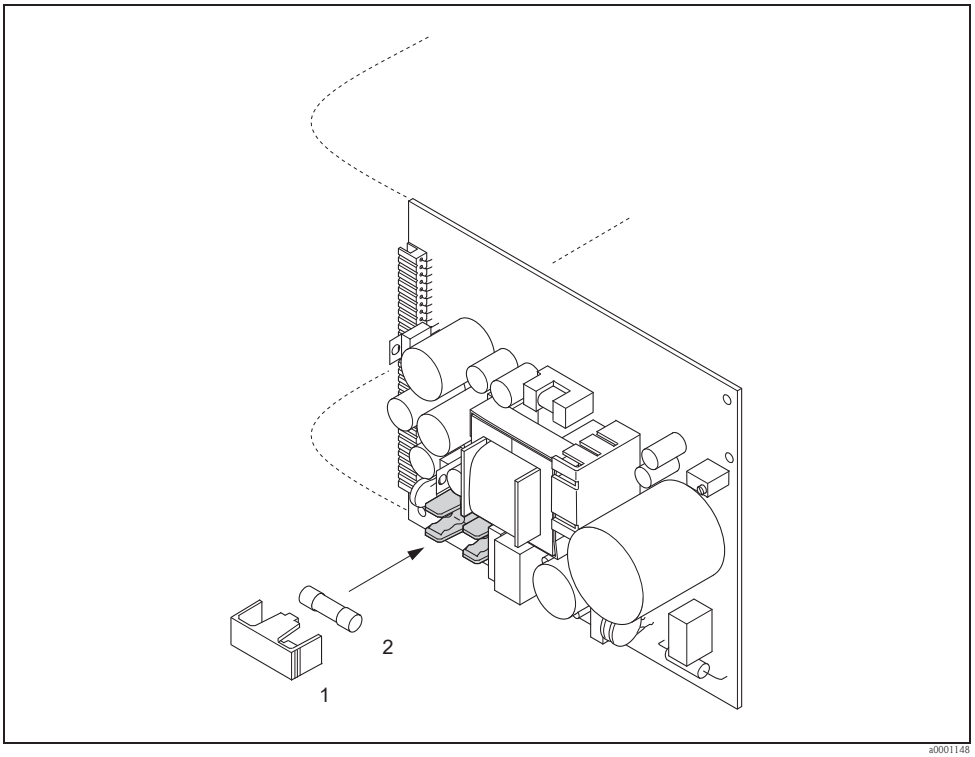

Fig. 55: Replacing the device fuse on the power supply board

1 Protective cap
2 Device fuse

9.6.3 Replacing the exchangeable electrode

The Promag W sensor (DN 350 to 2000; 14" to 78") is available with exchangeable measuring electrodes as an option. This design permits the measuring electrodes to be replaced or cleaned under process conditions.

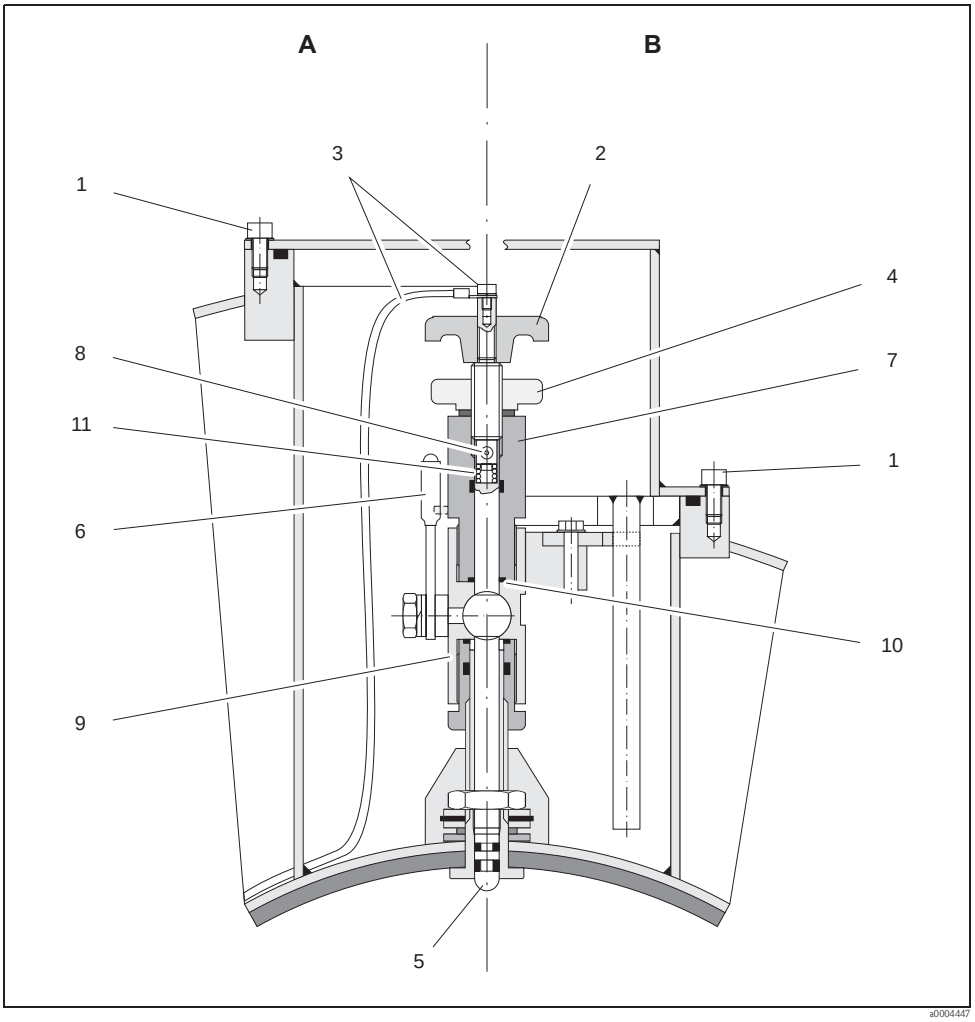

Fig. 56: Apparatus for replacing exchangeable measuring electrodes

View A = DN 1200 to 2000 (48" to 78")

View B = DN 350 to 1050 (14" to 42")

1 Allen screw
2 Handle
3 Electrode cable
4 Knurled nut (locknut)
5 Measuring electrode
6 Stop cock (ball valve)
7 Retaining cylinder
8 Locking pin (for handle)
9 Ball-valve housing
10 Seal (retaining cylinder)
11 Coil spring

Removing the electrode	Installing the electrode
1 Loosen Allen screw (1) and remove the cover.	1 Insert new electrode (5) into retaining cylinder (7) from below. Make sure that the seals at the tip of the electrode are clean.
2 Remove electrode cable (3) secured to handle (2).	2 Mount handle (2) on the electrode and insert locking pin (8) to secure it in position. Caution! Make sure that coil spring (11) is inserted. This is essential to ensure correct electrical contact and correct measuring signals.
3 Loosen knurled nut (4) by hand. This knurled nut acts as a locknut.	3 Pull the electrode back until the tip of the electrode no longer protrudes from retaining cylinder (7).
4 Remove electrode (5) by turning handle (2). The electrode can now be pulled out of retaining cylinder (7) as far as a defined stop. Warning! Risk of injury. Under process conditions (pressure in the piping system) the electrode can recoil suddenly against its stop. Apply counter-pressure while releasing the electrode.	4 Screw the retaining cylinder (7) onto ball-valve housing (9) and tighten it by hand. Seal (10) on the cylinder must be correctly seated and clean. Note! Make sure that the rubber hoses on retaining cylinder (7) and stop cock (6) are of the same color (red or blue).
5 Close stop cock (6) after pulling out the electrode as far as it will go. Warning! Do not subsequently open the stop cock, in order to prevent fluid escaping.	5 Open stop cock (6) and turn handle (2) to screw the electrode all the way into the retaining cylinder.
6 Remove the electrode complete with retaining cylinder (7).	6 Screw knurled nut (4) onto the retaining cylinder. This firmly locates the electrode in position.
7 Remove handle (2) from electrode (5) by pressing out locking pin (8). Take care not to lose coil spring (11).	7 Use the Allen screw to secure electrode cable (3) to handle (2). Caution! Make sure that the machine screw securing the electrode cable is firmly tightened. This is essential to ensure correct electrical contact and correct measuring signals.
8 Remove the old electrode and insert the new electrode. Replacement electrodes can be ordered separately from Endress+Hauser.	8 Reinstall the cover and tighten Allen screw (a).

9.7 Return

Caution!
Do not return a measuring device if you are not absolutely certain that all traces of hazardous substances have been removed, e.g. substances which have penetrated crevices or diffused through plastic.
Costs incurred for waste disposal and injury (burns, etc.) due to inadequate cleaning will be charged to the owner-operator.

The following steps must be taken before returning a flow measuring device to Endress+Hauser, e.g. for repair or calibration:
- Always enclose a duly completed "Declaration of contamination" form. Only then can Endress+Hauser transport, examine and repair a returned device.
- Enclose special handling instructions if necessary, for example a safety data sheet as per EC REACH Regulation No. 1907/2006.
- Remove all residues. Pay special attention to the grooves for seals and crevices which could contain residues. This is particularly important if the substance is hazardous to health, e.g. flammable, toxic, caustic, carcinogenic, etc.

Note!
You will find a preprinted "Declaration of contamination" form at the back of these Operating Instructions.

9.8 Disposal

Observe the regulations applicable in your country!

9.9 Software history

Date	Software version	Changes to software	Operating Instructions
11.2009	Amplifier: V 2.03.XX	Introduction of Calf history	71106181 / 12.09 71105332 / 11.09
06.2009	Amplifier: V 2.02.XX	Introduction of Promag L	71095684 / 06.09
03.2009	Amplifier: V 2.02.XX	Introduction of Promag D Introduction of new nominal diameter	71088677 / 03.09
11.2004	Amplifier: 1.06.01 Communication module: 1.04.00	Software update relevant only for production	50097089 / 10.03
10.2003	Amplifier: 1.06.00 Communication module: 1.03.00	Software expansion: ■ Language groups ■ Flow direction pulse output selectable New functionalities: ■ Second Totalizer ■ Adjustable backlight (display) ■ Operation hours counter ■ Simulation function for pulse output ■ Counter for access code ■ Reset function (fault history) ■ Up-/download with FieldTool	50097089 / 10.03

Date	Software version	Changes to software	Operating Instructions
08.2003	Communication module: 1.02.01	Software expansion: ■ New / revised functionalities New functionalities: ■ Current span NAMUR NE 43 ■ Failsafe mode function ■ Troubleshooting function ■ System and process error messages ■ Response of status output	50097089 / 08.03
08.2002	Amplifier: 1.04.00	Software expansion: ■ New / revised functionalities New functionalities: ■ Current span NAMUR NE 43 ■ EPD (new mode) ■ Failsafe mode function ■ Acknowledge fault function ■ Troubleshooting function ■ System and process error messages ■ Response of status output	50097089 / 08.02
03.2002	Amplifier: 1.03.00	Software expansion: ■ Suitability for custody transfer measurement Promag 50/51	none
06.2001	Amplifier: 1.02.00 Communication module: 1.02.00	Software expansion: ■ New functionalities: New functionalities: ■ General device functions ■ "OED" software function ■ "Pulse width" software function	50097089 / 06.01
09.2000	Amplifier: 1.01.01 Communication module: 1.01.00	Software expansion: ■ Functional adaptations	none
08.2000	Amplifier: 1.01.00	Software expansion: ■ Functional adaptations	none
04.2000	Amplifier: 1.00.00 Communication module: 1.00.00	Original software Compatible with: ■ FieldTool ■ Commuwin II (version 2.05.03 and higher) ■ HART Communicator DXR 275 (from OS 4.6) with Rev. 1, DD1	50097089 / 04.00

Note!
Uploads or downloads between the individual software versions are only possible with a special service software.

10 Technical data

10.1 Technical data at a glance

10.1.1 Application

→ 📄 5

10.1.2 Function and system design

Measuring principle	Electromagnetic flow measurement on the basis of Faraday's Law.
Measuring system	→ 📄 7

10.1.3 Input

Measured variable	Flow velocity (proportional to induced voltage)
Measuring range	Typically v = 0.01 to 10 m/s (0.033 to 33 ft/s) with the specified accuracy
Operable flow range	Over 1000 : 1
Input signal	*Status input (auxiliary input)* ■ Galvanically isolated ■ U = 3 to 30 V DC ■ Ri = 5 kΩ ■ Can be configured for: totalizer reset, positive zero return, error message reset.

10.1.4 Output

Output signal	*Current output* ■ Galvanically isolated ■ Active/passive can be selected: – Active: 0/4 to 20 mA, R_L < 700 Ω (HART: R_L ≥ 250 Ω) – Passive: 4 to 20 mA, supply voltage V_S 18 to 30 V DC, R_i ≥150 Ω) ■ Time constant can be selected (0.01 to 100s) ■ Full scale value adjustable ■ Temperature coefficient: typ. 0.005% o.f.s./°C, resolution: 0.5 µA o.f.s. = of full scale value *Pulse/frequency output* ■ Galvanically isolated ■ Passive: 30 V DC / 250 mA ■ Open collector ■ Can be configured as: – Pulse output Pulse value and pulse polarity can be selected, max. pulse width adjustable (0.5 to 2000 ms) – Frequency output Full scale frequency 2 to 1000 Hz (f_{max} = 1.25 Hz), on/off ratio 1:1, pulse width max. 10 s.

Signal on alarm	*Current output* Failsafe mode can be selected (e.g. in accordance with NAMUR Recommendation NE 43) *Pulse/frequency output* Failsafe mode can be selected *Status output* "Not conductive" in the event of fault or power supply failure
Load	See "Output signal"
Switching output	*Status output* ■ Galvanically isolated ■ Max. 30 V DC/250 mA ■ Open collector ■ Can be configured for: error messages, empty pipe detection (EPD), flow direction, limit values
Low flow cut off	Low flow cut off, switch-on point can be selected as required
Galvanic isolation	All circuits for inputs, outputs, and power supply are galvanically isolated from each other.

10.1.5 Power supply

Electrical connections	→ 📄 44
Supply voltage (power supply)	■ 85 to 260 V AC, 45 to 65 Hz ■ 20 to 55 V AC, 45 to 65 Hz ■ 16 to 62 V DC
Cable entry	*Power supply and signal cables (inputs/outputs):* ■ Cable entry M20 × 1.5 (8 to 12 mm/0.31 to 0.47 inch) ■ Sensor cable entry for armored cables M20 × 1.5 (9.5 to 16 mm / 0.37 to 0.63 inch) ■ Threads for cable entries ½" NPT, G ½" *Connecting cable for remote version:* ■ Cable entry M20 × 1.5 (8 to 12 mm/0.31 to 0.47 inch) ■ Sensor cable entry for armored cables M20 × 1.5 (9.5 to 16 mm / 0.37 to 0.63 inch) ■ Threads for cable entries ½" NPT, G ½"
Cable specifications	→ 📄 50
Power consumption	*Power consumption* ■ AC: <15 VA (incl. sensor) ■ DC: <15 W (incl. sensor) *Switch-on current* ■ Max 3 A (<5 ms) for 260 V AC ■ Max. 13.5 A (<5 ms) for 24 V DC
Power supply failure	■ Lasting min. 1 cycle frequency: ■ EEPROM saves measuring system data ■ S-DAT: exchangeable data storage chip which stores the data of the sensor (nominal diameter, serial number, calibration factor, zero point etc.)
Potential equalization	→ 📄 54

10.1.6 Performance characteristics

Reference operating conditions

To DIN EN 29104 and VDI/VDE 2641:

- Fluid temperature: +28 °C ± 2 K
- Ambient temperature: +22 °C ± 2 K
- Warm-up period: 30 minutes

Installation:

- Inlet run >10 × DN
- Outlet run > 5 × DN
- Sensor and transmitter grounded.
- The sensor is centered in the pipe.

Maximum measured error

- Current output: plus typically ± 5 µA
- Pulse output: ± 0.5% o.r. ± 1 mm/s
  Option: ± 0.2% o.r. ± 2 mm/s (o.r. = of reading)
  (o.r. = of reading)

Fluctuations in the supply voltage do not have any effect within the specified range.

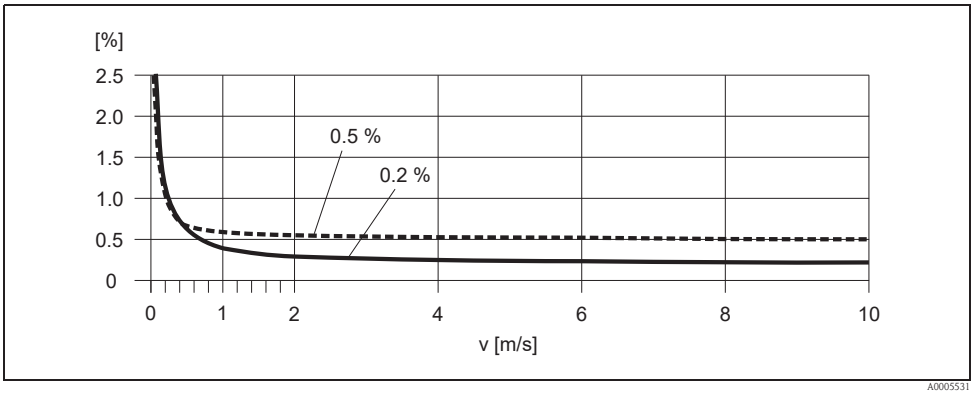

Fig. 57: Max. measured error in % of reading

Repeatability

Max. ± 0.1% o.r. ± 0.5 mm/s (o.r. = of reading)

10.1.7 Operating conditions: Installation

Installation instructions

Any orientation (vertical, horizontal), restrictions and installation instructions → 13

Inlet and outlet run

If possible, install the sensor upstream from fittings such as valves, T-pieces, elbows, etc. The following inlet and outlet runs must be observed in order to meet accuracy specifications (→ 16, → 12):

- Inlet run: ≥ 5 × DN
- Outlet run: ≥ 2 × DN

Adapters

→ 17

Length of connecting cable

→ 20

10.1.8 Operating conditions: Environment

Ambient temperature range

- Transmitter:
  – Standard: –20 to +60 °C (–4 to +140 °F)
  – Optional: –40 to +60 °C (–40 to +140 °F)

  ✎ Note!
  At ambient temperatures below –20 (–4 °F) the readability of the display may be impaired.

- Sensor:
  – Flange material carbon steel: –10 to +60 °C (+14 to +140 °F)
  – Flange material stainless steel: –40 to +60 °C (–40 to +140 °F)

☞ Caution!
- The permitted temperature range of the measuring tube lining may not be undershot or overshot (→ "Operating conditions: Process" → "Medium temperature range").
- Install the device in a shady location. Avoid direct sunlight, particularly in warm climatic regions.
- The transmitter must be mounted separate from the sensor if both the ambient and fluid temperatures are high.

Storage temperature

The storage temperature corresponds to the operating temperature range of the measuring transmitter and the appropriate measuring sensors.

☞ Caution!
- The measuring device must be protected against direct sunlight during storage in order to avoid unacceptably high surface temperatures.
- A storage location must be selected where moisture does not collect in the measuring device. This will help prevent fungus and bacteria infestation which can damage the liner.

Degree of protection

- Standard: IP 67 (NEMA 4X) for transmitter and sensor
- Optional: IP 68 (NEMA 6P) for remote version of Promag L, W and P sensor.
  Promag L only with stainless steel flanges.

Shock and vibration resistance

Acceleration up to 2 g following IEC 60068-2-6
(high-temperature version: no data available)

CIP cleaning

☞ Caution!
The maximum fluid temperature permitted for the device may not be exceeded.

CIP cleaning is possible:
Promag P, Promag H

CIP cleaning is not possible:
Promag D, Promag L, Promag W

SIP cleaning

☞ Caution!
The maximum fluid temperature permitted for the device may not be exceeded.

SIP cleaning is possible:
Promag H

SIP cleaning is not possible:
Promag D, Promag L, Promag W, Promag P

Electromagnetic compatibility (EMC)

- As per IEC/EN 61326 and NAMUR Recommendation NE 21
- Emission: to limit value for industry EN 55011

10.1.9 Operating conditions: Process

Medium temperature range

The permissible temperature depends on the lining of the measuring tube

Promag D

0 to +60 °C (+32 to +140 °F) for polyamide

Promag L

- –20 to +50 °C (–4 to +122 °F) for polyurethane (DN 50 to 300)
- –20 to +90 °C (–4 to +194 °F) for PTFE (DN 50 to 300)

Promag W

- 0 to +80 °C (+32 to +176 °F) for hard rubber (DN 65 to 2000)
- –20 to +50 °C (–4 to +122 °F) for polyurethane (DN 25 to 1200)

Promag P

Standard
- –40 to +130 °C (–40 to +266 °F) for PTFE (DN 15 to 600 / 1/2" to 24"), Restrictions → see the following diagrams
- –20 to +130 °C (–4 to +266 °F) for PFA/HE (DN 25 to 200 / 1" to 8"), Restrictions → see the following diagrams
- –20 to +150 °C (–4 to +302 °F) for PFA (DN 25 to 200 / 1" to 8"), Restrictions → see the following diagrams

Optional
High-temperature version (HT): –20 to +180 °C (–4 to +356 °F) for PFA (DN 25 to 200 / 1" to 8")

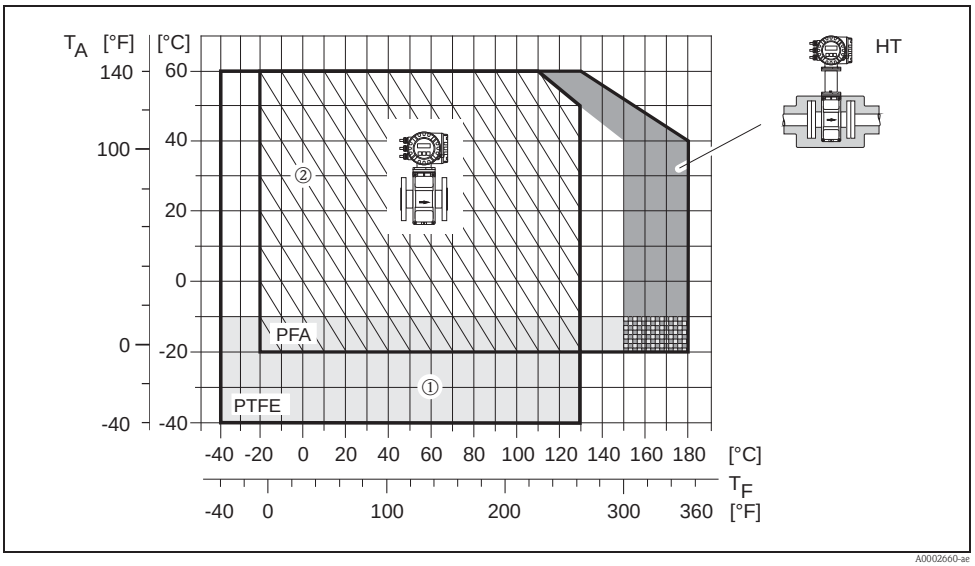

Abb. 58: Compact version Promag P (with PFA- or PTFE-lining)

T_A = ambient temperature; T_F = fluid temperature; HT = high-temperature version with insulation
① = light gray area → temperature range from –10 to –40 °C (–14 to –40 °F) is valid for stainless steel version only
② = diagonal hatched area → foam lining (HE) and degree of protection IP 68 = fluid temperature max. 130°C / 266 °F

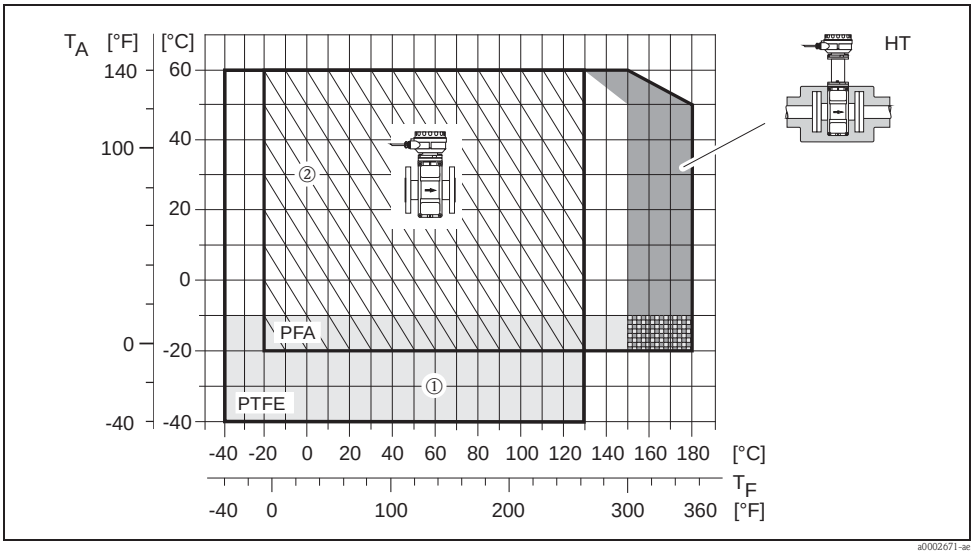

Abb. 59: Remote version Promag P (with PFA- or PTFE-lining)

T_A = ambient temperature; T_F = fluid temperature; HT = high-temperature version with insulation
① = light gray area → temperature range from –10 to –40 °C (–14 to –40 °F) is valid for stainless steel version only
② = diagonal hatched area → foam lining (HE) and degree of protection IP68 = fluid temperature max. 130°C / 266 °F

Promag H

Sensor:
- DN 2 to 25: –20 to +150 °C (–4 to +302 °F)
- DN 40 to 100: –20 to +150 °C (–4 to +302 °F)

Seals:
- EPDM: –20 to +150 °C (–4 to +302 °F)
- Silicone: –20 to +150 °C (–4 to +302 °F)
- Viton: –20 to +150 °C (–4 to +302 °F)
- Kalrez: –20 to +150 °C (–4 to +302 °F)

Conductivity

The minimum conductivity is ≥ 5 µS/cm (≥ 20 µS/cm for demineralized water)

Note!
Note that in the case of the remote version, the requisite minimum conductivity is also influenced by the length of the connecting cable → 📄 20

Medium pressure range (nominal pressure)

Promag D

- EN 1092-1 (DIN 2501)
  – PN 16
- ANSI B 16.5
  – Class 150
- JIS B2220
  – 10 K

Promag L

- EN 1092-1 (DIN 2501)
  – PN 10 (DN 50 to 300)
  – PN 16 (DN 50 to 150)
- EN 1092-1, lap joint flange, stampel plate
  – PN 10 (DN 50 to 300)
- ANSI B 16.5
  – Class 150 (2" to 12")

Promag W

- EN 1092-1 (DIN 2501)
  - PN 6 (DN 350 to 2000)
  - PN 10 (DN 200 to 2000)
  - PN 16 (DN 65 to 2000)
  - PN 25 (DN 200 to 1000)
  - PN 40 (DN 25 to 150)
- ANSI B 16.5
  - Class 150 (1" to 24")
  - Class 300 (1" to 6")
- AWWA
  - Class D (28" to 78")
- JIS B2220
  - 10 K (DN 50 to 300)
  - 20 K (DN 25 to 300)

- AS 2129
  - Table E (DN 80, 100, 150 to 1200)
- AS 4087
  - PN 16 (DN 80, 100, 150 to 1200)

Promag P

- EN 1092-1 (DIN 2501)
  - PN 10 (DN 200 to 600)
  - PN 16 (DN 65 to 600)
  - PN 25 (DN 200 to 600)
  - PN 40 (DN 15 to 150)
- ANSI B 16.5
  - Class 150 (½" to 24")
  - Class 300 (½" to 6")
- JIS B2220
  - 10 K (DN 50 to 300)
  - 20 K (DN 15 to 300)
- AS 2129
  - Table E (DN 25, 50)
- AS 4087
  - PN 16 (DN 50)

Promag H

The permissible nominal pressure depends on the process connection and the seal:
- 40 bar → flange, weld nipple (with O-ring seal)
- 16 bar → all other process connections

Pressure tightness

Promag D

Measuring tube: 0 mbar abs (0 psi abs) with a fluid temperature of ≤ 60 °C (≤ 140 °F)

Promag L (Measuring tube lining: Polyurethane)

Promag L Nominal diameter		Resistance of measuring tube lining to partial vacuum Limit values for abs. pressure [mbar] ([psi]) at various fluid temperatures		
		25 °C	50 °C	80° C
[mm]	[inch]	77 °F	122 °F	176° F
50 to 300	2 to 12"	0	0	–

Promag L
Measuring tube lining: PTFE

Promag L Nominal diameter		Resistance of measuring tube lining to partial vacuum Limit values for abs. pressure [mbar] ([psi]) at various fluid temperatures			
		25 °C		90 °C	
		77 °F		194 °F	
[mm]	[inch]	[mbar]	[psi]	[mbar]	[psi]
50	2"	0	0	0	0
65	–	0	0	40	0.58
80	3"	0	0	40	0.58
100	4"	0	0	135	1.96
125	–	135	1.96	240	3.48
150	6"	135	1.96	240	3.48
200	8"	200	2.90	290	4.21
250	10"	330	4.79	400	5.80
300	12"	400	5.80	500	7.25

Promag W

Promag W Nominal diameter		Measuring tube lining	Resistance of measuring tube lining to partial vacuum Limit values for abs. pressure [mbar] ([psi]) at various fluid temperatures						
			25 °C	50 °C	80° C	100 °C	130 °C	150 °C	180 °C
[mm]	[inch]		77 °F	122 °F	176° F	212 °F	266 °F	302 °F	356 °F
25 to 1200	1 to 48"	Polyurethane	0	0	–	–	–	–	–
65 to 2000	3 to 78"	Hard rubber	0	0	0	–	–	–	–

Promag P
Measuring tube lining: PFA

Promag P Nominal diameter		Resistance of measuring tube lining to partial vacuum Limit values for abs. pressure [mbar] ([psi]) at various fluid temperatures					
		25 °C	80° C	100 °C	130 °C	150 °C	180 °C
[mm]	[inch]	77 °F	176° F	212 °F	266 °F	302 °F	356 °F
25	1"	0	0	0	0	0	0
32	–	0	0	0	0	0	0
40	1 ½"	0	0	0	0	0	0
50	2"	0	0	0	0	0	0
65	–	0	*	0	0	0	0
80	3"	0	*	0	0	0	0
100	4"	0	*	0	0	0	0

Promag P Nominal diameter		Resistance of measuring tube lining to partial vacuum Limit values for abs. pressure [mbar] ([psi]) at various fluid temperatures					
		25 °C	80° C	100 °C	130 °C	150 °C	180 °C
[mm]	[inch]	77 °F	176° F	212 °F	266 °F	302 °F	356 °F
125	–	0	*	0	0	0	0
150	6"	0	*	0	0	0	0
200	8"	0	*	0	0	0	0
* No value can be quoted.							

Promag P
Measuring tube lining: PTFE

Promag P Nominal diameter		Resistance of measuring tube lining to partial vacuum Limit values for abs. pressure [mbar] ([psi]) at various fluid temperatures								
		25 °C		80° C	100 °C		130 °C		150 °C	180 °C
		77 °F		176° F	212 °F		266 °F		302 °F	356 °F
[mm]	[inch]	[mbar]	[psi]		[mbar]	[psi]	[mbar]	[psi]		
15	½"	0	0	0	0	0	100	1.45	–	–
25	1"	0	0	0	0	0	100	1.45	–	–
32	–	0	0	0	0	0	100	1.45	–	–
40	1 ½"	0	0	0	0	0	100	1.45	–	–
50	2"	0	0	0	0	0	100	1.45	–	–
65	–	0	0	*	40	0.58	130	1.89	–	–
80	3"	0	0	*	40	0.58	130	1.89	–	–
100	4"	0	0	*	135	1.96	170	2.47	–	–
125	–	135	1.96	*	240	3.48	385	5.58	–	–
150	6"	135	1.96	*	240	3.48	385	5.58	–	–
200	8"	200	2.90	*	290	4.21	410	5.95	–	–
250	10"	330	4.79	*	400	5.80	530	7.69	–	–
300	12"	400	5.80	*	500	7.25	630	9.14	–	–
350	14"	470	6.82	*	600	8.70	730	10.59	–	–
400	16"	540	7.83	*	670	9.72	800	11.60	–	–
450	18"	Partial vacuum is impermissible!								
500	20"									
600	24"									
* No value can be quoted.										

Promag H (Measuring tube lining: PFA)

Promag H Nominal diameter		Resistance of measuring tube lining to partial vacuum Limit values for abs. pressure [mbar] ([psi]) at various fluid temperatures					
		25 °C	80° C	100 °C	130 °C	150 °C	180 °C
[mm]	[inch]	77 °F	176° F	212 °F	266 °F	302 °F	356 °F
2 to 100	1/12 to 4"	0	0	0	0	0	0

Limiting flow

→ 18

Pressure loss

- No pressure loss if the sensor is installed in a pipe of the same nominal diameter (Promag H: only DN 8 and larger).
- Pressure losses for configurations incorporating adapters according to DIN EN 545 (see "Adapters" → 17)

10.1.10 Mechanical construction

Design, dimensions

The dimensions and installation lengths of the sensor and transmitter can be found in the "Technical Information" for the device in question. This document can be downloaded as a PDF file from www.endress.com. A list of the "Technical Information" documents available is provided in the "Documentation" section on → 116.

Weight (SI units)

Promag D

Weight data of Promag D in kg				
Nominal diameter		Compact version	Remote version (without cable)	
[mm]	[inch]		Sensor	Transmitter
25	1"	4.5	2.5	6.0
40	1 ½"	5.1	3.1	6.0
50	2"	5.9	3.9	6.0
65	2 ½"	6.7	4.7	6.0
80	3"	7.7	5.7	6.0
100	4"	10.4	8.4	6.0
Transmitter Promag (compact version): 3.4 kg (Weight data valid without packaging material)				

Promag L (lap joint flanges)

Weight data of Promag L in kg										
Nominal diameter		Compact version				Remote version (without cable)				
						Sensor				Transmitter
[mm]	[inch]	EN (DIN)		ANSI		EN (DIN)		ANSI		
50	2"	PN 16	10.6	Class 150	10.6	PN 16	8.6	Class 150	8.6	6.0
65	2 ½"		12.0		–		10.0		–	6.0
80	3"		14.0		14.0		12.0		12.0	6.0
100	4"		16.0		16.0		14.0		14.0	6.0
125	5"		21.5		–		19.5		–	6.0
150	6"		25.5		25.5		23.5		23.5	6.0
200	8"	PN 10	45		45	PN 10	43		43	6.0
250	10"		65		65		63		73	6.0
300	12"		70		–		68		–	6.0
Transmitter Promag (compact version): 3.4 kg (Weight data valid for standard pressure ratings and without packaging material)										

Promag L (lap joint flanges, stamped plate)

Weight data of Promag L in kg						
Nominal diameter		Compact version		Remote version (without cable)		
[mm]	[inch]	EN (DIN)		Sensor EN (DIN)		Transmitter
50	2"	PN 10	7.2	PN 10	5.2	6.0
65	2 ½"		8.0		6.0	6.0
80	3"		9.0		7.0	6.0
100	4"		11.5		9.5	6.0
125	5"		15.0		13.0	6.0
150	6"		19.0		17.0	6.0
200	8"		37.5		35.5	6.0
250	10"		56.0		54.0	6.0
300	12"		57.0		55.0	6.0
Transmitter Promag (compact version): 3.4 kg (Weight data valid for standard pressure ratings and without packaging material)						

Promag W

Weight data of Promag W in kg													
Nominal diameter		Compact version						Remote version (without cable)					
								Sensor					Trans-mitter
[mm]	[inch]	EN (DIN) / AS*		JIS		ANSI / AWWA		EN (DIN) / AS*		JIS		ANSI / AWWA	
25	1"	PN 40	7.3	10K	7.3	Class 150	7.3	PN 40	5.3	10K	5.3	Class 150	5.3	6.0
32	1 ¼"		8.0		7.3		–		6.0		5.3		–	6.0
40	1 ½"		9.4		8.3		9.4		7.4		6.3		7.4	6.0
50	2"		10.6		9.3		10.6		8.6		7.3		8.6	6.0
65	2 ½"	PN 16	12.0		11.1		–	PN 16	10.0		9.1		–	6.0
80	3"		14.0		12.5		14.0		12.0		10.5		12.0	6.0
100	4"		16.0		14.7		16.0		14.0		12.7		14.0	6.0
125	5"		21.5		21.0		–		19.5		19.0		–	6.0
150	6"		25.5		24.5		25.5		23.5		22.5		23.5	6.0
200	8"	PN 10	45		41.9		45	PN 10	43		39.9		43	6.0
250	10"		65		69.4		65		63		67.4		73	6.0
300	12"		70		72.3		110		68		70.3		108	6.0
350	14"		115				175		113				173	6.0
400	16"		135				205		133				203	6.0
450	18"		175				255		173				253	6.0
500	20"		175				285		173				283	6.0
600	24"		235				405		233				403	6.0
700	28"		355			Class D	400		353			Class D	398	6.0
–	30"		–				460		–				458	6.0
800	32"		435				550		433				548	6.0
900	36"		575				800		573				798	6.0
1000	40"		700				900		698				898	6.0
–	42"	PN 6	–				1100	PN 6	–				1098	6.0
1200	48"		850				1400		848				1398	6.0
–	54"		–				2200		–				2198	6.0
1400	–		1300				–		1298				–	6.0
–	60"		–				2700		–				2698	6.0
1600	–		1700				–		1698				–	6.0
–	66"		–				3700		–				3698	6.0
1800	72"		2200				4100		2198				4098	6.0
–	78"		–				4600		–				4598	6.0
2000	–		2800				–		2798				–	6.0

Transmitter Promag (compact version): 3.4 kg
(Weight data valid for standard pressure ratings and without packaging material)
*Flanges according to AS are only available for DN 80, 100, 150 to 400, 500 and 600

Promag P

Weight data of Promag P in kg													
Nominal diameter		Compact version						Remote version (without cable)					
								Sensor					Trans-mitter
[mm]	[inch]	EN (DIN) / AS*		JIS		ANSI / AWWA		EN (DIN) / AS*		JIS		ANSI / AWWA	
15	½"	PN 40	6.5	10K	6.5	Class 150	6.5	PN 40	4.5	10K	4.5	Class 150	4.5	6.0
25	1"		7.3		7.3		7.3		5.3		5.3		5.3	6.0
32	1 ¼"		8.0		7.3		–		6.0		5.3		–	6.0
40	1 ½"		9.4		8.3		9.4		7.4		6.3		7.4	6.0
50	2"		10.6		9.3		10.6		8.6		7.3		8.6	6.0
65	2 ½"	PN 16	12.0		11.1		–	PN 16	10.0		9.1		–	6.0
80	3"		14.0		12.5		14.0		12.0		10.5		12.0	6.0
100	4"		14.4		14.7		16.0		14.0		12.7		14.0	6.0
125	5"		16.0		21.0		–		19.5		19.0		–	6.0
150	6"		21.5		24.5		25.5		23.5		22.5		23.5	6.0
200	8"	PN 10	45		41.9		45	PN 10	43		39.9		43	6.0
250	10"		65		69.4		75		63		67.4		73	6.0
300	12"		70		72.3		110		68		70.3		108	6.0
350	14"		115				175		113				173	6.0
400	16"		135				205		133				203	6.0
450	18"		175				255		173				253	6.0
500	20"		175				285		173				283	6.0
600	24"		235				405		233				403	6.0

Transmitter Promag (compact version): 3.4 kg
High-temperature version: + 1.5 kg
(Weight data valid for standard pressure ratings and without packaging material)
* Flanges according to AS are only available for DN 25 and 50.

Promag H

Weight data of Promag H in kg				
Nominal diameter		Compact version	Remote version (without cable)	
[mm]	[inch]	DIN	Sensor	Transmitter
2	1/12"	5.2	2	6.0
4	5/32"	5.2	2	6.0
8	5/16"	5.3	2	6.0
15	½"	5.4	1.9	6.0
25	1"	5.5	2.8	6.0
40	1 ½"	6.5	4.5	6.0
50	2"	9.0	7.0	6.0
65	2 ½"	9.5	7.5	6.0
80	3"	19.0	17.0	6.0
100	4"	18.5	16.5	6.0

Transmitter Promag (compact version): 3.4 kg
(Weight data valid for standard pressure ratings and without packaging material)

Weight (US units)

Promag D

Weight data of Promag D in lbs				
Nominal diameter		Compact version	Remote version (without cable)	
[mm]	[inch]		Sensor	Transmitter
25	1"	10	6	13
40	1 ½"	11	7	13
50	2"	13	9	13
80	3"	17	13	13
100	4"	23	19	13
Transmitter Promag (compact version): 7.5 lbs (Weight data valid without packaging material)				

Promag L (ANSI)

Weight data of Promag L in lbs						
Nominal diameter		Compact version		Remote version (without cable)		
[mm]	[inch]				Sensor	Transmitter
50	2"	Class 150	23	Class 150	19	13
80	3"		31		26	13
100	4"		35		31	13
150	6"		56		52	13
200	8"		99		95	13
250	10"		143		161	13
Transmitter Promag (compact version): 7.5 lbs (Weight data valid for standard pressure ratings and without packaging material)						

Promag P (ANSI/AWWA)

Weight data of Promag P in lbs						
Nominal diameter		Compact version		Remote version (without cable)		
[mm]	[inch]				Sensor	Transmitter
15	½"	Class 150	14	Class 150	10	13
25	1"		16		12	13
40	1 ½"		21		16	13
50	2"		23		19	13
80	3"		31		26	13
100	4"		35		31	13
150	6"		56		52	13
200	8"		99		95	13
250	10"		165		161	13
300	12"		243		238	13
350	14"		386		381	13
400	16"		452		448	13
450	18"		562		558	13
500	20"		628		624	13
600	24"		893		889	13
Transmitter Promag (compact version): 7.5 lbs High-temperature version: 3.3 lbs (Weight data valid for standard pressure ratings and without packaging material)						

Promag W (ANSI/AWWA)

Weight data of Promag W in lbs						
Nominal diameter		Compact version		Remote version (without cable)		
[mm]	[inch]			Sensor		Transmitter
25	1"	Class 150	16	Class 150	12	13
40	1 ½"		21		16	13
50	2"		23		19	13
80	3"		31		26	13
100	4"		35		31	13
150	6"		56		52	13
200	8"		99		95	13
250	10"		143		161	13
300	12"		243		238	13
350	14"		386		381	13
400	16"		452		448	13
450	18"		562		558	13
500	20"		628		624	13
600	24"		893		889	13
700	28"	Class D	882	Class D	878	13
–	30"		1014		1010	13
800	32"		1213		1208	13
900	36"		1764		1760	13
1000	40"		1985		1980	13
–	42"		2426		2421	13
1200	48"		3087		3083	13
–	54"		4851		4847	13
–	60"		5954		5949	13
–	66"		8159		8154	13
1800	72"		9041		9036	13
–	78"		10143		10139	13
Transmitter Promag (compact version): 7.5 lbs (Weight data valid for standard pressure ratings and without packaging material)						

Promag H

Weight data of Promag H in lbs				
Nominal diameter		Compact version	Remote version (without cable)	
[mm]	[inch]		Sensor	Transmitter
2	1/12"	11	4	13
4	5/32"	11	4	13
8	5/16"	12	4	13
15	½"	12	4	13
25	1"	12	6	13
40	1 ½"	14	10	13
50	2"	20	15	13
65	2 ½"	21	17	13
80	3"	42	37	13
100	4"	41	36	13
Transmitter Promag (compact version): 7.5 lbs (Weight data valid for standard pressure ratings and without packaging material)				

Material

Promag D

- Transmitter housing: powder-coated die-cast aluminum
- Sensor housing: powder-coated die-cast aluminum
- Measuring tube: polyamide, O-rings EPDM
  (Drinking water approvals: WRAS BS 6920, ACS, NSF 61, KTW/W270)
- Electrodes: 1.4435/316L
- Ground disks: 1.4301/304

Promag L

- Transmitter housing:
  – Compact housing: powder-coated die-cast aluminum
  – Wall-mounted housing: powder-coated die-cast aluminum
- Sensor housing: powder-coated die-cast aluminum
- Measuring tube: stainless steel 1.4301 or 1.4306/304L
- Electrodes: 1.4435, Alloy C-22
- Flange
  – EN 1092-1 (DIN 2501): 1.4306; 1.4307; 1.4301; RSt37-2 (S235JRG2)
  – ANSI: A105; F316L
- Seals: to DIN EN 1514-1
- Ground disks: 1.4435/316L or Alloy C-22

Promag W

- Transmitter housing:
  – Compact housing: powder-coated die-cast aluminum
  – Wall-mounted housing: powder-coated die-cast aluminum
- Sensor housing
  – DN 25 to 300: powder-coated die-cast aluminum
  – DN 350 to 2000: with protective lacquering
- Measuring tube
  – DN ≤ 300: stainless steel 1.4301 or 1.4306/304L
    (for flanges made of carbon steel with Al/Zn protective coating)
  – DN ≥ 350: stainless steel 1.4301 or 1.4306/304
    (for flanges made of carbon steel with protective lacquering)
- Electrodes: 1.4435 or Alloy C-22, Tantalum
- Flange
  – EN 1092-1 (DIN2501): 1.4571/316L; RSt37-2 (S235JRG2); C22; FE 410W B
    (DN ≤ 300 with Al/Zn protective coating; DN ≥ 350 with protective lacquering)
  – ANSI: A105; F316L
    (DN ≤ 300 with Al/Zn protective coating; DN ≥ 350 with protective lacquering)
  – AWWA: 1.0425
  – JIS: RSt37-2 (S235JRG2); HII; 1.0425/316L
    (DN ≤ 300 with Al/Zn protective coating; DN ≥ 350 with protective lacquering)
  – AS 2129
    – (DN 150, 200, 250, 300, 600) A105 or RSt37-2 (S235JRG2)
    – (DN 80, 100, 350, 400, 500) A105 or St44-2 (S275JR)
  – AS 4087: A105 or St44-2 (S275JR)
- Seals: to DIN EN 1514-1
- Ground disks: 1.4435/316L, Alloy C-22, Titanium, Tantalum

Promag P

- Transmitter housing:
  - Compact housing: powder-coated die-cast aluminum
  - Wall-mounted housing: powder-coated die-cast aluminum
- Sensor housing
  - DN 15 to 300: powder-coated die-cast aluminum
  - DN 350 to 2000: with protective lacquering
- Measuring tube
  - DN ≤ 300: stainless steel 1.4301 or 1.4306/304L; for flanges made of carbon steel with Al/Zn protective coating
  - DN ≥ 350.: stainless steel 1.4301 or 1.4306/304L; for flanges made of carbon steel with Al/Zn protective coating
- Electrodes: 1.4435, Platinum, Alloy C-22, Tantalum, Titanium
- Flange
  - EN 1092-1 (DIN2501): 1.4571/316L; RSt37-2 (S235JRG2); C22; FE 410W B (DN ≤ 300: with Al/Zn protective coating; DN ≥ 350 with protective lacquering)
  - ANSI: A105; F316L (DN ≤ 300 with Al/Zn protective coating; DN ≥ 350 with protective lacquering)
  - AWWA: 1.0425
  - JIS: RSt37-2 (S235JRG2); HII; 1.0425/316L (DN ≤ 300 with Al/Zn protective coating; DN ≥ 350 with protective lacquering)
  - AS 2129
    - (DN 25) A105 or RSt37-2 (S235JRG2)
    - (DN 40) A105 or St44-2 (S275JR)
  - AS 4087: A105 or St44-2 (S275JR)
- Seals: to DIN EN 1514-1
- Ground disks: 1.4435/316L or Alloy C-22

Promag H

- Transmitter housing:
  - Compact housing: powder-coated die-cast aluminum or stainless steel field housing (1.4301/316L)
  - Wall-mounted housing: powder-coated die-cast aluminum
  - Window material: glas or polycarbonate
- Sensor housing: stainless steel 1.4301
- Wall mounting kit: stainless steel 1.4301
- Measuring tube: stainless steel 1.4301
- Electrodes:
  - Standard: 1.4435
  - Option: Alloy C-22, Tantalum, Platinum
- Flange:
  - All connections stainless-steel 1.4404/316L
  - EN (DIN), ANSI, JIS made of PVDF
  - Adhesive fitting made of PVC
- Seals
  - DN 2 to 25: O-ring (EPDM, Viton, Kalrez), gasket seal (EPDM, Viton, silicone)
  - DN 40 to 100: gasket seal (EPDM, Viton, silicone)
- Ground rings: 1.4435/316L (optional: Tantalum, Alloy C-22)

Material load diagram

The material load diagrams (pressure-temperature graphs) for the process connections are to be found in the "Technical Information" documents of the device in question:
List of supplementary documentation → 🗎 116.

Fitted electrodes	*Promag D* ■ 2 measuring electrodes for signal detection *Promag L, W and P* ■ 2 measuring electrodes for signal detection ■ 1 EPD electrode for empty pipe detection ■ 1 reference electrode for potential equalization *Promag H* ■ 2 measuring electrodes for signal detection ■ 1 EPD electrode for empty pipe detection (apart from DN 2 to 15)
Process connections	*Promag D* Wafer version → without process connections *Promag L* Flange connections: ■ EN 1092-1 (DIN 2501) ■ ANSI *Promag W and P* Flange connections: ■ EN 1092-1 (DIN 2501) – DN ≤ 300 = form A – DN ≥ 350 = flat face – DN 65 PN 16 and DN 600 PN 16 only as per EN 1092-1 ■ ANSI ■ AWWA (only Promag W) ■ JIS ■ AS *Promag H* With O-ring: ■ Weld nipple DIN (EN), ISO 1127, ODT/SMS ■ Flange EN (DIN), ANSI, JIS ■ Flange made of PVDF EN (DIN), ANSI, JIS ■ External thread ■ Internal thread ■ Hose connection ■ PVC adhesive fitting With gasket seal: ■ Weld nipple DIN 11850, ODT/SMS ■ Clamp ISO 2852, DIN 32676, L14 AM7 ■ Threaded joint DIN 11851, DIN 11864-1, ISO 2853, SMS 1145 ■ Flange DIN 11864-2
Surface roughness	All data relate to parts in contact with fluid. ■ Liner → PFA: ≤ 0.4 µm (15 µin) ■ Electrodes: 0.3 to 0.5 µm (12 to 20 µin) ■ Process connection made of stainless-steel (Promag H): ≤ 0.8 µm (31 µin)

10.1.11 Human interface

Display elements	■ Liquid crystal display: illuminated, two-line, 16 characters per line ■ Custom configurations for presenting different measured-value and status variables ■ 2 totalizers Note! At ambient temperatures below –20 (–4 °F) the readability of the display may be impaired.
Operating elements	■ Local operation with three keys (–, +, E) ■ "Quick Setup" menus for straightforward commissioning
Language groups	Language groups available for operation in different countries: ■ Western Europe and America (WEA): English, German, Spanish, Italian, French, Dutch and Portuguese ■ Eastern Europe/Scandinavia (EES): English, Russian, Polish, Norwegian, Finnish, Swedish and Czech ■ Southeast Asia (SEA): English, Japanese, Indonesian Note! You can change the language group via the operating program "FieldCare".
Remote operation	Operation via HART protocol and Fieldtool

10.1.12 Certificates and approvals

CE mark	The measuring system is in conformity with the statutory requirements of the EC Directives. Endress+Hauser confirms successful testing of the device by affixing to it the CE mark.
C-tick mark	The measuring system meets the EMC requirements of the Australian Communications and Media Authority (ACMA)
Ex approval	Information about currently available Ex versions (ATEX, FM, CSA, IECEx, NEPSI etc.) can be supplied by your Endress+Hauser Sales Center on request. All explosion protection data are given in a separate documentation which is available upon request.
Sanitary compatibility	*Promag D, L, W and P* No applicable approvals or certification *Promag H* ■ 3A authorization and EHEDG-tested ■ Seals: in conformity with FDA (except Kalrez seals)
Drinking water approval	*Promag D, L and W* ■ WRAS BS 6920 ■ ACS ■ NSF 61 ■ KTW/W270 *Promag P and H* No drinking water approval

Pressure Equipment Directive	*Promag D and L* No pressure measuring device approval *Promag W, P and H* Measuring devices with a nominal diameter smaller than or equal to DN 25 correspond to Article 3 (3) of the EC Directive 97/23/EC (Pressure Equipment Directive) and have been designed and manufactured according to good engineering practice. Where necessary (depending on the fluid and process pressure), there are additional optional approvals to Category II/III for larger nominal diameters.
Other standards and guidelines	■ EN 60529 Degrees of protection by housing (IP code). ■ EN 61010-1 Safety requirements for electrical equipment for measurement, control and laboratory use ■ IEC/EN 61326 Electromagnetic compatibility (EMC requirements) ■ ANSI/ISA-S82.01 Safety Standard for Electrical and Electronic Test, Measuring, Controlling and related Equipment – General Requirements. Pollution degree 2, Installation Category II. ■ CAN/CSA-C22.2 (No. 1010.1-92) Safety requirements for Electrical Equipment for Measurement and Control and Laboratory Use. Pollution degree 2, Installation Category I. ■ NAMUR NE 21 Electromagnetic compatibility (EMC) of industrial process and laboratory control equipment. ■ NAMUR NE 43 Standardization of the signal level for the breakdown information of digital transmitters with analog output signal.

10.1.13 Ordering information

Your Endress+Hauser service organization can provide detailed ordering information and information on the order codes on request.

10.1.14 Accessories

Various accessories, which can be ordered separately from Endress+Hauser, are available for the transmitter and the sensor → 77.
Your Endress+Hauser service organization can provide detailed information on the specific order codes on request.

10.1.15 Documentation

- Flow measuring technology (FA005D/06)
- Technical Information Promag 50D (TI082D/06)
- Technical Information Promag 50L (TI097D/06)
- Technical Information Promag 50W, 53W (TI046D/06)
- Technical Information Promag 50P, 53P (TI047D/06)
- Technical Information Promag 50H, 53H (TI048D/06)
- Description of Device Functions Promag 50 HART (BA049D/06)
- Supplementary documentation on Ex-ratings: ATEX, FM, CSA, etc.

Index

A
Accessories 77
Adapters 17
Ambient temperature range 101
Applicator (selection and configuration software) 79
Approvals 9, 115

C
Cable entry 99
Cable specifications 49
Calibration factor 8–9
CE mark 115
CE mark (Declaration of Conformity) 9
Centering sleeve
  Promag D 22
Certificates 9, 115
CIP cleaning 101
Cleaning (exterior cleaning) 76
Code entry (function matrix) 61
Commissioning
  General 71
  Two current outputs 73
Commissioning Quick Setup menu 72
Commubox FXA 195 (electrical connection) 53, 78
Communication 63
Conductivity of fluid 103
Connecting cable 20
Connection
  Check 58
  HART 53
  Remote version 44
C-tick mark 115
Current output
  Configuration (active/passive) 73

D
Declaration of Conformity (CE mark) 9
Degree of protection 57, 101
Design 107
Device description files 64
Device variable via HART protocol 64
Display
  Elements 59, 115
  Turning the display 40
Documentation 116
Drinking water approval 115

E
Electrical connection
  Commubox FXA 191 53
  HART handheld terminal 53
Electrical connections 99
Electrodes
  EPD electrode 15
EMC (electromagnetic compatibility) 49, 101
Empty-pipe/full-pipe adjustment 74
Error message types 62
Error messages
  Process error (application error) 83
  System errors (device errors) 81
European Pressure Equipment Directive 116
Ex approval 115
Exterior cleaning 76

F
Field Xpert SFX100 53
FieldCare 63, 79
Fieldcheck (tester and simulator) 79
Fitted electrodes 114
Flow rate/limits 18
Function matrix
  Brief operating instructions 60
Fuse, replacing 92
FXA193 79
FXA195 78

G
Galvanic isolation 98
Gewicht 110
Ground cable
  Promag L 24
  Promag P 31
  Promag W 26
Grounding rings
  Promag H 37

H
HART
  Command classes 63
  Commands 65
  Communicator DXR 375 63
  Device description files 64
  Device status / Error messages 69
  Write protection 64
Hazardous substances 95
High-temperature version 32
HOME position (operating mode) 59

I
Incoming acceptance 11
Inlet/outlet run 16
Installation
  Promag D 21
  Promag H 36
  Promag L 24
  Promag P 31
  Promag W 26
Installation conditions
  Adapters 17
  Dimensions 13
  Down pipe 14
  EPD electrode 15
  Foundations, supports 17
  Inlet/outlet run 16

Installation of pumps . . . 13
Mounting location . . . 13
Orientation . . . 15
Partially filled pipes . . . 14
Vibrations . . . 16
Installing the wall-mount housing . . . 41

L

Language groups . . . 115
Load . . . 98
Local display
See Display
Low flow cut off . . . 98

M

Maintenance . . . 76
Material . . . 112
Material load diagram . . . 113
Maximum measured error . . . 100
Measured variable . . . 97
Measuring principle . . . 97
Measuring range . . . 97
Measuring system . . . 97
Mechanical construction . . . 107
Medium pressure range . . . 103
Medium temperature range . . . 102
Mounting bolts
Promag D . . . 22
Mounting the sensor
See Installing the sensor

N

Nameplate specifications
Connections . . . 9
Sensor . . . 8
Transmitter . . . 7
Nominal diameter and flow rate
Promag W . . . 18

O

Operable flow range . . . 97
Operating conditions
Environment . . . 101
Process . . . 102
Operating elements . . . 59, 115
Operation . . . 59
Device description files . . . 64
FieldCare . . . 63
Operating programs . . . 63
Operational safety . . . 5
Order code
Accessories . . . 77
Sensor . . . 9
Ordering code
Sensor . . . 8
Transmitter . . . 7
Ordering information . . . 116
Output . . . 97

P

Performance characteristics . . . 100
Pig (cleaning) . . . 38
Post-installation
Check . . . 43
Potential equalization . . . 54
Power consumption . . . 99
Power supply . . . 99
Power supply failure . . . 99
Pressure Equipment Directive . . . 116
Pressure loss
Adapters (reducers, expanders) . . . 17
Pressure tightness . . . 105
Process connections . . . 114
Process error messages . . . 83
Process errors (definition) . . . 62
Programming mode
Disable . . . 61
Enable . . . 61
Promag D
Centering sleeve . . . 22
Installation . . . 21
Mounting bolts . . . 22
Seals . . . 21
Tightening torques . . . 23
Promag D mounting kit . . . 21
Promag H
Cleaning with pigs . . . 38
Grounding ring . . . 37
Installation . . . 36
Seals . . . 36
Weld nipple . . . 38
Promag L
Ground cable . . . 24
Installation . . . 24
Seals . . . 24
Tightening torques . . . 25
Promag P
Ground cable . . . 31
High-temperature version . . . 32
Installation . . . 31
Seals . . . 31
Tightening torques . . . 32
Promag W
Ground cable . . . 26
Installation . . . 26
Seals . . . 26
Tightening torques . . . 26

Q

Quick Setup . . . 72

R

Reference operating conditions . . . 100
Registered trademarks . . . 10
Remote operation . . . 115
Remote version
Connection . . . 44
Repair . . . 95

Repeatability 100
Replacing
Exchangeable electrode 93
Response to errors 85
Returning devices 95

S

Safety icons 6
Safety instructions 5
Sanitary compatibility 115
S-DAT (HistoROM) 75
Seals 76
Promag D 21
Promag H 36
Promag L 24
Promag P 31
Promag W 26
Serial number
Sensor 8–9
Transmitter 7
Service interface FXA 193 79
Shock resistance 101
Signal on alarm 98
SIP cleaning 101
Software
Amplifier display 71
Spare parts 87
Standards, guidelines 116
Storage temperature 101
Supply voltage 99
Surface roughness 114
Switching on (measuring device) 71
System error messages 81
System errors (definition) 62

T

Technical data 97
Temperature
Ambient 101
Medium 102
Storage 101
Tightening torques
Promag D 23
Promag L 25
Promag P 32
Promag W 26
Transmitter
Electrical connection 50
Installing the wall-mount housing 41
Turning the field housing (aluminum) 39
Turning the field housing (stainless steel) 39
Troubleshooting 80
Types of error (system and process errors) 62

V

Vibration resistance 101
Vibrations 16

W

Wall-mount housing, installing 41
Weight 107
Wiring 44

Endress+Hauser

People for Process Automation

Declaration of Hazardous Material and De-Contamination

Erklärung zur Kontamination und Reinigung

RA No. ☐☐☐☐☐☐☐☐

Please reference the Return Authorization Number (RA#), obtained from Endress+Hauser, on all paperwork and mark the RA# clearly on the outside of the box. If this procedure is not followed, it may result in the refusal of the package at our facility.

Bitte geben Sie die von E+H mitgeteilte Rücklieferungsnummer (RA#) auf allen Lieferpapieren an und vermerken Sie diese auch außen auf der Verpackung. Nichtbeachtung dieser Anweisung führt zur Ablehnung ihrer Lieferung.

Because of legal regulations and for the safety of our employees and operating equipment, we need the "Declaration of Hazardous Material and De-Contamination", with your signature, before your order can be handled. Please make absolutely sure to attach it to the outside of the packaging.

Aufgrund der gesetzlichen Vorschriften und zum Schutz unserer Mitarbeiter und Betriebseinrichtungen, benötigen wir die unterschriebene "Erklärung zur Kontamination und Reinigung", bevor Ihr Auftrag bearbeitet werden kann. Bringen Sie diese unbedingt außen an der Verpackung an.

Type of instrument / sensor
Geräte-/Sensortyp _____

Serial number
Seriennummer _____

☐ **Used as SIL device in a Safety Instrumented System /** *Einsatz als SIL Gerät in Schutzeinrichtungen*

Process data/ *Prozessdaten*

Temperature / *Temperatur* _____ [°F] _____ [°C]

Pressure / *Druck* _____ [psi] _____ [Pa]

Conductivity / *Leitfähigkeit* _____ [µS/cm]

Viscosity / *Viskosität* _____ [cp] _____ [mm^2/s]

Medium and warnings
Warnhinweise zum Medium

	Medium /concentration *Medium /Konzentration*	Identification CAS No.	flammable *entzündlich*	toxic *giftig*	corrosive *ätzend*	harmful/ irritant *gesundheits-schädlich/ reizend*	other * *sonstiges**	harmless *unbedenklich*
Process medium / *Medium im Prozess*								
Medium for process cleaning / *Medium zur Prozessreinigung*								
Returned part cleaned with / *Medium zur Endreinigung*								

* explosive; oxidising; dangerous for the environment; biological risk; radioactive

* *explosiv; brandfördernd; umweltgefährlich; biogefährlich; radioaktiv*

Please tick should one of the above be applicable, include safety data sheet and, if necessary, special handling instructions.

Zutreffendes ankreuzen; trifft einer der Warnhinweise zu, Sicherheitsdatenblatt und ggf. spezielle Handhabungsvorschriften beilegen.

Description of failure / *Fehlerbeschreibung* _____

_____

_____

Company data / *Angaben zum Absender*

Company / *Firma* _____

_____

Address / *Adresse*

_____

_____

Phone number of contact person / *Telefon-Nr. Ansprechpartner:*

_____

Fax / E-Mail _____

Your order No. / *Ihre Auftragsnr.* _____

"We hereby certify that this declaration is filled out truthfully and completely to the best of our knowledge.We further certify that the returned parts have been carefully cleaned. To the best of our knowledge they are free of any residues in dangerous quantities."

"Wir bestätigen, die vorliegende Erklärung nach unserem besten Wissen wahrheitsgetreu und vollständig ausgefüllt zu haben. Wir bestätigen weiter, dass die zurückgesandten Teile sorgfältig gereinigt wurden und nach unserem besten Wissen frei von Rückständen in gefahrbringender Menge sind."

_____ (place, date / *Ort, Datum*)

_____ Name, dept./*Abt.* (please print / *bitte Druckschrift*)

_____ Signature / *Unterschrift*

www.endress.com/worldwide

Endress+Hauser

People for Process Automation

BA046D/06/en/12.09
71106181
FM+SGML6.0 ProMoDo

Endress+Hauser
People for Process Automation

Flow Calibration with Adjustment

30306740-3310221

3800083051	FCP-6.C
Purchase order number	Calibration rig
US-3005189942-10 / Endress+Hauser Flowtec	99.59059 us.gal/min (≙ 100%)
Order N°/Manufacturer	Calibrated full scale
50P40-EL0A1AA0BBAA	Service interface
Order code	Calibrated output
PROMAG 50 P 1 1/2"	0.7649
Transmitter/Sensor	Calibration factor
J6007816000	0
Serial N°	Zero point
–	82.8 °F
Tag N°	Water temperature

Flow [%]	Flow [us.gal/min]	Duration [s]	V target [us.gal]	V meas. [us.gal]	Δ o.r.* [%]	Outp.** [mA]
3.9	3.8735	85.1	5.4964	5.5136	0.31	4.62
39.9	39.702	60.1	39.794	39.795	0.00	10.38
40.0	39.786	60.1	39.877	39.875	0.00	10.39
100.5	100.034	50.1	83.596	83.597	0.00	20.07
–	–	–	–	–	–	–
–	–	–	–	–	–	–
–	–	–	–	–	–	–
–	–	–	–	–	–	–
–	–	–	–	–	–	–
–	–	–	–	–	–	–

*o.r.: of rate

**Calculated value (4 - 20 mA)

Measured error % o.r.

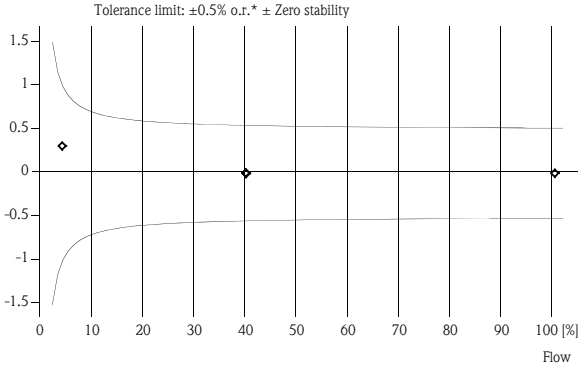

For detailed data concerning output specifications of the unit under test, see Technical Information (TI), chapter Performance characteristics.

The calibration is traceable to the N.I.S.T. through standards certified at preset intervals.

Endress+Hauser Flowtec operates ISO/IEC 17025 accredited calibration facilities in Reinach (CH), Cernay (FR), Greenwood (USA), Aurangabad (IN) and Suzhou (CN).

06-04-2014
Date of calibration

C. Tucker
Operator

Endress+Hauser Flowtec, Division USA
2330 Endress Place
Greenwood, IN 46143

Certified acc. to
ISO 9001, Reg.-N° 030502.2
ISO 14001, Reg.-N° EMS561046

Endress+Hauser
People for Process Automation

Flow Calibration with Adjustment

30306771-3310220

3800083051	FCP-6.C
Purchase order number	Calibration rig
US-3005189942-10 / Endress+Hauser Flowtec	99.59059 us.gal/min (≙ 100%)
Order N°/Manufacturer	Calibrated full scale
50P40-EL0A1AA0BBAA	Service interface
Order code	Calibrated output
PROMAG 50 P 1 1/2"	0.7752
Transmitter/Sensor	Calibration factor
J6007716000	-16
Serial N°	Zero point
-	84.1 °F
Tag N°	Water temperature

Flow [%]	Flow [us.gal/min]	Duration [s]	V target [us.gal]	V meas. [us.gal]	Δ o.r.* [%]	Outp.** [mA]
3.9	3.8887	85.1	5.5182	5.5681	0.90	4.63
39.8	39.621	60.1	39.712	39.717	0.01	10.37
39.9	39.706	60.1	39.798	39.790	-0.02	10.38
100.5	100.055	50.1	83.608	83.562	-0.06	20.07
-	-	-	-	-	-	-
-	-	-	-	-	-	-
-	-	-	-	-	-	-
-	-	-	-	-	-	-
-	-	-	-	-	-	-
-	-	-	-	-	-	-

*o.r.: of rate

**Calculated value (4 - 20 mA)

Measured error % o.r.

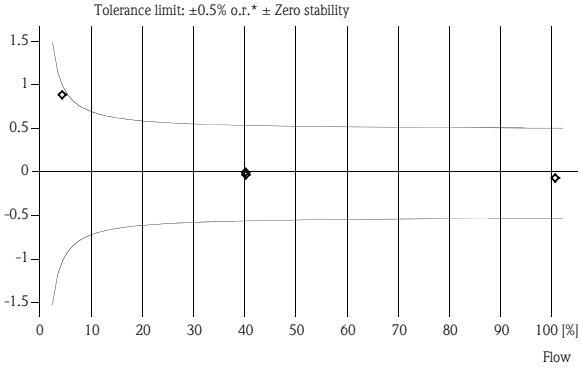

For detailed data concerning output specifications of the unit under test, see Technical Information (TI), chapter Performance characteristics.

The calibration is traceable to the N.I.S.T. through standards certified at preset intervals.

Endress+Hauser Flowtec operates ISO/IEC 17025 accredited calibration facilities in Reinach (CH), Cernay (FR), Greenwood (USA), Aurangabad (IN) and Suzhou (CN).

06-04-2014
Date of calibration

C. Tucker
Operator

Endress+Hauser Flowtec, Division USA
2330 Endress Place
Greenwood, IN 46143

Certified acc. to
ISO 9001, Reg.-N° 030502.2
ISO 14001, Reg.-N° EMS561046

Endress+Hauser
People for Process Automation

Flow Calibration with Adjustment

30306799-3310219

3800083051	FCP-6.C
Purchase order number	Calibration rig
US-3005189942-10 / Endress+Hauser Flowtec	99.59059 us.gal/min (≙ 100%)
Order N°/Manufacturer	Calibrated full scale
50P40-EL0A1AA0BBAA	Service interface
Order code	Calibrated output
PROMAG 50 P 1 1/2"	0.7747
Transmitter/Sensor	Calibration factor
J6007616000	19
Serial N°	Zero point
–	84.1 °F
Tag N°	Water temperature

Flow [%]	Flow [us.gal/min]	Duration [s]	V target [us.gal]	V meas. [us.gal]	Δ o.r.* [%]	Outp.** [mA]
3.9	3.8587	85.1	5.4753	5.4772	0.04	4.62
39.8	39.588	60.1	39.677	39.681	0.01	10.36
39.9	39.693	60.1	39.781	39.776	-0.01	10.38
100.5	100.050	50.1	83.599	83.568	-0.04	20.07
–	–	–	–	–	–	–
–	–	–	–	–	–	–
–	–	–	–	–	–	–
–	–	–	–	–	–	–
–	–	–	–	–	–	–
–	–	–	–	–	–	–

*o.r.: of rate

**Calculated value (4 - 20 mA)

Measured error % o.r.

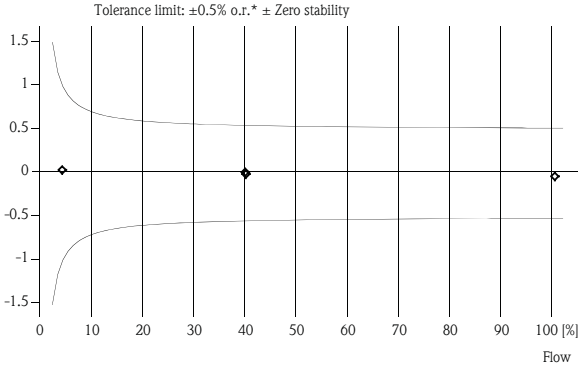

For detailed data concerning output specifications of the unit under test, see Technical Information (TI), chapter Performance characteristics.

The calibration is traceable to the N.I.S.T. through standards certified at preset intervals.

Endress+Hauser Flowtec operates ISO/IEC 17025 accredited calibration facilities in Reinach (CH), Cernay (FR), Greenwood (USA), Aurangabad (IN) and Suzhou (CN).

06-04-2014
Date of calibration

C. Tucker
Operator

Endress+Hauser Flowtec, Division USA
2330 Endress Place
Greenwood, IN 46143

Certified acc. to
ISO 9001, Reg.-N° 030502.2
ISO 14001, Reg.-N° EMS561046

Endress+Hauser
People for Process Automation

Flow Calibration with Adjustment

30306757-3310218

3800083051	FCP-6.C
Purchase order number	Calibration rig
US-3005189942-10 / Endress+Hauser Flowtec	99.59059 us.gal/min (≙ 100%)
Order N°/Manufacturer	Calibrated full scale
50P40-EL0A1AA0BBAA	Service interface
Order code	Calibrated output
PROMAG 50 P 1 1/2"	0.7722
Transmitter/Sensor	Calibration factor
J6007516000	5
Serial N°	Zero point
–	83.6 °F
Tag N°	Water temperature

Flow [%]	Flow [us.gal/min]	Duration [s]	V target [us.gal]	V meas. [us.gal]	Δ o.r.* [%]	Outp.** [mA]
3.9	3.8878	85.1	5.5168	5.5246	0.14	4.63
39.8	39.679	60.1	39.769	39.770	0.00	10.37
39.9	39.781	60.1	39.874	39.871	-0.01	10.39
100.4	100.013	50.1	83.573	83.584	0.01	20.07
–	–	–	–	–	–	–
–	–	–	–	–	–	–
–	–	–	–	–	–	–
–	–	–	–	–	–	–
–	–	–	–	–	–	–
–	–	–	–	–	–	–

*o.r.: of rate

**Calculated value (4 - 20 mA)

Measured error % o.r.

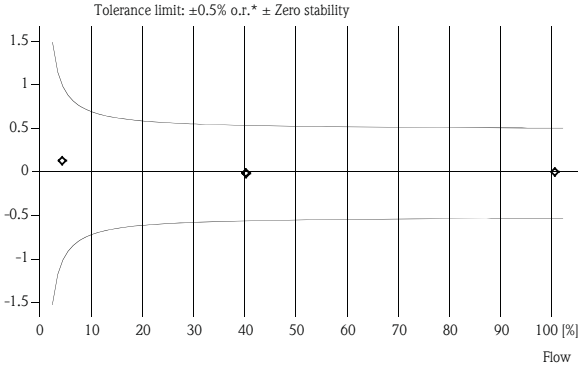

For detailed data concerning output specifications of the unit under test, see Technical Information (TI), chapter Performance characteristics.

The calibration is traceable to the N.I.S.T. through standards certified at preset intervals.

Endress+Hauser Flowtec operates ISO/IEC 17025 accredited calibration facilities in Reinach (CH), Cernay (FR), Greenwood (USA), Aurangabad (IN) and Suzhou (CN).

06-04-2014
Date of calibration

C. Tucker
Operator

Endress+Hauser Flowtec, Division USA
2330 Endress Place
Greenwood, IN 46143

Certified acc. to
ISO 9001, Reg.-N° 030502.2
ISO 14001, Reg.-N° EMS561046

Endress+Hauser
People for Process Automation

Flow Calibration with Adjustment

30306760-3310217

3800083051	FCP-6.C
Purchase order number	Calibration rig
US-3005189942-10 / Endress+Hauser Flowtec	99.59059 us.gal/min (≙ 100%)
Order N°/Manufacturer	Calibrated full scale
50P40-EL0A1AA0BBAA	Service interface
Order code	Calibrated output
PROMAG 50 P 1 1/2"	0.7465
Transmitter/Sensor	Calibration factor
J6007416000	6
Serial N°	Zero point
–	83.7 °F
Tag N°	Water temperature

Flow [%]	Flow [us.gal/min]	Duration [s]	V target [us.gal]	V meas. [us.gal]	Δ o.r.* [%]	Outp.** [mA]
3.9	3.8738	85.1	5.4969	5.5114	0.26	4.62
39.8	39.602	60.1	39.694	39.689	-0.01	10.36
39.9	39.709	60.1	39.799	39.805	0.02	10.38
100.5	100.097	50.1	83.643	83.650	0.01	20.08
–	–	–	–	–	–	–
–	–	–	–	–	–	–
–	–	–	–	–	–	–
–	–	–	–	–	–	–
–	–	–	–	–	–	–
–	–	–	–	–	–	–

*o.r.: of rate

**Calculated value (4 - 20 mA)

Measured error % o.r.

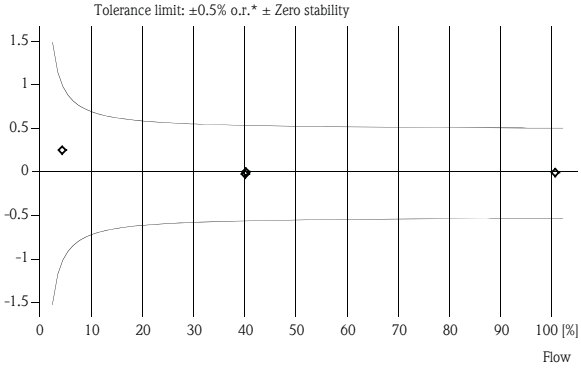

For detailed data concerning output specifications of the unit under test, see Technical Information (TI), chapter Performance characteristics.

The calibration is traceable to the N.I.S.T. through standards certified at preset intervals.

Endress+Hauser Flowtec operates ISO/IEC 17025 accredited calibration facilities in Reinach (CH), Cernay (FR), Greenwood (USA), Aurangabad (IN) and Suzhou (CN).

06-04-2014
Date of calibration

C. Tucker
Operator

Endress+Hauser Flowtec, Division USA
2330 Endress Place
Greenwood, IN 46143

Certified acc. to
ISO 9001, Reg.-N° 030502.2
ISO 14001, Reg.-N° EMS561046

PROPRIETARY NOTICE

THIS DRAWING WAS ORIGINATED BY AND IS THE EXCLUSIVE PROPERTY OF SPEARS MANUFACTURING COMPANY. IT IS FURNISHED FOR RECIPIENT'S INFORMATION ONLY AND IS NOT AN AUTHORIZATION OR LICENSE TO MAKE THIS CONSTRUCTION OR TO FURNISH THIS INFORMATION TO OTHERS.

REVISIONS

ZONE	LTR	QTY	DESCRIPTION	DATE	REVISED

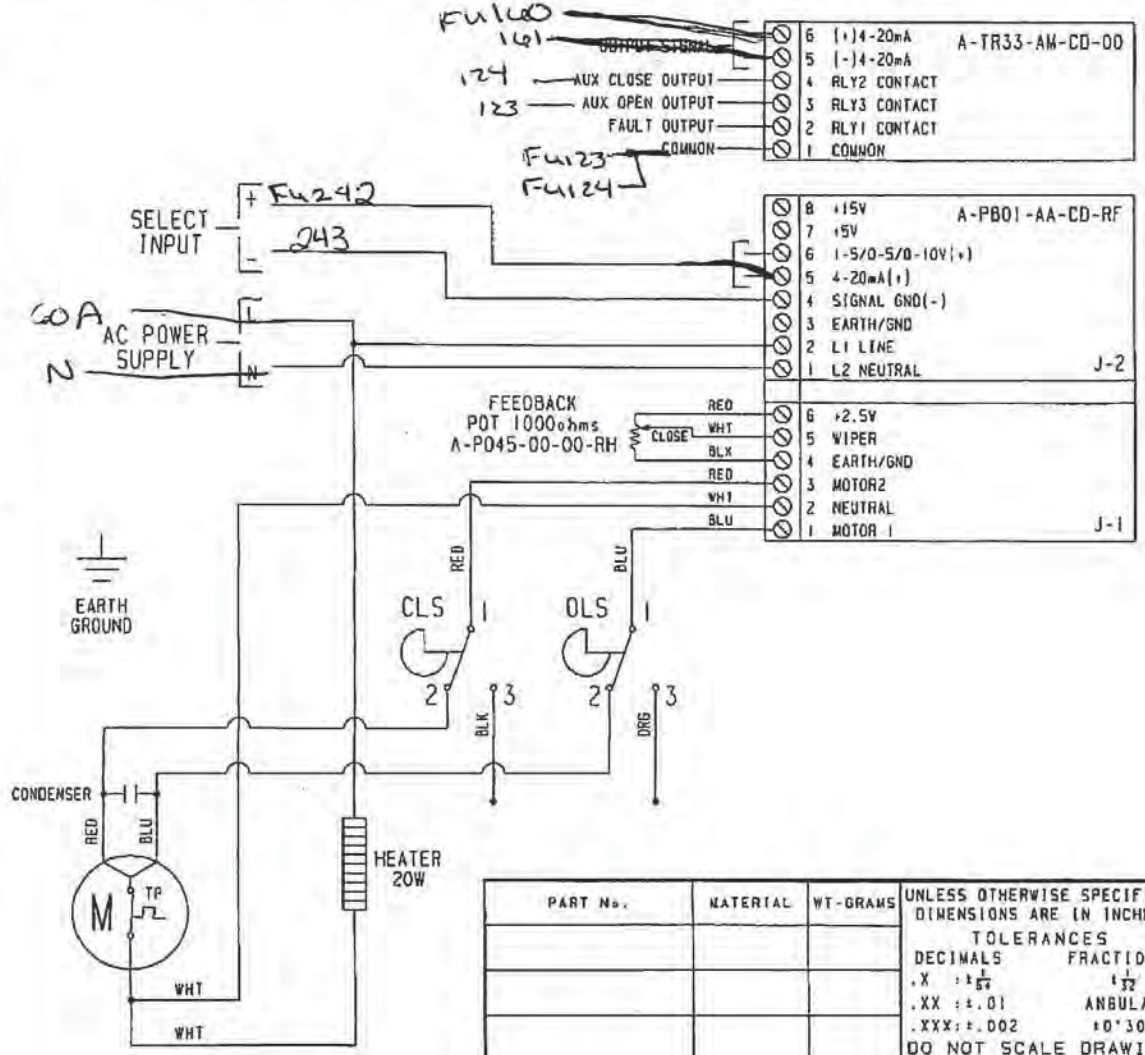

	CLOSE	OPEN
CLS 1-2		
CLS 1-3		
OLS 1-2		
OLS 1-3		

CLS: CLOSE LIMIT SWITCH (250VAC 6A)
OLS: OPEN LIMIT SWITCH (250VAC 6A)
TP: THERMAL PROTECTOR (250VAC 15A)

AUX. WIRING (250VAC, 6A)

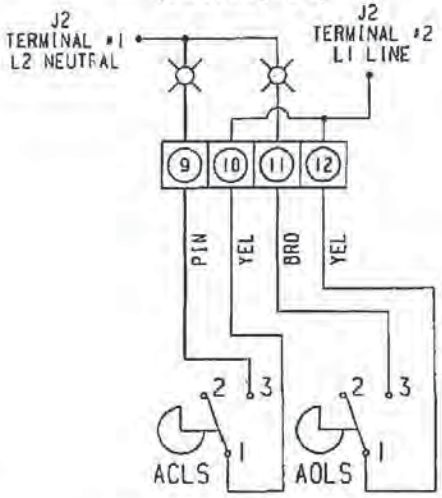

LINETYPE KEY

- - - - - - - DENOTES CUSTOMER WIRING

PART No.	MATERIAL	WT-GRAMS
MB No.		
PPC-PPMB		
TOOL No.		

UNLESS OTHERWISE SPECIFIED DIMENSIONS ARE IN INCHES
TOLERANCES
DECIMALS: .X ±1/64, .XX ±.01, .XXX ±.002
FRACTIONS ±1/32
ANGULAR ±0°30'
DO NOT SCALE DRAWING

DRAWN	TJI	DATE 06/02/14
DESIGNED		
CHECKED	JBS	JUN 16 2014
APPROVED	JBS	JUN 16 2014

SPEARS® MANUFACTURING CO.
15853 OLDEN ST., SYLMAR, CA. 91342; U.S.A.
PHONE : (818) 364-6766
FAX : (818) 364-5894

TITLE

OTQ-006-009, 120VAC, MOD/TRANS/RELAY OUTPUT WIRING DIAGRAM

SCALE	SIZE	DRAWING No.	DL No.	SHEET
NTS	A	SS-01424	D1	1 OF 1

316 Stainless Steel, Multi-Tube Filter Housing

For Code F

This multi-tube cartridge filter housing is made of 316 stainless steel, and is suited for general-purpose industrial and commercial filtration. These housings can accommodate Code F (DOE) or Code 0 cartridges, and are available with 6, 12, and 21 tubes in 10, 20, 30, 40-inch lengths.

- Incorporates a flow baffle, which deflects incoming flow to prevent cartridge erosion
- An air vent on the cover allows venting before start-up
- A swing bolt closure allows quick disassembly for cleaning and cartridge replacement

6-ROUND DIMENSIONS

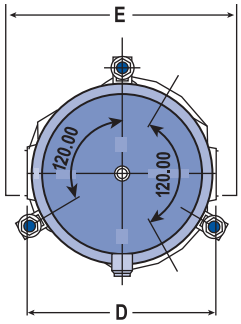

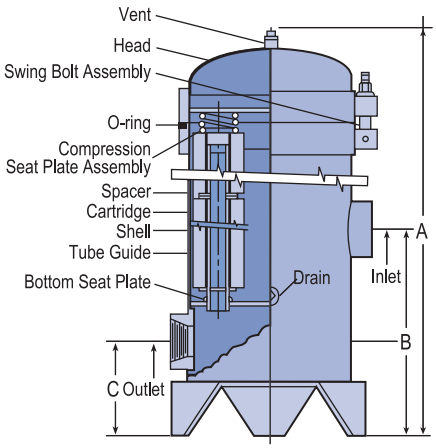

12- AND 21-ROUND DIMENSIONS

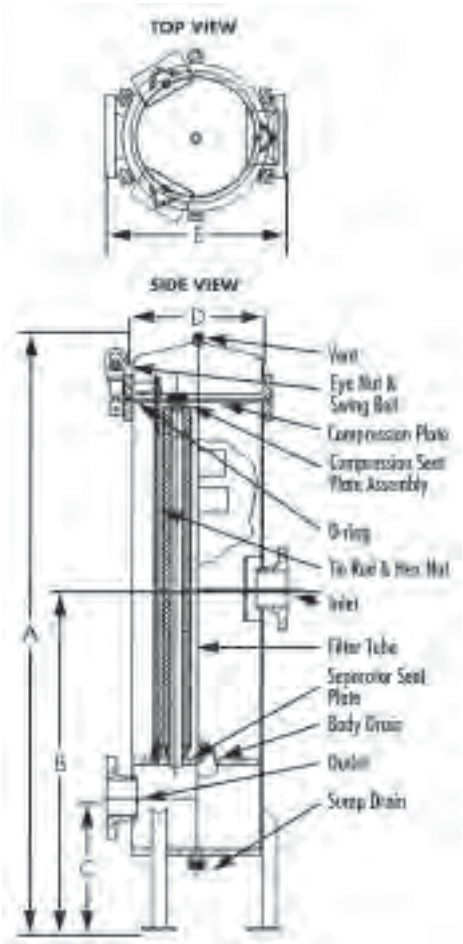

316 Stainless Steel, Multi-Tube Filter Housing

FILTER HOUSING SPECIFICATIONS

Dimensions (inches (cm)	*Inlet/Outlet*	*Housing Dimensions A*	*B*	*C*	*D*	*Flange Option E*	*Max. Flow Rate*/gpm (lpm)*
6-round 10"	2 NPTM (5.1)	24 (61)	11.2 (28)	5.2 (13)	10.2 (26)	15 (38)	30 (114)
6-round 20"	2 NPTM (5.1)	34 (86)	11.2 (28)	5.2 (13)	10.2 (26)	15 (38)	60 (227)
6-round 30"	2 NPTM (5.1)	45 (114)	11.2 (28)	5.2 (13)	10.2 (26)	15 (38)	90 (340)
6-round 40"	2 NPTM (5.1)	56 (142)	11.2 (28)	5.2 (13)	10.2 (26)	15 (38)	120 (454)
12-round 30"	3 flange (7.6)	56 (142)	31 (79)	12 (30)	12 (30)	16.4 (42)	180 (680)
12-round 40"	3 flange (7.6)	66 (168)	31 (79)	12 (30)	12 (30)	16.4 (42)	240 (908)
21-round 30"	4 flange (10.16)	57 (145)	31 (79)	12 (30)	16 (41)	20.8 (53)	315 (1190)
21-round 40"	4 flange (10.16)	67 (170)	31 (79)	12 (30)	16 (41)	20.8 (53)	420 (1560)

Materials

Head, Shell, Plugs. . .	316L Stainless Steel
Internals.	316 Stainless Steel
Cover O-Ring.	EDPM

Maximum Operating Pressure

6-Round.	150 psi (10.3 bar) @ 200°F (93°C)
12-Round.	150 psi (10.3 bar) @ 200°F (93°C)
21-Round.	150 psi (10.3 bar) @ 200°F (93°C)

ORDERING INFORMATION

Catalog Number	*Description*	*Inlet/Outlet*
ZHGOF0610	6-round 10"	2" NPT
ZHGOF0620	6-round 20"	2" NPT
ZHGOF0630	6-round 30"	2" NPT
ZHGOF0640	6-round 40"	2" NPT
ZHGOF0610F	6-round 10"	2" flange
ZHGOF0620F	6-round 20"	2" flange
ZHGOF0630F	6-round 30"	2" flange
ZHGOF0640F	6-round 40"	2" flange
ZHFFI1230	12-round 30"	3" flange
ZHFFI1240	12-round 40"	3" flange
ZHFFI2130	21-round 30"	4" flange
ZHFFI2140	21-round 40"	4" flange
B10020279	Replacement O-ring EPDM - 6-round	
B10015430	Replacement O-ring EPDM - 12-round	

**Housing rating only, cartridge length and type will effect maximum flow rates*

HOUSING PRESSURE DROP vs. LIQUID FLOW RATE

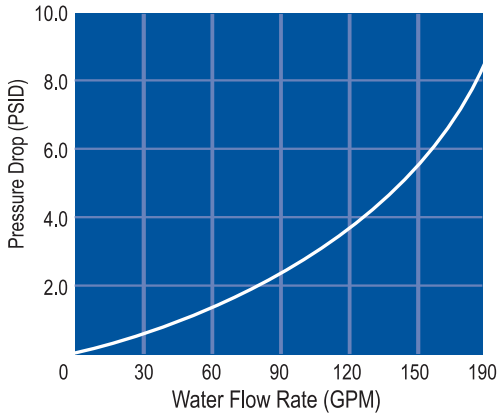

HOUSING PRESSURE DROP vs. LIQUID FLOW RATE

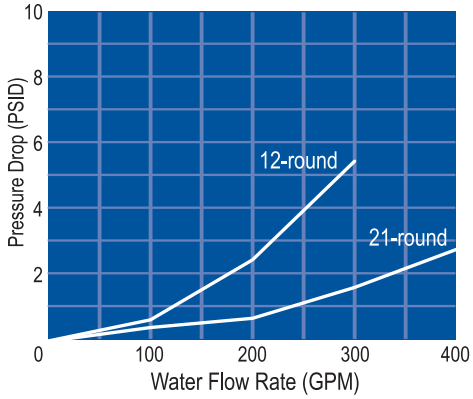

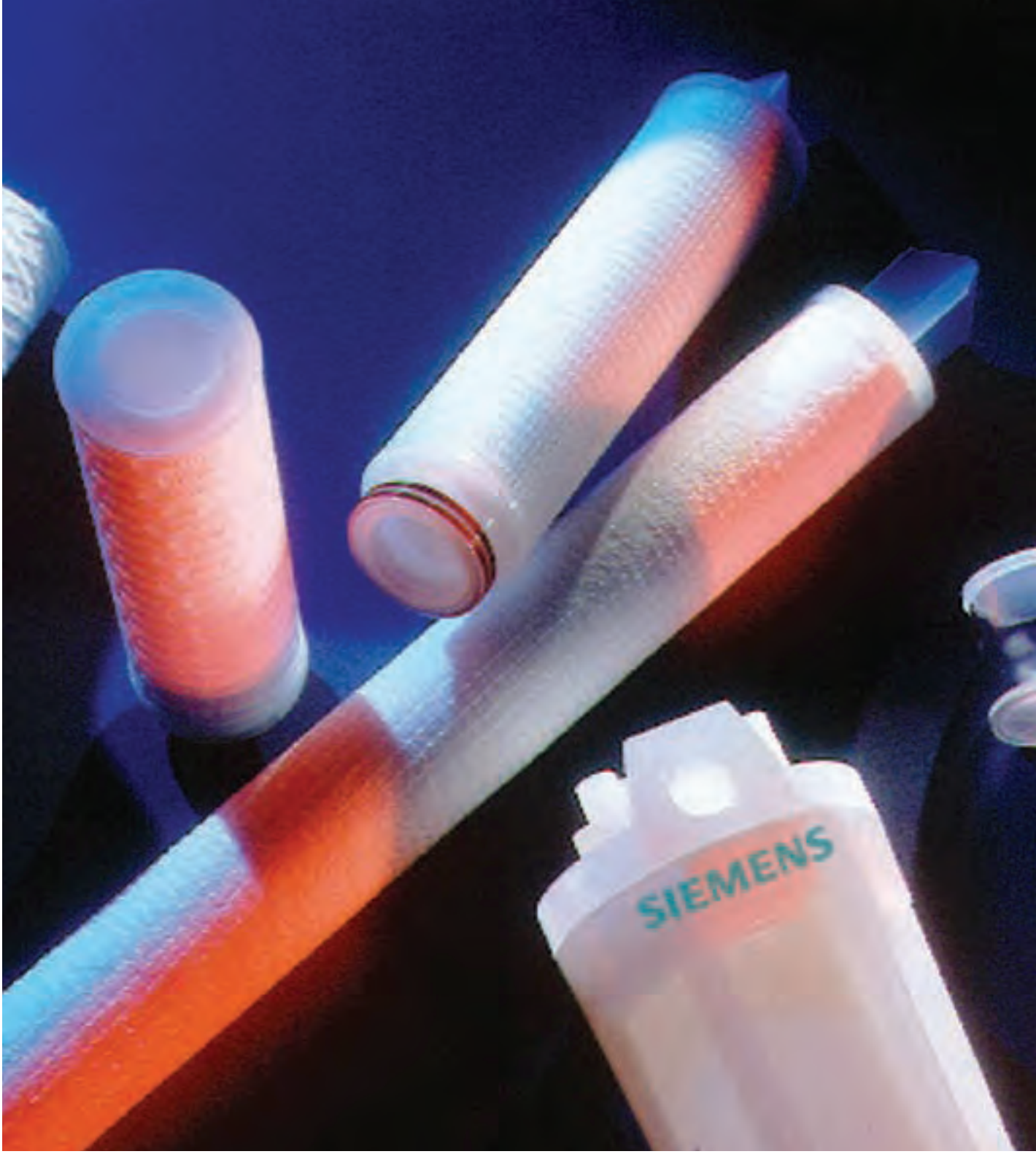

Cartridge Filters and Accessories

Water Technologies

SIEMENS

Prepure DP™ Graded Density Polypropylene Depth Media Filter Cartridge

- Composed of graded density melt blown polypropylene depth media for high efficiency prefiltration and post-filtration of DI resin applications
- Prepure DP™ filtration cartridges feature high contaminant loading due to graded density depth filtration media construction
- FDA Listed Materials - Manufactured from materials which are listed for food contact applications in Title 21 of the U.S. Code of Federal Regulations
- All components meet the specifications for biological safety as per the USP for Class VI-121˚C plastics (gaskets/O-rings excluded).
- Virgin polypropylene construction with fusion welding minimizes extractables

SPECIFICATIONS

Dimensions	
Diameter (OD)	2.6" (6.6 cm)
Length (in)	9.75, 10, 20, 30, 40
Materials	
Cartridge	Polypropylene caps, core and cage
Media	Non-woven melt blown polypropylene
Seals	Silicone o-rings and gaskets
Operating Parameters	
Maximum Temperature	180°F (82°C) @ 15 psid
Maximum Differential Pressure @ 20°C	75 psid (5.2 bard)
Filtration Efficiency	Nominal 90%
Recommended Water Flow Rates	
0.5 – 5 micron	2.0 gpm/10" length (7.6 lpm/10" length)
10 – 50 micron	5.0 gpm/10" length (18.9 lpm/10" length)
Sanitizing Agents	Chlorine or hydrogen peroxide

ORDERING INFORMATION

Catalog Number and Description

FCDP	All polypropylene depth filter cartridge
X	Cartridge Code: **0** = 2-222 o-rings **7** = 2-226 o-rings w/spear **1** = single open end w/internal o-ring **F** = double open end w/flat gasket seal
XX	Length (in): **09** = 9.75, **10** = 10, **20** = 20, **30** = 30, **40** = 40
XX	Micron Rating: **S5** = 0.5 μm, **01** = 1 μm, **03** = 3 μm, **05** = 5 μm, **10** = 10 μm, **25** = 25 μm, **50** = 50 μm

To determine your catalog order number, replace the X with one of the numbered or lettered options beside it. Note: Not all part number combinations are available; consult Technical Support for assistance.

FLOW RATE vs. INITIAL CLEAN PRESSURE DROP

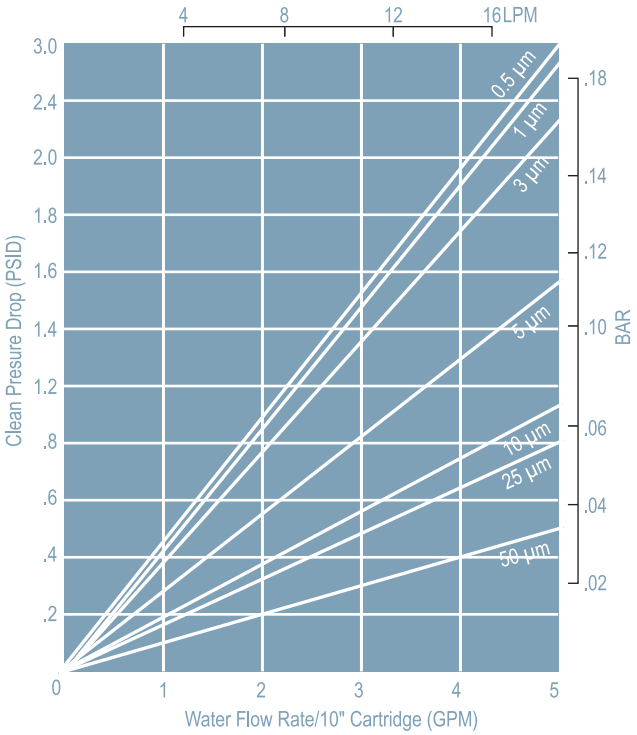

Media Grade	Nominal	99.9% Abs
S5	.5	1
1	1	3
3	3	5
5	5	10
10	10	20
25	25	40
50	50	70

PV® Series Liquid Phase Adsorbers

PV-500, PV-1000, PV-2000

Applications

The PV® Series adsorbers are designed for use in a wide range of low/high flow and pressure applications.

- Groundwater remediation
- Wastewater filtration
- Tank rinse water treatment
- Pilot testing
- Underground storage tank clean up
- Leachate treatment
- Dechlorination
- Spill cleanup
- Hydrotesting
- Drinking Water

Installation, Startup and Operation

Siemens can provide a total service package that includes utilizing OSHA trained personnel providing on-site carbon changeouts, packaging and transportation of spent carbon for recycling at our reactivation facilities.

At the time of purchase or rental of the adsorbers, arrangements should be made for the reactivation of the spent carbon. Siemens will provide instructions and assistance on how to obtain acceptance of the spent carbon at our reactivation facilities. Spent carbon cannot be accepted for reactivation until the acceptance process is completed.

Benefits & Design Features

- Durable, carbon steel construction includes internally/externally welded seams.
- SSPC-SP5 sandblasted, NSF-approved baked epoxy interior coating; urethane exterior finish.
- Approved for the transport of hazardous spent carbon.
- Top and side manways permit easy access and inspection of vessels internals and linings.
- Skid-mounted for easy handling and installation.
- Optimized underdrain system for low pressure drop operation.

Piping Manifold (Optional)

- 2"/3" sch 80 PVC piping and valves that allow either adsorber to be used in the lead or lag position (optional carbon steel and stainless steel piping).
- Series or parallel operation.
- Clean utility water connection for manual backflush.
- Sampling ports and pressure gauges.
- Flexible hoses with Kamlock fittings allow easy installation and removal during service exchange operations.
- Available for purchase or rental.

Specification/Typical Properties			
	PV®-500	PV®-1000	PV®-2000
Dimensions (Dia. x Overall Height – Approx.)	30" x 5'7"	48" x 5'7"	48" x 8'8"
Inlet Connection, (Top)	2"	3" NPT (Female)	3" NPT (Female)
Outlet Connection, (Bottom)	2"	3" NPT (Male)	3" NPT (Male)
Manway, Top & Lower Side	11" X 15" (top only)	11" X 15"	11" X 15"
Internal Piping	PVC	PVC	PVC
Interior Coating (All Units)	Epoxy	Epoxy	Epoxy
Exterior Coating (All Units)	Epoxy/Urethane	Epoxy/Urethane	Epoxy/Urethane
Carbon Fill Volume (Cu.ft.)	18.5	34	68
Vessel Weight (lbs.):			
Shipping (With Carbon)	1050	1910	3200
Operating (Approx.)	1750	4300	7500
Flow, GPM (Nominal)	25	50	100
Pressure, PSIG (Maximum)[1]	75	75	75
Temperature °F. (Maximum)	140	140	140
Pounds Of Activated Carbon	500	1000	2000
Contact Time @ Max Flow/Min	5	5	5
Backflush rate (GPM) @ 55°F	15-20	40-50	40-50

[1]The PV® Series adsorbers are not ASME code stamped. Pressure rating applies to liquid only.
For detailed dimensional information or drawings, contact your local Siemens sales representative.
For information on the HP® Series ASME code stamped adsorbers, contact your local Siemens representative.

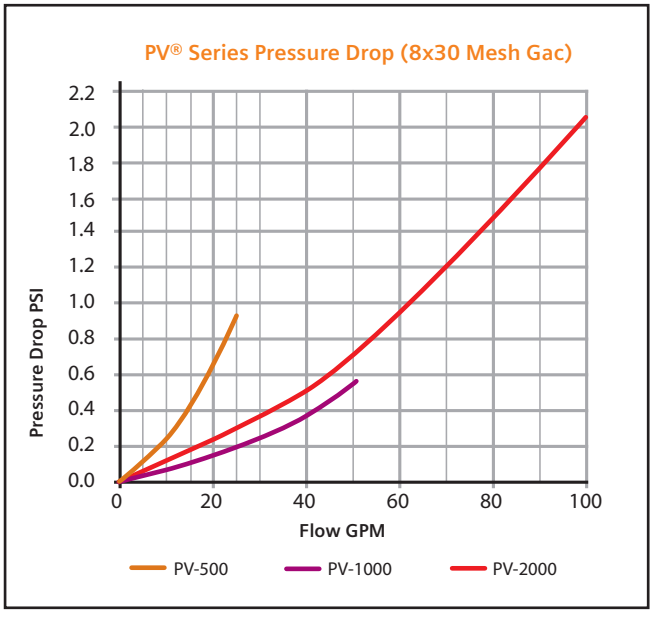

Safety Note: Wet activated carbon readily adsorbs atmospheric oxygen. Dangerously low oxygen levels may exist in closed vessels or poorly ventilated storage areas. Workers should follow all applicable state and federal safety guidelines for entering oxygen depleted areas.

All information presented herein is believed reliable and in accordance with accepted engineering practices. Siemens makes no warranties as to completeness of information. Users are responsible for evaluating individual product suitability for specific applications. Siemens assumes no liability whatsoever for any special, indirect or consequential damages arising from the sale, resale or misuse of its products.

Siemens
Water Technologies
866.613.5620 phone

© 2010 Siemens Water Technologies Corp.
WS-PV2dr-DS-0910
Subject to change without prior notice.

PV and HP are trademarks of Siemens, its subsidiaries or affiliates.

The information provided in this literature contains merely general descriptions or characteristics of performance which in actual case of use do not always apply as described or which may change as a result of further development of the products. An obligation to provide the respective characteristics shall only exist if expressly agreed in the terms of the contract.

Rev. 2 – 10/13/09

PV® SERIES
PV®500 / PV®1000 / PV®2000 / PV®5000
Installation and Start-Up Instructions

IMPORTANT: Read all instructions prior to start-up

FOR WATER USE ONLY. 75 PSIG MAX. OPERATING PRESSURE

The Evoqua Water Technologies **PV® SERIES** carbon adsorbers have been designed for easy and rapid installation. Final installation requires the connection of the **PV® SERIES** to the process outlet through the use of pipes or flexible hoses. The following instructions must be followed prior to system start-up:

1. Place the **PV® SERIES** adsorber in an area close to the contaminated water source and accessible to maintenance personnel. The **PV® SERIES** adsorber is self-supporting and therefore requires no special stand or support pad. The area chosen for locating the **PV® SERIES** adsorber should be level, flat and capable of supporting an operating weight up to 1,750 lbs for the PV®500, 4,300 lbs for the PV®1000, 7,500 lbs for the PV®2000 and 17,600 lbs for the PV®5000.

2. Remove protective shipping plugs from inlet and outlet and save them for future storage and shipping.

3. Connect to the inlet and outlet connections. Be sure that the outlet has a vertical section that extends to a height equal to, or greater than, the top of the **PV® SERIES** adsorber**.** This will assure that the **PV® SERIES** adsorber is full of water during operation.

4. A. Carbon Soaking

   Fill the **PV® SERIES** adsorber (through the outlet is preferred) with uncontaminated water and allow the carbon to soak for at least 24 hours. This is an important step in removing the air contained within the pores of the activated carbon matrix. Removal of trapped air makes all the pore volume and surface area of the activated carbon available for adsorption of contaminants. A poorly "conditioned" bed that contains trapped air can be a major factor leading to premature bed breakthroughs, high carbon usage rates, and over pressurization.

   B. Initial Backflushing

   Initial backflushing helps in removing any small air bubbles that have a tendency to cling to the surface of the carbon particles and are difficult to remove by soaking alone. This is performed by flowing water through the **PV® SERIES** adsorber in an upflow direction.

   Due to its nature, granular activated carbon will always have fine particles that are associated with and loosely adhered to the external surface of the larger granular activated carbon particles. Backflushing will remove these carbon fines.

All information presented herein is believed reliable and in accordance with accepted engineering practices. Evoqua makes no warranties as to completeness of information. Users are responsible for evaluating individual product suitability for specific applications. Siemens assumes no liability whatsoever for any special, indirect or consequential damages arising from the sale, resale or misuse of its products.

Evoqua reserves the right to change the specifications referred to in this literature at any time, without prior notice.

Evoqua Water Technologies 2430 Rose Place Roseville, MN 55113 Tel: 800.525.0658 www.evoqua.com

Backflush the **PV® SERIES** adsorber with **uncontaminated water** at a rate of 15-20 gpm for the PV®500, 40-50 gpm for the PV®1000 and PV®2000 and 90-100 gpm for the PV®5000. Backflushing will require at least 3 carbon bed volumes of water and will take about 15-20 minutes to complete depending on the water flow rate.

The water that is discharged will initially contain carbon fines but will soon become clear. Care should be taken to remove these fines so they do not enter the **PV® SERIES** adsorber upon start-up. Note: If the fines have not cleared within this period, then continue backflushing until the fines clear.

5. Evoqua Water Technologies LLC. strongly suggests that the completed installation include a pressure relief valve and a particulate filter upstream of the **PV® SERIES** adsorber**.** For information regarding these devices, please call your Evoqua Water Technologies LLC. Technical Sales Representative. Evoqua Water Technologies LLC., a full service company, offers this equipment as an option.

6. The **PV® SERIES** adsorber is designed for continuous use with little or no maintenance. Occasional backflushing with clean uncontaminated water as described above under item 4B may be required to remove particulate buildup on the carbon.

   We recommend backflushing only if experiencing an unacceptable pressure drop through the **PV® SERIES** adsorber. Under no circumstances should the inlet pressure exceed the design pressure of 75 psig.

7. Once operational, the **PV® SERIES** adsorber will continue to remove contaminants with little or no maintenance, until the carbon is spent. Contact your Technical Sales Representative for service, removal, and/or reactivation of spent carbon.

NOTE: Studies conducted have shown that low oxygen content exists in adsorbers containing wet carbon. Laboratory experiments conducted since that time also have revealed that commercial activated carbons in a wet or moist condition will lower the oxygen content of an isolated space.

All information presented herein is believed reliable and in accordance with accepted engineering practices. Evoqua makes no warranties as to completeness of information. Users are responsible for evaluating individual product suitability for specific applications. Evoqua assumes no liability whatsoever for any special, indirect or consequential damages arising from the sale, resale or misuse of its products.

Evoqua reserves the right to change the specifications referred to in this literature at any time, without prior notice.

CONNECTION SIZES

MODEL	INLET SIZE	OUTLET SIZE	LOCATION
PV®500	2" half coupling*	2" half coupling*	Top/Bottom
PV®1000 / PV®2000	3" FNPT*	3" FNPT*	Top/Bottom
PV®5000	4" 150# Flange	4" 150# Flange	Top/Lower Side

* Optional fittings can be provided based on specific site requirements.

OPERATING CONDITIONS

	MAXIMUM			
	PV®500	PV®1000	PV®2000	PV®5000
Flow, gpm (max)	25	50	100	250
Pressure, psig* (max)	75	75	75	75
Temperature (^oF)	140	140	140	140
Carbon Fill (lbs.)	500	1,000	2,000	5,000
Shipping Weight, approximate (lbs.)	1,050	1,910	3,200	8,300 **
Operating Weight approximate (lbs.)	1,750	4,300	7,500	17,600

* Optional Pressures and ASME Code Stamp Available

** Adsorber shipped empty (no carbon)

FOR ADDITIONAL INFORMATION, PLEASE CONTACT YOUR NEAREST CARBON SERVICE BRANCH AT:

866-613-5620

All information presented herein is believed reliable and in accordance with accepted engineering practices. Evoqua makes no warranties as to completeness of information. Users are responsible for evaluating individual product suitability for specific applications. Evoqua assumes no liability whatsoever for any special, indirect or consequential damages arising from the sale, resale or misuse of its products.

Evoqua reserves the right to change the specifications referred to in this literature at any time, without prior notice.

9000X AF Drives

User Manual

May 2011
Supersedes June 2009

Powering Business Worldwide

Disclaimer of Warranties and Limitation of Liability

The information, recommendations, descriptions, and safety notations in this document are based on Eaton Electrical Inc. and/or Eaton Corporation's ("Eaton") experience and judgment, and may not cover all contingencies. If further information is required, an Eaton sales office should be consulted.

Sale of the product shown in this literature is subject to the terms and conditions outlined in appropriate Eaton selling policies or other contractual agreement between Eaton and the purchaser.

THERE ARE NO UNDERSTANDINGS, AGREEMENTS, WARRANTIES, EXPRESSED OR IMPLIED, INCLUDING WARRANTIES OF FITNESS FOR A PARTICULAR PURPOSE OR MERCHANTABILITY, OTHER THAN THOSE SPECIFICALLY SET OUT IN ANY EXISTING CONTRACT BETWEEN THE PARTIES. ANY SUCH CONTRACT STATES THE ENTIRE OBLIGATION OF EATON. THE CONTENTS OF THIS DOCUMENT SHALL NOT BECOME PART OF OR MODIFY ANY CONTRACT BETWEEN THE PARTIES. In no event will Eaton be responsible to the purchaser or user in contract, in tort (including negligence), strict liability or otherwise for any special, indirect, incidental, or consequential damage or loss whatsoever, including but not limited to damage or loss of use of equipment, plant or power system, cost of capital, loss of power, additional expenses in the use of existing power facilities, or claims against the purchaser or user by its customers resulting from the use of the information, recommendations, and descriptions contained herein.

The information contained in this manual is subject to change without notice.

Cover Photo: SVX9000/SPX9000 AF Drives.

Support Services

The goal of Eaton is to ensure your greatest possible satisfaction with the operation of our products. We are dedicated to providing fast, friendly, and accurate assistance. That is why we offer you so many ways to get the support you need. Whether it's by phone, fax, or e-mail, you can access Eaton's support information 24 hours a day, seven days a week. Our wide range of services is listed below.

You should contact your local distributor for product pricing, availability, ordering, expediting, and repairs.

Web Site

Use the Eaton Web site to find product information. You can also find information on local distributors or Eaton's sales offices.

Web Site Address

www.eaton.com/drives

EatonCare Customer Support Center

Call the EatonCare Support Center if you need assistance with placing an order, stock availability or proof of shipment, expediting an existing order, emergency shipments, product price information, returns other than warranty returns, and information on local distributors or sales offices.

Voice: 877-ETN-CARE (877-386-2273) (8:00 a.m.–6:00 p.m. Eastern Time U.S. [UTC –5])

FAX: 800-752-8602

After-Hours Emergency: 800-543-7038
(6:00 p.m.–8:00 a.m. Eastern Time U.S. [UTC –5])

If you are in the U.S. or Canada, and have OI or PLC questions, you can take advantage of our toll-free line for technical assistance with hardware and software product selection, system design and installation, and system debugging and diagnostics. Technical support engineers are available for calls during regular business hours.

Drives Technical Resource Center

Voice: 800-322-4986 or +1 828-651-0984 (8:00 a.m.–5:00 p.m. Central Time U.S. [UTC –6])
Fax: +1 920-262-6070
e-mail: TRCDrives@Eaton.com

For Customers in Europe, Contact:

Eaton Industries GmbH
Electrical Sector
After Sales Service
Hein-Moeller-Str. 7-11
D-53115 Bonn

Phone: +49 (0) 228 6 02-3640
Fax: +49 (0) 228 6 02-61400
Hotline: +49 (0) 180 5 223822

e-mail: AfterSalesEGBonn@Eaton.com
www.moeller.net/aftersales

Table of Contents

SAFETY
Definitions and Symbols viii
Hazardous High Voltage viii

OVERVIEW
How to Use This Manual 1
Receiving and Inspection 1
Open SVX9000/SPX9000 Catalog Numbers 2

MOUNTING
Space Requirements 3
Environmental Requirements 4
Standard Mounting Instructions 4

POWER WIRING
Guidelines 5
UL Compatible Cable Selection and Installation 6
UL Compatible Cable Selection and Installation with Breaker 10
Installation Instructions 12
Standard Wiring Diagrams and Terminal Locations 14
Power and Motor Wiring Terminals 17
Checking the Cable and Motor Insulation 20

CONTROL WIRING
General Information 21
Control Wiring Details 23

MENU INFORMATION
Keypad Operation 28
Menu Navigation 30

STARTUP
Safety Precautions 47
Overview 47
Sequence of Operation to Commission an Induction Motor 48
Manual Tuning of the SVX9000/SPX9000 50
Closed Loop Vector Control Manual Tuning (SPX9000 Only) 55

Table of Contents, continued

TECHNICAL DATA
General 58
Specifications 59
SVX9000/SPX9000 Series Drives 61
Dimensions 64
EMC Capability 80
Declaration of Conformity 80
Warranty and Liability Information 80

FAULT AND WARNING CODES
Fault Codes. 81

TROUBLESHOOTING CHARTS USING FAULT CODES
Using Fault Codes 84

SPARE PARTS
Series Option Board Kits 111
Johnson Controls Metasys N2 Network Communications 113
Drive Options 114
Spare Units and Replacement Parts for 9000X Drives 115

List of Figures

SVX9000/SPX9000 AF Drive Catalog Numbering System 2
Input Power and Motor Cable Stripping and Wire Lengths 12
Wiring Plate 13
Ground Terminal Locations 13
Cable Protection Plate 14
Principle Wiring Diagram of SVX9000/SPX9000 Power Unit, FR7 and FR8 15
Principle Wiring Diagram of SVX9000/SPX9000 Power Unit, FR9 to FR10 16
Frame Size: FR4 (230V, 3/4–3 hp and 480V, 1–5 hp) 17
Frame Size: FR5 (230V, 5–7-1/2 hp and 480V, 7-1/2–15 hp) 17
Frame Size: FR6 (230V, 10–15 hp, 480V, 20–30 hp and 575V, 2–25 hp) 18
Frame Size: FR7 (230V, 20–30 hp, 480V, 40–60 hp and 575V, 30–40 hp) 18
Frame Size: FR8 (480V, 75–125 hp and 575V, 50–75 hp) 19
Frame Size: FR9 (480V, 150–200 hp and 575V, 100–175 hp) 19
Option Board Slots 21
Option Board A9 Wiring Diagram 23
Option Board A9 Jumper Location and Settings 25
Option Board A2 Wiring Diagram 26
Option Board A2 Terminal Locations 26
Positive Logic 27
Negative Logic 27
Keypad and Display 28
Main Menu Navigation 31
Parameter Menu Structure Example 32
M2 Keypad Control Menu 33
Active Fault Display Example 34
Sample Fault History Display 36
System Menu Structure 36
Expander Board Menu Structure 43
Digital Inputs— DIN1, DIN2, DIN3 Status 44
Digital Inputs— DIN4, DIN5, DIN6 Status 44
Digital and Relay Outputs— DO1, RO1, RO2 Status 44
Operate Menu Navigation 45
Open Loop Tuning 50
Motor Current after V/f Curve Tuning 52
Motor Current Equivalent Circuit 53
OL Speed Control Off OL Speed Control On 54
Closed Loop Motor Voltage 55
Closed Loop Current Limit 57
SVX9000/SPX9000 Block Diagram 58
NEMA Type 1 and Type 12 Enclosure Dimensions 64
NEMA Type 1 and Type 12 with Flange Kit, FR4, FR5, and FR6 Enclosure Dimensions 65
NEMA Type 1 with Flange Kit, FR7, and FR8 Enclosure Dimensions 66
FR9 Enclosure Dimensions 67
FR9 with Flange Kit Enclosure Dimensions 68
SPX9000, FR10 Open Chassis 69
SPX9000, FR11 Open Chassis 70
SPX9000, FR13 Open Chassis Inverter 71
SPX9000, FR13 Open Chassis Converter 72
SPX9000, FR13 Open Chassis Converter—900/1000 hp 480V 73

List of Figures, continued

AC Choke—CHK0650 74
AC Choke—CHK0520 75
AC Choke—CHK0400 76
AC Choke—CHK0261 77
Control Unit—SPX9000 FR10–FR14 78
Control Unit with Star-Coupler Board, FR12 or FR14 Only 79
F1—Overcurrent 84
F2—Overvoltage 85
F3—Earth Fault 86
F5—Charging Switch 87
F6—Emergency Stop 88
F7—Saturation Trip 89
F8—System Fault 90
F9—Undervoltage 91
F10—Input Line Supervision 92
F11—Output Phase Supervision 93
F12—Brake Chopper Supervision 94
F13—Frequency Converter Under Temperature 95
F14—Frequency Converter Over Temperature 96
F15—Motor Stalled 97
F16—Motor Over Temperature 98
F17—Motor Under Load 99
F22—Param Fault 100
F24—Counter Fault 100
F25—Microprocessor Watchdog Fault 100
F31—IGBT Temperature (Hardware) 101
F32—Fan Cooling 102
F36—Control Unit 103
F37—Device Change 103
F38—Device Added (Indication Only) 103
F39—Device Removed 103
F40—Device Unknown 104
F41—IGBT Temperature 105
F42—Brake Resistor Over Temperature 106
F44—DevParChange 107
F45—DevParAdded 108
F50—Analog Input Iin <4 mA 108
F51—External Fault 109
F52—Keypad Communication Fault 110
9000X Series Option Boards 111
Catalog Number Selection 124

List of Tables

Space Requirements for Mounting an SVX9000/SPX9000 Drive 3
Cooling Airflow Requirements 5
Cable Spacing 5
40°C Cable and Fuse Sizes—230V Ratings 6
40°C Cable and Fuse Sizes—480V Ratings 6
40°C Cable and Fuse Sizes—575V Ratings 7
Cable and Bus Bar Sizes, SPX FR10–FR12—480V Ratings 8
Cable and Bus Bar Sizes, SPX FR13–FR14—480V Ratings 8
Cable and Bus Bar Sizes, SPX FR10–FR12—575V Ratings 9
Cable and Bus Bar Sizes, SPX FR13–FR14—575V Ratings 9
Cable and Breaker Sizes—230V Ratings. 10
Cable and Breaker Sizes—480V Ratings. 10
Cable and Breaker Sizes—575V Ratings. 11
Power Connection Tightening Torque 12
Power and Motor Cable Stripping Lengths. 13
Tightening Torques of Terminals 21
Control Wiring Instructions 22
Option Board A9 Terminal Descriptions 24
Option Board A2 Terminal Descriptions 26
LCD Status Indicators 28
Navigation Buttons 29
Fault Types 35
Fault Time Data 35
Total Counters 41
Trip Counters. 41
Software Information 41
Application Information 42
Hardware Information 42
Expander Board Information 42
Monitoring Menu Items—Standard Application Example 44
Operate Menu Items—Standard Application Example 45
SVX9000/SPX9000 Drive Specifications 59
208–240V Power Ratings—NEMA Type 1/IP21 or NEMA Type 12/IP54 61
380–500V Power Ratings—NEMA Type 1/IP21 or NEMA Type 12/IP54 62
525–690V Power Ratings—NEMA Type 1/IP21 or NEMA Type 12/IP54 63
Fault Type Categories 81
Fault Codes 81
Option Board Kits 111
Control Panel Factory Options 114
9000X Spare Units 115
Replacement Parts—9000X Drives, 208–240V. 115
Replacement Parts—FR4–FR9 9000X Drives, 380–500V 117
Replacement Parts—FR10–FR12 9000X Drives, 380–500V 119
Replacement Parts—FR6–FR9 9000X Drives, 525–690V 121
Replacement Parts—FR10–FR12 9000X Drives, 525–690V 123

Safety

Definitions and Symbols

WARNING

This symbol indicates high voltage. It calls your attention to items or operations that could be dangerous to you and other persons operating this equipment. Read the message and follow the instructions carefully.

This symbol is the "Safety Alert Symbol." It occurs with either of two signal words: CAUTION or WARNING, as described below.

WARNING

Indicates a potentially hazardous situation which, if not avoided, can result in serious injury or death.

CAUTION

Indicates a potentially hazardous situation which, if not avoided, can result in minor to moderate injury, or serious damage to the product. The situation described in the CAUTION may, if not avoided, lead to serious results. Important safety measures are described in CAUTION (as well as WARNING).

Hazardous High Voltage

WARNING

Motor control equipment and electronic controllers are connected to hazardous line voltages. When servicing drives and electronic controllers, there may be exposed components with housings or protrusions at or above line potential. Extreme care should be taken to protect against shock.

Stand on an insulating pad and make it a habit to use only one hand when checking components. Always work with another person in case an emergency occurs. Disconnect power before checking controllers or performing maintenance. Be sure equipment is properly grounded. Wear safety glasses whenever working on electronic controllers or rotating machinery.

CAUTION

Remove any External Start signals or permissives before resetting the fault to prevent an unintentional restart of the SVX9000/SPX9000, which could result in personal injury or equipment damage.

WARNING

1. **Before startup, observe the warnings and safety instructions provided throughout this manual. Internal components and circuit boards (except the isolated I/O terminals) are at utility potential when the SVX9000/SPX9000 is connected to the line. This voltage is extremely dangerous and may cause death or severe injury if you come in contact with it.**
2. **When the SVX9000/SPX9000 is connected to the utility, the motor connections U (T1), V (T2), W (T3) and DC bus/brake resistor connections B–, B+, and R– are live even if the motor is not running.**
3. **Do not make any connections when the AF drive is connected to the utility line.**
4. **Do not open the cover of the AF drive immediately after disconnecting power to the unit, because components within the drive remain at a dangerous voltage potential for some time. Wait at least five minutes after the cooling fan has stopped and the keypad or cover indicators are dark before opening the SVX9000/SPX9000 cover.**
5. **The control I/O terminals are isolated from the utility potential, but relay outputs and other I/Os may have dangerous external voltages connected even if power is disconnected from the SVX9000/SPX9000.**
6. **Before connecting to the utility, make sure that the cover of the drive is closed.**

Overview

This chapter describes the purpose and contents of this manual, the receiving inspection recommendations, and the SVX9000/SPX9000 catalog numbering system.

How to Use This Manual

The purpose of this manual is to provide you with information necessary to install, set, and customize parameters, startup, troubleshoot and maintain the Eaton SVX9000/SPX9000 AF drives by Eaton's electrical business. To provide for safe installation and operation of the equipment, read the safety guidelines at the beginning of this manual and follow the procedures outlined before connecting power to the SVX9000/SPX9000. Keep this user manual handy and distribute to all users, technicians, and maintenance personnel for reference along with the appropriate application manual.

Receiving and Inspection

This SVX9000/SPX9000 AC drive has met a stringent series of factory quality requirements before shipment. It is possible that packaging or equipment damage may have occurred during shipment. After receiving your SVX9000/SPX9000 drive, please check for the following:

- Check to make sure that the package(s) includes the proper drive, the User Manual, and rubber conduit covers, screws, conduit plate, and ground straps
- Inspect the unit to ensure it was not damaged during shipment
- Make sure that the part number indicated on the nameplate corresponds with the catalog number on your order

If shipping damage has occurred, please contact the carrier involved and file a claim immediately.

If the delivery does not correspond to your order, please contact your Eaton representative.

Note: Do not destroy the packing. The template printed on the protective cardboard can be used for marking the mounting points of the SVX9000/SPX9000 AF drives on the wall or cabinet.

Open SVX9000/SPX9000 Catalog Numbers

SVX9000/SPX9000 AF Drive Catalog Numbering System

SVX 007 A 1 - 4 A 1 B 1 _ _ _ _ _ _

Product

SVX = SVX industrial drive
SPX = SPX drive

AFD Software Series

A = Standard software

Horsepower (I_H) ①②

F07 = 3/4	**150** = 150
001 = 1	**200** = 200
F15 = 1-1/2	**250** = 250
002 = 2	**300** = 300
003 = 3	**350** = 350
004 = 5 IL only	**400** = 400
005 = 5	**500** = 500
006 = 7-1/2 IL only	**550** = 550
007 = 7-1/2	**600** = 600
010 = 10	**650** = 650
015 = 15	**700** = 700
020 = 20	**800** = 800
025 = 25	**900** = 900
030 = 30	**H10** = 1000
040 = 40	**H12** = 1200
050 = 50	**H13** = 1350
060 = 60	**H15** = 1500
075 = 75	**H16** = 1600
100 = 100	**H20** = 2000
125 = 125	

Enclosure ③

0 = Open chassis
1 = NEMA Type 1
2 = NEMA Type 12

Voltage

2 = 208–230V
4 = 380–500V
5 = 525–690V

Keypad

A = AlphaNumeric

Input Options ①②

1 = Three-phase, EMC H
2 = Three-phase, EMC N
4 = Three-phase, EMC L

Braking

N = No brake chopper ④⑥
B = Internal brake chopper ⑤⑦

Board Modifications

1 = Standard boards (A9, A2) ⑧

Options

Options appear in alphabetical order

Extended I/O Card Options

A3 = 2 RO, therm
A4 = Encoder low volt +5V/15V24V ⑨
A5 = Encoder high volt +15V/24V ⑨
A7 = Double encoder ⑨
A8 = 6 DI, DO, 2 AI, 1AO
AE = 3 DI (encoder 10–24V), out +15V/+24V
2 DO (pulse + direction)
AF = Safe disable ⑨
B1 = 6 DI, 1 ext +24 Vdc/ext + 24 Vdc
B2 = 1 RO (NC/NO), 1 therm
B4 = 1 AI (mA isolated), 2 AO (mA isolated),
1 ext +24 Vdc/ext +24 Vdc
B5 = 3 RO (NO)
B8 = 1 ext +24 Vdc/ext + 24 Vdc, 3 Pt100
B9 = 1 RO (NO), 5 DI 42—24 Vac input
BB = SPI, absolute encoder

Communication Cards

CA = Johnson controls N2
CI = Modbus TCP
CJ = BACnet
CQ = Ethernet IP
C2 = Modbus
C3 = PROFIBUS DP
C4 = LonWorks
C5 = PROFIBUS DP (D9 connector)
C6 = CANopen (slave)
C7 = DeviceNet
C8 = Modbus (D9 type connector)
D1 = Adapter ⑨
D2 = Adapter ⑨
D3 = RS-232 with D9 connection

Notes

① All 230V drives and 480V drives up to 200 hp (I_H) are only available with input option **1**.
② 480V drives 250 hp (I_H) or larger are only available with input option **2**.
③ 480V drives 250 hp, 300 hp and 350 hp (I_H) are only available with enclosure style **0** (chassis).
④ 480V drives up to 30 hp (I_H) are only available with brake chopper option **B.**
⑤ 230V drives up to 15 hp (I_H) are only available with brake chopper option **B.**
⑥ 480V drives 40 hp (I_H) and larger come with brake chopper option **N** as standard.
⑦ 230V drives 20 hp (I_H) or larger come with brake chopper option **N** as standard.
⑧ Factory promise delivery. Consult Sales Office for availability.
⑨ SPX9000 drives only.

Mounting

The SVX9000/SPX9000 drive may be mounted side-by-side or stacked vertically, as outlined in the following section.

Space Requirements

If several units are mounted above each other, the clearance between the drives should equal C + D (see table and figure on this page). In addition, the outlet air used for cooling the lower unit must be directed away from the inlet air used by the upper unit.

To ensure proper air circulation and cooling, follow the guidelines below.

Space Requirements for Mounting an SVX9000/SPX9000 Drive

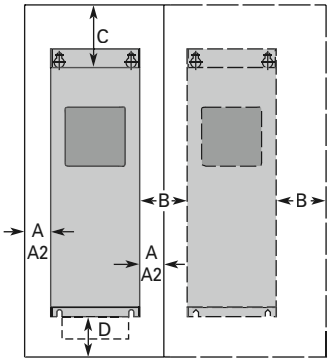

Frame	Drive Type	Approximate Dimensions in Inches (mm) ①① A ②	A_2 ③	B ④	C ⑤	D ⑥
4	230V, 1–3 hp I_L, 3/4–3 hp I_H	0.8 (20)	—	0.8 (20)	3.9 (100)	2.0 (50)
	480V, 1–5 hp I_H, 1-1/2–7-1/2 hp I_L					
5	230V, 5–10 hp I_L, 5–7-1/2 hp I_H	1.2 (30)	—	0.8 (20)	4.7 (120)	2.4 (60)
	480V, 7-1/2–15 hp I_H, 10–20 hp I_L					
6	230V, 15–20 hp I_L, 10–15 hp I_H	1.2 (30)	—	0.8 (20)	6.3 (160)	3.1 (80)
	480V, 20–30 hp I_H, 25–40 hp I_L					
	575V, 2–25 hp I_H, 3–30 hp I_L					
7	230V, 25–40 hp I_L, 20–30 hp I_H	3.1 (80)	—	3.1 (80)	11.8 (300)	3.9 (100)
	480V, 40–60 hp I_H, 50–75 hp I_L					
	575V, 30–40 hp I_H, 40–50 hp I_L					
8	480V, 75–125 hp I_H, 100–150 hp I_L	3.1 (80)	5.9 (150)	3.1 (80)	11.8 (300)	7.9 (200)
	575V, 50–75 hp I_H, 60–100 hp I_L					
9	480V, 200–250 hp I_L, 150–200 hp I_H	2.0 (50)	—	3.1 (80)	15.7 (400)	9.8 (250)
	575V, 100–150 hp I_H, 150–200 hp I_L					13.8 (350) ⑦

Notes

① Dimensions represent the minimum clearance needed when mounting an SVX9000/SPX9000. See figure above.
② A = clearance around the SVX9000/SPX9000.
③ A_2 = clearance needed to change the fan without disconnecting the motor cables.
④ B = distance between adjacent SVX9000/SPX9000 drives or between the SVX9000/SPX9000 and an enclosure wall.
⑤ C = clearance above the SVX9000/SPX9000.
⑥ D = clearance below the SVX9000/SPX9000.
⑦ Minimum clearance below the SVX9000/SPX9000 needed to change the fan.

Environmental Requirements

Ensure that the environment meets the requirements listed in the table on **Pages 59** and **60** for any storage or operating situation.

The table below specifies the minimum airflow required in the area where the drive will be mounted.

Cooling Airflow Requirements

Drive Type	Cooling Air Required
230V, 3/4–3 hp I_H	41 cfm (70 m^3/h)
480V, 1–5 hp I_H	
230V, 5–7-1/2 hp I_H	112 cfm (190 m^3/h)
480V, 7-1/2–15 hp I_H	
230V, 10–15 hp I_H	250 cfm (425 m^3/h)
480V, 20–30 hp I_H	
575V, 2–25 hp I_H	
230V, 20–30 hp I_H	250 cfm (425 m^3/h)
480V, 40–60 hp I_H	
575V, 30–40 hp I_H	
480V, 75–125 hp I_H	383 cfm (650 m^3/h)
575V, 60–75 hp I_H	
480V, 150–200 hp I_H	765 cfm (1300 m^3/h)
575V, 100–150 hp I_H	
480V, 250–350 hp I_H	1530 cfm (2600 m^3/h)
575V, 200–300 hp I_H	
480V, 400–550 hp I_H	2295 cfm (3900 m^3/h)
575V, 400–500 hp I_H	
480V, 600–700 hp I_H	3060 cfm (5200 m^3/h)
575V, 550–700 hp I_H	

Standard Mounting Instructions

1. Measure the mounting space to ensure that it allows for the minimum space surrounding the drive. Drive dimensions are in "Dimensions" starting on **Page 64**.
2. Make sure the mounting surface is flat and strong enough to support the drive, is not flammable, and is not subject to excessive motion or vibration.
3. Ensure that the minimum airflow requirements for your drive are met at the mounting location.
4. Mark the location of the mounting holes on the mounting surface, using the template provided on the cover of the cardboard shipping package.
5. Using fasteners appropriate to your drive and mounting surface, securely attach the drive to the mounting surface using all four screws or bolts.

Power Wiring

Guidelines

To ensure proper wiring, use the following guidelines:

- Use heat-resistant copper cables only, 75°C or higher
- The input line cable and line fuses must be sized in accordance with the rated input current of the unit. See **Pages 6–9**
- Provide a ground wire with both input power and output motor leads

The control should be installed in accordance with all applicable codes. In accordance with NEC 430 Part IV, a protective device is required in the installation of the control. This protective device can be either a fuse or a circuit breaker. An RK fuse is an acceptable component. For maximum protection, Eaton recommends a Class T fuse.

Input line cable and line fuses must be sized in accordance with tables on **Pages 6–9**.

- If the motor temperature sensing is used for overload protection, the output cable size may be selected based on the motor specifications
- If three or more shielded cables are used in parallel for the output on the larger units, every cable must have its own overload protection
- Avoid placing the motor cables in long parallel lines with other cables
- If the motor cables run in parallel with other cables, note the minimum distances between the motor cables and other cables given in the following table

Cable Spacing

Minimum Distance Between Cables in ft (m)	Cable in ft (m)
1 (0.3)	≤164 (50)
3.3 (1.0)	≤656 (200)

Note: The cable spacings also apply between the motor cables and signal cables of other systems.

- The maximum lengths of the motor cables are as follows:
  - 1–2 hp, 230V units, 328 ft (100m)
  - All other hp units, 984 ft (300m)
- The motor cables should cross other cables at an angle of 90 degrees
- If conduit is being used for wiring, use separate conduits for the input power wiring, the output power wiring, the signal wiring, and the control wiring

SVX9000/SPX9000 Drive Short-Circuit Current Rating

The SVX9000/SPX9000 drive has a maximum symmetrical short-circuit current (ISC) rating of 100 kA rms. The ISC ampere rating is in accordance with the requirements of UL 508C "Standard for Power Conversion Equipment". These requirements cover "open or enclosed equipment that supplies power to control a motor or motors operating at a frequency or voltage different than that of the input supply" including devices rated 1500 volts or less. The SVX9000/SPX9000 drive series uses an electronic overcurrent protection feature for compliance with the UL 508C requirement.

Branch circuit protection must be provided in accordance with local codes.

UL Compatible Cable Selection and Installation

Use only copper wire with temperature rating of at least 75°C.

40°C Cable and Fuse Sizes—230V Ratings

I_L hp	Frame Size	NEC I (A)	I (A)	Fuse ① Quantity	Fuse (A)	Wire Size AWG Power	Wire Size AWG Ground	Terminal Size Power	Terminal Size Ground
1	FR4	4.2	4.8	3	10	14	14	16–12	16–14
1-1/2		6	6.6	3	10	14	14	16–12	16–14
2		6.8	7.8	3	10	14	14	16–12	16–14
3		9.6	11	3	15	14	14	16–12	16–14
5	FR5	15.2	17.5	3	20	12	12	16–8	16–8
7-1/2		22	25	3	30	10	10	16–8	16–8
10		28	31	3	40	8	8	16–8	16–8
15	FR6	42	48	3	60	4	8	14–1/0	10–2
20		54	61	3	80	2	6	14–1/0	10–2
25	FR7	68	72	3	100	2	6	14–1/0	10–2/0
30		80	87	3	110	1	6	14–1/0	10–2/0
40		104	114	3	125	1/0	4	14–1/0	10–2/0
50	FR8	130	140	3	175	3/0	2	4–3/0	4–3/0
60		154	170	3	200	4/0	I/0	3/0–350 kcmil	4–3/0
75		192	205	3	250	300	2/0	3/0–350 kcmil	4–3/0
100	FR9	248	261	3	300	2 x 4/0	3/0	2 x 3/0–350 kcmil	4–3/0

40°C Cable and Fuse Sizes—480V Ratings

I_L hp	Frame Size	NEC I (A)	I (A)	Fuse ① Quantity	Fuse (A)	Wire Size AWG Power	Wire Size AWG Ground	Terminal Size Power	Terminal Size Ground
1-1/2	FR4	3	3.3	3	10	14	14	16–12	16–14
2		3.4	4.3	3	10	14	14	16–12	16–14
3		4.8	5.6	3	10	14	14	16–12	16–14
5		7.6	7.6	3	10	14	14	16–12	16–14
7-1/2		11	12	3	15	12	14	16–12	16–14
10	FR5	14	16	3	20	10	12	16–8	16–8
15		21	23	3	30	10	10	16–8	16–8
20		27	31	3	35	8	8	16–8	16–8
25	FR6	34	38	3	50	6	8	14–1/0	10–2
30		40	46	3	60	4	8	14–1/0	10–2
40		52	61	3	80	2	6	14–1/0	10–2
50	FR7	65	72	3	100	2	6	14–1/0	10–2/0
60		77	87	3	110	1	6	14–1/0	10–2/0
75		96	105	3	125	1/0	4	14–1/0	10–2/0
100	FR8	124	140	3	175	3/0	2	4–3/0	4–3/0
125		156	170	3	200	4/0	I/0	3/0–350 kcmil	4–3/0
150		180	205	3	250	300	2/0	3/0–350 kcmil	4–3/0

Note

① UL recognized type JJS is preferred but RK is acceptable.

40°C Cable and Fuse Sizes—480V Ratings, continued

I_L hp	Frame Size	NEC I (A)	I (A)	Fuse ① Quantity	Fuse (A)	Wire Size AWG Power	Ground	Terminal Size Power	Ground
200	FR9	240	261	3	350	2 x 4/0	3/0	2 x 3/0–350 kcmil	4–000
250		302	300	3	400	2 x 250	300	2 x 3/0–350 kcmil	4–000
300	FR10	361	385	3	450	2 x 250	300	600 kcmil	300 kcmil
350		414	460	3	500	2 x 300	300	600 kcmil	300 kcmil
400		477	520	3	600	2 x 400	350	600 kcmil	300 kcmil
500	FR11	590	590	6	350	2 x 500	500	Bus bar	Bus bar
550		NS	650	6	400	4 x 4/0	500	Bus bar	Bus bar
600		NS	730	6	450	4 x 250	600	Bus bar	Bus bar
650	FR12	NS	820	6	500	4 x 300	600	Bus bar	Bus bar
700		NS	920	6	500	4 x 300	600	Bus bar	Bus bar
800		NS	1030	6	600	4 x 350	—	Bus bar	Bus bar

40°C Cable and Fuse Sizes—575V Ratings

I_L hp	Frame Size	NEC I (A)	I (A)	Fuse ① Quantity	Fuse (A)	Wire Size AWG Power	Ground	Terminal Size Power	Ground
3	FR6	3.9	4.5	3	10	14	14	14–1/0	14–2
5		6.1	7.5	3	10	14	14	14–1/0	14–2
7-1/2		9	10	3	15	12	14	14–1/0	14–2
10		11	13.5	3	20	12	12	14–1/0	14–2
15		17	18	3	30	10	10	14–1/0	14–2
20		22	22	3	35	8	8	14–1/0	14–2
25		27	27	3	40	8	8	14–1/0	14–2
30		32	34	3	45	6	8	14–1/0	14–2
40	FR7	41	41	3	50	6	8	14–1/0	10–1/0
50		52	52	3	70	4	6	14–1/0	10–1/0
60	FR8	62	62	3	80	2	6	4–3/0	4–3/0
75		77	80	3	125	1/0	6	4–3/0	4–3/0
100		99	100	3	150	2/0	6	4–3/0	4–3/0
125	FR9	125	125	3	175	3/0	6	4–3/0	4–3/0
150		144	144	3	250	300	1/0	3/0–350 kcmil	4–3/0
200		192	208	3	275	350	2/0	3/0–350 kcmil	4–3/0
250	FR10	242	261	3	350	2 x 4/0	3/0	600 kcmil	300 kcmil
300		289	325	3	400	2 x 250	300	600 kcmil	300 kcmil
400		382	385	3	450	2 x 300	300	600 kcmil	300 kcmil
450	FR11	412	460	6	250	2 x 300	300	Bus Bar	Bus bar
500		472	502	6	300	2 x 350	350	Bus Bar	Bus bar
550		NS	590	6	350	2 x 500	500	Bus Bar	Bus bar
600	FR12	NS	650	6	400	4 x 4/0	500	Bus Bar	Bus bar
700		NS	750	6	450	4 x 250	600	Bus Bar	Bus bar
800		NS	820	6	500	4 x 300	600	Bus Bar	Bus bar

Note

① UL recognized type JJS is preferred but RK is acceptable.

Cable and Bus Bar Sizes, SPX FR10–FR12—480V Ratings

I_H hp	Frame Size	Current	Internal Power Cables ① Cu (per Phase)	External Power Bus Bars Cu (in Inches)	Qty.
250	FR10	300	2 x 2/0	1.18 x 0.25	3
300		385	2 x 3/0	1.57 x 0.25	3
350		460	2 x 3/0	1.57 x 0.25	3
400	FR11	520	2 x 2 x 2/0	1.18 x 0.25	6
500		590	2 x 2 x 2/0	1.18 x 0.25	6
—		650	2 x 2 x 2/0	1.18 x 0.25	6
600	FR12	750	2 x 2 x 3/0	1.57 x 0.25	6
—		820	2 x 2 x 3/0	1.57 x 0.25	6
700		920	2 x 2 x 3/0	1.57 x 0.25	6

Cable and Bus Bar Sizes, SPX FR13–FR14—480V Ratings

			Internal Power Connections			Supply Bus Bars	
I_H hp	Frame Size	Current	Bus Bar Size NFE–INU (in Inches)	Bus Bar Size/ Phase ② (Choke—NFE) (in Inches)	Cable Size/ Phase (Choke—NFE)	Cu (in Inches)	Qty.
800	FR13	1030	2.36 x 0.39	1.57 x 0.25	2 x 300 kcmil	1.57 x 0.25	6
900		1150	3.15 x 0.39	1.57 x 0.25	2 x 250 kcmil	1.57 x 0.25	12
1000		1300	3.15 x 0.39	1.57 x 0.25	2 x 250 kcmil	1.57 x 0.25	12
1200	FR14	1600	2.36 x 0.39	1.57 x 0.25	2 x 250 kcmil	1.57 x 0.25	12
1600		1940	2.36 x 0.39	1.57 x 0.25	2 x 300 kcmil	1.57 x 0.25	12

Notes

① 90°C rating recommended.

② Rigid copper connection.

Cable and Bus Bar Sizes, SPX FR10–FR12—575V Ratings

I_H hp	Frame Size	Current	Internal Power Cables ① Cu (per Phase)	External Power Bus Bars Cu (in Inches)	Qty.
200	FR10	208	2 x 2/0	1.18 x 0.25	3
250		261	2 x 2/0	1.18 x 0.25	3
300		325	2 x 2/0	1.18 x 0.25	3
400	FR11	385	2 x 3/0	1.57 x 0.25	3
450		460	2 x 3/0	1.57 x 0.25	3
500		502	2 x 2 x 2/0	1.18 x 0.25	6
—	FR12	590	2 x 2 x 2/0	1.18 x 0.25	6
600		650	2 x 2 x 2/0	1.18 x 0.25	6
700		750	2 x 2 x 2/0	1.18 x 0.25	6

Cable and Bus Bar Sizes, SPX FR13–FR14—575V Ratings

			Internal Power Connections			Supply Bus Bars	
I_H hp	Frame Size	Current	Bus Bar Size NFE–INU (in Inches)	Bus Bar Size/ Phase ② (Choke—NFE) (in Inches)	Cable Size/ Phase (Choke—NFE)	Cu (in Inches)	Qty.
800	FR13	820	2.36 x 0.39	1.57 x 0.25	2 x 300 kcmil	1.18 x 0.25	6
900		920	2.36 x 0.39	1.57 x 0.25	2 x 250 kcmil	1.18 x 0.25	6
1000		1030	2.36 x 0.39	1.57 x 0.25	2 x 300 kcmil	1.18 x 0.25	6
1350	FR14	1300	3.15 x 0.39	1.57 x 0.25	2 x 250 kcmil	1.18 x 0.25	12
1500		1500	2.36 x 0.39	1.57 x 0.25	2 x 250 kcmil	1.18 x 0.25	12
2000		1900	2.36 x 0.39	1.57 x 0.25	2 x 300 kcmil	1.18 x 0.25	12

Notes

① 90°C rating recommended.

② Rigid copper connection.

UL Compatible Cable Selection and Installation with Breaker

Use only copper wire with temperature rating of at least 75°C.

Cable and Breaker ① Sizes—230V Ratings

I_H hp	Frame Size	FLA	Breaker Current	Wire Size ② AWG Power	Ground	Terminal Size Power	Ground
1	FR4	4.8	15	14	14	12–16	14–16
1-1/2		6.6	15	14	14	12–16	14–16
2		7.8	15	14	14	12–16	14–16
3		11	15	12	12	12–16	14–16
5	FR5	17.5	20	10	10	8–16	8–16
7-1/2		25	30	8	8	8–16	8–16
10	FR6	31	40	8	8	1/0–14	2–14
15		48	60	4	6	1/0–14	2–14
20	FR7	61	80	2	6	1/0–14	2/0–10
25		72	100	2	6	1/0–14	2/0–10
30		87	100	1/0	4	1/0–14	2/0–10

Cable and Breaker ① Sizes—480V Ratings

I_H hp	Frame Size	FLA	Breaker Current	Wire Size ② AWG Power	Ground	Terminal Size Power	Ground
1-1/2	FR4	3.3	15	14	14	12–16	14–16
2		4.3	15	14	14	12–16	14–16
3		5.6	15	14	14	12–16	14–16
5		7.6	15	14	14	12–16	14–16
7-1/2	FR5	12	20	12	12	8–16	8–16
10		16	30	10	10	8–16	8–16
15		23	30	8	8	8–16	8–16
20	FR6	31	40	8	8	1/0–14	2–14
25		38	50	6	8	1/0–14	2–14
30		46	60	4	6	1/0–14	2–14
40	FR7	61	80	2	6	1/0–14	2/0–10
50		72	100	2	6	1/0–14	2/0–10
60		87	100	1/0	4	1/0–14	2/0–10
75	FR8	105	125	2/0	2	3/0–4	3/0–4
100		140	150	4/0	1/0	350 kcmil–3/0	3/0–4
125		170	200	300	2/0	350 kcmil–3/0	3/0–4
150	FR9	205	250	350	3/0	350 kcmil–2 x 3/0	3/0–4
200		261	300	2 x 250	3/0	350 kcmil–2 x 3/0	3/0–4
250	FR10	300	400	2 x 250	300 kcmil	600 kcmil	600 kcmil
300		385	500	2 x 300	300 kcmil	600 kcmil	600 kcmil
350		460	600	2 x 400	300 kcmil	600 kcmil	600 kcmil

Notes

① A UL listed breaker must be used.

② Based on a maximum environment of 104°F (40°C).

Cable and Breaker ① Sizes—480V Ratings, continued

I_H hp	Frame Size	FLA	Breaker Current	Wire Size ② AWG Power	Ground	Terminal Size Power	Ground
400	FR11	520	700	2 x 500	500	Bus bar	Bus bar
500		590	800	4 x 4/0	500	Bus bar	Bus bar
550		650	900	4 x 250	600	Bus bar	Bus bar
600	FR12	750	1000	4 x 300	600	Bus bar	Bus bar
650		820	1000	4 x 300	600	Bus bar	Bus bar
700		920	1200	4 x 400	—	Bus bar	Bus bar

Cable and Breaker ① Sizes—575V Ratings

I_H hp	Frame Size	FLA	Breaker Current	Wire Size ② AWG Power	Ground	Terminal Size Power	Ground
2	FR6	3.3	15	14	14	1/0–14	2–14
3		4.5	15	14	14	1/0–14	2–14
5		7.5	15	14	14	1/0–14	2–14
7-1/2		10	20	12	14	1/0–14	2–14
10		13.5	30	10	12	1/0–14	2–14
15		18	30	10	10	1/0–14	2–14
20		22	40	8	8	1/0–14	2–14
25		27	40	8	8	1/0–14	2–14
30	FR7	34	50	6	8	1/0–14	1/0–10
40		41	60	4	6	1/0–14	1/0–10
50	FR8	52	100	2	6	3/0–4	3/0–4
60		62	100	1	6	3/0–4	3/0–4
75		80	125	1/0	6	3/0–4	3/0–4
100		100	150	3/0	6	3/0–4	3/0–4
125	FR9	125	200	4/0	2	350 kcmil–2x3/0	3/0–4
150		144	250	350	1/0	350 kcmil–2x3/0	3/0–4
200	FR10	208	300	2 x 250	300 kcmil	600 kcmil	600 kcmil
250		261	400	2 x 300	300 kcmil	600 kcmil	600 kcmil
300		325	500	2 x 350	300 kcmil	600 kcmil	600 kcmil
400	FR11	385	500	2 x 300	300	Bus bar	Bus bar
450		460	600	2 x 350	350	Bus bar	Bus bar
500		502	700	2 x 500	500	Bus bar	Bus bar
550	FR12	590	800	4 x 4/0	500	Bus bar	Bus bar
600		650	900	4 x 250	600	Bus bar	Bus bar
700		750	1000	4 x 300	600	Bus bar	Bus bar

Notes

The current interrupting of the breaker, up to 100 kAIC, will determine the overall current rating of the combination.

① A UL listed breaker must be used.

② Based on a maximum environment of 104°F (40°C).

Power Connection Tightening Torque

Rating	Frame Size	Tightening Torque (in-lbs)	Tightening Torque (Nm)
230V, 3/4–3 hp	FR4	5	0.6
480V, 1–5 hp		5	0.6
230V, 5–7-1/2 hp	FR5	13	1.5
480V, 7-1/2–15 hp		13	1.5
230V, 10–15 hp	FR6	35	4
480V, 20–30 hp		35	4
575V, 2–25 hp		35	4
230V, 20–30 hp	FR7	85	10
480V, 40–60 hp		85	10
575V, 30–40 hp		85	10
480V, 75–125 hp	FR8	340/187 ①	40/22 ①
575V, 50–75 hp		340/187 ①	40/22 ①
480V, 150–200 hp	FR9	340/187 ①	40/22 ①
575V, 100–175 hp		340/187 ①	40/22 ①

Installation Instructions

1. Strip the motor and input power cables as shown in the figure below and the table on **Page 13**.

Input Power and Motor Cable Stripping and Wire Lengths

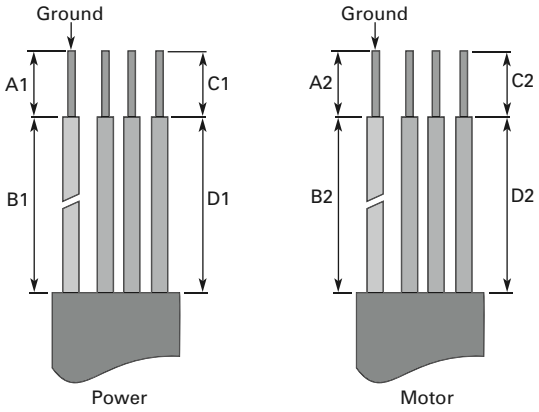

Note

① The isolation standoff of the bus bar will not withstand the listed tightening torque. Use a wrench to apply a counter torque when tightening.

Cable Stripping Lengths for Power and Motor Cables

Power and Motor Cable Stripping Lengths

Product			Power Wiring in Inches (mm)				Motor Wiring in Inches (mm)			
hp	Voltage	Frame Size	A1	B1	C1	D1	A2	B2	C2	D2
3/4–3	230V	FR4	0.59 (15)	1.38 (35)	0.39 (10)	0.79 (20)	0.28 (7)	1.97 (50)	0.28 (7)	1.38 (35)
1–5	480V									
5–7-1/2	230V	FR5	0.79 (20)	1.57 (40)	0.39 (10)	1.18 (30)	0.79 (20)	2.36 (60)	0.39 (10)	1.57 (40)
7-1/2–15	480V									
10–15	230V	FR6	0.79 (20)	3.54 (90)	0.59 (15)	2.36 (60)	0.79 (20)	3.54 (90)	0.59 (15)	2.36 (60)
20–30	480V									
2–25	575V									
20–30	230V	FR7	0.98 (25)	4.72 (120)	0.98 (25)	4.72 (120)	0.98 (25)	4.72 (120)	0.98 (25)	4.72 (120)
40–60	480V									
30–40	575V									
75–125	480V	FR8	1.10 (28)	9.45 (240)	1.10 (28)	9.45 (240)	1.10 (28)	9.45 (240)	1.10 (28)	9.45 (240)
50–75	575V									
150–200	480V	FR9	1.10 (28)	11.61 (295)	1.10 (28)	11.61 (295)	1.10 (28)	11.61 (295)	1.10 (28)	11.61 (295)
100–300	575V									

2. Locate the plastic bag containing the wiring plate.

Wiring Plate

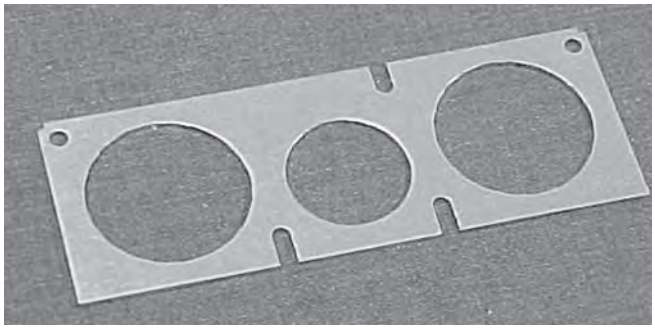

3. If conduit is being used, attach the wiring plate to the drive then conduit.
4. Pass the motor and input power wires/cables through the holes of the wiring plate.
5. Connect the input power and motor and control wires to their respective terminals according to the wiring diagrams in the section marked "Standard Wiring Diagrams and Terminal Locations" on **Page 14**.
6. If an optional external brake resistor is used, connect its cable to the appropriate terminals. See "Standard Wiring Diagrams and Terminal Locations" on **Page 14**.
7. If shielded cable is used, connect the shields of the input line power cable and the motor cable to the ground terminals of the SVX9000/SPX9000 drive, the motor, and the line power supply.

Ground Terminal Locations

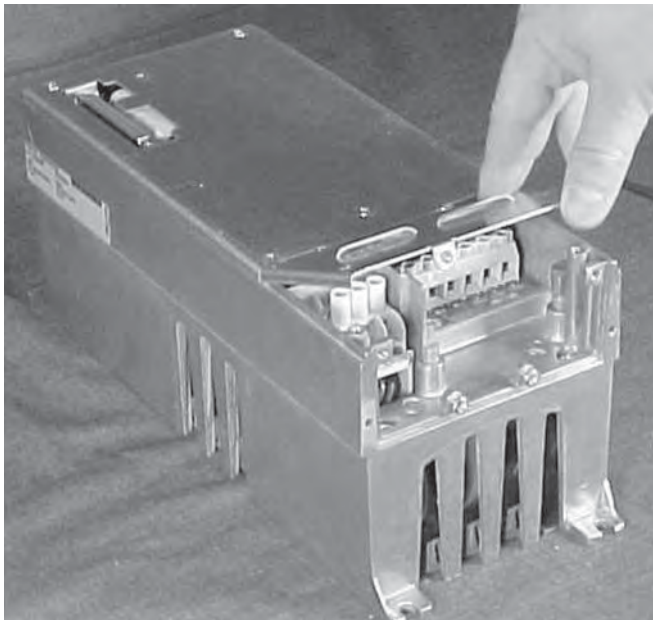

8. If shielded cable is not used, check the connection of the ground cable to the motor, the SVX9000/SPX9000 drive, and the input line power terminals marked with ⏚ .

9. Attach the wiring plate with the screws provided. Ensure that no wires are trapped between the frame and the wiring plate.
10. Insert the rubber grommets supplied into the wiring plate holes that have not been used, as illustrated in the figure to the right.

Cable Protection Plate

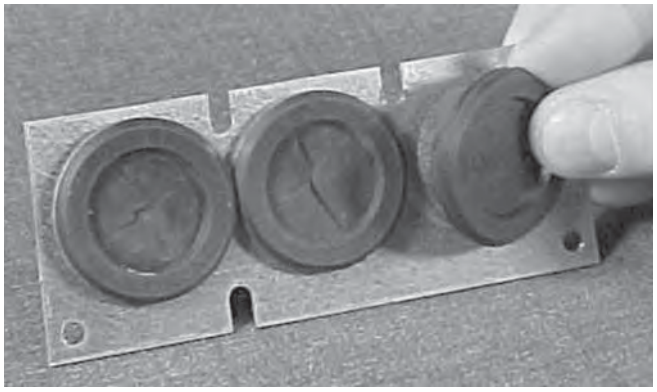

Standard Wiring Diagrams and Terminal Locations

The following wiring diagrams show the line and motor connections of the frequency converter.

Principle Wiring Diagram of SVX9000/SPX9000 Power Unit, FR4 to FR5 and FR6

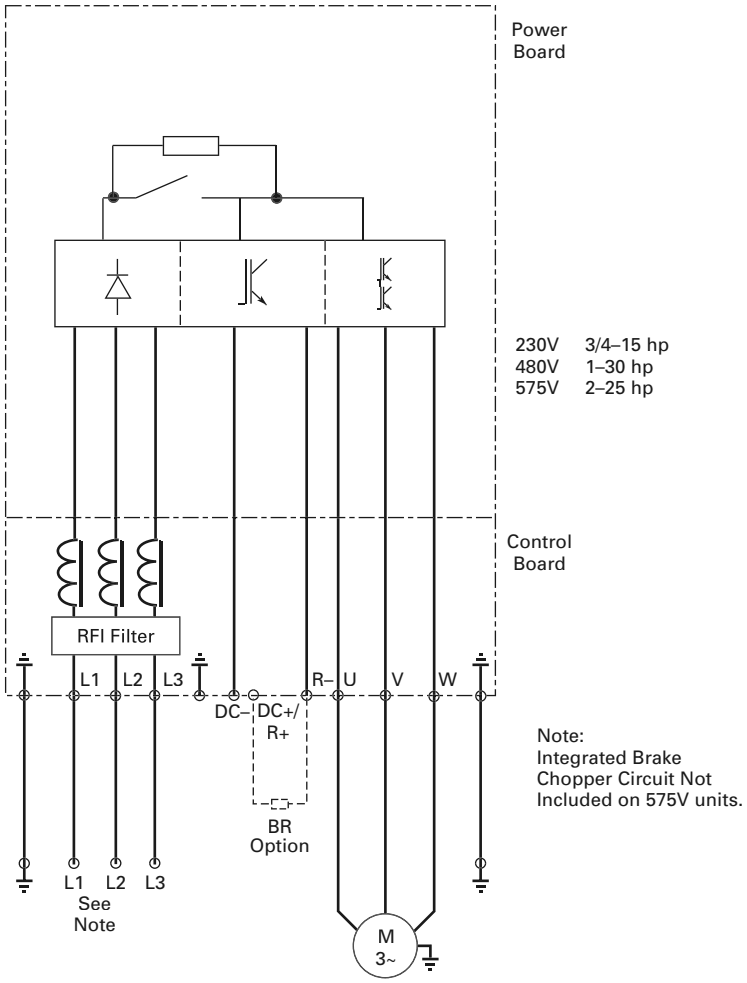

Note: When using a single-phase supply, for units rated for such, connect the input power to terminals L1 and L2. Consult Eaton for more information.

Principle Wiring Diagram of SVX9000/SPX9000 Power Unit, FR7 and FR8

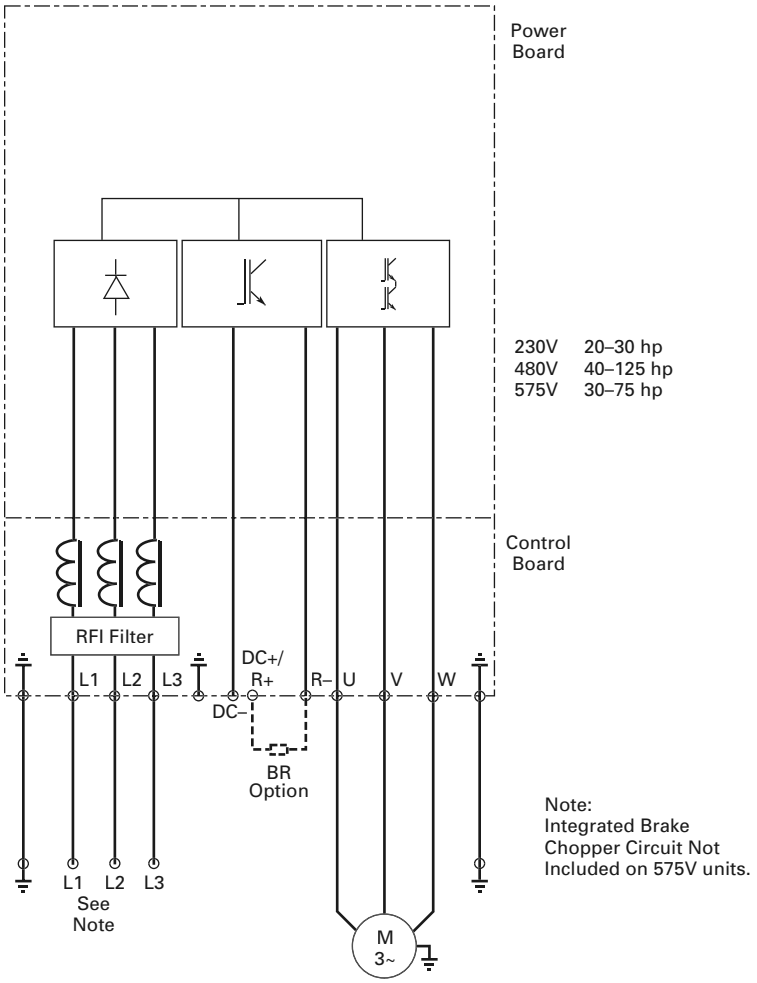

Note: When using a single-phase supply, for units rated for such, connect the input power to terminals L1 and L2. Consult Eaton for more information.

Principle Wiring Diagram of SVX9000/SPX9000 Power Unit, FR9 to FR10

The dotted lines refer to components present in FR9 but not in FR10.

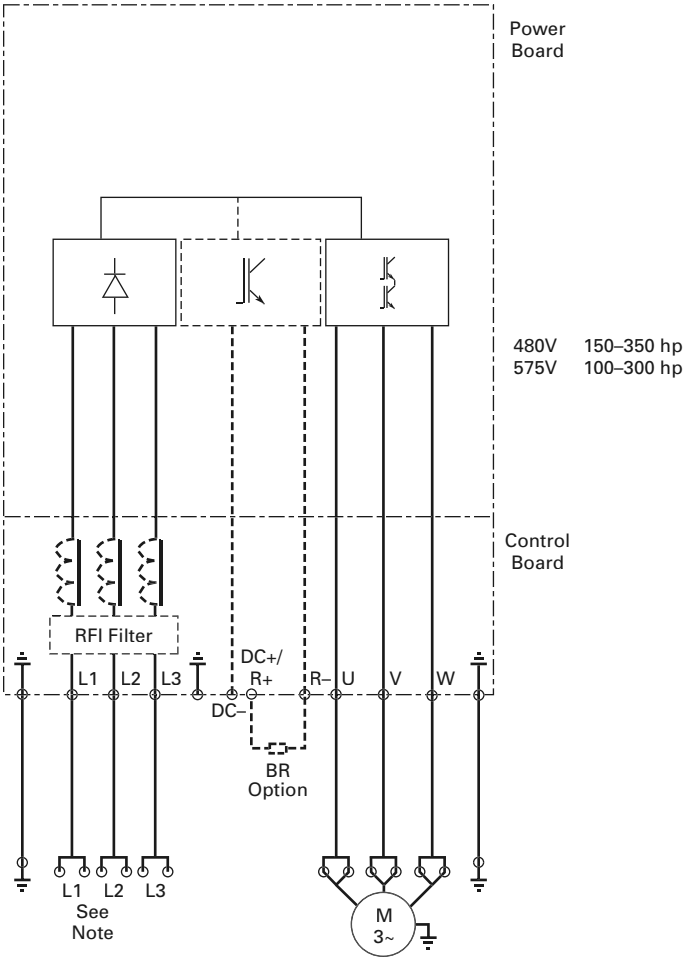

Power and Motor Wiring Terminals

Frame Size: FR4 (230V, 3/4–3 hp and 480V, 1–5 hp)

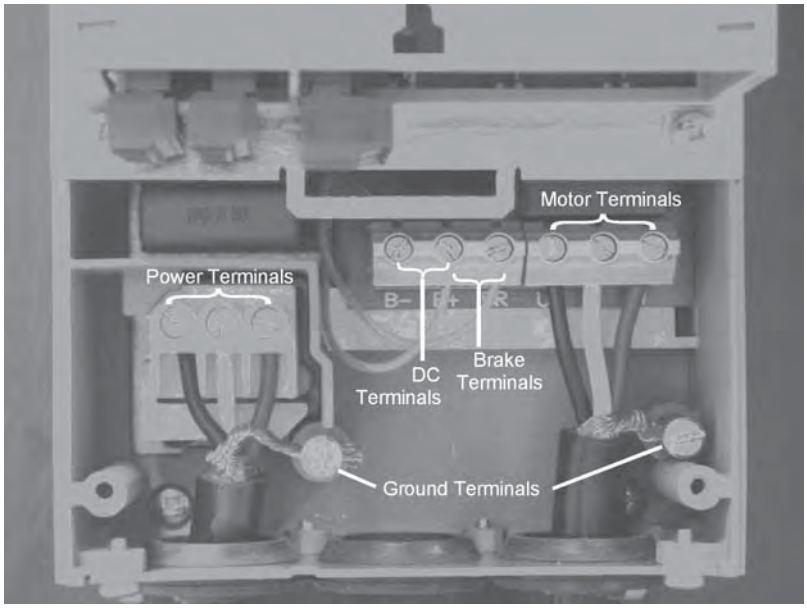

Frame Size: FR5 (230V, 5–7-1/2 hp and 480V, 7-1/2–15 hp)

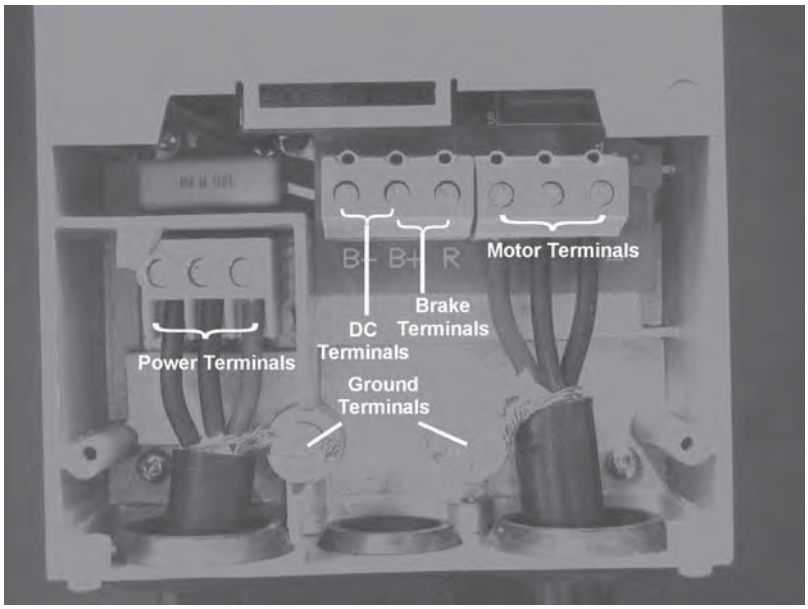

Frame Size: FR6 (230V, 10–15 hp, 480V, 20–30 hp and 575V, 2–25 hp)

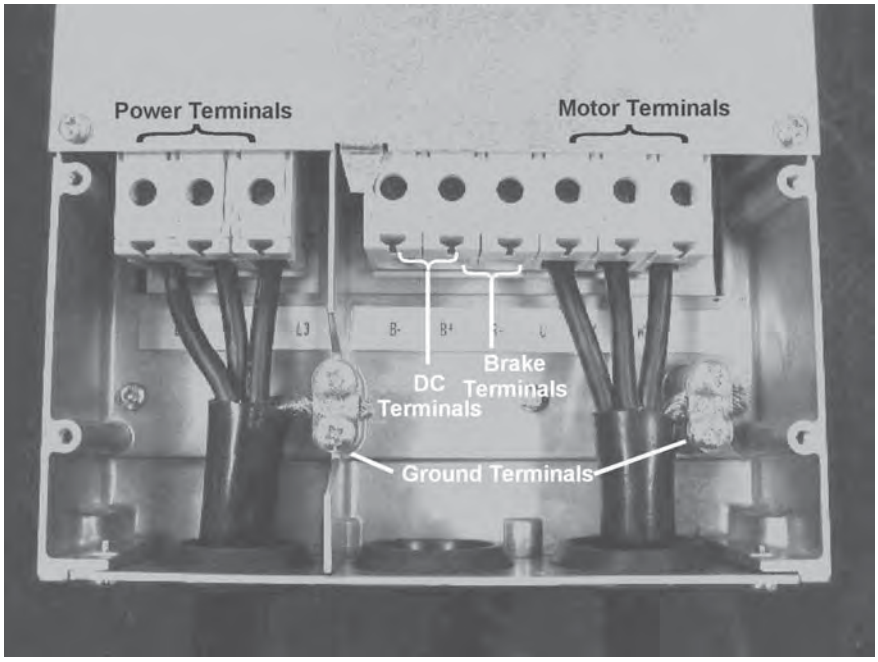

Frame Size: FR7 (230V, 20–30 hp, 480V, 40–60 hp and 575V, 30–40 hp)

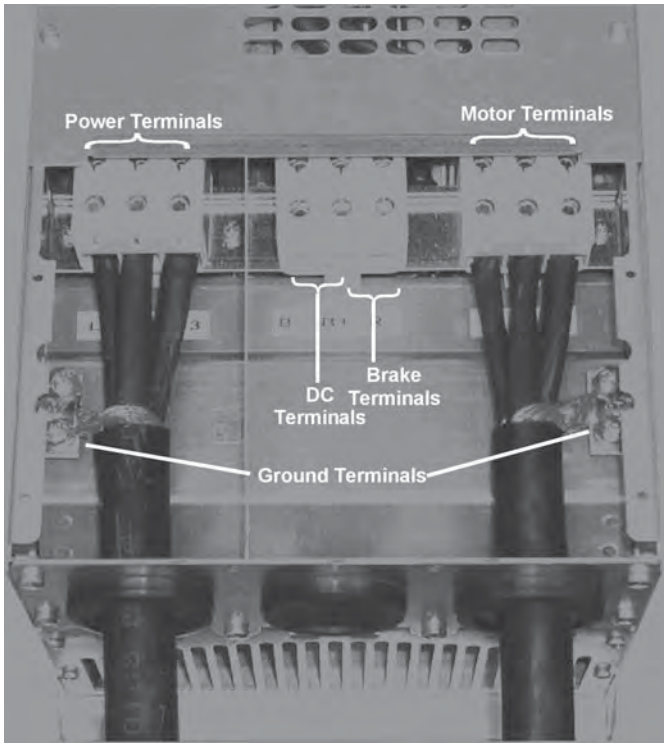

Frame Size: FR8 (480V, 75–125 hp and 575V, 50–75 hp)

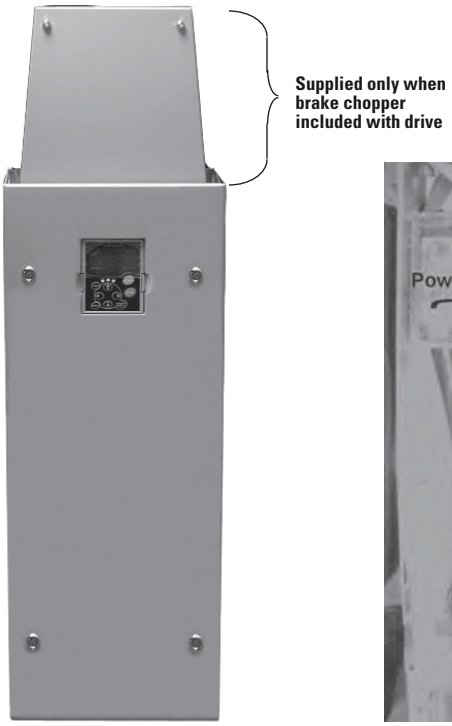

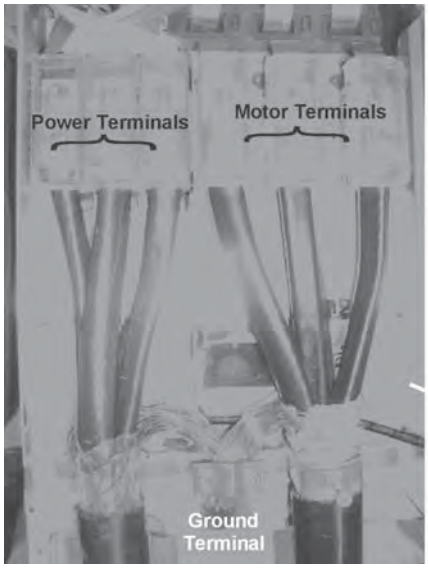

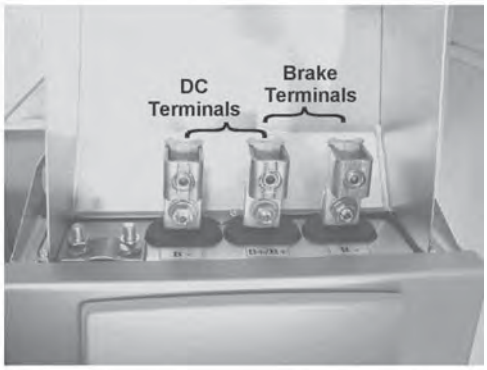

Frame Size: FR9 (480V, 150–200 hp and 575V, 100–175 hp)

Checking the Cable and Motor Insulation

1. Check the motor cable insulation as follows:

   Disconnect the motor cable from terminals U, V, and W of the SVX9000/SPX9000 and from the motor.

   Measure the insulation resistance of the motor cable between each phase conductor as well as between each phase conductor and the protective ground conductor.

   The insulation resistance must be >1M ohms.

2. Check the input power cable insulation as follows:

   Disconnect the input power cable from terminals L1, L2, and L3 of the SVX9000/SPX9000 and from the utility line feeder.

   Measure the insulation resistance of the input power cable between each phase conductor as well as between each phase conductor and the protective ground conductor.

   The insulation resistance must be >1M ohms.

3. Check the motor insulation as follows:

   Disconnect the motor cable from the motor and open any bridging connections in the motor connection box.

   Measure the insulation resistance of each motor winding. The measurement voltage must equal at least the motor nominal voltage but not exceed 1000V.

   The insulation resistance must be >1M ohms.

Control Wiring

General Information

The control unit of the SVX9000/SPX9000 consists of the control board and various option boards that plug into the five slot connectors (A to E) of the control board.

Galvanic isolation of the control terminals is provided as follows:

- The control connections are isolated from power, and the GND terminals are permanently connected to ground
- The digital inputs are galvanically isolated from the I/O ground
- The relay outputs are double-isolated from each other at 300 Vac

Option Board General Information

The SVX9000/SPX9000 series drives can accommodate a wide selection of *expander* and *adapter option boards* to customize the drive for your application needs.

The drive's control unit is designed to accept a total of five option boards. Option boards are available for normal analog and digital inputs and outputs, communication, and additional application-specific hardware.

The SVX9000/SPX9000 factory-installed standard option board configuration includes an A9 I/O board and an A2 relay output board, which are installed in slots A and B. For information on additional option boards, see the *9000X Series Drives Option Board User Manual*.

Option Board Slots

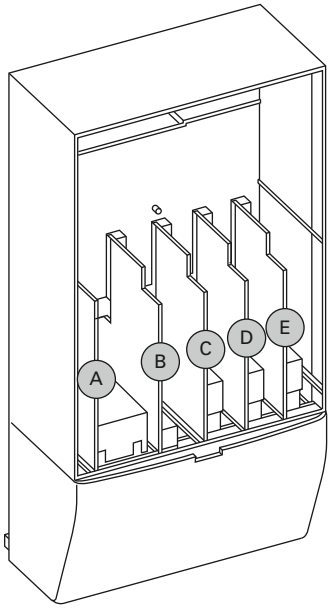

Control Wiring Guidelines

Wire the control terminals using the following guidelines:

- The control wires shall be at least AWG 20 (0.5 mm^2) shielded cables
- The maximum wire size is AWG 14 (2.5 mm^2) for the relay terminals and AWG 16 (1.5 mm^2) for all other terminals
- The tightening torques for the option board terminals are listed in the table below

Tightening Torques of Terminals

	Tightening Torque	
Terminal Screw	**in-lbs**	**Nm**
Relay and thermistor terminals (M3 screw)	4.5	0.5
Other terminals (M2.6 screw)	2.2	0.25

Control Wiring Instructions

Step	Example
1. Unlock the bottom cover by turning the locking screw 90 degrees counterclockwise.	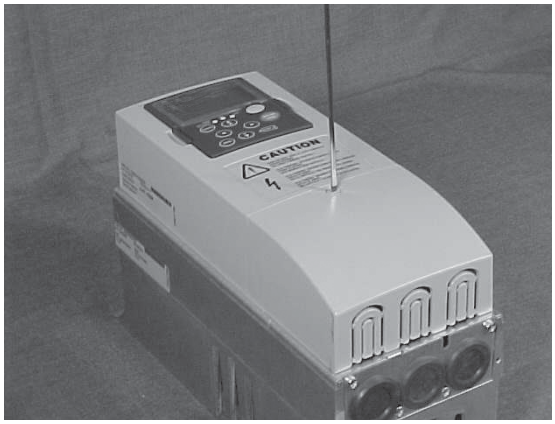
2. Remove the bottom cover by rotating the cover toward you on the base hinges, then lifting the cover away from the base.	
3. Wire the control terminals by following the details for the specific option boards shown on the following pages.	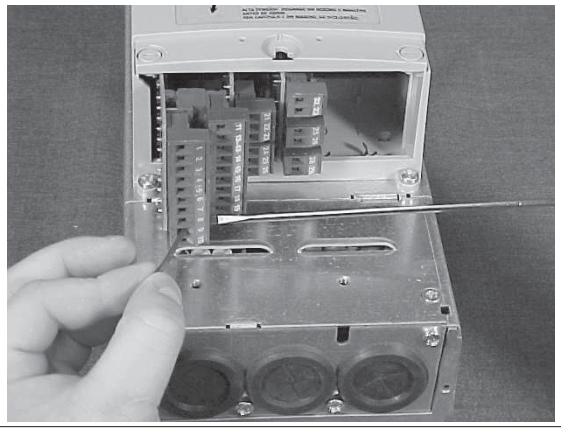

Note: For ease of access, the option board terminal blocks can be unplugged for wiring.

Control Wiring Details

Wiring Option Board A9

Option Board A9 Wiring Diagram

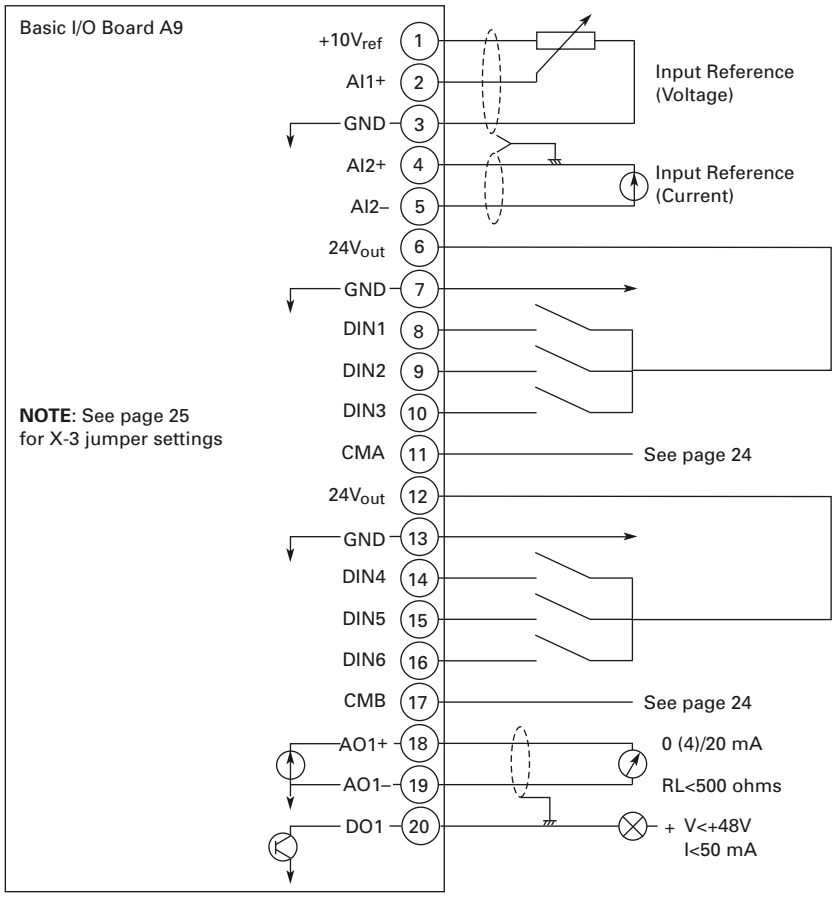

Option Board A9 Terminal Descriptions

Terminal		Signal	Description and Parameter Reference
1	$+10V_{ref}$	Reference voltage	Maximum current 10 mA
2	AI1+	Analog input, voltage	Default: 0 to +10V (R_i = 200k ohms) –10V to +10V (joystick control) 4 to 20 mA (R_i = 250 ohms) Select V or mA with jumper block X1 (see **Page 25**) Differential input if not connected to ground; allows ±20V differential mode voltage to GND
3	GND	Analog input common	
4	AI2+	Analog input	Default: 4 to 20 mA (R_i = 250 ohms) 0 to +10V (R_i = 200k ohms) –10V to +10V (joystick control) Select V or mA with jumper block X2 (see **Page 25**) Differential input if not connected to ground; allows ±20V differential mode voltage to GND
5	GND/AI2–	Analog input common	
6	$24V_{out}$	24V control voltage (bi-directional)	±15%, 250 mA (all boards total); 150 mA (max. current from single board); can be used as external power backup for the control (and fieldbus); galvanically connected to terminal #12
7	GND	I/O ground	Ground for reference and controls; galvanically connected to terminals #13, 19
8	DIA1	Digital input 1	R_i = min. 5k ohms
9	DIA2	Digital input 2	
10	DIA3	Digital input 3	
11	CMA	Digital input common A for DIN1, DIN2 and DIN3	Must be connected to GND or 24V of I/O terminal or to external 24V or GND. Selection with jumper block X3 (see **Page 25**)
12	$24V_{out}$	24V control voltage (bi-directional)	Same as terminal #6; galvanically connected to terminal #6
13	GND	I/O ground	Same as terminal #7; galvanically connected to terminals #7, and 19
14	DIB4	Digital input 4	R_i = min. 5k ohms
15	DIB5	Digital input 5	
16	DIB6	Digital input 6	
17	CMB	Digital input common B for DIN4, DIN5 and DIN6	Must be connected to GND or 24V of I/O terminal or to external 24V or GND. Select with jumper block X3 (see **Page 25**)
18	A01+	Analog signal (+output)	Output signal range: 0–20 mA default Current: 0(4)–20 mA, RL max 500 ohms or Voltage: 0 to 10V, RL >1k ohms Selection with jumper block X6 (see **Page 25**)
19	A01–	Analog output common	Maximum V_{in} = 48 Vdc; galvanically connected to terminals #7, 13
20	DO1	Digital output 1	Open collector, maximum current = 50 mA

Option Board A9 Jumper Location and Settings

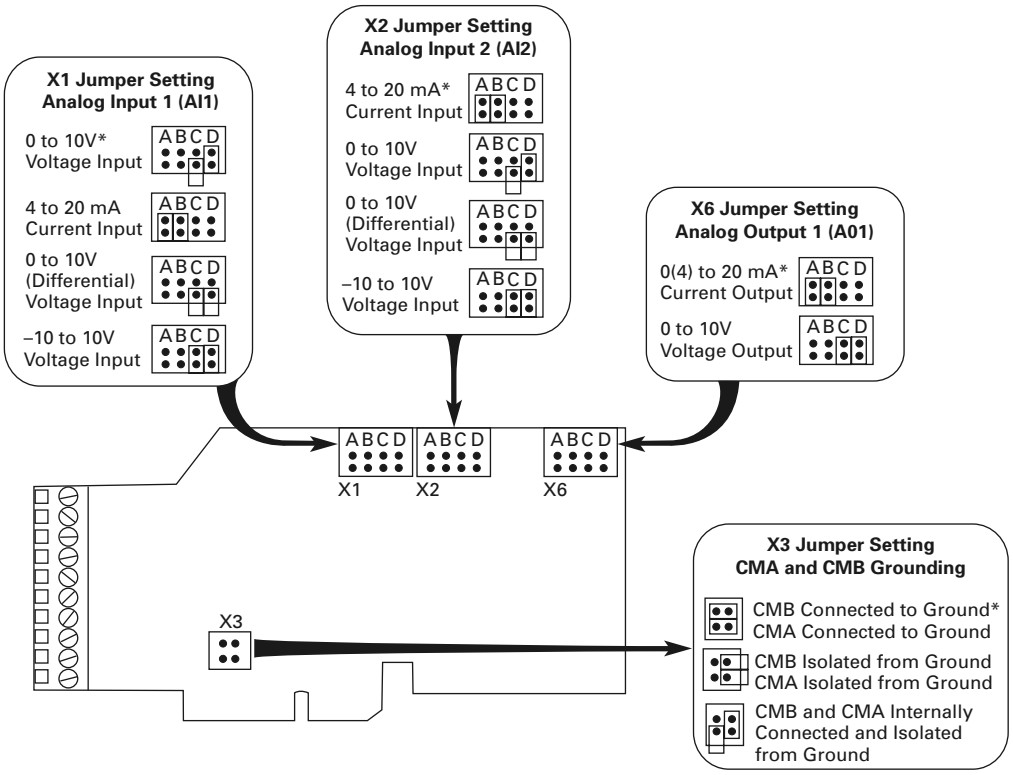

* Designates Default Jumper Settings

Wiring Option Board A2

Option Board A2 Wiring Diagram

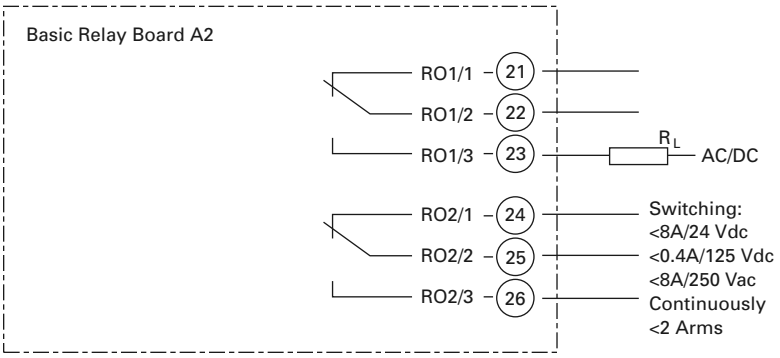

Option Board A2 Terminal Descriptions

Terminal		Signal	Technical Information
21	RO1/1	Normally closed (NC)	Switching capacity: 24 Vdc/8A 250 Vac/8A 125 Vdc/0.4A Min switching load: 5V/10 mA Continuous capacity: <2 Arms
22	RO1/2	Common	
23	RO1/3	Normally open (NO)	
24	RO2/1	Normally closed (NC)	Switching capacity: 24 Vdc/8A 250 Vac/8A 125 Vdc/0.4A Minimum switching load: 5V/10 mA Continuous capacity: <2 Arms
25	RO2/2	Common	
26	RO2/3	Normally open (NO)	

Option Board A2 Terminal Locations

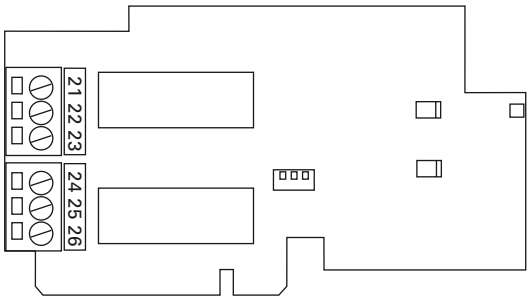

Inverting the Digital Input Signal

The active signal level depends on which potential the common inputs CMA and CMB (terminals 11 and 17) are connected to. The alternatives are either +24V or ground (0V). See figures below.

The 24V control voltage and the ground for the digital inputs and the common inputs (CMA, CMB) can be sourced from either the internal 24V supply or an external supply.

Positive Logic

Positive logic (+24V is the active signal) = the input is active when the switch is closed.

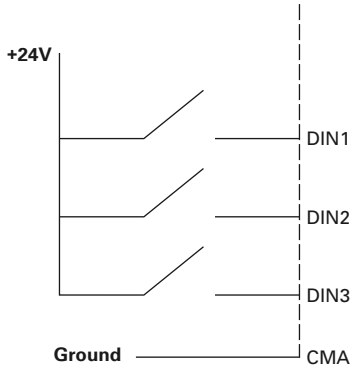

Negative Logic

Negative logic (0V is the active signal) = the input is active when the switch is closed.

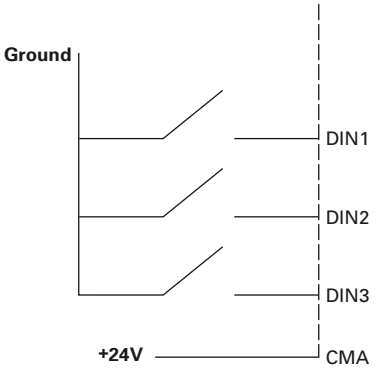

Menu Information

Keypad Operation

Keypad and Display

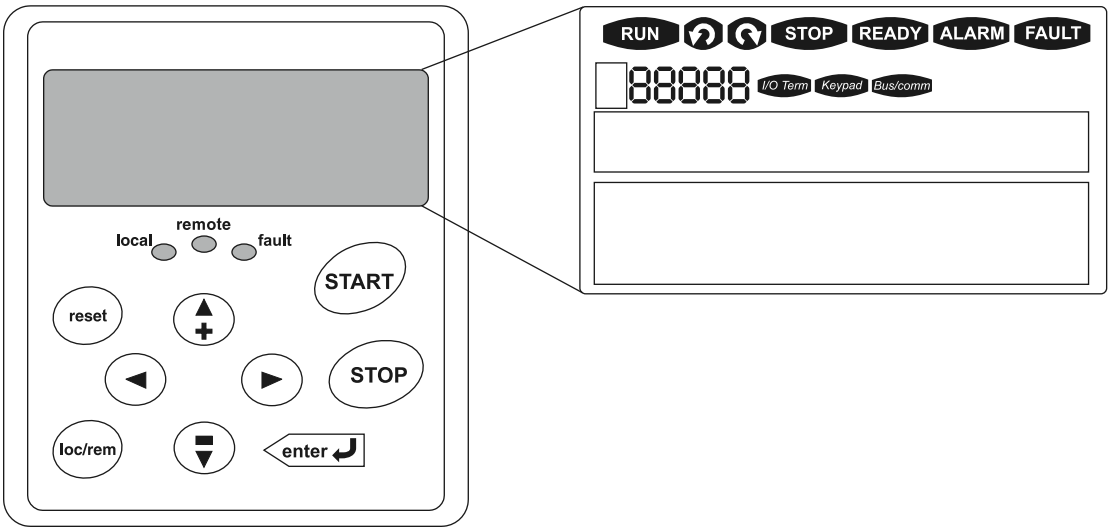

LCD Status Indicators

Indicator	Description
RUN	**Run** Indicates that the SVX9000/SPX9000 is running and controlling the load. Blinks when a stop command has been given but the SVX9000/SPX9000 is still ramping down.
	Counterclockwise Operation The output phase rotation is BAC, corresponding to counterclockwise rotation of most motors.
	Clockwise Operation The output phase rotation is ABC, corresponding to clockwise rotation of most motors.
STOP	**Stop** Indicates that the SVX9000/SPX9000 is stopped and not controlling the load.
READY	**Ready** Indicates that the SVX9000/SPX9000 is ready to be started.
ALARM	**Alarm** Indicates that there is one or more active drive alarm(s).
FAULT	**Fault** Indicates that there is one or more active drive fault(s).
I/O Term	**I/O Terminal** Indicates that the I/O terminals have been chosen for control.
Keypad	**Keypad** Indicates that the keypad has been chosen for control.
Bus/comm	**Bus/Communications** Indicates that the communications bus control has been chosen for control.

LED Status Indicators, continued

Indicator	Description
local	**Local—Steady Illumination** Indicates that the SVX9000/SPX9000 is ready to be started and operated from the local mode. **Local—Flashing** Indicates that the SVX9000/SPX9000 is ready for operating command to select local or remote operation.
remote	**Remote** Indicates that the SVX9000/SPX9000 is operating and controlling the load remotely.
fault	**Fault** Indicates that there is one or more active drive fault(s).

Navigation Buttons

Button	Description
START	**Start** This button operates as the START button for normal operation when the "Keypad" is selected as the active control.
enter ↵	**Enter** This button is used in the parameter edit mode to save the parameter setting and move to the next parameter … • to reset the Fault History if pressed while in the "Fault History" menu • to confirm the acceptance of a change • to change a virtual button status while in the "Button" menu • to confirm the start-up list at the end of the Startup Wizard • when the "Operate" menu is active, to exit the "Operate" submenu
STOP	**Stop** This button has two integrated operations. The button operates as STOP button during normal operation … • motor STOP from the keypad, which is always active unless disabled by the "StopButtonActive" parameter • used to reset the active faults
reset	**Reset** Resets the active faults.
loc/rem	**Local/Remote** Switches between LOCAL and REMOTE control for start, speed reference, and reverse functions. The control locations corresponding to local and remote can be selected within an application.
◄	**Left Arrow** • Navigation button, movement to left • In parameter edit mode, exits mode, backs up one step • Cancels edited parameter (exit from a parameter edit mode) • When in "Operate" menu will move backward through menu • At end of "Startup Wizard," repeats the "Startup Wizard" setup menu
►	**Right Arrow** • Navigation button, movement to right • Enter parameter group mode • Enter parameter mode from group mode • When in "Operate" menu will move forward through menu
▲ + ▼ −	**Up and Down Arrows** • Move either up or down a menu list to select the desired menu item • Editing a parameter/password, while the active digit/character is scrolled • Increase/decrease the reference value of the selected parameter • In the "Operate" menu, will cause the display of the current reference source and value and allow its change if the keypad is the active reference source. Used to set the password (if defined) when leaving the "Operate" menu • Scroll through the "Active Faults" menu when the SVX9000/SPX9000 is stopped

Menu Navigation

Navigation Tips

- To navigate within one level of a menu, use the up and down arrows
- To move deeper into the menu structure and back out, use the right and left arrows
- To edit a parameter, navigate to show that parameter's value, and press the right arrow button to enter the edit mode. In edit mode, the parameter value will flash
- When in edit mode, the parameter value can be changed by pressing the up or down arrow keys
- When in edit mode, pressing the right arrow a second time will allow you to edit the parameter value digit by digit
- To confirm the parameter change you must press the ENTER button. *The value will not change unless the ENTER button is pushed*
- Some parameters cannot be changed while the SVX9000/SPX9000 is running. The screen will display LOCKED if you attempt to edit these parameters while the drive is running. Stop the drive to edit these parameters. See the appropriate application manual for identification of these parameters specific to your chosen application

Main Menu

The data on the control keypad are arranged in menus and submenus. The first menu level consists of M1 to M8 and is called the Main Menu. The structure of these menus and their submenus is illustrated below. Some of the submenus will vary for each application choice.

Main Menu Navigation

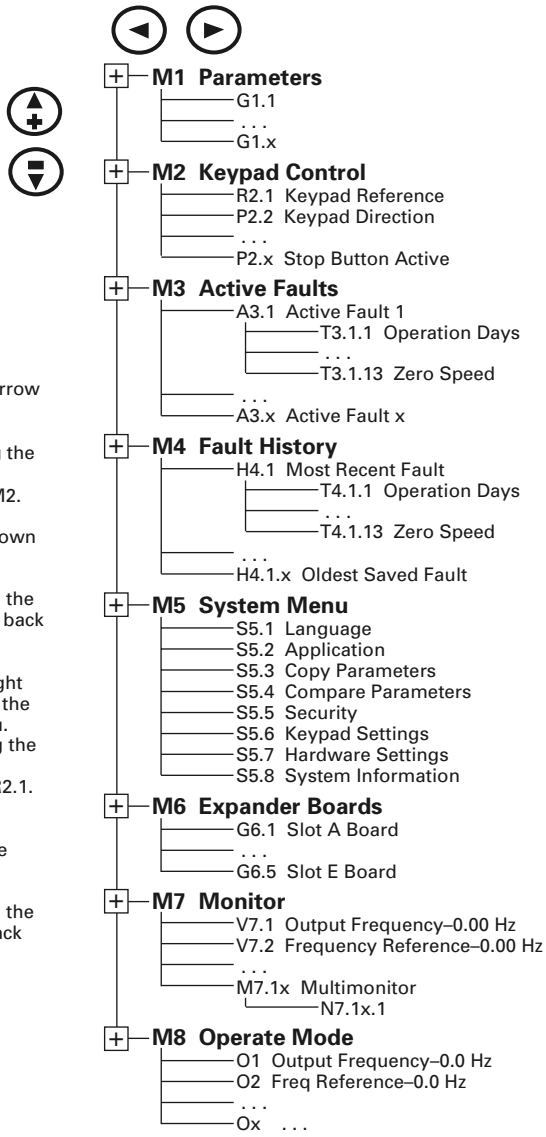

Menu Navigation:

Up Arrow — The up arrow advances to the next menu item.
For example, pressing the up arrow once will advance from M1 to M2.

Down Arrow — The down arrow backs up to the previous menu item.
For example, pressing the down arrow once will back up from M2 to M1.

Right Arrow — The right arrow will advance to the next level in the menu.
For example, pressing the right arrow once will advance from M2 to R2.1.

Left Arrow — The left arrow will back up one level in the menu structure.
For example, pressing the left arrow once will back up from R2.1 to M2.

Parameter Menu (M1)

The Parameter Menu is a single or multi-level menu dependent upon the application in use, arranged by the parameter group items. The figure below illustrates this for the standard application. Parameters and parameter groups are explained in further detail in the appropriate application manual.

Parameter Menu Structure Example

M1 Parameters Menu

- **G1.1 Basic Parameters**
  - P1.1.1 Minimum Frequency
  - P1.1.2 Maximum Frequency
  - . . .
  - P1.1.16 Preset Speed 1
- **G1.2 Input Signals**
  - P1.2.1 Start/Stop Logic
  - P1.2.2 DIN3 Function
  - . . .
  - P1.2.9 AI2 Signal Select
- **G1.3 Output Signals**
  - P1.3.1 A1out Signal
  - P1.3.2 A1out Content
  - . . .
  - P1.3.17 A2out Scale
- **G1.4 Drive Control**
  - P1.4.1 Ramp 1 Shape
  - P1.4.2 Ramp 2 Shape
  - . . .
  - P1.4.13 Flux Brake Current
- **G1.5 Skip Frequency**
  - P1.5.1 Skip F1 Low Limit
  - P1.5.2 Skip F1 High Limit
  - P1.5.3 PH Accel/Decel Ramp
- **G1.6 Motor Control**
  - P1.6.1 Motor Control Mode
  - P1.6.2 V/Hz Optimization
  - . . .
  - P1.6.13 Identification
- **G1.7 Protections**
  - P1.7.1 4mA Input Fault
  - P1.7.2 4mA Fault Frequency
  - . . .
  - P1.7.23 Slot Comm Fault Response
- **G1.8 Auto Restart**
  - P1.8.1 Wait Time
  - P1.8.2 Trial Time
  - . . .
  - P1.8.10 Underload Tries

Keypad Control Menu (M2)

In the Keypad Control Menu, you can set the frequency reference, choose the motor direction for keypad operation, and determine if the STOP button will be active at all times. See figure below.

M2 Keypad Control Menu

R2.1	Range: Min. Frequency—Max. Frequency Units: Hertz	
Keypad Reference	*KEYPAD REFERENCE* This displays and allows the operator to edit the keypad frequency reference. A change takes place immediately. This reference value will not influence the output frequency unless the keypad has been selected as the active control place.	
P2.2	Range: Forward, Reverse	Default: Forward
Keypad Direction	*KEYPAD DIRECTION* This allows the operator to change the rotation direction of the motor. This setting will not influence the rotation direction of the motor unless the keypad has been selected as the active control place.	
P2.3 ①	Range: Yes, No	Default: Yes
Stop Button Active	*STOPBUTTONACTIVE* By default, pushing the STOP button will **always** stop the motor regardless of the selected control place. If this parameter is set to **No**, the **STOP** button will stop the motor only **when the keypad has been selected as the active control place**.	

Note

① This parameter number varies for different applications.

Active Faults Menu (M3)

When a fault occurs, the SVX9000/SPX9000 stops. The sequence indication F1, the fault code, a short description of the fault, and the fault, type symbol will appear on the display. In addition, the indication FAULT or ALARM is displayed and, in case of a FAULT, the red LED on the keypad starts to blink. If several faults occur simultaneously, the sequence of active faults can be browsed with the Browser buttons. See figure below.

The active faults memory can store the maximum of 10 faults in the sequential order of appearance. The fault remains active until it is cleared with either the STOP or RESET buttons, or with a reset signal from the I/O terminal. Upon fault reset, the display will be cleared and will return to the same state it was before the fault trip.

Active Fault Display Example

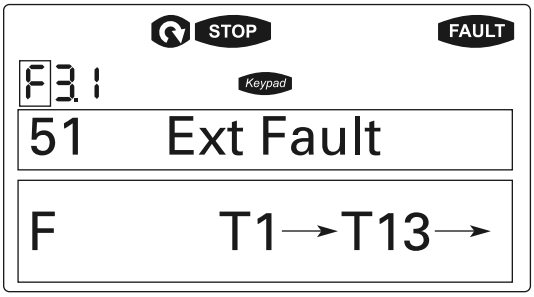

CAUTION

Remove any External Start signals or permissives before resetting the fault to prevent an unintentional restart of the SVX9000/SPX9000, which could result in personal injury or equipment damage.

Fault Type

Range: A, F, AR, FT

FAULT TYPE

There are four different types of faults. These faults and their definitions are given in the table below

Fault Types

Fault Type	Fault Name	Description
A	Alarm	This type of fault is a sign of an unusual operating condition. It does not cause the drive to stop, nor does it require any special actions. The "A fault" remains in the display for about 30 seconds.
F	Fault	An "F fault" is a kind of fault that makes the drive stop. Actions need to be taken in order to restart the drive.
AR	Auto-Restart Fault	If an "AR fault" occurs, the drive will also stop immediately. The fault is reset automatically and the drive tries to restart the motor. If the restart is not successful, a fault trip (FT) occurs.
FT	Fault Trip	If the drive is unable to restart the motor after an AR fault, an FT fault occurs. The effect of the "FT fault" is the same as that of the F fault—the drive is stopped.

Fault Code

Range: 1–54

Fault codes indicate the cause of the fault. A list of fault codes, their descriptions, and possible solutions can be found starting on **Page 81**.

Fault Time Data Record

Range: T.1–T.13

In this menu, important data recorded at the time the fault is available. This feature is intended to help the user or the service person to determine the cause of fault. The table below indicates the information that is recorded.

Fault Time Data

Fault Type	Units	Description
T.1 ①	D	Counted operation days (Fault 43: Additional code)
T.2 ①	hh:mm:ss (d)	Counted operation hours (Fault 43: Counted operation days)
T.3	Hz hh:mm:ss	Output frequency (Fault 43: Counted operation hours)
T.4	A	Motor current
T.5	V	Motor voltage
T.6	%	Motor power
T.7	%	Motor torque
T.8	V	DC bus voltage
T.9	°C	Unit temperature
T.10	—	Run status
T.11	—	Direction
T.12	—	Warnings
T.13	—	Zero speed

Notes

① Real-time record.
If real-time is set, T.1 and T.2 will appear as follows:

T.1 yyyy-mm-dd Counted operation days (Fault 43: Additional code)

T.2 hh:mm:ss.sss Counted operation hours (Fault 43: Counted operation days)

Fault History Menu (M4)

All faults are stored in the Fault History Menu, which can be viewed by using the Browser buttons. Additionally, the Fault time data record pages are accessible for each fault as in the Active Faults Menu described earlier. See figure below.

The SVX9000/SPX9000's memory can store a maximum of 30 faults, in the order of appearance. If there are 30 uncleared faults in the memory, the next occurring fault will erase the oldest fault from the memory.

Sample Fault History Display

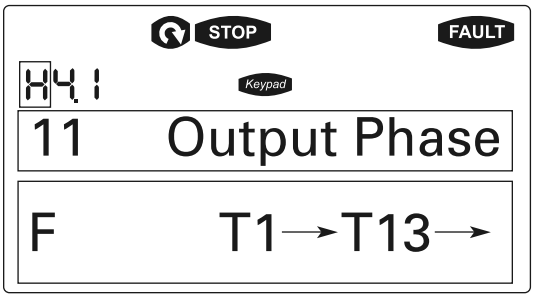

Note: Pressing the ENTER button for three seconds will clear the entire fault history.

System Menu (M5)

The controls associated with the general use of the drive, such as application selection, customized parameter sets, or information about the hardware and software are located in the System Menu. Password protection can be activated by parameter ***S5.5.1***.

Descriptions of the system menu parameters are illustrated in the figure below.

System Menu Structure

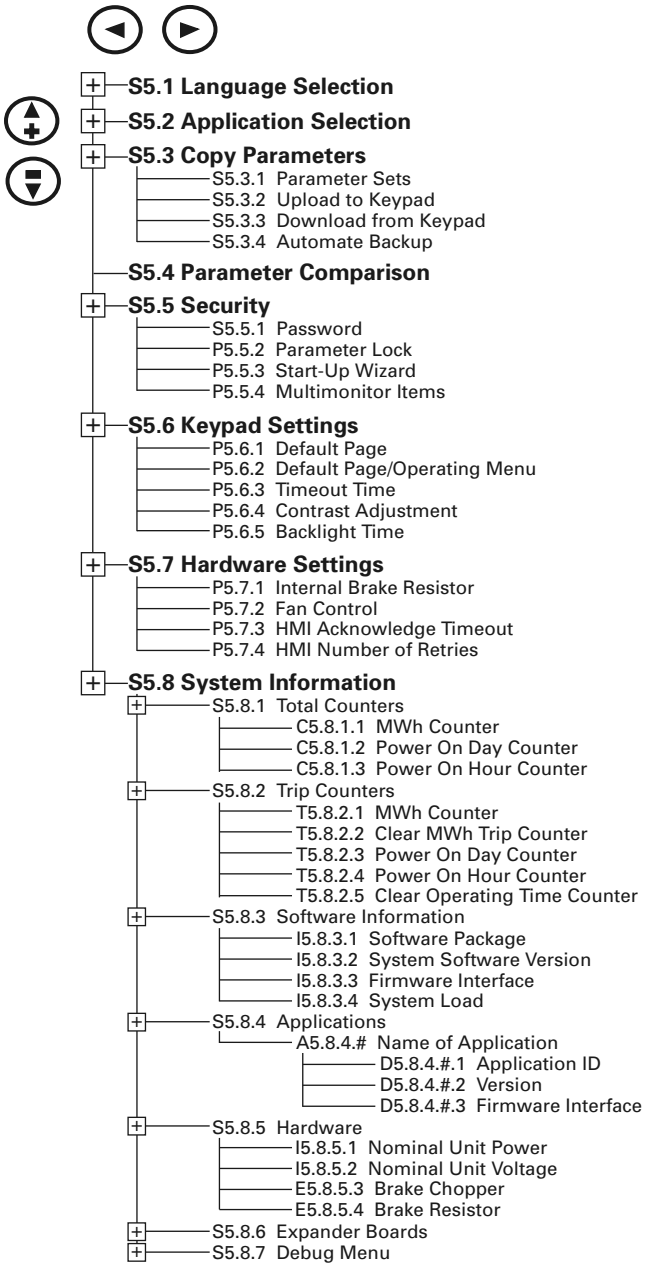

System Menu Parameters

S5.1	Range: English, Spanish, French, Portuguese	Default: English
Language Selection	LANGUAGE This parameter offers the ability to control the SVX9000/SPX9000 through the keypad in the language of your choice. Available languages are: English, Spanish, French, and Portuguese.	

S5.2		Default: Basic
Application Selection	APPLICATION This parameter sets the active application. When changing applications, you will be asked if you want the parameters of the new application to be uploaded to the keypad. If you wish to load the new application parameters, push the ENTER button. Pushing any other button saves the parameters of the previously used application in the keypad.	

System Menu Copy Parameter Options (S5.3)

The parameter copy function is used when the operator wants to copy one or all parameter groups from one drive to another. All the parameter groups are first uploaded to the keypad, the keypad is connected to another drive and the parameter groups are downloaded to it (or possibly back to the same drive).

Note: Before any parameters can be successfully copied from one drive to another, the drive must be stopped when the parameters are downloaded to it.

S5.3.1	
Parameter Sets	PARAMETER SETS This parameter allows you to reload the factory default parameter values, and to store and load two customized parameter sets.

S5.3.2	
Upload to Keypad	UP TO KEYPAD This function uploads all existing parameter groups to the keypad.

S5.3.3	Range: 0–3	Default: 0 (All parameters)
Download from Keypad	DOWN FROM KEYPAD This function downloads one or all parameter groups from the keypad to the drive. 0 All parameters 1 All, no motor 2 Application parameters	

S5.3.4	Range: Yes, No	Default: Yes
Automatic Backup	AUTO.BACKUP This parameter activates and deactivates the parameter backup function. When the parameter backup function is activated, the keypad makes a copy of the parameters and settings in the currently active application. When applications are changed, you will be asked if you wish the parameters of the **new** application to be uploaded to the keypad. For this to happen, push the ENTER button. If you wish to keep the copy of the parameters of the **previously used** application saved in the keypad, push any other button. **Note**: Parameters saved in the parameter settings of S5.3.1 will be deleted when applications are changed. If you want to transfer the parameters from one application to another, you have to upload them to the keypad first.	

System Menu Parameter Comparison Options (S5.4)

S5.4	
Parameter Comparison	PARAMETER COMPARISON With the Parameter Comparison function, you can compare the actual parameter values to the values of your customized parameter sets and those loaded to the control keypad. The actual parameter values are first compared to those of the customized parameter Set1. If no differences are detected, a "0" is displayed on the lowermost line of the keypad. If any of the parameter values differ from those of the Set1 parameters, the number of the deviations is displayed together with the symbol P (e.g. P1 ➔ P5 = five deviating values). By pressing the right arrow button once again, you will see both the actual value and the value it was compared to. In this display, the value on the description line (in the middle) is the default value, and the one on the value line (lowermost line) is the edited value. You can also edit the actual value by pushing the right arrow button. Actual values can also be compared to Set2, factory settings, and the keypad set values.

Security Menu Parameter Options (S5.5)

Note: The Security submenu is protected with a password.
Store the password in a safe place.

S5.5.1	Range: 0–65535	Default: 0
Password	PASSWORD The application selection can be protected against unauthorized changes with the password function. When the password function is enabled, the user will be prompted to enter a password before application changes, parameter value changes, or password changes. By default, the password function is not in use. If you want to activate the password, change the value of this parameter to any number between 1 and 65535. The password will be activated after the timeout time (***Timeout Time***) has expired. To deactivate the password, reset the parameter value to 0.	
P5.5.2	Range: ChangeEnable, ChangeDisabl	Default: ChangeEnable
Parameter Lock	PARAMETER LOCK This function allows the user to prohibit changes to the parameters. If the parameter lock is activated the text *LOCKED* will appear on the display if you try to edit a parameter value. **Note**: This function does not prevent unauthorized editing of parameter values.	
P5.5.3	Range: Yes, No	Default: No
Startup Wizard	STARTUP WIZARD The Startup Wizard facilitates commissioning the SVX9000/SPX9000. If selected active, the Startup Wizard prompts the operator for the language and application desired and then advances through the start-up parameter list. After completion it allows the user to repeat the Startup Wizard or return to the default page, the operate menu. The Startup Wizard is always active for the initial power up of the SVX9000/SPX9000.	
P5.5.4	Range: ChangeEnable, ChangeDisabl	Default: ChangeEnable
Multimonitor Items	MULTIMON.ITEMS The keypad display can display three actual monitored values at the same time. This parameter determines if the operator is allowed to replace the values being monitored with other values.	

Keypad Settings (S5.6)

There are five parameters (***Default Page*** to ***Backlight Time***) associated with the keypad operation:

P5.6.1		Default: 0
Default Page	DEFAULT PAGE This parameter sets the view to which the display automatically moves as the ***Timeout Time*** expires or when the keypad power is switched on. If the default page value is 0, this function is not activated, that is, the last displayed page remains on the keypad display.	
P5.6.2		
Default Page in the Operating Menu	DEFAULT PAGE/OM Here you can set the location in the operating menu to which the display automatically moves as the set ***Timeout Time*** expires, or when the keypad power is switched on. See setting of ***Default Page*** parameter above.	
P5.6.3	Range: 0–65,535	Default: 30
Timeout Time	Units: Seconds	
	TIMEOUT TIME The ***Timeout Time*** setting defines the time after which the keypad display returns to the ***Default Page***. **Note**: If the ***Default Page*** value is 0, the ***Timeout Time*** setting has no effect.	
P5.6.4		
Contrast Adjustment	CONTRAST ADJUSTMENT If the display is not clear, you can adjust the keypad contrast with this parameter.	
P5.6.5	Range: 1–65,535 or Forever	Default: 10
Backlight Time	Units: Minutes	
	BACKLIGHT TIME This parameter determines how long the backlight stays on before going out. You can select any time between 1 and 65,535 minutes or "Forever".	

Hardware Settings (S5.7)

The Hardware Settings submenu (S5.7) provides parameters for setting information on Internal brake resistor connection, Fan control, Keypad acknowledge timeout, and Keypad retries.

P5.7.1

Internal Brake Resistor Connection

Range: Connected–Not Connected | Default: Connected

INTERNBRAKERES

With this function, you tell the SVX9000/SPX9000 whether the internal brake resistor is connected or not.

If your drive has an internal brake resistor, the default value of this parameter is "Connected". However, if it is necessary to increase braking capacity by installing an external brake resistor, or if the internal brake resistor is disconnected, it is advisable to change the value of this function to "Not Connected" in order to avoid unnecessary fault trips.

Note: The brake resistor is available as an option for all drives. It can be installed internally in frame sizes FR4 to FR6.

5.7.2

Fan Control

Range: Continuous, Temperature, First Start, and Calc Temp | Default: Continuous

FAN CONTROL

This function allows you to control the SVX9000/SPX9000's cooling fan. You can set the fan to run:

1 Continuous—fan runs continuously.

2 Temperature—based on the temperature of the unit. The fan is switched on automatically when the heatsink temperature reaches 60°C. The fan receives a stop command when the heatsink temperature falls to 55°C. The fan runs for about a minute after receiving the stop command or switching on the power, as well as after changing the value from "Continuous" to "Temperature".

3 First Start—after power up the fan is stopped until the run command is given and then fan runs continuously. This is mainly made for common DC bus systems to prevent cooling fans to load charging resistors on power up moment.

4 Calc Temp—starting of cooling fan is based on calculated IGBT-temperature. When IGBT temperature = 40°C, fan starts and when temperature falls down to 30°C, fan stops.

Note: The fan runs continuously, regardless of this setting, when the SVX9000/SPX9000 is in RUN state.

P5.7.3

Keypad Acknowledge Timeout

Range: 200–5,000 | Default: 200

Units: ms

KEYPAD ACK TIMEOUT

This function allows the user to change the timeout of the keypad acknowledgement time.

Note: If the SVX9000/SPX9000 has been connected to a PC with a serial cable, the default values of ***Keypad Acknowledge Timeout*** and ***Number of Retries to Receive Keypad Acknowledgement*** must not be changed.

If the SVX9000/SPX9000 has been connected to a PC via a modem and there is delay in transferring messages, the value of ***Keypad Acknowledge Timeout*** must be set according to the delay as follows:

Example:

- Transfer delay between the SVX9000/SPX9000 and the PC is found to be 600 ms
- The value of Keypad Acknowledge Timeout is set to 1200 ms (2 x 600, sending delay + receiving delay)
- The corresponding setting is then entered in the [Misc] section of the file 9000XDrive.ini:
    - Retries = 5
    - AckTimeOut = 1200
    - TimeOut = 5000

It must also be considered that intervals shorter than the ***Keypad Acknowledge Timeout*** time cannot be used in SVX9000/SPX9000 drive monitoring.

P5.7.4

Number of Retries to Receive Keypad Acknowledge-ment

Range: 1–10 | Default: 5

KEYPAD RETRY

With this parameter, you can set the number of times the drive will try to receive an acknowledgement when it has not been received within the acknowledgement time (***Keypad Acknowledge Timeout***) or if the received acknowledgement is faulty.

System Information (S5.8)

This section contains hardware and software information as well as operation information.

S5.8.1

Total Counters

TOTAL COUNTERS

In the ***Total Counters*** page, you will find information related to the SVX9000/SPX9000 operating times, that is, the total numbers of MWh, operating days and operating hours. See table below.

Unlike the counters for the ***Trip Counters***, these counters cannot be reset.

Note: The Power On time counters, days and hours, operate whenever power is applied to the SVX9000/SPX9000.

Total Counters

Number	Name	Description
C5.8.1.1	MWh counter	Megawatt hours total operation time counter
C5.8.1.2	Power On day counter	Number of days the SVX9000/SPX9000 has been supplied with power
C5.8.1.3	Power On hour counter	Number of hours the SVX9000/SPX9000 has been supplied with power

S5.8.2

Trip Counters

TRIP COUNTERS

The ***Trip Counters*** are counters whose values can be reset to zero. The resettable counters are shown in the table below.

Trip Counters

Number	Name	Description
T5.8.2.1	MWh counter	Megawatts hours since last reset
P5.8.2.2	Clear MWh counter	Resets megawatts hours counter
T5.8.2.3	Power On day counter	Number of days the SVX9000/SPX9000 has been run since the last reset
T5.8.2.4	Power On hour counter	Number of hours the SVX9000/SPX9000 has been run since the last reset
P5.8.2.5	Clr Optime cntr	Resets the operating day and hour counters

Note: The ***Trip Counters*** operate only when the motor is running.

S5.8.3

Software Information

SOFTWARE

The Software information page includes information on the following software related topics:

Software Information

Number	Name	Description
I5.8.3.1	Software package	SVX00031V003
I5.8.3.2	System software version	11.53.6536
I5.8.3.3	Firmware interface	4.37
I5.8.3.4	System load	G9.1

S5.8.4 Application Information

APPLICATIONS

The Application information page includes information on not only the application currently in use but also on all other applications loaded into the SVX9000/SPX9000. The information available is shown in the table below. Note that the "x" in the table refers to the sequential number of the application in the list.

Application Information

Name	Content
A4.8.4.x	Application name
D4.8.4.x.1	Application ID
D4.8.4.x.2	Version
D4.8.4.x.3	Firmware interface

S5.8.5 Hardware Information

HARDWARE

The Hardware information page provides information on the following hardware-related topics:

Hardware Information

Name	Content
I5.8.5.1	Nominal power of the unit
I5.8.5.2	Nominal voltage of the unit
E5.8.5.3	Brake chopper
E5.8.5.4	Brake resistor

S5.8.6 Expander Board Information

EXPANDER BOARDS

This parameter and its sub-items provide information about the basic and option boards plugged into the control board as shown in the table below. Note that the "x" in the table refers to the sequential number of the slot, with slot A being "1" and slot E being "5".

Expander Board Information

Name	Content
E5.8.6.x	Slot "x" board identification
E5.8.6.x.1	Operating state
E5.8.6.x.2	Software version

S5.8.7 Debug Menu

DEBUG

This menu is meant for advanced users and application designers. Contact the factory for any assistance needed.

Expander Board Menu (M6)

The Expander Board Menu makes it possible for the user to:

- See what expander boards are connected to the control board and
- Access and edit the parameters associated with the expander board

Expander Board Menu Structure

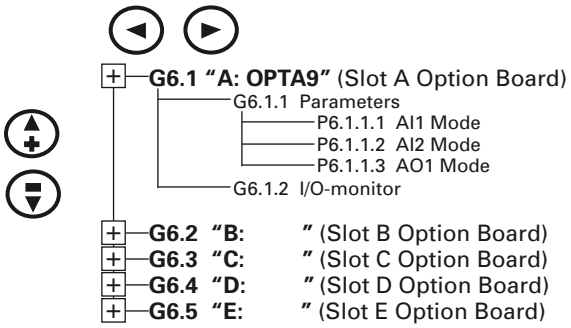

Example of Expander Board Parameters for Option Board A9

P6.1.1.1 **AI1 Mode**	Range: 1–5	Default: 3
	AI1 MODE Analog Input 1 input options: 1 0 to 20 mA 2 4 to 20 mA 3 0 to 10V 4 2 to 10V 5 –10 to 10VP	
P6.1.1.2 **AI2 Mode**	Range: 1–5	Default: 1
	AI2 MODE Analog Input 2 input options: 1 0 to 20 mA 2 4 to 20 mA 3 0 to 10V 4 2 to 10V 5 –10 to 10VP	
P6.1.1.3 **AO1 Mode**	Range: 1–4	Default: 1
	AO1 MODE Analog Output 1 output options: 1 0 to 20 mA 2 4 to 20 mA 3 0 to 10V 4 2 to 10V	

Monitoring Menu (M7)

The Monitoring Menu items are meant for viewing parameter values during operation. Monitored values are updated every 0.3 second Monitored items are identified by item numbers V7.1 to V1.xx, where "xx" varies by application. The table below provides an example of the monitored values for the **Standard** application.

Monitored parameters are not editable from this menu (see Parameter Menu [M1] to change parameter values).

Monitoring Menu Items—Standard Application Example

Code	Signal Name	Unit	Description
V7.1	Output frequency	Hz	Output frequency
V7.2	Frequency reference	Hz	Frequency reference setting
V7.3	Motor speed	rpm	Calculated motor speed
V7.4	Motor current	A	Measured motor current
V7.5	Motor torque	%	Calculated torque based on nominal motor torque
V7.6	Motor power	%	Calculated power based on nominal motor power
V7.7	Motor voltage	V	Calculated motor voltage
V7.8	DC bus voltage	V	Measured DC bus voltage
V7.9	Unit temperature	°C	Heatsink temperature
V7.10	Calculated motor temperature	°C	Calculated motor temperature based on the motor nameplate information and the calculated motor load
V7.11	Analog Input 1	V	Voltage input at terminals AI1+ and GND
V7.12	Analog Input 2	mA	Current input at terminals AI2+ and AI2–
V7.13	DIN1, DIN2, DIN3	—	Digital input status (see figure below)
V7.14	DIN4, DIN5, DIN6	—	Digital input status (see figure below)
V7.15	DO1, RO2, RO3	—	Digital and relay output status (see figure below)
V7.16	Analog I_{out}	mA	Current output at terminals AO1+ and AO1–

Digital Inputs— DIN1, DIN2, DIN3 Status

```
V1.13
DIN1, DIN2, DIN3
 OFF  ON   OFF
```

Digital and Relay Outputs— DO1, RO1, RO2 Status

```
V1.15
DO1, RO1, RO2
 OFF  OFF  ON
```

Digital Inputs— DIN4, DIN5, DIN6 Status

```
V1.14
DIN4, DIN5, DIN6
 ON   OFF  OFF
```

Multimonitor (V7.17)

This parameter allows the viewing and selection (if allowed by system menu item, P5.5.4) of three simultaneously monitored items from the Monitored Menu Items shown in the table above. Use the right arrow key to select the item to be modified and then the up or down arrow keys to select the new item. Press the ENTER key to accept the change.

Operate Menu (M8)

The Operate Menu provides an easy-to-use method of viewing key numerical Monitoring Menu items. Some applications also support the setting of reference values in this menu. The items displayed vary by application. The table below is an example for the standard application.

Operate Menu Items—Standard Application Example

Code	Signal Name	Unit	Description
0.1	Output frequency	Hz	Output frequency
0.2	Freqreference	Hz	Frequency reference
0.3	Motor speed	rpm	Calculated motor speed
0.4	Motor current	A	Measured motor current
0.5	Motor torque	%	Calculated torque based on nominal motor torque
0.6	Motor power	%	Calculated power based on nominal motor power
0.7	Motor voltage	V	Calculated motor voltage
0.8	DC bus voltage	V	Measured DC bus voltage
0.9	Unit temperature	°C	Heatsink temperature
0.10	Motortemperature	%	Calculated motor temperature based on the motor nameplate information and the calculated motor load
R1	Keypad reference	Hz	Keypad frequency reference setting

The menu is navigated by using the left and right arrow buttons. If a reference level is available for setting, the up and down arrow buttons adjust the value. To exit the Operate Menu to access the other menus, depress the ENTER button for 2 seconds. While in the other menus, if there is no keypad activity, the display will return to the Operate Menu after 30 seconds. The figure below illustrates the Operate Menu button function.

Operate Menu Navigation

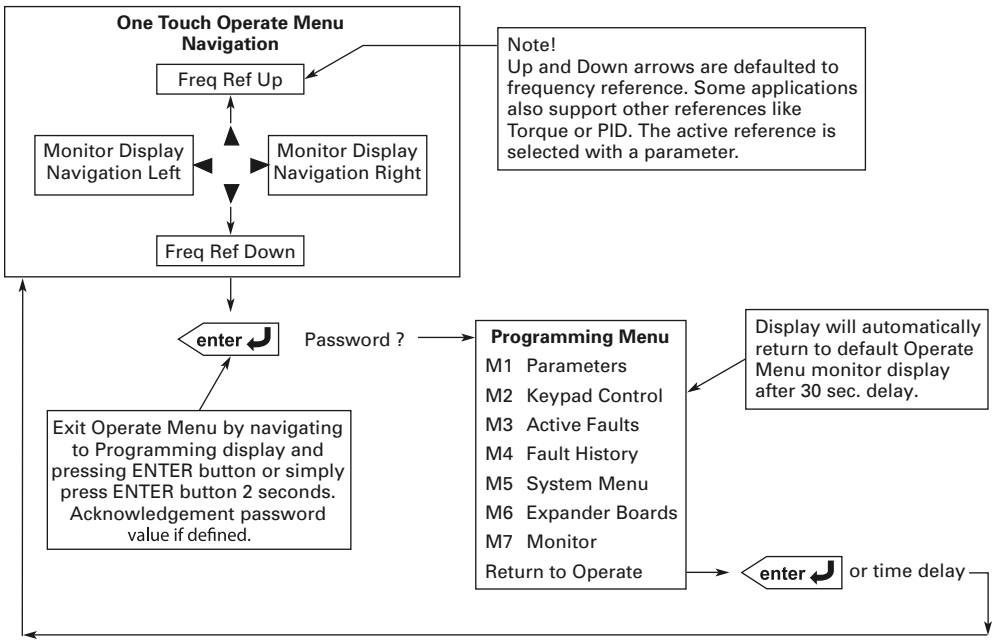

Startup Wizard

Upon initial power up, the **Startup Wizard** guides the commissioner through the basic SVX9000/SPX9000 setup. The **Startup Wizard** may be set to function upon an application change by setting parameter P5.5.3.

Upon power up, the display will read:
"Startup Wizard"
"Press enter"

Upon pressing ENTER, the choice for the language to be used followed by the application desired are presented. The lists are navigated by using the right arrow and up and down arrow buttons. A selection is confirmed by pressing ENTER. After these two selections, the following text appears:
"Setup starts"
"Press enter"

When ENTER is pressed, the setup parameter list is presented. The parameter value will be blinking, allowing you to set the parameters with the arrow buttons. The value is confirmed using the ENTER button, after which the next parameter in the list will be displayed.

After the last setup parameter is presented, the following text is displayed:
"Repeat setup?"
"Press ➔"

If the left arrow is pressed, the Startup Wizard restarts.
If the ENTER button is pressed, the following is displayed:
"Setup done"

After this, the display returns to the default page, normally the Operate Menu.

Startup

Safety Precautions

Before startup, observe the warnings and safety instructions provided throughout this manual.

WARNING

1. **Internal components and circuit boards (except the isolated I/O terminals) are at utility potential when the SVX9000/SPX9000 is connected to the line. This voltage is extremely dangerous and may cause death or severe injury if you come in contact with it.**
2. **When the SVX9000/SPX9000 is connected to the utility, the motor connections U (T1), V (T2), W (T3) and DC bus/brake resistor connections B–, B+, and R– are live even if the motor is not running.**
3. **Do not make any connections when the AF drive is connected to the utility line.**
4. **Do not open the cover of the AF drive immediately after disconnecting power to the unit, because components within the drive remain at a dangerous voltage potential for some time. Wait at least five minutes after the cooling fan has stopped and the keypad or cover indicators are dark before opening the SVX9000/SPX9000 cover.**
5. **The control I/O terminals are isolated from the utility potential, but relay outputs and other I/Os may have dangerous external voltages connected even if power is disconnected from the SVX9000/SPX9000.**
6. **Before connecting to the utility, make sure that the cover of the drive is closed.**

Overview

The SVX9000/SPX9000 control can be used to operate induction motors using the applications included in the system software delivered with the drive. Higher performance permanent magnet (PM) synchronous motors and other functions of the frequency converter (FC) are accomplished by loading special applications with the 9000XLoad software tool. The following sections describe how to commission the drive for motor control in all applications. See the All-in-One or special application manual for additional startup information or details on the parameters. Parameters are available (visible) based on the application selected, the type of control (SVX or SPX), the option boards installed in the control and the version of the system software loaded in the control. In general, the SVX controls are limited to V/Hz and open loop speed control of induction motors while the SPX control will work with any application, and option board. Before starting the commissioning process, select the type of control, option boards, and the size of the drive to meet the needs of the application, and check that the latest system software is loaded. Open loop or sensorless control means that motor control is accomplished by the standard drive unit without added speed/position feedback devices and associated option cards. Vector control means that the drive can differentiate between torque producing and magnetizing current when reading motor phase currents. The "rotor flux oriented, current vector control" allows the AC drive to control an induction motor in the same manner as a separately excited DC motor.

Open Loop Vector Control Operations

The SVX9000/SPX9000 control normally operates an induction motor in V/Hz or open loop vector control (speed control) mode. By default, the ID run is designed to automatically configure parameters for the programmable volts per hertz (V/f) curve and make a stator resistance measurement for a standard induction motor. If the ID run does not give the proper performance, manual tuning of the control is required and described in later sections.

Frequency Controlled Application

For pumps and fans, the application is usually frequency controlled and there is no need for high torque on low speed. A straight V/f curve (“linear” V/Hz ratio type) is all that is required for proper operation. Because pumps and fans are variable torque, selecting “Squared” for V/Hz ratio type will give some energy savings. Compensation for measured stator resistance voltage drop will improve performance, and selecting “Auto Torque Boost” will help start the motor if necessary. The SLX/SVX controls will operate a PM motor open loop, but manual tuning of the V/f curve is required.

Speed Controlled Application

When an application is speed controlled and high torque at low speed is needed, it is often necessary to complete the ID run; select auto torque boost to help start the motor, and set the drive to speed control mode to compensate for the slip of the induction motor.

Closed Loop Vector Control Operations

Closed loop vector mode provides the best performance for speed and torque control; especially in low speed, high torque applications, including full torque at zero speed. The SPX is required for closed loop control with a speed or position feedback device. The closed loop ID run is similar to the open loop mode ID run.

PM Motor Control Operations

The SPX control can be used to control a synchronous PM motor open loop, or closed loop with a resolver or absolute encoder. Best low speed, high torque performance is achieved with a position feedback device. The high performance multi-purpose application has a selection for PM motor control. The PM motor Encoder ID run determines the zero position of the rotor and stores it to a parameter for use when the load is connected.

Sequence of Operation to Commission an Induction Motor

1. Read and follow all safety warnings and cautions in this manual.
2. At installation, ensure:

   That the SVX9000/SPX9000 and motor are connected to ground.

   That the utility and motor cables are in accordance with the installation and connection instructions as detailed starting on **Page 5**.

   That the control cables are located as far as possible from the power cables as detailed starting on **Page 21**. That control cable shields are connected to protective ground. That no wires make contact with any electrical components in the SVX9000/SPX9000.

   That the common input of each digital input group is connected to ground or +24V of the I/O terminal supply or an external supply as detailed here.
3. Check the quality of the cooling air as detailed starting on **Page 3.**
4. Check that moisture has not condensed inside the SVX9000/SPX9000.
5. Check that all START/STOP switches connected to the I/O terminals are in the STOP state.
6. Connect the SVX9000/SPX9000 to the utility and switch the power on. For the initial power-up, you will enter the **Startup Wizard**, which will guide you through application selection and basic parameter setup. See the **Startup Wizard** on **Page 46** for more information. After completing the **Startup Wizard**, proceed to step 8. If this is not the initial power-up, the keypad will default to the Operate Menu. Depress the ENTER button for 2 seconds to enter the Parameter Menu. Proceed to step 7.
7. Ensure that the Group 1 parameters match the application by setting, at minimum, the following parameters to match the motor nameplate:

   Nominal voltage of the motor.

   Nominal nameplate frequency of the motor.

   Nominal nameplate full load speed of the motor.

   Motor nominal current.

   Motor power factor.

   Motor type (select PM motor in Group 6 of special app)
8. Perform either Test A or Test B without the motor connected to the SVX9000/SPX9000.

   Test A—Control from the Control Panel

   Apply input power to the SVX9000/SPX9000.

   Press the keypad START button.

   If not in the Operate Menu, go to the Monitoring Menu and check that the output frequency follows the keypad reference.

   Press the keypad STOP button.

   Test B—Control from the I/O Terminals

   Apply input supply power to the SVX9000/SPX9000.

   Change control from the keypad to the I/O terminals using the LOCAL/REMOTE button.

   Start the drive by closing the START/STOP input on DIN1.

   Change the frequency reference setting on AI1.

   If not in the Operate Menu, go to the Monitoring Menu and check that the output frequency follows the frequency reference.

   Stop the drive by opening the START/STOP input on DIN1.
9. Disconnect all power to the SVX9000/SPX9000. Wait until the cooling fan on the unit stops and the indicators on the panel are not lit. If no keypad is present, check the indicators in the control panel cover. Wait at least five more minutes for the DC bus to discharge. Connect the motor to the SVX9000/SPX9000. If possible, perform a startup test or ID run with the motor connected to the SVX9000/SPX9000 but not connected to the process. If the SVX9000 must be tested with the motor connected to the process, perform it under no-load conditions.
10. Repeat Test 8A or 8B to check operation of the motor without the process or load. Note proper motor current, voltage, and direction of shaft rotation. If an encoder card is installed, set encoder parameters in the expander board menu and monitor frequency and speed from the encoder board. Frequency should match output frequency of the drive with a positive value for forward direction. If encoder frequency is opposite, change motor phase order, encoder connection, or select "invert" on the expander board menu. For many pump or fan applications, no tuning is required. If further tuning is necessary, perform the tuning while the motor is disconnected from the process.

11. Perform ID Run. Setting the identification parameter to the appropriate value Par/group P1.6.16 followed by a start command within 20 seconds activates automatic identification. (See Test 8A or 8B for start command.) Upon completion, cancellation by a stop command or if timely start is not received, the parameter will reset to its default setting. Possible ID run selections are as follows:

    OL V/f Ratio—The drive is run at zero speed to identify the motor parameters. (Earlier system software version.)

    OL V/f +Boost—The drive is run at zero speed to identify the motor parameters and automatic torque boost is turned on. (Earlier system software version.)

    Identification without motor run—The drive is run at zero speed to identify the motor parameters.

    Identification with motor run—The drive is run at 2/3 rated speed to identify the motor parameters. (No load on motor.)

    Encoder ID run—Identifies the shaft zero position when using PM motor with absolute encoder or resolver feedback.

12. When ID Run is complete as shown by a stop indication on the keypad, reset the drive with a stop command according to Test 8A or 8B. Set the motor control mode to OL Speed Control, CL Speed Control if appropriate for the application and repeat Test 8A or 8B.

13. If necessary, skip to the next section to perform manual tuning functions before connecting the motor to the process.

14. Disconnect all power to the SVX9000/SPX9000. Wait until the cooling fan on the unit stops and the indicators on the panel are not lit. If no keypad is present, check the indicators in the control panel cover. Wait at least five more minutes for the DC bus to discharge. Connect the motor to the driven load, making sure mechanical system requirements are met. Make sure that the driven load can be run safely and that no hazard exists to any personnel. Repeat Test 8A or 8B.

Manual Tuning of the SVX9000/SPX9000

Proper tuning of the open loop speed control will give better torque control accuracy for improved motor performance. The aim of tuning is to get the motor model as close to the actual motor as possible through proper setting of parameters. Open loop tuning consists of three functions, 1) V/f curve tuning, 2) stator resistance measurement, and 3) compensation for slip.

Open Loop Tuning

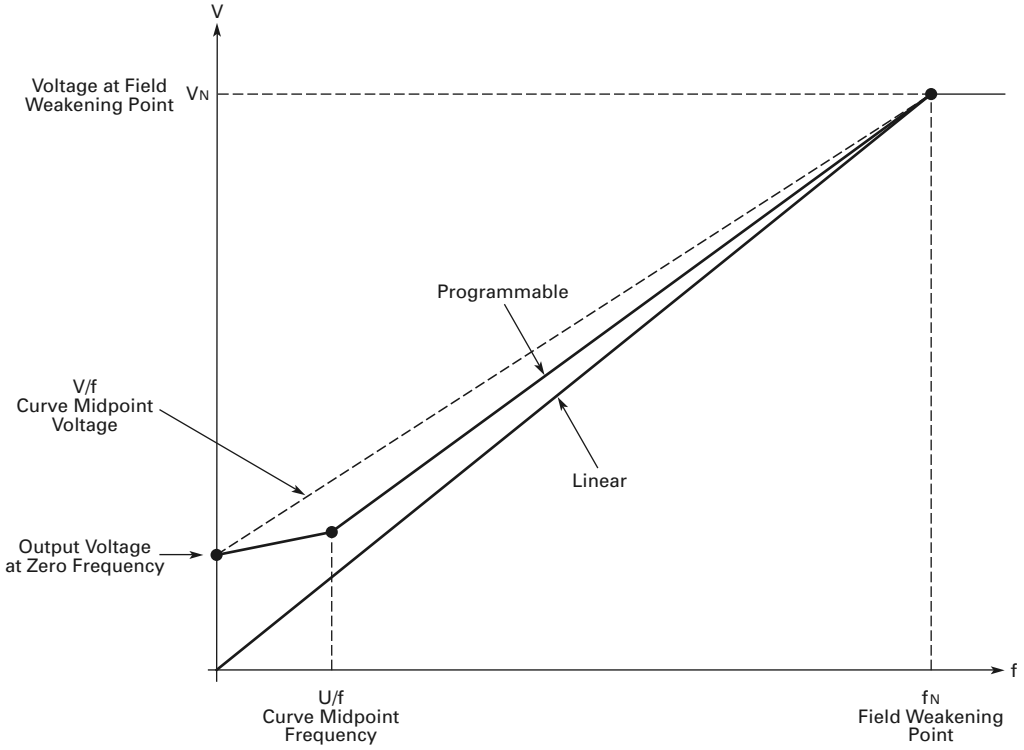

V/f Curve Manual Tuning

When tuning the V/f curve manually (not using identification run) the motor shaft must be unloaded and the motor control mode set to frequency control (P1.6.1). The following parameters are adjusted to tune the V/f curve:

Parameters

V/f ratio selection	P1.6.3
Field weakening point	P1.6.4
Voltage at field weakening point	P1.6.5
V/f curve midpoint frequency	P1.6.6
V/f curve midpoint voltage	P1.6.7
Output voltage at zero frequency	P1.6.8

When using a linear V/f curve with increased zero frequency voltage, ensure that the motor current does not increase too much between 3–7 Hz.

Tuning Steps

Set the motor nameplate values.

Nominal voltage of motor	P1.1.6
Nominal frequency of motor	P1.1.7
Nominal speed of motor	P1.1.8
Nominal current of motor	P1.1.9
Motor Power Factor (Cos Phi)	P1.1.10

Run the motor unloaded at 2/3 rated speed using a frequency reference. Read the motor current from the monitoring menu (V7.4) or use 9000X drive for monitoring. This current is the motor magnetizing current. This value should match a nameplate magnetizing current value if given.

If the motor will only be run in closed loop, skip to section on closed loop vector control tuning.

Change the V/f curve ratio selection to programmable-mode = 2 (P1.6.3).

Run motor with zero frequency reference and increase motor zero point voltage (P1.6.8) until motor current is approximately the same as the motor magnetizing current. (If motor is only in the low frequency area for short periods, it is possible to use up to 80% of rated current.)

Then, set the midpoint voltage (P1.6.7) to 1.4142 *P1.6.8 ($\sqrt{2}$ * Zero Point Voltage) and midpoint frequency (P1.6.6) to value P1.6.8/100%*P1.1.7. ([ZeroPoint Voltage/100%]*Nominal frequency of motor.)

$$P1.67 = \sqrt{2} * P1.6.8 \qquad P1.6.6 = \frac{P1.6.8}{100} * P1.1.7$$

Hint for the 9000X Drive User:

When zero point voltage is set correctly, run motor with slow ramp (~20s) to 1/2 of rated frequency. Show output frequency and motor current in the 9000X drive monitoring window. If midpoint parameters are set correctly, motor current should be stable during acceleration.
(heavy solid line in figure below).

If there is a peak in the monitored motor current (heavy dashed line in figure below), check what the output frequency is at the maximum current point, and set this value for midpoint frequency (P1.6.6). Then readjust midpoint voltage for a stable current performance during acceleration.

Motor Current after V/f Curve Tuning

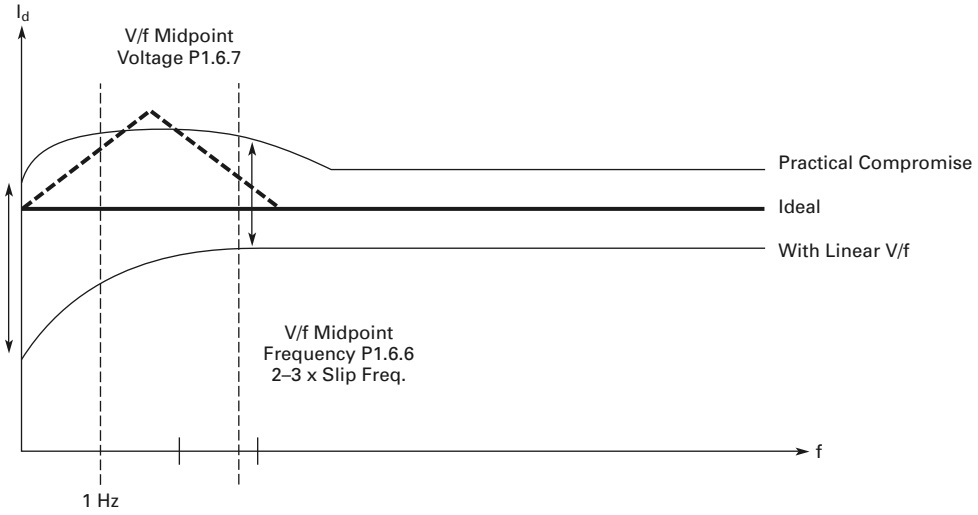

Stator Resistance Measurement Using DC Brake at Start

1. Define the DC brake current (=motor nominal current) (P1.4.8).
2. Set the DC brake time at start to 2 seconds (P1.4.11).
3. Give start command.

The drive will correct the stator impedance to improve the motor torque calculation. This also improves slip compensation accuracy. (Stator resistance voltage loss compensation, see figure below.)

If the DC brake time at start is set back to zero, the calculated stator impedance value goes back to default if the drive's power is switched off. (Identification will retain all values in memory.)

Motor Current Equivalent Circuit

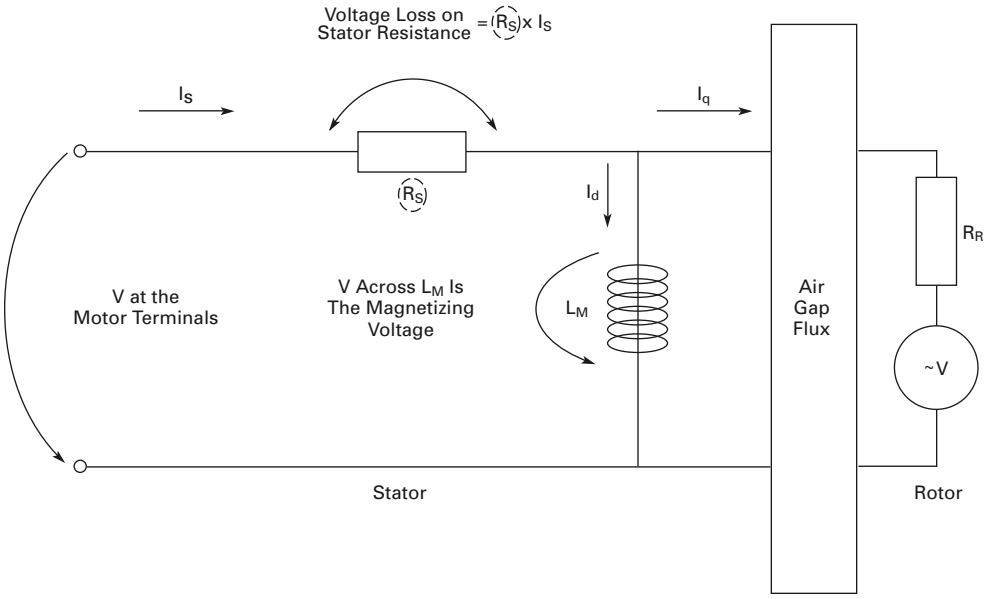

Change the motor control mode to the speed control (P1.6.1 = 1).

Change the V/f optimization (auto torque boost) to on if more torque is needed on low frequencies (P1.6.2). Note, this will increase motor voltage while loading motor, check motor current draw.

Note: In high torque–low speed applications it is likely that the motor will overheat. If the motor has to run a prolonged time under these conditions, special attention must be paid to cooling the motor.

Slip Compensation in Open Loop

The drive uses motor torque and motor nominal RPM to compensate slip. If motor nominal RPM is 1710 -> nominal slip is 90 RPM, and when motor torque is 50% slip is 45 RPM. To keep reference, speed drive must increase output frequency by:

$$\frac{50\%*90\ \text{RPM}}{1800\ \text{RPM}} * 60.00\ \text{Hz} = 1.50\ \text{Hz}$$

OL Speed Control Off

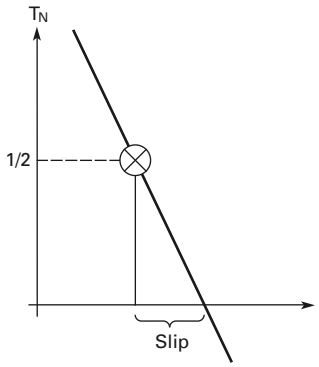

OL Speed Control On

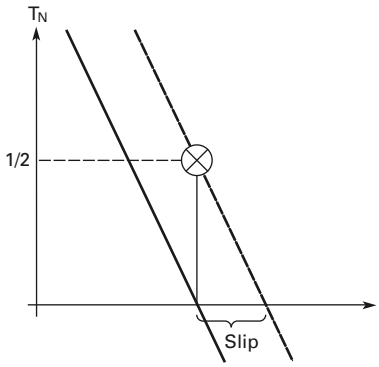

.

Closed Loop Vector Control Manual Tuning (SPX9000 Only)

For some non-standard motors, the auto-tune is not sufficient. Closed loop control mode is used when enhanced performance near zero speed and better steady starts and dynamic speed accuracy at higher speeds are needed.

Tuning Steps

Set the motor nameplate values.

Nominal voltage of motor	P1.1.6
Nominal frequency of motor	P1.1.7
Nominal speed of motor	P1.1.8
Nominal current of motor	P1.1.9
Motor Power Factor (Cos Phi)	P1.1.10

Check encoder pulse/revolution rate and set this value to expander menu P6.3.1.1. Parameter is only visible if OPTA4 or OPTA5 is installed to slot C.

Set motor control mode to open loop frequency control (P1.6.1 = 0).

Run the motor unloaded at 2/3 rated speed using a frequency reference. Read the motor current from the monitoring menu (V1.4) or use 9000X drive for monitoring. This current is the motor magnetizing current. This value should match a nameplate magnetizing current value if given.

Set the motor magnetizing current P1.6.17.1.

Closed Loop Motor Voltage

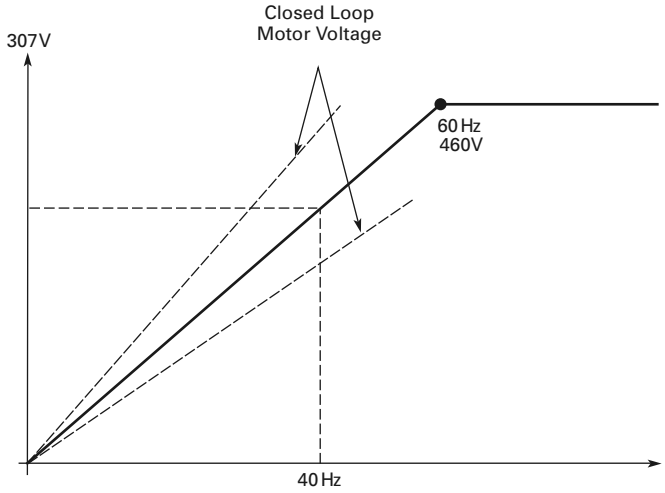

Check the expander board menu (monitoring page V6.3.2.1), to be sure that the encoder frequency is approximately the same as the output frequency, and that the direction is correct. If the encoder frequency direction is opposite the output frequency (negative value), change the motor phase order to encoder connection. The expander board menu also has a parameter to invert the signal if rewiring is not an option.

Set motor control mode to closed loop (P1.6.1 = 3 or 4).

Fine Tuning

Tune parameter P1.6.17.6 (slip adjust) to get the motor voltage slightly above the linear V/f curve when motor is loaded and slightly below when motor is generating.

Using the linear V/f curve (P1.6.3 = 0), run the motor in frequency control mode (P1.6.1 = 0) at about 2/3 of the motor nominal frequency and check motor voltage (V7.7).

At 40 Hz, voltage should be 40/60*460V = 307V.

Run the motor in closed loop control mode with same reference and check the motor voltage. Adjust P1.6.17.6 (slip adjust) so that motor voltage is slightly above the linear V/f curve. If motor voltage is low, decrease the value of slip adjust (P1.6.17.6).

Fine Tuning Parameters

Adjust the following parameters for optimum performance in closed loop mode:

613 Speed Control P Gain

Sets the gain for the speed controller in % per Hz. 100 means nominal torque with 1 Hz frequency error.

614 Speed Control I Time

Sets the integral time constant for the speed controller. Too short integration time makes the control unstable.

620 Load Drooping

Setting a proper value to the LoadDrooping parameter enables the load drooping. This function causes the speed to decrease as the load torque increases. At rapid load changes, this gives a smoother torque response, when a part of the required power is taken from the system inertia. This operation causes a constant, torque-dependent steady-state error in speed response.

626 Acceleration Compensation

Sets the inertia compensation to improve speed response during acceleration and deceleration. The time is defined as acceleration time to nominal speed with nominal torque. This parameter is active also in advanced open loop mode.

627 Magnetizing Current at Start

628 Magnetizing Time at Start

These parameters are certain type of DC brake in start. With these parameters it is possible to shorten the time needed to fully magnetize the motor, especially when motor is big.

615 Zero Speed Time at Start

After giving the start command, the drive will remain at zero speed for the time defined by this parameter. The ramp is released to follow the set frequency/speed reference after this time has elapsed.

616 Zero Speed Time at Stop

The drive will remain at zero speed with controllers active for the time defined by this parameter after reaching the zero speed when a stop command is given. This parameter has no effect if the selected stop function (P1.4.7) is coasting.

621 Startup Torque

This parameter selects the startup torque.

Torque memory is used in crane applications. Startup torque FWD/REV can be used in other applications to help the speed controller.

0 = Not Used
1 = TorqMemory
2 = Torque Ref
3 = Torq.Fwd/Rev

633 Startup Torque, Forward

Sets the startup torque for forward direction, if selected with par. 1.6.17.12.

634 Startup Torque, Reverse

Sets the startup torque for reverse direction, if selected with par. 1.6.17.13.

107 Current Limit

This parameter determines the maximum motor current from the frequency converter. The parameter value range differs from size to size. On closed loop control mode, this limits torque (= torque producing current).

For example, if motor magnetizing current is 2.0A and current limit is 1.0A, total motor current can be:

Closed Loop Current Limit

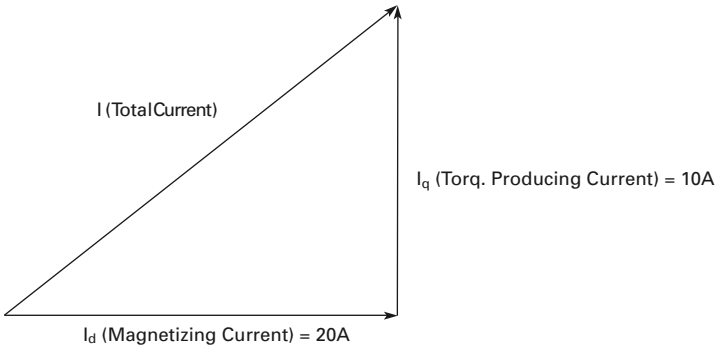

$$I^2 = I_d^2 + I_q^2$$

$$I = \sqrt{I_d^2 + I_q^2} \longrightarrow I = 2.24A$$

Technical Data

General

The figure below shows a block diagram of the SVX9000/SPX9000 drive. The SVX9000/SPX9000 physically consists of two sections, the power unit and the control unit. The three-phase **AC Choke** with the **DC Link Capacitor** form a LC filter, which together with the **Rectifier** produce the DC voltage for the **IGBT Inverter** block. The **AC Choke** smooths the disturbances from the utility into the SVX9000/SPX9000 as well as the high frequency disturbances caused by the SVX9000/SPX9000 on the utility line. It also improves the input current waveform to the SVX9000/SPX9000. The **IGBT Inverter** produces a symmetrical three-phase pulse width modulated adjustable frequency AC voltage to the motor.

The **Motor and Application Control** block contains a microprocessor with customized software. The microprocessor controls the motor based on **Measured Signals**, parameter value settings, and commands from the **Control I/O Block** and the **Control Module**. The **Motor and Application Control** block commands the **Motor Control ASIC** which calculates the IGBT switching positions. **Gate Drivers** amplify these signals for driving the **IGBT Inverter**.

The **Control Keypad** is a link between the user and the SVX9000/SPX9000. With the **Control Keypad**, the user can set parameter values, read status information, and issue control commands. The **Control Keypad** is removable and can be mounted externally and connected with the appropriate cable. Instead of the **Control Keypad**, a PC can be used to control the SVX9000/SPX9000 by cable connecting it where the **Control Keypad** is normally connected or through an option board.

The **Control I/O Block** is isolated from line potential and may be connected to or isolated from ground by the choice of the control I/O board that is used. OPTA8 is isolated ground, OPTA1 and OPTA9 are not.

Input and Output EMC-Filters are not required for the functionality of the SVX9000/SPX9000. They are only needed for compliance with the EU EMC directive as detailed in the following section.

SVX9000/SPX9000 Block Diagram

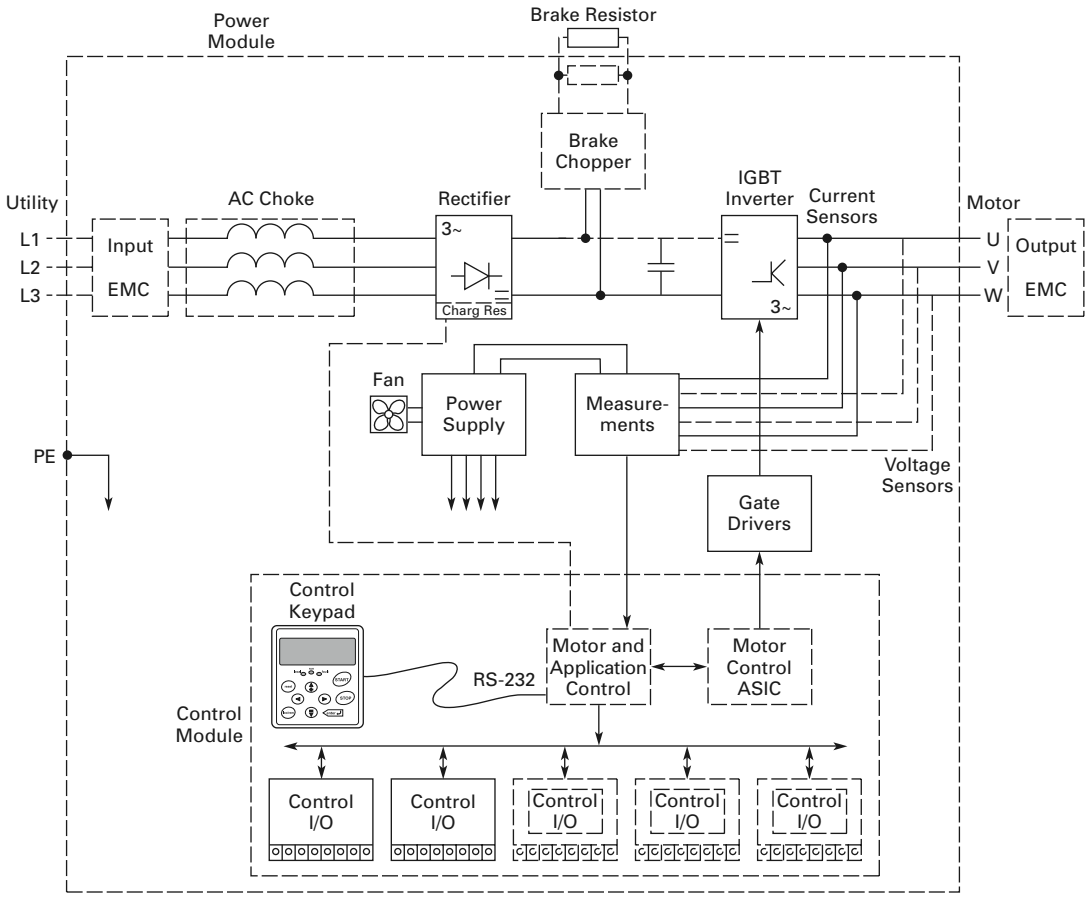

Specifications

SVX9000/SPX9000 Drive Specifications

Description	Specification
Power Connections	
Input voltage (V_{in})	208–240V +10%/–15%
	380–500V +10%/–15%
	525–690V +10%/–15%
Input frequency (f_{in})	50/60 Hz (variation up to 45–66 Hz)
Connection to utility power	Once per minute or less (typical operation)
Maximum symmetrical supply current	208–240V, 100 kAIC
	380–500V, 100 kAIC
	525–690V, 100 kAIC
Motor Connections	
Output voltage	0 to V_{in}
Continuous output current	Ambient temperature max. 122°F (50°C), overload 1.5 x I_H (1 min. out of 10 min.)
Starting current	200% for 2 seconds
Output frequency	0 to 320 Hz standard (optional frequencies available)
Frequency resolution	0.01 Hz
Control Characteristics	
Control method	SVX frequency control (V/f)
	SVX open loop sensorless vector
	SPX open loop sensorless vector control
	SPX closed loop control
Switching frequency	Adjustable with parameter 2.6.9
	208–230V: 3/4–15 hp: 1 to 16 kHz; 20–30 hp: 1 to 6 kHz
	380–500V: 1–30 hp: 1 to 16 kHz; 40–200 hp: 1 to 6 kHz
	525–690V: All sizes: 1 to 6 kHz
Frequency reference	Analog input: resolution 0.1% (10-bit), accuracy ±1%
	Panel reference: resolution 0.01 Hz
Field weakening point	30 to 320 Hz
Acceleration time	0.1 to 3000 sec.
Deceleration time	0.1 to 3000 sec.
Braking torque	DC brake: 15% to 150% x T_n (without brake option)
Environment	
Ambient operating temperature	14°F (–10°C), no frost to 122°F (50°C) I_H 14°F (–10°C), no frost to 104°F (40°C) I_L
Storage temperature	–40°F (–40°C) to 158°F (70°C)
Relative humidity	0 to 95% RH, noncondensing, noncorrosive, no dripping water
Air quality	Chemical vapors: IEC 60721-3-3, unit in operation, Class 3C2
	Mechanical particles: IEC 60721-3-3, unit in operation, Class 3S2
Altitude	100% load capacity (no derating) up to 3300 ft (1000m); 1% derating for each 330 ft (100m) above 3300 ft (1000m); max. 10,000 ft (3000m)

SVX9000/SPX9000 Drive Specifications, continued

Description	Specification
Environment, continued	
Vibration	EN 50178, EN 60068-2-6
	5 to 50 Hz, displacement amplitude 1 mm (peak) at 3 to 15.8 Hz, max. acceleration amplitude 1G at 15.8 to 150 Hz
Shock	EN 50178, EN 60068-2-27
	UPS drop test (for applicable UPS weights)
	Storage and shipping: max. 15G, 11 ms (in package)
Enclosure class	NEMA 1/IP21 available all ratings
	NEMA 12/IP54 available all ratings
Standards	
EMC (at default settings)	Immunity: Fulfils all EMC immunity requirements
	Emissions: EN 61800-3
Safety	UL 508C
Product	IEC 61800-2
Control Connections	
Analog input voltage	0 to 10 Vdc, R–200k ohms differential (–10 to 10 Vdc joystick control)
	Resolution 0.1%; accuracy ±1%
Analog input current	0(4) to 20 mA; R_i–250 ohms differential
Digital inputs (6)	Positive or negative logic; 18 to 24 Vdc
Auxiliary voltage	+24V ±15%, max. 250 mA
Output reference voltage	+10V +3%, max. load 10 mA
Analog output	0(4) to 20 mA; R_L max. 500 ohms
	Resolution 10 bit
	Accuracy ±2% or 0 to 10 Vdc, R_L 1k ohms, select with jumper
Digital output	Open collector output, 50 mA/48V
Relay output	3 programmable change-over relay outputs
	Switching capacity: 24 Vdc/8A, 250 Vac/8A, 125 Vdc/0.4A
	Minimum switching load: 5V/10 mA
	Continuous capacity: <2 A_{rms}
Protections	
Overcurrent protection	Yes
Undervoltage protection	Yes
Ground (earth) fault	In case of a ground fault in the motor or motor cables, only the SVX9000/SPX9000 is protected
Input phase supervision	Trips if any of the input phases are missing
Motor phase supervision	Trips if any of the output phases are missing
Overtemperature protection	Yes
Motor overload protection	Yes
Motor stall protection	Yes
Motor underload protection	Yes
Short circuit protection of the +24V and +10V reference voltages	Yes

SVX9000/SPX9000 Series Drives

208–240V Power Ratings—NEMA Type 1/IP21 or NEMA Type 12/IP54

230V/60 Hz Three-Phase Input

	hp (I_H)	kW (I_H)	Current (I_H)	hp (I_L)	kW (I_L)	Current (I_L)	Switching Frequency			Heat Losses	Catalog Number
Frame Size	Horsepower	Open Drive kW	High Overload Full Load Amps at 40°C	Horsepower	Open Drive kW	Low Overload Full Load Amps at 40°C	Min	Max	Default	Watts at Rated Output and Default SF	Values for "x" 1 = N1 = IP21 2 = N12 = IP54
FR4	3/4	0.55	3.7	1	0.75	4.8	1	16	10	19	**SVXF07Ax-2A1B1**
	1	0.75	4.8	1-1/2	1.1	6.6	1	16	10	28	**SVX001Ax-2A1B1**
	1-1/2	1.1	6.6	2	1.5	7.8	1	16	10	38	**SVXF15Ax-2A1B1**
	2	1.5	7.8	3	2.2	11	1	16	10	55	**SVX002Ax-2A1B1**
	3	2.2	11	—	3	12.5	1	16	10	75	**SVX003Ax-2A1B1**
FR5	—	3	12.5	5	4	17.5	1	16	10	100	**SVX004Ax-2A1B1**
	5	4	17.5	7-1/2	5.5	25	1	16	10	138	**SVX005Ax-2A1B1**
	7-1/2	5.5	25	10	7.5	31	1	16	10	188	**SVX007Ax-2A1B1**
FR6	10	7.5	31	15	11	48	1	16	10	275	**SVX010Ax-2A1B1**
	15	11	48	20	15	61	1	16	10	375	**SVX015Ax-2A1B1**
FR7	20	15	61	25	18.5	75	1	6	3.6	463	**SVX020Ax-2A1N1**
	25	18.5	75	30	22	88	1	6	3.6	550	**SVX025Ax-2A1N1**
	30	22	88	40	30	114	1	6	3.6	750	**SVX030Ax-2A1N1**
FR8	40	30	114	50	37	140	1	6	3.6	925	**SVX040Ax-2A1N1**
	50	37	140	60	45	170	1	6	3.6	1125	**SVX050Ax-2A1N1**
	60	45	170	75	55	205	1	6	3.6	1375	**SVX060Ax-2A1N1**
FR9	75	55	205	100	75	261	1	6	3.6	1875	**SVX075Ax-2A1N1**
	100	75	261	125	90	300	1	6	3.6	2250	**SVX100Ax-2A1N1**

380–500V Power Ratings—NEMA Type 1/IP21 or NEMA Type 12/IP54

480V/60 Hz Three-Phase Input

Frame Size	hp (I_H) Horsepower	kW (I_H) Open Drive kW	Current (I_H) High Overload Full Load Amps at 40°C	hp (I_L) Horsepower	kW (I_L) Open Drive kW	Current (I_L) Low Overload Full Load Amps at 40°C	Switching Frequency Min	Switching Frequency Max	Switching Frequency Default	Heat Losses Watts at Rated Output and Default SF	Catalog Number Values for "x" 1 = N1 = IP21 2 = N12 = IP54 0 = Open
FR4	1	0.75	2.2	1-1/2	1.1	3.3	1	16	10	28	**SVX001Ax-4A1B1**
	1-1/2	1.1	3.3	2	1.5	4.3	1	16	10	38	**SVXF15Ax-4A1B1**
	2	1.5	4.3	3	2.2	5.6	1	16	10	55	**SVX002Ax-4A1B1**
	3	2.2	5.6	5	3	7.6	1	16	10	75	**SVX003Ax-4A1B1**
	5	3	7.6	—	5.5	9	1	16	10	138	**SVX005Ax-4A1B1**
	—	4	9	7-1/2	5.5	12	1	16	10	138	**SVX006Ax-4A1B1**
FR5	7-1/2	5.5	12	10	7.5	16	1	16	10	188	**SVX007Ax-4A1B1**
	10	7.5	16	15	11	23	1	16	10	275	**SVX010Ax-4A1B1**
	15	11	23	20	15	31	1	16	10	375	**SVX015Ax-4A1B1**
FR6	20	15	31	25	18.5	38	1	16	10	463	**SVX020Ax-4A1B1**
	25	18.5	38	30	22	46	1	16	10	550	**SVX025Ax-4A1B1**
	30	22	46	40	30	61	1	16	10	750	**SVX030Ax-4A1B1**
FR7	40	30	61	50	37	72	1	6	3.6	925	**SVX040Ax-4A1N1**
	50	37	72	60	45	87	1	6	3.6	1125	**SVX050Ax-4A1N1**
	60	45	87	75	55	105	1	6	3.6	1375	**SVX060Ax-4A1N1**
FR8	75	55	105	100	75	140	1	6	3.6	1875	**SVX075Ax-4A1N1**
	100	75	140	125	90	170	1	6	3.6	2250	**SVX100Ax-4A1N1**
	125	90	170	150	110	205	1	6	3.6	2750	**SVX125Ax-4A1N1**
FR9	150	110	205	200	132	261	1	6	3.6	3300	**SVX150Ax-4A1N1**
	200	132	245	250	160	300	1	6	3.6	4000	**SVX200Ax-4A1N1**
FR10	250	160	300	300	200	385	1	6	3.6	5000	**SPX250A0-4A2N1**
	300	200	385	350	250	460	1	6	3.6	6250	**SPX300A0-4A2N1**
	350	250	460	400	250	520	1	6	3.6	6250	**SPX350A0-4A2N1**
FR11	400	250	520	500	315	590	1	6	3.6	7875	**SPX400A0-4A2N1**
	500	315	590	—	355	650	1	6	3.6	8875	**SPX500A0-4A2N1**
	—	355	650	600	400	730	1	6	3.6	10,000	**SPX550A0-4A2N1**
FR12	600	400	730	—	450	820	1	6	3.6	11,250	**SPX600A0-4A2N1**
	—	450	820	700	500	920	1	6	3.6	12,500	**SPX650A0-4A2N1**
	700	500	920	800	560	1030	1	6	3.6	14,000	**SPX700A0-4A2N1**
FR13	800	560	1030	900	630	1150	1	6	3.6	15,750	**SPX800A0-4A2N1**
	900	630	1150	1000	710	1300	1	6	3.6	17,750	**SPX900A0-4A2N1**
	1000	710	1300	1200	800	1450	1	6	3.6	20,000	**SPXH10A0-4A2N1**
FR14	1200	900	1600	1500	1000	1770	1	6	3.6	25,000	**SPXH12A0-4A2N1**
	1600	1100	1940	1800	1200	2150	1	6	3.6	30,000	**SPXH16A0-4A2N1**
	1900	1300	2300	2200	1400	2700	1	6	3.6	35,000	**SPXH19A0-4A2N1**

525–690V Power Ratings—NEMA Type 1/IP21 or NEMA Type 12/IP54

575V/60 Hz Three-Phase Input

Frame Size	hp (I_H) Horsepower	kW (I_H) Open Drive kW	Current (I_H) High Overload Full Load Amps at 40°C	hp (I_L) Horsepower	kW (I_L) Open Drive kW	Current (I_L) Low Overload Full Load Amps at 40°C	Switching Frequency Min	Max	Default	Heat Losses Watts at Rated Output and Default SF	Catalog Number Values for "x" 1 = N1 = IP21 2 = N12 = IP54 0 = Open
FR6	2	2.2	3.33	3	3	4.5	1	6	1.5	75	**SVX002Ax-5A4N1**
	3	3	4.5	—	4	5.5	1	6	1.5	100	**SVX003Ax-5A4N1**
	—	4	5.5	5	5.5	7.5	1	6	1.5	138	**SVX004Ax-5A4N1**
	5	5.5	7.5	7-1/2	7.5	10	1	6	1.5	188	**SVX005Ax-5A4N1**
	7-1/2	7.5	10	10	11	13.5	1	6	1.5	275	**SVX007Ax-5A4N1**
	10	11	13.5	15	15	18	1	6	1.5	375	**SVX010Ax-5A4N1**
	15	15	18	20	18.5	22	1	6	1.5	463	**SVX015Ax-5A4N1**
	20	18.5	22	25	22	27	1	6	1.5	550	**SVX020Ax-5A4N1**
	25	22	27	30	30	34	1	6	1.5	750	**SVX025Ax-5A4N1**
FR7	30	30	34	40	37	41	1	6	1.5	925	**SVX030Ax-5A4N1**
	40	37	41	50	45	52	1	6	1.5	1125	**SVX040Ax-5A4N1**
FR8	50	45	52	60	55	62	1	6	1.5	1375	**SVX050Ax-5A4N1**
	60	55	62	75	75	80	1	6	1.5	1875	**SVX060Ax-5A4N1**
	75	75	80	100	90	100	1	6	1.5	2250	**SVX075Ax-5A4N1**
FR9	100	90	100	125	110	125	1	6	1.5	2750	**SVX100Ax-5A4N1**
	125	110	125	150	132	144	1	6	1.5	3300	**SVX125Ax-5A4N1**
	150	132	144	—	160	170	1	6	1.5	4000	**SVX150Ax-5A4N1**
	—	160	170	200	200	208	1	6	1.5	5000	**SVX175Ax-5A4N1**
FR10	200	200	208	250	250	261	1	6	1.5	6250	**SPX200A0-5A2N1**
	250	250	261	300	315	325	1	6	1.5	7875	**SPX250A0-5A2N1**
	300	315	325	400	355	385	1	6	1.5	8875	**SPX300A0-5A2N1**
FR11	400	355	385	450	450	460	1	6	1.5	11,250	**SPX400A0-5A2N1**
	450	450	460	500	500	502	1	6	1.5	12,500	**SPX450A0-5A2N1**
	500	500	502	—	560	590	1	6	1.5	14,000	**SPX500A0-5A2N1**
FR12	—	560	590	600	630	650	1	6	1.5	15,750	**SPX550A0-5A2N1**
	600	630	650	700	710	750	1	6	1.5	17,750	**SPX600A0-5A2N1**
	700	710	750	800	800	820	1	6	1.5	20,000	**SPX700A0-5A2N1**
FR13	800	800	820	900	900	920	1	6	1.5	22,500	**SPX800A0-5A2N1**
	900	900	920	1000	1000	1030	1	6	1.5	25,000	**SPX900A0-5A2N1**
	1000	1000	1030	1250	1150	1180	1	6	1.5	28,750	**SPXH10A0-5A2N1**
FR14	1350	1300	1300	1500	1500	1500	1	6	1.5	37,500	**SPXH13A0-5A2N1**
	1500	1500	1500	2000	1800	1900	1	6	1.5	45,000	**SPXH15A0-5A2N1**
	2000	1800	1900	2300	2000	2250	1	6	1.5	50,000	**SPXH20A0-5A2N1**

Dimensions

Approximate Dimensions in Inches (mm)

NEMA Type 1 and Type 12 Enclosure Dimensions

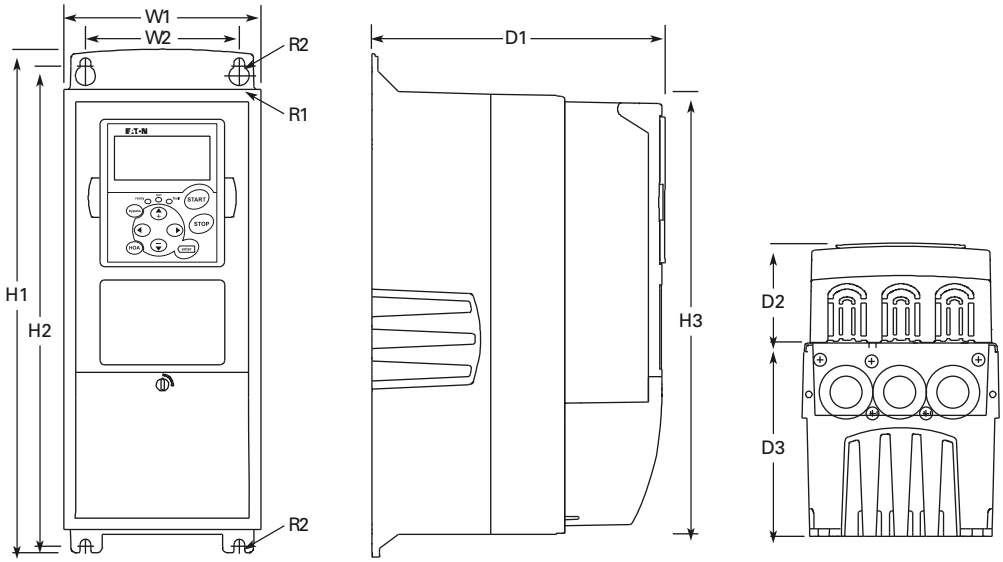

Frame Size	Voltage	hp (I_H)	H1	H2	H3	D1	D2	D3	W1	W2	R1 Dia.	R2 Dia.	Weight Lbs (kg)
FR4	230V	3/4–3	12.9 (327)	12.3 (312)	11.5 (292)	7.5 (190)	2.5 (64)	5.0 (126)	5.0 (128)	3.9 (100)	0.5 (13)	0.3 (7)	11 (5)
	480V	1–5											
FR5	230V	5–7-1/2	16.5 (419)	16.0 (406)	15.3 (389)	8.4 (214)	2.7 (68)	5.8 (148)	5.6 (143)	3.9 (100)	0.5 (13)	0.3 (7)	17.9 (8.1)
	480V	7-1/2–15											
FR6	230V	10–15	22.0 (558)	21.3 (541)	20.4 (519)	9.3 (237)	2.7 (68)	6.7 (171)	7.7 (195)	5.8 (148)	0.7 (18)	0.4 (9)	40.8 (18.5)
	480V	20–30											
	575V	2–25											
FR7	230V	20–30	24.8 (630)	24.2 (614)	23.3 (591)	10.1 (257)	2.7 (68)	7.5 (189)	9.3 (237)	7.5 (190)	0.7 (18)	0.4 (9)	77.2 (35)
	480V	40–60											
	575V	30–40											
FR8	480V	75–125	29.7 (755)	28.8 (732)	28.4 (721)	12.3 (312)	1.3 (34)	11.0 (279)	11.2 (285)	10.0 (255)	0.7 (18)	0.4 (9)	127.8 (58)
	575V	50–75											
FR9	480V	150–200	45.3 (1150)	44.1 (1120)	45.3 (1150)	14.3 (362)	5.4 (137)	8.8 (224)	18.9 (480)	15.7 (400)	0.7 (18)	0.4 (9)	321.9 (146)
	575V	100–150											

Approximate Dimensions in Inches (mm)

NEMA Type 1 and Type 12 with Flange Kit, FR4, FR5, and FR6 Enclosure Dimensions

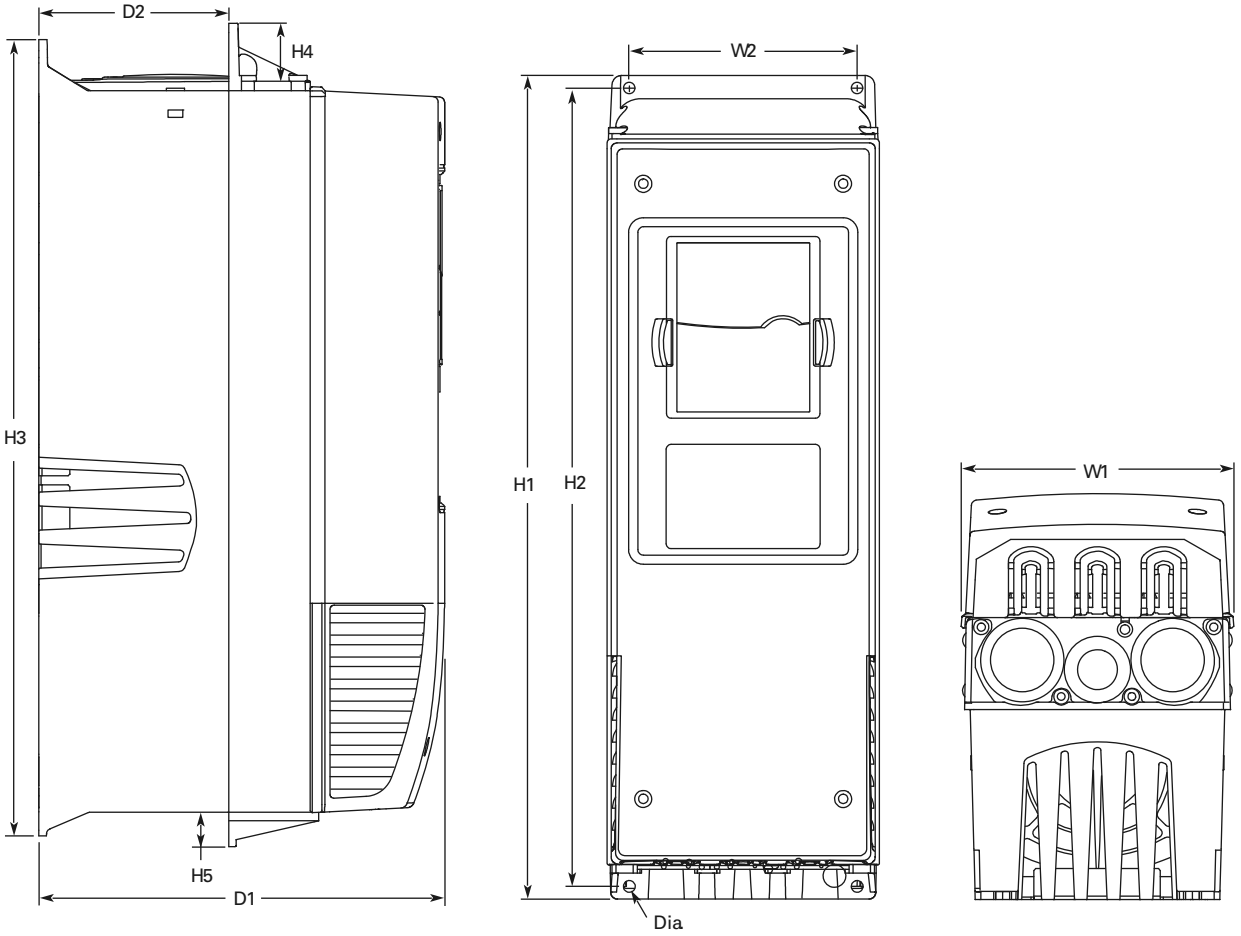

Frame Size	Voltage	W1	W2	H1	H2	H3	H4	H5	D1	D2	Dia.
FR4	230V 480V	5.0 (128)	4.45 (113)	13.27 (337)	12.8 (325)	12.9 (327)	1.18 (30)	0.87 (22)	7.5 (190)	3.0 (77)	0.27 (7)
FR5	230V 480V	5.67 (144)	4.7 (120)	17.0 (434)	16.5 (420)	16.5 (419)	1.4 (36)	0.7 (18)	8.42 (214)	3.93 (100)	0.27 (7)
FR6	230V 480V 575V	7.67 (195)	6.7 (170)	22.0 (560)	21.6 (549)	21.9 (558)	1.18 (30)	0.79 (20)	9.33 (237)	4.17 (106)	0.25 (6.5)

Approximate Dimensions in Inches (mm)

NEMA Type 1 with Flange Kit, FR7, and FR8 Enclosure Dimensions

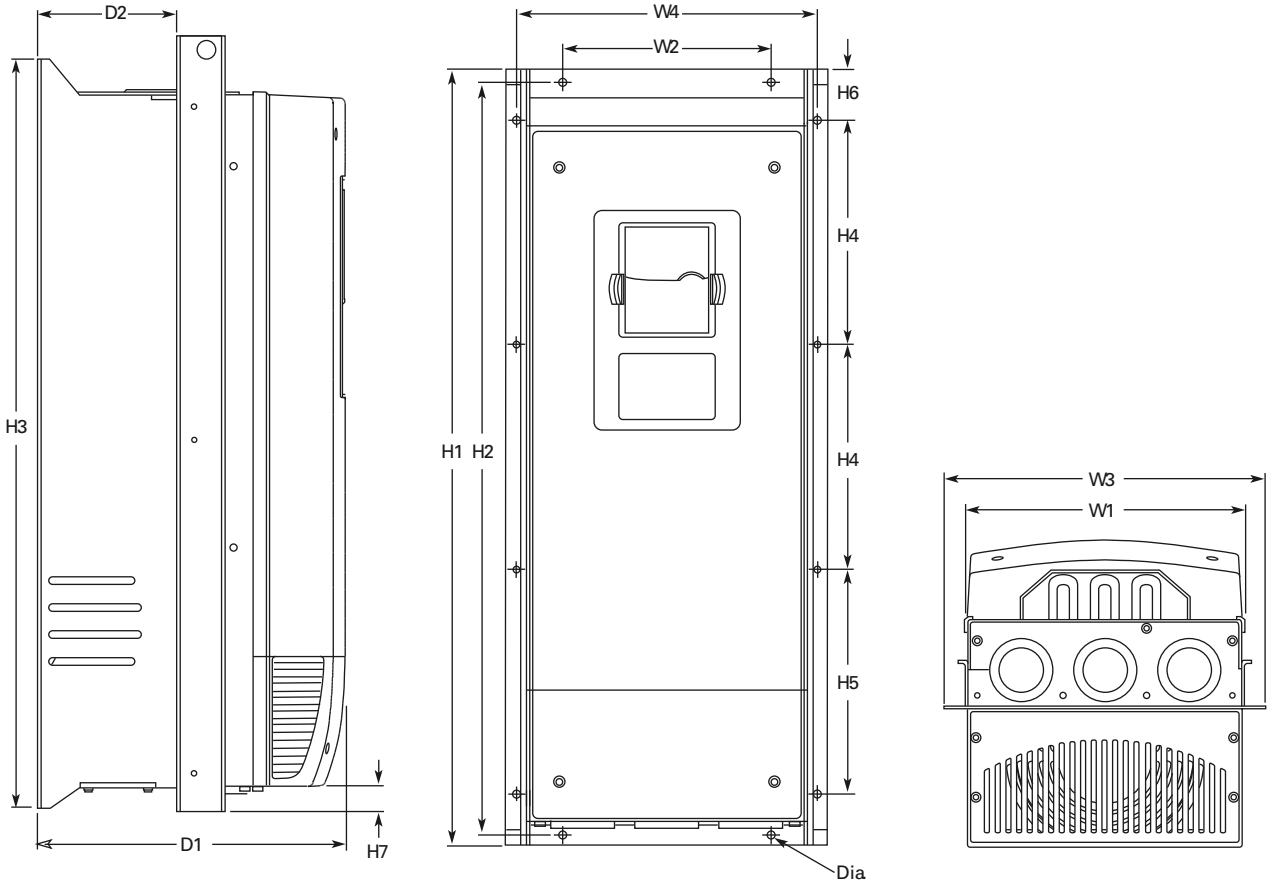

Frame Size	Voltage	W1	W2	W3	W4	H1	H2	H3	H4	H5	H6	H7	D1	D2	Dia.
FR7	230V 480V 575V	9.33 (237)	6.8 (175)	10.62 (270)	10 (253)	25.6 (652)	24.8 (632)	24.8 (630)	7.42 (188.5)	7.42 (188.5)	0.9 (23)	0.78 (20)	10.1 (257)	4.6 (117)	0.25 (5.5)
FR8	480V 575V	11.22 (285)	—	13.97 (355)	13 (330)	32.75 (832)	—	29.33 (745)	10.15 (258)	10.43 (265)	1.7 (43)	2.24 (57)	11.3 (288)	4.33 (110)	0.35 (9)

Approximate Dimensions in Inches (mm)

FR9 Enclosure Dimensions

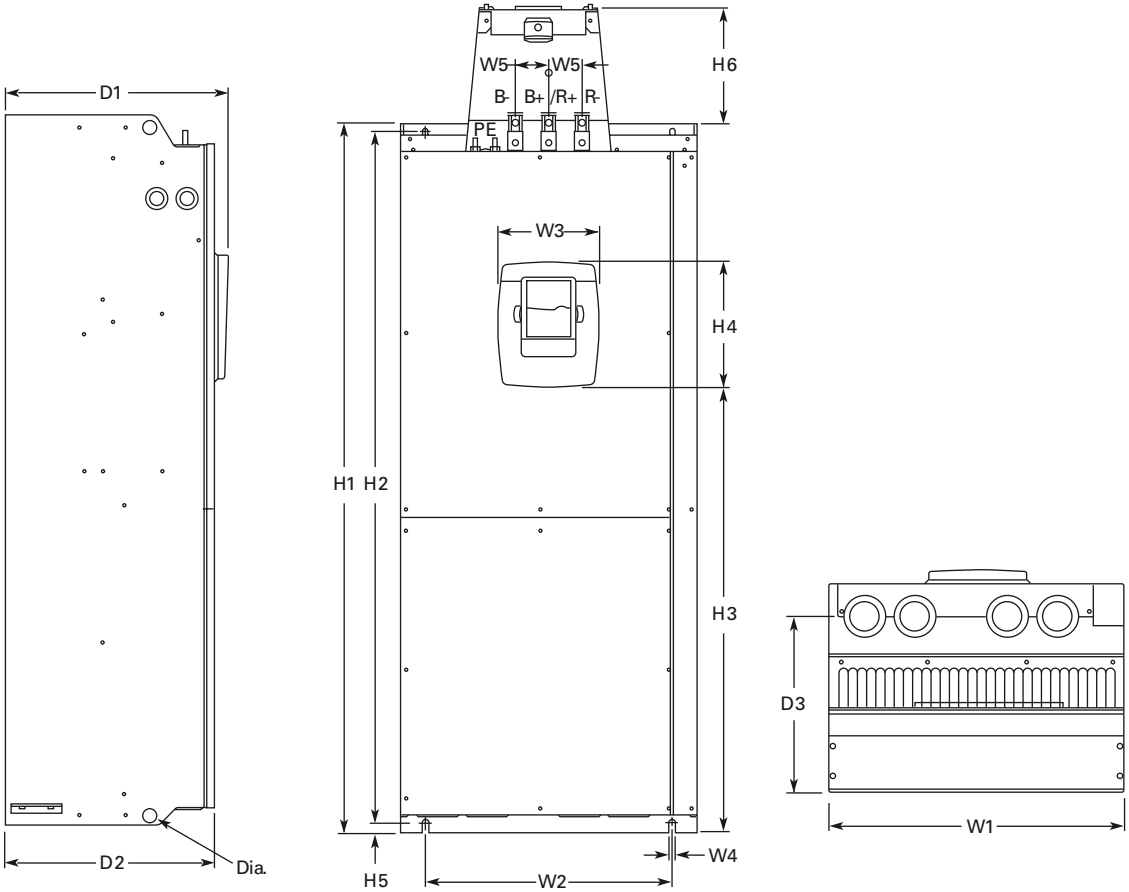

Frame Size	Voltage	W1	W2	W3	W4	W5	H1	H2	H3	H4	H5	H6 ①	D1	D2	D3	Dia.
FR9	480V	18.8	15.75	6.5	0.35	2.12	45.27	44	28.3	8	0.62	7.4	14.25	13.38	11.22	0.82
	575V	(480)	(400)	(165)	(9)	(54)	(1150)	(1120)	(721)	(205)	(16)	(188)	(362)	(340)	(285)	(21)

Note

① Brake resistor terminal box (H6) included when brake chopper ordered.

Approximate Dimensions in Inches (mm)

FR9 with Flange Kit Enclosure Dimensions

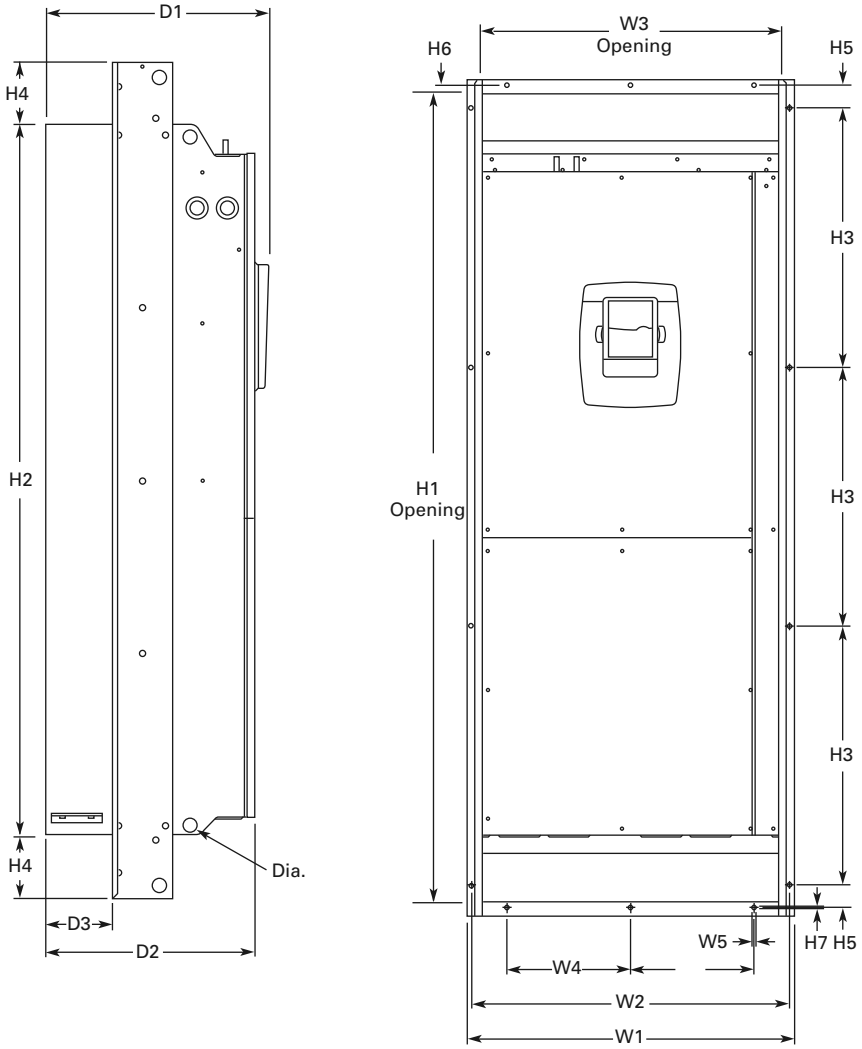

Frame Size	Voltage	W1	W2	W3	W4	W5	H1	H2	H3	H4	H5	H6	H7	D1	D2	D3	Dia.
FR9	480V 575V	20.9 (530)	20 (510)	19.1 (485)	7.9 (200)	0.22 (5.5)	51.7 (1312)	45.3 (1150)	16.5 (420)	3.9 (100)	1.4 (35)	0.35 (9)	0.08 (2)	24.9 (362)	13.4 (340)	4.3 (109)	0.8 (21)

Approximate Dimensions in Inches (mm)

Power Unit—SPX9000 FR10–FR14

SPX9000, FR10 Open Chassis

Note: SPX9000 FR12 is built of two FR10 modules.

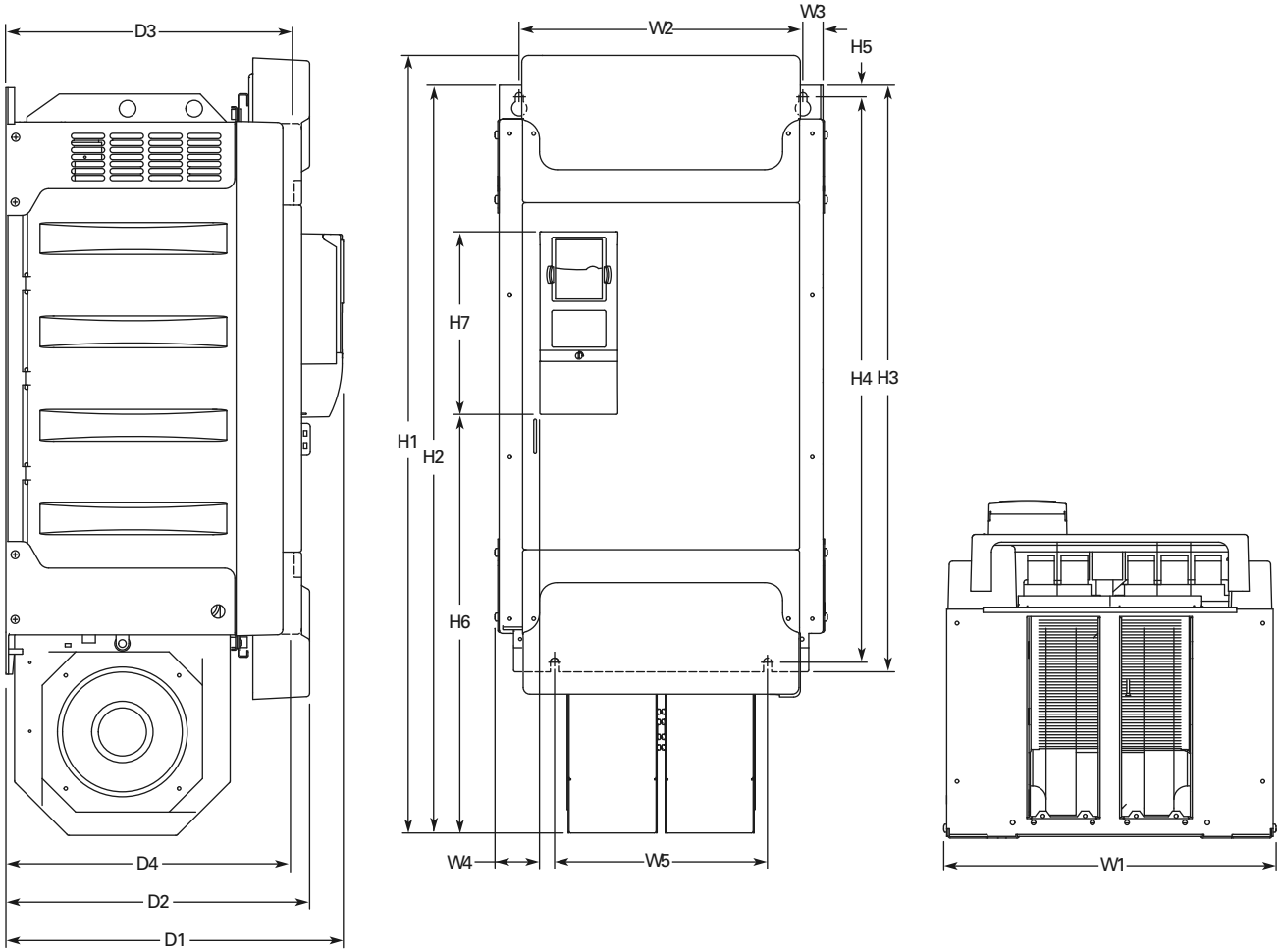

Frame Size	Voltage	hp (I_H)	W1	W2	W3	W4	W5	H1	H2	H3	H4
FR10	480V	250–350	19.7 (500)	16.7 (425)	1.2 (30)	2.6 (67)	12.8 (325)	45.9 (1165)	44.1 (1121)	34.6 (879)	33.5 (850)
	575V	200–300									

Frame Size	Voltage	hp (I_H)	H5	H6	H7	D1	D2	D3	D4	Weight Lbs (kg)
FR10	480V	250–350	0.7 (17)	24.7 (627)	10.8 (275)	19.9 (506)	17.9 (455)	16.7 (423)	16.6 (421)	518 (235)
	575V	200–300								

Approximate Dimensions in Inches (mm)

SPX9000, FR11 Open Chassis

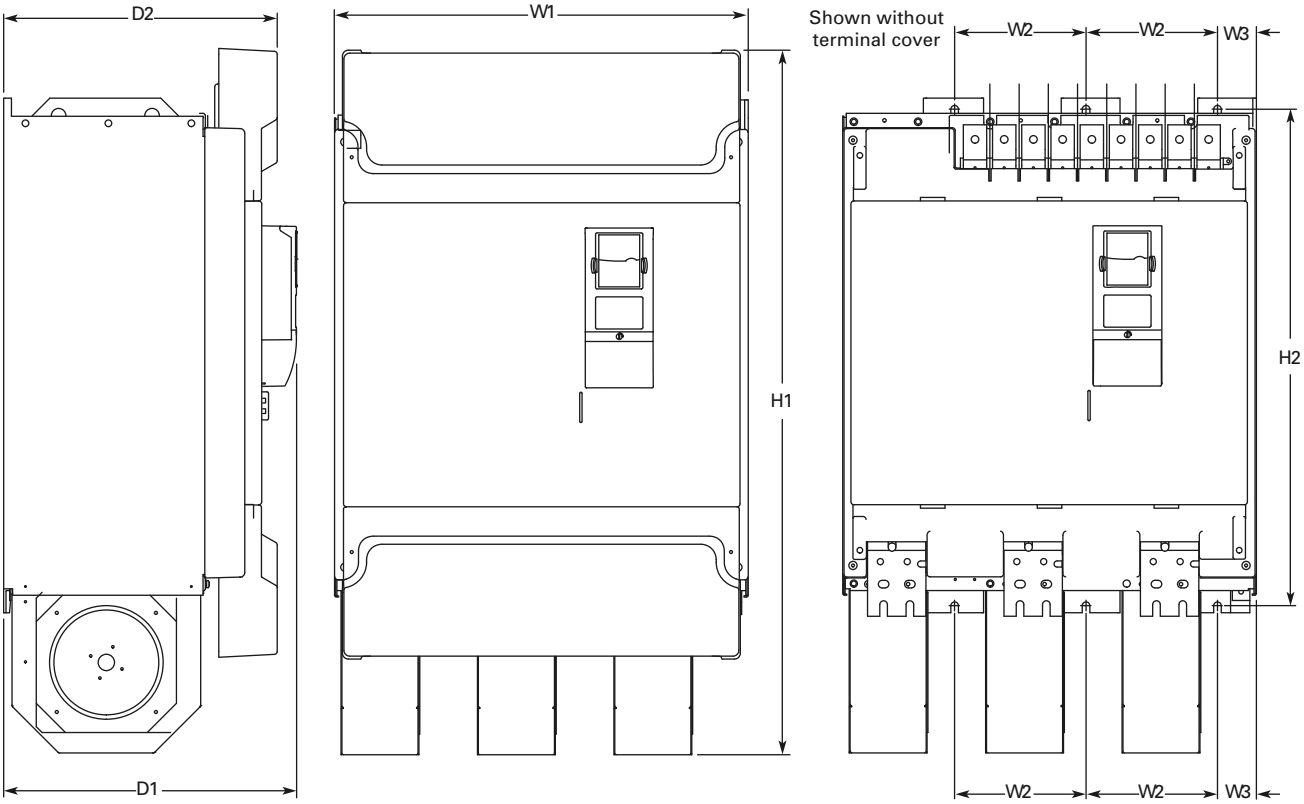

Frame Size	Voltage	hp (I_H)	W1	W2	W3	H1	H2	D1	D2	Weight Lbs (kg)
FR11	480V	400–550	27.9 (709)	8.6 (225)	2.6 (67)	45.5 (1155)	33.5 (850)	19.8 (503)	18.4 (468)	833 (378)
	575V	400–500								

Approximate Dimensions in Inches (mm)

SPX9000, FR13 Open Chassis Inverter

Note: 9000X FR14 is built of two FR13 modules.
FR13 is built from an inverter module and a converter module.

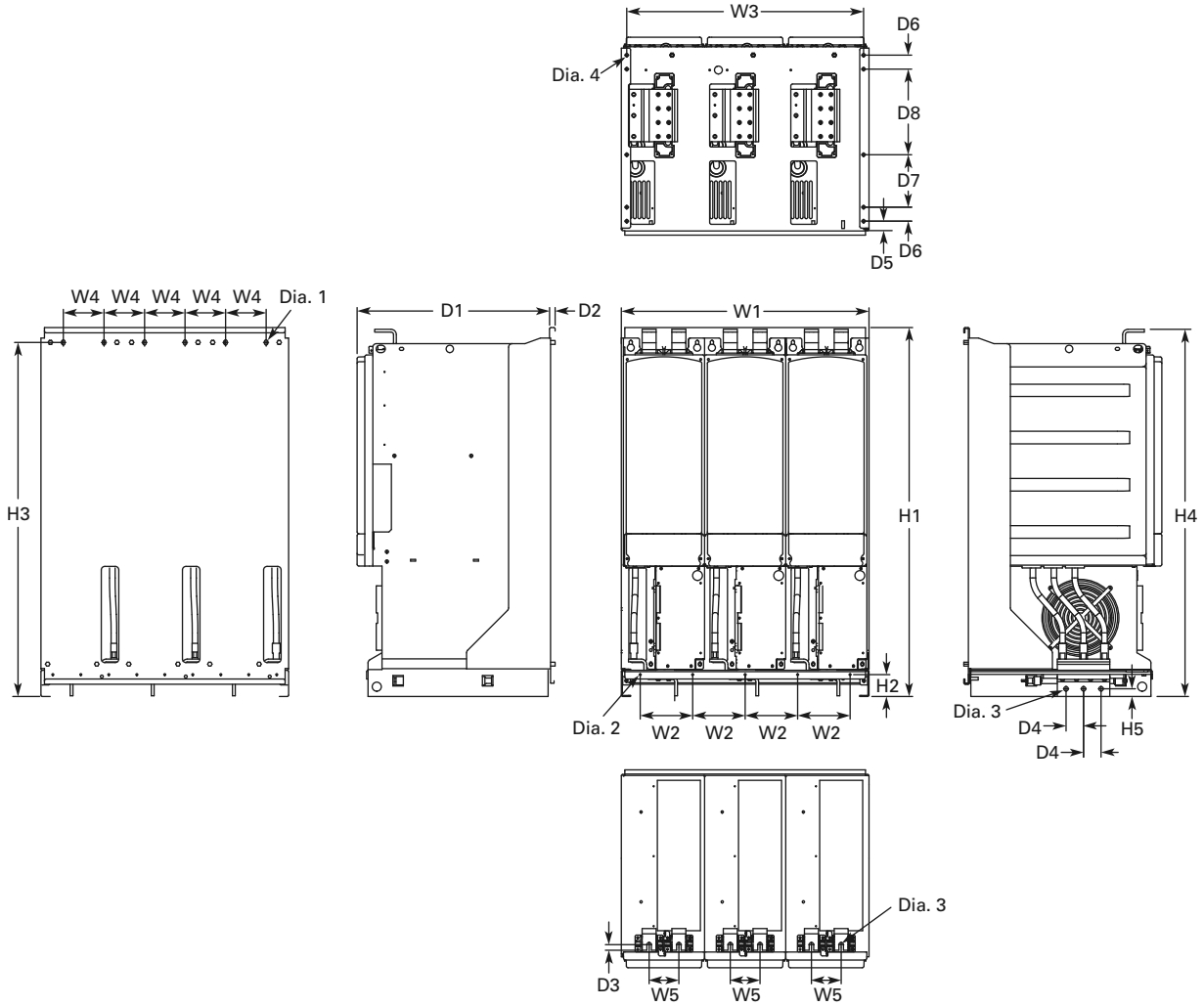

Frame Size	W1	W2	W3	W4	W5	H1	H2	H3	H4	H5
FR13	27.87 (708)	5.91 (150)	26.65 (677)	4.57 (116)	3.35 (85)	41.54 (1055)	2.46 (62.5)	39.86 (1012.5)	41.34 (1050)	0.79 (20)

Frame Size	D1	D2	D3	D4	D5	D6	D7	D8	Dia. 1	Dia. 2	Dia. 3	Dia. 4	Weight Lbs (kg)
FR13	21.77 (553)	0.51 (13)	0.63 (16)	1.97 (50)	1.06 (27)	1.57 (40)	5.91 (150)	9.64 (244.8)	0.35 x 0.59 (9x15)	0.18 (4.6)	0.51 (13)	0.37 (9.5)	683 (310)

Approximate Dimensions in Inches (mm)

SPX9000, FR13 Open Chassis Converter

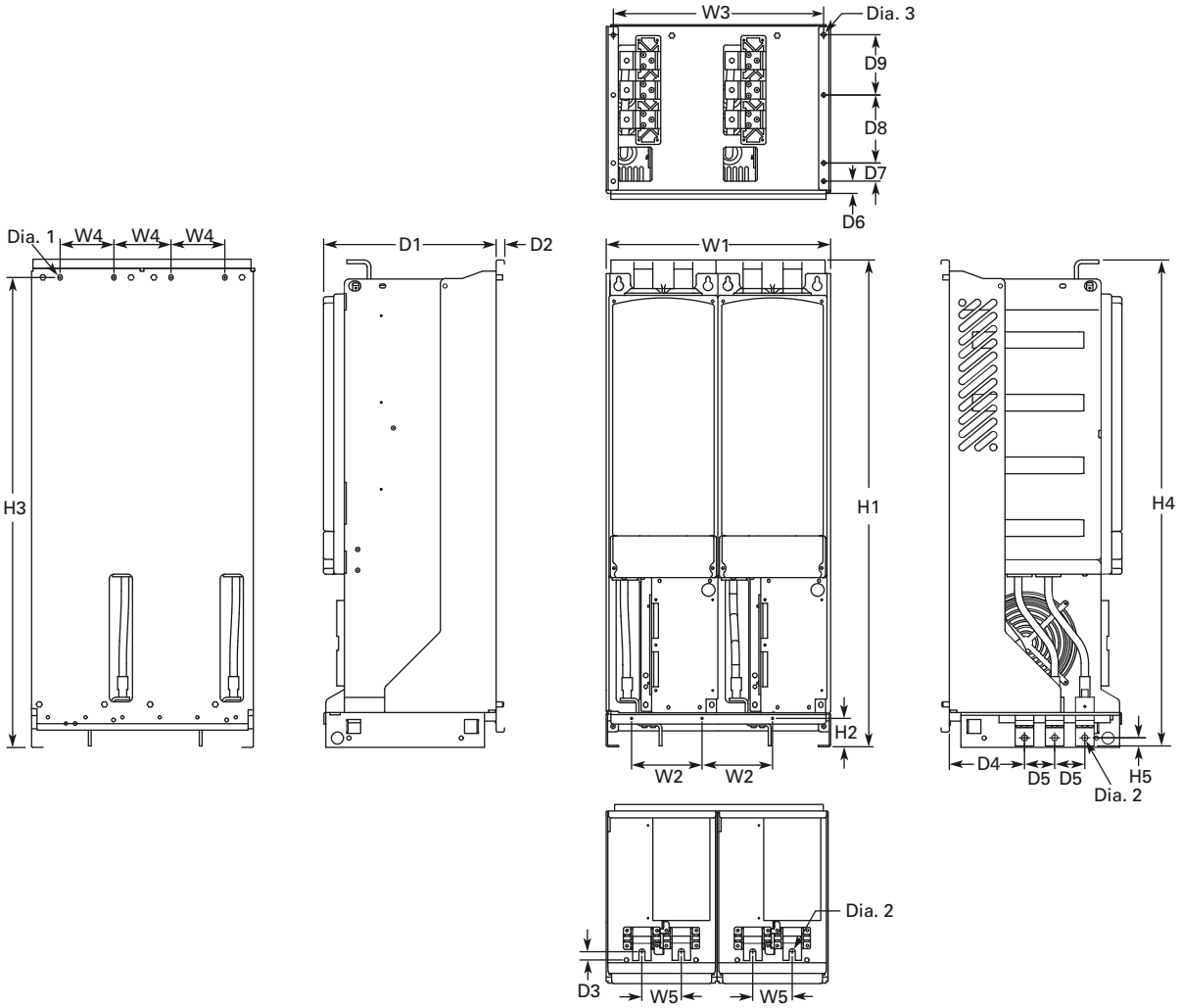

Frame Size	W1	W2	W3	W4	W5	H1	H2	H3	H4	H5
FR13	18.74 (476)	5.91 (150)	17.52 (445)	4.57 (116)	3.35 (85)	41.54 (1055)	2.46 (62.5)	39.86 (1012.5)	41.34 (1050)	0.69 (17.5)

Frame Size	D1	D2	D3	D4	D5	D6	D7	D8	D9	Dia. 1	Dia. 2	Dia. 3	Weight Lbs (kg)
FR13	14.69 (373)	.51 (13)	0.73 (18.5)	6.42 (163)	2.56 (65)	1.06 (27)	1.57 (40)	5.91 (150)	5.24 (133)	0.35 x 0.59 (9 x 15)	0.51 (13)	0.37 (9.5)	295 (134)

FR13—Number of Input Units

480V	hp	Input Modules
SPX800A0-4A2N1	800	2

690V	hp	Input Modules
SPX800A0-5A2N1	800	2
SPX900A0-5A2N1	900	2
SPXH10A0-5A2N1	1000	2

Approximate Dimensions in Inches (mm)

SPX9000, FR13 Open Chassis Converter—900/1000 hp 480V

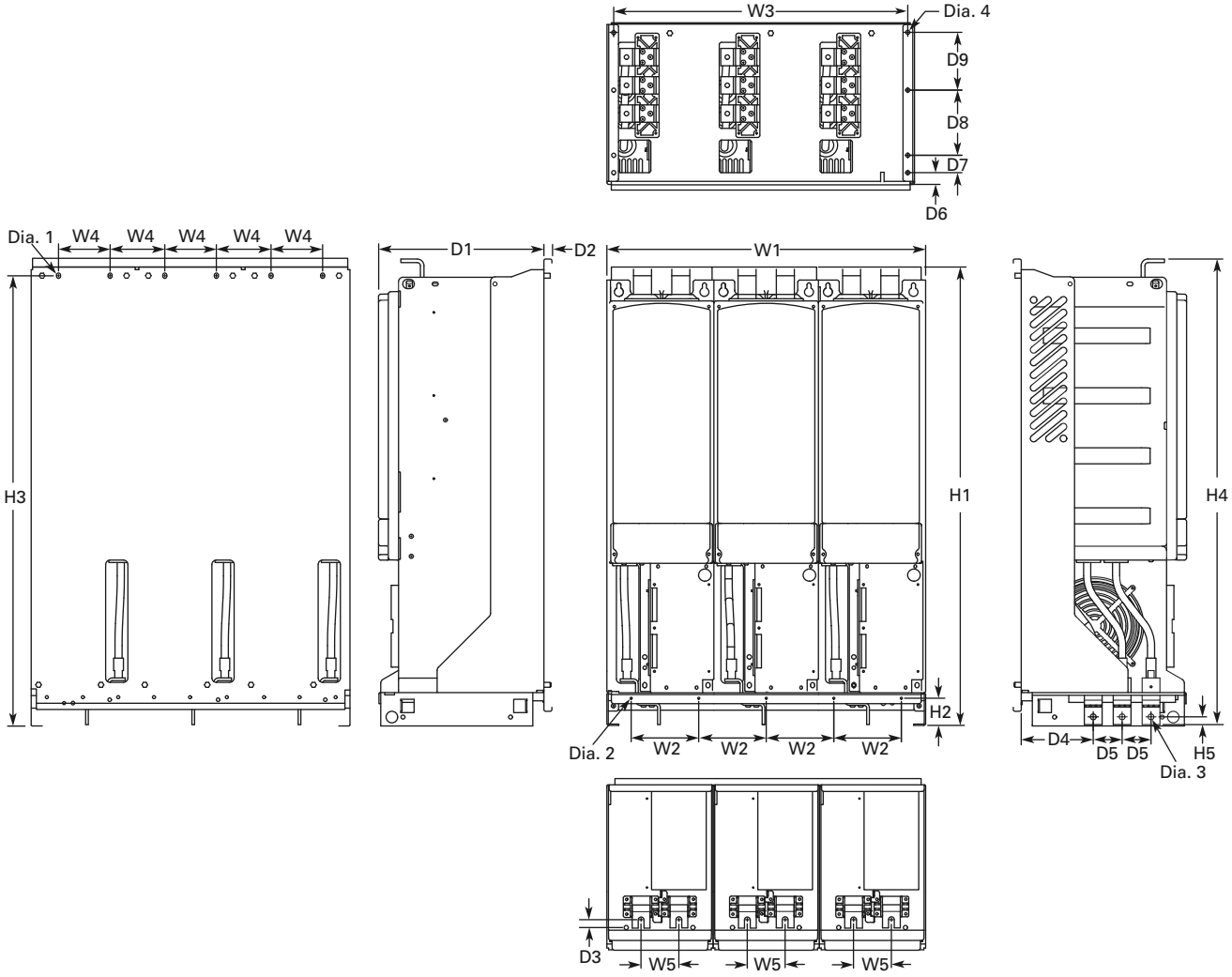

Frame Size	W1	W2	W3	W4	W5	H1	H2	H3	H4	H5	D1	D2
FR13	27.87 (708)	5.91 (150)	26.65 (677)	4.57 (116)	3.35 (85)	41.54 (1055)	2.46 (62.5)	39.86 (1012.5)	41.34 (1050)	0.69 (17.5)	14.69 (373)	0.51 (13)

Frame Size	D3	D4	D5	D6	D7	D8	D9	Dia. 1	Dia. 2	Dia. 3	Dia. 4	Weight Lbs (kg)
FR13	0.73 (18.5)	6.42 (163)	2.56 (65)	1.06 (27)	1.57 (40)	5.91 (150)	5.24 (133)	0.35 x 0.59 (9 x 15)	0.18 (4.6)	0.51 (13)	0.37 (9.5)	443 (201)

FR13—Number of Input Units

480V	hp	Input Modules
SPX900A0-4A2N1	900	3
SPXH10A0-4A2N1	1000	3

Approximate Dimensions in Inches (mm)

AC Choke—CHK0650

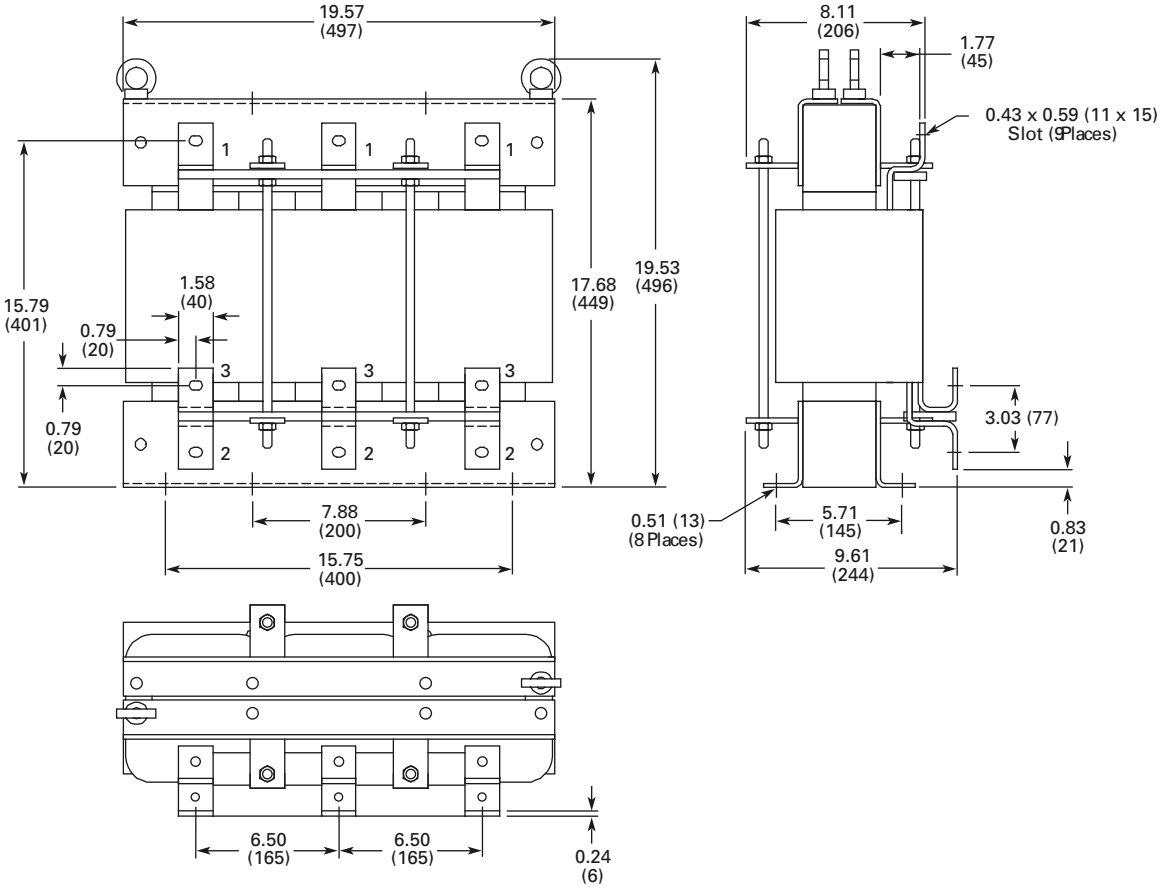

Approximate Dimensions in Inches (mm)

AC Choke—CHK0520

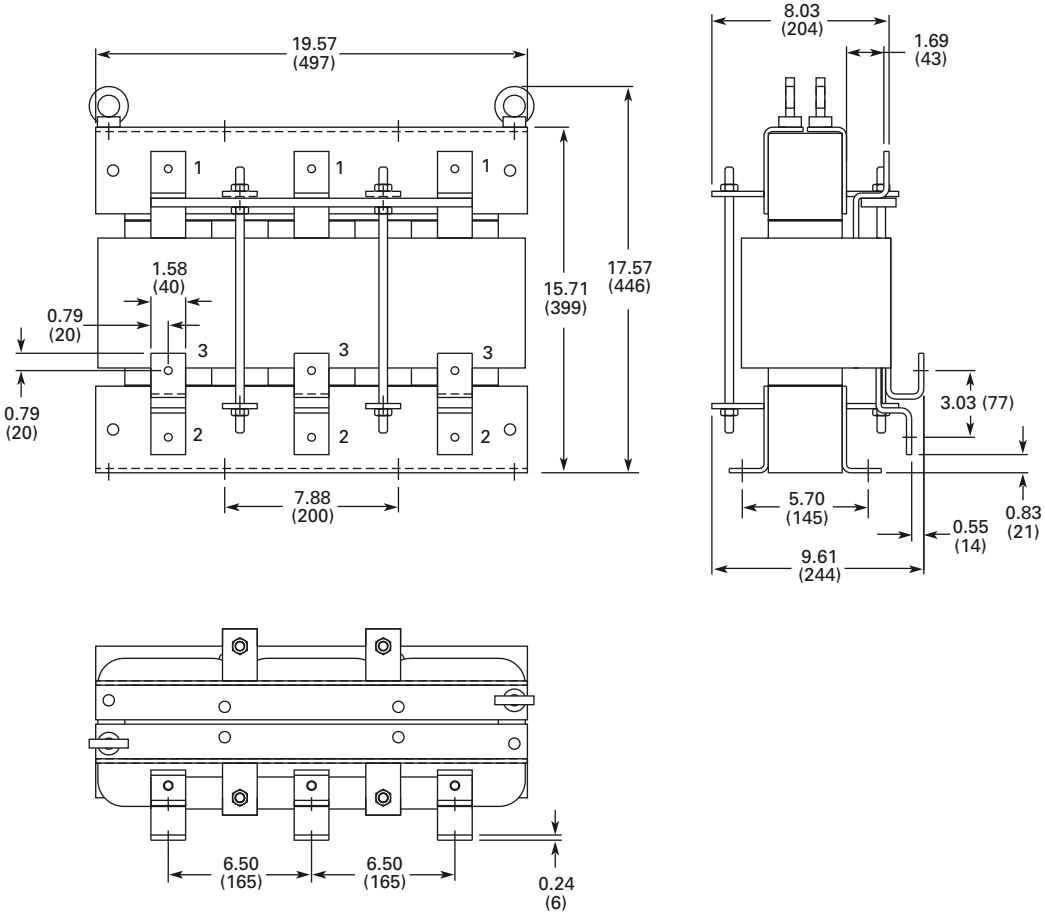

Approximate Dimensions in Inches (mm)

AC Choke—CHK0400

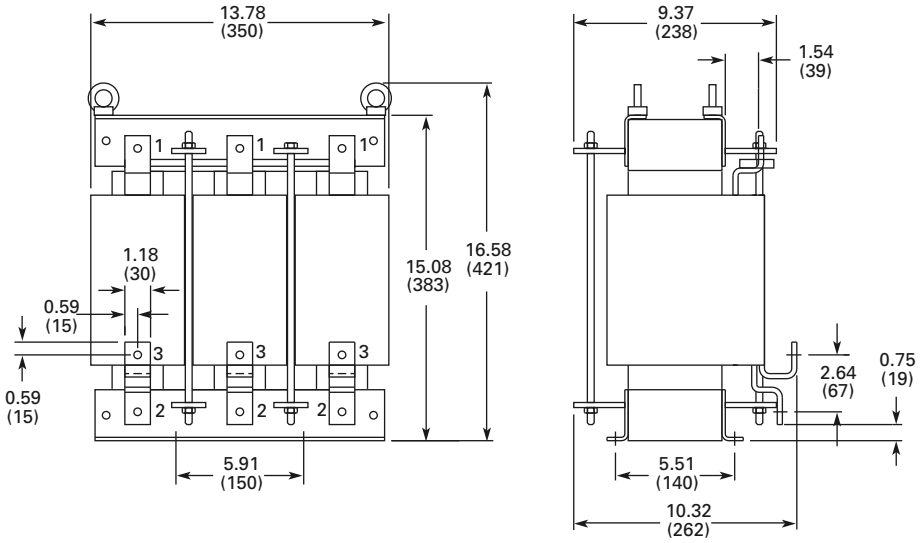

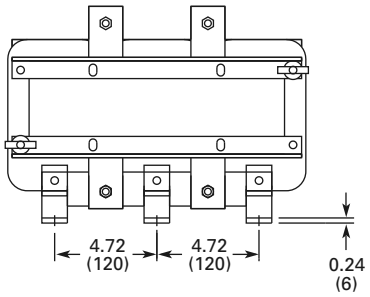

Approximate Dimensions in Inches (mm)

AC Choke—CHK0261

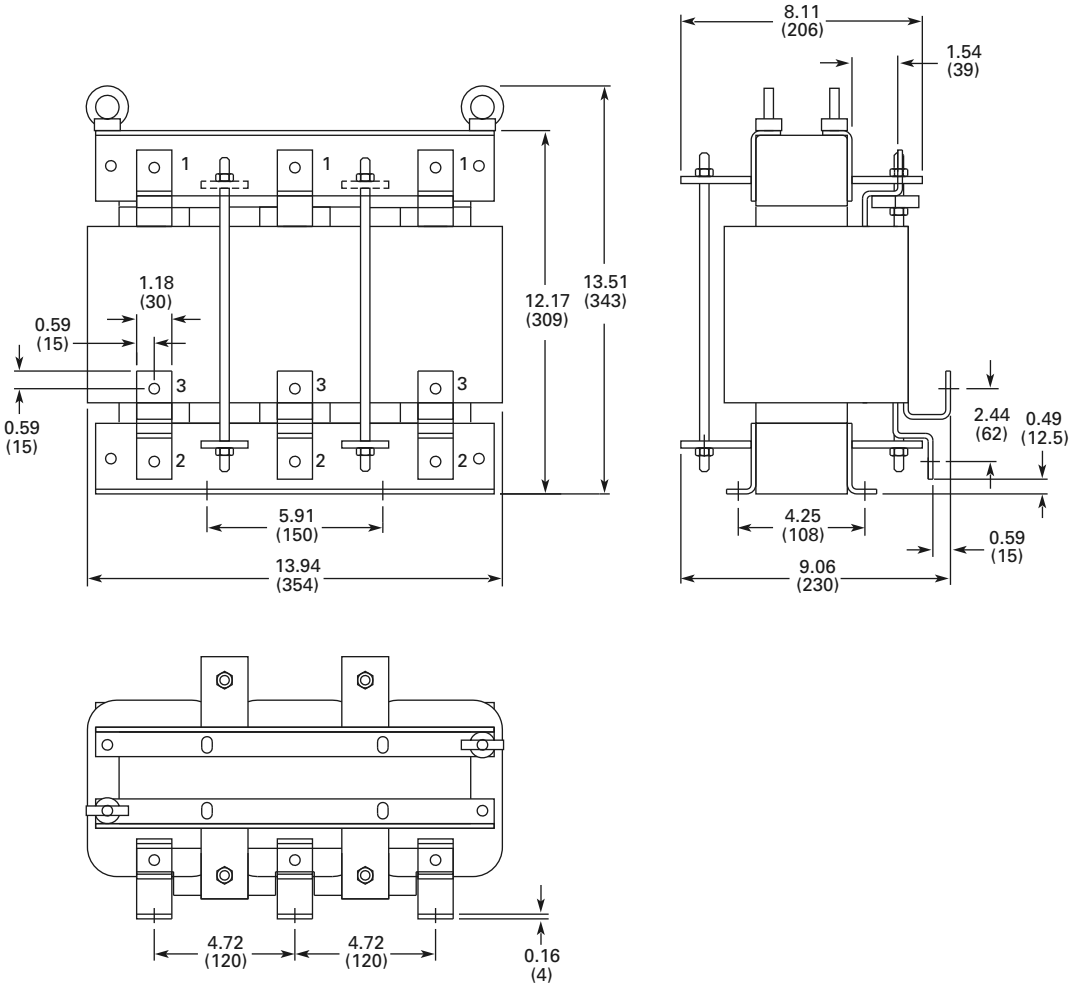

Approximate Dimensions in Inches (mm)

Control Unit—SPX9000 FR10–FR14

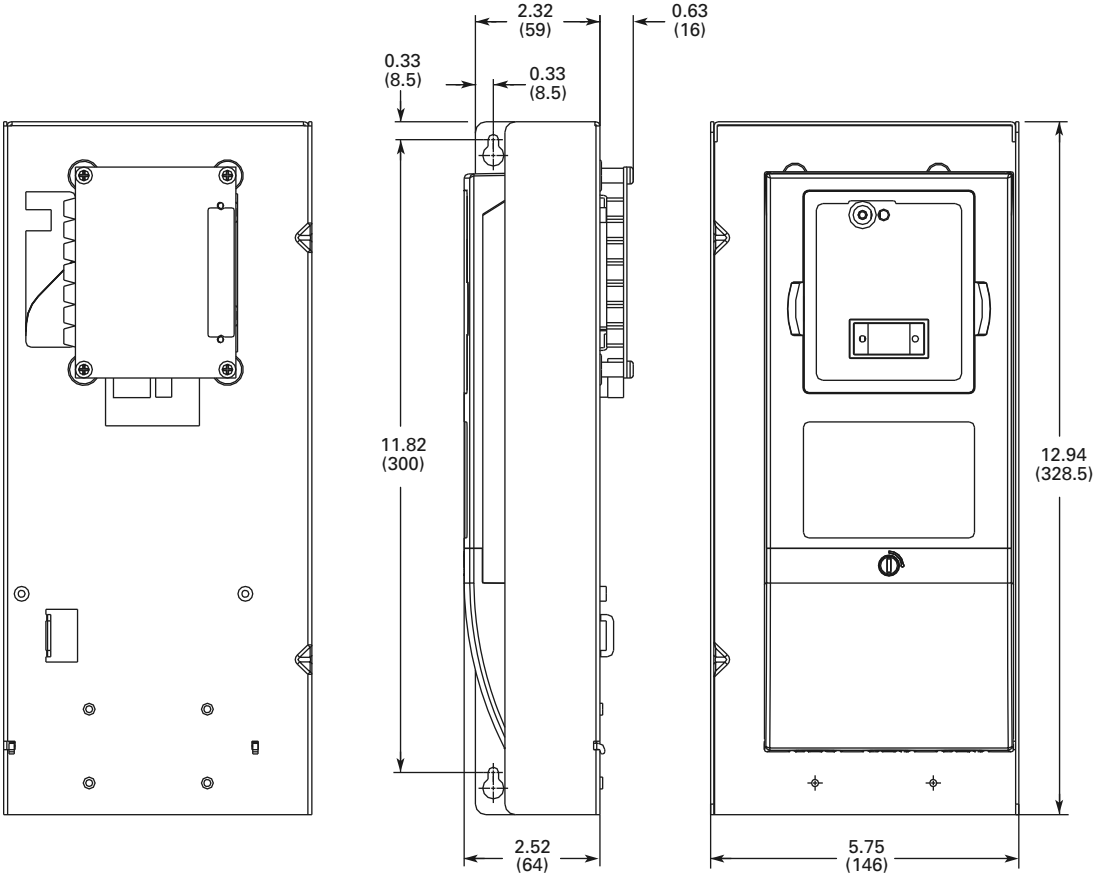

Approximate Dimensions in Inches (mm)

Control Unit with Star-Coupler Board, FR12 or FR14 Only

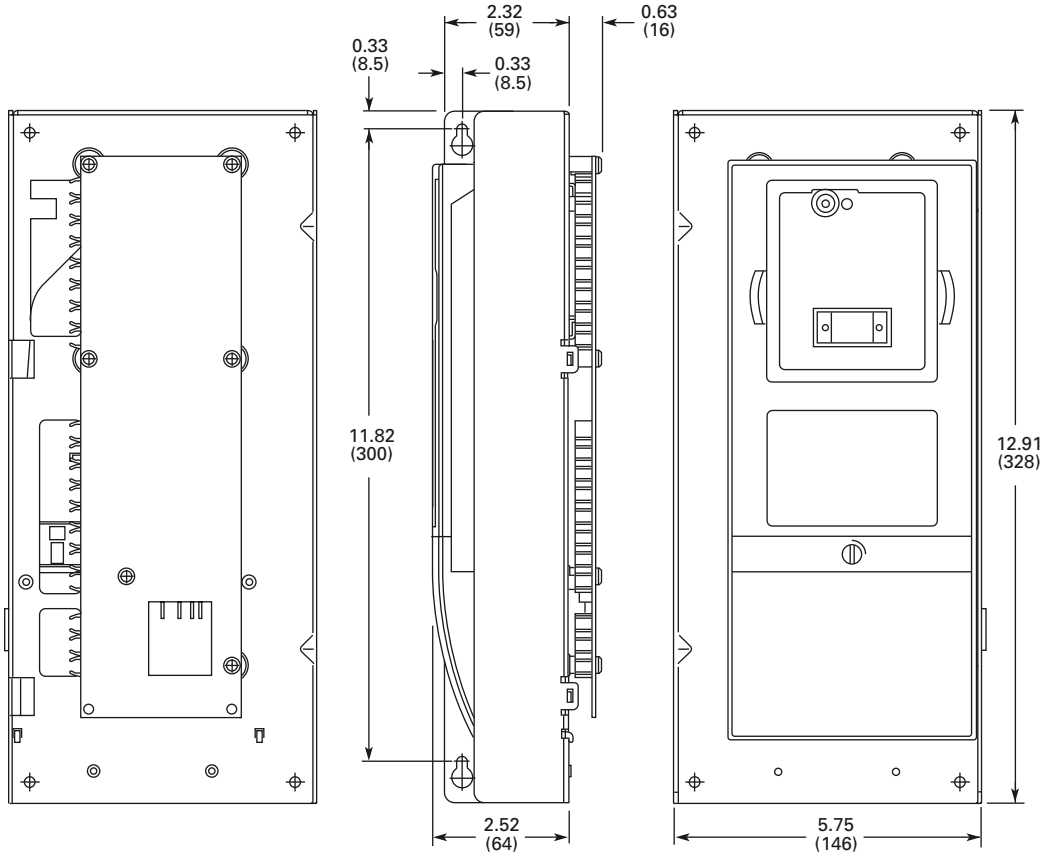

EMC Capability

General

For products used within the European Community (EC), the Electro Magnetic Compatibility (EMC) directive states that the electrical equipment must not disturb the environment and must be immune to other Electro Magnetic Disturbances in the environment.

The design intent was to develop a family of drives that is user friendly and cost-effective, while fulfilling the user's needs. EMC compliance was a major consideration from the outset of the design.

The SVX9000/SPX9000 drive series is targeted for the world market. To ensure maximum flexibility, yet meet the EMC needs of different regions, all drives meet the highest immunity levels, while emission levels meet the requirements noted in the following section.

EMC Classification

The SVX9000/SPX9000 drive series are EMC classification H capable.

Class H

SVX9000/SPX9000 drives have been designed to fulfill the requirements of the product standard EN 61800-3+A11 for the 1st environment restricted distribution and the 2nd environment.

The emission levels correspond to the requirements of EN 61000-6-4.

SVX9000/SPX9000 series drives fulfill all applicable EMC immunity requirements (standards EN 61000-6-1, EN 61000-6-2, and EN 61800-3+A11).

Declaration of Conformity

The Manufacturer's Declarations of Conformity ensuring the compliance of the SVX9000/SPX9000 drives with the European Community (EC) EMC directives is available upon request.

Warranty and Liability Information

Eaton Electrical Inc. warrants the product delivered in the Eaton shipping package to be free from defects in material and workmanship, under normal use and service, for twenty four (24) months from date of manufacturing. Products that fail during this period will be repaired or replaced at Eaton's discretion, with the same or a functionally equivalent product, provided the original purchaser (A) returns the failed product, and (B) provides proof of original date of purchase. This warranty does not apply, in the judgment of Eaton, to damage caused during shipment, handling, storage, or accidental misuse. The original purchaser of the product must obtain a Eaton Return Material Authorization (RMA) number prior to returning any defective product. (When purchased through an Authorized Distributor, the Distributor should supply an RMA number to their customer.)

The maximum liability of this warranty is limited to the purchase price of the product. In no event, regardless of cause, shall Eaton Electrical Inc. be liable (a) for penalties or penalty clauses of any description, or (b) for certification not otherwise specifically provided herein and/or indemnification of purchaser or others for costs, damages or expenses, each arising out of or related to the product or services of any order or (c) for any damages resulting from loss of profits, use of products or for any incidental indirect or consequential damages, even if advised of the possibility of such damages.

Fault and Warning Codes

In the SVX9000/SPX9000 drive there are four different types or "Levels" of faults, each level corresponding to the severity of the fault. The fault types differ from each other on the basis of the drive response to the fault. See Fault Codes table below and on **Pages 82** and **83** for descriptions.

The faults with one asterisk are "Fault" only. The faults with two asterisks can be programmed for different actions based on the chosen application. See the appropriate application manual for specific application details.

Fault Type Categories

Fault Type	Fault Level/Significance
First Level Fault	A minor fault
(* next to fault numbers)	A First Level Fault indicates an unusual operating condition has occurred. It does not cause the drive to stop, and it does not require any action to be taken. The fault indication remains in the display for about 30 seconds.
Second Level Fault	A significant fault
(** next to fault numbers)	The drive response to a Second Level Fault can be programmed in the application. A Second Level Fault will cause the drive to stop. Corrective action needs to be taken in order to restart the drive.
Third Level Fault	A major fault
(auto resetting)	If a Third Level Fault occurs the drive will also stop immediately. The fault is reset automatically and the drive will try to restart the motor. Finally, if the restart is not successful, a Top Level Fault trip occurs (see below).
Top Level Fault	A final fault
	If the drive is unable to restart the motor after a Third Level Fault, a Top Level Fault occurs. The effect of the Top Level Fault is the same as that of the Second Level Fault except that the drive is stopped and remains stopped until corrective is taken and the drive is reset.

Fault Codes

Fault Code	Fault	Possible Cause	Solution
1	Overcurrent	The SVX9000/SPX9000 has detected a high current (>4 x I_n) in its output due to: • sudden heavy load increase • short in the motor • short in the cables to the motor • unsuitable motor	Check loading Check motor Check cables
2	Overvoltage	The DC link voltage has exceeded its high limit due to: • too short a deceleration time • high voltage levels or surges in the utility supply	Make the deceleration time longer Use a chopper and brake resistor (standard on some models, available as an option on others) Correct utility supply voltage (level is too high) Add input impedance to limit surges
3**	Ground (earth) fault	Current sensing indicates that the sum of motor phase currents is not zero • insulation failure in motor or motor cables	Check the motor and motor cables
5	Charging switch	The charging switch was open when the START command was been given due to: • faulty operation • component failure	Reset the fault and restart. Should the fault reoccur, contact your Eaton distributor
6	Emergency stop	An Emergency stop signal was received from one of the digital inputs	Determine the reason for the Emergency stop and remedy it

Fault Codes, continued

Fault Code	Fault	Possible Cause	Solution
7	Saturation trip	Defective component Motor or motor cable short	Cannot be reset from the keypad Switch off power If this fault appears simultaneously with Fault 1, check the motor and motor cables IF THE PROBLEM IS NOT IN THE MOTOR OR ITS CABLES, DO NOT RECONNECT POWER! Contact your Eaton distributor
8	System fault	Component failure Faulty operation Exceptional fault data record, see the Active Fault Menu and Fault Time Data Record for more information	Reset the fault and restart Should the fault reoccur, contact your Eaton distributor
9**	Undervoltage	DC link voltage is less than the minimum safe operating voltage limit • most probable cause: supply voltage too low • SVX9000/SPX9000 internal fault	If there was a supply voltage loss or dip, reset the fault and restart the SVX9000/SPX9000. Check the supply voltage. If it was within specification at the time of the fault, an internal failure has occurred Contact your Eaton distributor
10**	Input line supervision	Input line phase is low or missing	Check the utility supply voltage, cables, and connections
11**	Output phase supervision	Current sensing indicates that there is no current in one motor phase	Check the motor cables, connections, and motor
12	Brake chopper supervision	No brake resistor installed Brake resistor is open Brake chopper failure	Check the brake resistor If the resistor is ok, the chopper is faulty. Contact your Eaton distributor
13	SVX9000/SPX9000 undertemperature	Heatsink temperature is under 14°F (–10°C)	Provide supplemental heating or relocate the SVX9000/SPX9000 to a warmer location
14	SVX9000/SPX9000 overtemperature	Heatsink temperature is over 194°F (90°C)	An overtemperature warning is issued when the heatsink temperature exceeds 185°F (85°C), a fault occurs at 194°F (90°C). Check for the correct amount and unrestricted flow of cooling air Check the heatsink for dust or dirt buildup Check the highest ambient temperature level Make sure that the switching frequency is not set too high in relation to ambient temperature and motor load
15**	Motor stalled	Motor or load mechanical failure Load is too high Stall parameter settings incorrect	Check motor, mechanical system, and load level Confirm the stall parameter settings
16**	Motor overtemperature	Motor is overloaded Motor overheating has been detected by the SVX9000/SPX9000 motor temperature model	Decrease the motor load If no motor overload exists, check the temperature model parameters
17**	Motor underload	Mechanical or load problems Underload parameter settings incorrect	Check the motor. Check for a loose belt, broken coupling or load problems. Confirm the underload parameter settings
22	EEPROM checksum fault	Parameter save fault due to: • faulty operation • component failure	Upon reset of this fault, the SVX9000/SPX9000 will automatically reload the parameter default settings. Check all parameter settings after reset. If the fault reoccurs, contact your Eaton distributor
24*	Counter fault	Values displayed on the counters are incorrect	—
25	Microprocessor watchdog fault	Faulty operation Component failure	Reset the fault and restart Should the fault reoccur, contact your Eaton distributor
26	Startup prevented	Startup of the drive has been prevented	Check Start Enable/Interlock settings

Fault Codes, continued

Fault Code	Fault	Possible Cause	Solution
29**	Thermistor fault	The thermistor input of an option board has detected a high motor temperature	Check the motor cooling and the motor loading Check the thermistor connection (If the thermistor input of an option board is not being used, it must be short-circuited)
31	IGBT temperature (hardware)	IGBT inverter bridge overtemperature protection has detected a high short-term overload current	Check loading Check motor size
32	Fan cooling	The SVX9000/SPX9000 cooling fan did not start when commanded	Contact your Eaton distributor
34	CAN bus communication	Sent message not acknowledged	Ensure that there is another device on the bus with the appropriate configuration
36	Control unit	The control unit cannot control the power unit and vice-versa	Change the control unit
37*	Device change (same type)	Option board changed Different power rating of drive	Reset No Fault Time Data Record is made
38*	Device added (same type)	Option board added Drive of different power rating added	Reset No Fault Time Data Record is made
39*	Device removed	Option board removed Drive removed	Reset No Fault Time Data Record is made
40	Device unknown	Unknown option board or drive	Contact your Eaton distributor
41	IGBT temperature	IGBT inverter bridge overtemperature protection has detected a high short-term overload current	Check loading Check motor size
42**	Brake resistor overtemperature	Brake resistor overtemperature protection has detected excessive braking	Set the deceleration time longer Use an external brake resistor
43	Encoder fault	Exceptional fault data record, see the Active Fault Menu and Fault Time Data Record for more information. Additional codes: 1 = Encoder 1 channel A is missing 2 = Encoder 1 channel B is missing 3 = Both encoder 1 channels are missing 4 = Encoder reversed	Check encoder channel connections Check the encoder board
44*	Device change (different type)	Option board changed Different power rating of drive	Reset No Fault Time Data Record is made Application parameter values restored to default
45*	Device added (different type)	Option board added Drive of different power rating added	Reset No Fault Time Data Record is made Application parameter values restored to default
50**	Analog input I_{in} <4 mA (for the signal range 4 to 20 mA)	Current at the analog input is <4 mA Control cable is broken or loose Signal source has failed	Check the current loop, signal source, and wiring
51	External fault	Digital input set as an external fault input has been triggered	Check source of trigger
52	Keypad communication fault	The connection between the control keypad and the SVX9000/SPX9000 has been lost	Check the keypad connection and keypad cable
53	Communication bus fault	The data connection between the communication bus master and the communication bus board has failed	Check installation If installation is correct contact your Eaton distributor
54	Slot fault	Defective option board or slot	Check that the board is properly installed and seated in slot. If the installation is correct, contact your Eaton distributor
56	PT100 board temperature fault	Temperature limit values set for the PT100 board parameters have been exceeded	Determine the cause of the high temperature

Troubleshooting Charts Using Fault Codes

Using Fault Codes

F1—Overcurrent

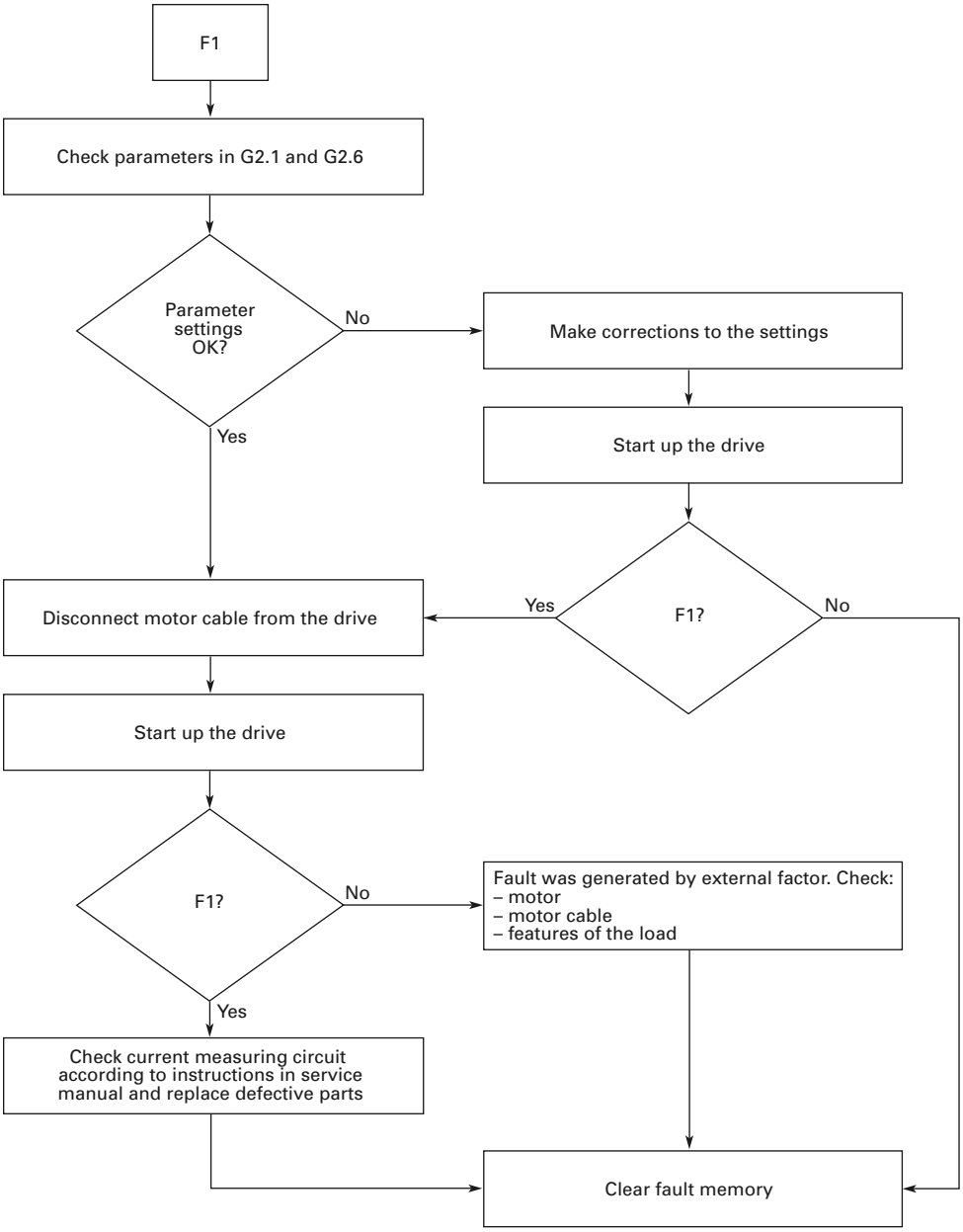

F2—Overvoltage

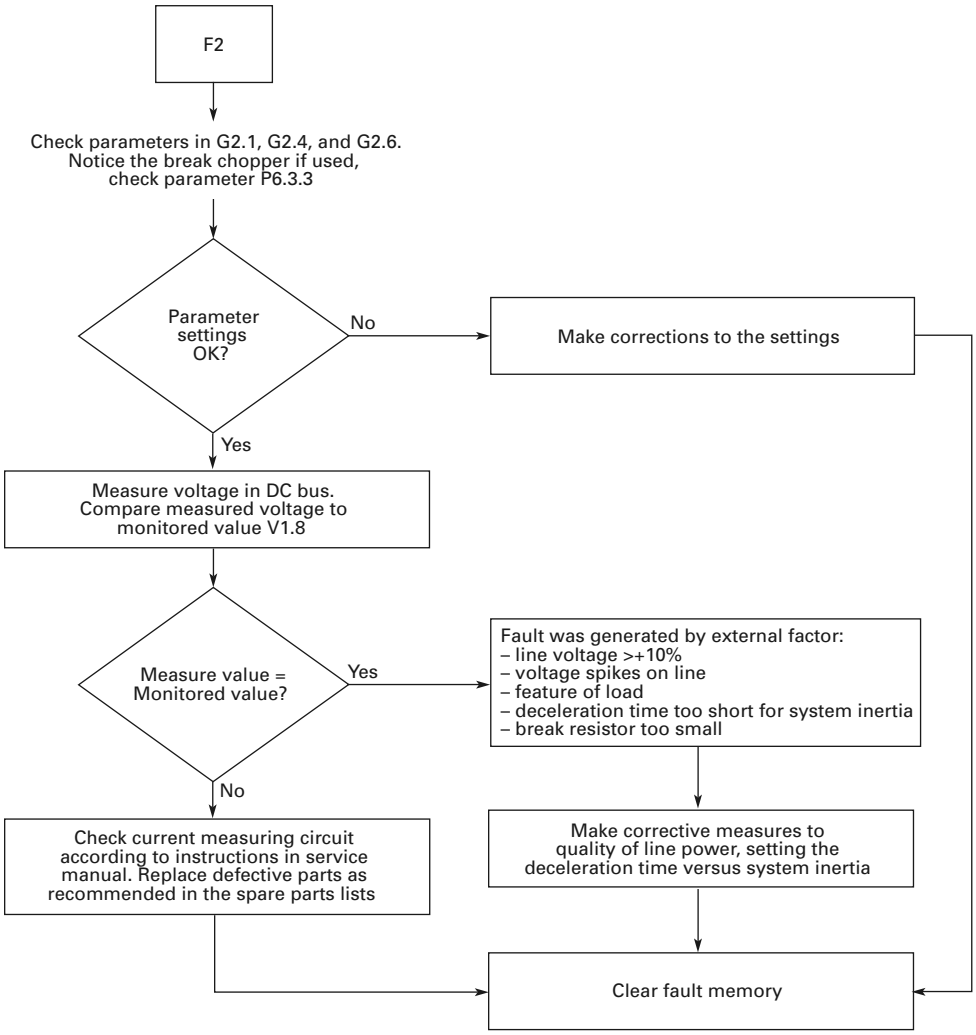

Note: Overvoltage trip limit is 911V in 380-500V units

F3—Earth Fault

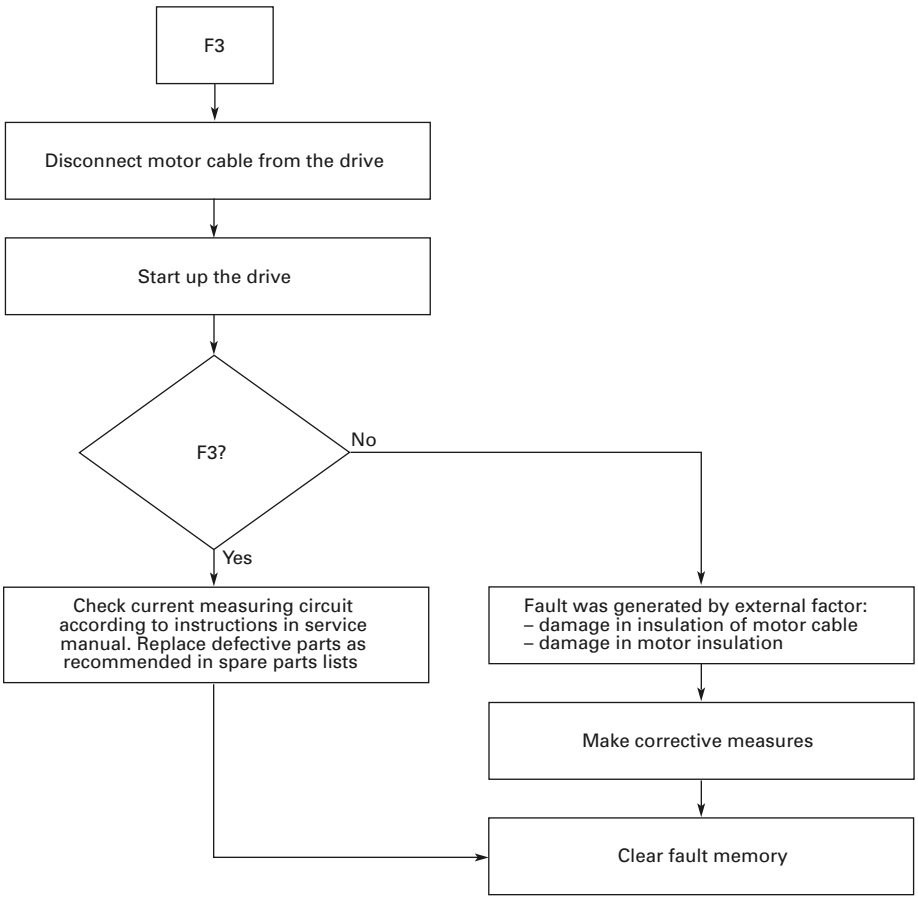

F5—Charging Switch

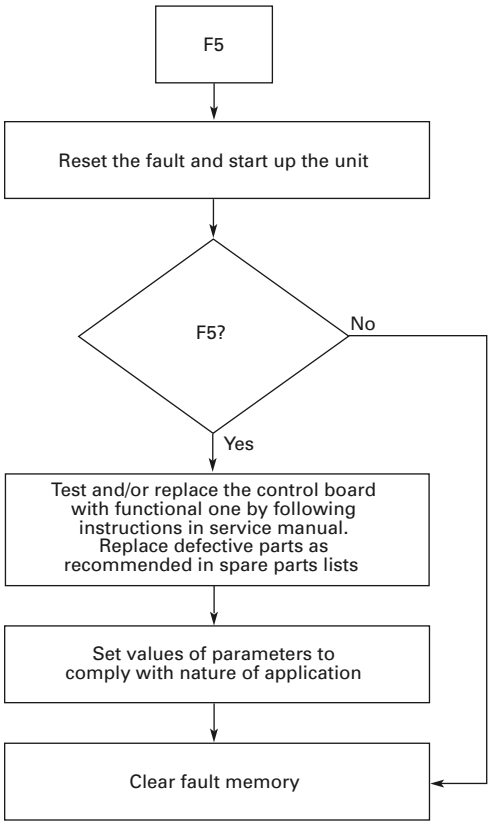

F6—Emergency Stop

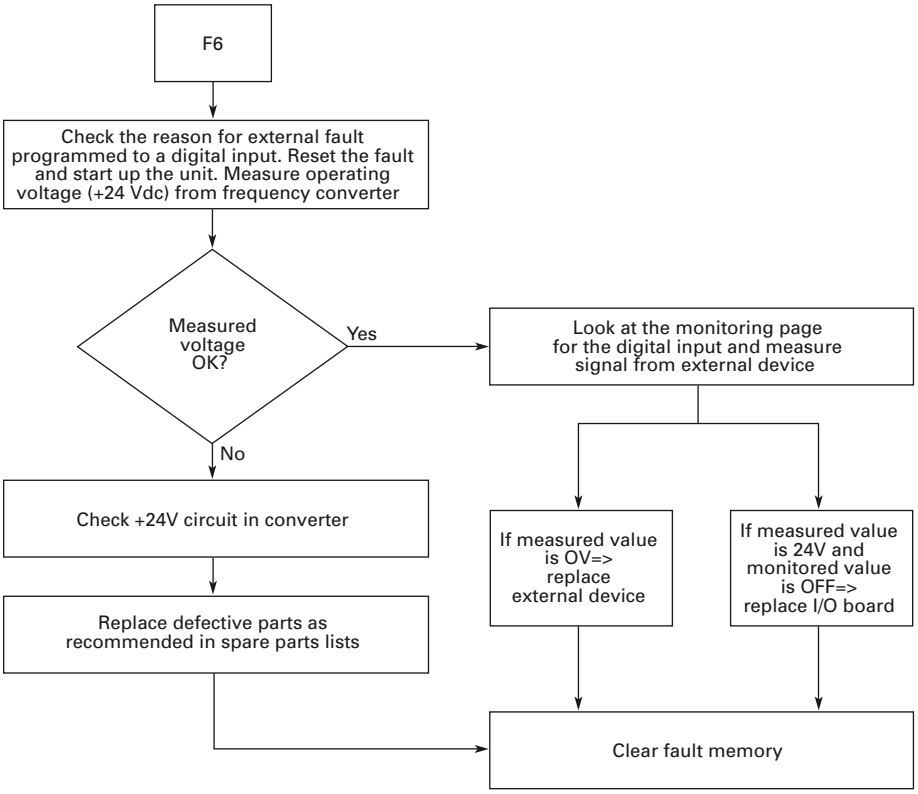

F7—Saturation Trip

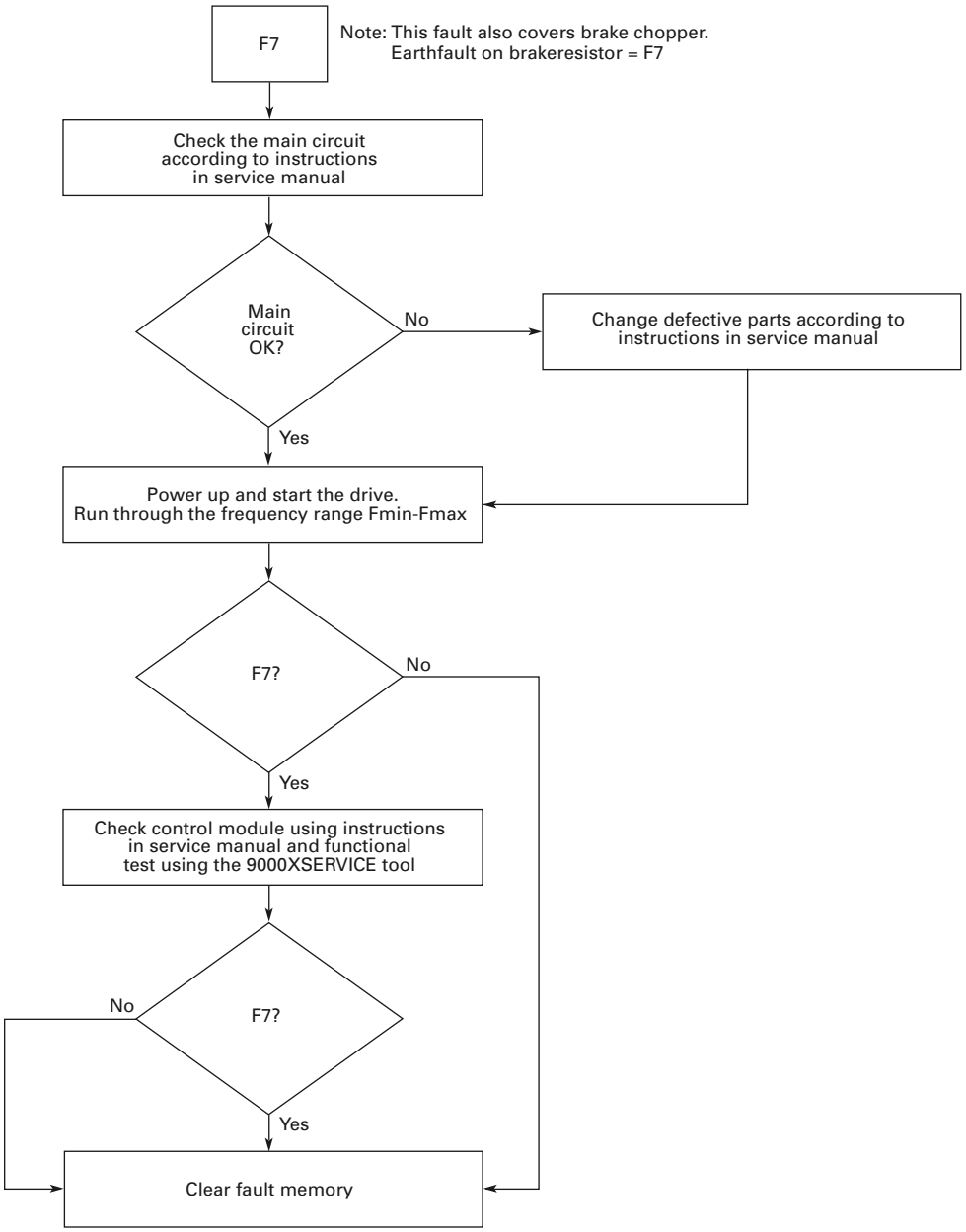

F8—System Fault

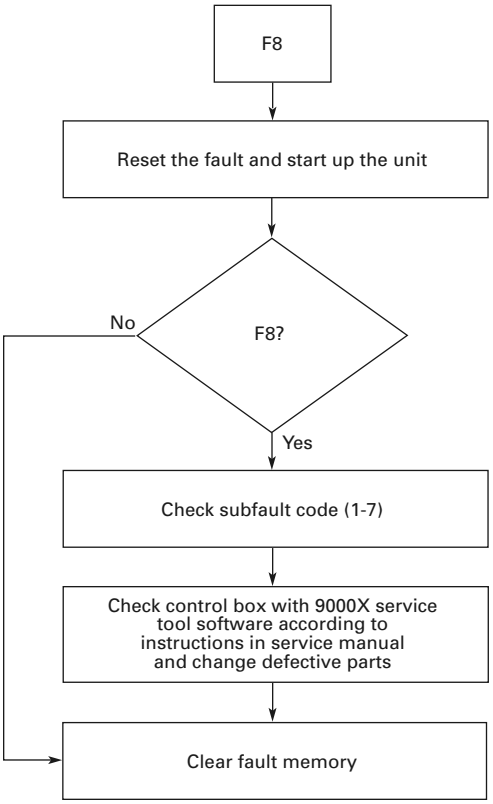

Note: Subfault codes:
1 = feedback fault
2 = Asic fault
3 = Asic fault
4 = Asic fault
5 = vacon bus problem
6 = charging relay fault
7 = charging relay fault

F9—Undervoltage

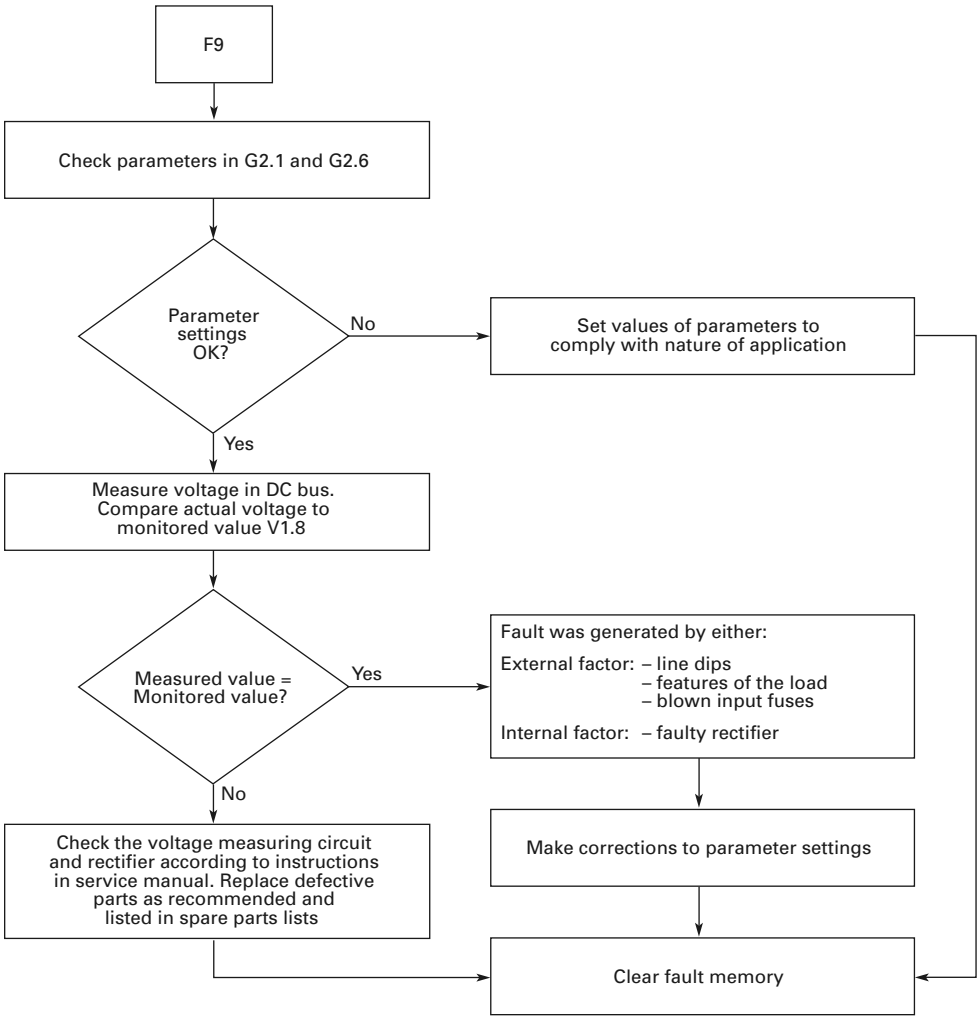

F10—Input Line Supervision

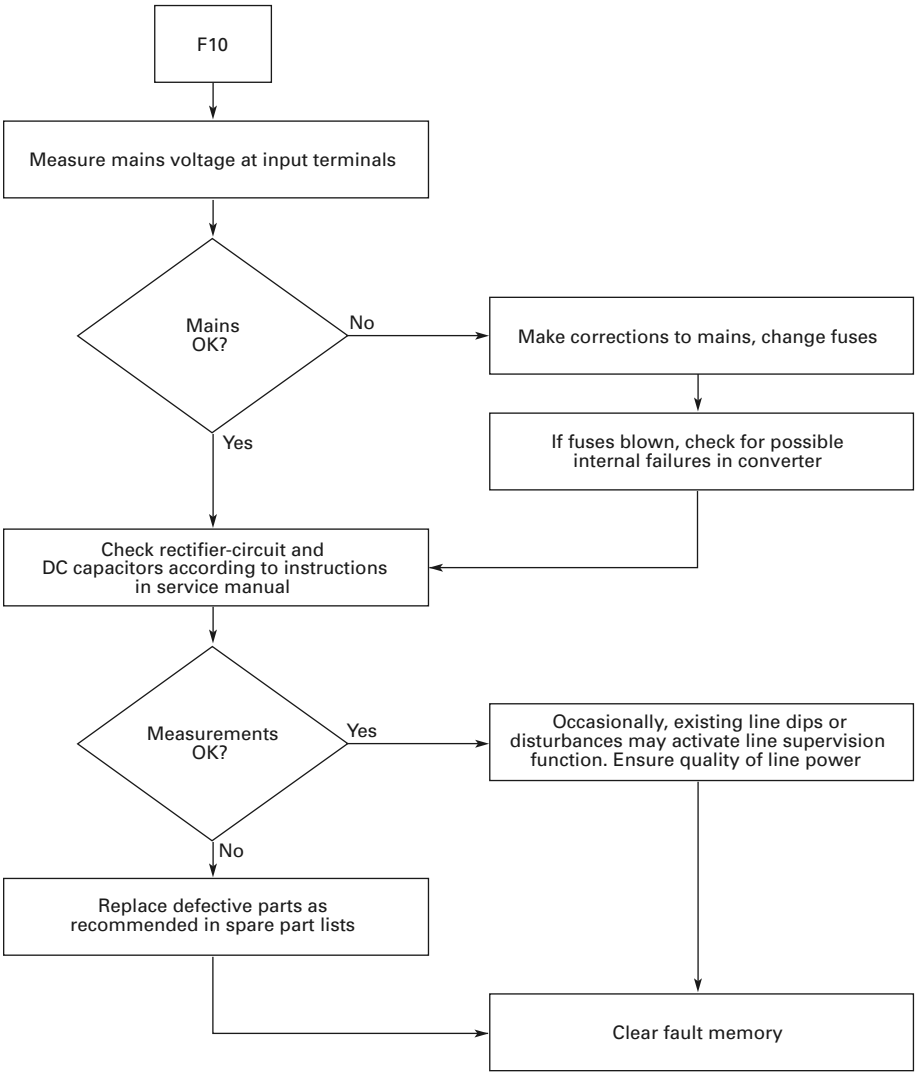

F11—Output Phase Supervision

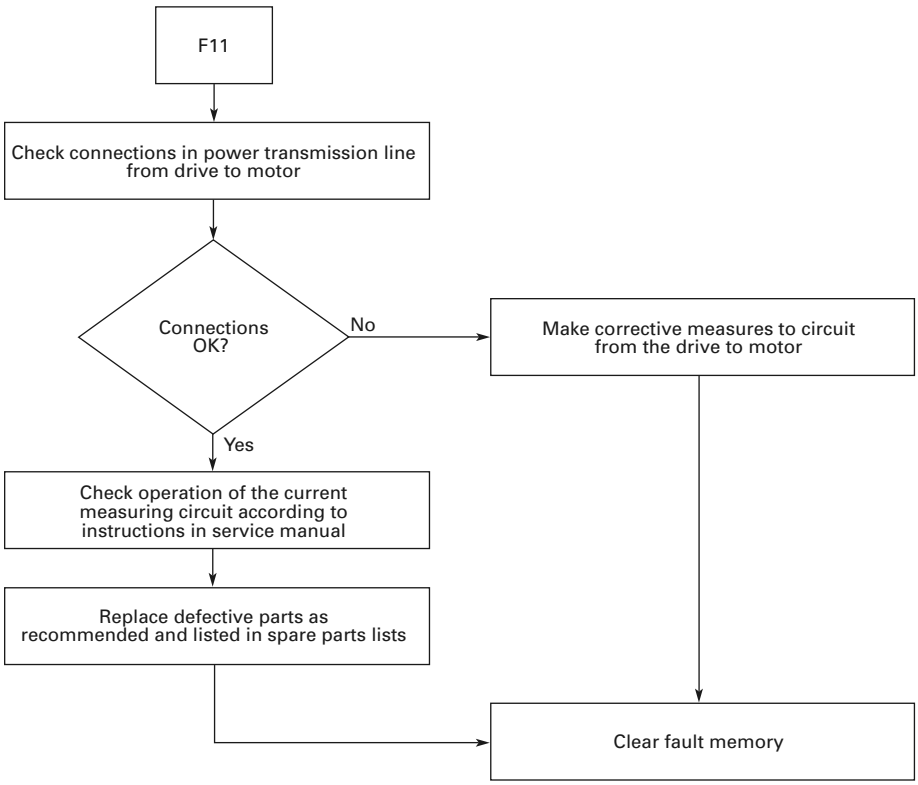

F12—Brake Chopper Supervision

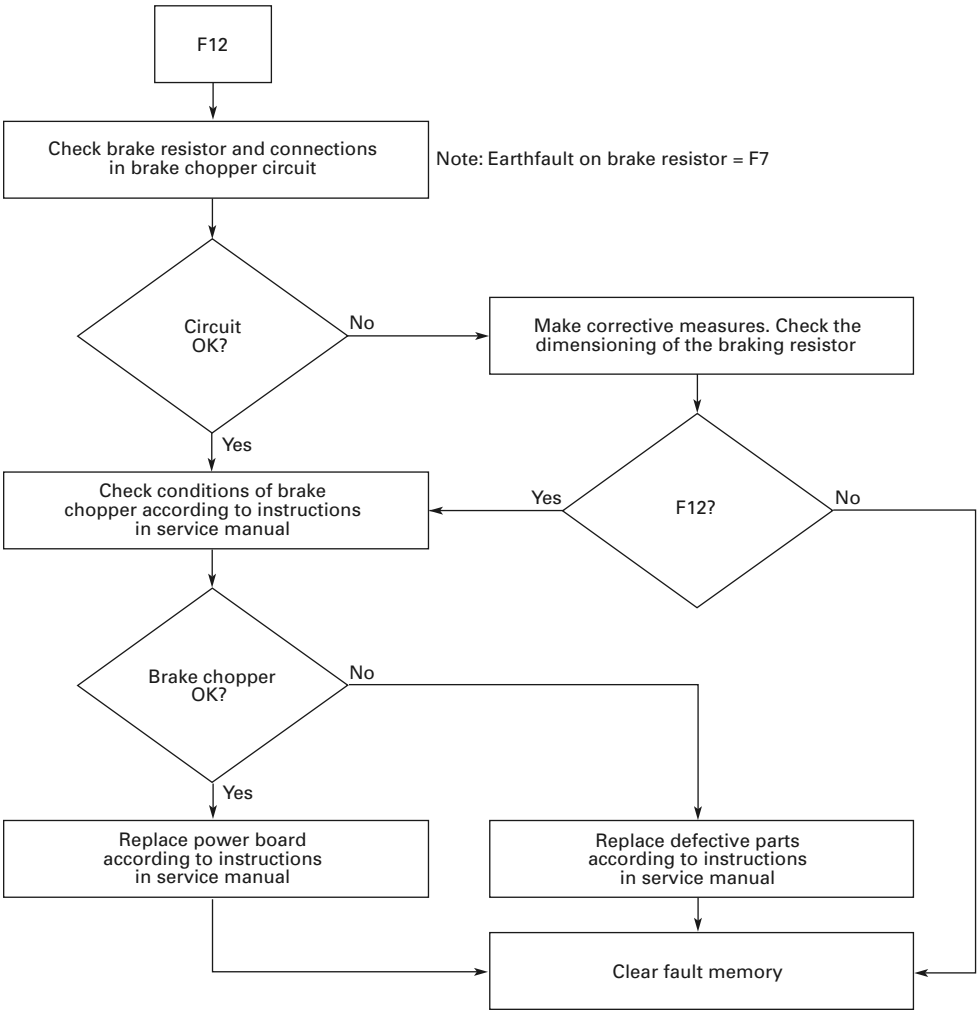

F13—Frequency Converter Under Temperature

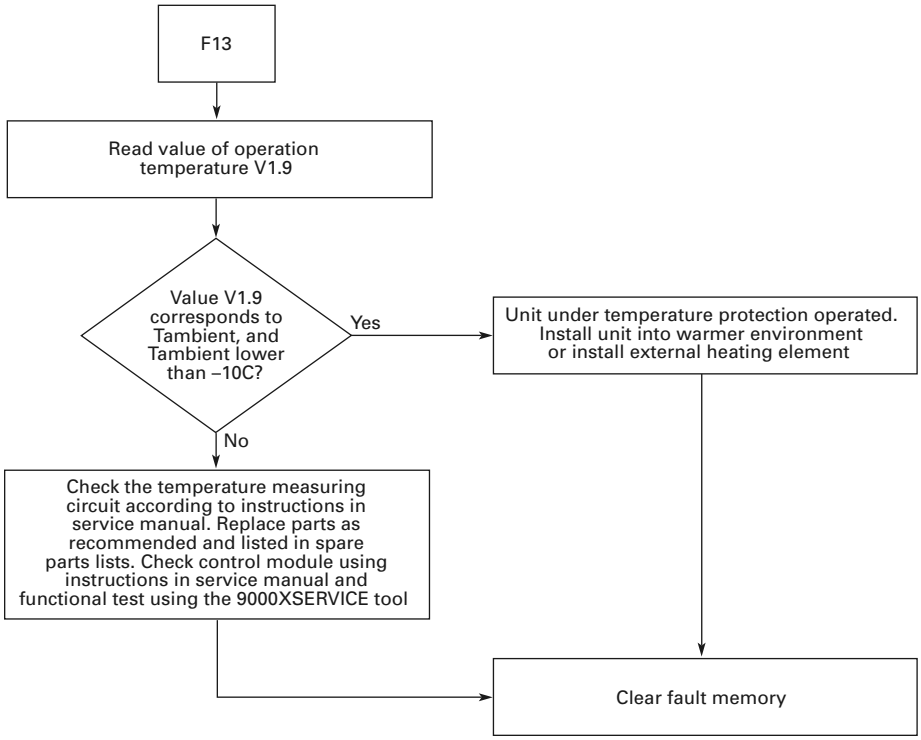

F14—Frequency Converter Over Temperature

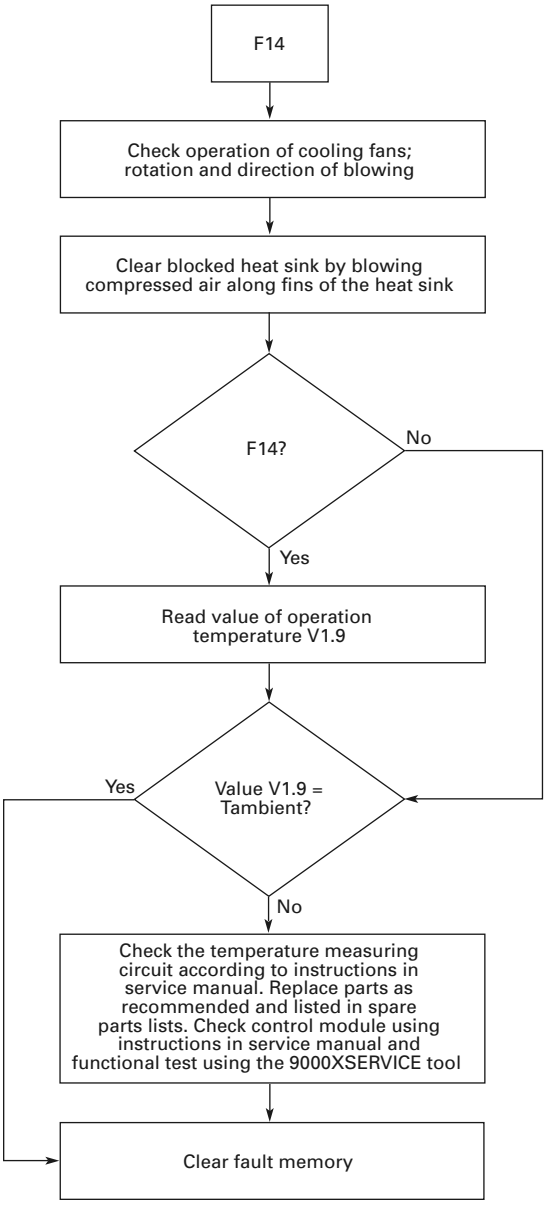

F15—Motor Stalled

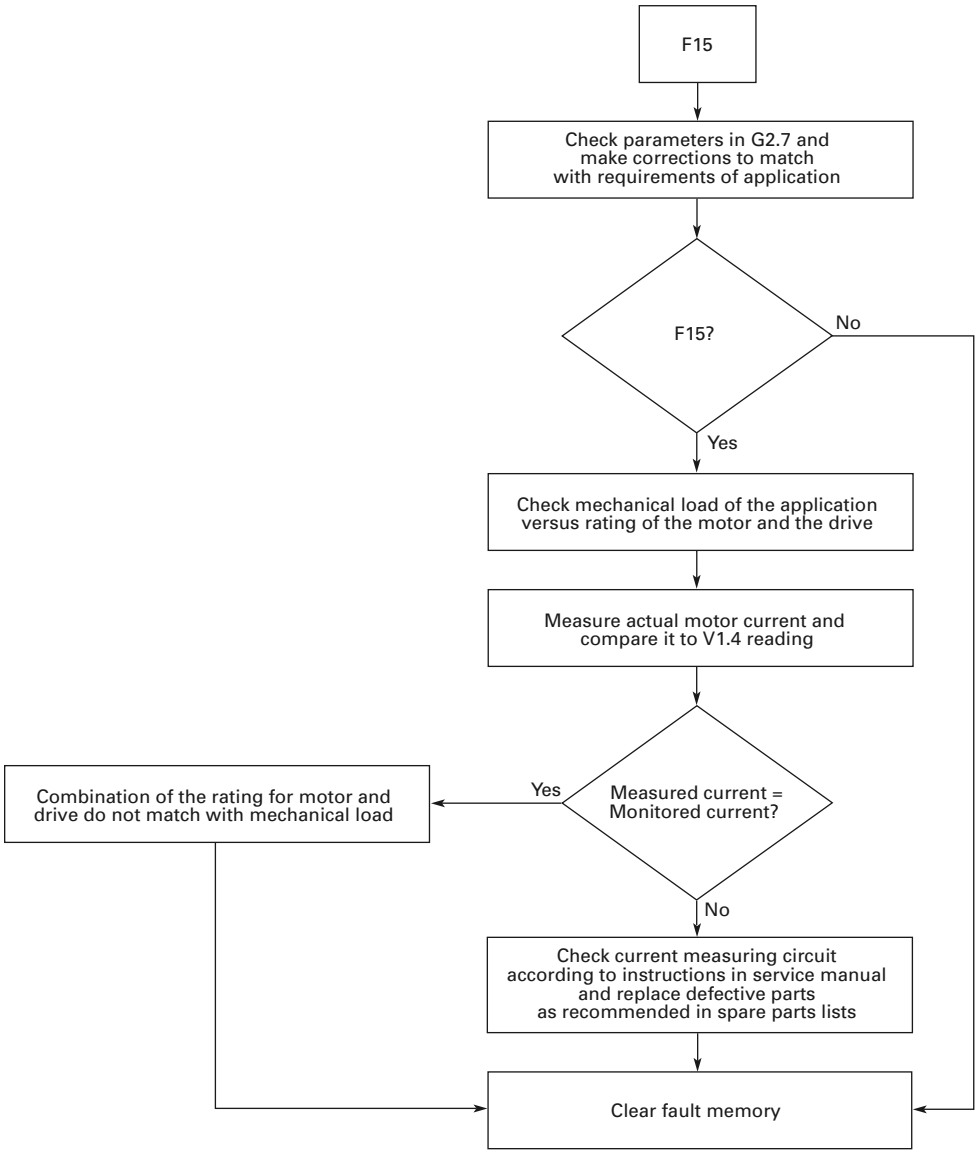

F16—Motor Over Temperature

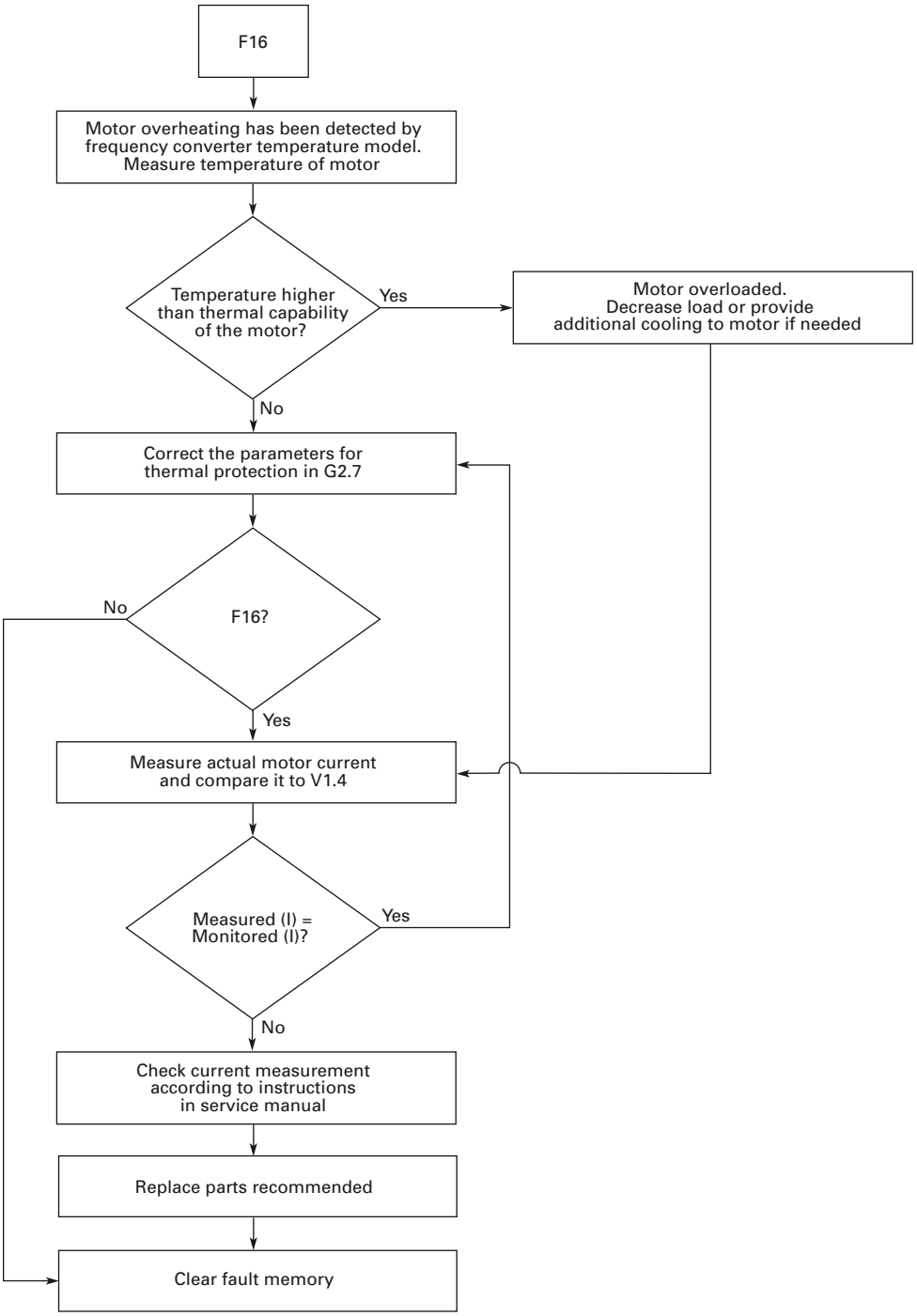

F17—Motor Under Load

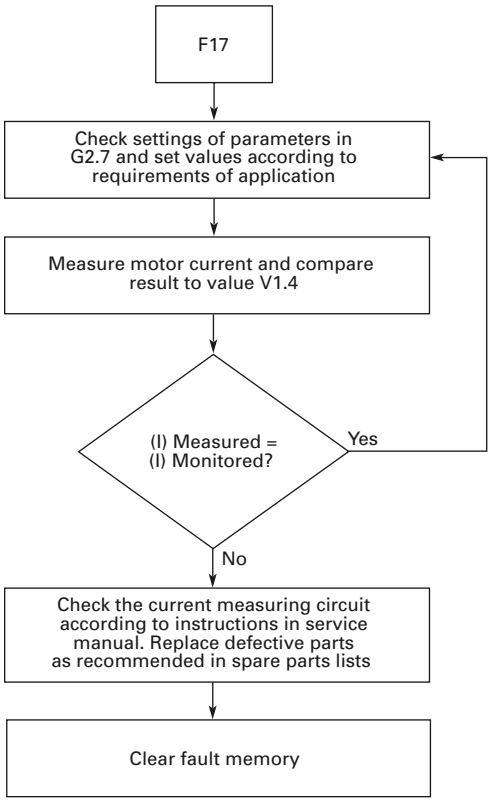

F22—Param Fault

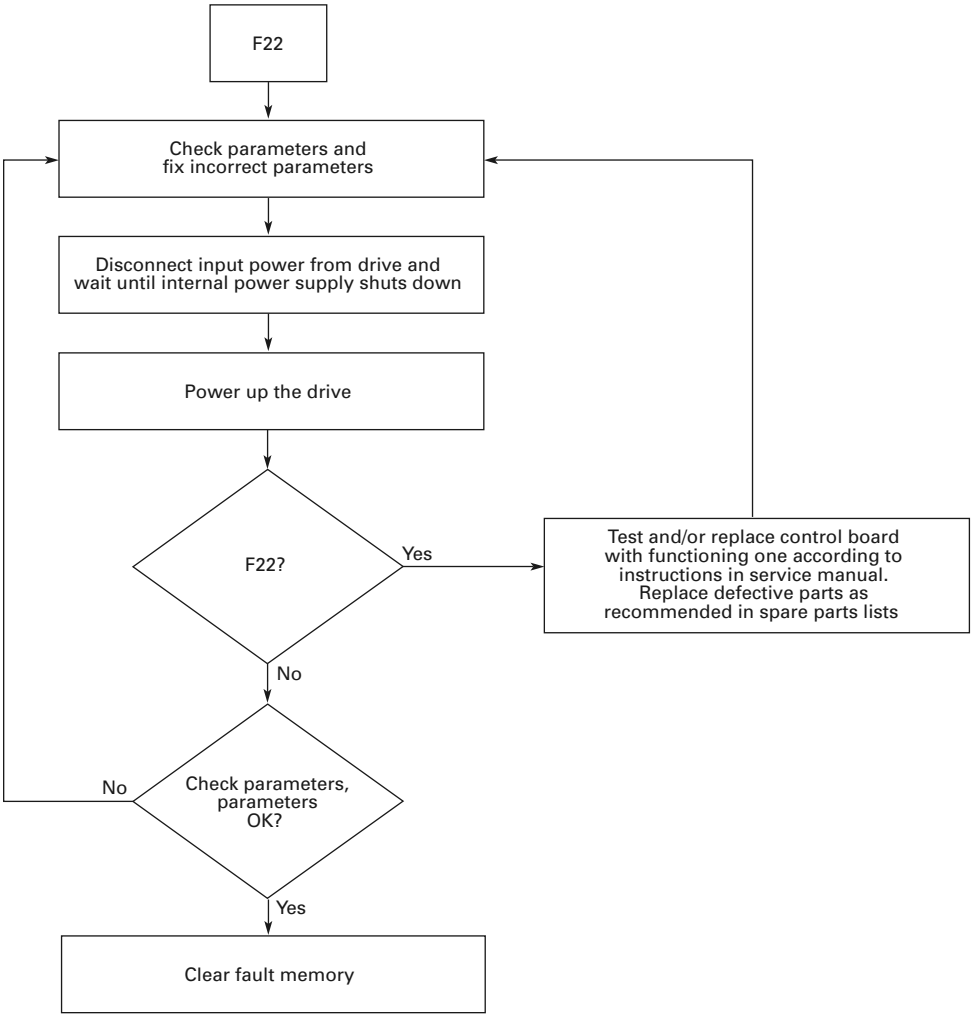

F24—Counter Fault

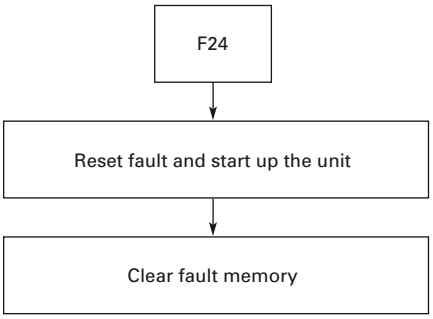

F25—Microprocessor Watchdog Fault

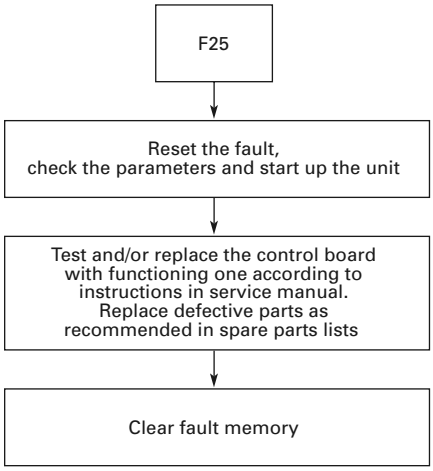

F31—IGBT Temperature (Hardware)

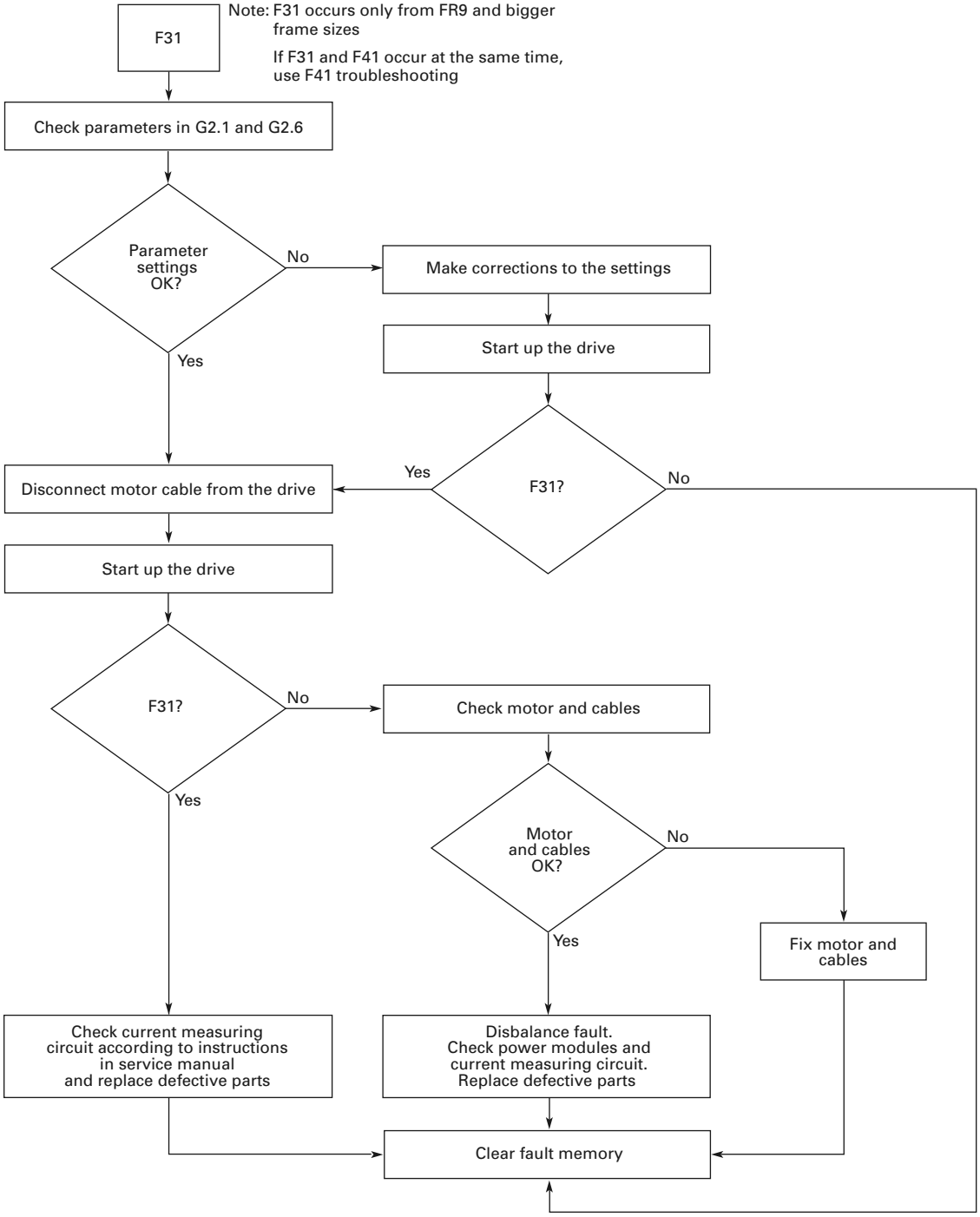

F32—Fan Cooling

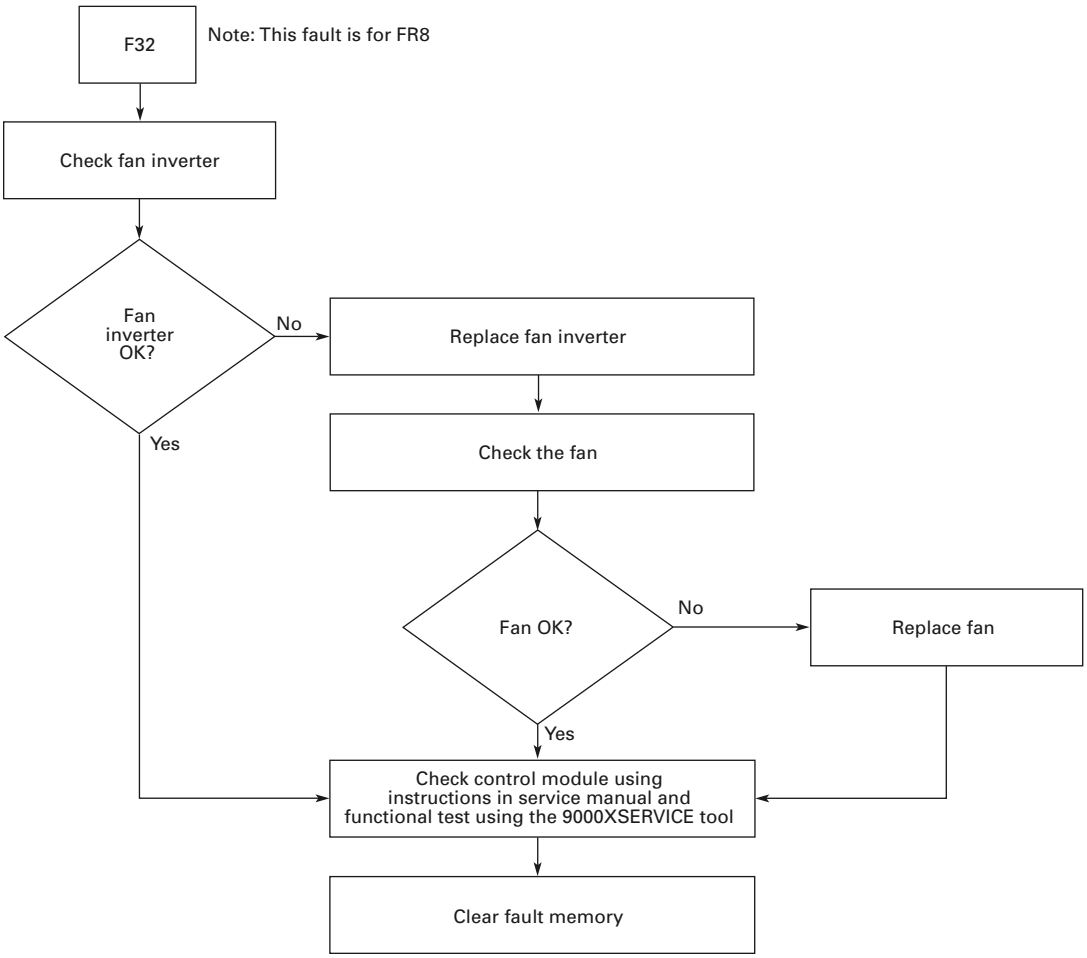

F36—Control Unit

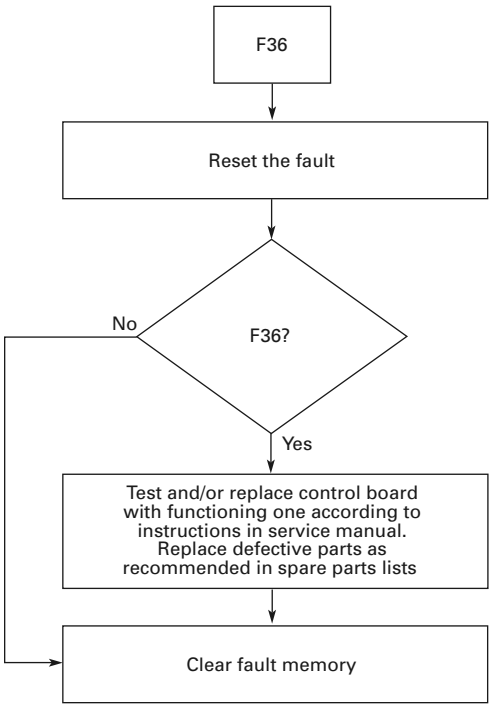

F37—Device Change

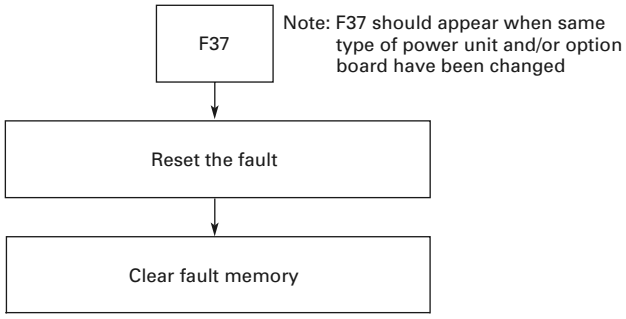

Note: Faulty board is displayed on panel bottom line

1 = Control card	A = Slot A
2 = Control unit	B = Slot B
3 = Power card	C = Slot C
4 = Power unit	D = Slot D
5 = Adapter card	E = Slot E

F38—Device Added (Indication Only)

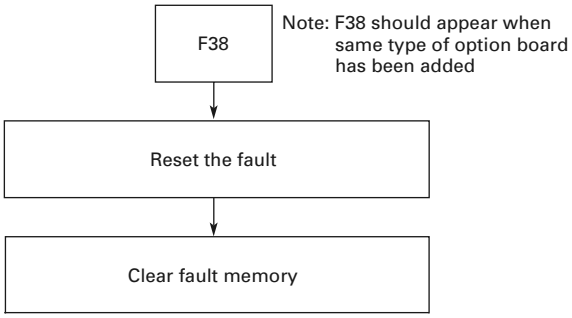

Note: Faulty board is displayed on panel bottom line

1 = Control card	A = Slot A
2 = Control unit	B = Slot B
5 = Adapter card	C = Slot C
	D = Slot D
	E = Slot E

F39—Device Removed

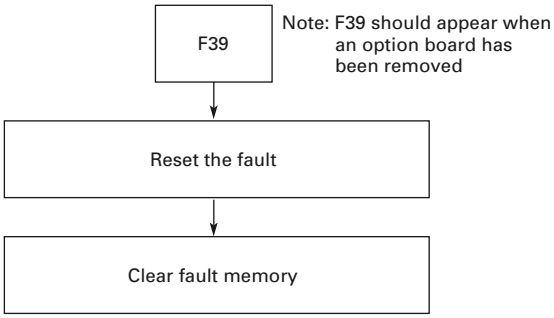

Note: Faulty board is displayed on panel bottom line

A = Slot A
B = Slot B
C = Slot C
D = Slot D
E = Slot E
5 = Adapter card

F40—Device Unknown

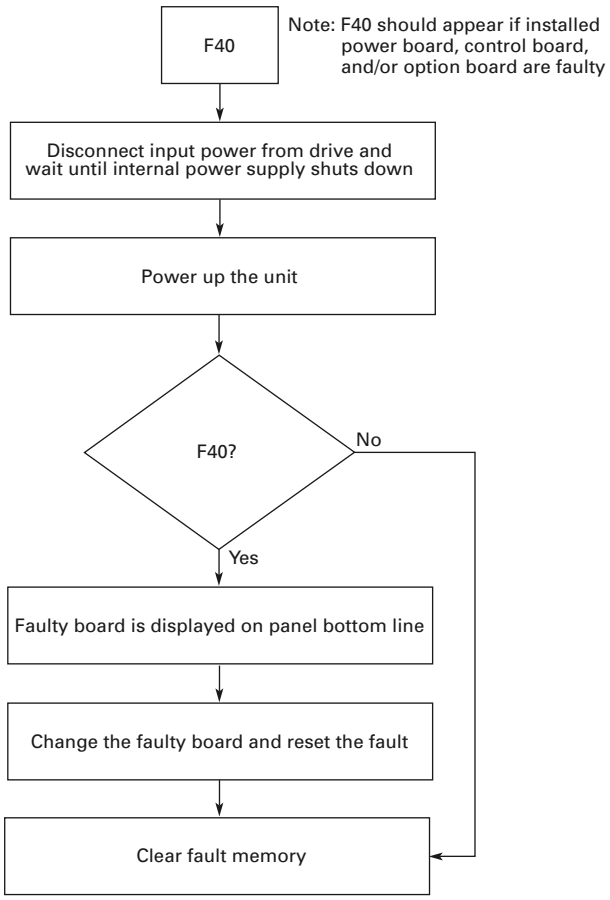

Note: Faulty board is displayed on panel bottom line

1 = Control card	A = Slot A
2 = Control unit	B = Slot B
3 = Power card	C = Slot C
4 = Power unit	D = Slot D
5 = Adapter card	E = Slot E

F41—IGBT Temperature

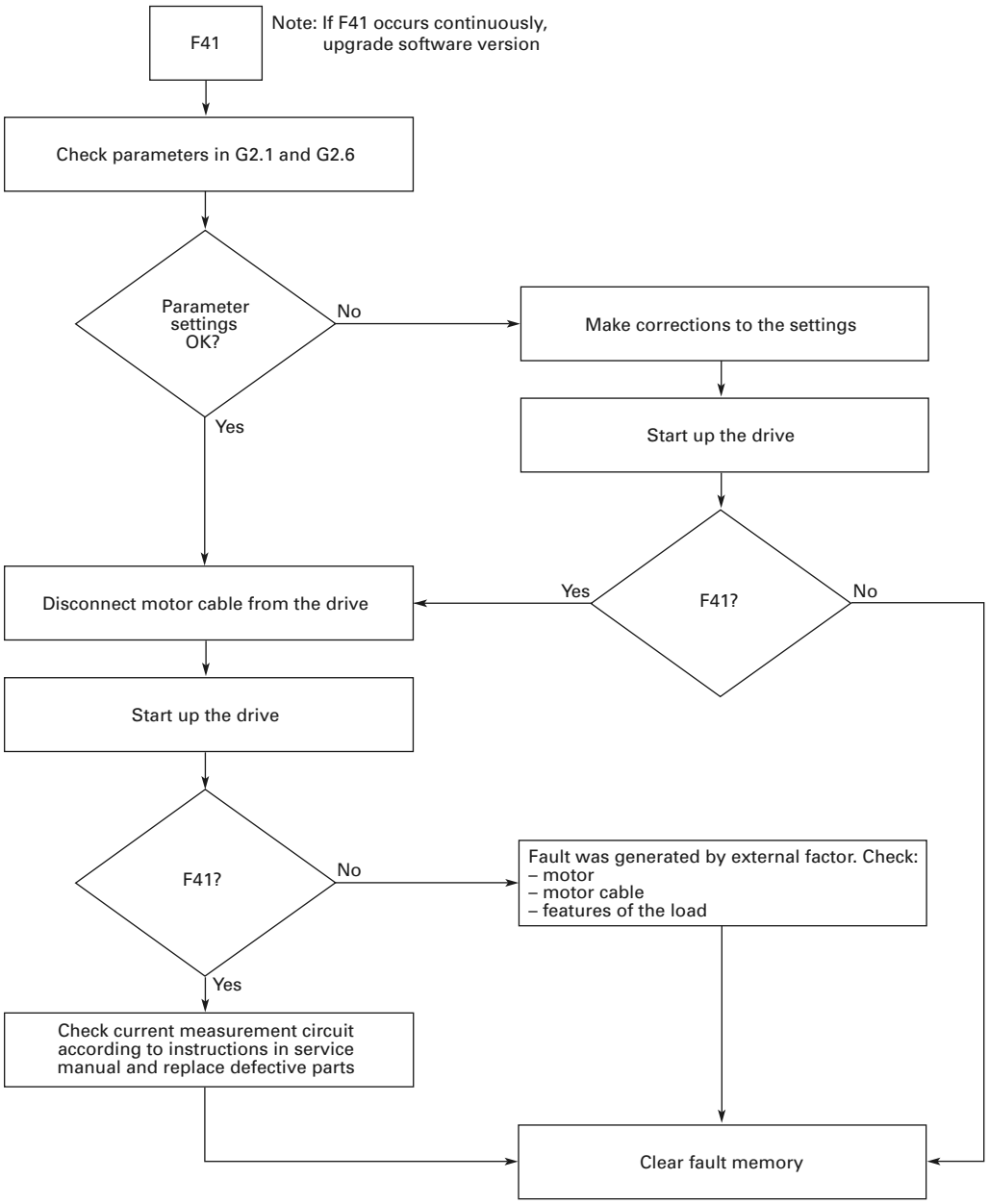

F42—Brake Resistor Over Temperature

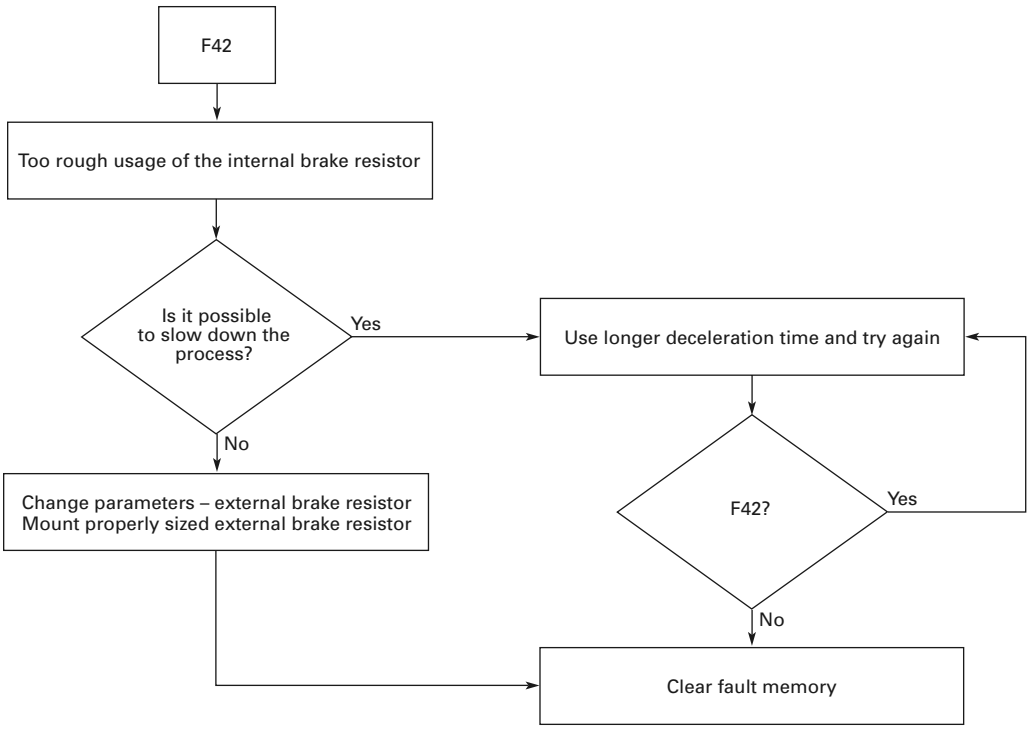

F44—DevParChange

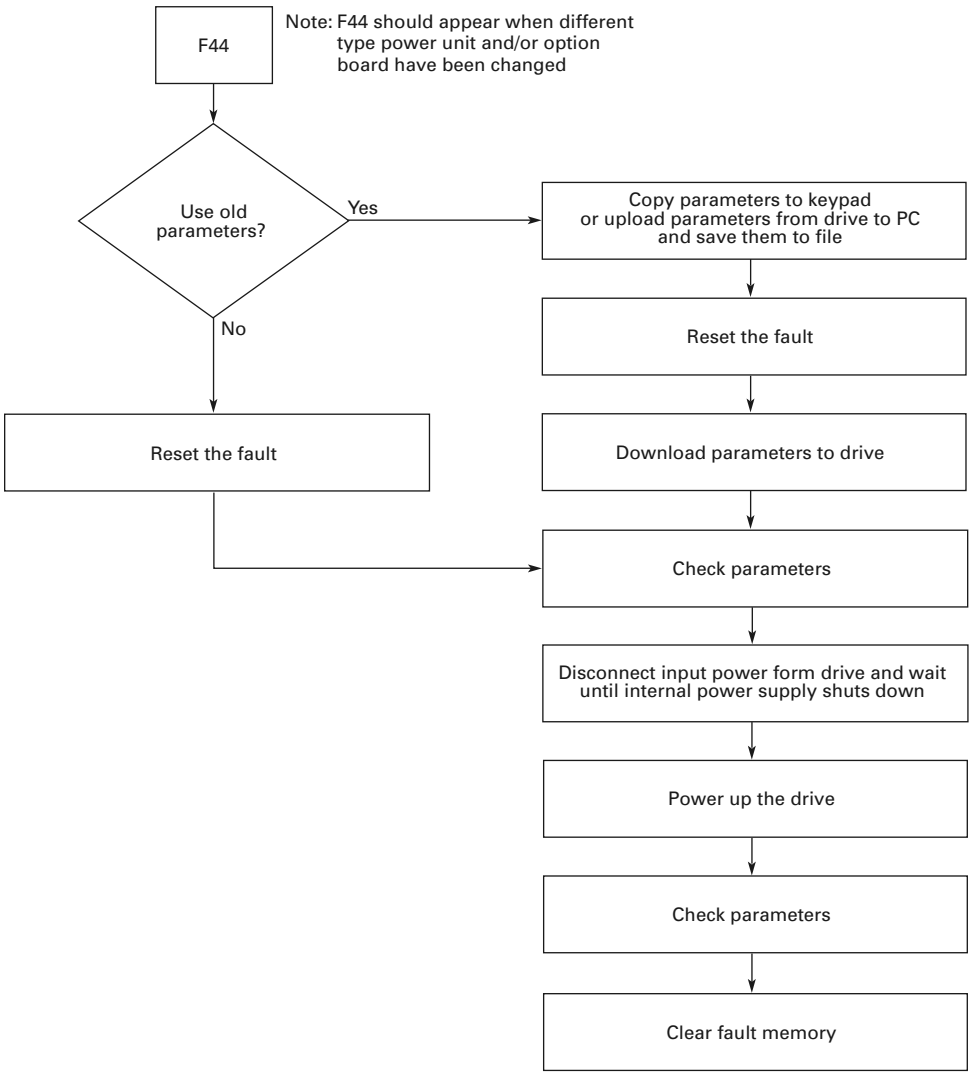

Note: Faulty board is displayed on panel bottom line
A = Slot A
B = Slot B
C = Slot C
D = Slot D
E = Slot E
4 = Power unit

F45—DevParAdded

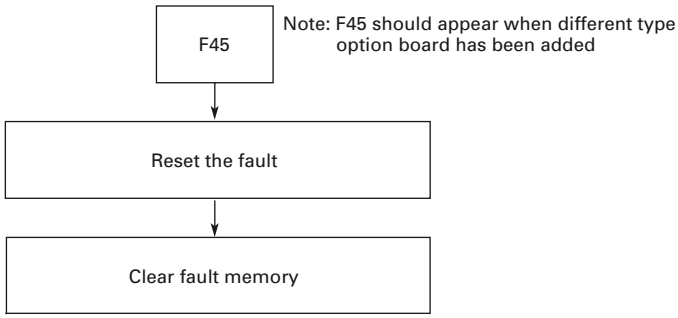

Note: Faulty board is displayed on panel bottom line

A = Slot A
B = Slot B
C = Slot C
D = Slot D
E = Slot E

F50—Analog Input I_{in} <4 mA

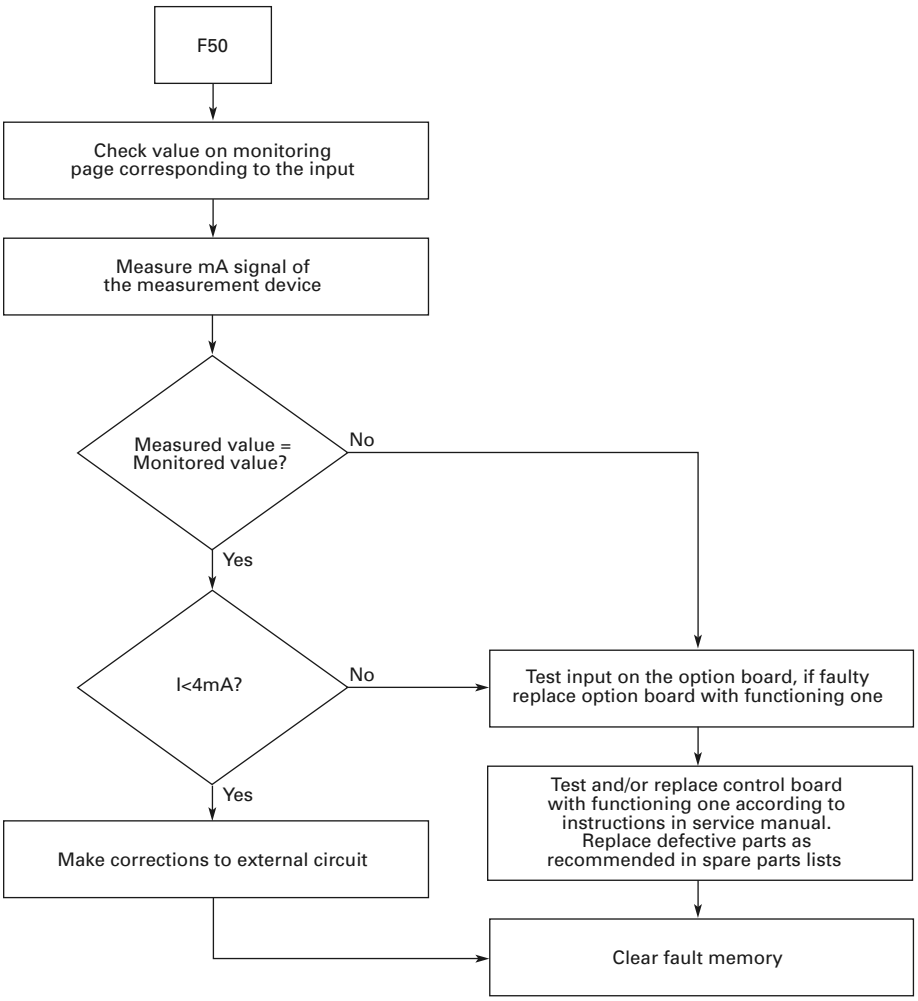

F51—External Fault

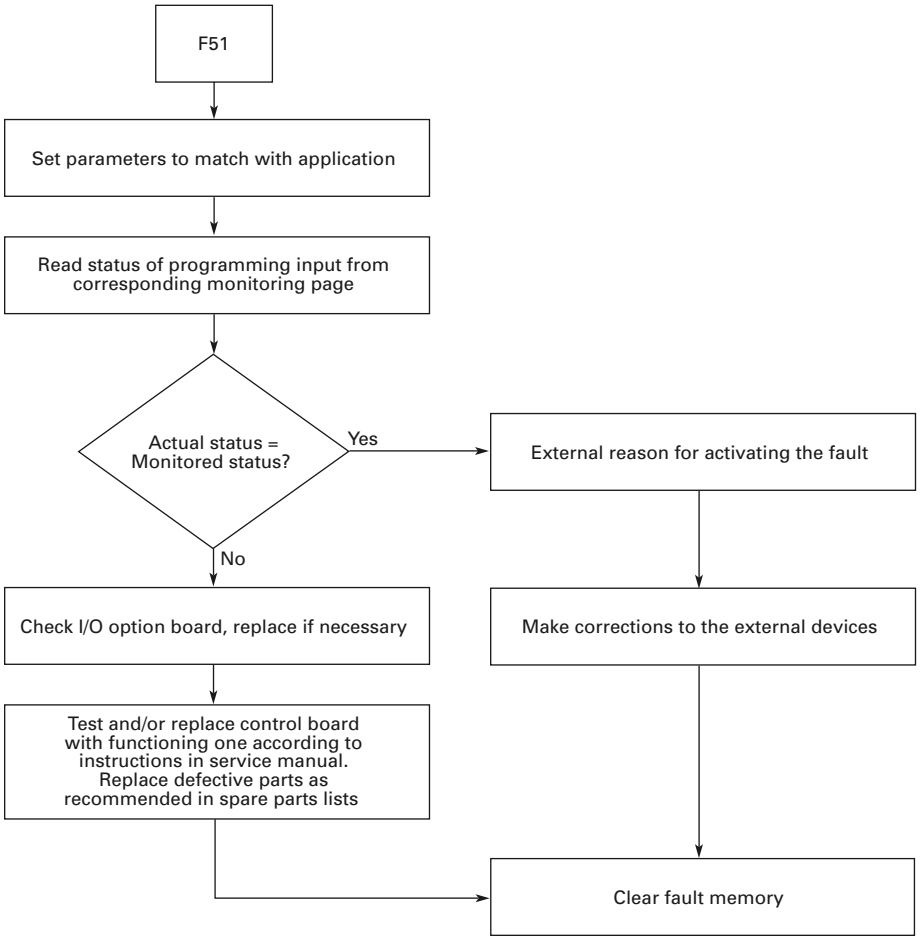

F52—Keypad Communication Fault

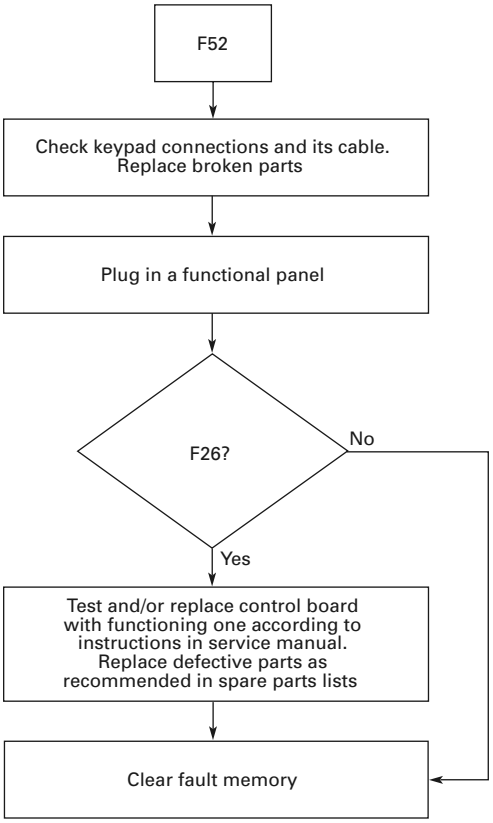

Spare Parts

Series Option Board Kits

The 9000X Series drives can accommodate a wide selection of expander and adapter option boards to customize the drive for your application needs. The drive's control unit is designed to accept a total of five option boards (see figure below).

The 9000X Series factory-installed standard board configuration includes an A9 I/O board and an A2 relay output board, which are installed in slots A and B.

9000X Series Option Boards

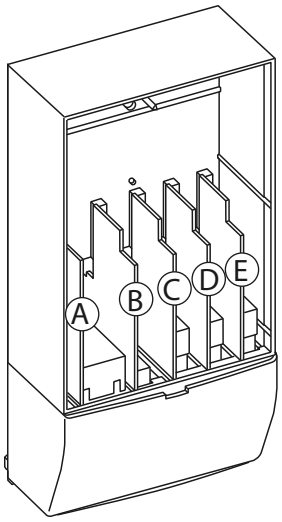

Option Board Kits

Option Kit Description ①	Allowed Slot Locations ②	Field Installed Catalog Number	Factory Installed Option Designator	9000X Ready Programs Basic	Local/ Remote	Standard	MSS	PID	Multi-P.	PFC
Standard I/O Cards (See figure above)										
2 RO (NC/NO)	B	**OPTA2**	—	X	X	X	X	X	X	X
6 DI, 1 DO, 2 AI, 1AO, 1 +10 Vdc ref, 2 ext +24 Vdc/ EXT +24 Vdc	A	**OPTA9**	—	X	X	X	X	X	X	X
Extended I/O Card Options										
2 RO, therm	B	**OPTA3**	**A3**	—	X	X	X	X	X	X
Encoder low volt +5V/15V/24V ③	C	**OPTA4**	**A4**	—	X	X	X	X	X	X
Encoder high volt +15V/24V ③	C	**OPTA5**	**A5**	—	X	X	X	X	X	X
Double encoder ③	C	**OPTA7**	**A7**	X	X	X	X	X	X	X
6 DI, 1 DO, 2 AI, 1 AO	A	**OPTA8**	**A8**	—	X	X	X	X	X	X
3 DI (encoder 10–24V), out +15V/+24V, 2 DO (pulse+direction) ③	C	**OPTAE**	**AE**	X	X	X	X	X	X	X
Safe disable ③		**OPTAF**								

Notes

① AI = Analog Input; AO = Analog Output, DI = Digital Input, DO = Digital Output, RO = Relay Output.
② Option card must be installed in one of the slots listed for that card. Slot indicated in bold is the preferred location.
③ SPX drives only.

Option Board Kits, continued

Option Kit Description ①	Allowed Slot Locations ②	Field Installed Catalog Number	Factory Installed Option Designator	9000X Ready Programs Basic	Local/ Remote	Standard	MSS	PID	Multi-P.	PFC
Extended I/O Card Options (Continued)										
6 DI, 1 ext +24 Vdc/EXT +24 Vdc	B, C, **D**, E	**OPTB1**	**B1**	—	—	—	—	—	X	X
1 RO (NC/NO), 1 RO (NO), 1 therm	B, C, **D**, E	**OPTB2**	**B2**	—	—	—	—	—	X	X
1 AI (mA isolated), 2 AO (mA isolated), 1 ext +24 Vdc/ EXT +24 Vdc	B, C, **D**, E	**OPTB4**	**B4**	—	X	X	X	X	X	X
3 RO (NO)	B, C, **D**, E	**OPTB5**	**B5**	—	—	—	—	—	X	X
1 ext +24 Vdc/EXT +24 Vdc, 3 Pt100	B, C, **D**, E	**OPTB8**	**B8**	—	—	—	—	—	—	—
1 RO (NO), 5 DI 42 – 240 Vac Input	B, C, **D**, E	**OPTB9**	**B9**	—	—	—	—	—	X	X
SPI, absolute encoder ③	C	**OPTBB**	**BB**	—	—	—	—	—	—	—
Communication Cards										
Modbus® ④	D, **E**	**OPTC2**	**C2**	X	X	X	X	X	X	X
Johnson Controls® N2 ④	D, **E**	**OPTC2**	**CA**	—	—	—	—	—	—	—
Modbus TCP	D, **E**	**OPTCI**	**CI**	X	X	X	X	X	X	X
BACnet®	D, **E**	**OPTCJ**	**CJ**	X	X	X	X	X	X	X
EtherNet/IP	D, **E**	**OPTCQ**	**CQ**	X	X	X	X	X	X	X
PROFIBUS® DP	D, **E**	**OPTC3**	**C3**	X	X	X	X	X	X	X
LonWorks®	D, **E**	**OPTC4**	**C4**	X	X	X	X	X	X	X
PROFIBUS DP (D9 connector)	D, **E**	**OPTC5**	**C5**	X	X	X	X	X	X	X
CANopen (slave)	D, **E**	**OPTC6**	**C6**	X	X	X	X	X	X	X
DeviceNet™	D, **E**	**OPTC7**	**C7**	X	X	X	X	X	X	X
Modbus (D9 type connector)	D, **E**	**OPTC8**	**C8**	X	X	X	X	X	X	X
Adapter ③	D, **E**	**OPTD1**	**D1**	X	X	X	X	X	X	X
Adapter ③	D, **E**	**OPTD2**	**D2**	X	X	X	X	X	X	X
RS-232 with D9 connection	D, **E**	**OPTD3**	**D3**	X	X	X	X	X	X	X
Keypad										
9000X Series local/remote keypad (replacement keypad)	—	**KEYPAD-LOC/REM**	**—**	—	—	—	—	—	—	—
9000X Series remote mount keypad unit (keypad not included, includes 10 ft cable, keypad holder, mounting hardware)	—	**OPTRMT -KIT- 9000X**	**—**	—	—	—	—	—	—	—
9000X Series RS-232 cable, 13 ft	—	**PP00104**	**—**	—	—	—	—	—	—	—

Notes

① AI = Analog Input; AO = Analog Output, DI = Digital Input, DO = Digital Output, RO = Relay Output.
② Option card must be installed in one of the slots listed for that card. Slot indicated in bold is the preferred location.
③ SPX drives only.
④ OPTC2 is a multi-protocol option card.

Johnson Controls Metasys N2 Network Communications

The OPTC2 fieldbus board provides communication between the 9000X drive and a Johnson Controls Metasys™ N2 network. With this connection, the drive can be controlled, monitored, and programmed from the Metasys system. The N2 fieldbus is available as a factory-installed option and as a field-installable kit.

Modbus/TCP Network Communications

The Modbus/TCP Network Card OPTCI is used for connecting the 9000X drive to Ethernet networks using Modbus protocol. It includes an RJ-45 pluggable connector. This interface provides a selection of standard and custom register values to communicate drive parameters. The board supports 10 Mbps and 100 Mbps communication speeds. The IP address of the board is configurable over Ethernet using a supplied software tool.

BACnet Network Communications

The BACnet Network Card OPTCJ is used for connecting the 9000X drive to BACnet networks. It includes a 5.08 mm pluggable connector. Data transfer is Master-Slave/Token Passing (MS/TP) RS-485. This interface uses a collection of 30 Binary Value Objects (BVOs) and 35 Analog Value Objects (AVOs) to communicate drive parameters. The card supports 9.6, 19.2, and 38.4 Kbaud communication speeds and supports network addresses 1–127.

EtherNet/IP Network Communications

The EtherNet/IP Network Card OPTCK is used for connecting the 9000X drive to Ethernet/Industrial Protocol networks. It includes an RJ-45 pluggable connector. The interface uses CIP objects to communicate drive parameters (CIP is "Common Industrial Protocol," the same protocol used by DeviceNet). The board supports 10 Mbps and 100 Mbps communication speeds. The IP address of the board is configurable by Static, BOOTP, and DHCP methods.

Modbus RTU Network Communications

The Modbus Network Card OPTC2 is used for connecting the 9000X drive as a slave on a Modbus network. The interface is connected by a 9-pin DSUB connector (female) and the baud rate ranges from 300 to 19200 baud. Other communication parameters include an address range from 1 to 247; a parity of None, Odd or Even; and the stop bit is 1.

PROFIBUS Network Communications

The PROFIBUS Network Card OPTC3 is used for connecting the 9000X drive as a slave on a PROFIBUS-DP network. The interface is connected by a 9-pin DSUB connector (female). The baud rates range from 9.6K baud to 12M baud, and the addresses range from 1 to 127.

LonWorks Network Communications

The LonWorks Network Card OPTC4 is used for connecting the 9000X drive on a LonWorks network. This interface uses Standard Network Variable Types (SNVT) as data types. The channel connection is achieved using a FTT-10A Free Topology transceiver via a single twisted transfer cable. The communication speed with LonWorks is 78 kBits/s.

CANopen (Slave) Communications

The CANopen (Slave) Network Card OPTC6 is used for connecting the 9000X drive to a host system. According to ISO11898 standard cables to be chosen for CANbus should have a nominal impedance of 120 ohms, and specific line delay of nominal 5 ns/m. 120 ohms line termination resistors required for installation.

DeviceNet Network Communications

The DeviceNet Network Card OPTC7 is used for connecting the 9000X drive on a DeviceNet Network. It includes a 5.08 mm pluggable connector. Transfer method is via CAN using a two-wire twisted shielded cable with two-wire bus power cable and drain. The baud rates used for communication include 125K baud, 250K baud, and 500K baud.

Drive Options

Control Panel Options

Control Panel Factory Options

Description	Factory Installed Option Code	Field Installed NEMA Type 1 Catalog Number
Local/Remote Keypad SVX9000 Control Panel—This option is standard on all drives and consists of an RS-232 connection, backlit alphanumeric LCD display with nine indicators for the RUN status and two indicators for the control source. The nine pushbuttons on the panel are used for panel programming and monitoring of all 9000X parameters. The panel is detachable and isolated from the input line potential. Include LOC/REM key to choose control location.	**A**	**KEYPAD-LOC/REM**
Keypad Remote Mounting Kit—This option is used to remote mount the 9000X keypad. The footprint is compatible to the SV9000 remote mount kit. Includes 10 ft cable, keypad holder, and mounting hardware.	—	**OPTRMT-KIT-9000X**
Keypad Blank—9000X Series select keypad for use with special and custom applications.	—	**KEYPAD-BLANK**
9000X Drive—A PC-based tool for controlling and monitoring of the 9000X. Features include: loading parameters that can be saved to a file or printed, setting references, starting and stopping the motor, monitoring signals in graphical or text form, and real-time display. To avoid damage to the drive or computer, SVDrivecable must be used.	—	**9000XDRIVE**
SVDrivecable—6 ft (1.8m) RS-232 cable (22 gauge) with a 7-pin connector on each end. Should be used in conjunction with the 9000X drive option to avoid damage to the drive or the computer. The same cable can be used for downloading specialized applications to the drive.	—	**SVDRIVECABLE**

Spare Units and Replacement Parts for 9000X Drives

9000X Spare Units

Description	Catalog Number
Control Unit—Includes the control board, blue base housing, installed 9000X software program and blue flip cover. Does not include any OPT boards or keypad. See **Page 110** for standard and option boards and keypad.	**CSBS0000000000** (for SVX)
	CPBS0000000000 (for SPX)

208–240V

Replacement Parts—9000X Drives, 208–240V

Frame:	4					5			6		7			8			
hp (I_H):	3/4	1	1-1/2	2	3	5 ①	5	7-1/2	10	15	20	25	30	40	50	60	Catalog Number
Control Board																	
	1	1	1	1	1	1	1	1	1	1	1	1	1	1	1	1	**VB00252** (for SVX)
	1	1	1	1	1	1	1	1	1	1	1	1	1	1	1	1	**VB00561** (for SPX)
Power Boards																	
	1																**VB00308-0004-2**
		1															**VB00308-0007-2**
			1														**VB00308-0008-2**
				1													**VB00310-0011-2**
					1												**VB00310-0012-2**
						1											**VB00313-0017-2**
							1										**VB00313-0025-2**
								1									**VB00313-0031-2**
									1								**VB00316-0048-2**
										1							**VB00316-0061-2**
											1						**VB00319-0075-2**
												1					**VB00319-0088-2**
													1				**VB00319-0114-2**
														1			**VB00322-0140-2**
															1		**VB00322-0170-2**
																1	**VB00322-0205-2**
Electrolytic Capacitors																	
	2	2	2														**PP01000**
				2	2												**PP01001**
						2	2										**PP01002**
								2									**PP01003**
									2	2							**PP01004**
											2	2	2	4	4		**PP01005**
																4	**PP01099**

Note

① 5 hp I_L only; has no corresponding I_H rated hp rating.

Replacement Parts—9000X Drives, 208–240V, continued

Frame:	4					5			6		7			8			Catalog Number
hp (I_H):	3/4	1	1-1/2	2	3	5 ①	5	7-1/2	10	15	20	25	30	40	50	60	
Cooling Fans																	
	1	1	1	1	1												**PP01060**
						1	1	1									**PP01061**
									1	1							**PP01062**
											1	1	1				**PP01063**
														1	1	1	**PP01123** ②
	1	1	1	1	1												**PP01086**
						1	1	1	1	1							**PP01088**
											1	1	1				**PP01049**
														1	2	2	**CP01180**
														1	1	1	**PP08037**
IGBT Modules																	
	1	1															**CP01304**
			1														**CP01305**
				1	1	1											**CP01306**
							1										**CP01307**
								1									**CP01308**
									1								**PP01022**
										1							**PP01023**
											1						**PP01024**
												1					**PP01025**
													1				**PP01029**
														1			**PP01026**
															1	1	**PP01027**
Choppers/Rectifiers																	
									1								**CP01367**
										1							**CP01368**
Diode/Thyristor Modules																	
											3	3	3				**PP01035**
														3	3	3	**CP01268**
Rectifying Boards																	
											1	1	1				**VB00242**
														1	1	1	**VB00227**

Notes

① 5 hp I_L only; has no corresponding I_H rated hp rating.

② PP00061 capacitor not included in main fan; please order separately.

FR4–FR9, 380–500V

Replacement Parts—FR4–FR9 9000X Drives, 380–500V

Frame:	4						5			6			7			8			9		Catalog Number
hp (I_H):	1	1-1/2	2	3	5	7-1/2 ①	7-1/2	10	15	20	25	30	40	50	60	75	100	125	150	200	
Control Board																					
	1	1	1	1	1	1	1	1	1	1	1	1	1	1	1	1	1	1	1	1	**VB00252** (for SVX)
	1	1	1	1	1	1	1	1	1	1	1	1	1	1	1	1	1	1	1	1	**VB00561** (for SPX)
Power Boards																					
	1																				**VB00208-0003-5**
		1																			**VB00208-0004-5**
			1																		**VB00208-0005-5**
				1																	**VB00208-0007-5**
					1																**VB00208-0009-5**
						1															**VB00210-0012-5**
							1														**VB00213-0016-5**
								1													**VB00213-0022-5**
									1												**VB00213-0031-5**
										1											**VB00216-0038-5**
											1										**VB00216-0045-5**
												1									**VB00216-0061-5**
													1								**VB00219-0072-5**
														1							**VB00219-0087-5**
															1						**VB00219-0105-5**
																1					**VB00236-0140-5**
																	1				**VB00236-0168-5**
																		1			**VB00236-0205-5**
Electrolytic Capacitors																					
	2	2	2	2																	**PP01000**
					2	2															**PP01001**
							2	2													**PP01002**
									2												**PP01003**
										2	2	2									**PP01004**
													2	2	2	4	4	4	8	8	**PP01005**
Cooling Fans																					
	1	1	1	1	1	1															**PP01060**
							1	1	1												**PP01061**
										1	1	1									**PP01062**
													1	1	1						**PP01063**
																1	1	1			**PP01123** ②
																			1	1	**PP01080** ③

Notes

① I_L only; has no corresponding I_H rated hp rating.
② PP00061 capacitor not included in main fan; please order separately.
③ PP00011 capacitor not included in main fan; please order separately.

Replacement Parts—FR4–FR9 9000X Drives, 380–500V, continued

Frame:	4						5			6			7			8			9		Catalog
hp (I_H):	1	1-1/2	2	3	5	7-1/2 ①	7-1/2	10	15	20	25	30	40	50	60	75	100	125	150	200	Number
Cooling Fans, continued																					
	1	1	1	1	1	1															**PP01086**
							1	1	1												**PP01088**
										1	1	1	1	1	1						**PP01049**
																1	1	1			**CP01180**
																			1 ②	2	**PP01068**
																			1	1	**PP09051**
IGBT Modules																					
	1	1	1																		**CP01304**
				1	1																**CP01305**
						1	1														**CP01306**
								1													**CP01307**
									1												**CP01308**
										1	1										**PP01022**
												1									**PP01023**
													1								**PP01024**
														1							**PP01025**
															1						**PP01029**
																1					**PP01026**
																	1	1			**PP01027**
Chopper/Rectifiers																					
										1	1										**CP01367**
												1									**CP01368**
Diode/Thyristor Modules																					
													3	3	3						**PP01035**
																3	3	3			**CP01268**
																			3	3	**PP01037**
Rectifying Boards																					
													1	1	1						**VB00242**
																1	1	1			**VB00227**
																			1	1	**VB00459**
Rectifying Module Sub-Assembly																					
																			1	1	**FR09810**
Power Module Sub-Assemblies																					
																			1		**FR09-150-4-ANS** ③
																				1	**FR09-200-4-ANS** ③

Notes

① I_L only; has no corresponding I_H rated hp rating.
② For FR9 NEMA Type 12 you need two PP01068 internal fans.
③ See **Page 124** for details.

FR10–FR12, 380–500V

Replacement Parts—FR10–FR12 9000X Drives, 380–500V

Frame:	10			11			12			Catalog Number
hp (I_H):	250	300	350	400	500	550	600	650	700	
Control Board										
	1	1	1	1	1	1	1	1	1	**VB00561**
Shunt Boards										
	6									**VB00537**
		6								**VB00497**
			6				12	12	12	**VB00498**
				9						**VB00538**
					9					**VB00513**
						9				**VB00514**
Driver Boards										
				3	3	3				**VB00489**
	1	1	1				2	2	2	**VB00487**
Driver Adapter Board										
	1	1	1				2	2	2	**VB00330**
ASIC Board										
	1	1	1	1	1	1	2	2	2	**VB00451**
Feedback Interface Board										
							2	2	2	**VB00448**
Star Coupler Board										
							1	1	1	**VB00336**
Power Modules										
	1	1	1	2	2	2	2	2	2	**FR10820** ①
	2	2	2							**FR10828**
	1									**FR10-250-4-ANS** ②
		1								**FR10-300-4-ANS** ②
			1				2	2	2	**FR10-350-4-ANS** ②
				3						**FR11-400-4-ANS** ②
					3					**FR11-500-4-ANS** ②
						3				**FR11-550-4-ANS** ②

Notes

① Rectifying board not included.

② See **Page 124** for details.

Replacement Parts—FR10–FR12 9000X Drives, 380–500V, continued

Frame:	10			11			12			Catalog Number
hp (I_H):	250	300	350	400	500	550	600	650	700	
	Electrolytic Capacitors									
	2	2	2	3	3	3	4	4	4	**PP00060**
	12	12	12	18	18	18	24	24	24	**PP01005**
	Fuses									
	1	1	1	1	1	1	2	2	2	**PP01094**
	2	2	2	2	2	2	4	4	4	**PP01095**
	Cooling Fans and Isolation Transformers									
	2	2	2	3	3	3	4	4	4	**VB00299**
	2	2	2	3	3	3	4	4	4	**PP01080** ①
	2	2	2				4	4	4	**PP01068**
	1	1	1	1	1	1	2	2	2	**PP01096**
	1	1	1				2	2	2	**FR10844**
	1	1	1	3	3	3	2	2	2	**FR10845**
	1	1	1				2	2	2	**FR10846**
	1	1	1	3	3	3	2	2	2	**FR10847**
	Rectifying Board									
	1	1	1	2	2	2	2	2	2	**VB00459**

Note

① PP00060 capacitor not included in main fan; please order separately.

FR6–FR9, 525–690V

Replacement Parts—FR6–FR9 9000X Drives, 525–690V

Frame:	6									7		8			9				
hp (I_H):	2	3	5 ①	5	7-1/2	10	15	20	25	30	40	50	60	75	100	125	150	200 ①	Catalog Number
Control Board																			
	1	1	1	1	1	1	1	1	1	1	1	1	1	1	1	1	1	1	**VB00252** (for SVX)
	1	1	1	1	1	1	1	1	1	1	1	1	1	1	1	1	1	1	**VB00561** (for SPX)
Driver Board																			
	1																		**VB00404-0004-6**
		1																	**VB00404-0005-6**
			1																**VB00404-0007-6**
				1															**VB00404-0010-6**
					1														**VB00404-0013-6**
						1													**VB00404-0018-6**
							1												**VB00404-0022-6**
								1											**VB00404-0027-6**
									1										**VB00404-0034-6**
Power Boards																			
	1	1	1	1	1	1	1	1	1										**VB00414**
										1									**VB00419-0041-6**
											1								**VB00419-0052-6**
												1							**VB00422-0062-6**
													1						**VB00422-0080-6**
														1					**VB00422-0100-6**
Power Modules																			
															1				**FR09-100-5-ANS** ②
																1			**FR09-125-5-ANS** ②
																	1		**FR09-150-5-ANS** ②
																		1	**FR09-175-5-ANS** ②
Electrolytic Capacitors																			
	2	2	2	2	2	2	2	2	2										**PP01093**
										2	2	4	4		8	8	8	8	**PP01041**
														4					**PP01040**
Fuses																			
												1	1	1	1	1	1	1	**PP01094**
												2	2	2	2	2	2	2	**PP01095**

Notes

① I_L only; has no corresponding I_H rated hp rating.

② See **Page 124** for details.

Replacement Parts—FR6–FR9 9000X Drives, 525–690V, continued

Frame:	6									7		8			9				Catalog
hp (I_H):	2	3	5 ①	5	7-1/2	10	15	20	25	30	40	50	60	75	100	125	150	200 ①	Number
Cooling Fans																			
	1	1	1	1	1														**PP01061**
						1	1	1	1										**PP01062**
										1	1								**PP01063**
												1	1	1					**PP01123**
	1	1	1	1	1	1	1	1	1	1	1								**PP01049**
												1	1	1					**CP01180**
															1	1	1	1 ②	**PP01068**
															1	1	1	1	**PP01080**
Fan Power Supply																			
																1	1	1	**VB00299**
IGBT Modules																			
	3	3	3	3	3	3	3	3	3										**PP01091**
										1	1								**PP01089**
												1	1	1					**PP01127**
IGBT/Diode (Brake)																			
	1	1	1	1	1	1	1	1	1	1	1	2	2	2	2	2	2	2	**PP01040**
Diode Module																			
	1	1	1	1	1	1	1	1	1										**PP01092**
Diode/Thyristor Modules																			
										3	3								**PP01071**
															3	3	3	3	**PP01072**
Rectifying Boards																			
										1	1								**VB00442**
															1	1	1	1	**VB00460**
Rectifying Module Sub-Assemblies																			
																1	1	1	**FR09810**
																1	1	1	**FR09811**

Notes

① I_L only; has no corresponding I_H rated hp rating.

② For NEMA Type 12, two PP01068 internal fans are needed.

FR10–FR12, 525–690V

Replacement Parts—FR10–FR12 9000X Drives, 525–690V

Frame:	10			11			12			Catalog Number
hp (I_H):	200	250	300	400	450	500	550	600	700	
Control Board										
	1	1	1	1	1	1	1	1	1	**VB00561**
Shunt Boards										
	6									**VB00545**
		6								**VB00510**
			6				12	12	12	**VB00511**
				9						**VB00546**
					9					**VB00547**
						9				**VB00512**
Driver Boards										
	1	1	1				2	2	2	**VB00487**
				3	3	3				**VB00489**
Driver Adapter Board										
	1	1	1				2	2	2	**VB00330**
ASIC Board										
	1	1	1	1	1	1	2	2	2	**VB00451**
Feedback Interface Board										
							2	2	2	**VB00448**
Star Coupler Board										
							1	1	1	**VB00336**
Power Modules										
	1	1	1	2	2	2	2	2	2	**FR10821** ①
	2	2	2							**FR10829**
	1									**FR10-200-5-ANS** ②
		1								**FR10-250-5-ANS** ②
			1				2	2	2	**FR10-300-5-ANS** ②
				3						**FR11-400-5-ANS** ②
					3					**FR11-450-5-ANS** ②
						3				**FR11-500-5-ANS** ②
Electrolytic Capacitors										
	2	2	2	3	3	3	4	4	4	**PP00060**
	12	12	12	18	18	18	24	24	24	**PP01099**

Notes

① Rectifying board not included.

② See **Page 124** for details.

Replacement Parts—FR10–FR12 9000X Drives, 525–690V, continued

Frame:	10			11			12			Catalog Number
hp (I_H):	200	250	300	400	450	500	550	600	700	
	Fuses									
	1	1	1	1	1	1	2	2	2	**PP01094**
	2	2	2	2	2	2	4	4	4	**PP01095**
	Cooling Fans and Isolation Transformers									
	2	2	2	3	3	3	4	4	4	**VB00299**
	2	2	2	3	3	3	4	4	4	**PP01080** ①
	2	2	2				4	4	4	**PP01068**
	1	1	1	1	1	1	2	2	2	**PP01096**
	1	1	1				2	2	2	**FR10844**
	1	1	1	3	3	3	2	2	2	**FR10845**
	1	1	1				2	2	2	**FR10846**
	1	1	1	3	3	3	2	2	2	**FR10847**
	Fan Power Supply									
							1	1	1	**VB00299**
	Rectifying Boards									
	1	1	1	2	2	2	2	2	2	**VB00460**

Power Module

Catalog Number Selection

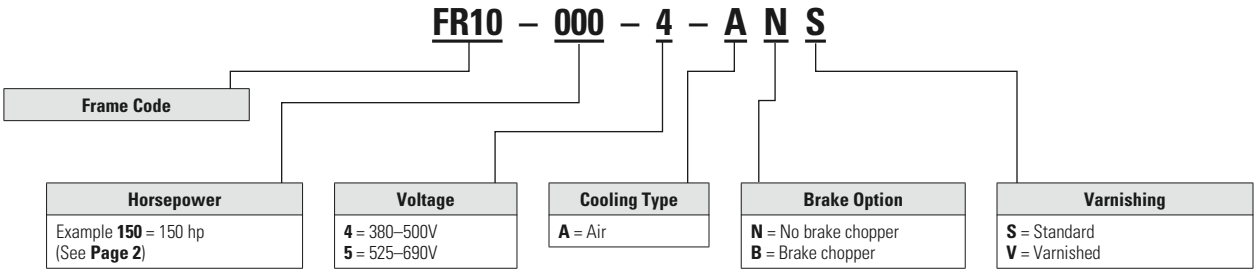

Note

① PP00060 capacitor not included in main fan; please order separately.

Eaton's Electrical Sector is a global leader in power distribution, power quality, control and automation, and monitoring products. When combined with Eaton's full-scale engineering services, these products provide customer-driven PowerChain™ solutions to serve the power system needs of the data center, industrial, institutional, public sector, utility, commercial, residential, IT, mission critical, alternative energy and OEM markets worldwide.

PowerChain solutions help enterprises achieve sustainable and competitive advantages through proactive management of the power system as a strategic, integrated asset throughout its life cycle, resulting in enhanced safety, greater reliability and energy efficiency. For more information, visit www.eaton.com/electrical.

Eaton Corporation
Electrical Sector
1111 Superior Ave.
Cleveland, OH 44114
United States
877-ETN-CARE (877-386-2273)
Eaton.com

©2011 Eaton Corporation
All Rights Reserved
Printed in USA
Publication No. MN04001004E / Z10673
May 2011

Powering Business Worldwide

Eaton is a registered trademark of Eaton Corporation. All other trademarks are property of their respective owners.

Non-Contact Interlock/Position Switch

151 & 153 GuardSwitch

Applications

- Packaging Machines
- Food Processing Machines
- Waste Compactors
- Mixers, Blenders, and Dryers

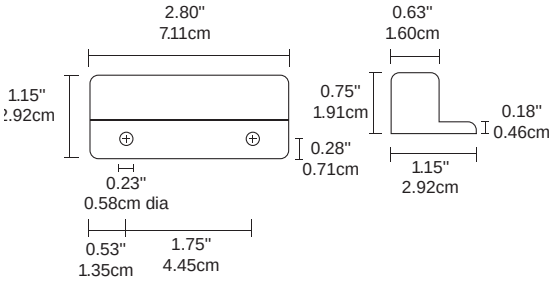

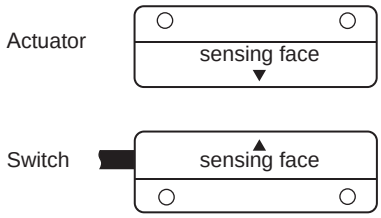

General Specifications

Enclosure	Polyurethane Enamel-Coated Aluminum
Temperature Range	-40°F to 180°F (-40°C to 80°C)
Environmental	Hermetically Sealed Contact Switch Encapsulated in Polyurethane
NEMA Rating	4, 4X, 5, 6, 12, 12K
Protection Class	IP 67
Response Time	1 msec; 10 msec (150VA)
Life Cycles	100,000 Under Full Load; Up to 200,000,000 Under Dry Circuit Load
Types/O.D.	18/2 SJTOW (K) / 0.30" (0.76cm)
(Armored cable available)	18/4 SJTOW (K) / 0.34" (0.86cm)
UL/CSA	All Models

File E 122942 LR89176

Order Information Electrical Specifications

Part Number[1]	Contact[2] Config.	Load Rating AC	Load Rating DC	Switching Voltage, Max. AC	Switching Voltage, Max. DC	Switching Current, Max. AC	Switching Current, Max. DC	Contact Resistance	Sense Range[3] Nominal	Break Range Nominal	Lead Length
151-6Z-06K	N.O.	25VA	25W	120V (@0.2A)	120V (@0.2A)	0.7A (@35V)	1.0A (@25V)	0.2 Ohms	1.5" (3.8cm)	2.0" (5.1cm)	6' (1.8m)
151-6Z-12K	N.O.	25VA	25W	120V (@0.2A)	120V (@0.2A)	0.7A (@35V)	1.0A (@25V)	0.2 Ohms	1.5" (3.8cm)	2.0" (5.1cm)	12' (3.6m)
151-7Z-06K	N.O.	100VA	84W	120V (@0.8A)	28V (@3.0A)	3.0A (@34V)[4]	3.0A (@28V)[4]	1.0 Ohms	1.2" (3.0cm)	1.8" (4.6cm)	6' (1.8m)
153-7Z-06K	N.O.	100VA	84W	120V (@0.8A)	28V (@3.0A)	3.0A (@34V)[4]	3.0A (@28V)[4]	1.0 Ohms	1.2" (3.0cm)	1.8" (4.6cm)	6' (1.8m)
151-7Z-12K	N.O.	100VA	84W	120V (@0.8A)	28V (@3.0A)	3.0A (@34V)[4]	3.0A (@28V)[4]	1.0 Ohms	1.2" (3.0cm)	1.8" (4.6cm)	12' (3.6m)
153-7Z-12K	N.O.	100VA	84W	120V (@0.8A)	28V (@3.0A)	3.0A (@34V)[4]	3.0A (@28V)[4]	1.0 Ohms	1.2" (3.0cm)	1.8" (4.6cm)	12' (3.6m)
151-7Z-06K-D3	DPST,N.O.,N.C.	100VA	84W	120V (@0.8A)	28V (@3.0A)	3.0A (@28V)[4]	3.0A (@28V)[4]	1.0 Ohms	1.2" (3.0cm)	1.8" (4.6cm)	6' (1.8m)
151-8Z-12K	N.O.	150VA	NA	120V (@0.8A)	NA	1.25A (@120V)[5]	NA	NA	1.4" (3.5cm)	2.1" (5.3cm)	12' (1.8m)
150-Z	Actuator Only										

Warning— Each electrical rating is an individual maximum and cannot be exceeded!

1 The part number 153 is the same as 151 in all respects except the cable exits 151 left and 153 right.
2 Configuration with actuator away from the switch
3 Proximity of ferrous materials usually reduces sense range — typically by 50%. The shape and type of material cause a wide diversity of effects. Testing is required to determine actual sense range for specific applications.
4 Rated at 3.0A for 6,000 cycles only. Other ratings are at 100,000 cycles.
5 Can withstand inrush surge up to 4 amps. Voltage Drop 1.5V, minimum switch current, 30mA, triac output.

Liberty Pumps®

FL150-Series

1-1/2hp

Submersible Effluent Pumps

1-1/2" or 2" Discharge

Flange Mounted

POWDER COATED TOUGH™

3 Year Warranty

Features:

- 3/4" Solids-handling
- Heavy cast iron construction
- Semi-open cast iron impeller
- Stainless steel rotor shaft
- Dual shaft seals
- Single float, mercury free level control
- Additional mounting clamp provided for optional switch mounting to pipe
- Fully adjustable pumping range
- 2" FNPT threaded discharge with 1-1/2" FNPT flange provided
- Quick-disconnect power cord - 25' length standard
- Available in automatic and manual models

Dual Sized Discharge

1-1/2" or 2"

innovate. evolve.

FL150-Series

Technical Specifications

External Construction:

Pump Volute – Gray iron casting class 25
Pump Legs – Gray iron casting class 25
Motor Cover – Gray iron casting class 25
All casting shall be powder coated for corrosion resistance prior to assembly.

Motor:

Submersible 3450 RPM, oil filled and hermetically sealed. Class B insulation rating. FL150, 303 stainless steel rotor shaft. Thermally protected – single phase models. Three phase models shall have overloads incorporated into the control panel, properly sized for the horsepower and amperage of the pump.

Impeller:

Semi-open design. Cast iron construction.

Dual Shaft Seals:

FL150-Series feature upper unitized silicon carbide, lower Viton double lip.

Fasteners:

All fasteners shall be 300-series stainless steel.

Power Cord:

25' length standard. Quick-disconnect design allows easy field replacement. (35' and 50' available on 3-phase)

Level Control:

The pump shall be controlled by a wide angle mechanical float sealed in a PVC housing. The float shall have a series plug for manual by-pass operation.

A water-stop seal shall be incorporated into the cord entry to eliminate potential water wicking into the switch.

An adjustable clamp is provided for optional pipe mounting of the float.

Discharge:

2" FNPT with 1-1/2" FNPT cast iron flange provided.

Maximum Fluid Temperature:

104° F (40° C) Continuous Duty
140°F (60° C) Intermittent

Models	hp.	Volts	Phase	Amps	Discharge	Automatic	Cord Length	Wgt. Lbs.
FL152M-2	1-1/2	208-230	1	15	1-1/2" & 2"	No	25'	81
FL152A-2	1-1/2	208-230	1	15	1-1/2" & 2"	Yes	25'	82
FL153M-2	1-1/2	208/230	3	11.4	1-1/2" & 2"	No	25'	81
FL154M-2	1-1/2	440-480	3	5.7	1-1/2" & 2"	No	25'	81
FL155M-2	1-1/2	575	3	4.9	1-1/2" & 2"	No	25'	81

NOTE: 3-phase models require a control panel for automatic operation. See control panel literature for complete specifications on panels. 35' and 50' cord options available on 3-phase models. Add "-3" suffix or "-5" suffix to model number. Example: FL153M-3 for 35' cord, FL153M-5 for 50' cord.

60 hz Performance Curve FL150-Series

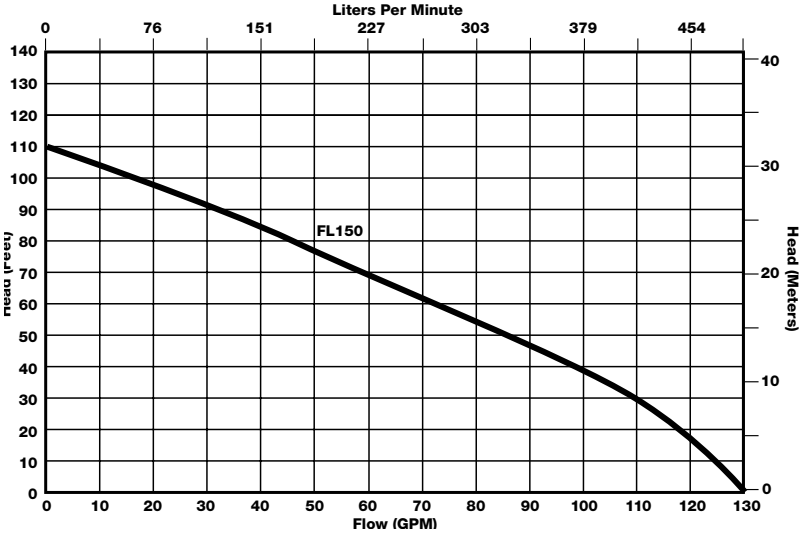

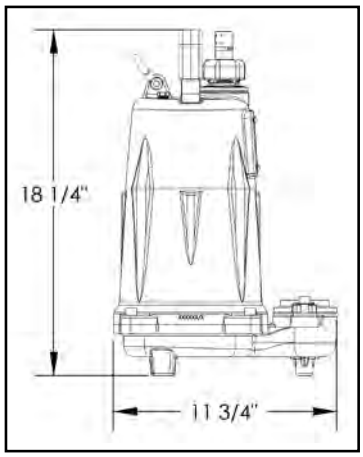

Specifications subject to change without notice.

Liberty Pumps • 7000 Apple Tree Avenue • Bergen, New York 14416 • Phone 800-543-2550 Fax (585) 494-1839
www.libertypumps.com

Copyright © Liberty Pumps, Inc. 2017
All rights reserved. LLIT6770-R10/17

Liberty Pumps®

A Family and Employee Owned Company

Installation **Manual**

7035000P

Submersible Dewatering/Effluent Pumps

Models

250-Series	*1/3 hp*
280-Series	*1/2 hp*
290-Series	*3/4 hp*
FL30-Series	*1/3 hp*
FL50-Series	*1/2 hp*
FL60-Series	*6/10 hp*
FLH60-Series	*6/10 hp*
FL70-Series	*3/4 hp*
FL100-Series	*1 hp*
FL150-Series	*1-1/2 hp*
FL200-Series	*2 hp*

7000 Apple Tree Avenue
Bergen, NY 14416
ph: 800-543-2550
fax: 585-494-1839
www.LibertyPumps.com

Copyright © Liberty Pumps, Inc. 2019 All rights reserved.

Contents

Safety Precautions . . . . . 3 | EN
General Information . . . . . 4 | EN
Operating Constraints . . . . . 4 | EN
Model Specifications . . . . . 4 | EN
Inspection and Storage . . . . . 4 | EN
Pump Design . . . . . 5 | EN
Pump System Components . . . . . 5 | EN
Preparation . . . . . 6 | EN
Installation . . . . . 7 | EN
Operation . . . . . 9 | EN
Maintenance and Troubleshooting . . . . . 10 | EN
Warranty . . . . . 12 | EN

Safety Guidelines

⚠	This safety alert symbol is used in the manual and on the pump to alert of potential risk for serious injury or death.
⚠	This safety alert symbol identifies **risk of electric shock**. It is accompanied with an instruction intended to minimize potential risk of electric shock.
⚠	This safety alert symbol identifies **risk of fire**. It is accompanied with an instruction intended to minimize potential risk of fire.
⚠	This safety alert symbol identifies **risk of serious injury or death**. It is accompanied with an instruction intended to minimize potential risk of injury or death.
⚠ DANGER	Warns of hazards which, if not avoided, **will** result in serious injury or death.
⚠ WARNING	Warns of hazards which, if not avoided, **could** result in serious injury or death.
⚠ CAUTION	Warns of hazards which, if not avoided, **could** result in minor or moderate injury.
NOTICE	Signals an important instruction related to the pump. Failure to follow these instructions could result in pump failure or property damage.

⚠ WARNING	**Read every supplied manual before using pump system. Follow all the safety instructions in manual(s) and on the pump. Failure to do so could result in serious injury or death.**
NOTICE	**Installer: manual must remain with owner or system operator/maintainer.**

Keep this manual handy for future reference.

For replacement manual, visit LibertyPumps.com, or contact Liberty Pumps at 1-800-543-2550.

Retain dated sales receipt for warranty.

Record information from pump nameplate:

Pump Model #: _____

Pump Serial #: _____

Manufacture Date: _____

Install Date: _____

Copyright © Liberty Pumps, Inc. 2019 All rights reserved.

Safety Precautions

WARNING **RISK OF ELECTRIC SHOCK**

- Accidental contact with electrically live parts, items, fluid, or water can cause serious injury or death.
- Always disconnect pump(s) from power source(s) before handling or making any adjustments to either the pump(s), the pump system, or the control panel.
- All installation and maintenance of pumps, controls, protection devices, and general wiring shall be done by qualified personnel.
- All electrical and safety practices shall be in accordance with the National Electrical Code®, the Occupational Safety and Health Administration, or applicable local codes and ordinances.
- Do not remove cord and strain relief, and do not connect conduit to pump.
- Pump shall be properly grounded using its supplied grounding conductor. Do not bypass grounding wires or remove ground prong from attachment plugs. Failure to properly ground the pump system can cause all metal portions of the pump and its surroundings to become energized.
- Do not handle or unplug the pump with wet hands, when standing on damp surface, or in water unless wearing Personal Protective Equipment.
- Always wear dielectric rubber boots and other applicable Personal Protective Equipment (PPE) when water is on the floor and an energized pump system must be serviced, as submerged electrical connections can energize the water. Do not enter the water if the water level is higher than the PPE protection or if the PPE is not watertight.
- Do not lift or carry a pump or a float assembly by its power cord. This will damage the power cord, and could expose the electrically live wires inside the power cord.
- The electrical power supply shall be located within the length limitations of the pump power cord, and for below grade installations it shall be at least 4 ft (1.22 m) above floor level.
- Do not use this product in applications where human contact with the pumped fluid is common (such as swimming pools, fountains, marine areas, etc.).
- Protect the power and control cords from the environment. Unprotected power and control (switch) cords can allow water to wick through ends into pump or switch housings, causing surroundings to become energized.
- Single-phase 208/230V pumps shall only be operated without the float switch by using the circuit breaker or panel disconnect.

WARNING **RISK OF FIRE**

- Do not use an extension cord to power the product. Extension cords can overload both the product and extension cord supply wires. Overloaded wires will get very hot and can catch on fire.
- This product requires a separate, properly fused and grounded branch circuit, sized for the voltage and amperage requirements of the pump, as noted on the nameplate. Overloaded branch circuit wires will get very hot and can catch on fire. When used, electrical outlets shall be simplex of the appropriate rating.
- For cord replacement: power cord must be of the same length and type as originally installed on the Liberty Pumps product. Use of incorrect cord may lead to exceeding the electrical rating of the cord and could result in death, serious injury, or other significant failure.
- Do not use this product with or near flammable or explosive fluids such as gasoline, fuel oil, kerosene, etc. If rotating elements inside pump strike any foreign object, sparks may occur. Sparks could ignite flammable liquids.
- Sewage and effluent systems produce and may contain flammable and explosive gases. Prevent introduction of foreign objects into basin as sparks could ignite these gases. Exercise caution using tools and do not use electronic devices or have live, exposed electrical circuits in or around basins, open covers and vents.
- Manual pumps that have been factory constructed with a power cord with no male attachment plug must use an approved motor control panel. Do not wire a switch in series with the pump power cord as this can overload the wires. Overloaded wires get very hot and can catch on fire.
- These pumps are not to be installed in locations classified as hazardous in accordance with the National Electric Code®, ANSI/NFPA 70.

WARNING **RISK OF SERIOUS INJURY OR DEATH**

- Do not modify the pump/pump system in any way. Modifications may affect seals, change the electrical loading of the pump, or damage the pump and its components.
- All pump/pump system installations shall be in compliance with all applicable Federal, State, and Local codes and ordinances.
- Do not allow children to play with the pump system.
- Do not allow any person who is unqualified to have contact with this pump system. Any person who is unaware of the dangers of this pump system, or has not read this manual, can easily be injured by the pump system.
- In 208/230V installations, one side of the line going to the pump is always “hot”, whether the float switch is on or off. To avoid hazards, install a double pole disconnect near the pump installation.
- Vent basin in accordance with local code. Proper venting of sewer and effluent gases alleviates poisonous gas buildup and reduces the risk of explosion and fire from these flammable gases.
- Wear adequate Personal Protective Equipment when working on pumps or piping that have been exposed to wastewater. Sump and sewage pumps often handle materials that can transmit illness or disease upon contact with skin and other tissues.
- Do not enter a pump basin after it has been used. Sewage and effluent can emit several gases that are poisonous.

Copyright © Liberty Pumps, Inc. 2019 All rights reserved.

- Do not remove any tags or labels from the pump or its cord.
- Keep clear of suction and discharge openings. To prevent injury, never insert fingers into pump while it is connected to a power source.
- Do not use this product with flammable, explosive, or corrosive fluids. Do not use in a flammable and/or explosive atmosphere as serious injury or death could result.
- This product contains chemicals known to the State of California to cause cancer and birth defects or other reproductive harm. www.p65warnings.ca.gov.

NOTICE

- Verify 3-phase pumps for correct rotation prior to installing pump(s) in basin. To change rotation, reverse any two of the three power leads to the pump (not the ground). Code the wires for reconnection after installation.
- Do not dispose of materials such as paint thinner or other chemicals down drains. Doing so could chemically attack and damage pump system components and cause product malfunction or failure.
- Do not use pumps with fluid over 140°F (60°C). Operating the pump in fluid above this temperature can overheat the pump, resulting in pump failure.
- Do not use pump system with mud, sand, cement, hydrocarbons, grease, or chemicals. Pump and system components can be damaged from these items causing product malfunction or failure. Additionally, flooding can occur if these items jam the impeller or piping.
- Do not introduce any consumer item that is not toilet paper into a non-grinder (dewatering/effluent or sewage) pump/pump system. This includes, but is not limited to the following: feminine products, wipes, towels, towelettes, dental floss, swabs, pads, etc. Items such as these put the pump under undo strain and can result in pump/pump system failure. Additionally, it creates conditions for discharge line blockage.
- Do not run dry.
- Do not exert heavy pressure or run heavy equipment on the backfill material as this could cause the tank to collapse.
- Do not position the pump float directly under the inlet from drain tile or in the direct path of any incoming water.
- Keep pump upright.
- Do not allow pump to freeze.
- At no time shall the pump be stored within an incomplete wet basin. The pump shall not be placed into the basin until it can be fully operational.
- Effluent pumps need to be totally submerged below the water line to prevent pump corrosion.

General Information

Before installation, read these instructions carefully. Each pump is individually factory tested to ensure proper performance. Closely following these instructions will eliminate potential operating problems, assuring years of trouble-free service.

These pumps are to be used for handling septic tank effluent and drain (storm) water.

Provide pump serial number in all correspondence.

Pumps are certified to CSA® and UL® standards.

Pumps must be serviced at a qualified repair facility approved by Liberty Pumps. No repair work should be carried out during the warranty period without prior factory approval. Any unauthorized field repairs void warranty. Contact Liberty Pumps at 1-800-543-2550 to locate the closest authorized service center.

Operating Constraints

It is extremely important to verify that the pump has been sized correctly for the intended installation. The operating point of the pump must lie within the acceptable range as outlined by the applicable Liberty Pumps performance chart. Operating the pump outside of the recommended range can invalidate the CSA Certification of the pump and can also cause damage and premature failure. Operating outside of the recommended range can cause the pump to exceed its rated nameplate amp draw, which will void the pump certification. It can also cause motor overheating, cavitation, excessive vibration, clogging, and poor energy efficiency.

Model Specifications

For complete listing of pump models and their specifications, refer to http://www.LibertyPumps.com/About/Engineering-Specs. Pump nameplate provides a record of specific pump information.

Inspection and Storage

Initial Inspection

Inspect pump immediately for damage that may have occurred in shipment.

1. Visually check the pump and any spare parts for damage.
2. Check for damaged electrical wires, especially where they exit the motor housing.

Contact Liberty Pumps customer service to report any damage or shortage of parts.

Copyright © Liberty Pumps, Inc. 2019 All rights reserved.

Storage Before Use

WARNING ⚠ **RISK OF ELECTRIC SHOCK**

- Protect the power and control cords from the environment. Unprotected power and control (switch) cords can allow water to wick through ends into pump or switch housings, causing surroundings to become energized.

NOTICE

- At no time shall the pump be stored within an incomplete wet basin. The pump shall not be placed into the basin until it can be fully operational.
- Do not allow the pump to freeze.

Pumps are shipped from the factory ready for installation and use. Hold the pump in storage if the pump station is not complete.

If storage is necessary, the pump should remain in its shipping container. It should be stored in a warehouse or storage shed that has a clean, dry temperature-stable environment where the pump and its container are covered to protect it from water, dirt, vibration, etc. The cord ends must be protected against moisture.

Uninstalled pumps that are idle for greater than three months should have impellers manually rotated once a month to lubricate the seals.

Installed pumps that are idle for greater than one month should have impellers manually operated through the breaker panel once a month to lubricate the seals. For **automatic models**, turn off the breaker, unplug the piggyback switch, and plug the pump directly into the wall socket. Turn the breaker on for 30 seconds, then turn the breaker off. Plug the piggyback switch back in. Refer to ***Piggyback Switch Operation*** on page 7.

Pump Design

All Liberty Pumps dewatering/effluent pumps come equipped with an air bleed hole in the base of the pump to help prevent airlock. A small spray of water from this hole is normal while pump is running.

For added protection, consider the addition of a back-up pump, as well as an alarm in applications where loss of pump function could result in property damage. If an alarm is used, it must be connected to a separate electrical circuit.

Pump System Components

Control Panel

Manual models ("***M***" suffix) and 3-phase models require a separate, approved pump control device or panel for automatic operation. Operation will be according to the control panel selected. Refer to separate manufacturer's instructions supplied with the unit. Verify the electrical specifications for the control panel properly match those of the pump. 3-phase models require overload elements selected or adjusted in accordance with the control or panel instructions.

Mounting, installation, and wiring connections are specific to the control panel used. Refer to the manufacturer's instructions supplied with the unit.

IMPORTANT: When connecting a new pump to an existing control panel, verify the panel is correctly sized and equipped for the pump.

Control panels designed for use with specific pumps available from Liberty Pumps can be found at http://www.LibertyPumps.com/Portals/0/Files/panel_selection_guide.pdf or contact Liberty Pumps.

Float Switches

WARNING ⚠ **RISK OF ELECTRIC SHOCK**

- Single-phase 208/230V pumps shall only be operated without the float switch by using the circuit breaker or panel disconnect.

Automatic Models

All FL-Series automatic models ("***A***" suffix) and Models 253, 283 and 293 come factory-equipped with a float switch mounted to the pump. These models come with two cords—one to the float switch and the other to the pump motor. The switch cord has a series (piggyback) plug enabling the pump motor cord to be plugged into the back of it. The purpose of this design is to allow temporary manual operation of the pump.

For manual operation, or in the event of float switch failure, the pump cord can be separated and plugged into the electrical outlet, directly bypassing the switch. Refer to ***Piggyback Switch Operation*** on page 7.

If using a differential other than the factory setting, verify that when the pump turns off, the minimum fluid level left in the basin is per Table 1 so the impeller remains submerged. A minimum cord length of 3-1/2" from the tether point to the top surface of the float is required for proper switch operation.

Models 251, 257, 281, 287, 291, and 297 have factory-preset float switches that are not adjustable. Other pumping differentials may be obtained by tethering the switch cord to the discharge pipe.

Switchless (Manual) Models

Manual pumps with no float switch are intended to be run using an approved liquid level control or approved motor control with correct rating that matches motor input in full load amperes. Regardless of the control type, verify that when the pump shuts off, the minimum fluid level left in the basin is per Table 1 so the impeller remains submerged.

IMPORTANT: Manual pumps factory constructed with a power cord with no male attachment plug must use an approved motor control panel. ***Do not wire a switch in series with the pump power cord.***

Automatic operation with optional control devices: if the pump(s) are to be operated by either a simplex or duplex control panel or other optional control device, follow the manufacturer's instructions provided with the control panel for power connections.

Copyright © Liberty Pumps, Inc. 2019 All rights reserved.

Float Switch Settings

Table 1 includes factory set float levels for automatic models. The turn OFF level must be maintained as it is the ***minimum*** water depth to ensure proper cooling. Manual pumps have user-set turn ON levels.

Table 1. Factory Set Float Switch Settings

Model	Turn OFF Level	Turn ON Level
250	4″	*user-set*
251, 253	4″	11″
257	4″	7″
280	4″	*user-set*
281, 283	7″	13″
287	4″	9.5″
290	4″	*user-set*
291, 293	7″	13″
297	4″	9.5″
FL30	5″	12″
FL50	6″	13″
FL60	6″	13″
FL70	6″	13″
FLH60	6″	13″
FL100	8″	15″
FL150	8″	15″
FL200	8″	15″

Preparation

WARNING **RISK OF ELECTRIC SHOCK**

- Always disconnect pump(s) from power source(s) before handling or making any adjustments to either the pump(s), the pump system, or the control panel.

The basin required for effluent applications must be sealed and vented to meet health and plumbing code requirements. Proper basin size and materials for effluent applications vary depending on the type of effluent system and local codes. Check local codes prior to purchasing and installing the basin. Follow the manufacturer's recommended guidelines for installation of the basin. A minimum diameter of 18" and depth of 24" is required for proper pump operation, but larger basins are preferred for longer pump cycles and increased float switch life. Installation should be at a sufficient depth to ensure that all plumbing is below the frost line. If this is not feasible, size the basin and/or adjust the pump differential to accommodate the additional backflow.

For ordinary ground water pumping applications, it is recommended that the sump basin diameter be a ***minimum*** of 14″. Vertical Magnetic Float (VMF) models 257, 287, and 297 may be used in a ***minimum*** 10″ diameter sump; however, a larger diameter basin is preferred as it allows for a longer pump cycle and reduced float switch cycling. The depth of the basin should be a ***minimum*** of 18″.

Prepare Existing Sump [Basin]

If replacing a previously installed pump, prepare the basin by removing the old pump and cleaning any debris from the basin. Inspect all remaining equipment in the basin including piping, valves, and electrical junction boxes (if present) and repair or replace as appropriate.

If the basin is not already enclosed on the bottom, provide a hard level bottom of bricks or concrete. Do not place the pump directly on earth, gravel, or debris since this can cause excessive wear of the impeller and possible jamming.

"The Brick" (Liberty Pumps #4445000) is a pre-molded stable platform designed to fit the 250, 280, and 290-Series submersible pumps. It raises the pump 2-1/2″ off the bottom of the basin, reducing the potential for jamming from rocks and debris. Contact a local distributor to order.

Prepare New Sump [Basin]

Excavation

WARNING **RISK OF SERIOUS INJURY OR DEATH**

- Locate all overhead and underground utilities before excavating.

Excavate the hole as small as possible, with a minimum recommended 8″ diametrical clearance around the tank. Never place the basin directly in contact with rocks or other sharp objects. Place only fine, 1/8″ to 3/4″ pea gravel or 1/8″ to 1/2″ washed, crushed stone as bedding between the basin and the hole walls. Do not use sand or native soil as backfill. Properly compact underneath the basin to provide a solid, level base that can support the weight of the filled basin.

Inlet Connection & Initial Backfill

Use only fine, 1/8″ to 3/4″ pea gravel or 1/8″ to 1/2″ washed, crushed stone around the bottom of the basin to hold it in place. Do not use sand or native soil as backfill.

Make the inlet connection as required per basin.

Final Backfill

NOTICE

- Do not exert heavy pressure or run heavy equipment on the backfill material as this could cause the tank to collapse.

Keep large rocks, clods, and foreign objects out of the backfill material. Only fine, 1/4″ to 3/4″ pea gravel, or 1/8″ to 1/2″ washed, crushed stone is recommended. Do not use sand or native soil as backfill. Mound the backfill slightly and allow for natural settling. Provide access to the basin cover for maintenance and service.

Compaction of backfill materials must be adequate to ensure the support of the tank, and to prevent movement or settlement.

Copyright © Liberty Pumps, Inc. 2019 All rights reserved.

Installation

WARNING ⚠ **RISK OF ELECTRIC SHOCK**

- All installation and maintenance of pumps, controls, protection devices, and general wiring shall be done by qualified personnel.
- All electrical and safety practices shall be in accordance with the National Electrical Code®, the Occupational Safety and Health Administration, or applicable local codes and ordinances.

Electrical Connections

With main power disconnected, complete pump and control wiring connections per manufacturer's wiring diagrams included with the control panel as applicable. Once connections are made, all wires should be checked for unintentional grounds.

3-Phase Pump Rotation Verification

NOTICE

- Check 3-phase pumps for correct rotation prior to installing pump(s) in basin. To change rotation, reverse any two of the three power leads to the pump (not the ground). Code the wires for reconnection after installation.

3-phase power uses three separate alternating currents that peak at different integrals. With pumps that are powered by three phase electric, the phase sequence of the motor must match the phase sequence of the power source. When the phase sequences match, the pump operates properly.

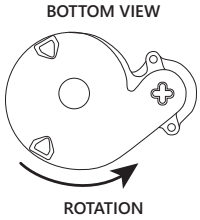

However, when the phases are out of order, the pump runs backward (i.e., the impeller rotates in the wrong direction). This causes an extreme loss of performance and could raise the current draw, which could result in tripping an overload or circuit breaker.

To ensure that the power to the pump is installed correctly, always verify proper rotation ***before*** lowering it into the basin. If the pump is rotating in the wrong direction, turn off the power and reverse any two leads to the pump (not ground). This reverses the phase sequence and corrects the pump rotation. For 3-phase pumps, rotation must be counterclockwise when looking from the bottom of the pump. Label the wires for reconnection after installation.

Guide Rail System

If guide rails are used, refer to the separate instructions supplied with the unit for proper installation and operation, making sure all gaskets and components are present. Liberty Pumps Guide Rail System features a self-aligning mounting bracket. Contact Liberty Pumps for available models, such as GR22 and GR30 for FL-Series models.

If guide rails are not used, complete all pump-mounted plumbing at this time, being sure all gaskets and components are present.

Pump

Record information from pump nameplate onto inside cover of these instructions. Complete a visual inspection before lowering into basin.

Discharge

A check valve is required to prevent the backflow of liquid after each pumping cycle. A gate valve should follow the check valve to allow periodic cleaning of the check valve or removal of the pump. The remainder of the discharge line should be as short as possible with a minimum number of turns to minimize friction head loss. ***Do not reduce the discharge to below that which is provided on the pump.*** Larger pipe sizes may be required to eliminate friction head loss over long runs. Contact Liberty Pumps or other qualified person if questions arise regarding proper pipe size and flow rates.

Vent

Vent basin in accordance with applicable plumbing codes.

Piggyback Switch Operation

WARNING ⚠ **RISK OF ELECTRIC SHOCK**

- Single-phase 208/230V pumps shall only be operated without the float switch by using the circuit breaker or panel disconnect.

IMPORTANT: Verify breaker is turned off before plugging in the switch.

Plug the piggyback switch into the receptacle. The receptacle must be wired to an appropriately sized breaker. Plug the pump into the piggyback receptacle. Install the cable clamp (if supplied) for strain relief.

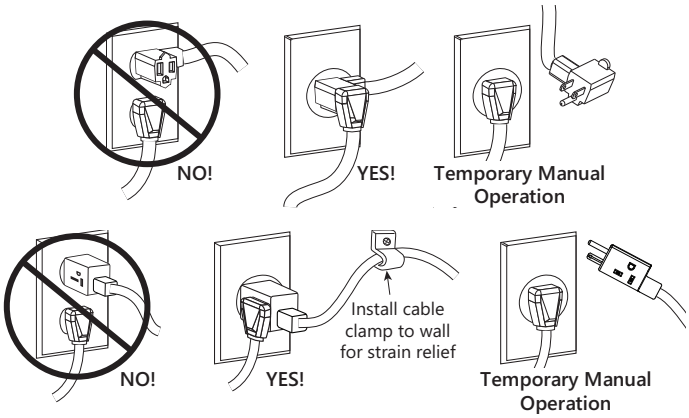

Figure 1. Piggyback Switch Operation

Copyright © Liberty Pumps, Inc. 2019 All rights reserved.

Automatic Pump Direct Wiring

WARNING **RISK OF SERIOUS INJURY OR DEATH**

- In 208/230V installations, one side of the line going to the pump is always "hot", whether the float switch is on or off. To avoid hazards, install a double pole disconnect near the pump installation.

If a 1-phase pump will be wired directly into a junction box, and it is necessary to remove the plug, a certified electrician shall complete the wiring in accordance with the National Electric Code and applicable local codes. A disconnecting means for the pump shall be located in sight from the pump/basin location. See Figure 2 for direct wire installation of 1-phase, automatic pumps.

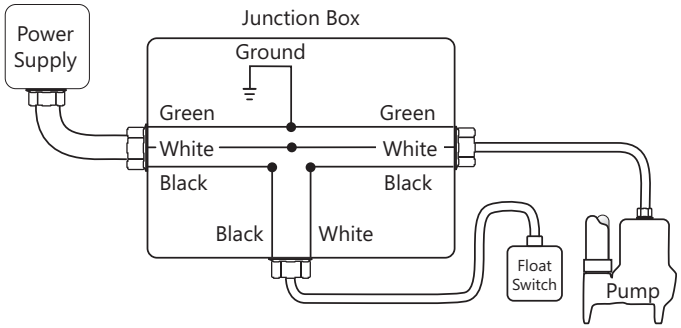

Figure 2. Direct Wiring of 115 V or 208/230 V, 1-Phase, Automatic

Dewatering/Sump System Application

A securable sump basin cover is required for safety and to prevent foreign objects from entering the basin.

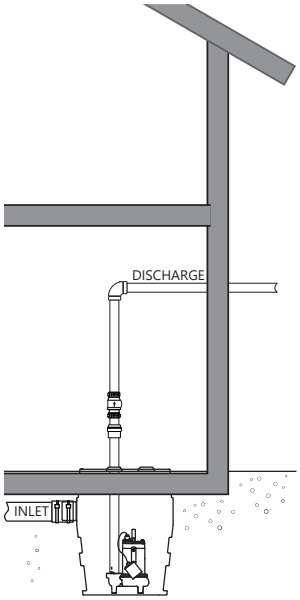

Figure 3. Typical Sump Installation (variations may apply)

1. Place pump in basin making certain the mounting interface (i.e., guide rail, torque stop) is engaged correctly. Float switch must have adequate clearance to side wall of basin and free, unobstructed movement throughout its complete travel and must not contact the pump, piping, or other objects.

   A 1-1/2" threaded discharge is provided for connection of the discharge pipe. **Do not restrict the discharge to below that which is provided on the pump.** Schedule 40 PVC pressure pipe is recommended.

2. Connect discharge pipe to the discharge of the pump. Hand-tighten only. Over-tightening may cause the pump housing to crack.
3. Install a union or other means of separating the discharge line just above the floor to facilitate removal of the pump when necessary. A check valve is ***required*** just above or in place of the union to prevent the backflow of water after each pump cycle.
4. Connect additional piping as needed to direct the discharge to the desired location. Discharge should be kept as short as possible with a minimum number of turns.
5. Check all connections.
6. Check valve usage requires drilling an 1/8" anti-airlock hole in the discharge pipe just above the pump's discharge outlet to prevent pump airlock.

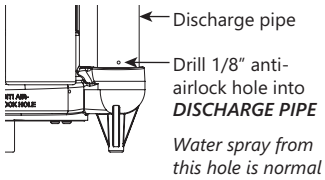

Effluent System Application

VMF models (257, 287, and 297) are <u>*not*</u> recommended for effluent applications due to their short ON/OFF cycle. Wide-angle float models are better suited for effluent applications and are easily adjustable for different ON/OFF levels.

A securable basin cover is required for safety and to prevent foreign objects from entering the basin.

Simplex (One Pump) Systems

NOTICE

- Effluent pumps need to be totally submerged below the water line to prevent pump corrosion.

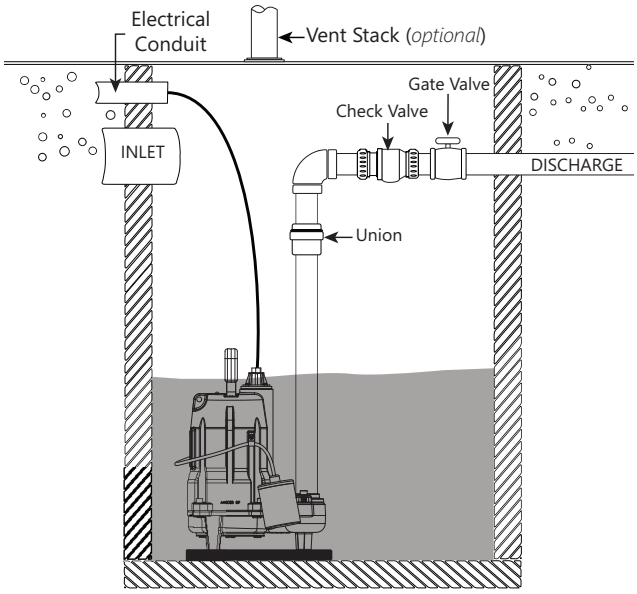

Figure 4. Typical Simplex System Installation (variations may apply)

Copyright © Liberty Pumps, Inc. 2019 All rights reserved.

1. Place pump in basin making certain the mounting interface (i.e., guide rail, torque stop) is engaged correctly. Float switch must have adequate clearance to side wall of basin and free, unobstructed movement throughout its complete travel and must not contact the pump, piping, or other objects.
2. If an optional control device or float is used, follow the separate manufacturer's directions for mounting. Minimum pump turn OFF level must not be set below Table 1 values.
3. Connect the discharge pipe to the pump's threaded discharge. **Do not reduce the discharge pipe size below that which is provided on the pump.**
4. Install the remaining discharge line.
5. Install a union to facilitate pump removal when necessary.
6. Install a check valve after the union to prevent the backflow of liquid after each pumping cycle.
7. Install a gate valve after the check valve to allow periodic cleaning of the check valve or removal of the pump.
8. Install the remainder of the discharge line as short as possible with a minimum number of turns to minimize friction head loss. Larger pipe sizes may be required to eliminate friction head loss over long runs. Contact Liberty Pumps or other qualified person if there are questions regarding proper pipe size and flow rates.
9. Mount and properly seal the basin cover.
10. Vent basin in accordance with applicable plumbing codes.

Duplex (Two Pump) Systems

NOTICE

- Effluent pumps need to be totally submerged below the water line to prevent pump corrosion.

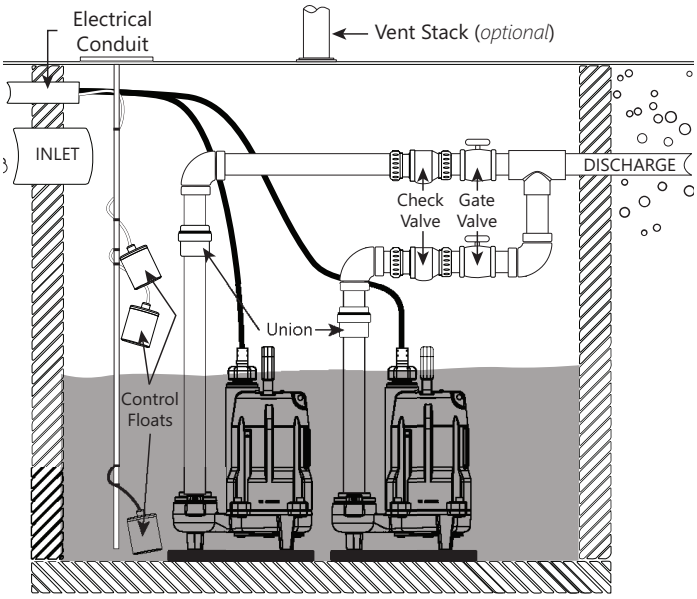

Figure 5. Typical Duplex System Installation (variations may apply)

1. Place both pumps in basin, making certain the mounting interface (i.e., guide rail, torque stop) is engaged correctly.

   The duplex control used will include 3 or 4 floats that will either be tethered to one of the discharge pipes or to an independent rod or bracket. Follow the duplex control manufacturer's instructions provided with the device. Each float switch must have adequate clearance to side wall of basin and free, unobstructed movement throughout its complete travel and must not contact the pump, piping, or other objects. Minimum pump turn OFF level must not be set below Table 1 values.
2. Connect an individual discharge pipe to each pump. **Do not reduce the discharge pipe size below that which is provided on the pump.** Larger pipe sizes may be required in some applications to reduce friction head loss over long runs. Contact Liberty Pumps or other qualified person if there are questions regarding proper pipe size and flow rates.
3. Install unions or flexible connectors to facilitate removal of the pump if necessary.
4. Install check valves on each discharge after the union and prior to the gate valve to prevent the back flow of liquid or gas. **A check valve on each discharge line, prior to tying into one common line, is necessary to prevent the recycling of fluid from one pump to the other.** A gate valve is recommended after the check valve to allow for periodic cleaning of the check valve or removal of the pump.

   Depending on the height of the basin, the check valves may either be installed inside the basin or outside the basin.
5. Install the remainder of the discharge line as short as possible with a minimum number of turns to minimize friction head loss. Larger pipe sizes may be required to eliminate friction head loss over long runs. Contact Liberty Pumps or other qualified person if there are questions regarding proper pipe size and flow rates.
6. Mount and properly seal the basin cover.
7. Vent basin in accordance with applicable plumbing codes.

Operation

Starting System

1. Verify all plumbing components are installed correctly and functional. Verify all valves are open and ready for pump use.
2. Double check all wire connections. Re-tighten all factory and field connections.
3. Ensure pump has no obstructions.
4. With all electrical and mechanical connections complete and secure, turn on power to pump and control panel, if applicable.
5. Verify operation of the pump, floats, and alarm circuits.
6. Run several cycles of water through the system to verify correct control operation for the installation.

Be certain to complete adequate testing, especially on systems with multiple pumps or custom control configurations.

Copyright © Liberty Pumps, Inc. 2019 All rights reserved.

Maintenance and Troubleshooting

WARNING **RISK OF ELECTRIC SHOCK**

- Accidental contact with electrically live parts, items, fluid, or water can cause serious injury or death.
- Always disconnect pump(s) from power source(s) before handling or making any adjustments to either the pump(s), the pump system, or the control panel.

WARNING **RISK OF SERIOUS INJURY OR DEATH**

- Wear adequate Personal Protective Equipment when working on pumps or piping that have been exposed to wastewater. Sump and sewage pumps often handle materials that can transmit illness or disease upon contact with skin and other tissues.
- Do not enter a pump basin after it has been used. Sewage and effluent can emit several gases that are poisonous.

NOTICE

- Verify correct 3-phase pump rotation before retuning to service.

Maintenance

Check pump frequently for debris and/or build up that may interfere with pump or float switch operation. As the motor is oil-filled, no lubrication or other maintenance is required.

In the event the pump becomes clogged, the inlet screen can be removed to gain access to the pump impeller. Once the obstruction is removed, the anti-airlock hole should be cleaned.

Troubleshooting

No repair work shall be carried out during the warranty period without prior factory approval. To do so may void the warranty.

Liberty Pumps, Inc. assumes no responsibility for damage or injury due to disassembly in the field. Disassembly, other than an authorized repair facility approved by Liberty Pumps or its authorized service centers, automatically voids warranty.

Table 2. Troubleshooting Matrix

Problem	Possible Cause	Corrective Action
Pump does not start.	Damaged power or control cord.	Replace as needed.
	Control panel selector switch in OFF position.	Set selector switch to Hand or Auto position.
	Blown control circuit transformer fuse.	Replace fuse.
	Tripped circuit breaker, tripped GFCI, blown fuse, or other interruption of power.	Reset tripped circuit breaker, reset GFCI, replace blown fuse with properly sized fuse, check that the unit is securely plugged in, investigate power interruption.
	Improper voltage.	Have an electrician check all wiring for proper connections and adequate voltage and capacity.
	Float switch unable to move to PUMP ON position due to interference in basin or other obstruction.	Position pump or float switch so that it has adequate clearance for free movement.
	Insufficient liquid level.	Verify liquid level is allowed to rise enough to activate float switch.
	Defective float switch.	Replace float switch.
	Obstructed impeller or volute.	Remove obstruction.
	Loose wiring connections.	Check and tighten all connections.
Pump runs, but does not turn off.	Pump is airlocked.	Turn pump off and let set for several minutes, then restart.
	Control panel selector switch in Hand position.	Set selector switch to Auto position.
	Float switch unable to move to PUMP OFF position due to interference with the side of basin or other obstruction.	Position pump or float switch so that it has adequate clearance for free movement.
	Control panel failure.	Check control panel.
	Defective float switch.	Replace float switch.

Copyright © Liberty Pumps, Inc. 2019 All rights reserved.

Table 2. Troubleshooting Matrix (continued)

Problem	Possible Cause	Corrective Action
Pump runs or hums, but does not pump.	Discharge line blocked or restricted.	Check discharge line for foreign material, including ice if discharge line passes through or into cold areas.
	Check valve is stuck closed or installed backward.	Remove check valve(s) and examine for freedom of operation and proper installation.
	Gate or ball valve is closed.	Open gate or ball valve.
	Total head (lift height) is beyond pump's capability.	Route piping to a lower level. If not possible, a larger pump may be required. Consult Liberty Pumps.
	Obstructed impeller or volute.	Remove obstruction.
	Pump is airlocked.	Turn pump off and let set for several minutes, then restart.
		Add baffle to reduce trapped air bubbles.
Pump cycles too frequently.	Improper float switch setting.	Adjust float switch setting.
	Check valve not installed, stuck open, or leaking.	Install check valve(s); remove check valve and examine for freedom of operation and proper installation.
Pump runs periodically when fixtures are not in use.	Check valve not installed, stuck open, or leaking.	Install check valve(s); remove check valve and examine for freedom of operation and proper installation.
	Fixtures are leaking.	Repair fixtures as required to eliminate leakage.
Pump does not deliver proper capacity.	Discharge valve(s) partially closed or clogged.	Check the discharge line for foreign material, including ice if the discharge line passes through or into cold areas.
	Check valve partially clogged.	Raise liquid level up and down to clear; remove check valve to remove obstruction.
	Incorrect 3-phase motor rotation.	Correct 3-phase pump rotation direction.
	Total head (lift height) is beyond pump's capability.	Route discharge piping to a lower level. If not possible, a larger pump may be required. Consult Liberty Pumps.
	Low liquid level.	Check liquid level.
	Obstruction in pump or piping.	Remove obstruction.
Pump operates noisily.	Piping attachments to building are too rigid.	Replace a portion of the discharge line with rubber hose or connector.
	Incorrect 3-phase motor rotation.	Correct 3-phase pump rotation direction.
	Foreign objects in the impeller cavity.	Clean the impeller cavity.
	Broken impeller.	Consult Liberty Pumps for information regarding impeller replacement.
Repeated tripping.	Circuit protection underrated.	Check rating and replace with proper size.
	Other appliance on same circuit.	Pump requires separate circuit.
	Pump is connected to an extension cord or wiring is inadequate or compromised.	Have an electrician check for proper wiring.
	Improper voltage.	Have an electrician check all wiring for proper connections and adequate voltage and capacity.
	Obstruction in pump.	Remove obstruction.
	Incorrect 3-phase motor rotation.	Correct 3-phase pump rotation direction.
	Foreign matter buildup.	Clean motor housing.

Copyright © Liberty Pumps, Inc. 2019 All rights reserved.

Liberty Pumps Wholesale Products Limited Warranty

Liberty Pumps, Inc. warrants that Liberty Pumps wholesale products are free from all factory defects in material and workmanship for a period of three (3) years from the date of purchase (excluding batteries). The date of purchase shall be determined by a dated sales receipt noting the model and serial number of the pump. The dated sales receipt must accompany the returned pump if the date of return is more than three years from the date of manufacture noted on the pump nameplate.

The manufacturer's sole obligation under this Warranty shall be limited to the repair or replacement of any parts found by the manufacturer to be defective, provided the part or assembly is returned freight prepaid to the manufacturer or its authorized service center, and provided that none of the following warranty-voiding characteristics are evident:

The manufacturer shall not be liable under this Warranty if the product has not been properly installed, operated, or maintained per manufacturer instructions; if it has been disassembled, modified, abused, or tampered with; if the electrical cord has been cut, damaged, or spliced; if the pump discharge has been reduced in size; if the pump has been used in water temperatures above the advertised rating; if the pump has been used in water containing sand, lime, cement, gravel, or other abrasives; if the product has been used to pump chemicals, grease, or hydrocarbons; if a non-submersible motor has been subjected to moisture; or if the label bearing the model and serial number has been removed.

Liberty Pumps, Inc. shall not be liable for any loss, damage, or expenses resulting from installation or use of its products, or for indirect, incidental, and consequential damages, including costs of removal, reinstallation or transportation.

There is no other express warranty. All implied warranties, including those of merchantability and fitness for a particular purpose, are limited to three years from the date of purchase. This Warranty contains the exclusive remedy of the purchaser, and, where permitted, liability for consequential or incidental damages under any and all warranties are excluded.

Liberty Pumps®

7000 Apple Tree Avenue
Bergen, NY 14416
ph: 800-543-2550
fax: 585-494-1839
www.LibertyPumps.com

Copyright © Liberty Pumps, Inc. 2019 All rights reserved.

KPSI 720

- Submersible level transducer
- ±0.25% FSO static accuracy
- Custom built in two days
- Two year warranty

The KPSI 720 is a submersible hydrostatic level transducer specifically designed to meet the rigorous environments encountered in liquid level measurement and control. It can be configured to perform to specifications under most adverse, reactive conditions.

Every KPSI Transducer utilizes a highly accurate pressure sensor assembly specifically designed for hostile fluids and gases. The assembly is integrated with supporting electronics in a durable waterproof housing constructed of 316 stainless steel or titanium. The attached electrical cable is custom manufactured and includes para-aramid synthetic fiber members to prevent errors due to cable elongation, and a unique water block feature that self-seals in the event of accidental cuts to the cable. Each vented reference transducer is shipped with a SuperDry Vent Filter that prevents moisture from entering the vent tube for one year without maintenance, even in the most humid environments.

Features

- Custom polyurethane or ETFE cable lengths
- Welded 316SS or titanium body
- Custom level ranges up to 700 ft. (210 m) H_2O
- Multiple analog outputs
- Multiple nose piece styles
- Optional lifetime lightning protection
- Long life vent filter or aneroid bellows
- Available molded cable seal

Applications

- Lift stations
- Pump control
- Level control
- Surface water monitoring
- Landfill leachate
- Well monitoring
- Groundwater monitoring

Specifications

PARAMETER		COMMENT
LEVEL RANGES		
Full Scale Level Ranges (Intermediate level ranges are available)	2.3 thru 700 ft. H_2O (0.70 thru 210 m H_2O)	Vented Gage Reference
	10 thru 700 ft. H_2O (3 thru 210 m H_2O)	Sealed Gage Reference
	35 thru 700 ft. H_2O (10 thru 210 m H_2O)	Absolute Gage Reference
Proof Pressure	1.5 x FS	
Burst Pressure	2.0 x FS	
STATIC PERFORMANCE		
Static Accuracy (combined effects of non-linearity, hysteresis and repeatability, best fit straight line method)	±0.25% FSO	BFSL method
Resolution	+0.0001% FS	

ENVIRONMENTAL		
Wetted Materials	316 SS or Titanium; POM; FKM; Polyurethane or ETFE	
Compensated Temp Range	0 to 50ºC	
Thermal Error (maximum allowable deviation from the Best Fit Straight Line due to a change in temperature)	±0.05% FSO/ºC ±0.1% FSO/ºC	Worse case over compensated temperature range for ranges < 12 ft. (4 m) H_2O
Operating Temp Range	-20 to 60 ºC	When attached to polyurethane cable
Protection Rating	IP 68, NEMA 6P	
ELECTRICAL		
Excitation	9-28 V – VDC output 9-28 V – mA output 15-28 V – VDC output 10-28 V – VDC output	0-5 V, 0-2.5 V, 0-4 V 4-20 0-10 V 1.5-7.5 V
Input Current	20 mA max. 3.5 mA max.	For mA output For VDC output
Output	4-20 mA, 0-5 VDC, 0-2.5 VDC, 0-4 VDC, 0-10 VDC, 1.5-7.5 VDC	For ranges < 5 ft. (1.5m) H_2O, only 4-20mA output is available
Zero Offset	±0.25 mA for mA output < 0.25 VDC for VDC output	
Output Impedance	See loop diagram for mA output 20 ohm for VDC output	
Insulation Resistance	100 mega ohm at 50 VDC	
Circuit Protection	Polarity, surge/shorted output	
CERTIFICATIONS		
	CE compliant	EN 61326-1:2013 and 61326-2-3:2013
	UL, CUL and FM	Class I, II, III, Div. 1, Groups A,B,C,D,E,F&G
	WEEE/RoHS	Waste from Electrical and Electronic Equipment (WEEE) and Restrictions on the use of Hazardous Substances (RoHS)
PHYSICAL		
Approximate Weight	0.44 lbs. (198 g) transducer 0.05 lbs./ft. (79 g/m) cable	
Cable Jacket Material	Polyurethane (Standard) ETFE (Optional)	
Cable Pull Strength	200 lbs. (90 kg)	Polyurethane
Cable Number of Conductors	4 max.	
Cable Conductor Size	22 AWG	
Cable Seal	Molded Polyurethane FKM Gland	For polyurethane cable For ETFE cable
TEMPERATURE OUTPUT OPTION (Not intrinsically safety approved)		
Temperature Range	-20 to 60ºC	Available for 4-20mA output versions only
Output Signal	4-20 mA	
Temperature Measurement Accuracy	±4ºC	±1ºC with single point calibration
LIGHTNING PROTECTION (Power supply needs to be limited to 150mA to avoid lock up of the gas tube after a suppression event)		
Life Expectancy	>1,000 Operations	
Peak Clamping Voltage	36 Volts	
Response Time	<10 nsecs	
Shunts	20,000 Amperes	

Dimensions

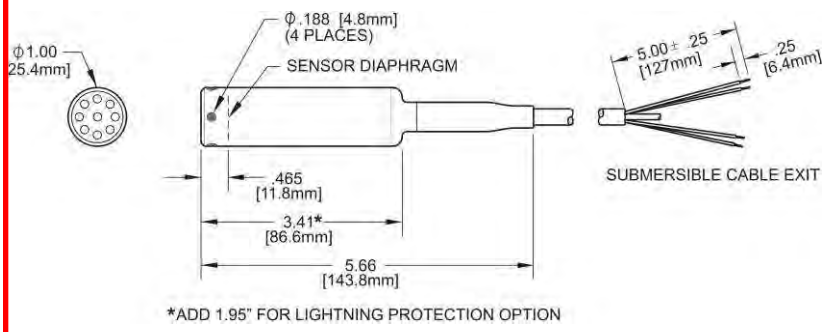

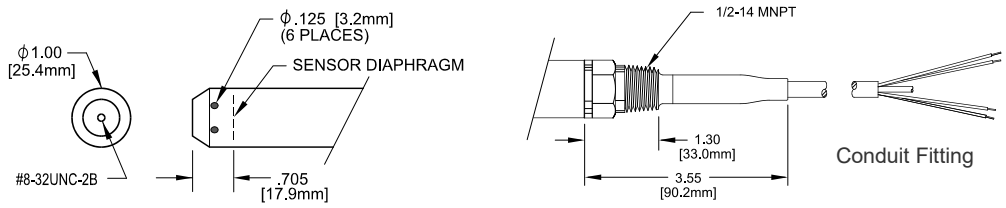

Molded Cable Seal Configuration for Polyurethane Cable

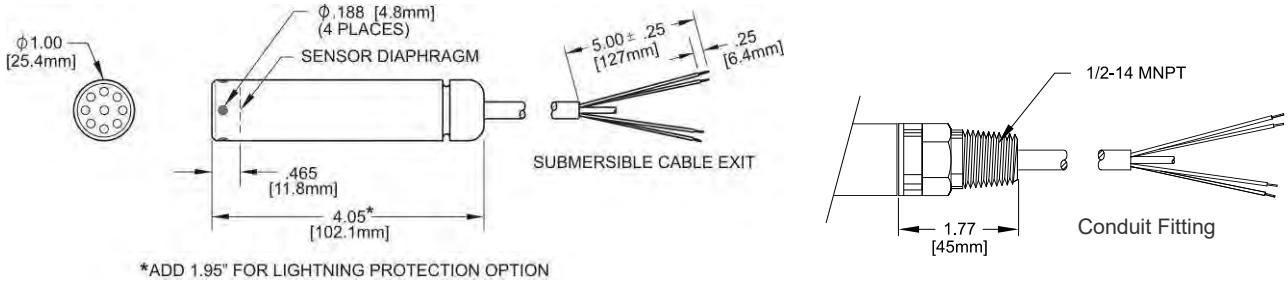

Gland Cable Seal Configuration for ETFE Cable

Electrical Termination / Loop Resistance

ELECTRICAL TERMINATION		
22AWG CONDUCTORS IN A SHIELDED CABLE WITH VENT TUBE		
4-20 mA	RED BLACK	+ EXCITATION - EXCITATION
0-5 VDC	RED BLACK WHITE	+ EXCITATION - EXCITATION + SIGNAL
ALL	DRAIN WIRE	SHIELD

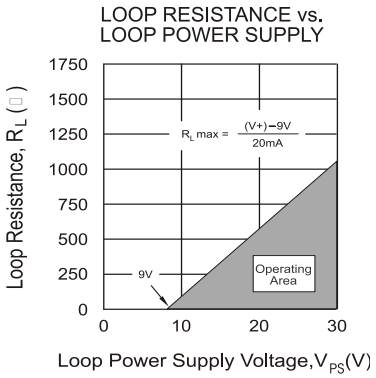

Ordering Information

MODEL — **SUBMERSIBLE LEVEL TRANSDUCER**

7 2 0 — ±0.25% FSO Static Accuracy

MATERIAL
- S Stainless Steel
- T Titanium

REFERENCE FORMAT
- 1 Vented gage
- 3 Sealed gage
- 4 Absolute

OUTPUT
- 3 0-5 VDC
- F 0-2.5 V
- G 0-4 V
- H 0-10 V
- J 1.5-7.5V
- 4 4-20mA
- 6 4-20mA temperature measurement option

PRESSURE CONNECTION
- A Open-face nose cap
- B Ported nose cap
- E Piezometer nose cap
- 2 1/4" - 18 NPT male fitting
- 7 1/2" - 14 NPT male fitting

ELECTRICAL CONNECTION
- 0 Molded cable seal
- 4 1/2" - 14 NPT male conduit fitting with molded cable seal
- A Gland cable seal
- B 1/2" - 14 NPT male conduit fitting with gland cable seal

LIGHTNING PROTECTION
- A None
- B Full Lightning Protection

LEVEL RANGE (at MAX output)[1]
. # #
013.000

LEVEL RANGE (at MIN output)[1]
. # #
000.000

MOISTURE PROTECTION
- A None (sealed/absolute only)
- B Vent Filter
- C Aneroid Bellows
- D Stainless Steel Vent Filter

CABLE TYPE
- 1 Polyurethane
- 2 ETFE (Electrical Connection "A" or "B" Only)

CABLE LENGTH
(in feet)
0050

LABEL[2]
- A psi
- B ft H_2O
- C m H_2O

7 2 0

Notes:

1. The part number requires two level range limits, corresponding to the maximum and minimum analog outputs of the transducer, to be specified in **pounds per square inch (psi)** to three decimal places. The lower level range is typically 000.000 unless otherwise required. For reverse output requirements, enter the lower level range for the maximum output signal and the upper range for the minimum output. Use the following conversion factors: **Ft. H_2O / 2.3073 = psi // m H_2O / 0.703265 = psi**
   Examples: 10 ft. H_2O / 2.3073 = 4.334 psi (Enter 004.334 in the part number), 10 m H_2O / 0.703265 = 14.219 psi (Enter 014.219 in the part number)
   For sealed gage reference add local atmosphere when converting to psi. Contact PSI for assistance.
   Example: 10 ft. H_2O / 2.3073 +14.7 = 19.034 psi (Enter 019.034 in the part number)
2. Units of measure on standard MEAS label. Contact Measurement Specialties if private labeling is required.

NORTH AMERICA
Measurement Specialties, Inc.,
a TE Connectivity company
Tel : 1-800-522-6752
Email: customercare.hmpt@te.com

EUROPE
Measurement Specialties (Europe), Ltd.,
a TE Connectivity company
Tel : +33 (0) 800-440-5100
Email: customercare.dtmd@te.com

ASIA
Measurement Specialties (China), Ltd.,
a TE Connectivity company
Tel : +86 755 3330 5088
Email: customercare.shzn@te.com

te.com/sensorsolutions

Measurement Specialties Inc., a TE Connectivity company.

Measurement Specialties (MEAS), American Sensor Technologies (AST), TE Connectivity, TE Connectivity (logo) and EVERY CONNECTION COUNTS are trademarks. All other logos, products and/or company names referred to herein might be trademarks of their respective owners.

The information given herein, including drawings, illustrations and schematics which are intended for illustration purposes only, is believed to be reliable. However, TE Connectivity makes no warranties as to its accuracy or completeness and disclaims any liability in connection with its use. TE Connectivity's obligations shall only be as set forth in TE Connectivity's Standard Terms and Conditions of Sale for this product and in no case will TE Connectivity be liable for any incidental, indirect or consequential damages arising out of the sale, resale, use or misuse of the product. Users of TE Connectivity products should make their own evaluation to determine the suitability of each such product for the specific application.

© 2016 TE Connectivity Ltd. family of companies All Rights Reserved.

KPSI TRANSDUCERS

Accessories and Options

TE Connectivity offers an extensive line of accessories and options to augment the functionality of our KPSI Level and Pressure Transducers. These enhancements can be specified with the instrument's order or, in many cases, can be retrofitted in the field. Our Accessories and Options include an expedited shipping service, lifetime lightning protection, and a variety of pressure connections to suit almost any installation. Industry-leading performance and reliability, combined with short lead times, responsive, knowledgeable Customer Service personnel, and our ability to customize KPSI transducers to meet virtually any requirement give us our competitive advantage. For trouble-free, cost-effective level and pressure monitoring instrumentation, contact our Sales or Customer Service Team today.

TABLE OF CONTENTS

Installation Hardware	
Anti-Snag Cone	3
Cable Hanger	3
Mounting Clamp	4
Well Caps	4
Identification Tags	5
Cable Splice Kit	5
Lightning Surge Line Protector	5
Junction Box	6
Replaceable and Interchangeable Nose Caps	
Open-face Nose Cap	7
Ported Nose Cap	7
Stainless Steel Ported Nose Cap	7
Piezometer Nose Cap	8
Male NPT Nose Cap	8
¾” Removable Ported Nose Cap	8
Corrosion Protection	
Body Clamp Anode	9
Nose Extension Anode	9
Moisture Protection	
Vent Filters	10
Aneroid Bellows	10
Additional Accessories	
Removable Cable Plug	11
Backshell for Removable Cable Option	11
Nose Weight	11
859 Removable Cable	12
Digital Installation Hardware	13
Digital Displays	13

INSTALLATION HARDWARE

TE Connectivity offers an extensive array of hardware to facilitate the installation of KPSI Transducers into almost any application. Contact our Technical Support staff for assistance in selecting the hardware that may best suit your application or if you have unique requirements that may require a custom solution.

ANTI-SNAG CONE

Anti-Snag Cones are designed to fit over the cable end of either 1.0" or 0.75" diameter transducers to prevent the transducers from getting hung on obstacles when pulling the cable. The cones are constructed of PVC and come in separate sizes for the two diameters.

*PN: **42-01-66181** Anti-Snag Cone for 1.0" diameter for use with molded cable seal.*

*PN: **42-01-64134** Anti-Snag Cone for 1.0" diameter for use with gland cable seal*

*PN: **42-01-64136** Anti-Snag Cone for 0.75" diameter for use with gland cable seal*

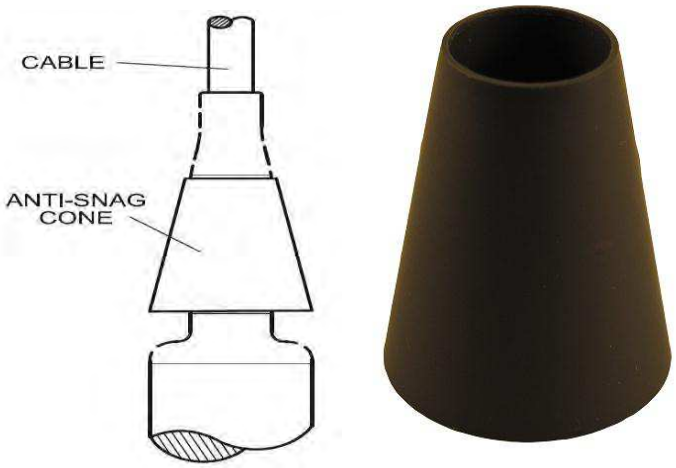

CABLE HANGER

The Cable Hanger is used to suspend the transducers in the liquid media. The hanger slides onto the cable from the unterminated end and is easily positioned while pushing the ends of the hanger together. As the hanger expands from the weight of the transducer, it grips the cable by the sheath. The cable hanger is 6.0 in (15.3 cm) long and is constructed of 304 stainless steel. ***The cable hanger is not recommended for cable lengths in excess of 500 ft. (150 m) as it does not take advantage of the Kevlar strength members in the cable.***

*PN: **12-90-0931+***

MOUNTING CLAMP

The Mounting Clamp is used to secure 1.0" diameter transducers to a bulkhead. The clamp is consists of a 304 stainless steel bracket with a thermoplastic insert that holds the transducer housing.

PN: ***49-06-00PC***

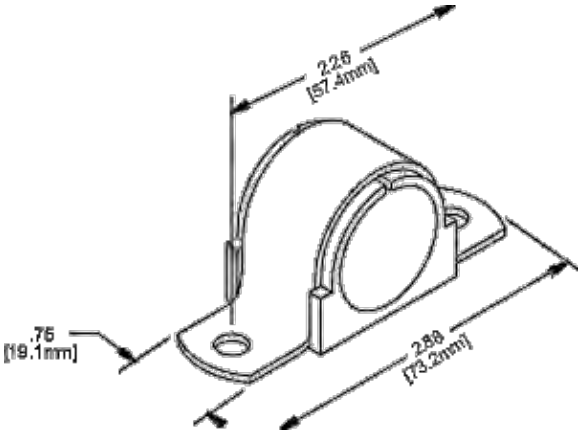

WELL CAPS

Locking Well Caps enable transducers to be suspended within the well while providing security. The vented orange PVC caps are 2" or 4" ID and come with a 304 stainless steel dock (ring and threaded quick-link) to support a cable hanger. The dual-hinge locking lid uses a Buna-N/Nitril O-ring for a watertight seal. The black triangle warning label on the lid can be marked for well identification.

PN: ***861-2A*** *2" vented locking well cap w/dock*

PN: ***861-2B*** *2" vented locking well cap*

PN: ***861-2C*** *2" well dock*

PN: ***861-4A*** *4" vented locking well cap w/dock*

PN: ***861-4B*** *4" vented locking well cap*

PN: ***861-4C*** *4" well dock*

STAINLESS STEEL IDENTIFICATION TAGS

Identification Tags are available to attach to the transducer cable to provide easy identification in the field. User-specified information is laser engraved onto the 1.0" square tag, which is constructed of 304 stainless steel.

PN: ***36-05-1540T79***

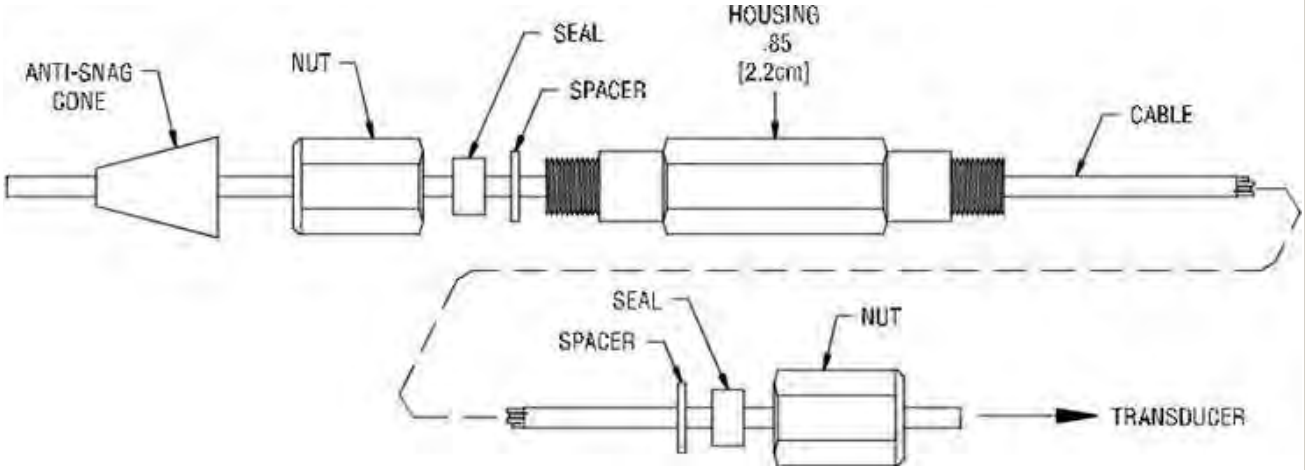

CABLE SPLICE KIT

The Cable Splice Kit provides a waterproof connection to extend or repair KPSI transducer submersible cables. In many cases, the cable splice kit is a more economical alternative for repairing damaged cable. The kit includes all necessary items to electrically connect and insulate the conductors, couple the vent tubes, and seal the 316 stainless steel housing to either polyurethane or ETFE cable. Assembly instructions are also included.

PN: ***830***

Lightning Protection – Line Protector

The line protector contains a gas discharge tube which crowbars up to 20,000 ampere currents to the ground. The tube remains in the crowbar state until the surge has passed, then automatically resets the line to normal operation without the need to reset a circuit breaker.

PN: ***50-02-2790*** *mA or VDC Output (2 protectors required for VDC outputs)*

JUNCTION BOX

The Junction Box provides a water-resistant enclosure for electrically connecting the transducer cable to the users system via a terminal strip. The enclosure also provides convenient location for terminating the vent tube on vented gage transducers. The enclosure can be ordered with either a vent filter or an aneroid bellows. The enclosure is constructed of polycarbonate with a clear top incorporating a neoprene seal. The junction box is rated IP66 and measures 9.45" L x 6.30" W x 4.72" H. Mounting screws are provided.

PN: **840** Junction Box with Vent Filter

PN: **845** Junction Box with Aneroid Bellows

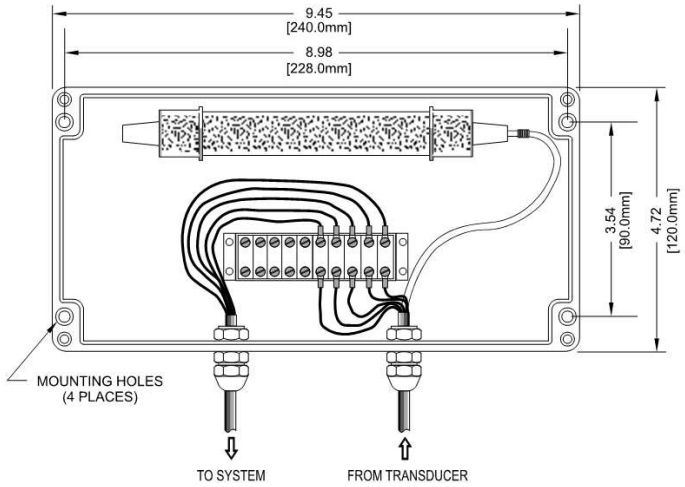

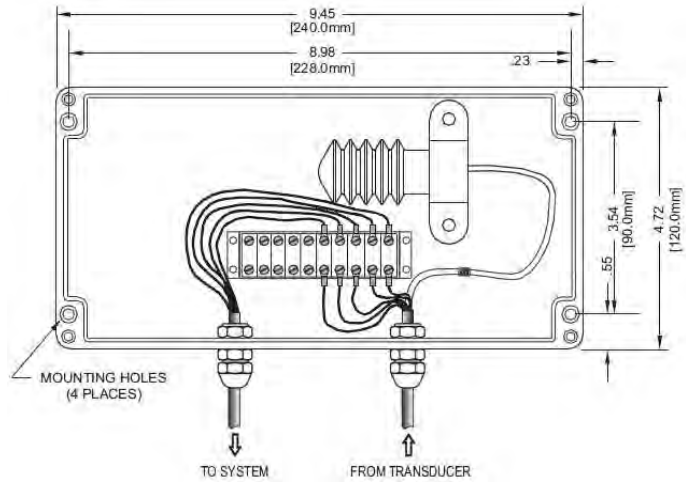

REPLACEABLE & INTERCHANGEABLE NOSE CAPS – 1” DIAMETER

Transducers having 1.0" diameter housings are shipped with replaceable nose caps of the requested variety at no additional cost when ordered. The nose caps screw on to the front of the transducer housing via a 7/8"-20 UNEF thread with an O-ring seal. Spare or alternative nose caps may be ordered separately.

OPEN-FACE NOSE CAP

The *Open-face Nose Cap* offers the best resistance to clogging. This single-piece nose cap provides maximum exposure of the sensing diaphragm to the liquid media through a protective perforated screen on the front. The open-face nose cap is constructed from molded Delrin¨

PN: **42-30-6659**

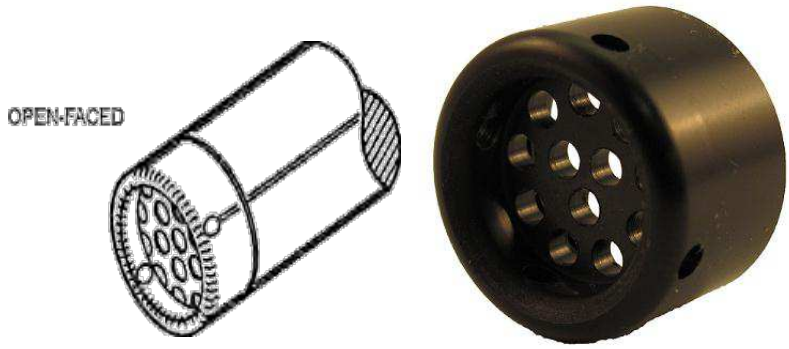

PORTED NOSE CAP

The *Ported Nose Cap* offers the best protection against damage to the sensing diaphragm. This single-piece nose cap allows the liquid media to enter through 6ea 1/8" holes around the outside and includes a #8-32 UNC-2B threaded hole on the front. The closed-face nose cap is constructed of molded Delrin¨.

PN: **42-01-1314A**

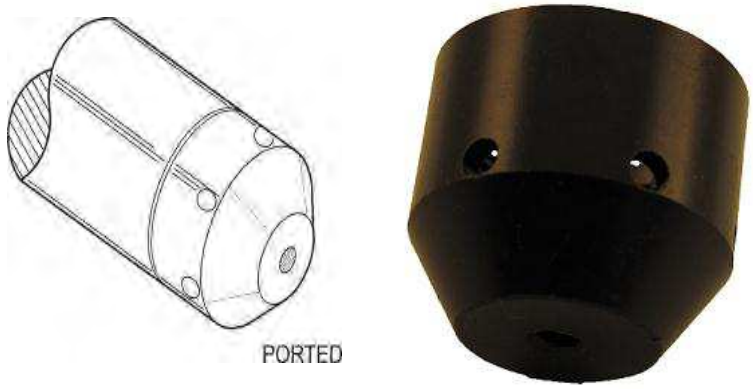

STAINLESS STEEL PORTED NOSE CAP

The Stainless Steel *Ported Nose Cap* offers the best protection against damage to the sensing diaphragm. This single-piece nose cap allows the liquid media to enter through 6ea 1/8" holes around the outside and includes a #8-32 UNC-2B threaded hole on the front. The closed-face nose cap is constructed of 316 Stainless Steel

PN: **42-01-64140**

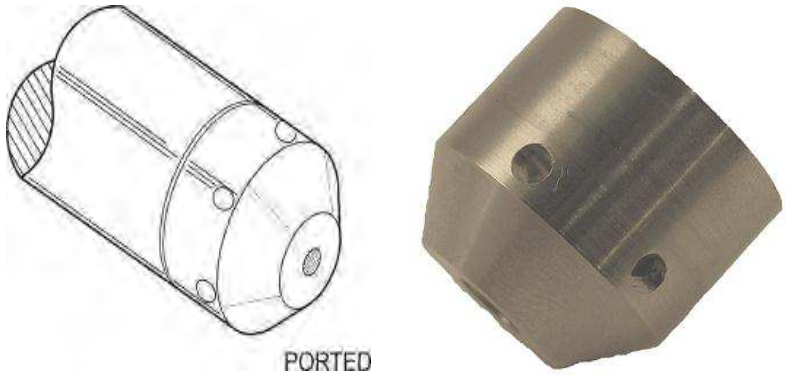

PIEZOMETER NOSE CAP

The *Piezometer Nose Cap* offers the best alternative for burying the transducer in the ground without risk to the sensing diaphragm. This two-piece nose cap allows the liquid media to enter through a permeable 40 micron centered stainless steel mesh filter at the front of the cap. The piezometer nose cap is constructed of Delrin¨.

PN: **42-30-6676S**

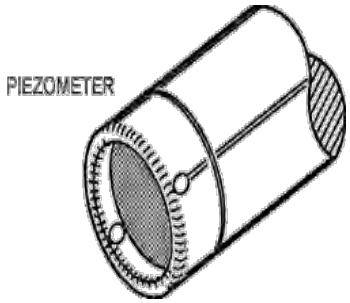

MALE NPT PRESSURE NOSE CAP

The *Male NPT Pressure Nose Cap* offers the best alternative for installing the transducer on a pipe. This single-piece nose cap incorporates a 1/4"-18 or a 1/2"-14 MNPT fitting on the front for connection. The male NPT nose cap is constructed of stainless steel or titanium, as required.

PN: **42-01-64154** Stainless Steel 1/4"-18 MNPT Nose Cap
PN: **42-01-64154T** Titanium 1/4"-18 MNPT Nose Cap
PN: **42-02-64180** Stainless Steel 1/2"- 14 MNPT Nose Cap
PN: **42-02-64180T** Titanium 1/2"-14 Male NPT Nose Cap

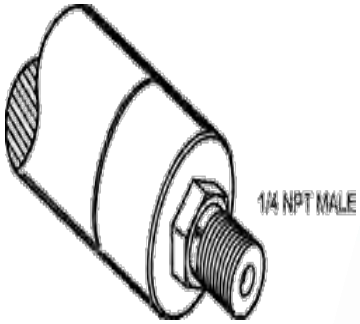

REPLACEABLE & INTERCHANGEABLE NOSE CAPS – ¾” DIAMETER

Transducers having 0.75" diameter housings can be ordered with replaceable nose cap. Spare or alternative nose caps may be ordered separately

Removable Ported Nose Cap (Delrin)

The *Removable Ported Nose Cap* offers the best protection against damage to the sensing diaphragm. The closed-face nose cap is constructed of molded Delrin.

PN: **42-01-66350**

CORROSION PROTECTION

KPSI Transducers are available with optional wetted materials to maintain compatibility with a variety of caustic liquid media. Stainless steel or titanium construction, FKM seals, and polyurethane or PTFE cable permit the transducers to operate in most liquid environments. In the event galvanic corrosion is anticipated, we offer two self-sloughing sacrificial anodes that attach to 1.0" diameter transducers.

BODY CLAMP ANODE

The *Body Clamp Anode* is a 2.2 in (5.6 cm) diameter zinc sphere of which the two halves bolt on to the transducer housing. The anode weighs approximately 13 oz. (370 g).

PN: **820**

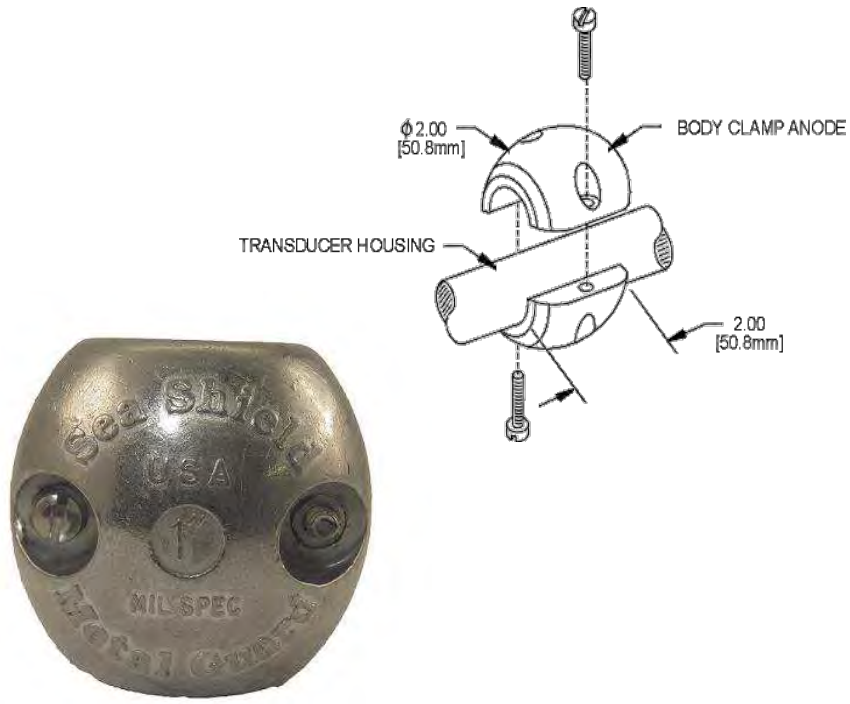

NOSE EXTENSION ANODE

The *Nose Extension Anode* is a zinc cylinder that attaches to a closed-face nose cap via an 8-32 threaded hole in the front of the nose cap. The anode is shipped with a stainless steel closed-face nose cap.

PN: **825** 1" dia. for 700 Series

PN: **826** ¾" dia. for KPSI 300DS only

PN: **42-00-66312** Replacement anode for PN 826

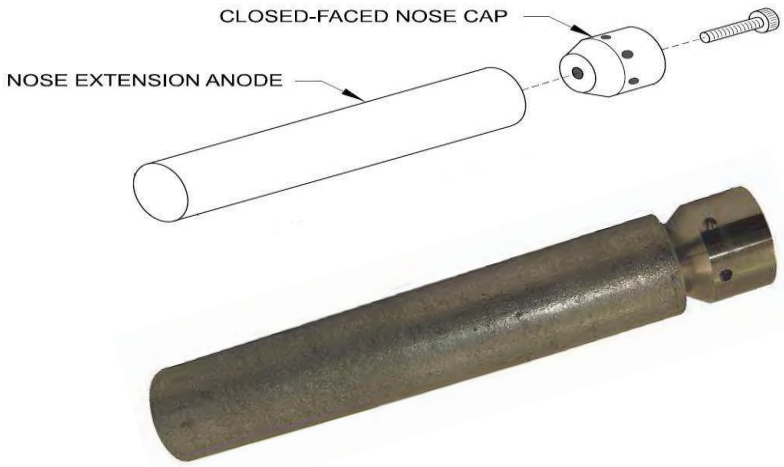

MOISTURE PROTECTION

Two solutions are offered to provide protection against moisture incursion on transducers with vented gage reference pressure format. The choice of which solution to utilize depends on the ability to provide periodic maintenance and the accuracy required for level measurement.

VENT FILTER

Vent Filters provide the highest accuracy capability and utilize indicating desiccant to prevent moisture from entering the vent tube and damaging transducers with vented gage reference pressure format. The desiccant will turn from blue to pink when exposed to moisture indicating the need for maintenance. All KPSI vented gage transducers are shipped with our SuperDry Vent Filter. This vent filter design prevents moisture from entering the vent tube for at least one year without maintenance, at no additional cost. The vent filters are 6.0 in (15.3 cm) long with a 0.75" diameter.

The KPSI 811 Stainless Steel Vent Filter is housed in a 316 stainless steel body containing desiccant to provide vent tube moisture protection for a minimum of five years without maintenance. A Gore-Tex filter plug provides the vent filter with atmospheric pressure reference. These vent filters are 2.75 inches (7.0 cm) long with a 0.75 inch (1.9 cm) diameter.

Model 811

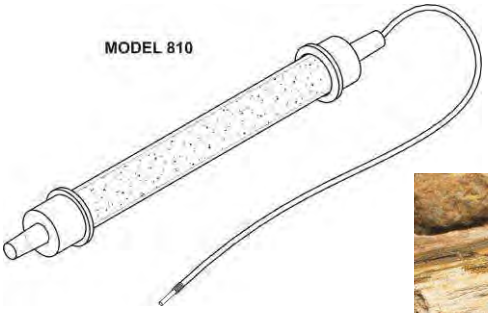

MODEL 810

ANEROID BELLOWS

The Aneroid Bellows is a maintenance-free alternative to desiccant filters for moisture protection on vented gage transducers. Made of flexible neoprene material attached to a polycarbonate mounting bracket, the bellows fluctuates with changes in atmospheric pressure maintaining a constant barometric reference. Note that the use of the bellows results in a closed reference pressure system subject to zero shift errors induced by changing temperatures of up to 0.003 psi/ºC. The bellows is not recommended for use with accuracy requirements of ±0.25% FS or better, nor for ranges < 2 psi.

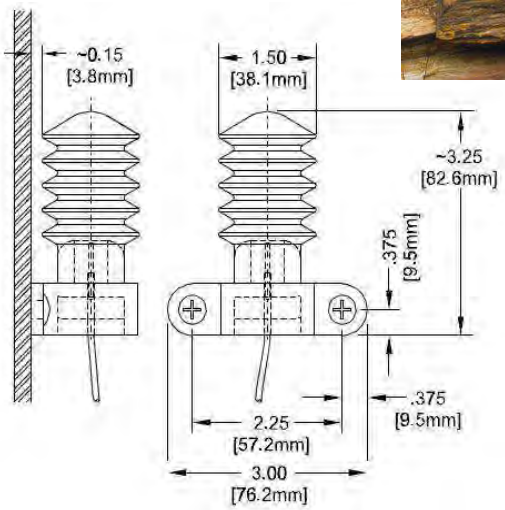

Model 815

PN: **810** SuperDry Vent Filter

PN: **811** Stainless Steel Vent Filter

PN: **815** Aneroid Bellows

ADDITIONAL ACCESSORIES

REMOVABLE CABLE PLUG While using our removable cable options it is possible to utilize one transducer at many sites while having cables permanently deployed at the locations. The removable cable plug provides watertight protection to the removable cable when the transducer is removed. PN: **850-00800** Stainless Steel PN: **850-00801** Titanium	
BACKSHELL FOR REMOVABLE CABLE OPTION While using our removable cable options it is possible to utilize one transducer at many sites while having cables permanently deployed at the locations. The removable cable plug provides watertight protection to the removable cable when the transducer is removed. PN: **852-00000** 316 Stainless Steel Backshell for Removable Cable Option PN: **852-01000** Titanium Backshell for Removable Cable Option	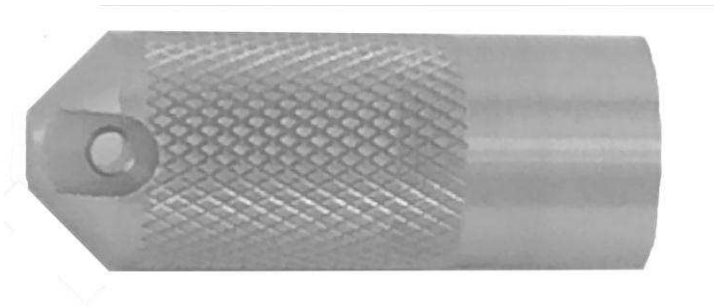
STAINLESS STEEL NOSE WEIGHT The KPSI Nose Weight provides an additional 16.5 ounces of weight to our transducers. Utilizing ¾" OD, 316 Stainless Steel, and a non-fixed connection the Nose weight maintains a minimal profile to accommodate most applications. PN: **827**	

859 REMOVABLE CABLE OPTION

859 REMOVABLE CABLE

The 859 Removable Cable is a deployable field cable that allows for one transducer to be used at many sites while having cables permanently deployed at the various locations.

PN: See Below Table

MODEL			REMOVABLE CABLE							
8	5	9								
↓	↓	↓	MATERIAL							
			S	Stainless Steel						
			T	Titanium						
			↓	OUTPUT						
				C	SDI-12					
				D	RS 485 w/SDI-12 protocol					
				↓	ELECTRICAL CONNECTION					
					0	Molded cable seal				
					A	Gland cable seal				
					↓	CABLE TYPE				
						1	Polyurethane			
						2	ETFE (**Connection A Only)**			
						4	Armored **(Connection O Only; 200 Feet Max)**			
						↓	CABLE LENGTH			
							#	#	#	**(in feet)**
8	5	9								

DIGITAL DISPLAYS

Precision Digital Trident Digital Displays	
Power: 85-265 VAC	
PD765-6R0-00	Basic digital panel meter; no options
PD765-6R0-10	24 VDC Supply
PD765-6R2-00	2 relays
PD765-6R2-10	2 relays and 24 VDC supply
PD765-6R3-00	4-20 mA output
PD765-6R3-20	4-20 mA out + dual 24 VDC Supplies
PD765-6R5-10	2 relays + 4-20 mA output + 24 VDC supply
Power: 12-36 VDC	
PD765-7R0-00	Basic digital panel meter; no options
PD765-7R2-00	2 relays
PD765-7R3-00	4-20 mA output
PD765-7R5-00	2 relays + 4-20 mA output
PDA2801	Enclosure

DIGITAL INSTALLATION HARDWARE

PN: **850-00855**	Technicians Communication Cable
PN: **860-00100**	RS-485 to SDI-12 Convertor
PN: **860-00300**	RS-485 to RS-232C Convertor

NORTH AMERICA
Measurement Specialties,
a TE Connectivity Company
1000 Lucas Way
Hampton, VA 23666
Tel: 1-800-745-8008
Fax: 1-510-498-1578
Sales: WL.Sales@te.com

EUROPE
Measurement Specialties (Europe), Ltd.,
a TE Connectivity Company
26 Rue des Dames
78340 Les Clayes-sous-Bois, France
Tel: +33 (0) 130 79 33 00
Fax: +33 (0) 134 81 03 59
Sales: customercare.lcsb@te.com

ASIA
Measurement Specialties (China), Ltd.,
a TE Connectivity Company
No. 26 Langshan Road
Shenzhen High-Tech Park (North)
Nanshan District, Shenzhen 518057
China
Tel: +86 755 3330 5088
Fax: +86 755 3330 5099
Sales: customercare.shzn@te.com

te.com/sensorsolutions

Measurement Specialties, Inc., a TE Connectivity company.

Measurement Specialties (MEAS), American Sensor Technologies (AST), TE Connectivity, TE Connectivity (logo) and EVERY CONNECTION COUNTS are trademarks. All other logos, products and/or company names referred to herein might be trademarks of their respective owners.

The information given herein, including drawings, illustrations and schematics which are intended for illustration purposes only, is believed to be reliable. However, TE Connectivity makes no warranties as to its accuracy or completeness and disclaims any liability in connection with its use. TE Connectivity's obligations shall only be as set forth in TE Connectivity's Standard Terms and Conditions of Sale for this product and in no case will TE Connectivity be liable for any incidental, indirect or consequential damages arising out of the sale, resale, use or misuse of the product. Users of TE Connectivity products should make their own evaluation to determine the suitability of each such product for the specific application.

© 2016 TE Connectivity Ltd. family of companies All Rights Reserved.

KPSI ANALOG MANUAL
23RD EDITION

TABLE OF CONTENTS

1.0 Product Description 3

General Characteristics 3

Care and Handling 3

Calibration 3

Approvals 3

2.0 Product Accessories and Options 4

Nose Caps 4

Moisture Protection 4

Sacrificial Anode 5

Absolute/Sealed Gage Transducer 5

Polyurethane & ETFE Jacketed Cable 5

Lightning Protection 6

½" Male NPT Conduit Fitting 7

Electrical Outputs 7

Reverse Signal Output 7

Temperature Output 7

Cable Hanger 8

Submersible Cable Splicing Kit 8

3.0 Installation & Maintenance Tips 9

General Installation Procedures 9

Transducer Anchors 9

Transducer Submersion 9

Vent Filters or Aneroid Bellows 9

Cable Protection 10

Bending of Cable 10

Cable Compression 10

4-20 mA Output Wiring 10

VDC Output Wiring 10

Models 745/750 10

Sealed-Gage Transducer above Sea Level 10

Transducer Position Sensitivity 10

General Maintenance Tips 11

Desiccant Maintenance 11

Clogged Nose Piece or Dirty Diaphragm 11

Cleaning Your Transducer 11

4.0 Warranty and Product Return Procedures 13

Restocking Policy 13

Appendix A Drawings and Diagrams 15

Appendix B Frequently Asked Questions 17

Appendix C Field Checkout & Troubleshooting Techniques 19

Appendix D Calibration Calculations 25

1.0 PRODUCT DESCRIPTION

GENERAL CHARACTERISTICS

KPSI Level and Pressure Transducers use isolated- diaphragm sensors that are specifically designed for use with hostile fluids and gases. These sensors utilize a silicon pressure cell that has been fitted into a stainless steel or titanium package with an integral, compliant stainless steel or titanium barrier diaphragm. This sensor assembly is housed in a rugged 316 stainless steel or titanium case which provides for a variety of level ranges from 2.3 ft. (0.75 m) H2O through 6921 ft. (2109 m) H2O and pressure inputs from 0-1 (7 kPa) through 0-15000 psi (103 mPa). Our devices feature internal signal conditioning. Standard analog outputs are 4-20 mA and VDC.

All units containing active electronic components have surge and reverse polarity protection. For ease of use in the field, our transducers are permanently laser engraved with our logo and name, wiring information, part number (P/N), serial number (S/N), date of manufacture (DOM), range, excitation and output. Transducers are offered in diameters of 1.0 (25 mm) and 0.75 inches (19 mm).

CARE AND HANDLING

Our transducers are designed for rugged use. However, they need protection from over pressure and sharp impact. When lowering them into a liquid, penetrate the surface slowly and only to the depth necessary. Avoid dropping the unit from above the surface. Clean all transducers by rinsing them in a mild detergent. Direct probing of the diaphragm or attempts to remove protective screens will damage the sensor, voiding the warranty

CALIBRATION

All transducers are shipped with calibration information unique to each transducer. Make sure you keep each calibration report. However, should you misplace your calibration sheet, contact the factory and request a duplicate. All KPSI Transducer calibrations are traceable to the National Institute of Standards and Technology (NIST).

APPROVALS

Most of our products have UL and FM certification for intrinsic safety. Their respective installation control drawings can be downloaded from our website. Several of our product lines also carry ABS approval. Most products are CE compliant to EN 61326-1:2006 and EN 61326-2-3:2006. CE compliant units are labeled accordingly.

These units are designed for installation in a Class I, Division 1, Groups A, B, C, and D, Class II, Division 1, Groups E, F and G, Class III, Division 1 hazardous location when connected to appropriate apparatus such as those manufactured by R. G. Stahl, Inc., and others.

MANUAL CONTENT DISCLAIMER

While this document is believed to be thoroughly reliable, TE Connectivity assumes no liability for inaccuracies. Addenda will be distributed as deemed necessary by TE Connectivity. All computer programs supplied with your products are written and tested on available systems at the factory. TE Connectivity assumes no liability for other computers, languages, or operating systems. TE Connectivity reserves the right to change the specifications without notice.

2.0 PRODUCT ACCESSORIES AND OPTIONS

WARNING: POTENTIAL ELECTROSTATIC CHARGING HAZARD

In hazardous locations:

- **Avoid building up static charge on case of data protector and plastic accessories.**
- **Use damp rag to wipe data protector and plastic accessories to avoid static build up.**

NOSE CAPS

There are several different user-installable nose caps for the KPSI 700, 710, 720, 730, 735 submersible level transducers:

The **PORTED NOSE CAP** (POM or 316 Stainless) with #8-32UNC-2B threaded hole is best used where weights are required and for those installations where users may encounter sharp, protruding objects.

The **OPEN-FACE NOSE CAP** which allows maximum contact with the liquid media is ideal for wastewater and "greasy" applications where clogging of the sensor is a concern.

The **PIEZOMETER NOSE CAP** allows the unit to be buried in saturated soil without damage to the sensor diaphragm.

The **1/4" MALE NPT** pressure nose cap is not only useful for calibration purposes but also allows the device to be used as a submersible or above ground pressure transducer

Warning: Caution must be exercised when inserting a screw into the nose cap as the maximum insertion length should not exceed 0.175”

Moisture Protection

All KPSI submersible transducers with vented gauge format are supplied with a protective barrier that guards against moisture buildup in the cable vent tube. The 810 SuperDry vent filter is installed free of charge and is guaranteed to operate maintenance free for one year.

The 811 Stainless Steel Vent Filter is housed in a 316 stainless steel body containing desiccant to provide vent tube moisture protection for a minimum of five years without maintenance.

We also offer the 815 Aneroid Bellows as a maintenance free option that can be used on submersibles with accuracies of: ±1%, ±0.5%, or ±0.25% FSO. These barriers ensure reliable operation and long life as they protect sensitive electronic components from mildew and prevent the formation of a liquid column in the vent tube. Any such liquid column directly affects calibration of the transducer.

SACRIFICIAL ANODES

Our sacrificial anodes are made from a special zinc alloy formulated to guarantee continued effectiveness over long periods. Because the anodes are 95% galvanic, they will not corrode unless there is an electrolytic demand. The anode maintains a high driving potential throughout its 12 month life, is self-sloughing and always exposes new zinc for the best possible protection. For those applications where cable buoyancy is a problem, the sacrificial anode can be substituted for hanging weights.

Sacrificial Anodes provide cathodic protection against galvanic corrosion for our submersible pressure transducers. Galvanic corrosion occurs when dissimilar metals are placed in contact with an electrolyte. This condition causes a potential difference to exist between the two metals, causing electron flow between them. Corrosion of the less corrosion-resistant metal is increased and attack of the more resistant metal is decreased. The 820 Sacrificial Anode is clamped to the exterior of a one-inch bore submersible transducer. We also offer a 1" diameter pencil anode, the 825, that attaches to the nose cap of either a ¾" or 1" bore submersible transducer.

ABSOLUTE/SEALED GAGE TRANSDUCER

The sealed gage option for submersible transducers eliminates the need for a vent filter. The standard output of a sealed gauge transducer is 4 mA at 14.70 PSIa. Before ordering a sealed gauge transducer, the customer should determine the altitude (above sea level) of the installation and inform Customer Service of this value before order entry. During manufacture, the output of the transducer will be adjusted to compensate for the altitude difference, if applicable.

POLYURETHANE & ETFE JACKETED CABLE

It is considered best practice when deploying vented gauge format transducers, to provide atmospheric reference at the shortest point of the transducer's cable run. This point is often the end of the transducer cable's vertical drop at the top of the well head or tank.

Most installations of our submersible level transducers connect our polyurethane or ETFE cable to a junction box.

From this junction box, users typically run their own cable to the required instrumentation. Polyurethane-jacketed cable is used for most applications while ETFE material is recommended for more aggressive environments.

Specifications for our standard polyurethane and ETFE jacketed cable are as follows:

Specifications	Standard Submersible Cable	Standard Non-Submersible Cable
Weight	0.05 lbs/ft (0.07 kg/m)	0.025 lbs/ft (0.035 kg/m)
Min. OD	0.28" (7.10 mm)	0.189" (4.8 mm)
Max OD	0.31" (7.87 mm)	0.19" (4.9 mm)
Conductors	2 - 22 AW G	4 - 22 AWG
Insulation Conductors **Outer jacket**	PVC Polyurethane or ETFE	Color coded PVC
Shield	36 gauge spiral tinned copper wire foil shield with drain wire	Aluminum/polyester foil facing outward
Vent Tube	Polyethylene, .060" ID (1.52 mm)	Drain wire 7/32 tinned copper

CHEMICAL RESISTANCE OF POLYURETHANE:

Potable Water, Wastewater, Borax, Butane, Animal Fat, Carbonic Acid, Citric Acid, Cod Liver Oil, Corn Oil, Diesel Fuel, Glycerin, Glycol, Mineral Oils, Potassium Nitrate, Potassium Sulfate, Sea Water, Silicone Oils, Sodium Hydroxide, Stoddard Solvent, Tannic Acid (10), Tartaric Acid, Turbine Oil.

CHEMICAL RESISTANCE OF ETFE:

Acetic Acid (Glacial), Acetic Anhydride, Acetone, Aluminum Chloride, Anti- Freeze, Bromine, Calcium Chloride, Calcium Hydroxide, Chlorine, Copper Chloride, Ferrous Chloride, Hydrochloric Acid, Ketones, Lacquer Thinners, Sodium Hypochlorite, Sulfuric Acid.

The vented cable termination end is specially prepared at the factory to eliminate the potential for moisture migration. Where the lead wires emerge from under the jacket, there's potting material and a shrink tube "boot", every effort should be made to leave this feature intact. Should the cable be longer than needed for the installation, it is recommended that the excess length be accommodated in a service loop and that the potted end of the cable **NOT** be shortened.

The cable attached to this instrument is specifically engineered for submersible applications. The polyurethane outer jacket provides long term reliability under most conditions. The cable should be handled carefully, however, as the jacket may be subject to cutting should it be "raked" over extremely sharp edges. To guard against water incursion should an inadvertent minor cut occur, we have incorporated an exclusive "water block" feature immediately beneath the jacket. The cable is fully shielded, with the shield connected to the metal housing at the transducer end and terminated in a drain wire at the termination or user end. The shield should always be terminated to a good earth ground, unless the transducer is installed in an area where galvanic corrosion is known to be a serious problem.

LIGHTNING PROTECTION

Lightning and surge protection for VDC and 4-20 mA output are available. This is achieved through the use of 2 protectors, one is integral to the transducer housing and one is provided for the outside line located at the surface and grounded to a DIN-Rail. Please remember this option must be factory installed at the time of order entry or as a factory upgrade. **This option cannot be installed in the field.** Contact customer service for details.

Featuring quick response and low clamping voltages, these devices protect against fast rising voltage transients as well as severe current surges associated with lightning discharges up to 20,000 amperes. Following a surge, the protector automatically restores the line to normal operation and awaits the next surge without having to reset a breaker or replace a fuse. The power supply needs to be 12 VDC minimum and limited to 150 mA to avoid lock up of the gas tube after a suppression event. **Transducers installed with this option have a lifetime warranty *against damage due to all voltage surge events***.

NOTE:

- **When using the lightning protection option on 4-20 mA products, users should take into account the additional series resistance of this option when selecting the loop power supply.**
- **This option will increase total loop resistance by 88 Ohms.**
- **The lightning protection option cannot be utilized with a transducer configured with the temperature output option.**

½" MALE NPT CONDUIT FITTING

Submersible level transducers can be attached to a rigid conduit and the cable run through the conduit. To achieve this, all of our submersible transducers can be fitted with an optional ½" NPT male conduit fitting (specify "Electrical Connection Option 4" when ordering) where the cable exits the transducer. This fitting can be mated to a standard rigid conduit.

ELECTRICAL OUTPUTS

We offer the industry standard 0-5 VDC and 4-20 mA outputs. In addition we also offer a variety of voltage output ranges.

REVERSE OUTPUT OPTION

For some applications, it is important to know how far the water is from the top of the tank or the surface of the ground. If specified by the customer, our factory can set the transducer so that zero pressure reads full scale electrical output and maximum pressure reads zero electrical output. Additional charges may apply.

TEMPERATURE OUTPUT OPTION

A temperature output option is available for most transducers having 4-20 mA pressure output. The temperature sensor requires an excitation of 9-28 VDC, its own separate supply connections (see below), and is calibrated for a temperature range of -20 to 60ºC with an accuracy of ±4ºC. Additional charges may apply.

Output Option 6 (4-20mA output for -20 to 60ºC) (mA Reading x 5) - 40 = Temperature ºC

Example:	Reading is 20mA	(20 x 5) - 40 = 60ºC
	Reading is 12mA	(12 x 5) - 40 = 20ºC
	Reading is 4mA	(4 x 5) - 40 = -20ºC

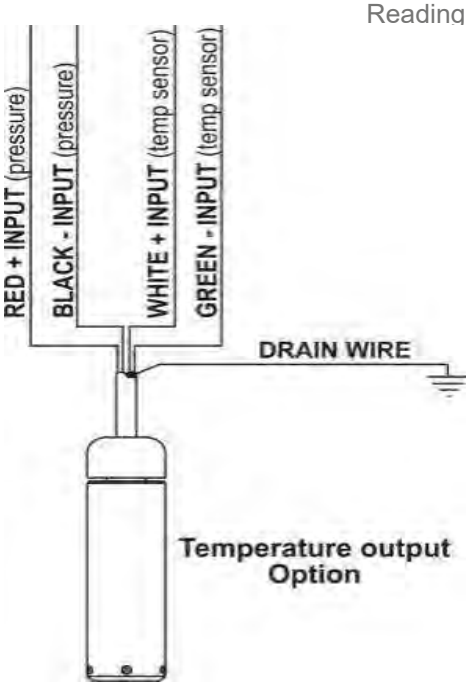

NOTE:

The Temperature Output Option cannot be utilized with a transducer configured with the Lightning Protection option.

CABLE HANGER

We can supply an optional cable hanger (P/N 12-90-0931) to help end users secure the cable. The cable hanger can be positioned anywhere on the cable by pushing the ends together. Once positioned, the cable hanger expands and provides a snug grip on the cable.

When mounting the transducer in a well casing, the cable hanger can be secured to a hook on the well plate. A similar technique can be used when working in stilling wells for surface water level measurement. In this case, the loop- end of the cable hanger can be attached directly to the docking ring of the KPSI Well Caps available in 2” and 4” Diameters. See the KPSI Accessory Catalog for more details.

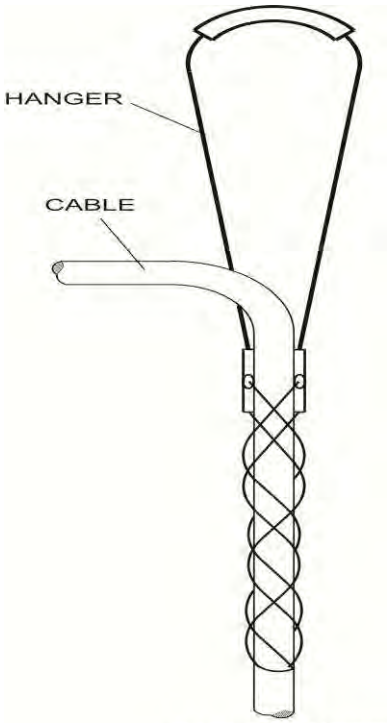

CABLE HANGER

SUBMERSIBLE CABLE SPLICING KIT

Our field-installable cable splice kit (P/N 830) allows you to splice polyurethane and ETFE submersible cable. It is most commonly used for well applications where the more expensive ETFE cable is required for suspension in corrosive media where the liquid level is fairly shallow, but the well is hundreds of feet in depth. It is also used in emergency situations where cable must be spliced together to get an application up and running.

Warranty claims for moisture incursion will be null and void when the splice kit is used.

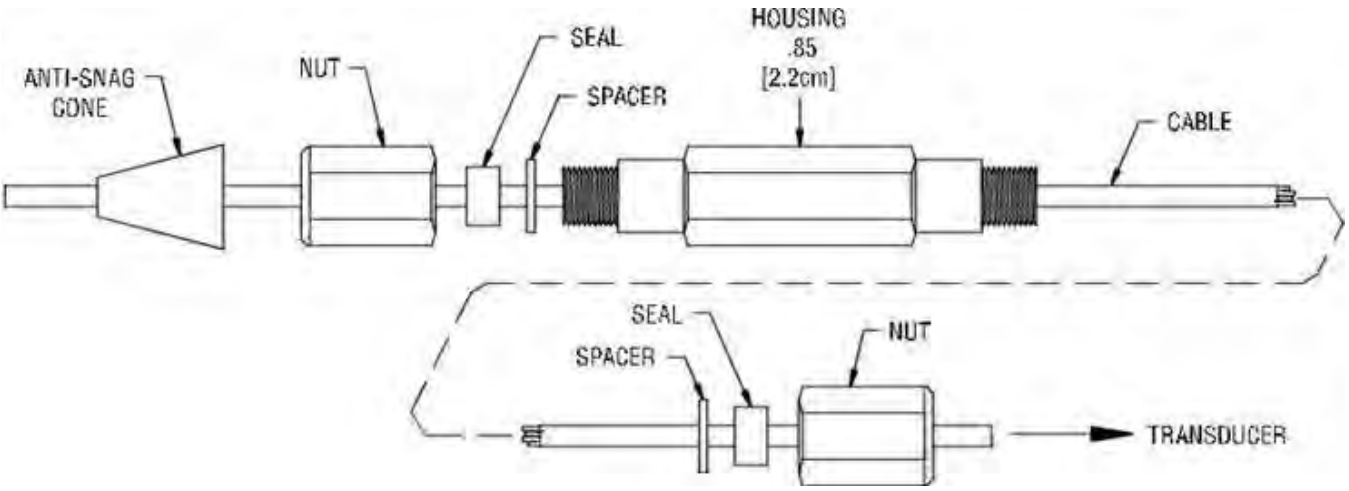

3.0 INSTALLATION & MAINTENANCE TIPS

WARNING: POTENTIAL ELECTROSTATIC CHARGING HAZARD

In hazardous locations:

- **Avoid building up static charge on case of data protector and plastic accessories.**
- **Use damp rag to wipe data protector and plastic accessories to avoid static build up.**

GENERAL INSTALLATION PROCEDURES

The following is important installation and preventive maintenance information. Our Customer Service or Applications Engineering Support staff can provide additional instruction.

1. TRANSDUCER ANCHORS: Most users either suspend our submersible transducers in stilling wells or attach them to rigid conduit. This is done to prevent damage to the transducer from shock caused by water turbulence. It is not advisable to tie your transducer to a pump or to piping, as any problem with the transducer could require that the pump be pulled from the installation. This could prove to be ***very expensive***. (Please refer to the Cable Anchoring Schemes drawing in (**Appendix A**; page16) Some applications use an optional bracket to clamp the transducer to a fixed object (i.e., wall, ladder, step) or require the unit to be suspended without any protective still well or attachment device. In all installations, care should be taken to ensure no damage occurs to the cable.

2. TRANSDUCER SUBMERSION: Damage to submersible cable is one of the most frequent causes of transducer failure. Lower your transducer into the liquid slowly, making sure the cable does not drag over sharp edges and only to the depth necessary. Avoid dropping the unit from the surface. This does not apply to Series 27, 28, and 30 transducers.

3. MOISTURE PROTECTION INSTALLATION: **(**For submersible transducers vented gage pressure format only) ***Always*** install moisture protection immediately after transducer installation**.** Failure to use one could result in premature failure of the transducer; which would not be covered by warranty. If you use a desiccant filter, you should establish a regular maintenance schedule. You should change your vent filter when it is 75% depleted (pink color). Replacement filters are available at a nominal cost from the factory. Do not remove the old vent filter until a new one is available. The most common failure mode of our transducers is moisture and corrosion damage due to lack of use or maintenance of the vent filter. This will allow air into the desiccant filter and allows the transducer to properly vent with changes in barometric pressure.

The KPSI 811 Stainless Steel Vent Filter is housed in a 316 stainless steel body containing desiccant to provide vent tube moisture protection for a minimum of five years without maintenance. A Gore-Tex filter plug provides the vent filter with atmospheric pressure reference. These vent filters are 2.75 inches (7.0 cm) long with a 0.75 inch (1.9 cm) diameter.

To install/replace either the aneroid bellows or the vent filter, simply unplug the old unit from the vent tube and plug the 0.062" x 1" stainless steel connector tube (supplied with each filter or bellows) into the vent tube. (Installation and mounting instructions are supplied with each aneroid bellows and vent filter.) The diagram on page 16 shows typical vent filter and aneroid bellows hookups.

4. CABLE PROTECTION An inexpensive way to protect the cable from damage is to order the submersible pressure transducer with a ½" conduit attachment. Connect an inexpensive flexible 5/8" garden hose to the ½" conduit fitting with an equally inexpensive female PVC ½" NPT x 3/4" NHT swivel fitting, available at your local hardware store

5. BENDING OF CABLE Our polyurethane and ETFE jacketed cables are quite flexible. Care needs to be taken to ensure that when bending the cable to suit your installation you do not crimp the vent tube inside the cable. Consequently, do not bend the cable more than a radius of 1 foot.

6. CABLE COMPRESSION Many users require a compression fitting to secure our ETFE and polyurethane jacketed cable as it enters a junction box. Care needs to be taken that you do not over-tighten the fitting so as to damage the cable.

7. 4-20 MA WIRING when connecting a 2-wire 4-20 mA transducer to a typical power supply and mA meter, verify that the meter has an input impedance of at least 10 Ohms. If you are unsure of the input impedance, then a 10 Ohm resistor may be placed in series with the meter and transducer. Connect the + (red) lead of the transducer to the + terminal of the power supply. If the 10 Ohm resistor is required, connect it to the- (black) lead of the transducer. Use a short length of 22 AWG or heavier wire to connect the + terminal of the meter to the resistor (if it is required) or the - (black) wire of the transducer. Connect the - terminal of the meter to the - terminal of the power supply with a length of 22 AWG or heavier wire. Connect the drain wire from the transducer to a good earth ground. (See **Appendix A**, page **15** for wiring diagram.) Please refer to "**Maximum Cable Lengths and Minimum Supply Voltage**" in **Appendix C**, **page 21** to verify minimum loop supply voltage requirements.

8. VDC WIRING To connect a 3 wire VDC output transducer to a typical power supply and the voltmeter, connect the - terminal of the power supply to the - input terminal of the meter with a length of 22 AWG or heavier wire. Connect the - excitation (black) lead of the transducer to the - input terminal of the meter. Connect the + input terminal of the meter to the signal lead (white) of the transducer. Connect the + terminal of the power supply to the + lead (red) of the transducer. Connect the drain wire to a good earth ground. (See **Appendix A**, **page 15**.)

9. MODELS 745 AND 750 come with a field removable diaphragm protector (one-inch or 25 mm standoff). The diaphragm protector can easily be taken off by removing six (6) fasteners located on the bottom of the unit.

10. SEALED-GAGE TRANSDUCER CONFIGURED FOR ALTITUDE ABOVE SEA LEVEL Since sealed-gauge transducers are normally calibrated at sea level, there may be considerable error induced when used at a higher elevation. If the transducer was calibrated without taking into consideration the difference in atmospheric pressure at sea level and the higher elevation, an offset error will occur. In order to eliminate error due to this difference, the customer must identify the elevation where the transducer will be installed. The nominal atmospheric pressure at the location is calculated and the transducer will be ranged accordingly.

Not all KPSI Transducers are available in a sealed pressure format. Please refer to the appropriate datasheet for availability.

11. POSITION SENSITIVITY **the** transducer should be installed so that the diaphragm located behind the nose cap is oriented in a vertical position, otherwise the unit could exhibit an offset.

GENERAL MAINTENANCE TIPS FOR SUBMERSIBLE TRANSDUCERS

1. DESICCANT MAINTENANCE

WARNING: POTENTIAL ELECTROSTATIC CHARGING HAZARD

In hazardous locations:

- **Avoid building up static charge on case of data protector and plastic accessories.**
- **Use damp rag to wipe data protector and plastic accessories to avoid static build up.**

If you use a desiccant vent filter, you should establish a regular maintenance schedule. You should change your vent filter when it is 75%-90% spent (pink color). Replacement filters are available at a nominal cost from the factory. Do not remove the old vent filter until a new one is available. Remember that our improved 810 SuperDry Vent Filters are designed to be effective for at least one year before requiring replacement. The 811 Stainless Steel Vent Filter is designed to last at least 5 years.

2. CLOGGED NOSE PIECE OR DIRTY DIAPHRAGM

Either of these conditions could result in erroneous readings from your transducer.

WARNING: NEVER attempt to clean your transducer's nose piece or diaphragm with any object. This will dent the sensor diaphragm and cause permanent damage to the transducer.

Your transducer may be cleaned in accordance with the procedures listed below.

3. CLEANING YOUR TRANSDUCER

Materials required:

- (3) Plastic basins 8-12 inches (200-300 mm) across and 4-6 inches (100 - 150 mm) deep
- Supply of clean, lint-free cleaning rags
- Rubber Gloves
- Mild dishwashing detergent such as Dawn®, noted for its grease dissolving/cleaning capabilities
- Enough clear clean water to fill two of the basins
- 32 oz. bottle of "The Works-Tub and Shower Cleaner" available commercially through Wal-Mart, K-Mart, Target, and Ace Hardware stores, or at www.theworkscleans.com/index.html

Preparation: Prior to cleaning your pressure transducer, ensure that all procedures have been followed in the proper cleaning of the cable and transducer to remove any biologically and chemically hazardous materials. The vent filter (or bellows) must be properly attached. The cable should be coiled to ensure ease of handling and it must be protected against the possibility of accidental abrasion and/or penetration of the cable jacket by sharp objects. A lead length of 1 to 1 ½ feet (0.3 - 0.45 m) of cable from the transducer should be allowed to facilitate handling during cleaning.

The protective covering (or similar protective device) that is shipped with each transducer should be attached to the transducer at all times. It should only be removed prior to installation or cleaning.

Your work surface needs to be clean and free of clutter and large enough to accommodate all materials required in addition to the transducer and cable. Rubber gloves should be worn when working with "The Works" cleanser. MSDS available from the manufacturer. Wearing your rubber gloves, fill one of the bowls with fresh water, one with a mild detergent mixed with water, and the last with 16 ounces (0.45 kg) of "The Works".

CLEANING:

Step 1: Immerse the unit in the bowl containing the mild detergent and stir for 20-30 seconds, gently rubbing the exterior casing of the transducer to remove stubborn and built-up dirt and grime. Remove and thoroughly rinse in the bowl containing the fresh water. Rinse and wipe dry.

Step 2: Holding the body of the transducer with one hand so that you are looking at the retaining screen protecting the sensor, carefully remove the sensor nose piece by simply unscrewing it from the transducer body.

Do not touch the sensor diaphragm with your finger or any other object. Also, do not try to dry the inside portion of the transducer, as you risk damaging the pressure sensor.

Step 3: Place the transducer in the bowl containing "The Works" solution, and gently stir for approximately 15-20 seconds. Rinse in the bowl containing clean water and wipe dry the external casing only. Place the nose piece in the same solution for 15-20 seconds, working to thoroughly clean it out. Rinse and wipe dry.

Step 4: Holding the transducer in a vertical position so that you can see the face of the sensor, screw the protective nose piece back into place.

WARNING: POTENTIAL ELECTROSTATIC CHARGING HAZARD

In hazardous locations:

- **Avoid building up static charge on case of data protector and plastic accessories.**
- **Use damp rag to wipe data protector and plastic accessories to avoid static build up**

4.0 WARRANTY AND PRODUCT RETURN PROCEDURE

KPSI products are warranted for a period of two years commencing from the date of shipment to the original purchaser to be clear of title, free from defects in material and workmanship, and in conformity with product specifications.

Any transducer/transmitter that is less than 2 years old (see DOM) which does not meet the product's specifications and exhibits **no obvious physical damage to the housing, sensor, or cable (cuts),** will be replaced under warranty.

Units 2-3 years old: Units that fall within this age group and exhibit no obvious physical damage to the housing, sensor, or cable (cuts), may be replaced at a discounted list price.

Units greater than 3 years old: Units that fall within this age group are not replaced under warranty.

Merchandise Return Procedures

Contact the **Applications Support Group** or the **Customer Service Department** at TE Connectivity if your transducer is not operating properly. Our staff is available for troubleshooting at **(757) 766-1500** or toll free at **1-800-745-8008** during normal working hours, Eastern time. If your transducer or accessory needs to be returned to TE Connectivity, obtain a ***Returned Merchandise Authorization*** (RMA) from the Customer Service Department prior to shipment.

Be prepared to supply the following information when requesting the RMA:

! Part number

! Serial number

! Complete description of problems/symptoms

! **Bill To** and **Ship To** address

! Purchase order number (not required for warranty repairs)

! Customer contact, telephone number, and email

The above information, including the RMA number, must be on the customer's shipping documents that accompany the equipment to be repaired. TE Connectivity also requests that the outside of the shipping container be labeled with the RMA number to assist in tracking the repairs. All equipment should be sent to the following address:

ATTN: KPSI TRANSDUCER REPAIR DEPARTMENT (7-digit RMA number) TE Connectivity

1000 Lucas Way

Hampton, Virginia 23666

Prior to returning to TE Connectivity, the transducer and cable must be cleaned per instructions provided on the cleaning certificate supplied when the transducer was delivered. The certificate can also be found on TE Connectivity's website: www.te.com/sensors

The completed certificate must accompany the transducer when shipped to TE Connectivity. If the transducer has been used in media other than potable water, TE Connectivity customer service must be notified at the same time an RMA number is requested.

TE Connectivity reserves the right to reject any shipment deemed to be unsanitary or environmentally unsafe to handle. If these guidelines are not met, the package will be sent back unopened and at the customer's expense.

Please include the attached vent filter or aneroid bellows with each returned vented gauge submersible transducer.

TE Connectivity will return warranty items prepaid via UPS GROUND. If the customer desires another method of return shipment, TE Connectivity will prepay and add the shipping charges to the repair bill. Expedite premiums and shipping charges are non-refundable.

Incoming freight charges are the customer's responsibility. The customer is also responsible for shipping charges to and from TE Connectivity for all equipment not under warranty.

Once the return is received, it typically takes 5-10 working days for the technician to make a fault determination.

A **60% Purchase Order Cancelation fee** will be applied when the order is canceled within 24 hours of placement The order cannot be canceled after 24 hours of placement.

APPENDIX A

DRAWINGS AND DIAGRAMS

Wiring Diagram 26
Cable Anchoring Schemes 27
Reference Connection Schemes 28
Submersible Cable Termination 28

WIRING DIAGRAMS

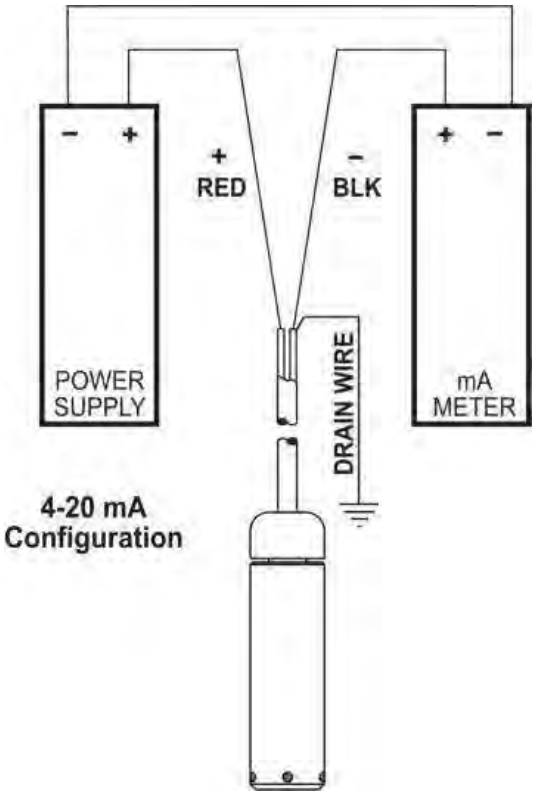

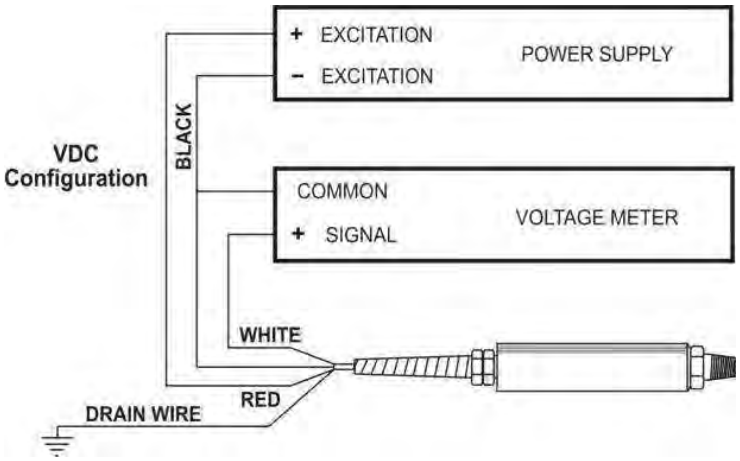

Note:

1. These diagrams depict typical installations.

Refer to your power supply and instrumentation Manufacturer for the specifics of your application

CABLE ANCHORING SCHEMES

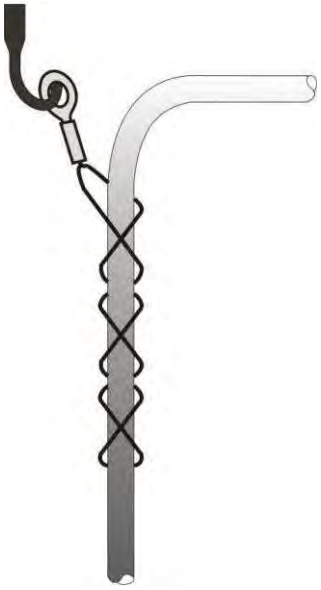

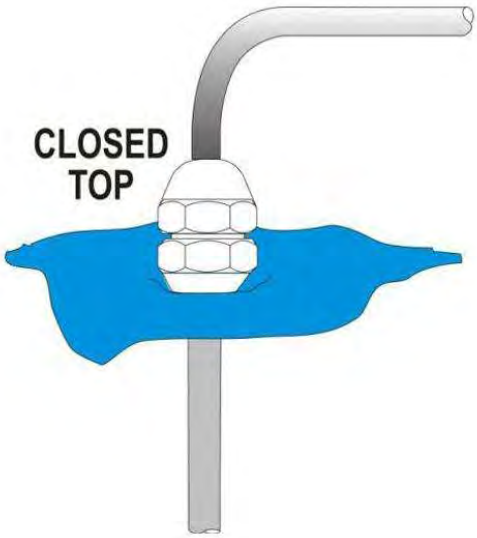

REFERENCE CONNECTION SCHEMES

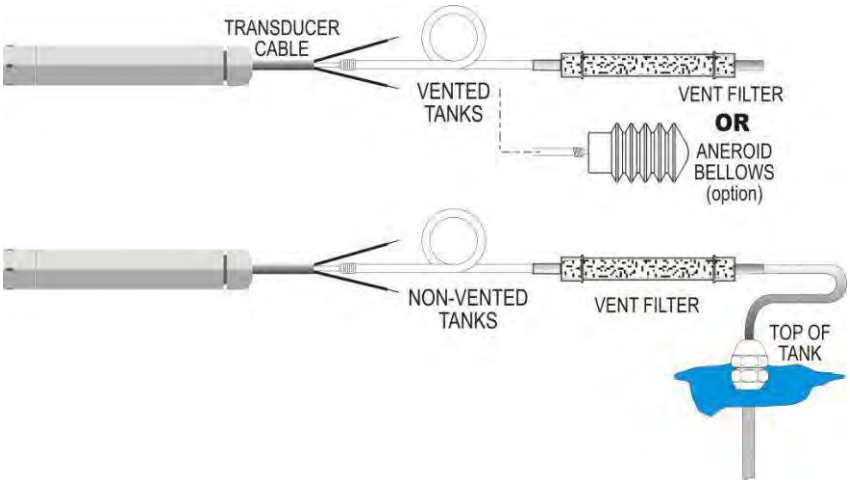

SUBMERSIBLE CABLE TERMINATION

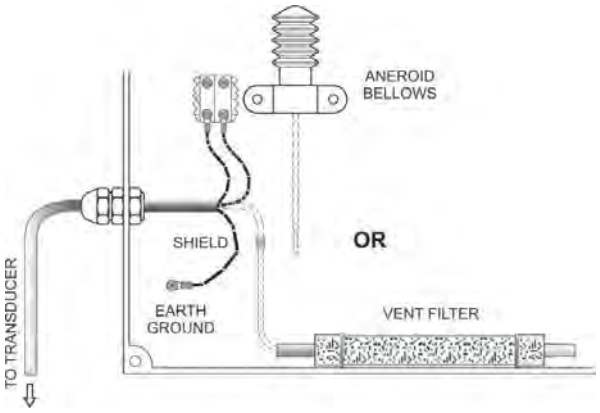

APPENDIX B

1. **Question:** What installation ideas do you have to help me get rid of electrical noise interfering with the signal?

Answer: An ounce of prevention goes a long way. Either try to eliminate the source of noise or move the transducer as far away from it as possible. We strongly encourage you to secure our cable shield to a good earth ground and that you use a 4-20 mA signal output. Armed with these precautions and the fact that many of our transducers are CE approved for electromagnetic interference, you should have few problems.

2. **Question:** The cable on the submersible transducer always seems to get cut and damaged. What am I doing wrong?

Answer: This is the most common problem that our users encounter. Make sure that all of your colleagues and staff understand the importance of handling the cable with care. The cable should not be bent around rough or sharp edges. Always use a cable reel during transport. Where possible, suspend the unit in a perforated 2" (50 mm) PVC pipe and thread the cable through protective conduit to the nearest junction box.

---

3. **Question:** I have an application where the transducer is frequently damaged by voltage spikes. What can be done to prevent this?

Answer: At a minimum, make sure the cable shield is connected to an earth ground as near as possible to the transducer. We can provide a surge protection kit for both our submersible and non-submersible transducers. See page 4. These kits will handle typical spikes that might come in through the power lines as well as surges that travel through the ground due to nearby lightning strikes

4. **Question:** How much impact shock can your submersible transducers withstand?

Answer: Our transducers are not shock tested and the lower pressure ranges can be damaged if dropped from several feet onto an unforgiving surface like concrete. W e recommend that the protective shipping foam remain in place until the unit is installed.

5. **Question:** What is the response time of your transducer?

Answer: From initial power up, the transducer output will stabilize within a fraction of a second. The frequency response is rather low, probably less than 1 kHz, but it depends on the application, the media, plumbing, etc. Call our factory for application assistance if frequency response is critical in your application.

---

6. **Question:** How do I attach your vent filter or aneroid bellows to my cable vent tube?

Answer: The vent filter can be mounted anywhere convenient, preferably out of the weather. It can be mounted in any position and connects to the cable vent tube via the extension tube with metal connector tube provided. The aneroid bellows must be mounted in a way that its movement is not encumbered. It is provided with a mounting base.

7. **Question:** What is the best way to mark my cable?

Answer: Use white vinyl marking tape available from your local hardware or electronic stores. These same stores may also sell cable marking kits.

8.	**Question:**	Any ideas for preventing marine growth on your submersible transducers?
	Answer:	You might want to try waterproof grease. Remove the threaded nose cap to facilitate applying the grease. **Take care not to damage the diaphragm when applying the grease and not to trap air bubbles against the sensing diaphragm.**
9.	**Question:**	How many measurements can you make before the diaphragm on the sensor fails?
	Answer:	In normal operation - millions of cycles. We find that sensor failure is rarely due to diaphragm fatigue.
10.	**Question:**	What is the turnaround time on repairs?
	Answer:	Once we receive a unit into our facility it takes less than 10 working days to complete an evaluation.
11.	**Question:**	What is the longest length of cable you have attached to a submersible transducer?
	Answer:	Two thousand feet (610 meters).
12.	**Question:**	Why do you use 316 SS housings and sensors for your standard transducers?
	Answer:	It offers a good combination of corrosion resistance and reasonable cost. As an option, we do offer titanium for more aggressive environments.
13.	**Question:**	What wire gauge should I limit myself to when connecting to your 22 AWG wire?
	Answer:	Use 22 AWG or heavier.
14.	**Question:**	Does it make any difference if I mount the transducer in a vertical or horizontal position?
	Answer:	Yes. Our units will experience a certain amount of position sensitivity. You should mount it in a vertical position throughout the measurement cycle. If you lay the transducer down, the user must realize than an offset will occur.
15.	**Question:**	What happens when you freeze your transducer in a column of water?
	Answer:	We have frozen our transducers in a container of water in a home freezer, with no resulting damage. However, depending on the level range of the unit, over pressure of the unit is possible. In harsh environments where debris is common and ice shifts, you might expect damage to both the transducer and cable.
16.	**Question:**	Why would I choose a KPSI Transducer versus a competitor?
	Answer:	Reliable, long lasting products Rapid delivery Lightning protection lifetime warranty Excellent pre & post sales/application support No hassle service

APPENDIX C

FIELD CHECK TROUBLESHOOTING PROCEDURE

The following is a quick field checkout procedure for KPSI Level and Pressure Transducers. It will be referred to throughout the troubleshooting section.

Should a problem be encountered with a transducer or transmitter, it is sometimes helpful to test the transducer independently from the rest of the system, thereby establishing where to concentrate the troubleshooting effort.

Below is a simple hookup diagram for the most common types of electrical output, a 0-5 VDC transducer and a 4-20 mA transmitter. In either case, the “power supply” can be a common 12 volt lantern battery, or even a 9 volt transistor radio battery, although the lifetime of a 9 volt battery will be limited. The meter should be a digital type capable of reading at least 2 digits to the right of the decimal point. Use 22 gage or heavier hookup wire or clip leads for jumpers. If your unit has other than a 0-5 VDC or 4-20 mA output, please call Applications Support at **(800) 745-8008** for assistance.

Once your transducer is correctly configured per one of the diagrams below, orient the transducer in a vertical position with the pressure port down and then read the zero output on your meter. For a 0-5 VDC output, the zero should be between 0 and 0.10 volts, and for a 4-20 mA output, between 3.80 and 4.20 mA. For Series 300 the values do not change for VDC output but the values for mA are between 3.80 and 4.20 mA. If the output is outside of these limits, you may, at your option, choose to troubleshoot the transducer per the suggested measurements shown below. Otherwise, contact our Customer Service Department at **(800) 745-8008** for a Return Material Authorization number (RMA).

If the zero output is within these limits, the problem will more than likely be found elsewhere in your system

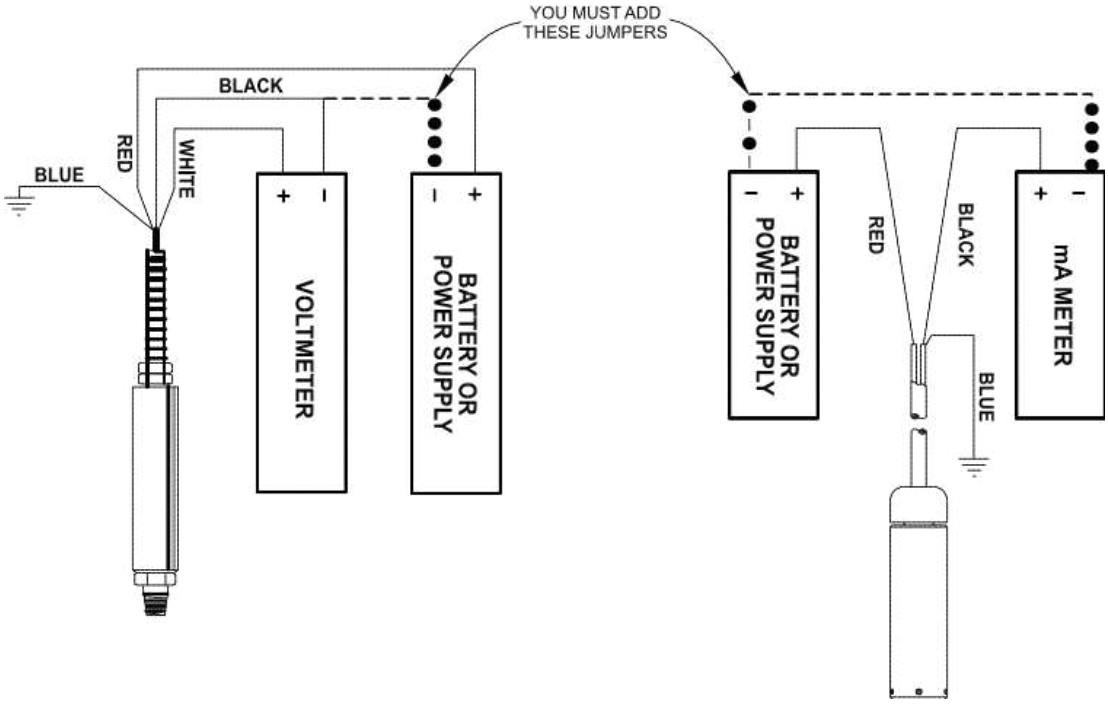

When an error is observed at a customer's installation, it is important to determine if the fault lies in the transducer or the instrument reading the transducer signal, i.e. digital panel meter, programmable logic controller, etc. . To do this, a second instrument should be used to confirm the observations. The second instrument may be a handheld DMM (Digital Multi-Meter) or a dedicated milliameter capable of reading 4-20 mA of current to a resolution of at least 0.1 mA. The diagram above illustrates the attachment of the meter in series with the black (negative signal) wire of the transducer using a 9-28 VDC power supply for transducer excitation. Some suggested power supplies are:

• 1 - 12 VDC automotive battery.

• 2 - 6 VDC lantern batteries connected in series (for a total of 12 VDC).

• 2 - 9 VDC transistor batteries connected in series

(For a total of 18 VDC).

Batteries are suggested to power the transducer during testing to eliminate the possibility that line noise is passing through an improperly filtered, grounded, or damaged power supply. All measurements should be recorded and sent to TE Connectivity along with the transducer to assist in the evaluation process.

FURTHER MEASUREMENTS:

VDC Output Transducer	Should Read	4-20mA Output Transducer	Should read:
+Excitation (white) to Shield (drain)	> 2.5 Mohms	+Excitation (red) to Shield (drain)	> 2.5 Mohms
-Excitation (black) to Shield (drain)	> 2.5 Mohms	-Excitation (black) to Shield (drain)	> 2.5 Mohms
+Output (red) to Shield (drain)	> 2.5 Mohms	Shield (drain) to Housing	< 2 ohms
Shield (blue) to Housing	< 2 ohms		

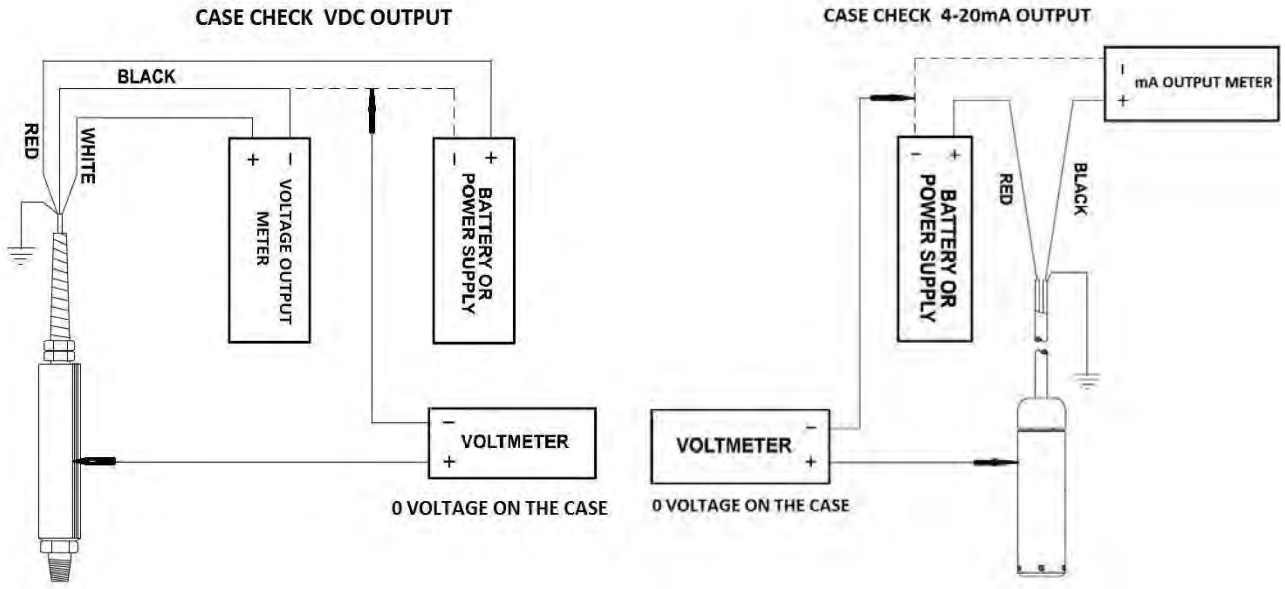

MAXIMUM CABLE LENGTHS AND MINIMUM SUPPLY VOLTAGE

The maximum length of cable to be used with our submersible transducers is largely dependent upon the type of electrical output of the transducer. For a 0-5 VDC output, a maximum cable length of 100 feet (30 m) is recommended. A voltage output is more susceptible to electrical interference than a 4-20 mA signal. A 4-20 mA signal can be transmitted much longer distances, depending upon such factors as temperature, wire size, length of the wire, power supply, and voltage requirements of any devices to be powered. At 25ºC the 22 AWG conducting copper wire used in our polyurethane jacketed cable has a resistance of 16.45 ohms per 1000 feet (304 m).

Using Ohms Law (E=IR) where E=voltage, I=current and R =resistance, one finds that a 20 mA signal requires.329 volts to drive it along 1000 feet (304 m) of 22 AWG copper wire (E=16.45 x .020). This drop is seen on both the supply and return wire for a total loop voltage drop of 0.658 volts To find out how much voltage is required to drive our Series 700 submersible level transducer's 4-20 mA signal 10,000 feet, just add the minimum power requirement of the 700 (9 VDC) to the resistance offered by 10,000 feet (3048 m) of our polyurethane jacketed cable (10,000÷1000 x .658=6.58). The resulting power requirement is 15.58 VDC (9 + 6.58).

Connect the cable shield (drain wire) to a good earth ground. This will protect the transducer from relatively minor transient voltages. The only exception to this rule is if high rates of electrolytic corrosion have been previously experienced with grounded submersible devices. In this case it may be better to leave the shield disconnected.

Please note: When using products with the lightning protection option on 4-20 mA products, users should take into account the additional series resistance of this option when selecting the loop power supply. This option will increase total loop resistance by 88 Ohms.

TROUBLESHOOTING TECHNIQUES

1.	**Symptom**:	***Transducer fails to give output of any kind.***
	Procedure:	Isolate the problem to either the transducer or the power supply/readout. See the Quick Check Procedures (above) for this check. If it can be determined that the transducer is no longer operable, remove it from service for further analysis. If the transducer output falls within the limits described above, the fault lies somewhere else in your system.
2.	**Symptom:**	**Transducer has failed and has been removed for analysis.**
	Procedure:	Inspect the cable for physical damage. Cuts in the cable jacket can result in liquid incursion into the transducer housing, which can cause permanent damage. If operational, the cable can be repaired by using a splice kit (P/N 830) supplied by TE Connectivity. Inspect the transducer housing. It should be intact and free of corrosion. If the outer surface of the transducer is pitted, this could be an indication of galvanic corrosion caused by stray ground currents. If this is the case, the transducer will probably require replacement. If the external case exhibits none of these characteristics, carefully unscrew the nosepiece and look into the pressure sensing end of the transducer. The concentric rings of the sensing diaphragm should be visible. If they are not, it could be that residue has accumulated on the diaphragm, preventing it from responding properly to pressure changes. The transducer can be cleaned by gently swishing the transducer back and forth in a bucket of warm, soapy water until the residue softens and washes off. (See **Cleaning Your Transducer**, page 8.) ***Under no circumstances should any object or tool be used to remove residue from the sensing diaphragm or else permanent damage will be done.*** If cleaning the diaphragm does not solve the problem, the transducer should be returned to the factory for repair or replacement.

3. **Symptom:** ***Transducer develops a negative offset and gets worse over time (actual level exceeds specified level).***

Procedure: This may be a sign that moisture has entered the reference (vent) tube in the cable and is inside the transducer housing. This is usually the result of not maintaining the desiccant vent filter or of operating the transducer without a desiccant filter or aneroid bellows. Suspend both the cable and transducer in a vertical position (with vent tube down), overnight to allow water to drain from the transducer and vent tube.

4. **Symptom:** ***Transducer suddenly fails during or just after a nearby lightning event.***

Procedure: This failure is usually caused by overvoltage due to ground transients resulting from a direct or indirect lightning event. These transients can travel distances of a mile or more.
The transducer may be returned to the factory for repair and optional retrofit of our ***lightning protection system.*** This system carries a lifetime warranty against transducer damage due to lightning.

5. **Symptom:** **Transducer response to pressure/level input changes becomes sluggish.**

Procedure: This is usually a sign that the sensing end of the transducer has become fouled with residue. The transducer must be removed from service and the sensing diaphragm cleaned as described in Item 2, (warm, soapy water). If fouling persists, the transducer may be replaced with a Series 705 or Series 750 (non- fouling) transducer, which is specifically designed for trouble-free operation in a high residue environment.

6. **Symptom**: ***Output reading is within limits but "freezes" at one point.***

Procedure: In certain environments "crust" may form over the sensing diaphragm, preventing the sensor from identifying change in level. Removing the transducer from service and cleaning it (as described in Item 2) will generally solve the problem. To combat marine growth, you might try wrapping the transducer with copper wire similar to that found in wire scouring pads for cleaning dishes. Marine growth occurs on the copper and eventually erodes the copper and drops off or the copper is manually removed during routine maintenance. Alternatively, there are various companies that will impregnate/coat the 316 stainless steel with anti- fouling chemicals of coatings. Level transducers temporarily removed from the well or sump should not be stored dry, but should be stored in a bucket of fresh water in order to prevent "crust" formation.

7. **Symptom**: ***Readings increase very slowly over time***.

Procedure: Our cable is shipped coiled and consequently takes time to straighten when installed. Attaching a weight to the transducer (e.g., one of our sacrificial anodes) will help. To prevent cable stretch with lengths greater than 200 feet (60 m), secure the Kevlar fibers (just under the cable jacket) to your junction box or other secure object.

8. **Symptom:** ***No electrical output from your transducer.***

Procedure: Check all electrical connections to ensure they are correct and secure.
Double check your power supply or use a battery (as described previously) to ensure the transducer is getting power. If all checks OK, the problem could be a circuit board or the sensor in your transducer. The Unit must be returned to the factory for evaluation. The most probable cause of this type of failure is damage to the submersible cable jacket allowing water to leak down the cable and into the transducer housing or lightning damage.

9. **Symptom**: ***Formation of marine growth on a submersible transducer.***

Procedure: Certain transducer construction materials, for example, 316 stainless steel, attract marine life (snails) and algae. Clean the transducer diaphragm by soaking it in a bucket of warm water with a non-aggressive cleaning solution. You can also coat the transducer with marine grease. This may be the most effective and inexpensive way to protect your transducer.

10. **Symptom:** ***Submersible transducer exhibits corrosion or pitting on body or diaphragm***

Procedure: Dissimilar metals (for example, your transducer housing and your pump housing) in an electrolytic environment (fluid in your well) can lead to galvanic corrosion of the metal that is nearer the anodic end of the galvanic series. Likewise, a voltage potential between the ground wire of the transducer and the ground of other equipment in the well can lead to ***galvanic corrosion***. Installation of a P/N 820 or 825 sacrificial anode will help protect your transducer from ***galvanic corrosion***. Our sacrificial anodes are made of a zinc alloy that, being nearer the anodic end of the galvanic series than the 316 stainless steel or titanium housing of the transducer, will corrode before the transducer.

11. **Symptom**: ***The transducer is buried in dirt or silt and the readings seem to be erroneous.***

Procedure: Use of a piezometer nosepiece in this application would help. This nosepiece can be easily installed in the field and features a very fine screen to keep dirt from fouling the diaphragm, but allows the diaphragm to sense moisture levels.

12. **Symptom:** ***Transducer has an offset error.***

Procedure: Our submersible transducers perform best when the sensing end is pointing in a downward manner. Keep in mind that you can experience offset error due to the position sensitivity or orientation change of the sensor. Offset errors are more prominent in low pressure applications with the sensing end of the transducer lying flat or pointing upward.

13.

Symptom:

I am testing a Series 700 4-20mA sensor for use with our data logger. On page 15 of the KPSI Level and Pressure Transducers User's Manual, I see the standard 4-20mA configuration. Does the recording channel of my data logger become the mA meter?

Procedure:

Most data loggers cannot measure current (mA) directly. When this is the case a load resistor must be used to convert the current (mA) output into an appropriate voltage. If the User's Manual for your particular instrument does not illustrate a preferred method for recording current (mA) data then you should attach your transducer signal wires to your data logger in the following manner.

Transducer red wire - Data Logger Excitation Terminal (The minimum excitation for a Series 700 Transducer is 9VDC) Transducer black wire – Data Logger signal input (+) terminal Attach a Load resistor between the Data Logger signal input (+) terminal and the Data Logger signal input (-) terminal. Attach a separate piece of wire between the Data Logger signal input (-) and analog ground. Attach a separate piece of wire between the Data Logger signal input (-) and analog ground. In this configuration you will turn your data logger into a milliammeter. The size of your load resistor can be calculated in the following manner.

D/0.02=R

Where: Data logger input range = D
Full scale output of transducer = 0.02
A (20 mA)
Load Resistor Value = R

Pick an appropriate standard value

250 Ohms results in 1 to 5 VDC at 4 and 20 mADC

125 Ohms results in 0.5 to 2.5 VDC (500 to 2500 mV) at 4 and 20 mA

At this point the discussion needs to address IR loss (voltage drop) in series circuits. Note that Series 700 transducers need a minimum of 9VDC to operate correctly. When the transducer is operating correctly it will output a current which, when driven through a resistor, will generate some amount of voltage drop. If the resistor value is 250 Ohms then the voltage measured across that resistor will be 0.004 A * 250 Ohms = 1.000 VDC and 0.020 A * 250 Ohms = 5 VDC. Notice that, if the available voltage from the data logger is12 VDC then 12 VDC - 5 VDC = 7 VDC which is less than the voltage required by the transducer to operate. If this scenario were to occur the transducer would actually stop functioning correctly when its output reached 12 mA (50% of transducer full scale range). In this case the appropriate choice for a load resistor value is 125 Ohms.

14. **Symptom**: ***I have a Series 700 4-20mA transducer rated for 7.5 PSIG attached to a pressure source that is outputting 7.5 PSIG. With 20VDC being supplied I am getting 19.94 mA. I can't find the upper range allowance for the sensor, but this seems low to me. Does this mA reading fall into the acceptable range for the transducer with the settings I've specified?***

Procedure: When evaluating a transducer it is sometimes convenient to make some broad generalizations in order to rapidly determine the condition of the unit. In general, transducers that output a 4-20 mADC signal have a 16 mA span (20-4 = 16). If the transducers accuracy is reported as being some percentage of its full- scale range then the following table could be used in conjunction with the instructional notations to determine whether a more detailed analysis of data quality is required.

Model	Accuracy (Accuracy in mA)	
700	±0.16 ma	1.00%FS
710	±0.08 ma	0.50%FS
720	±0.05 ma	0.25%FS
730	±0.016 ma	0.10%FS
735	±0.008 ma	0.05%FS

In order to approximately determine how many milliamps a transducer should output at a given depth:

1. Determine the depth (in feet) at which the transducer is sited.

2. Divide the depth value (from step 1) by the transducer full-scale range (in feet). - Record the value.

3. Multiply the value calculated in step 2 by 16 (the transducer span in milliamps).

4. Add 4 to the product of step 3. This is the approximate value in milliamps that should be output by the transducer at its current depth.

In order to approximately determine the depth of a transducer (in feet) using a given value of milliamps:

1. Divide the full-scale range of the transducer (in feet) by 16. Record this value.

2. Subtract 4 from the milliamp output of the transducer. Record this value

3. Multiply the result of step one by the result of step 2. This is the approximate depth at which the transducer is sited.

If the resulting numbers are reasonably close to some verified value for current water depth, then the unit is functioning. In order to determine the quality of measurement, additional steps need to be performed

APPENDIX D

CALIBRATION CALCULATIONS

TE Connectivity ships a calibration sheet with every KPSI Transducer. This sheet lists the actual values that were output by the transducer, when it was being manufactured, at several different pressures. In addition, two coefficients are provided that can be used to calculate the actual depth from any given mA output value. These coefficients are derived from a Least Squares Best Fit Straight Line (BFSL) calibration using the data listed on the datasheet. Our accuracy specification is referenced to the line described by the BFSL coefficients and so the transducer may not output exactly 4 mA at zero pressure and 20 mA at full- scale. On the next page is an example of data for a typical transducer.

In this case, even though the offset or 0 PSIG output was 4.0017 mA and the full-scale point was 20.0219 mA the unit actually performed better than its specified accuracy of ±0.25% of full-scale range as indicated in the Error % FS column. The calculation for pressure is illustrated below:

PSIG = (Span*Output (in mA)) + Offset

And, to convert to feet of water

Feet H2O = PSIG * 2.3073

Calibration Report

Test Date: 08/10/2012
Test Time: 7:52:10
Model No: 730T14A0A005.000000.000C10020A
Serial No: 1206816
Pressure Range: 0.00 to 5.00 PSIG
Excitation: 9-28 VDC
Output: 4-20 mA

Test Temps: Room = 25.0 DegC

PCU Serial No: TRF146

Target Test Pressure	BFSL Rm Temp Outputs	Run #1 Rm Temp Outputs	Run #1 Error %FSO	Run #2 Rm Temp Outputs	Run #2 Error %FSO
0.00	3.9894	3.9940	0.0286	3.9918	0.0149
1.00	7.1913	7.1888	-0.0155	7.1893	-0.0123
2.00	10.3936	10.3901	-0.0217	10.3914	-0.0138
3.00	13.5951	13.5942	-0.0058	13.5953	0.0010
4.00	16.7979	16.7991	0.0079	16.7988	0.0057
5.00	19.9999	20.0010	0.0073	20.0006	0.0048
4.00	16.7977	16.7999	0.0136	16.7995	0.0114
3.00	13.5961	13.5956	-0.0031	13.5951	-0.0063
2.00	10.3935	10.3920	-0.0095	10.3911	-0.0151
1.00	7.1911	7.1888	-0.0144	7.1895	-0.0101
0.00	3.9896	3.9926	0.0188	3.9917	0.0135

Maximum Static Error: 0.0286 %FSO

Maximum Non-Repeatability: 0.0137 %FSO

Electrical Termination:
RED: +SUPPLY
BLACK: -SUPPLY
BLUE: SHIELD

Slope1: 0.3123 PSIG/mA
Zero Offset 1: 0.0000 PSIG

Slope2: 3.2023 mA/PSIG
Zero Offset2: 3.9889 mA

Conversion Factor: 1.0000

Calculations:

Method 1: Calculate pressure in desired units, using sensor's output as independent variable.
PSIG = 0.3123 (mA - 3.9889) + 0.0000

Method 2: Calculate predicted sensor output in desired units using pressure as the independent variable.
mA = 3.2023 (PSIG - 0.0000) + 3.9889

NORTH AMERICA

Measurement Specialties, Inc.,
a TE Connectivity Company
1000 Lucas Way
Hampton, VA 23666
United States
Phone: +1-800-745-8008
Fax: +1-757-766-4297
Email: WL.Sales@te.com

EUROPE

MEAS Deutschland GmbH
a TE Connectivity Company
Hauert 13
D-44227 Dortmund
Germany
Phone: +49-(0)231-9740-0
Fax: +49-(0)231-9740-20
Email: customercare.dtmd@te.com

ASIA

Measurement Specialties China Ltd.,
a TE Connectivity Company
No. 26, Langshan Road
High-tech Park (North)
Nanshan District, Shenzhen 518057
China
Phone: +86-755-33305088
Fax: +86-755-33305099
Email: customercare.shzn@te.com

te.com/sensorsolutions

Measurement Specialties, Inc., a TE Connectivity company.

Measurement Specialties (MEAS), American Sensor Technologies (AST), TE Connectivity, TE Connectivity (logo) and EVERY CONNECTION COUNTS are trademarks. All other logos, products and/or company names referred to herein might be trademarks of their respective owners.

The information given herein, including drawings, illustrations and schematics which are intended for illustration purposes only, is believed to be reliable. However, TE Connectivity makes no warranties as to its accuracy or completeness and disclaims any liability in connection with its use. TE Connectivity's obligations shall only be as set forth in TE Connectivity's Standard Terms and Conditions of Sale for this product and in no case will TE Connectivity be liable for any incidental, indirect or consequential damages arising out of the sale, resale, use or misuse of the product. Users of TE Connectivity products should make their own evaluation to determine the suitability of each such product for the specific application.

© 2016 TE Connectivity Ltd. family of companies All Rights Reserved.

Appendix C-4
PLC Program Printout

Controller Project4221
Controller Fault Handler
Power-Up Handler

Tasks

MainTask
MainProgram
MainRoutine
A08_00_FCVxx010200_Scl
CF Valve Pos. Feedback Scaling
A08_01_FITxx010100_SclMinMaxAvg
WCC Flow Scaling, Minimum, Maximum, Average
A08_02_FITxx010200_SclMinMaxAvg
CF Flow Scaling, Minimum, Maximum, Average
A08_03_FITxx010301_SclMinMaxAvg
ODC EW-1 Flow Scaling, Minimum, Maximum, Average
A08_04_FITxx010302_SclMinMaxAvg
ODC EW-2 Flow Scaling, Minimum, Maximum, Average
A08_05_FITxx050100_SclMinMaxAvg
Effluent Flow Scaling, Minimum, Maximum, Average
A08_06_LITxx020100_SclMinMaxAvg
Influent Tank Level Scaling, Minimum, Maximum, Average
A08_07_LTxxx010101_SclMinMaxAvg
WCC, Well EW-1 Level (Down Well) Future Scaling, Minimum, Maximum, Average
A08_08_LTxxx010303_SclMinMaxAvg
ODC, Well EW-1 (PZ-3) Level (Outside) Scaling, Minimum, Maximum, Average
A08_09_LTxxx010200_SclMinMaxAvg
Consolidation Facility Level (Sump) Scaling, Minimum, Maximum, Average
A08_10_LTxxx010301_SclMinMaxAvg
ODC, Well EW-1 Level (Down Well) Scaling, Minimum, Maximum, Average
A08_11_LTxxx010302_SclMinMaxAvg
ODC, Well EW-1 (PZ-4) Level (Outside) Scaling, Minimum, Maximum, Average
A08_12_LTxxx010102_SclMinMaxAvg
WCC, Well EW-2 Level (Down Well) Future Scaling, Minimum, Maximum, Average
A08_13_LTxxx010304_SclMinMaxAvg
ODC, Well EW-2 Level (Down Well) Scaling, Minimum, Maximum, Average
A08_14_LTxxx010305_SclMinMaxAvg
ODC, Well EW-2 (PZ-8) Level (Outside) Scaling, Minimum, Maximum, Average
A08_15_LTxxx010306_SclMinMaxAvg
ODC, Well EW-2 (PZ-7) Level (Outside) Scaling, Minimum, Maximum, Average

A09_00_PDITx030100_SclMinMaxAvg
Cartridge Filter, M-3-1, Pressure Diff. Scaling, Minimum, Maximum, Average
A09_01_PDITx040100_SclMinMaxAvg
GAC-1, M-4-1, Pressure Diff. Scaling, Minimum, Maximum, Average
A09_02_PDITx040200_SclMinMaxAvg
GAC-2, M-4-2, Pressure Diff. Scaling, Minimum, Maximum, Average
A09_03_Pxxxx010301_Scl
ODC, Well EW-1 Speed Feedback Scaling
A09_04_Pxxxx010302_Scl
ODC, Well EW-2 Speed Feedback Scaling
A09_08_LTxxx010103_SclMinMaxAvg
WCC, Well EW-1 (W10) Level (Outside) Scaling, Minimum, Maximum, Average
A09_09_LTxxx010104_SclMinMaxAvg
WCC, Well EW-1 (P10) Level (Inside) Scaling, Minimum, Maximum, Average
A09_10_LTxxx010105_SclMinMaxAvg
WCC, Well EW-2 (W12) Level (Outside) Scaling, Minimum, Maximum, Average
A09_11_LTxxx010106_SclMinMaxAvg
WCC, Well EW-2 (P12) Level (Inside) Scaling, Minimum, Maximum, Average
Alarms
CF_FCV_Control
CF_Sump_Pump
InputOutput_Mapping
Discrete and Analog Input Mapping
Motor_Run_Time
ODC_EW1_Control
ODC_EW2_Control
Periodic_Reset
TB_ChemFeed_Pump
Treatment Building Chemical Feed Pump
TB_DAT_Blower
Treatment Building Diffused Aeration Blower
TB_Influent_Pump
Treatment Building Influent Tank Pump
TB_Sump_Pump
Treatment Building Sump Pump
WCC_EW1_Control
WCC_EW2_Control

Utility

Utility

MainRoutine
PLC_Status
Unscheduled Programs / Phases

Motion Groups

Ungrouped Axes

Add-On Instructions

UDI_DOW
The DOW instruction calculates the day of the week, based on the Year, Month, and Day and places the result in the DayOfWeek.
Logic

UDI_DST
The DST instruction calculates daylight savings time and sets the "Adjust for Daylight Saving (+00:00) bit in the processor.
Logic

UDI_SNTP_QUERY
SNTP Query and Clock Sync Instruction
Logic
Prescan
Prescan

UDI_SNTP_TIMEADD
DateTime := DateTime + Time
Logic
Add Date/Time plus Time to give new Date/Time

UDI_SNTP_TIMEDIFF
Time := DateTime - DateTime
Logic
Calculate Days between Dates and Time Difference

Data Types

User-Defined
UDT_DateTime
Date and Time
UDT_MajorFaultBITs
UDT_MinorFaultBITs
UDT_PLC_Status
PLC status data
UDT_SKT_Address
UDT_SKT_Create_Source
UDT_SKT_Open_Connection
UDT_SKT_Read_Destination
UDT_SKT_Read_Source
UDT_SKT_SNTP_Data

- **UDT_SKT_UDP_DATA**
- **UDT_SKT_Write_Source**

Strings

- **STRING**

Add-On-Defined

- **UDI_DOW**
  The DOW instruction calculates the day of the week, based on the Year, Month, and Day and places the result in the DayOfWeek.
- **UDI_DST**
  The DST instruction calculates daylight savings time and sets the "Adjust for Daylight Saving (+00:00) bit in the processor.
- **UDI_SNTP_QUERY**
  SNTP Query and Clock Sync Instruction
- **UDI_SNTP_TIMEADD**
  DateTime := DateTime + Time
- **UDI_SNTP_TIMEDIFF**
  Time := DateTime - DateTime

Module-Defined

- **AB:1756_DI:C:0**
- **AB:1756_DI:I:0**
- **AB:1756_DO:C:0**
- **AB:1756_DO:O:0**
- **AB:1756_DO_Fused:I:0**
- **AB:1756_IF16_Float_No_Alm:C:0**
- **AB:1756_IF16_Float_No_Alm:I:0**
- **AB:1756_NII_Struct_No_Alm:C:0**
- **AB:1756_NIO_Struct:C:0**
- **AB:1756_OF8_Float:C:0**
- **AB:1756_OF8_Float:I:0**
- **AB:1756_OF8_Float:O:0**

Trends

- **InfluentTank**
- **PID_FCVxx020100**
- **PID_Pxxxx010301**
- **PID_Pxxxx010302**

I/O Configuration

1756 Backplane, 1756-A13

- **[0] 1756-L71 Project4221**
- **[1] 1756-ENBT/A Ethernet_Module**
  - **Ethernet**

- **[2] 1756-IA16**
- **[3] 1756-IA16**
- **[4] 1756-IA16**
- **[6] 1756-OA16**
- **[8] 1756-IF16**
- **[9] 1756-IF16**
- **[11] 1756-OF8**

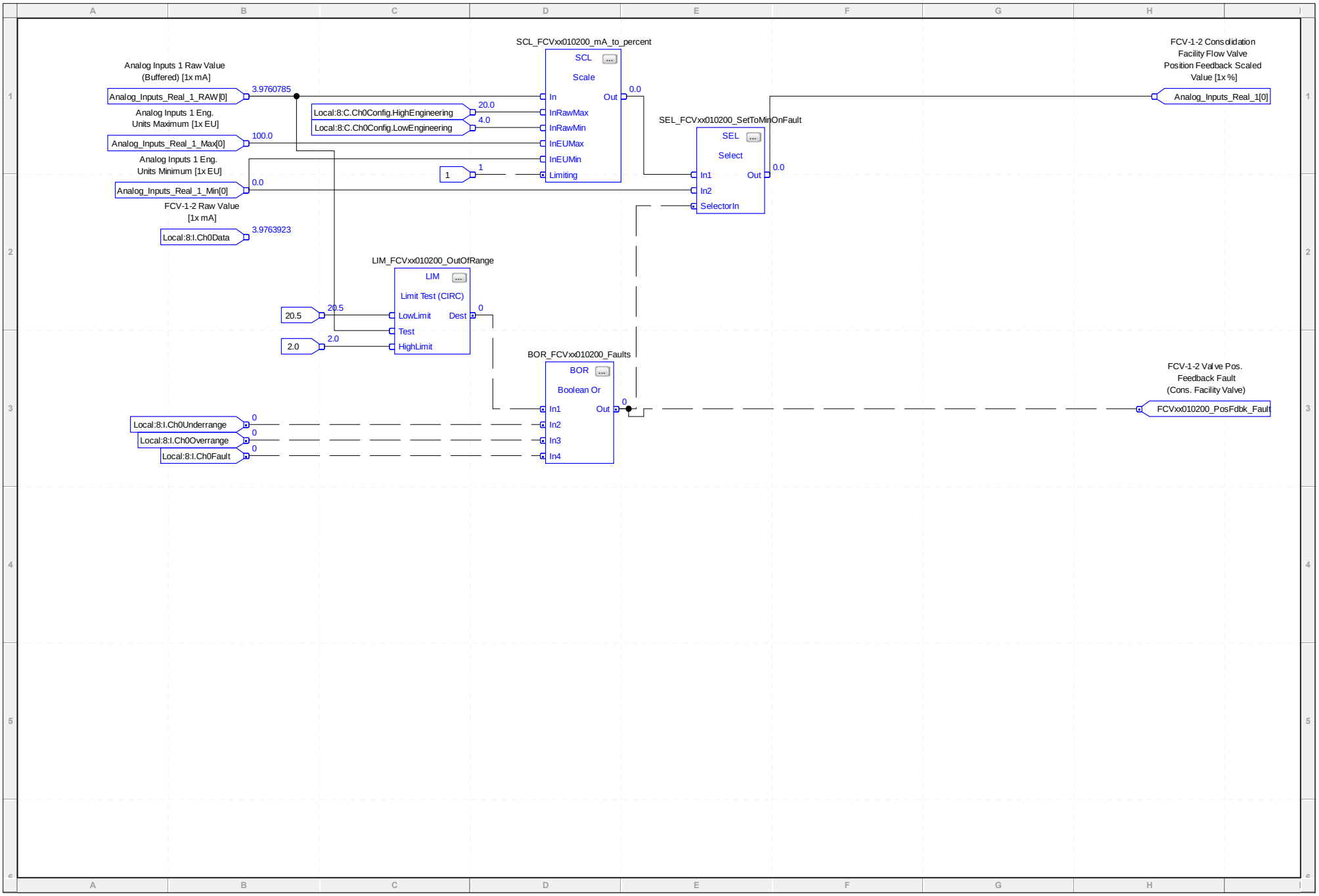
SCL_FCVxx010200_mA_to_percent
SCL
Scale
In
Out
InRawMax
InRawMin
InEUMax
InEUMin
Limiting
Analog Inputs 1 Raw Value (Buffered) [1x mA]
Analog_Inputs_Real_1_RAW[0]
3.9760785
Analog Inputs 1 Eng. Units Maximum [1x EU]
Analog_Inputs_Real_1_Max[0]
100.0
Analog Inputs 1 Eng. Units Minimum [1x EU]
Analog_Inputs_Real_1_Min[0]
0.0
FCV-1-2 Raw Value [1x mA]
Local:8:I.Ch0Data
3.9763923
Local:8:C.Ch0Config.HighEngineering
20.0
Local:8:C.Ch0Config.LowEngineering
4.0
1
0.0
SEL_FCVxx010200_SetToMinOnFault
SEL
Select
In1
In2
SelectorIn
Out
0.0
FCV-1-2 Consolidation Facility Flow Valve Position Feedback Scaled Value [1x %]
Analog_Inputs_Real_1[0]
LIM_FCVxx010200_OutOfRange
LIM
Limit Test (CIRC)
LowLimit
Test
HighLimit
Dest
20.5
2.0
0
BOR_FCVxx010200_Faults
BOR
Boolean Or
In1
In2
In3
In4
Out
Local:8:I.Ch0Underrange
Local:8:I.Ch0Overrange
Local:8:I.Ch0Fault
FCV-1-2 Valve Pos. Feedback Fault (Cons. Facility Valve)
FCVxx010200_PosFdbk_Fault

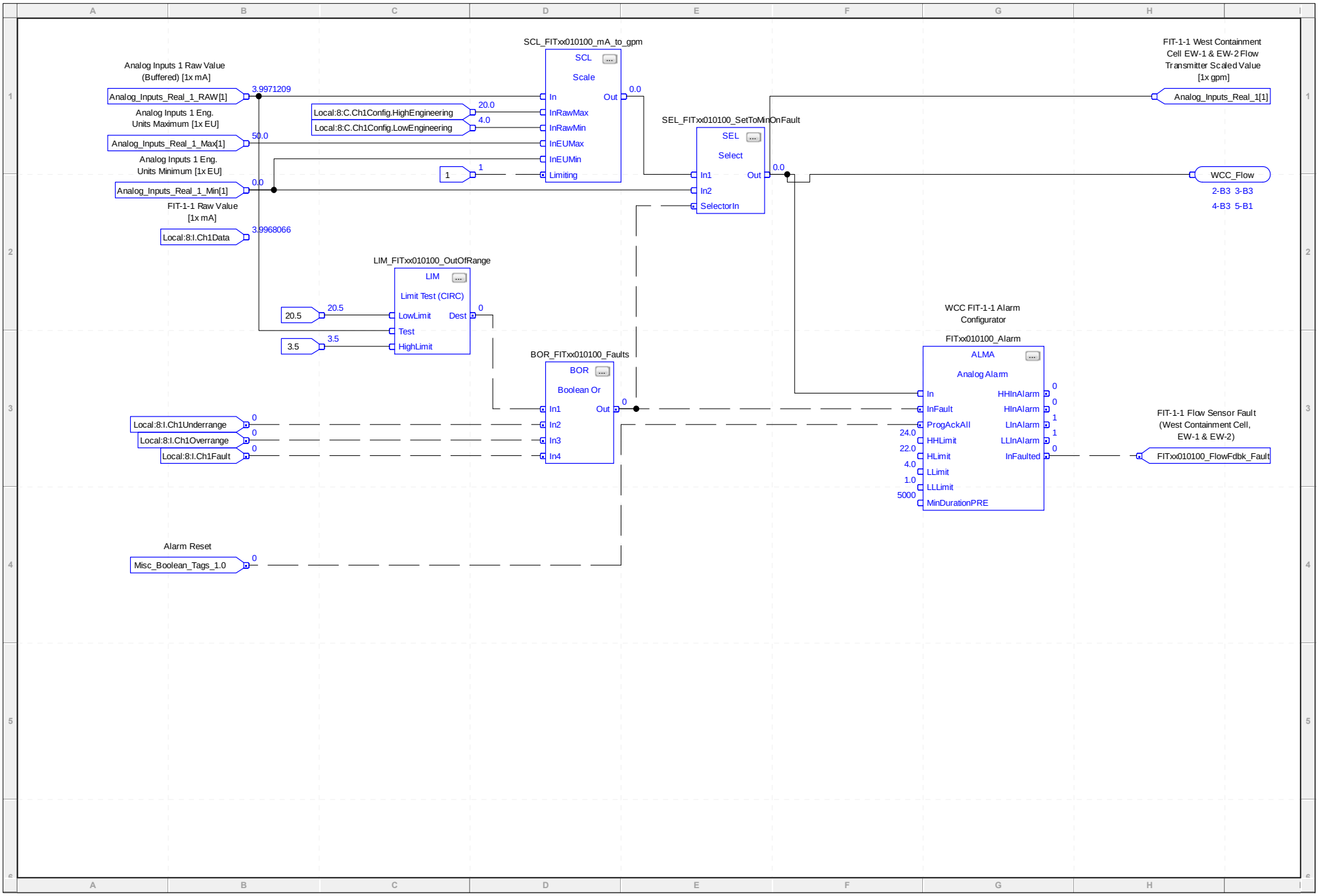
Analog Inputs 1 Raw Value (Buffered) [1x mA]
Analog_Inputs_Real_1_RAW[1]
3.9971209
Analog Inputs 1 Eng. Units Maximum [1x EU]
Analog_Inputs_Real_1_Max[1]
50.0
Analog Inputs 1 Eng. Units Minimum [1x EU]
Analog_Inputs_Real_1_Min[1]
0.0
FIT-1-1 Raw Value [1x mA]
Local:8:I.Ch1Data
3.9968066
SCL_FITxx010100_mA_to_gpm
SCL
Scale
In
Out
0.0
Local:8:C.Ch1Config.HighEngineering
20.0
Local:8:C.Ch1Config.LowEngineering
4.0
InRawMax
InRawMin
InEUMax
InEUMin
1
Limiting
SEL_FITxx010100_SetToMinOnFault
SEL
Select
In1
In2
SelectorIn
FIT-1-1 West Containment Cell EW-1 & EW-2 Flow Transmitter Scaled Value [1x gpm]
Analog_Inputs_Real_1[1]
WCC_Flow
2-B3 3-B3
4-B3 5-B1
LIM_FITxx010100_OutOfRange
LIM
Limit Test (CIRC)
20.5
LowLimit
Test
HighLimit
Dest
3.5
BOR_FITxx010100_Faults
BOR
Boolean Or
In1
In2
In3
In4
Local:8:I.Ch1Underrange
Local:8:I.Ch1Overrange
Local:8:I.Ch1Fault
WCC FIT-1-1 Alarm Configurator
FITxx010100_Alarm
ALMA
Analog Alarm
In
InFault
ProgAckAll
HHLimit
HLimit
LLimit
LLLimit
MinDurationPRE
24.0
22.0
4.0
1.0
5000
HHInAlarm
HInAlarm
LInAlarm
LLInAlarm
InFaulted
FIT-1-1 Flow Sensor Fault (West Containment Cell, EW-1 & EW-2)
FITxx010100_FlowFdbk_Fault
Alarm Reset
Misc_Boolean_Tags_1.0

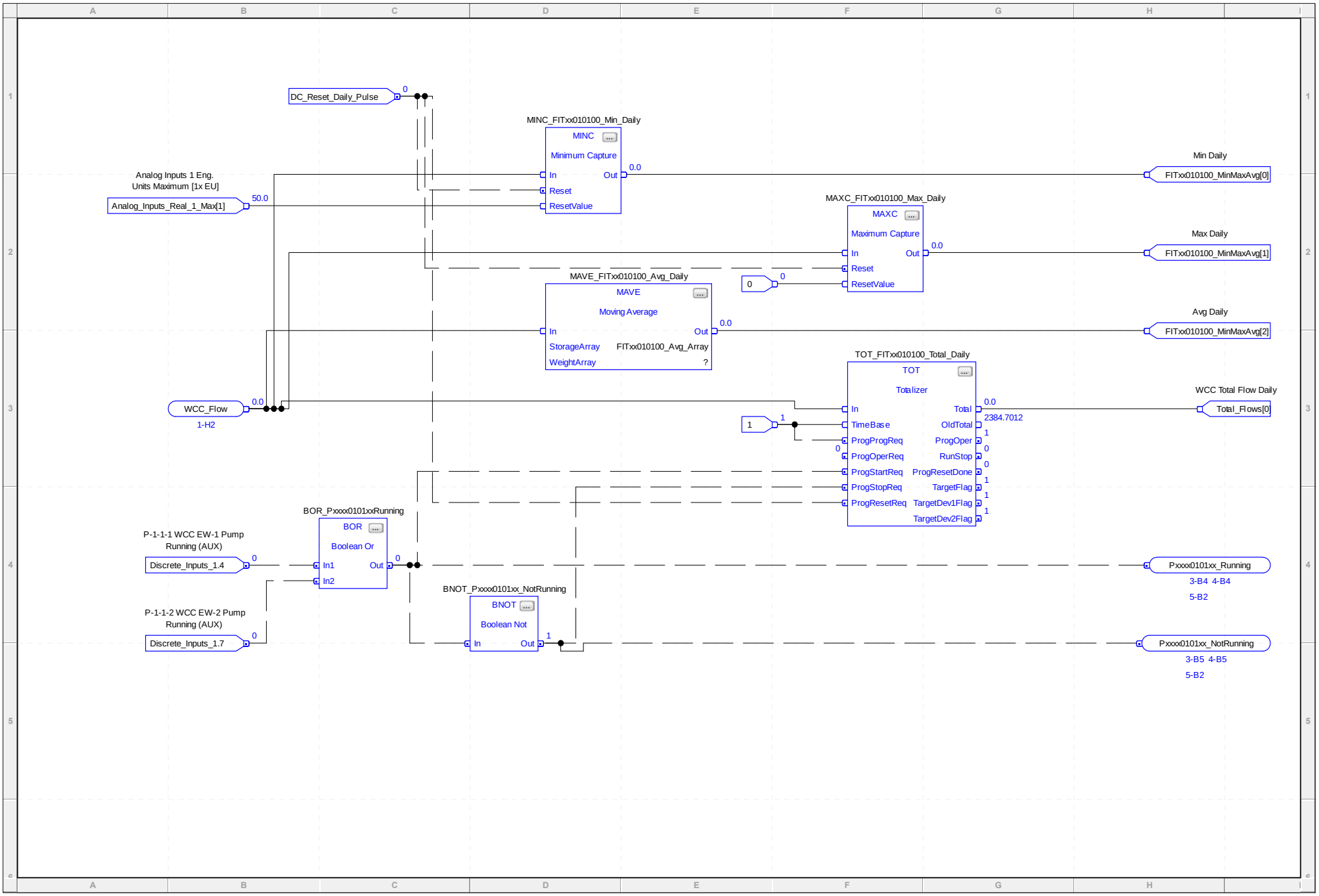
DC_Reset_Daily_Pulse
0
MINC_FITxx010100_Min_Daily
MINC
Minimum Capture
In
Reset
ResetValue
Out
0.0
Min Daily
FITxx010100_MinMaxAvg[0]
Analog Inputs 1 Eng.
Units Maximum [1x EU]
Analog_Inputs_Real_1_Max[1]
50.0
MAXC_FITxx010100_Max_Daily
MAXC
Maximum Capture
Max Daily
FITxx010100_MinMaxAvg[1]
MAVE_FITxx010100_Avg_Daily
MAVE
Moving Average
StorageArray
FITxx010100_Avg_Array
WeightArray
?
Avg Daily
FITxx010100_MinMaxAvg[2]
TOT_FITxx010100_Total_Daily
TOT
Totalizer
TimeBase
ProgProgReq
ProgOperReq
ProgStartReq
ProgStopReq
ProgResetReq
Total
OldTotal
ProgOper
RunStop
ProgResetDone
TargetFlag
TargetDev1Flag
TargetDev2Flag
2384.7012
WCC Total Flow Daily
Total_Flows[0]
WCC_Flow
1-H2
BOR_Pxxxx0101xxRunning
BOR
Boolean Or
In1
In2
P-1-1-1 WCC EW-1 Pump
Running (AUX)
Discrete_Inputs_1.4
P-1-1-2 WCC EW-2 Pump
Running (AUX)
Discrete_Inputs_1.7
BNOT_Pxxxx0101xx_NotRunning
BNOT
Boolean Not
Pxxxx0101xx_Running
3-B4 4-B4
5-B2
Pxxxx0101xx_NotRunning
3-B5 4-B5
5-B2

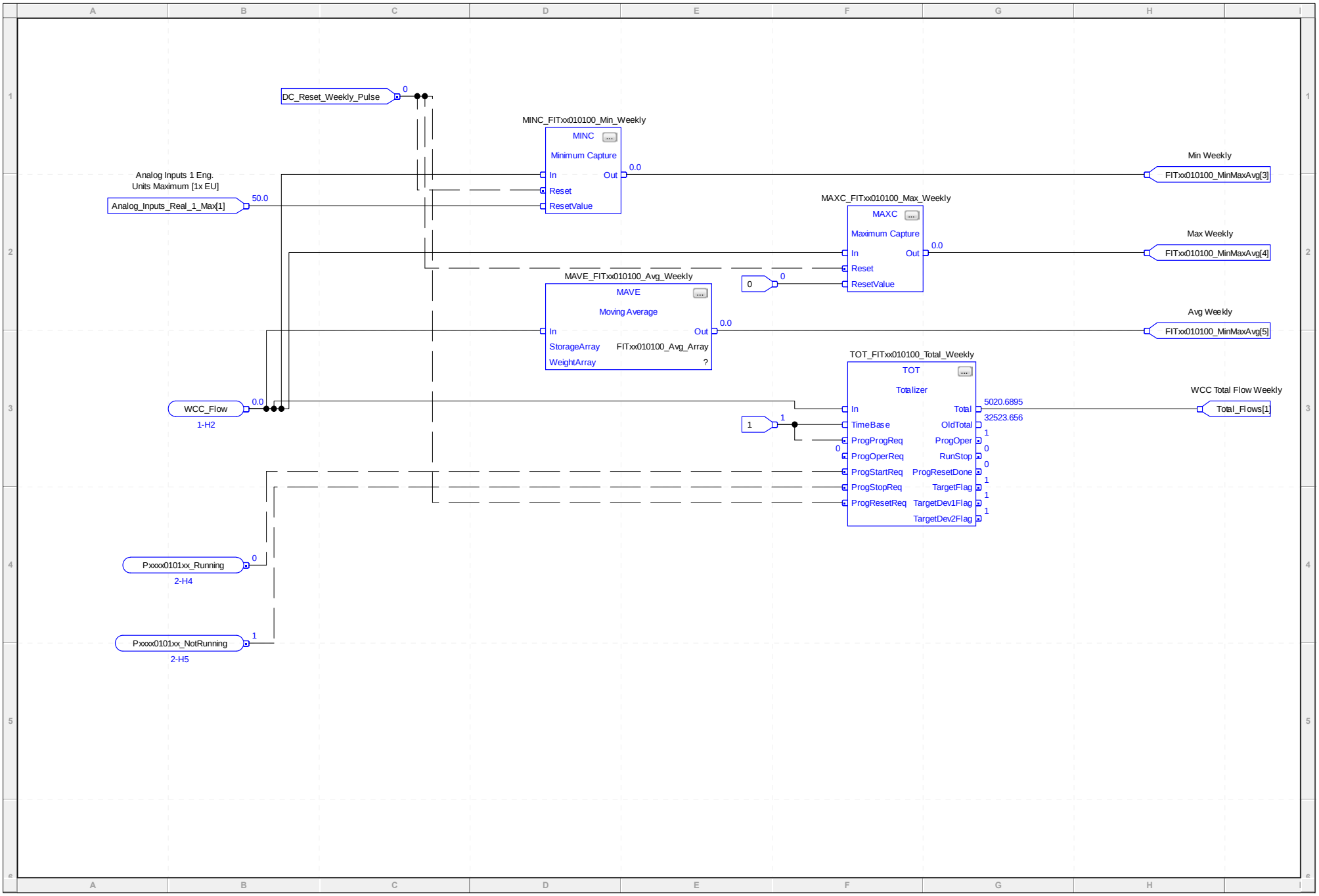
DC_Reset_Weekly_Pulse
0
MINC_FITxx010100_Min_Weekly
MINC
Minimum Capture
In
Reset
ResetValue
Out
0.0
Analog Inputs 1 Eng.
Units Maximum [1x EU]
Analog_Inputs_Real_1_Max[1]
50.0
Min Weekly
FITxx010100_MinMaxAvg[3]
MAXC_FITxx010100_Max_Weekly
MAXC
Maximum Capture
In
Reset
ResetValue
Out
0.0
0
Max Weekly
FITxx010100_MinMaxAvg[4]
MAVE_FITxx010100_Avg_Weekly
MAVE
Moving Average
In
StorageArray
WeightArray
Out
FITxx010100_Avg_Array
?
0.0
Avg Weekly
FITxx010100_MinMaxAvg[5]
TOT_FITxx010100_Total_Weekly
TOT
Totalizer
In
TimeBase
ProgProgReq
ProgOperReq
ProgStartReq
ProgStopReq
ProgResetReq
Total
OldTotal
ProgOper
RunStop
ProgResetDone
TargetFlag
TargetDev1Flag
TargetDev2Flag
5020.6895
32523.656
1
0
WCC Total Flow Weekly
Total_Flows[1]
WCC_Flow
1-H2
0.0
Pxxxx0101xx_Running
2-H4
Pxxxx0101xx_NotRunning
2-H5

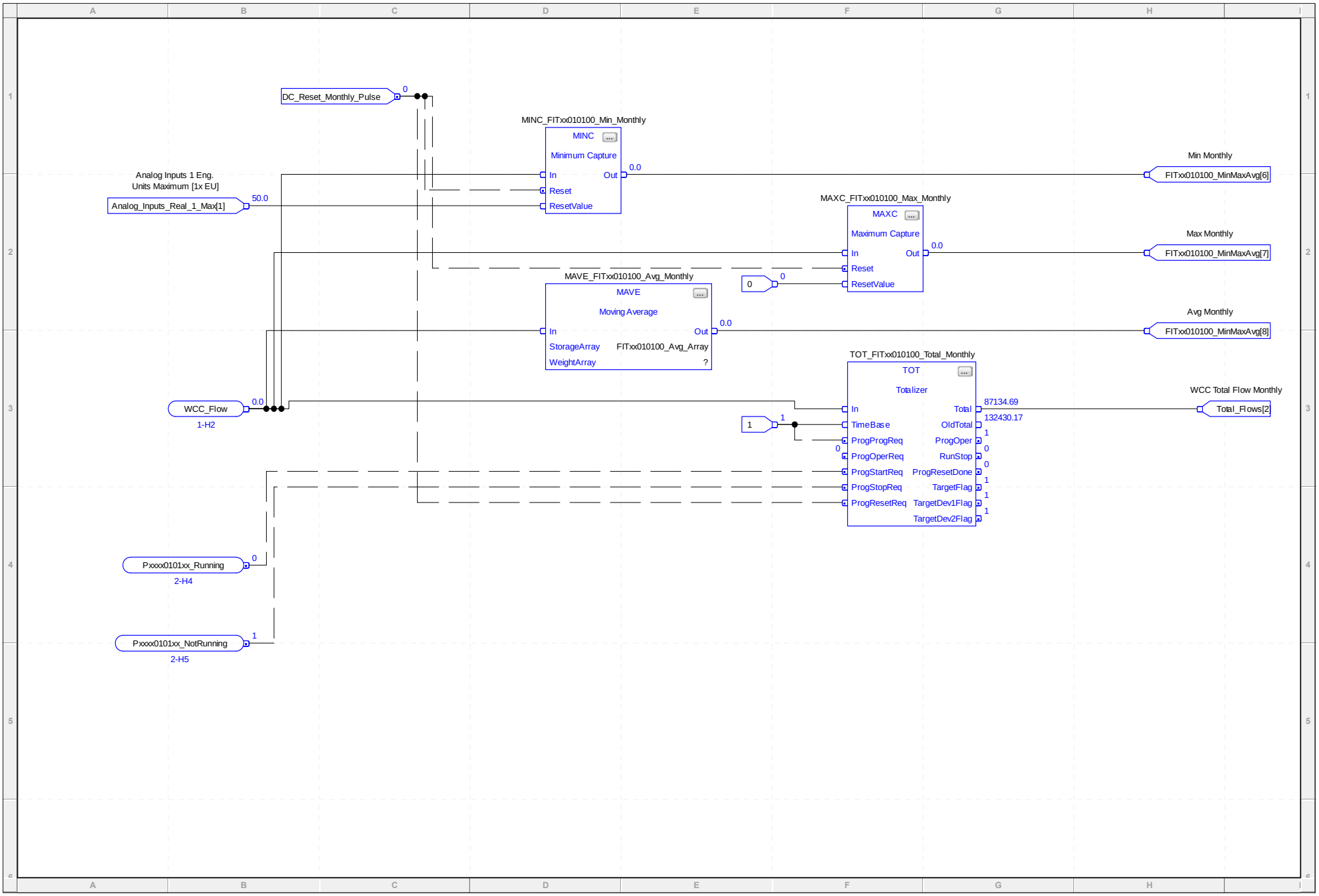
DC_Reset_Monthly_Pulse
0
MINC_FITxx010100_Min_Monthly
MINC
Minimum Capture
In
Reset
ResetValue
Out
0.0
Min Monthly
FITxx010100_MinMaxAvg[6]
Analog Inputs 1 Eng.
Units Maximum [1x EU]
Analog_Inputs_Real_1_Max[1]
50.0
MAXC_FITxx010100_Max_Monthly
MAXC
Maximum Capture
In
Reset
ResetValue
Out
0.0
Max Monthly
FITxx010100_MinMaxAvg[7]
0
MAVE_FITxx010100_Avg_Monthly
MAVE
Moving Average
In
StorageArray
WeightArray
Out
FITxx010100_Avg_Array
?
0.0
Avg Monthly
FITxx010100_MinMaxAvg[8]
TOT_FITxx010100_Total_Monthly
TOT
Totalizer
In
TimeBase
ProgProgReq
ProgOperReq
ProgStartReq
ProgStopReq
ProgResetReq
Total
OldTotal
ProgOper
RunStop
ProgResetDone
TargetFlag
TargetDev1Flag
TargetDev2Flag
87134.69
132430.17
WCC Total Flow Monthly
Total_Flows[2]
WCC_Flow
1-H2
1
Pxxxx0101xx_Running
2-H4
Pxxxx0101xx_NotRunning
2-H5

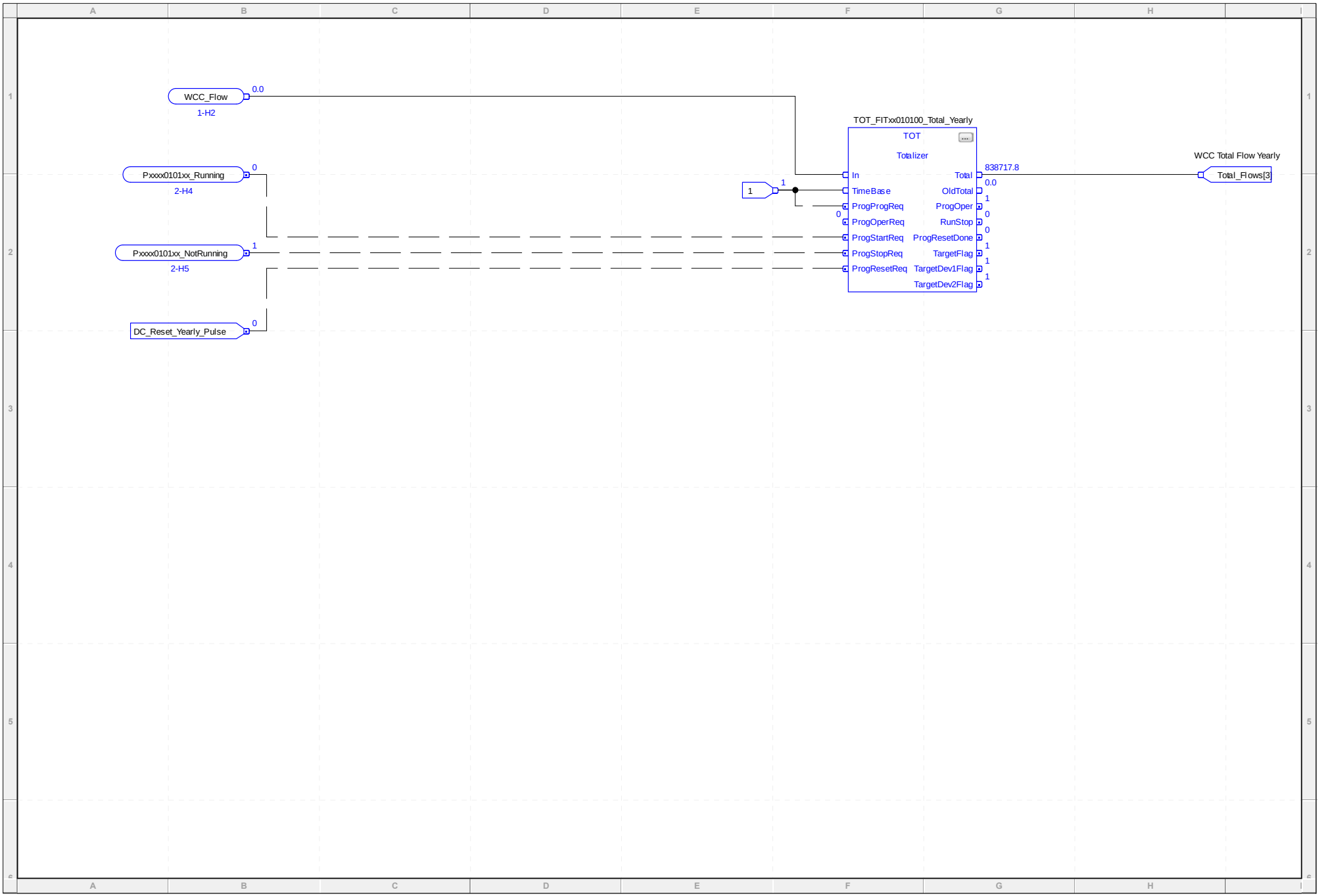
WCC_Flow
0.0
1-H2
Pxxxx0101xx_Running
0
2-H4
Pxxxx0101xx_NotRunning
1
2-H5
DC_Reset_Yearly_Pulse
0
1
1
TOT_FITxx010100_Total_Yearly
TOT
Totalizer
In
TimeBase
ProgProgReq
0
ProgOperReq
ProgStartReq
ProgStopReq
ProgResetReq
Total
OldTotal
ProgOper
RunStop
ProgResetDone
TargetFlag
TargetDev1Flag
TargetDev2Flag
838717.8
0.0
1
0
0
1
1
1
WCC Total Flow Yearly
Total_Flows[3]

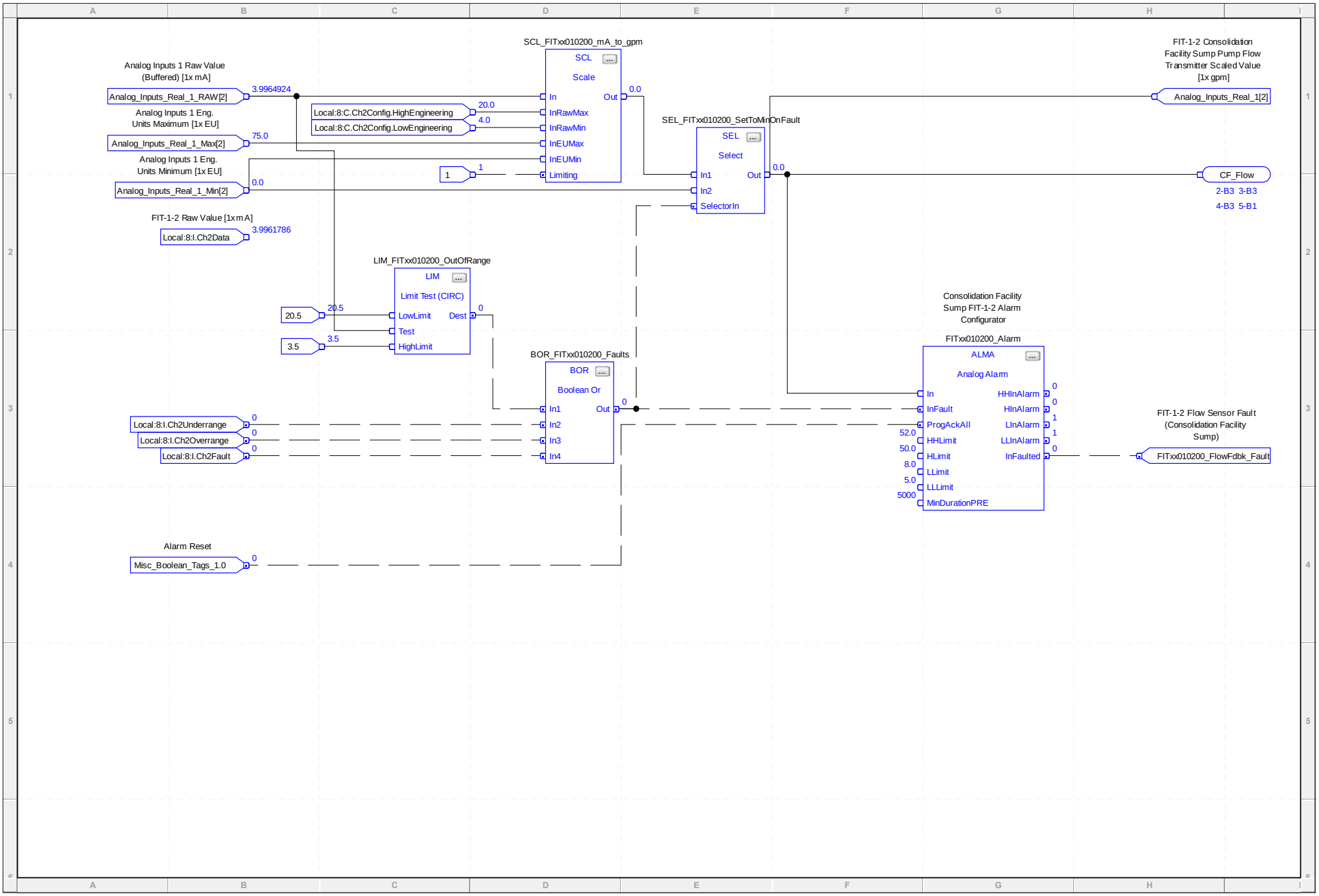
Analog Inputs 1 Raw Value (Buffered) [1x mA]
Analog_Inputs_Real_1_RAW[2]
3.9964924
Analog Inputs 1 Eng. Units Maximum [1x EU]
Analog_Inputs_Real_1_Max[2]
75.0
Analog Inputs 1 Eng. Units Minimum [1x EU]
Analog_Inputs_Real_1_Min[2]
0.0
FIT-1-2 Raw Value [1x mA]
Local:8:I.Ch2Data
3.9961786
SCL_FITxx010200_mA_to_gpm
SCL
Scale
Local:8:C.Ch2Config.HighEngineering
20.0
Local:8:C.Ch2Config.LowEngineering
4.0
1
In
InRawMax
InRawMin
InEUMax
InEUMin
Limiting
Out
0.0
SEL_FITxx010200_SetToMinOnFault
SEL
Select
In1
In2
SelectorIn
Out
0.0
FIT-1-2 Consolidation Facility Sump Pump Flow Transmitter Scaled Value [1x gpm]
Analog_Inputs_Real_1[2]
CF_Flow
2-B3 3-B3
4-B3 5-B1
LIM_FITxx010200_OutOfRange
LIM
Limit Test (CIRC)
20.5
LowLimit
Test
HighLimit
Dest
0
3.5
BOR_FITxx010200_Faults
BOR
Boolean Or
In1
In2
In3
In4
Out
Local:8:I.Ch2Underrange
Local:8:I.Ch2Overrange
Local:8:I.Ch2Fault
Consolidation Facility Sump FIT-1-2 Alarm Configurator
FITxx010200_Alarm
ALMA
Analog Alarm
In
InFault
ProgAckAll
HHLimit
HLimit
LLimit
LLLimit
MinDurationPRE
52.0
50.0
8.0
5.0
5000
HHInAlarm
HInAlarm
LInAlarm
LLInAlarm
InFaulted
FIT-1-2 Flow Sensor Fault (Consolidation Facility Sump)
FITxx010200_FlowFdbk_Fault
Alarm Reset
Misc_Boolean_Tags_1.0

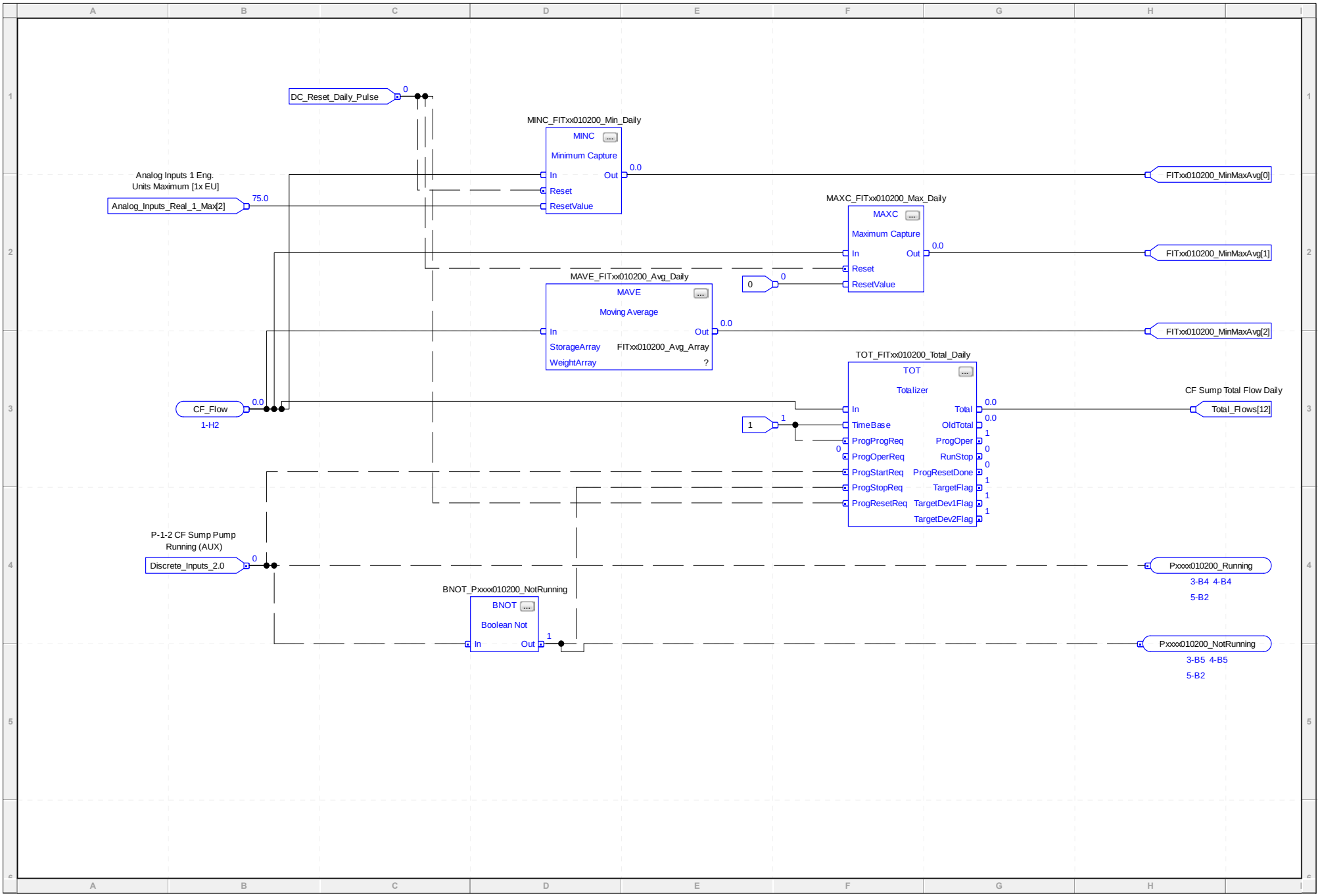
DC_Reset_Daily_Pulse
0
MINC_FITxx010200_Min_Daily
MINC
Minimum Capture
In
Reset
ResetValue
Out
0.0
Analog Inputs 1 Eng.
Units Maximum [1x EU]
Analog_Inputs_Real_1_Max[2]
75.0
FITxx010200_MinMaxAvg[0]
MAXC_FITxx010200_Max_Daily
MAXC
Maximum Capture
FITxx010200_MinMaxAvg[1]
MAVE_FITxx010200_Avg_Daily
MAVE
Moving Average
StorageArray
FITxx010200_Avg_Array
WeightArray
?
FITxx010200_MinMaxAvg[2]
TOT_FITxx010200_Total_Daily
TOT
Totalizer
TimeBase
ProgProgReq
ProgOperReq
ProgStartReq
ProgStopReq
ProgResetReq
Total
OldTotal
ProgOper
RunStop
ProgResetDone
TargetFlag
TargetDev1Flag
TargetDev2Flag
CF Sump Total Flow Daily
Total_Flows[12]
CF_Flow
1-H2
P-1-2 CF Sump Pump
Running (AUX)
Discrete_Inputs_2.0
Pxxxx010200_Running
3-B4 4-B4
5-B2
BNOT_Pxxxx010200_NotRunning
BNOT
Boolean Not
Pxxxx010200_NotRunning
3-B5 4-B5
5-B2

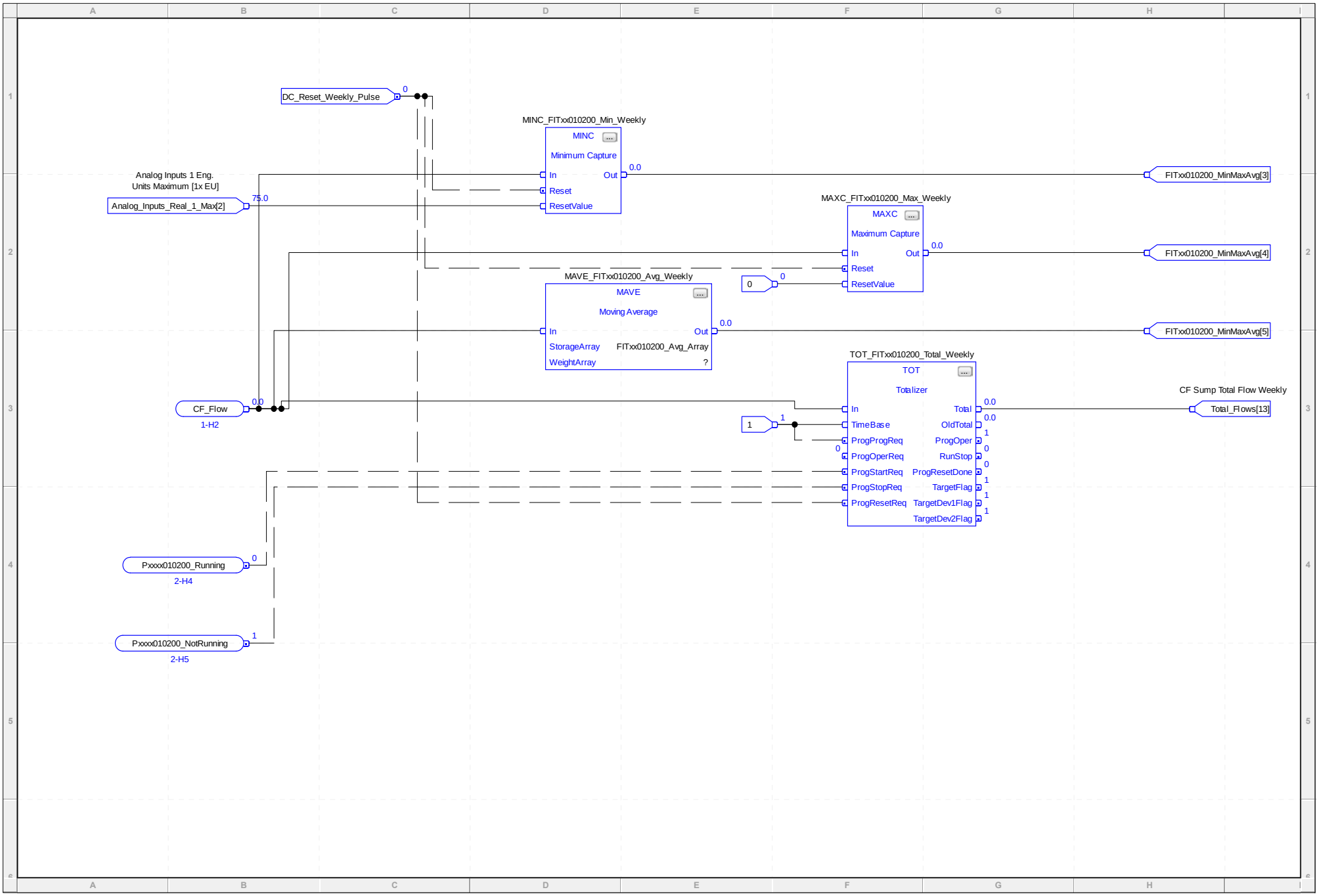
DC_Reset_Weekly_Pulse
0
MINC_FITxx010200_Min_Weekly
MINC
Minimum Capture
In
Reset
ResetValue
Out
0.0
Analog Inputs 1 Eng.
Units Maximum [1x EU]
Analog_Inputs_Real_1_Max[2]
75.0
FITxx010200_MinMaxAvg[3]
MAXC_FITxx010200_Max_Weekly
MAXC
Maximum Capture
In
Reset
ResetValue
Out
0.0
0
FITxx010200_MinMaxAvg[4]
MAVE_FITxx010200_Avg_Weekly
MAVE
Moving Average
In
StorageArray
WeightArray
Out
FITxx010200_Avg_Array
?
0.0
FITxx010200_MinMaxAvg[5]
TOT_FITxx010200_Total_Weekly
TOT
Totalizer
In
TimeBase
ProgProgReq
ProgOperReq
ProgStartReq
ProgStopReq
ProgResetReq
Total
OldTotal
ProgOper
RunStop
ProgResetDone
TargetFlag
TargetDev1Flag
TargetDev2Flag
1
CF Sump Total Flow Weekly
Total_Flows[13]
CF_Flow
1-H2
Pxxxx010200_Running
2-H4
Pxxxx010200_NotRunning
2-H5

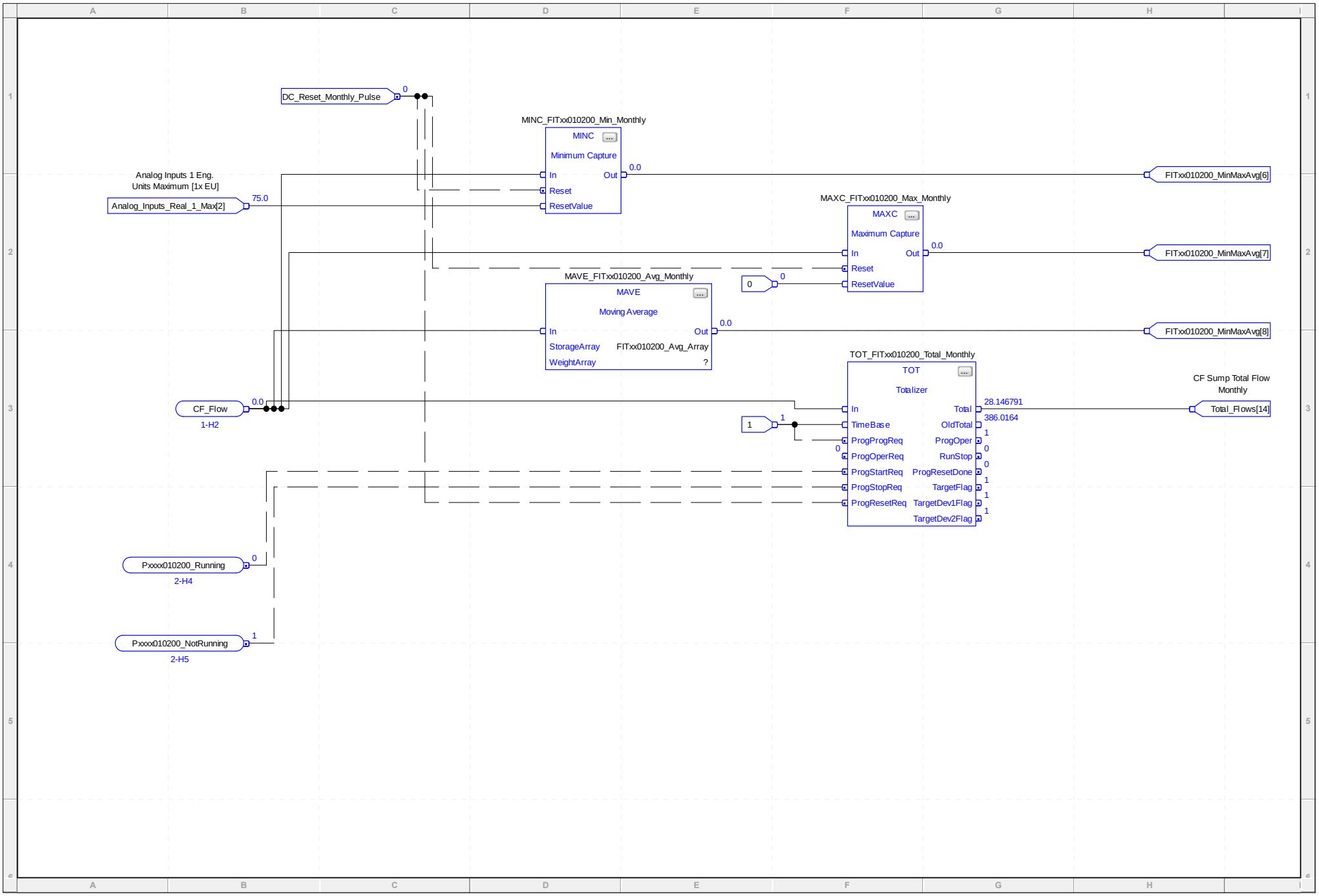
DC_Reset_Monthly_Pulse
0
MINC_FITxx010200_Min_Monthly
MINC
Minimum Capture
In
Reset
ResetValue
Out
0.0
Analog Inputs 1 Eng.
Units Maximum [1x EU]
Analog_Inputs_Real_1_Max[2]
75.0
FITxx010200_MinMaxAvg[6]
MAXC_FITxx010200_Max_Monthly
MAXC
Maximum Capture
In
Reset
ResetValue
Out
0.0
0
FITxx010200_MinMaxAvg[7]
MAVE_FITxx010200_Avg_Monthly
MAVE
Moving Average
In
StorageArray
WeightArray
Out
FITxx010200_Avg_Array
?
0.0
FITxx010200_MinMaxAvg[8]
TOT_FITxx010200_Total_Monthly
TOT
Totalizer
In
TimeBase
ProgProgReq
ProgOperReq
ProgStartReq
ProgStopReq
ProgResetReq
Total
OldTotal
ProgOper
RunStop
ProgResetDone
TargetFlag
TargetDev1Flag
TargetDev2Flag
28.146791
386.0164
1
0
CF Sump Total Flow
Monthly
Total_Flows[14]
CF_Flow
1-H2
0.0
Pxxxx010200_Running
2-H4
Pxxxx010200_NotRunning
2-H5

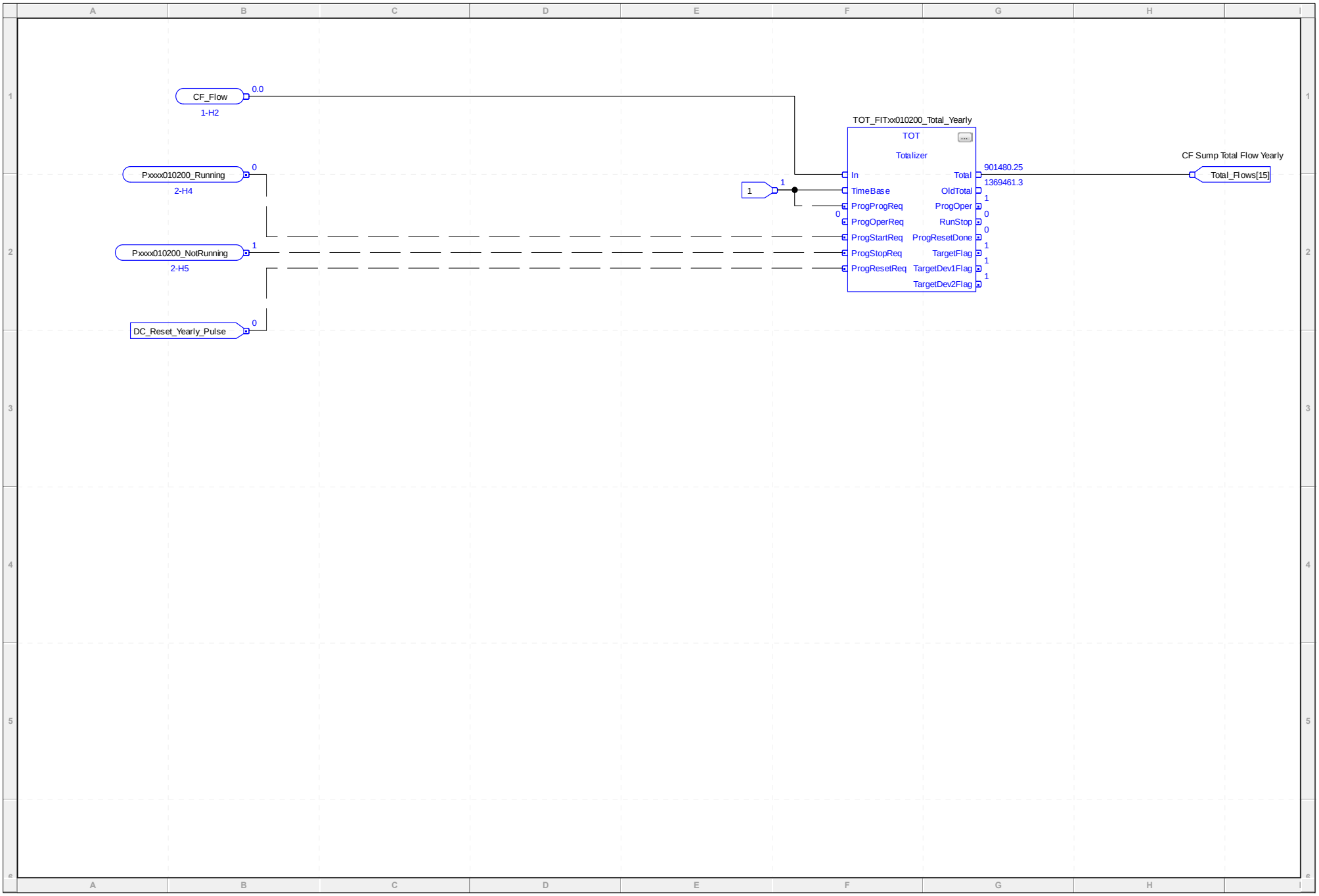
CF_Flow
0.0
1-H2
Pxxxx010200_Running
0
2-H4
Pxxxx010200_NotRunning
1
2-H5
DC_Reset_Yearly_Pulse
0
1
1
TOT_FITxx010200_Total_Yearly
TOT
Totalizer
In
TimeBase
ProgProgReq
0
ProgOperReq
ProgStartReq
ProgStopReq
ProgResetReq
Total
OldTotal
ProgOper
RunStop
ProgResetDone
TargetFlag
TargetDev1Flag
TargetDev2Flag
901480.25
1369461.3
1
0
0
1
1
1
CF Sump Total Flow Yearly
Total_Flows[15]

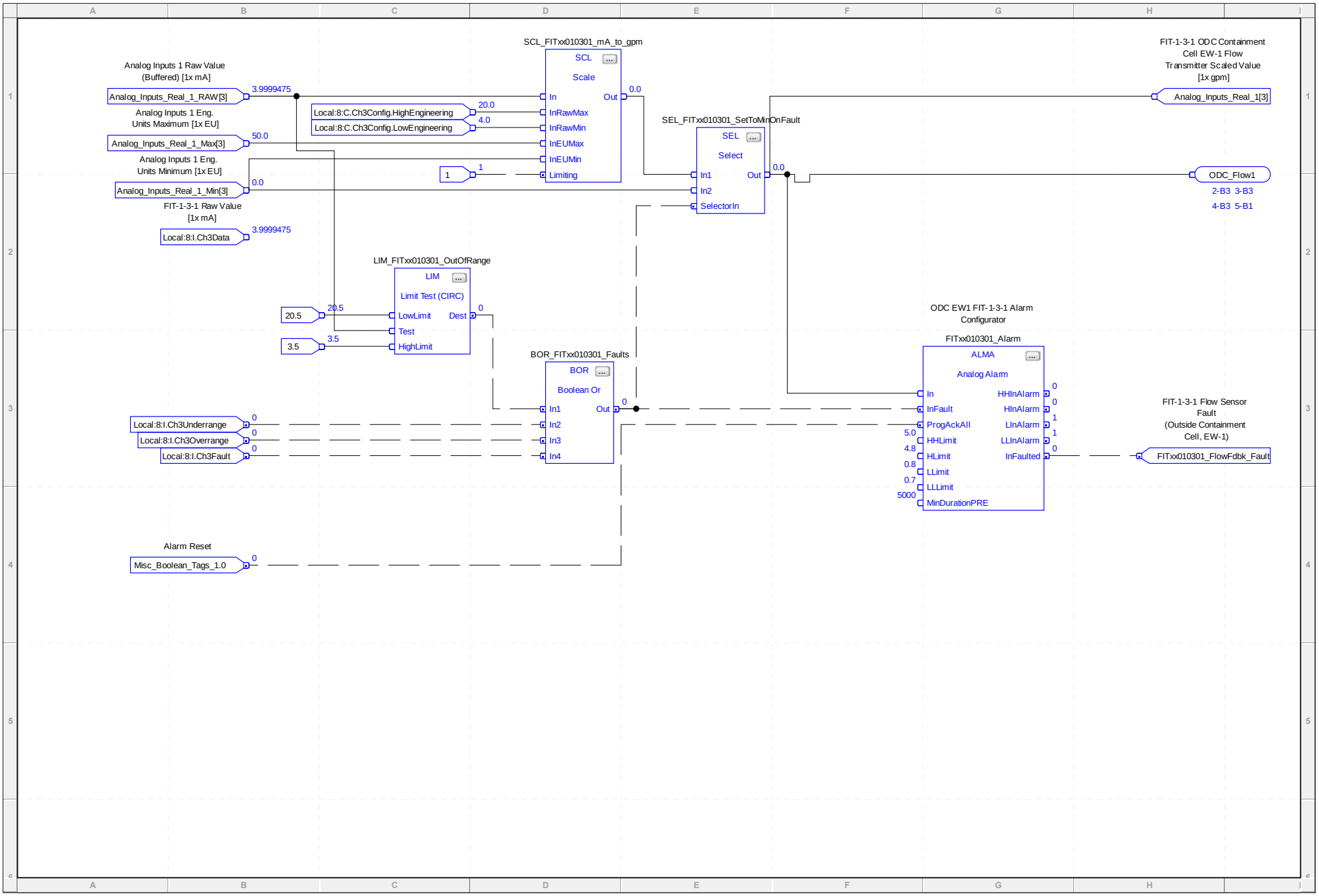
SCL_FITxx010301_mA_to_gpm
SCL
Scale
In
Out
InRawMax
InRawMin
InEUMax
InEUMin
Limiting
Analog Inputs 1 Raw Value (Buffered) [1x mA]
Analog_Inputs_Real_1_RAW[3]
3.9999475
Analog Inputs 1 Eng. Units Maximum [1x EU]
Analog_Inputs_Real_1_Max[3]
50.0
Analog Inputs 1 Eng. Units Minimum [1x EU]
Analog_Inputs_Real_1_Min[3]
0.0
Local:8:C.Ch3Config.HighEngineering
20.0
Local:8:C.Ch3Config.LowEngineering
4.0
1
0.0
SEL_FITxx010301_SetToMinOnFault
SEL
Select
In1
In2
SelectorIn
Out
FIT-1-3-1 ODC Containment Cell EW-1 Flow Transmitter Scaled Value [1x gpm]
Analog_Inputs_Real_1[3]
ODC_Flow1
2-B3 3-B3
4-B3 5-B1
FIT-1-3-1 Raw Value [1x mA]
Local:8:I.Ch3Data
3.9999475
LIM_FITxx010301_OutOfRange
LIM
Limit Test (CIRC)
LowLimit
Test
HighLimit
Dest
20.5
3.5
0
BOR_FITxx010301_Faults
BOR
Boolean Or
In1
In2
In3
In4
Out
Local:8:I.Ch3Underrange
Local:8:I.Ch3Overrange
Local:8:I.Ch3Fault
ODC EW1 FIT-1-3-1 Alarm Configurator
FITxx010301_Alarm
ALMA
Analog Alarm
In
InFault
ProgAckAll
HHLimit
HLimit
LLimit
LLLimit
MinDurationPRE
HHInAlarm
HInAlarm
LInAlarm
LLInAlarm
InFaulted
5.0
4.8
0.8
0.7
5000
FIT-1-3-1 Flow Sensor Fault (Outside Containment Cell, EW-1)
FITxx010301_FlowFdbk_Fault
Alarm Reset
Misc_Boolean_Tags_1.0

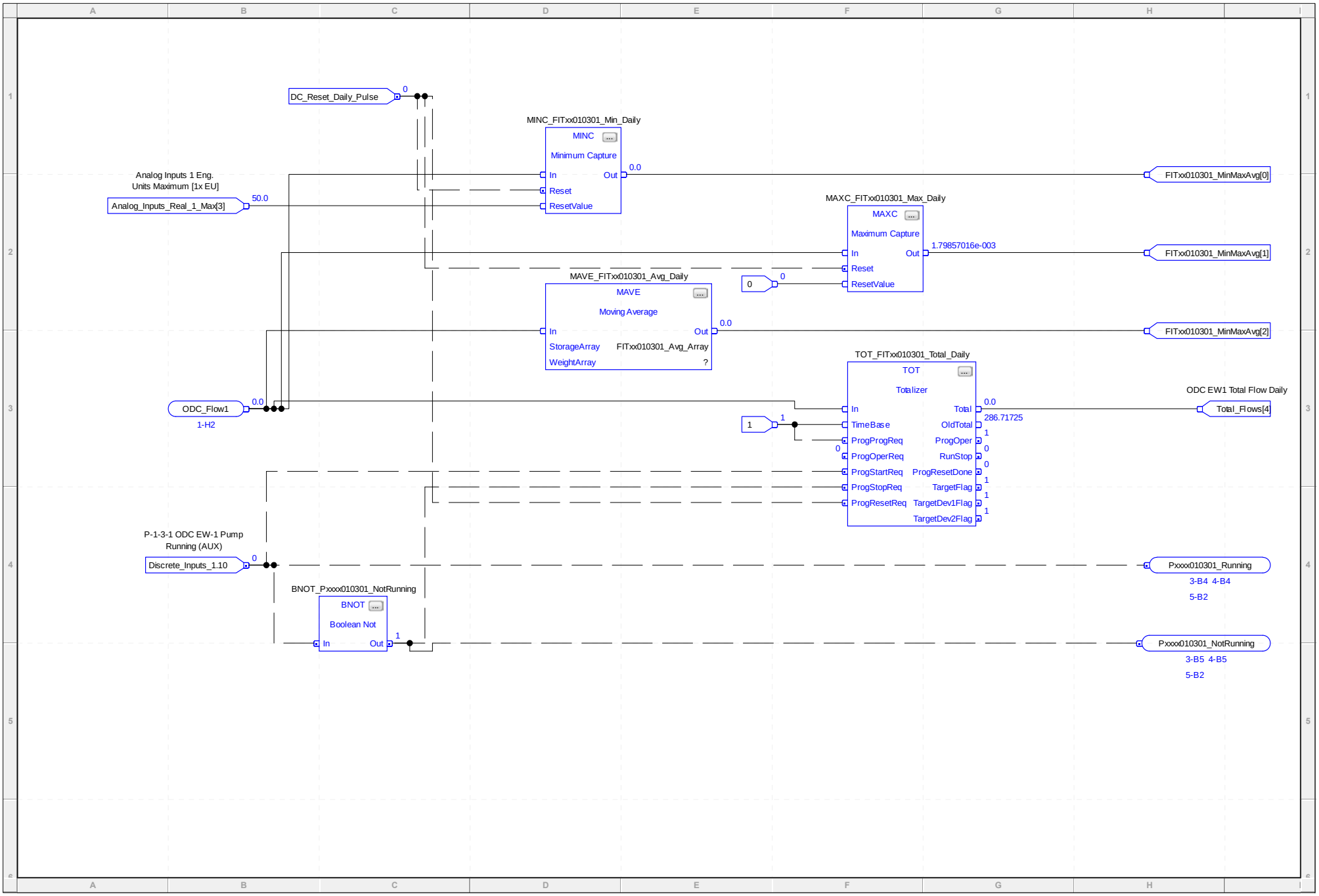
DC_Reset_Daily_Pulse
0
MINC_FITxx010301_Min_Daily
MINC
Minimum Capture
In
Out
0.0
Reset
ResetValue
Analog Inputs 1 Eng.
Units Maximum [1x EU]
Analog_Inputs_Real_1_Max[3]
50.0
FITxx010301_MinMaxAvg[0]
MAXC_FITxx010301_Max_Daily
MAXC
Maximum Capture
1.79857016e-003
FITxx010301_MinMaxAvg[1]
MAVE_FITxx010301_Avg_Daily
MAVE
Moving Average
StorageArray
FITxx010301_Avg_Array
WeightArray
?
FITxx010301_MinMaxAvg[2]
TOT_FITxx010301_Total_Daily
TOT
Totalizer
Total
OldTotal
286.71725
TimeBase
ProgProgReq
ProgOperReq
ProgOper
RunStop
ProgStartReq
ProgResetDone
ProgStopReq
TargetFlag
ProgResetReq
TargetDev1Flag
TargetDev2Flag
ODC EW1 Total Flow Daily
Total_Flows[4]
ODC_Flow1
1-H2
P-1-3-1 ODC EW-1 Pump
Running (AUX)
Discrete_Inputs_1.10
Pxxxx010301_Running
3-B4 4-B4
5-B2
BNOT_Pxxxx010301_NotRunning
BNOT
Boolean Not
Pxxxx010301_NotRunning
3-B5 4-B5
5-B2

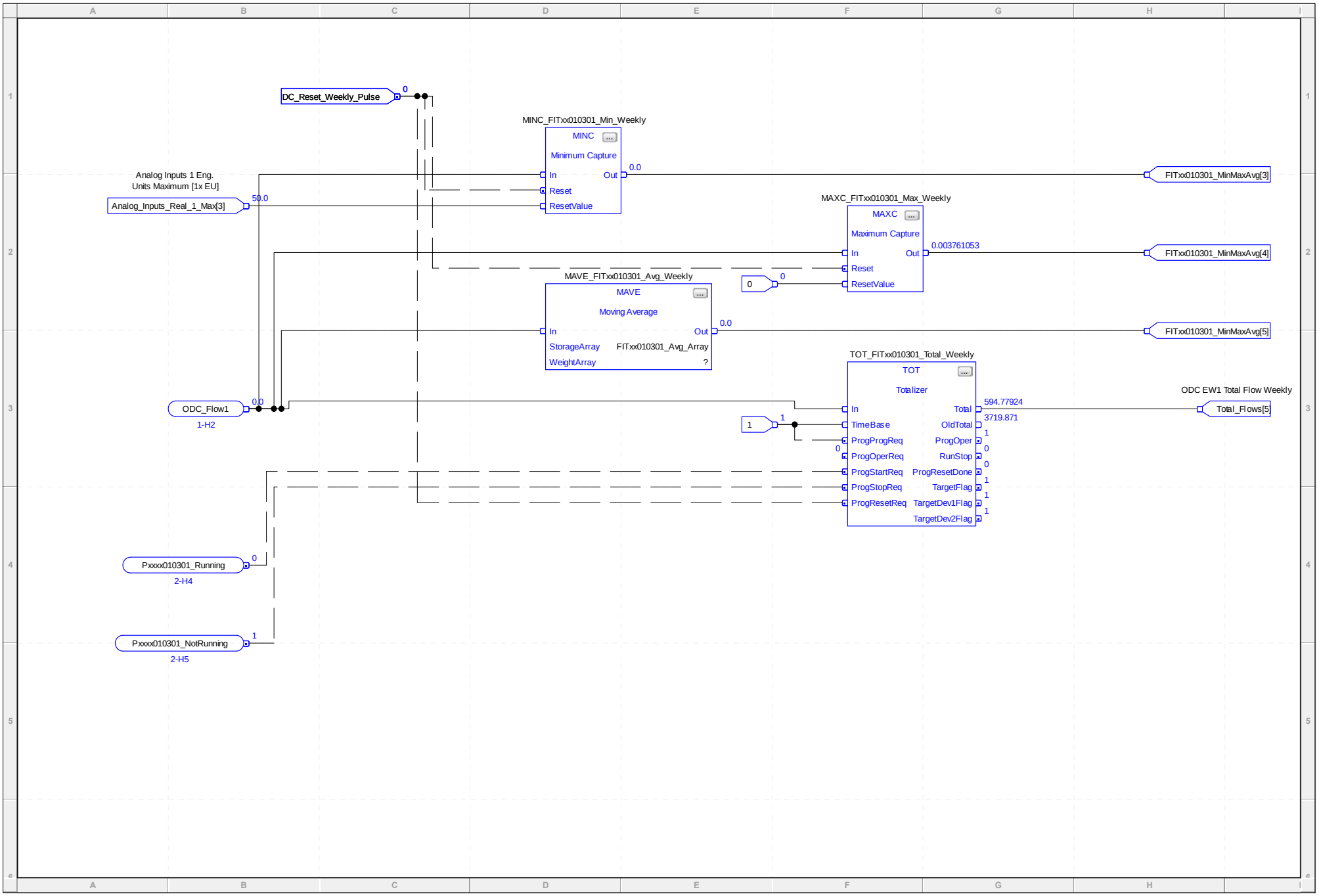
DC_Reset_Weekly_Pulse
0
MINC_FITxx010301_Min_Weekly
MINC
Minimum Capture
In
Reset
ResetValue
Out
0.0
Analog Inputs 1 Eng.
Units Maximum [1x EU]
Analog_Inputs_Real_1_Max[3]
50.0
FITxx010301_MinMaxAvg[3]
MAXC_FITxx010301_Max_Weekly
MAXC
Maximum Capture
0.003761053
FITxx010301_MinMaxAvg[4]
MAVE_FITxx010301_Avg_Weekly
MAVE
Moving Average
StorageArray
FITxx010301_Avg_Array
WeightArray
?
FITxx010301_MinMaxAvg[5]
TOT_FITxx010301_Total_Weekly
TOT
Totalizer
TimeBase
ProgProgReq
ProgOperReq
ProgStartReq
ProgStopReq
ProgResetReq
Total
OldTotal
ProgOper
RunStop
ProgResetDone
TargetFlag
TargetDev1Flag
TargetDev2Flag
594.77924
3719.871
ODC EW1 Total Flow Weekly
Total_Flows[5]
ODC_Flow1
1-H2
Pxxxx010301_Running
2-H4
Pxxxx010301_NotRunning
2-H5

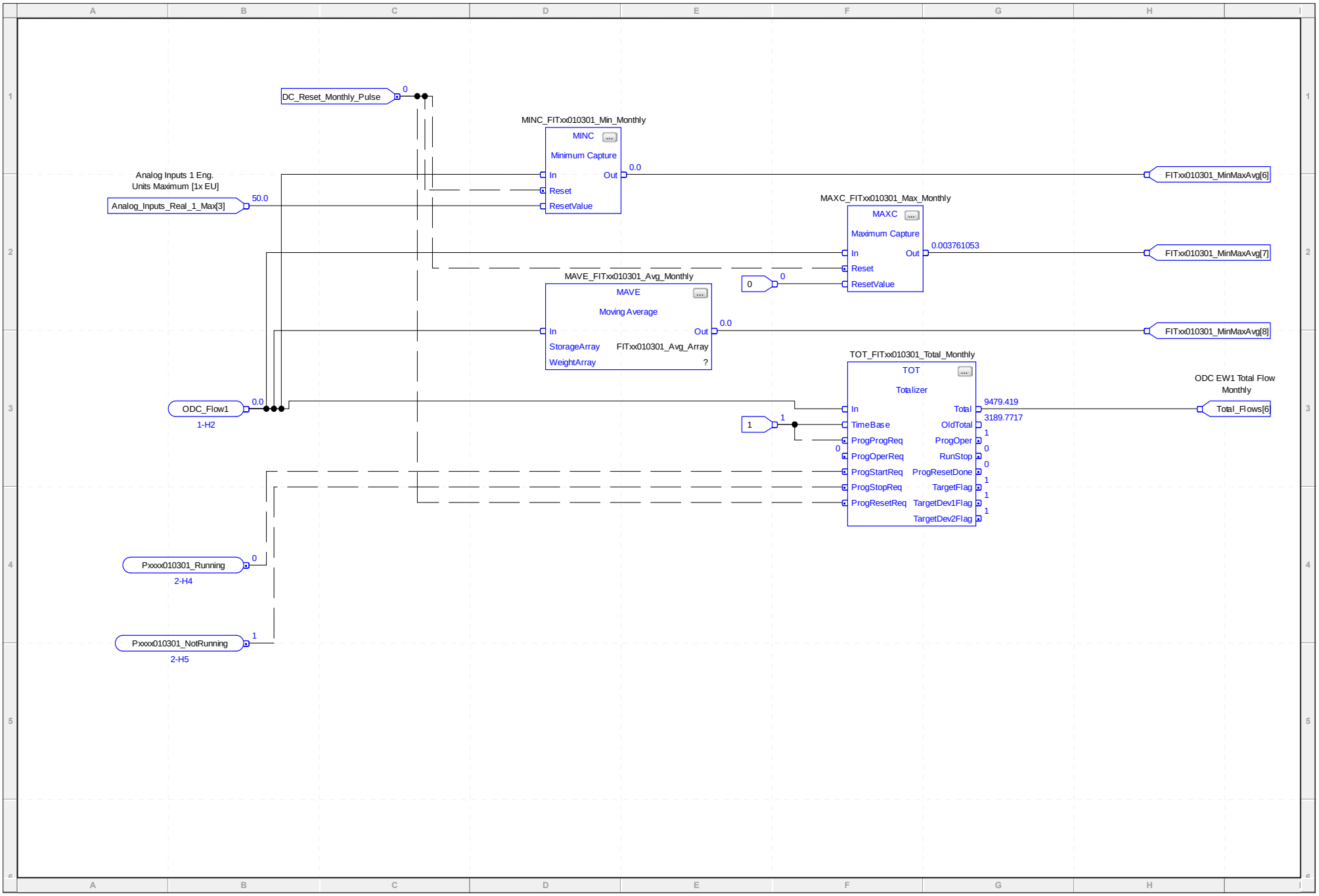
DC_Reset_Monthly_Pulse
0
MINC_FITxx010301_Min_Monthly
MINC
Minimum Capture
In
Reset
ResetValue
Out
0.0
Analog Inputs 1 Eng.
Units Maximum [1x EU]
Analog_Inputs_Real_1_Max[3]
50.0
FITxx010301_MinMaxAvg[6]
MAXC_FITxx010301_Max_Monthly
MAXC
Maximum Capture
0.003761053
FITxx010301_MinMaxAvg[7]
MAVE_FITxx010301_Avg_Monthly
MAVE
Moving Average
StorageArray
FITxx010301_Avg_Array
WeightArray
?
FITxx010301_MinMaxAvg[8]
TOT_FITxx010301_Total_Monthly
TOT
Totalizer
TimeBase
ProgProgReq
ProgOperReq
ProgStartReq
ProgStopReq
ProgResetReq
Total
OldTotal
ProgOper
RunStop
ProgResetDone
TargetFlag
TargetDev1Flag
TargetDev2Flag
9479.419
3189.7717
ODC EW1 Total Flow
Monthly
Total_Flows[6]
ODC_Flow1
1-H2
Pxxxx010301_Running
2-H4
Pxxxx010301_NotRunning
2-H5

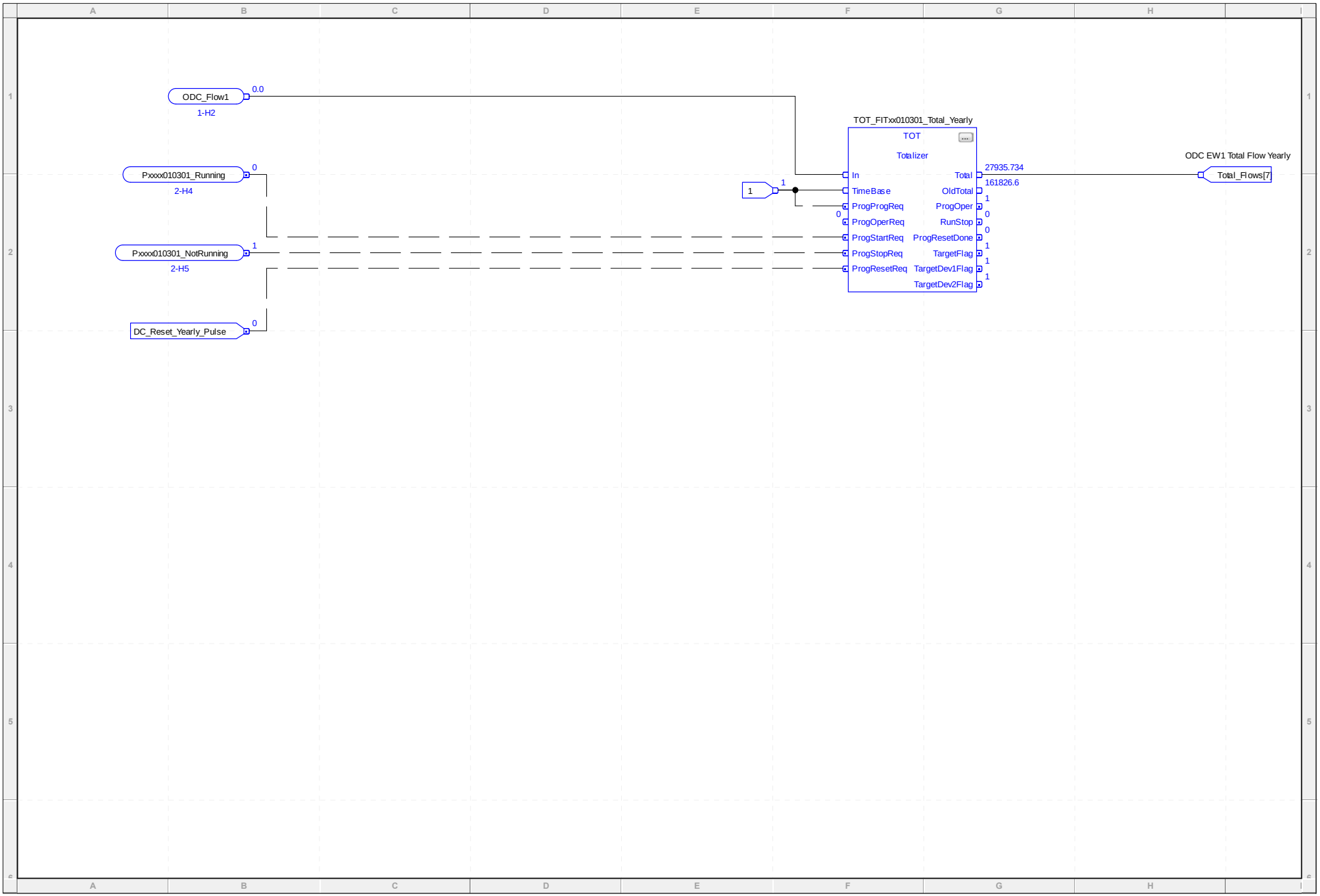
ODC_Flow1
0.0
1-H2
Pxxxx010301_Running
0
2-H4
Pxxxx010301_NotRunning
1
2-H5
DC_Reset_Yearly_Pulse
0
1
1
TOT_FITxx010301_Total_Yearly
TOT
Totalizer
In
TimeBase
ProgProgReq
ProgOperReq
ProgStartReq
ProgStopReq
ProgResetReq
Total
OldTotal
ProgOper
RunStop
ProgResetDone
TargetFlag
TargetDev1Flag
TargetDev2Flag
27935.734
161826.6
1
0
0
1
1
1
ODC EW1 Total Flow Yearly
Total_Flows[7]

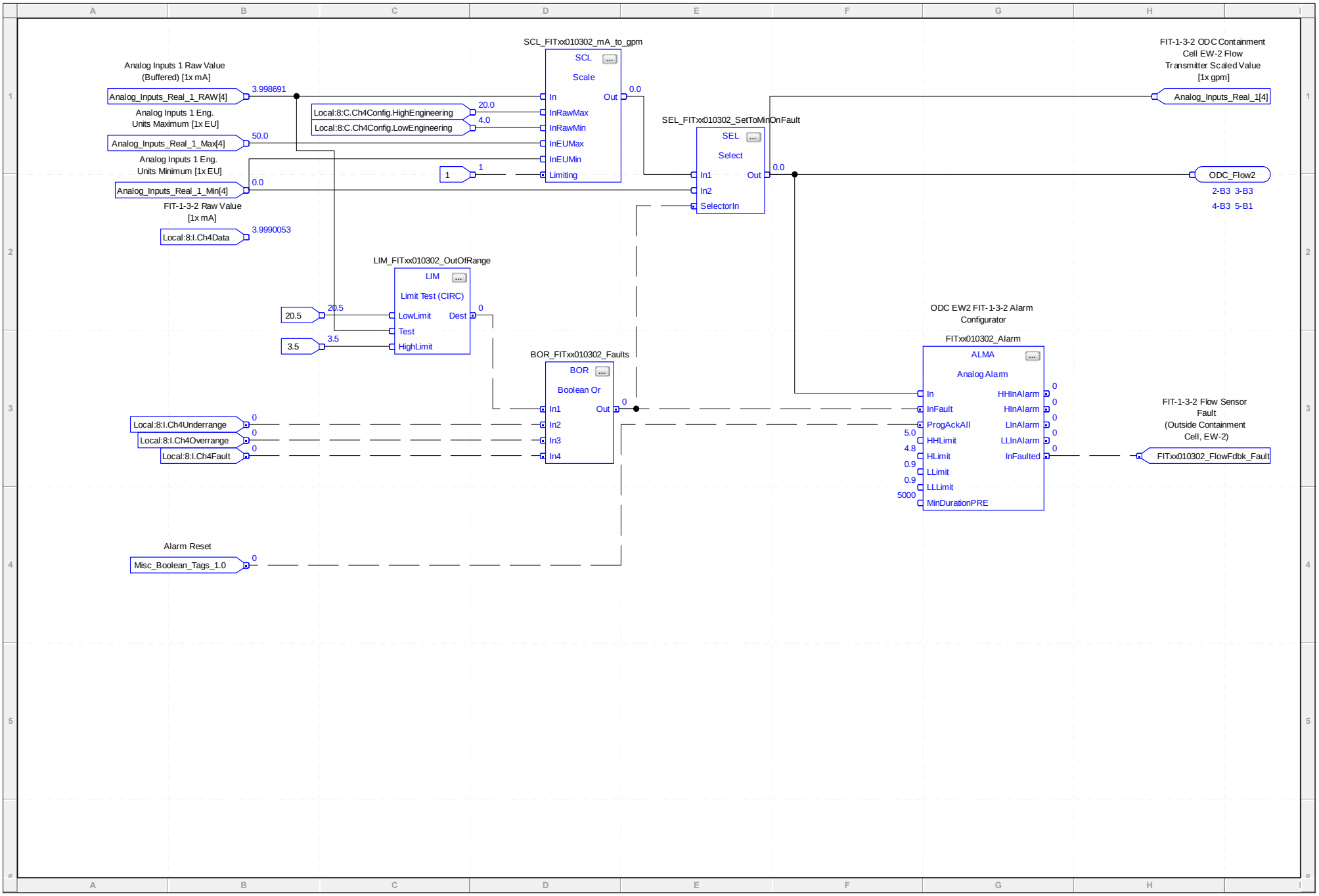
Analog Inputs 1 Raw Value (Buffered) [1x mA]
Analog_Inputs_Real_1_RAW[4]
3.998691
Analog Inputs 1 Eng. Units Maximum [1x EU]
Analog_Inputs_Real_1_Max[4]
50.0
Analog Inputs 1 Eng. Units Minimum [1x EU]
Analog_Inputs_Real_1_Min[4]
0.0
FIT-1-3-2 Raw Value [1x mA]
Local:8:I.Ch4Data
3.9990053
SCL_FITxx010302_mA_to_gpm
SCL
Scale
In
Out
0.0
Local:8:C.Ch4Config.HighEngineering
20.0
Local:8:C.Ch4Config.LowEngineering
4.0
InRawMax
InRawMin
InEUMax
InEUMin
1
Limiting
SEL_FITxx010302_SetToMinOnFault
SEL
Select
In1
In2
SelectorIn
FIT-1-3-2 ODC Containment Cell EW-2 Flow Transmitter Scaled Value [1x gpm]
Analog_Inputs_Real_1[4]
ODC_Flow2
2-B3 3-B3
4-B3 5-B1
LIM_FITxx010302_OutOfRange
LIM
Limit Test (CIRC)
LowLimit
Test
HighLimit
Dest
20.5
3.5
BOR_FITxx010302_Faults
BOR
Boolean Or
In1
In2
In3
In4
Local:8:I.Ch4Underrange
Local:8:I.Ch4Overrange
Local:8:I.Ch4Fault
ODC EW2 FIT-1-3-2 Alarm Configurator
FITxx010302_Alarm
ALMA
Analog Alarm
In
InFault
ProgAckAll
HHLimit
HLimit
LLimit
LLLimit
MinDurationPRE
HHInAlarm
HInAlarm
LInAlarm
LLInAlarm
InFaulted
5.0
4.8
0.9
5000
FIT-1-3-2 Flow Sensor Fault (Outside Containment Cell, EW-2)
FITxx010302_FlowFdbk_Fault
Alarm Reset
Misc_Boolean_Tags_1.0

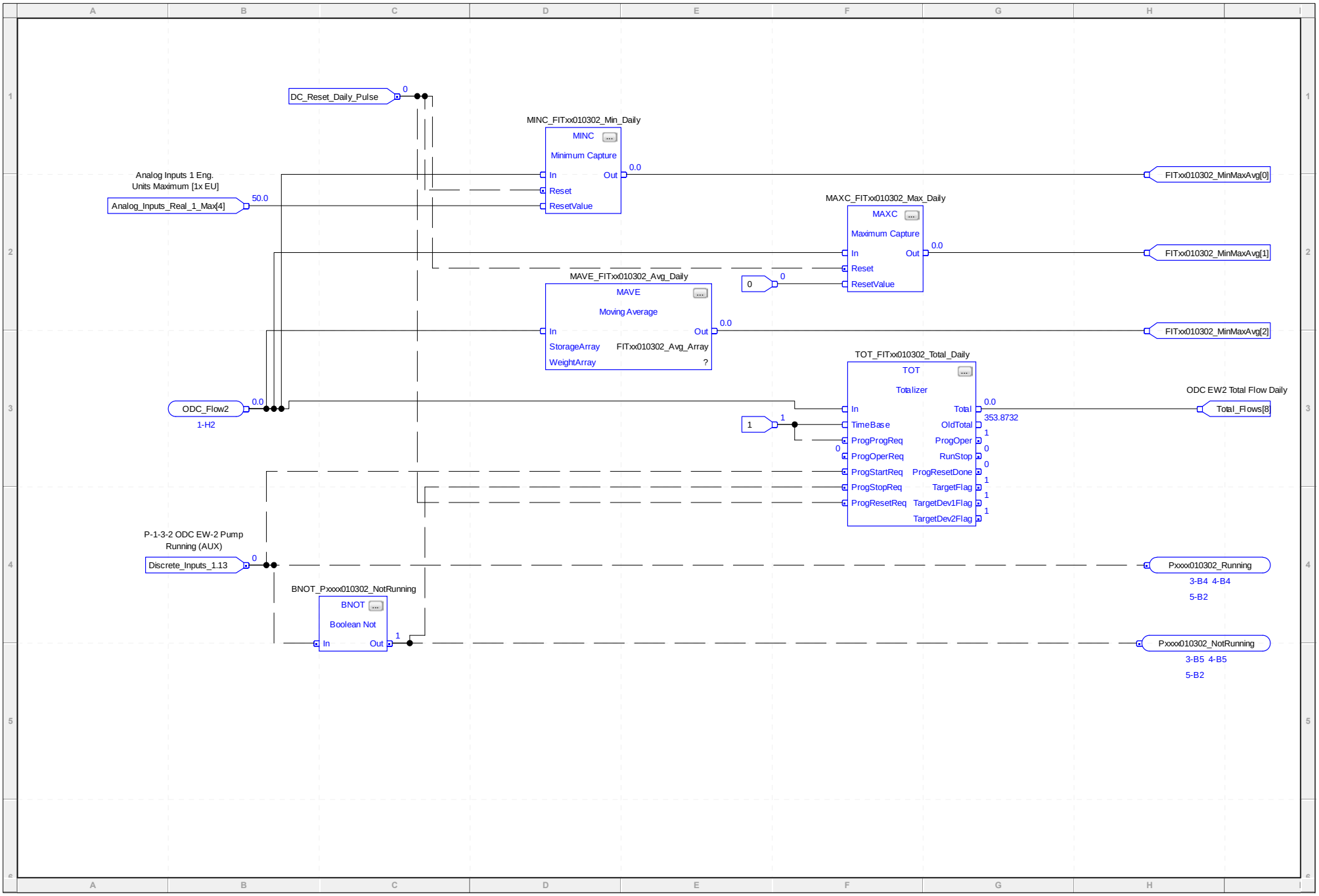
DC_Reset_Daily_Pulse
0
MINC_FITxx010302_Min_Daily
MINC
Minimum Capture
In
Out
0.0
Reset
ResetValue
Analog Inputs 1 Eng.
Units Maximum [1x EU]
Analog_Inputs_Real_1_Max[4]
50.0
FITxx010302_MinMaxAvg[0]
MAXC_FITxx010302_Max_Daily
MAXC
Maximum Capture
FITxx010302_MinMaxAvg[1]
MAVE_FITxx010302_Avg_Daily
MAVE
Moving Average
StorageArray
FITxx010302_Avg_Array
WeightArray
?
FITxx010302_MinMaxAvg[2]
TOT_FITxx010302_Total_Daily
TOT
Totalizer
Total
OldTotal
353.8732
TimeBase
ProgProgReq
ProgOperReq
ProgStartReq
ProgStopReq
ProgResetReq
ProgOper
RunStop
ProgResetDone
TargetFlag
TargetDev1Flag
TargetDev2Flag
ODC EW2 Total Flow Daily
Total_Flows[8]
ODC_Flow2
1-H2
P-1-3-2 ODC EW-2 Pump
Running (AUX)
Discrete_Inputs_1.13
Pxxxx010302_Running
3-B4 4-B4
5-B2
BNOT_Pxxxx010302_NotRunning
BNOT
Boolean Not
Pxxxx010302_NotRunning
3-B5 4-B5
5-B2

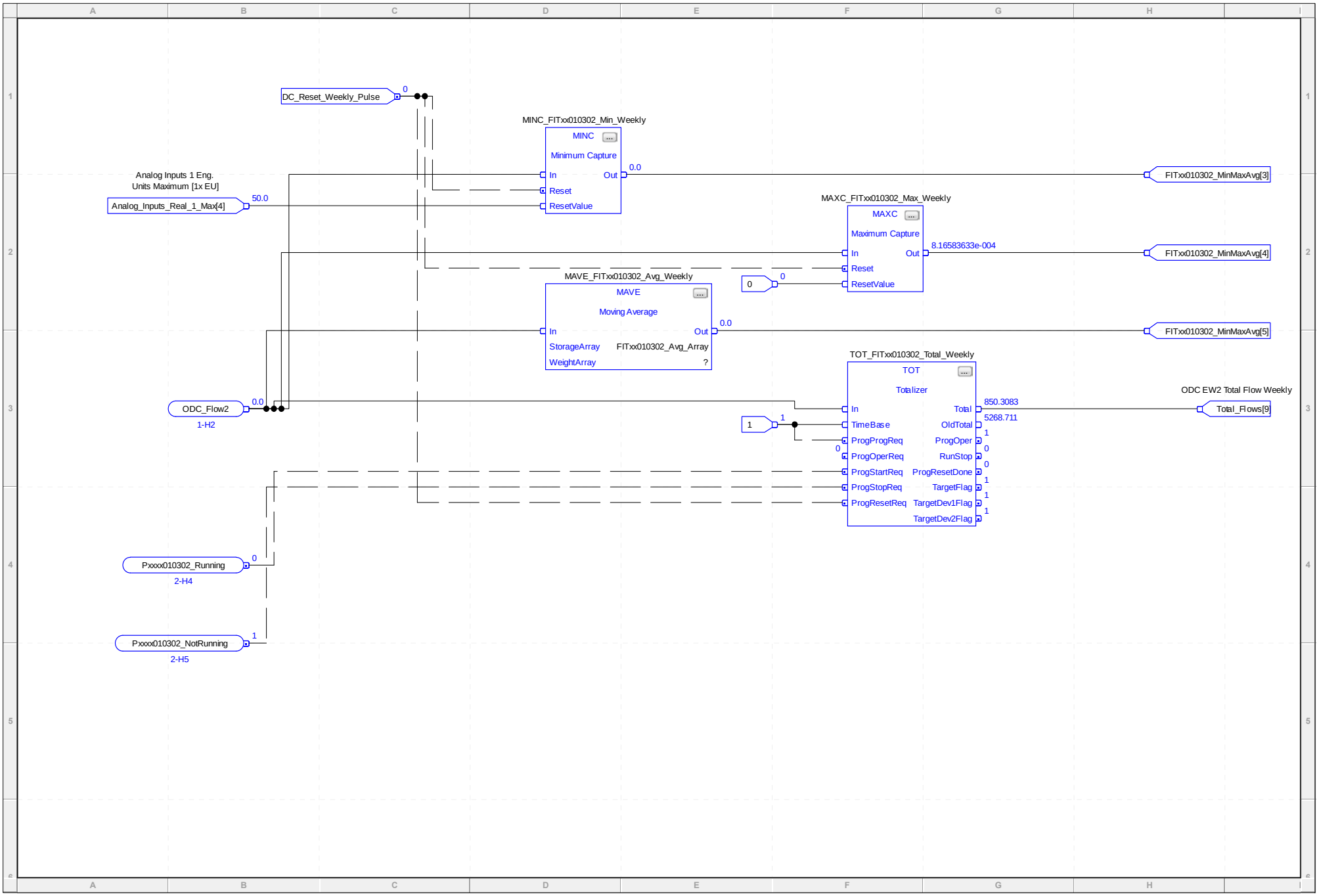
DC_Reset_Weekly_Pulse
0
MINC_FITxx010302_Min_Weekly
MINC
Minimum Capture
In
Reset
ResetValue
Out
0.0
Analog Inputs 1 Eng.
Units Maximum [1x EU]
Analog_Inputs_Real_1_Max[4]
50.0
FITxx010302_MinMaxAvg[3]
MAXC_FITxx010302_Max_Weekly
MAXC
Maximum Capture
In
Reset
ResetValue
Out
8.16583633e-004
FITxx010302_MinMaxAvg[4]
MAVE_FITxx010302_Avg_Weekly
MAVE
Moving Average
In
StorageArray
WeightArray
Out
FITxx010302_Avg_Array
?
FITxx010302_MinMaxAvg[5]
TOT_FITxx010302_Total_Weekly
TOT
Totalizer
In
TimeBase
ProgProgReq
ProgOperReq
ProgStartReq
ProgStopReq
ProgResetReq
Total
OldTotal
ProgOper
RunStop
ProgResetDone
TargetFlag
TargetDev1Flag
TargetDev2Flag
850.3083
5268.711
ODC EW2 Total Flow Weekly
Total_Flows[9]
ODC_Flow2
1-H2
Pxxxx010302_Running
2-H4
Pxxxx010302_NotRunning
2-H5

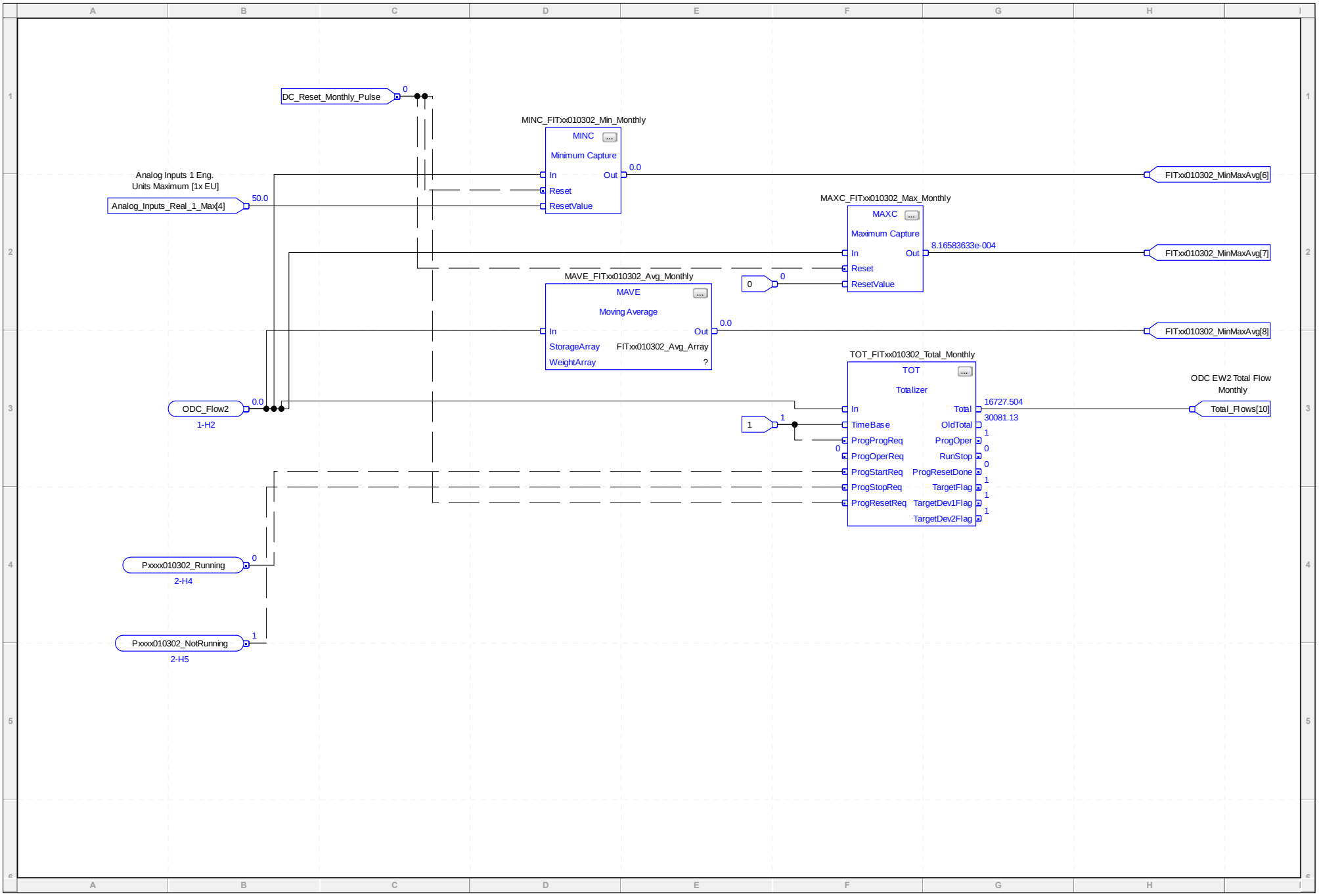
DC_Reset_Monthly_Pulse
0
MINC_FITxx010302_Min_Monthly
MINC
Minimum Capture
In
Out
0.0
Reset
ResetValue
Analog Inputs 1 Eng.
Units Maximum [1x EU]
Analog_Inputs_Real_1_Max[4]
50.0
FITxx010302_MinMaxAvg[6]
MAXC_FITxx010302_Max_Monthly
MAXC
Maximum Capture
In
Out
8.16583633e-004
Reset
ResetValue
0
FITxx010302_MinMaxAvg[7]
MAVE_FITxx010302_Avg_Monthly
MAVE
Moving Average
In
Out
0.0
StorageArray
FITxx010302_Avg_Array
WeightArray
?
FITxx010302_MinMaxAvg[8]
TOT_FITxx010302_Total_Monthly
TOT
Totalizer
ODC EW2 Total Flow
Monthly
ODC_Flow2
1-H2
0.0
In
Total
16727.504
TimeBase
OldTotal
30081.13
1
ProgProgReq
ProgOper
ProgOperReq
RunStop
ProgStartReq
ProgResetDone
ProgStopReq
TargetFlag
ProgResetReq
TargetDev1Flag
TargetDev2Flag
Total_Flows[10]
Pxxxx010302_Running
2-H4
Pxxxx010302_NotRunning
2-H5

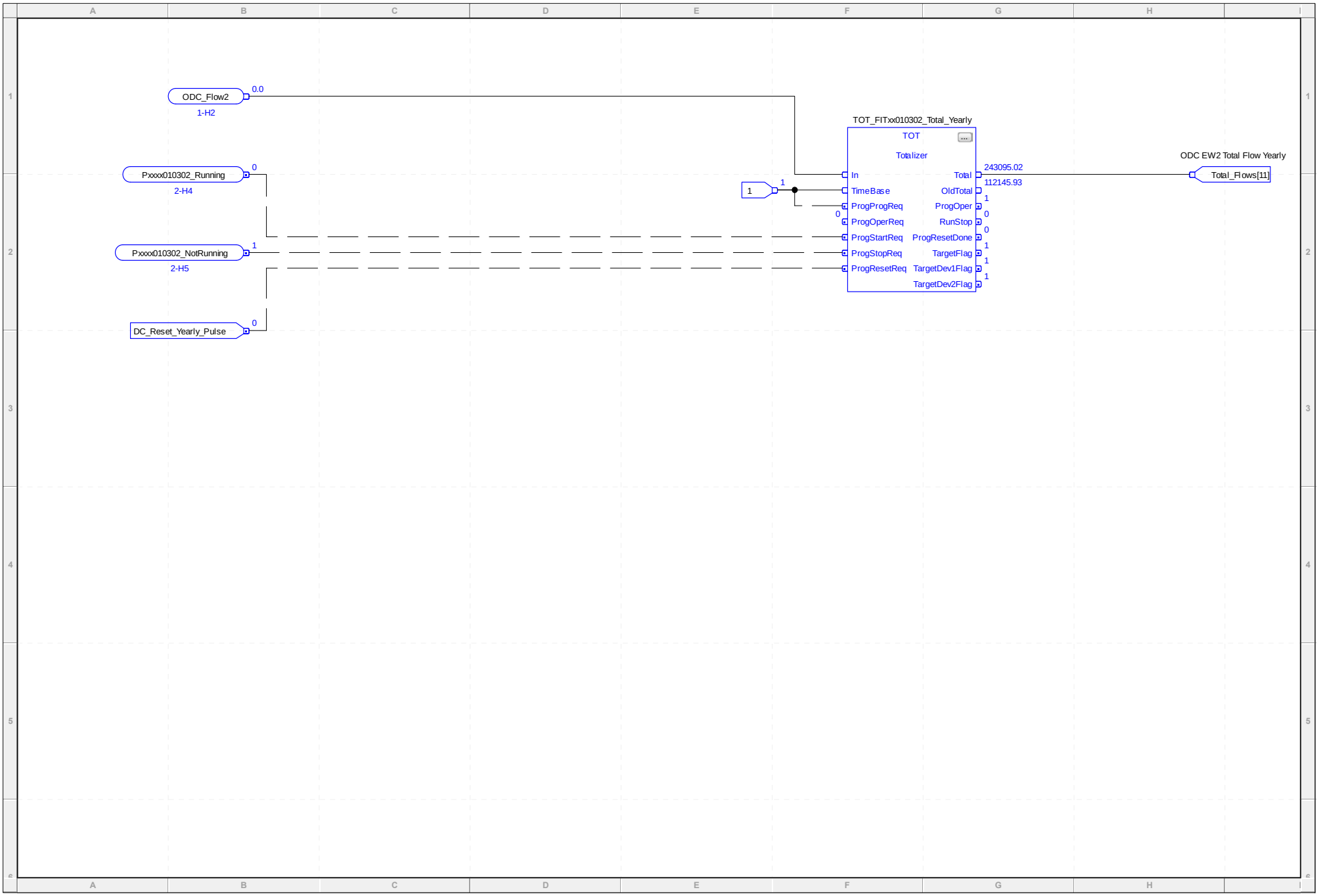
ODC_Flow2
0.0
1-H2
Pxxxx010302_Running
0
2-H4
Pxxxx010302_NotRunning
1
2-H5
DC_Reset_Yearly_Pulse
0
1
1
TOT_FITxx010302_Total_Yearly
TOT
Totalizer
In
TimeBase
ProgProgReq
ProgOperReq
ProgStartReq
ProgStopReq
ProgResetReq
Total
OldTotal
ProgOper
RunStop
ProgResetDone
TargetFlag
TargetDev1Flag
TargetDev2Flag
243095.02
112145.93
1
0
0
1
1
1
ODC EW2 Total Flow Yearly
Total_Flows[11]

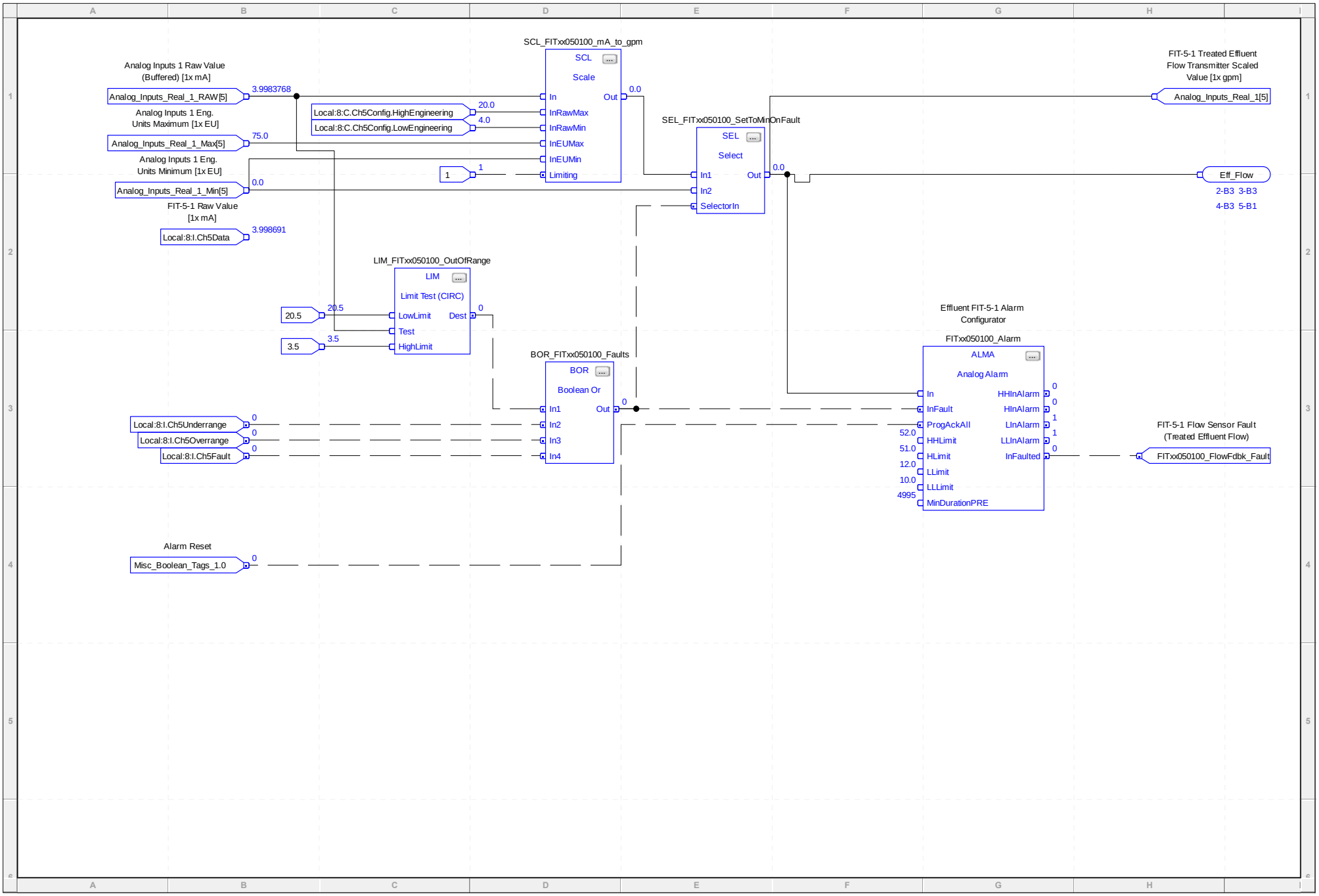
SCL_FITxx050100_mA_to_gpm
SCL
Scale
Analog Inputs 1 Raw Value (Buffered) [1x mA]
Analog_Inputs_Real_1_RAW[5]
3.9983768
Analog Inputs 1 Eng. Units Maximum [1x EU]
Analog_Inputs_Real_1_Max[5]
75.0
Analog Inputs 1 Eng. Units Minimum [1x EU]
Analog_Inputs_Real_1_Min[5]
0.0
FIT-5-1 Raw Value [1x mA]
Local:8:I.Ch5Data
3.998691
Local:8:C.Ch5Config.HighEngineering
20.0
Local:8:C.Ch5Config.LowEngineering
4.0
1
In
InRawMax
InRawMin
InEUMax
InEUMin
Limiting
Out
0.0
SEL_FITxx050100_SetToMinOnFault
SEL
Select
In1
In2
SelectorIn
Out
0.0
FIT-5-1 Treated Effluent Flow Transmitter Scaled Value [1x gpm]
Analog_Inputs_Real_1[5]
Eff_Flow
2-B3 3-B3
4-B3 5-B1
LIM_FITxx050100_OutOfRange
LIM
Limit Test (CIRC)
20.5
LowLimit
Test
HighLimit
Dest
0
3.5
BOR_FITxx050100_Faults
BOR
Boolean Or
In1
In2
In3
In4
Out
0
Local:8:I.Ch5Underrange
Local:8:I.Ch5Overrange
Local:8:I.Ch5Fault
Effluent FIT-5-1 Alarm Configurator
FITxx050100_Alarm
ALMA
Analog Alarm
In
InFault
ProgAckAll
HHLimit
HLimit
LLimit
LLLimit
MinDurationPRE
52.0
51.0
12.0
10.0
4995
HHInAlarm
HInAlarm
LInAlarm
LLInAlarm
InFaulted
FIT-5-1 Flow Sensor Fault (Treated Effluent Flow)
FITxx050100_FlowFdbk_Fault
Alarm Reset
Misc_Boolean_Tags_1.0

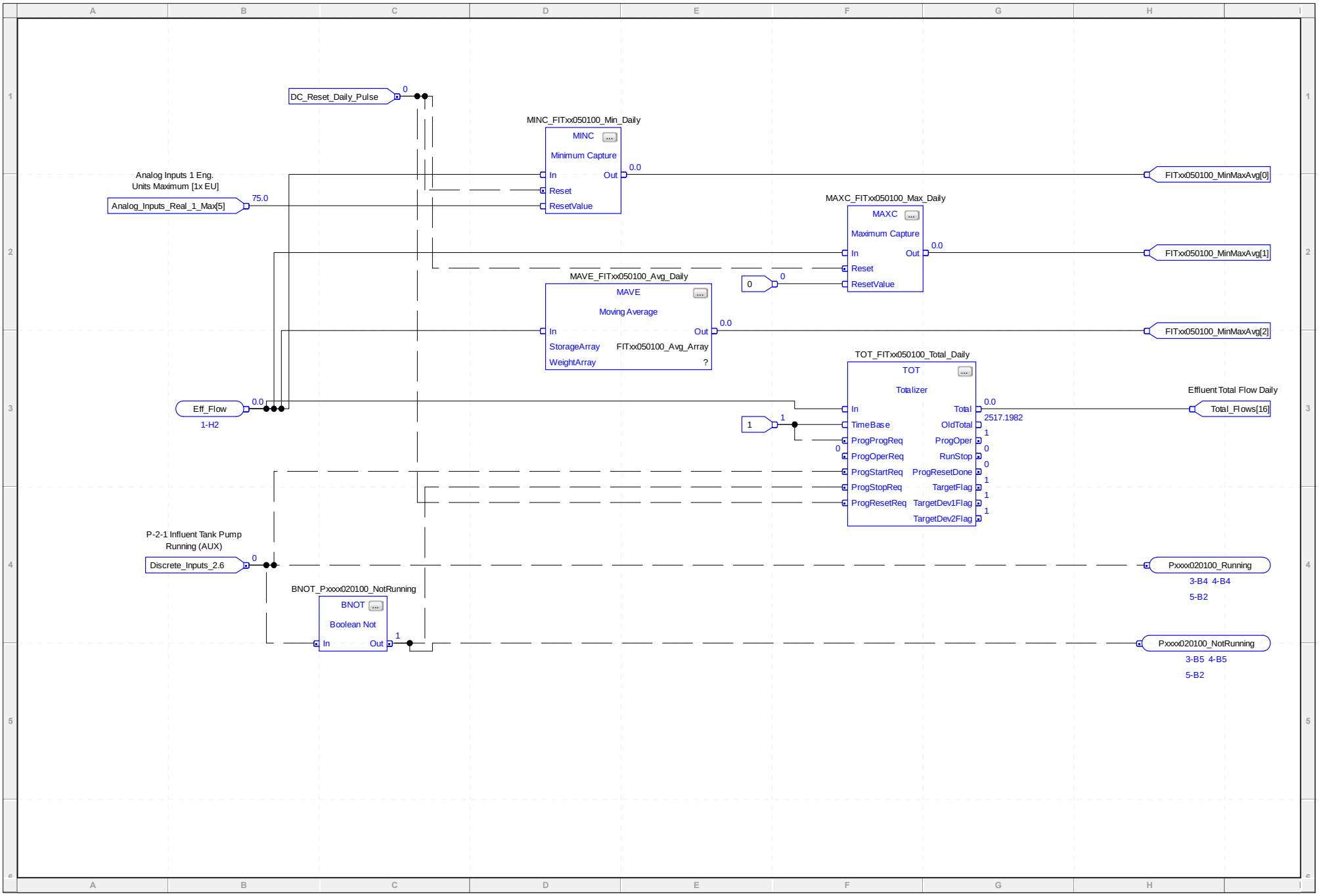
DC_Reset_Daily_Pulse
0
MINC_FITxx050100_Min_Daily
MINC
Minimum Capture
In
Out
0.0
Reset
ResetValue
Analog Inputs 1 Eng.
Units Maximum [1x EU]
Analog_Inputs_Real_1_Max[5]
75.0
FITxx050100_MinMaxAvg[0]
MAXC_FITxx050100_Max_Daily
MAXC
Maximum Capture
FITxx050100_MinMaxAvg[1]
MAVE_FITxx050100_Avg_Daily
MAVE
Moving Average
StorageArray
FITxx050100_Avg_Array
WeightArray
?
FITxx050100_MinMaxAvg[2]
TOT_FITxx050100_Total_Daily
TOT
Totalizer
Total
OldTotal
2517.1982
TimeBase
ProgProgReq
ProgOperReq
ProgStartReq
ProgStopReq
ProgResetReq
ProgOper
RunStop
ProgResetDone
TargetFlag
TargetDev1Flag
TargetDev2Flag
Effluent Total Flow Daily
Total_Flows[16]
Eff_Flow
1-H2
P-2-1 Influent Tank Pump
Running (AUX)
Discrete_Inputs_2.6
Pxxxx020100_Running
3-B4 4-B4
5-B2
BNOT_Pxxxx020100_NotRunning
BNOT
Boolean Not
Pxxxx020100_NotRunning
3-B5 4-B5
5-B2

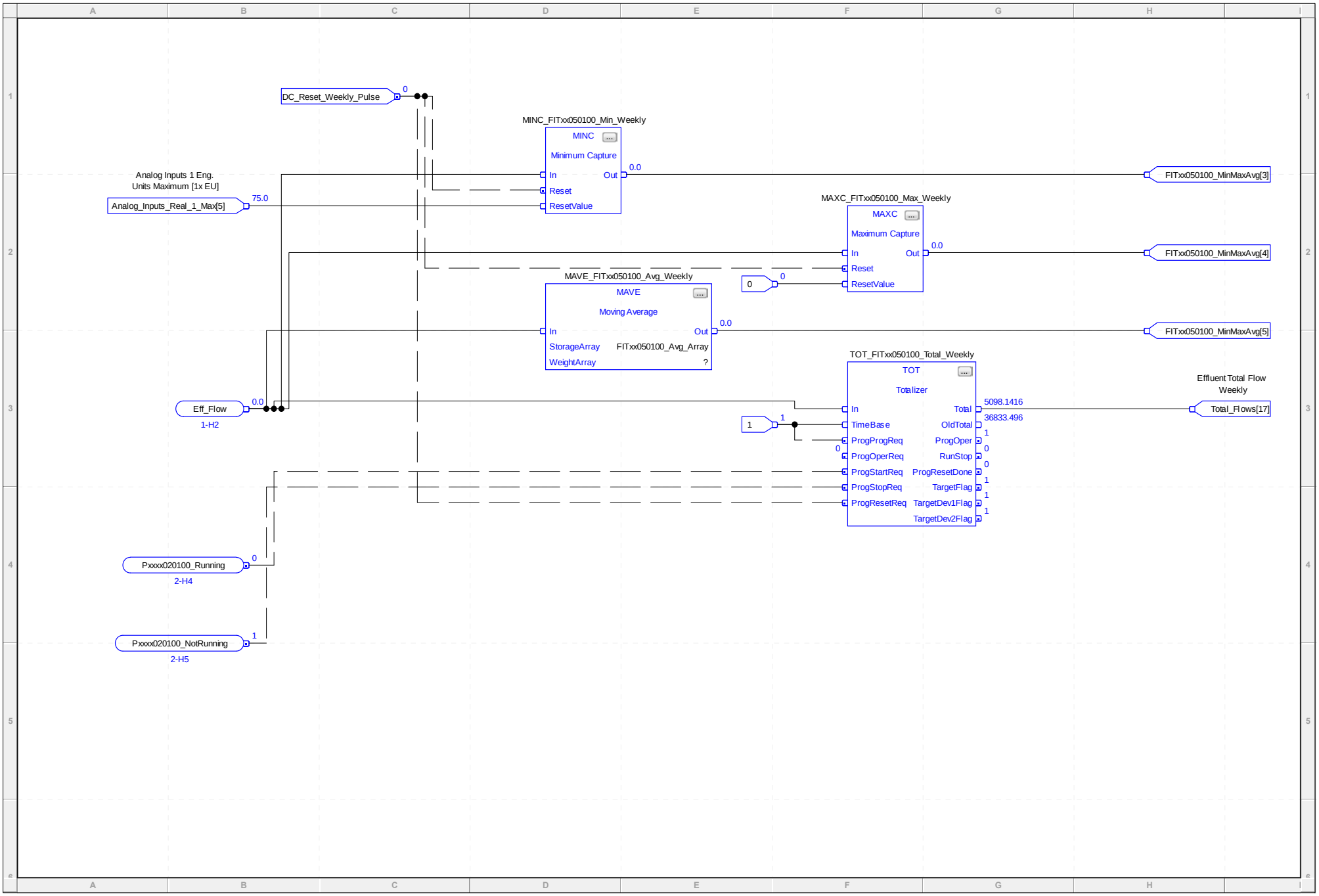
DC_Reset_Weekly_Pulse
0
MINC_FITxx050100_Min_Weekly
MINC
Minimum Capture
In
Reset
ResetValue
Out
0.0
Analog Inputs 1 Eng.
Units Maximum [1x EU]
Analog_Inputs_Real_1_Max[5]
75.0
FITxx050100_MinMaxAvg[3]
MAXC_FITxx050100_Max_Weekly
MAXC
Maximum Capture
In
Reset
ResetValue
Out
0.0
0
FITxx050100_MinMaxAvg[4]
MAVE_FITxx050100_Avg_Weekly
MAVE
Moving Average
In
StorageArray
WeightArray
Out
FITxx050100_Avg_Array
?
0.0
FITxx050100_MinMaxAvg[5]
TOT_FITxx050100_Total_Weekly
TOT
Totalizer
In
TimeBase
ProgProgReq
ProgOperReq
ProgStartReq
ProgStopReq
ProgResetReq
Total
OldTotal
ProgOper
RunStop
ProgResetDone
TargetFlag
TargetDev1Flag
TargetDev2Flag
5098.1416
36833.496
Effluent Total Flow
Weekly
Total_Flows[17]
Eff_Flow
1-H2
0.0
1
Pxxxx020100_Running
2-H4
Pxxxx020100_NotRunning
2-H5

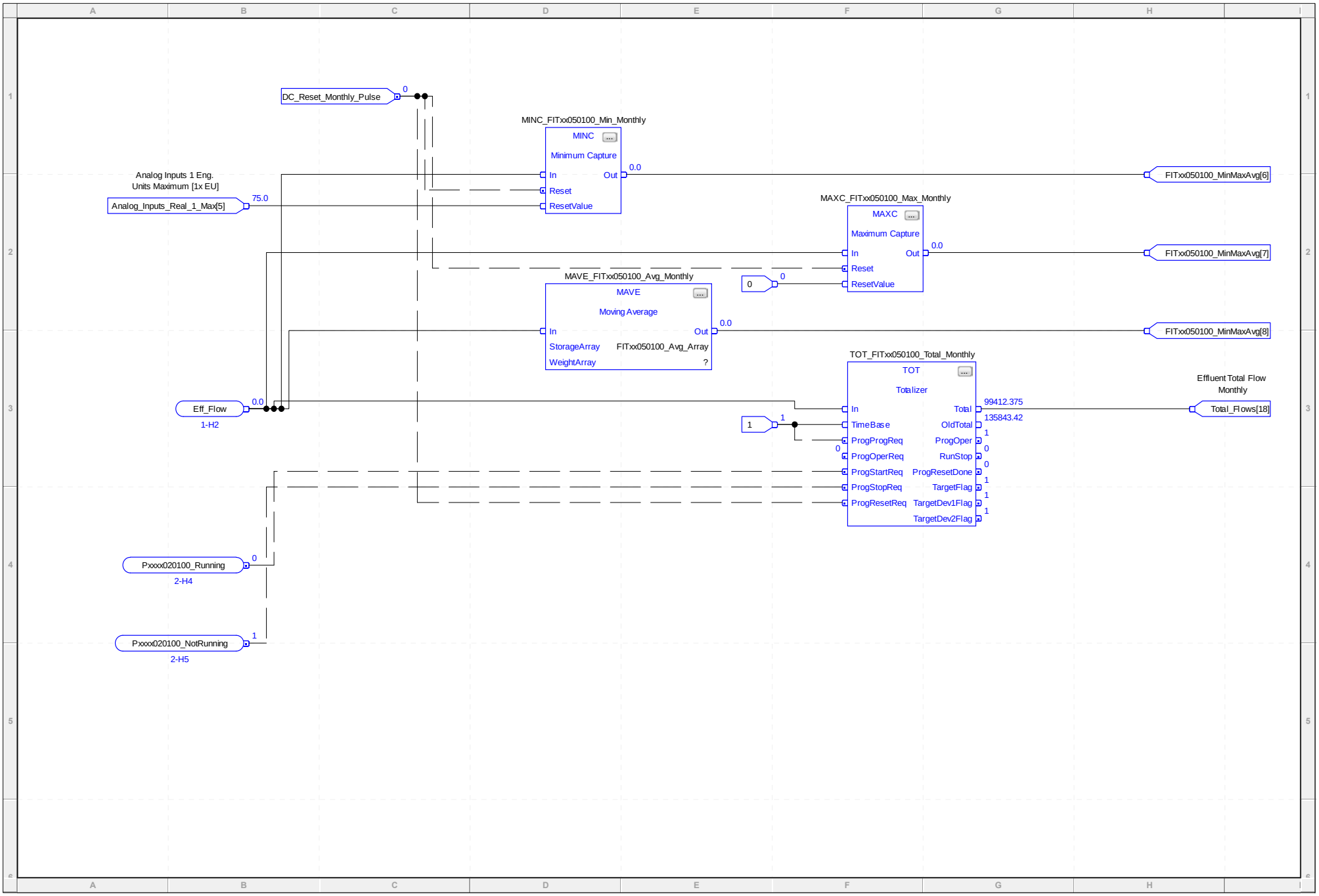
DC_Reset_Monthly_Pulse
0
MINC_FITxx050100_Min_Monthly
MINC
Minimum Capture
In
Reset
ResetValue
Out
0.0
Analog Inputs 1 Eng.
Units Maximum [1x EU]
Analog_Inputs_Real_1_Max[5]
75.0
FITxx050100_MinMaxAvg[6]
MAXC_FITxx050100_Max_Monthly
MAXC
Maximum Capture
In
Reset
ResetValue
Out
0.0
0
FITxx050100_MinMaxAvg[7]
MAVE_FITxx050100_Avg_Monthly
MAVE
Moving Average
In
StorageArray
WeightArray
Out
FITxx050100_Avg_Array
?
0.0
FITxx050100_MinMaxAvg[8]
TOT_FITxx050100_Total_Monthly
TOT
Totalizer
In
TimeBase
ProgProgReq
ProgOperReq
ProgStartReq
ProgStopReq
ProgResetReq
Total
OldTotal
ProgOper
RunStop
ProgResetDone
TargetFlag
TargetDev1Flag
TargetDev2Flag
99412.375
135843.42
Effluent Total Flow
Monthly
Total_Flows[18]
Eff_Flow
1-H2
0.0
1
Pxxxx020100_Running
2-H4
Pxxxx020100_NotRunning
2-H5

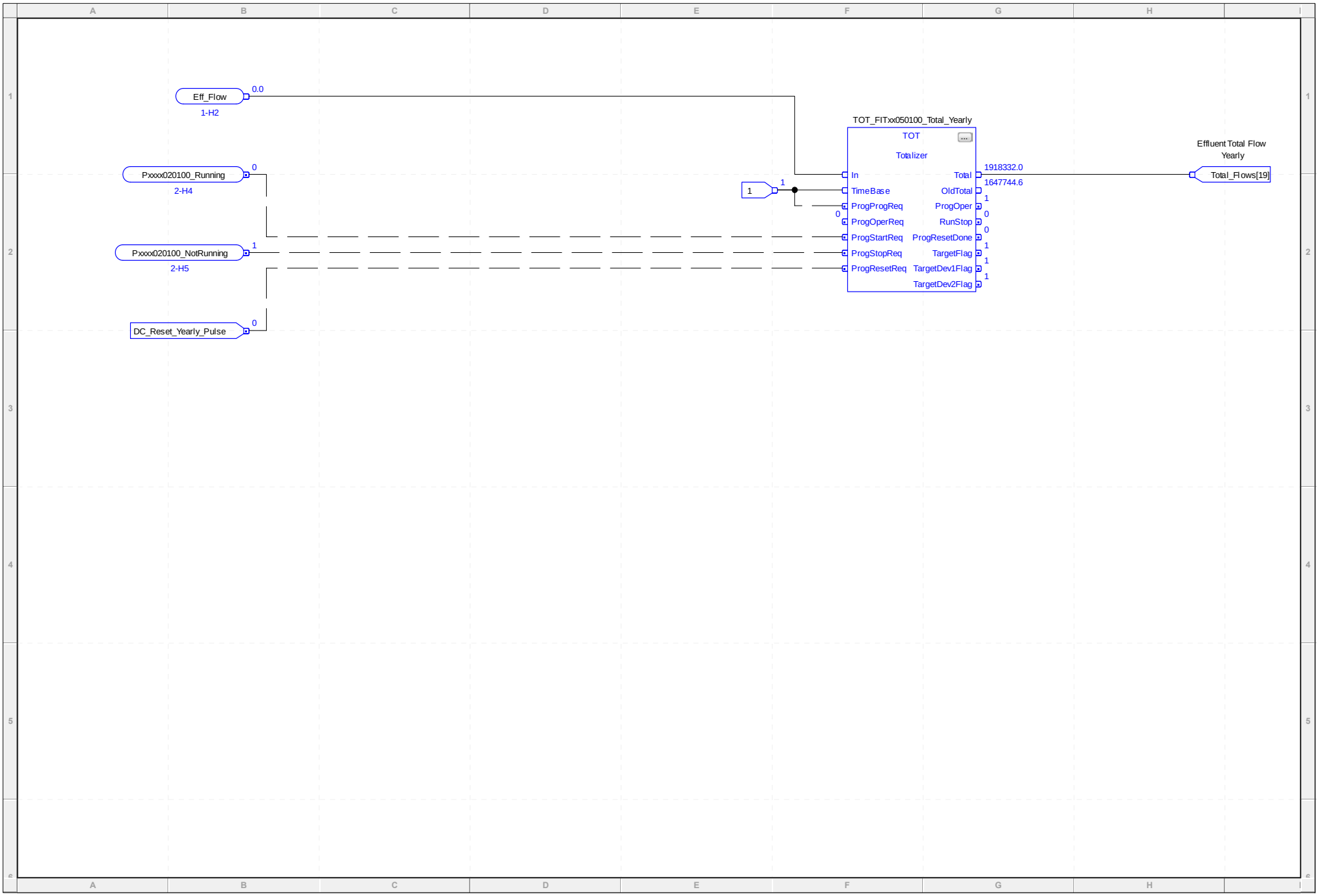
Eff_Flow
0.0
1-H2
Pxxxx020100_Running
0
2-H4
Pxxxx020100_NotRunning
1
2-H5
DC_Reset_Yearly_Pulse
0
1
1
TOT_FITxx050100_Total_Yearly
TOT
Totalizer
In
TimeBase
ProgProgReq
ProgOperReq
ProgStartReq
ProgStopReq
ProgResetReq
Total
OldTotal
ProgOper
RunStop
ProgResetDone
TargetFlag
TargetDev1Flag
TargetDev2Flag
0
1918332.0
1647744.6
1
0
0
1
1
1
Effluent Total Flow Yearly
Total_Flows[19]

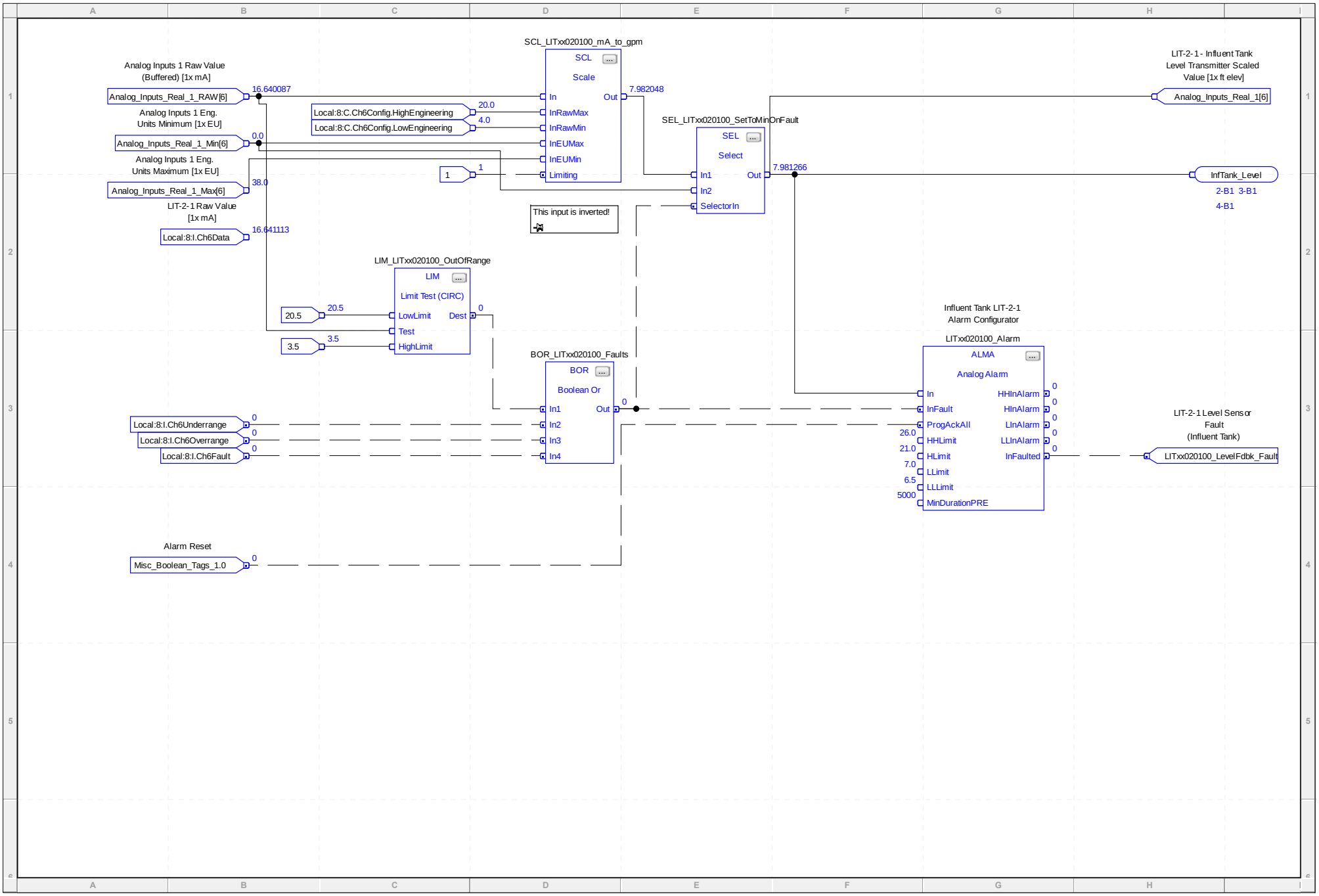
SCL_LITxx020100_mA_to_gpm
SCL
Scale
In
Out
InRawMax
InRawMin
InEUMax
InEUMin
Limiting
Analog Inputs 1 Raw Value (Buffered) [1x mA]
Analog_Inputs_Real_1_RAW[6]
16.640087
Analog Inputs 1 Eng. Units Minimum [1x EU]
Analog_Inputs_Real_1_Min[6]
0.0
Analog Inputs 1 Eng. Units Maximum [1x EU]
Analog_Inputs_Real_1_Max[6]
38.0
Local:8:C.Ch6Config.HighEngineering
20.0
Local:8:C.Ch6Config.LowEngineering
4.0
1
7.982048
SEL_LITxx020100_SetToMinOnFault
SEL
Select
In1
In2
SelectorIn
7.981266
This input is inverted!
LIT-2-1 - Influent Tank Level Transmitter Scaled Value [1x ft elev]
Analog_Inputs_Real_1[6]
InfTank_Level
2-B1 3-B1
4-B1
LIT-2-1 Raw Value [1x mA]
Local:8:I.Ch6Data
16.641113
LIM_LITxx020100_OutOfRange
LIM
Limit Test (CIRC)
LowLimit
Test
HighLimit
Dest
20.5
3.5
BOR_LITxx020100_Faults
BOR
Boolean Or
In1
In2
In3
In4
Out
Local:8:I.Ch6Underrange
Local:8:I.Ch6Overrange
Local:8:I.Ch6Fault
Influent Tank LIT-2-1 Alarm Configurator
LITxx020100_Alarm
ALMA
Analog Alarm
In
InFault
ProgAckAll
HHLimit
HLimit
LLimit
LLLimit
MinDurationPRE
HHInAlarm
HInAlarm
LInAlarm
LLInAlarm
InFaulted
26.0
21.0
7.0
6.5
5000
LIT-2-1 Level Sensor Fault (Influent Tank)
LITxx020100_LevelFdbk_Fault
Alarm Reset
Misc_Boolean_Tags_1.0

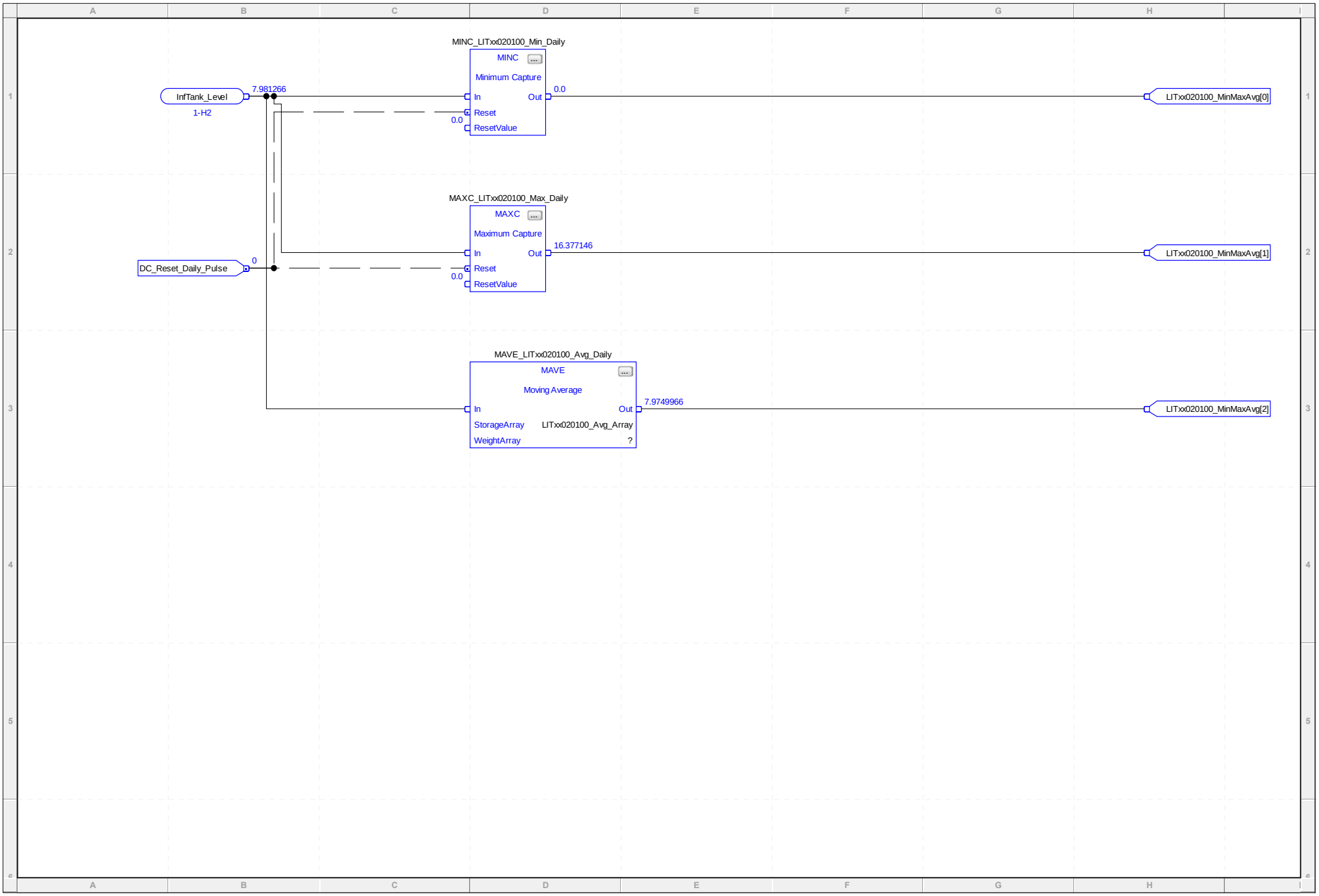
MINC_LITxx020100_Min_Daily
MINC
Minimum Capture
InfTank_Level
1-H2
7.981266
In
Out
0.0
Reset
0.0
ResetValue
LITxx020100_MinMaxAvg[0]
MAXC_LITxx020100_Max_Daily
MAXC
Maximum Capture
DC_Reset_Daily_Pulse
0
In
Out
16.377146
Reset
0.0
ResetValue
LITxx020100_MinMaxAvg[1]
MAVE_LITxx020100_Avg_Daily
MAVE
Moving Average
In
Out
7.9749966
StorageArray
LITxx020100_Avg_Array
WeightArray
?
LITxx020100_MinMaxAvg[2]

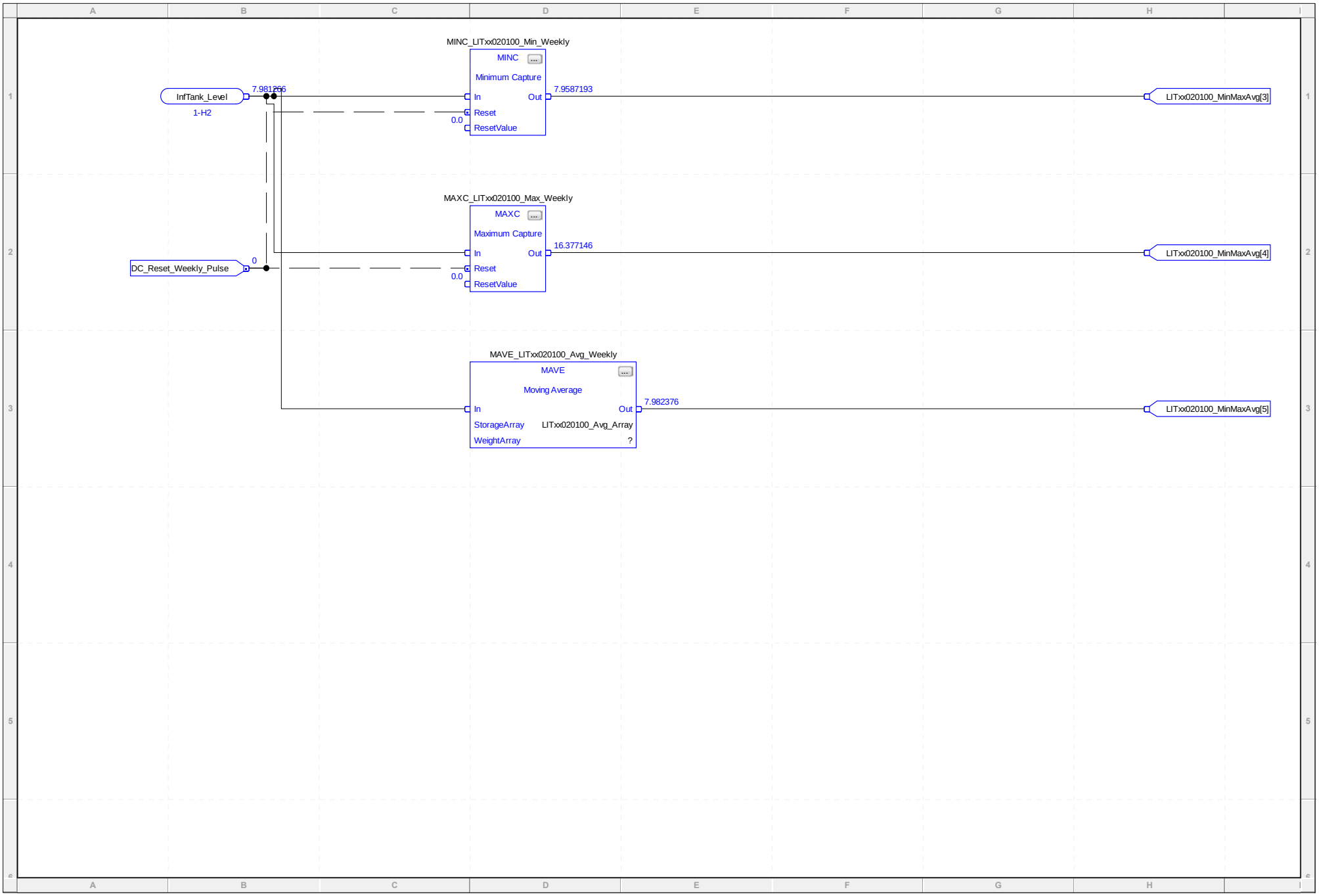
MINC_LITxx020100_Min_Weekly
MINC
Minimum Capture
InfTank_Level
1-H2
7.981266
In
Out
7.9587193
Reset
0.0
ResetValue
LITxx020100_MinMaxAvg[3]
MAXC_LITxx020100_Max_Weekly
MAXC
Maximum Capture
DC_Reset_Weekly_Pulse
0
In
Out
16.377146
Reset
0.0
ResetValue
LITxx020100_MinMaxAvg[4]
MAVE_LITxx020100_Avg_Weekly
MAVE
Moving Average
In
Out
7.982376
StorageArray
LITxx020100_Avg_Array
WeightArray
?
LITxx020100_MinMaxAvg[5]

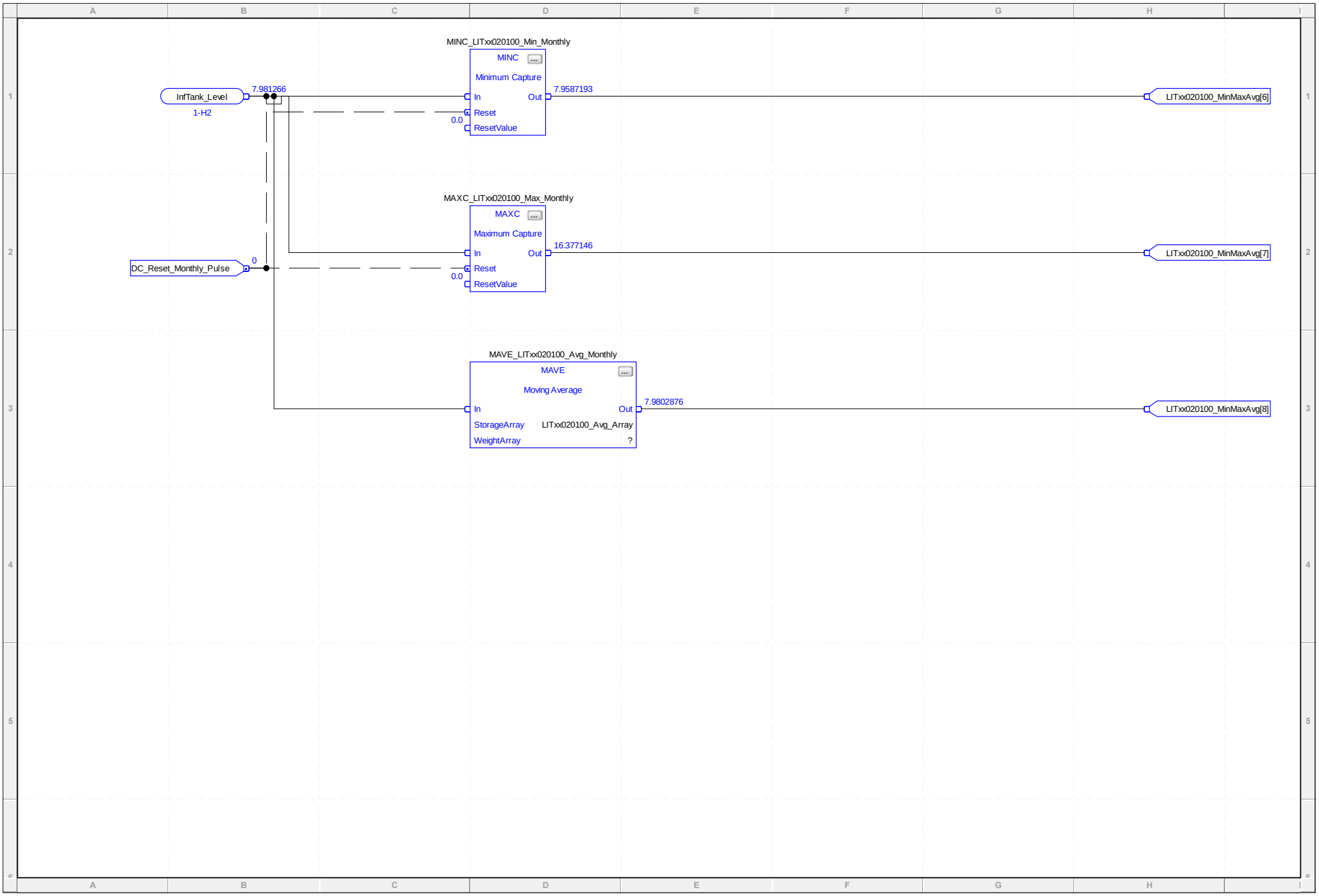
MINC_LITxx020100_Min_Monthly
MINC
Minimum Capture
InfTank_Level
1-H2
7.981266
In
Out
7.9587193
Reset
0.0
ResetValue
LITxx020100_MinMaxAvg[6]
MAXC_LITxx020100_Max_Monthly
MAXC
Maximum Capture
DC_Reset_Monthly_Pulse
0
In
Out
16.377146
Reset
0.0
ResetValue
LITxx020100_MinMaxAvg[7]
MAVE_LITxx020100_Avg_Monthly
MAVE
Moving Average
In
Out
7.9802876
StorageArray
LITxx020100_Avg_Array
WeightArray
?
LITxx020100_MinMaxAvg[8]

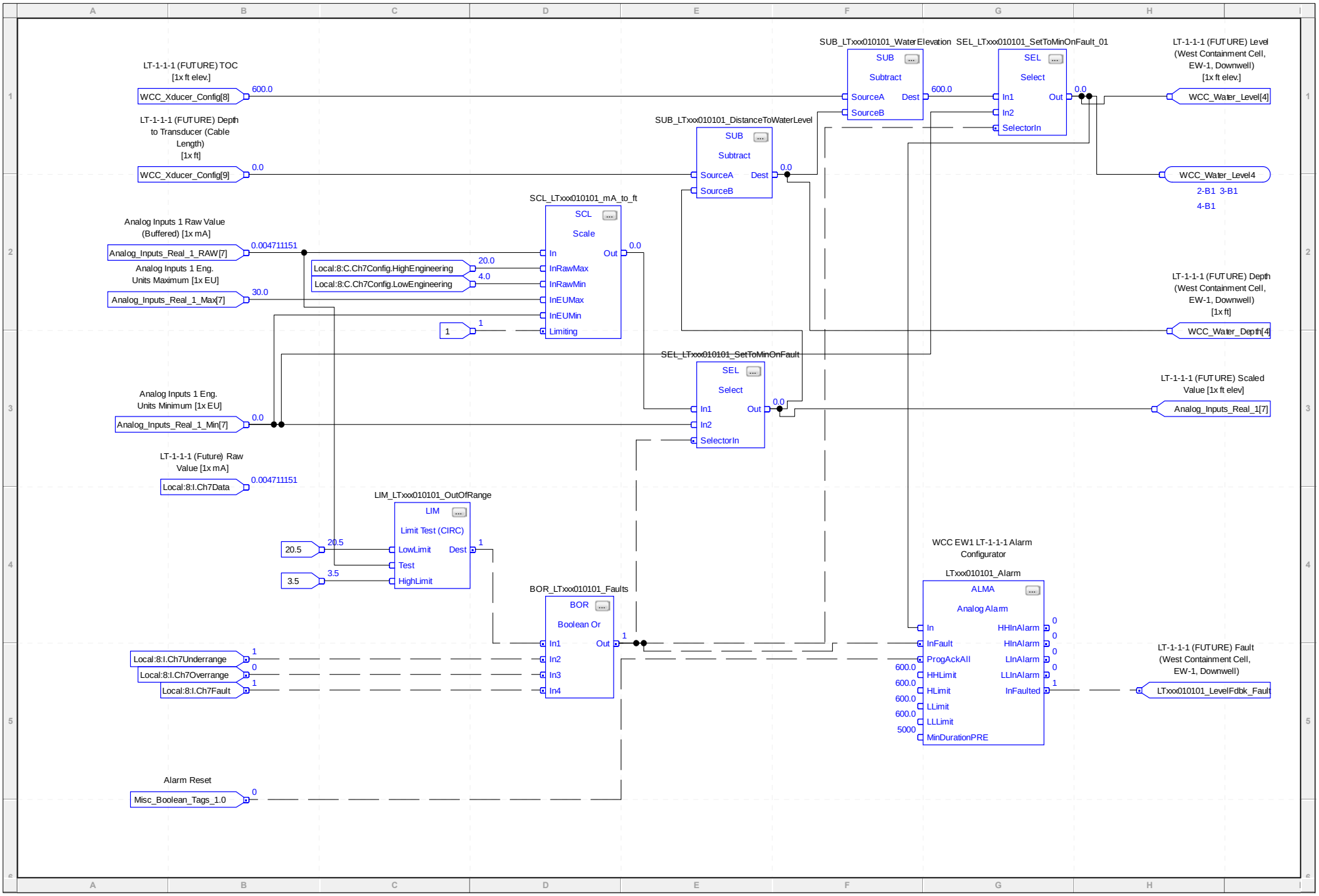
LT-1-1-1 (FUTURE) TOC [1x ft elev.]
WCC_Xducer_Config[8]
600.0
LT-1-1-1 (FUTURE) Depth to Transducer (Cable Length) [1x ft]
WCC_Xducer_Config[9]
0.0
Analog Inputs 1 Raw Value (Buffered) [1x mA]
Analog_Inputs_Real_1_RAW[7]
0.004711151
Analog Inputs 1 Eng. Units Maximum [1x EU]
Analog_Inputs_Real_1_Max[7]
30.0
Analog Inputs 1 Eng. Units Minimum [1x EU]
Analog_Inputs_Real_1_Min[7]
0.0
LT-1-1-1 (Future) Raw Value [1x mA]
Local:8:I.Ch7Data
0.004711151
SCL_LTxxx010101_mA_to_ft
SCL
Scale
In
Out
InRawMax
InRawMin
InEUMax
InEUMin
Limiting
Local:8:C.Ch7Config.HighEngineering
20.0
Local:8:C.Ch7Config.LowEngineering
4.0
1
SUB_LTxxx010101_WaterElevation
SUB
Subtract
SourceA
SourceB
Dest
SUB_LTxxx010101_DistanceToWaterLevel
SEL_LTxxx010101_SetToMinOnFault_01
SEL
Select
In1
In2
SelectorIn
Out
SEL_LTxxx010101_SetToMinOnFault
LIM_LTxxx010101_OutOfRange
LIM
Limit Test (CIRC)
LowLimit
Test
HighLimit
20.5
3.5
BOR_LTxxx010101_Faults
BOR
Boolean Or
Local:8:I.Ch7Underrange
Local:8:I.Ch7Overrange
Local:8:I.Ch7Fault
Alarm Reset
Misc_Boolean_Tags_1.0
WCC EW1 LT-1-1-1 Alarm Configurator
LTxxx010101_Alarm
ALMA
Analog Alarm
InFault
ProgAckAll
HHLimit
HLimit
LLimit
LLLimit
MinDurationPRE
HHInAlarm
HInAlarm
LInAlarm
LLInAlarm
InFaulted
600.0
5000
LT-1-1-1 (FUTURE) Level (West Containment Cell, EW-1, Downwell) [1x ft elev.]
WCC_Water_Level[4]
WCC_Water_Level4
2-B1 3-B1
4-B1
LT-1-1-1 (FUTURE) Depth (West Containment Cell, EW-1, Downwell) [1x ft]
WCC_Water_Depth[4]
LT-1-1-1 (FUTURE) Scaled Value [1x ft elev]
Analog_Inputs_Real_1[7]
LT-1-1-1 (FUTURE) Fault (West Containment Cell, EW-1, Downwell)
LTxxx010101_LevelFdbk_Fault

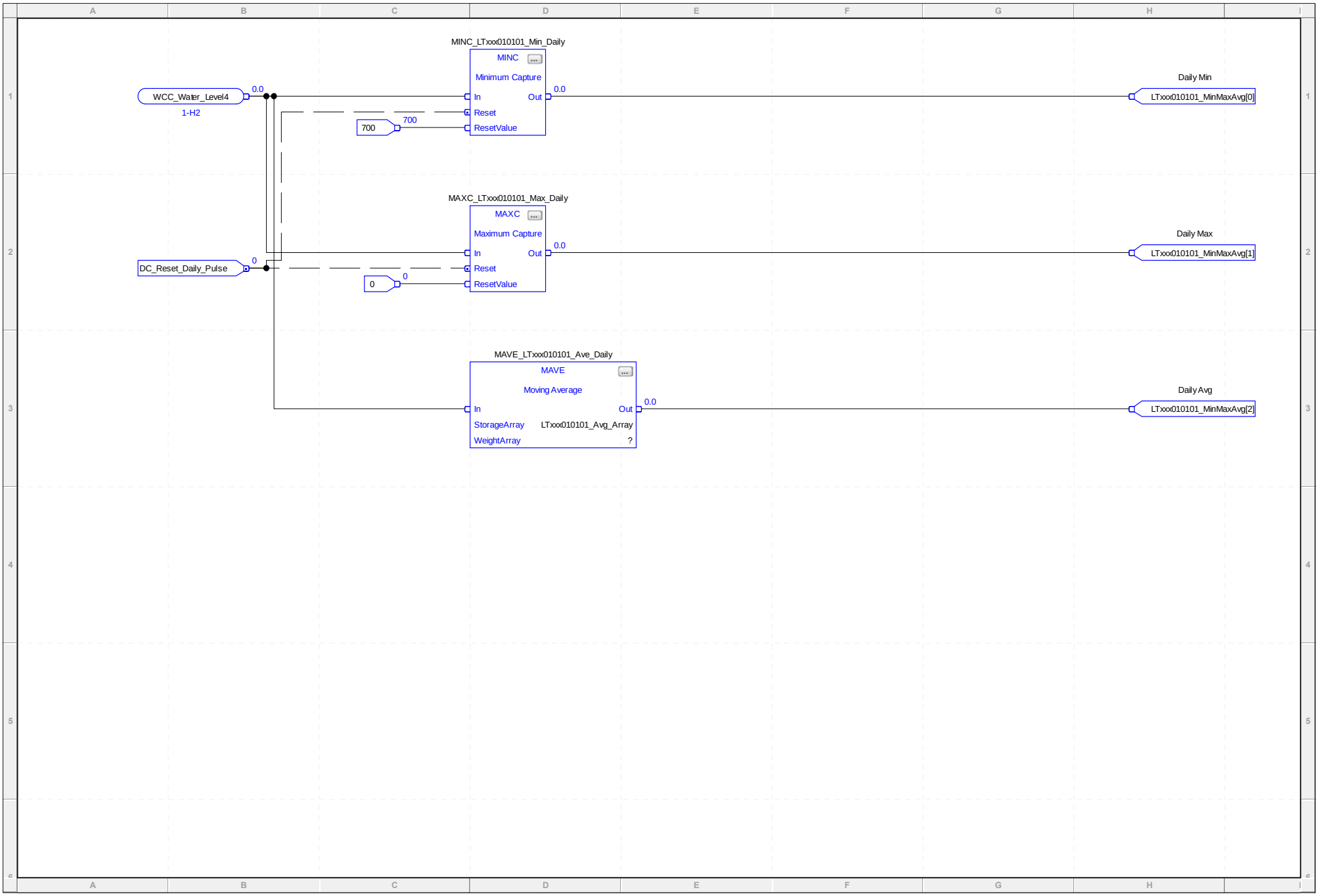
MINC_LTxxx010101_Min_Daily
MINC
Minimum Capture
WCC_Water_Level4
1-H2
0.0
In
Out
0.0
Reset
700
700
ResetValue
Daily Min
LTxxx010101_MinMaxAvg[0]
MAXC_LTxxx010101_Max_Daily
MAXC
Maximum Capture
DC_Reset_Daily_Pulse
0
In
Out
0.0
Reset
0
0
ResetValue
Daily Max
LTxxx010101_MinMaxAvg[1]
MAVE_LTxxx010101_Ave_Daily
MAVE
Moving Average
In
Out
0.0
StorageArray
LTxxx010101_Avg_Array
WeightArray
?
Daily Avg
LTxxx010101_MinMaxAvg[2]

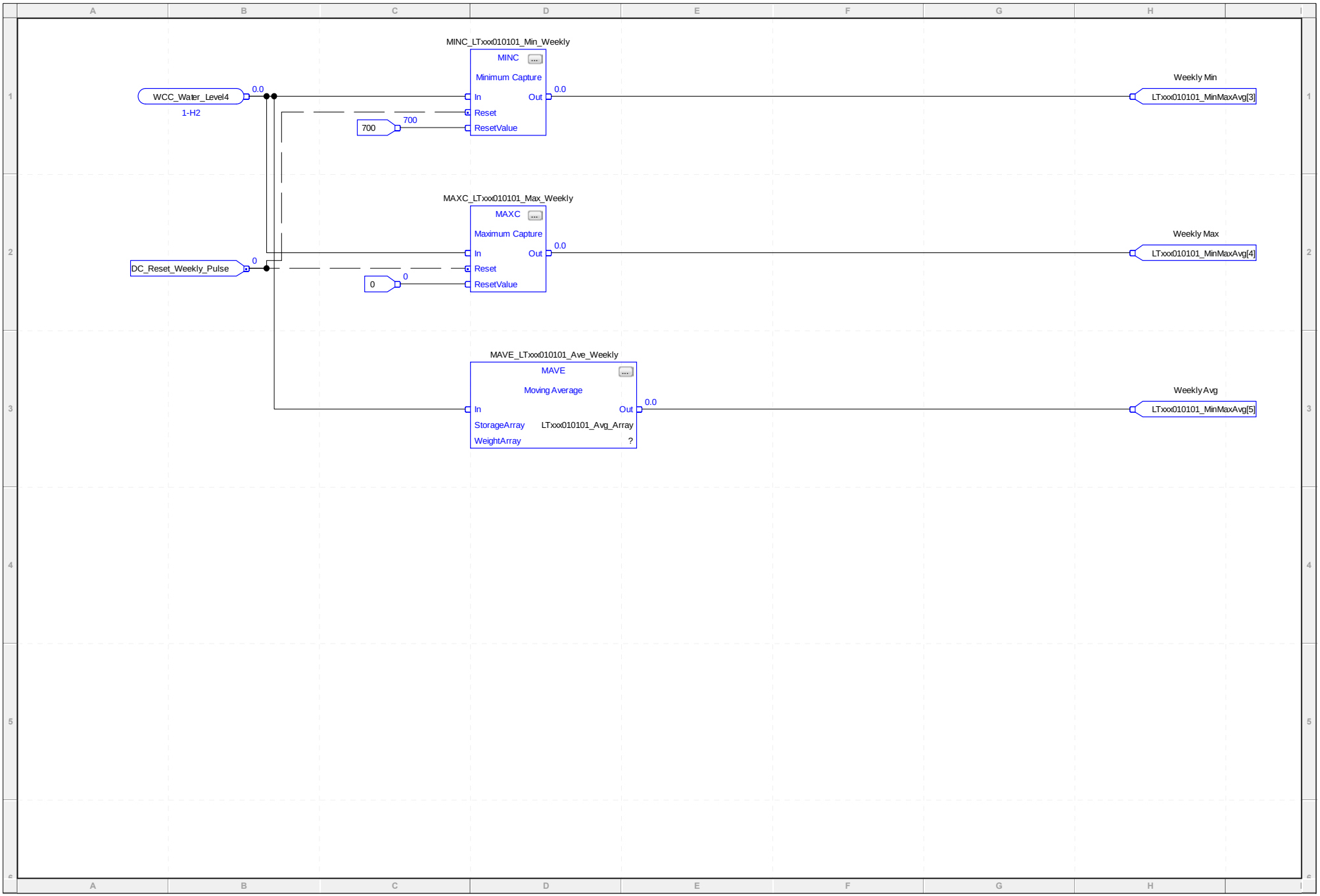
MINC_LTxxx010101_Min_Weekly
MINC
Minimum Capture
WCC_Water_Level4
1-H2
0.0
In
Out
0.0
Reset
700
700
ResetValue
Weekly Min
LTxxx010101_MinMaxAvg[3]
MAXC_LTxxx010101_Max_Weekly
MAXC
Maximum Capture
DC_Reset_Weekly_Pulse
0
In
Out
0.0
Reset
0
0
ResetValue
Weekly Max
LTxxx010101_MinMaxAvg[4]
MAVE_LTxxx010101_Ave_Weekly
MAVE
Moving Average
In
Out
0.0
StorageArray
LTxxx010101_Avg_Array
WeightArray
?
Weekly Avg
LTxxx010101_MinMaxAvg[5]

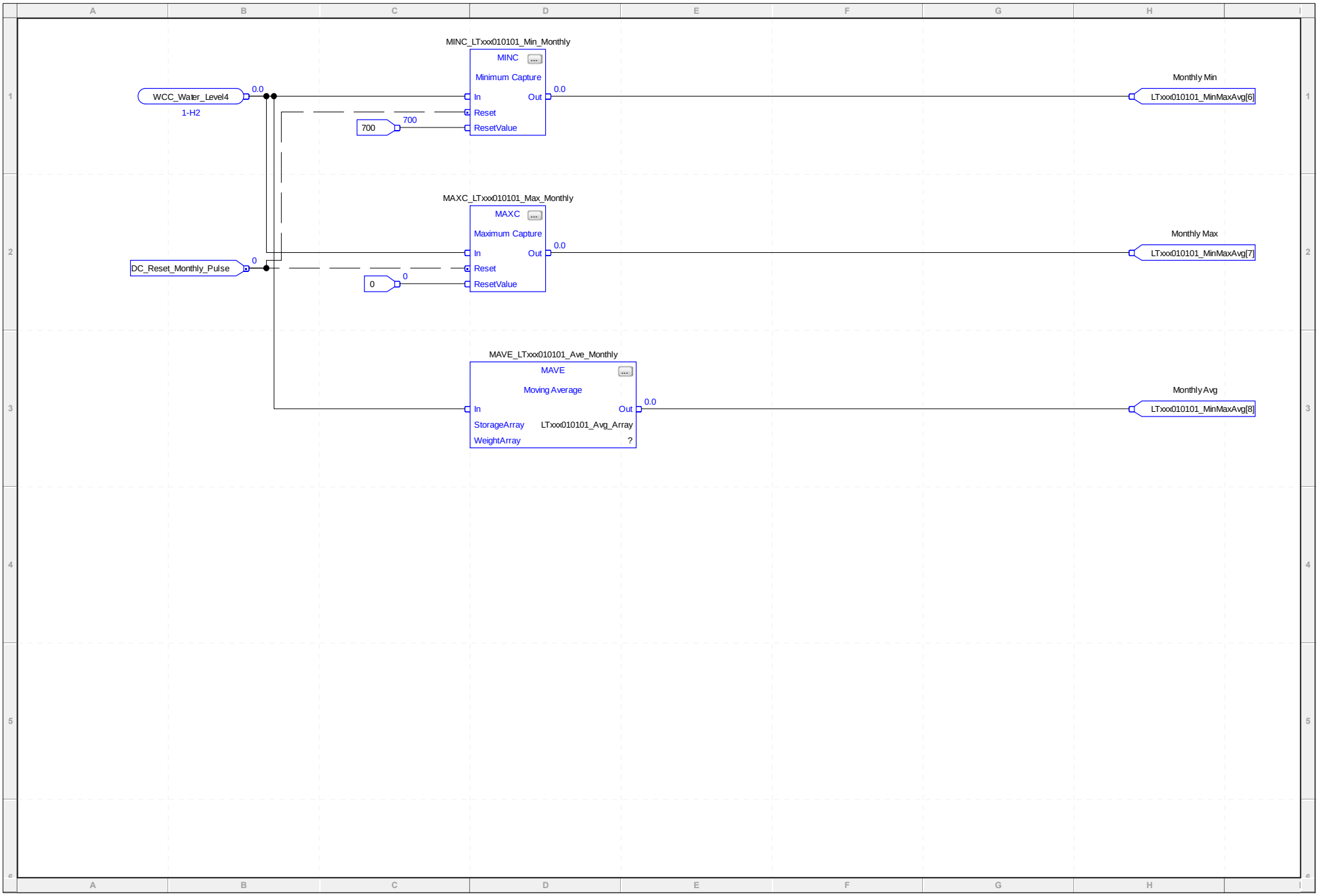
MINC_LTxxx010101_Min_Monthly
MINC
Minimum Capture
WCC_Water_Level4
1-H2
0.0
In
Out
0.0
Reset
700
700
ResetValue
Monthly Min
LTxxx010101_MinMaxAvg[6]
MAXC_LTxxx010101_Max_Monthly
MAXC
Maximum Capture
DC_Reset_Monthly_Pulse
0
In
Out
0.0
Reset
0
0
ResetValue
Monthly Max
LTxxx010101_MinMaxAvg[7]
MAVE_LTxxx010101_Ave_Monthly
MAVE
Moving Average
In
Out
0.0
StorageArray
LTxxx010101_Avg_Array
WeightArray
?
Monthly Avg
LTxxx010101_MinMaxAvg[8]

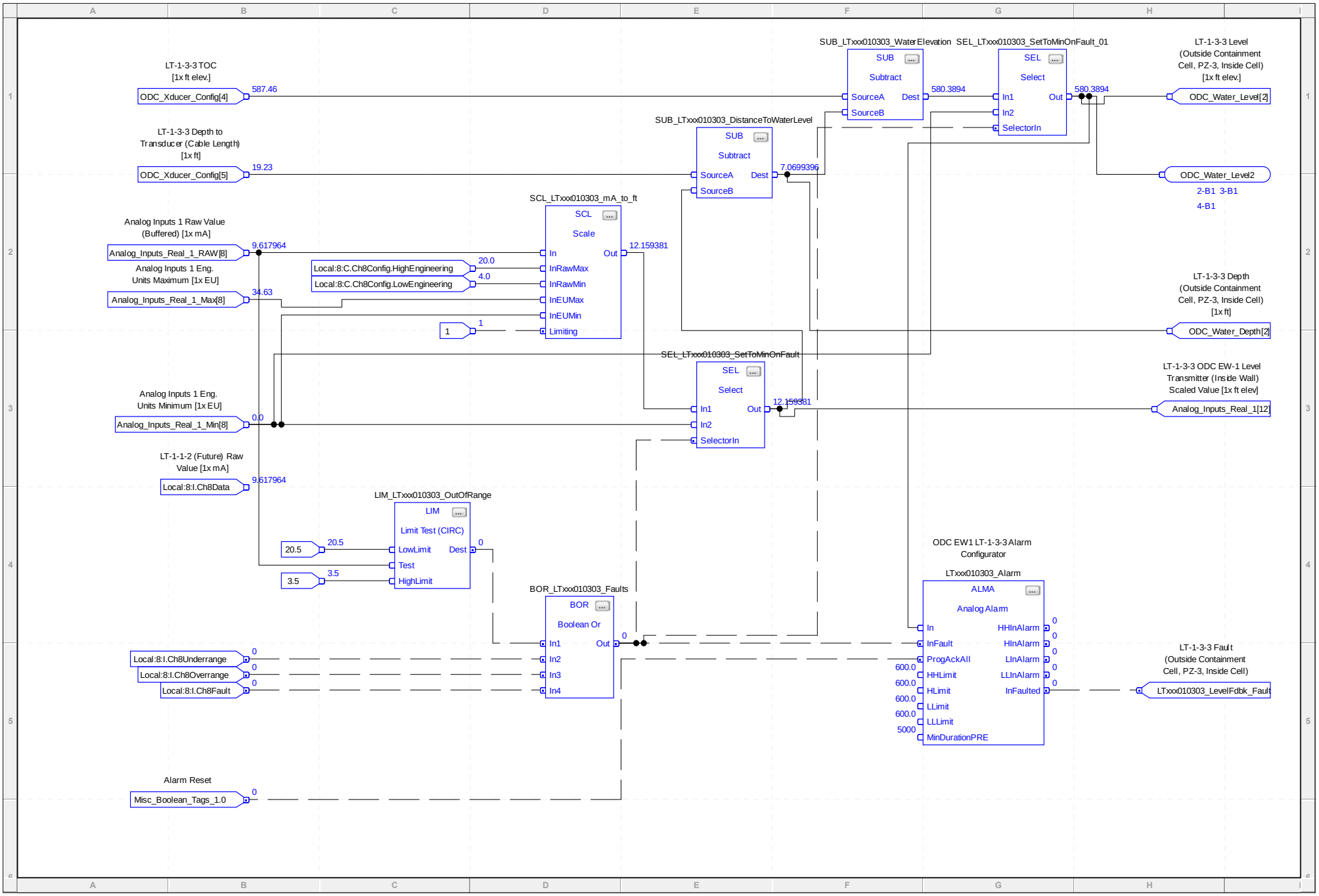
LT-1-3-3 TOC [1x ft elev.]
ODC_Xducer_Config[4]
587.46
LT-1-3-3 Depth to Transducer (Cable Length) [1x ft]
ODC_Xducer_Config[5]
19.23
Analog Inputs 1 Raw Value (Buffered) [1x mA]
Analog_Inputs_Real_1_RAW[8]
9.617964
Analog Inputs 1 Eng. Units Maximum [1x EU]
Analog_Inputs_Real_1_Max[8]
34.63
Analog Inputs 1 Eng. Units Minimum [1x EU]
Analog_Inputs_Real_1_Min[8]
0.0
LT-1-1-2 (Future) Raw Value [1x mA]
Local:8:I.Ch8Data
9.617964
SCL_LTxxx010303_mA_to_ft
SCL
Scale
In
Out
12.159381
InRawMax
InRawMin
InEUMax
InEUMin
Limiting
Local:8:C.Ch8Config.HighEngineering
20.0
Local:8:C.Ch8Config.LowEngineering
4.0
1
1
SUB_LTxxx010303_WaterElevation
SUB
Subtract
SourceA
SourceB
Dest
580.3894
SEL_LTxxx010303_SetToMinOnFault_01
SEL
Select
In1
In2
SelectorIn
Out
580.3894
LT-1-3-3 Level (Outside Containment Cell, PZ-3, Inside Cell) [1x ft elev.]
ODC_Water_Level[2]
SUB_LTxxx010303_DistanceToWaterLevel
SUB
Subtract
SourceA
SourceB
Dest
7.0699396
ODC_Water_Level2
2-B1 3-B1
4-B1
LT-1-3-3 Depth (Outside Containment Cell, PZ-3, Inside Cell) [1x ft]
ODC_Water_Depth[2]
SEL_LTxxx010303_SetToMinOnFault
SEL
Select
In1
In2
SelectorIn
Out
12.159381
LT-1-3-3 ODC EW-1 Level Transmitter (Inside Wall) Scaled Value [1x ft elev]
Analog_Inputs_Real_1[12]
LIM_LTxxx010303_OutOfRange
LIM
Limit Test (CIRC)
LowLimit
Test
HighLimit
Dest
20.5
20.5
3.5
3.5
0
BOR_LTxxx010303_Faults
BOR
Boolean Or
In1
In2
In3
In4
Out
0
Local:8:I.Ch8Underrange
Local:8:I.Ch8Overrange
Local:8:I.Ch8Fault
0
0
0
ODC EW1 LT-1-3-3 Alarm Configurator
LTxxx010303_Alarm
ALMA
Analog Alarm
In
InFault
ProgAckAll
HHLimit
HLimit
LLimit
LLLimit
MinDurationPRE
HHInAlarm
HInAlarm
LInAlarm
LLInAlarm
InFaulted
600.0
600.0
600.0
600.0
5000
LT-1-3-3 Fault (Outside Containment Cell, PZ-3, Inside Cell)
LTxxx010303_LevelFdbk_Fault
Alarm Reset
Misc_Boolean_Tags_1.0
0

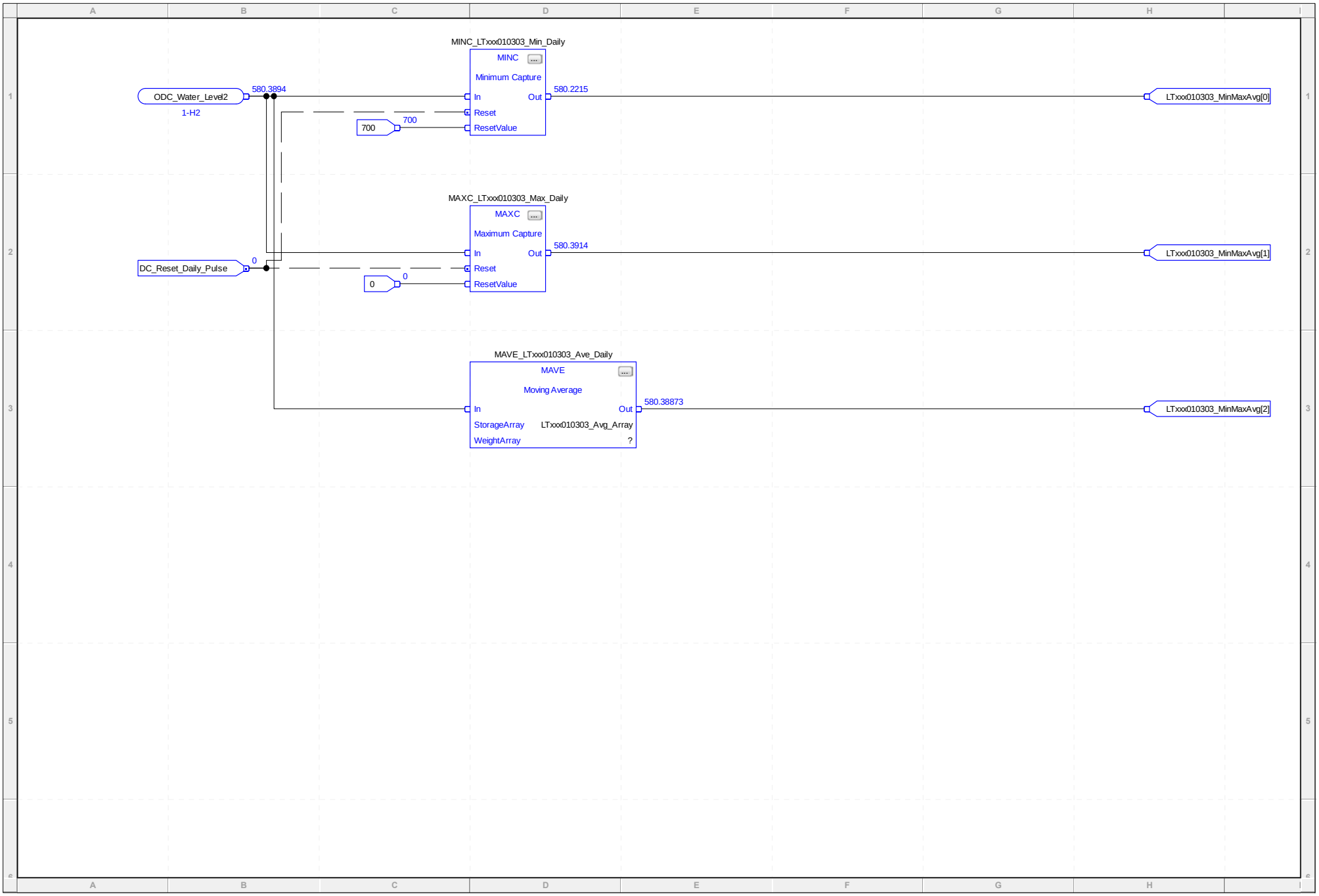
MINC_LTxxx010303_Min_Daily
MINC
Minimum Capture
ODC_Water_Level2
1-H2
580.3894
In
Out
580.2215
Reset
700
700
ResetValue
LTxxx010303_MinMaxAvg[0]
MAXC_LTxxx010303_Max_Daily
MAXC
Maximum Capture
DC_Reset_Daily_Pulse
0
In
Out
580.3914
Reset
0
0
ResetValue
LTxxx010303_MinMaxAvg[1]
MAVE_LTxxx010303_Ave_Daily
MAVE
Moving Average
In
Out
580.38873
StorageArray
LTxxx010303_Avg_Array
WeightArray
?
LTxxx010303_MinMaxAvg[2]

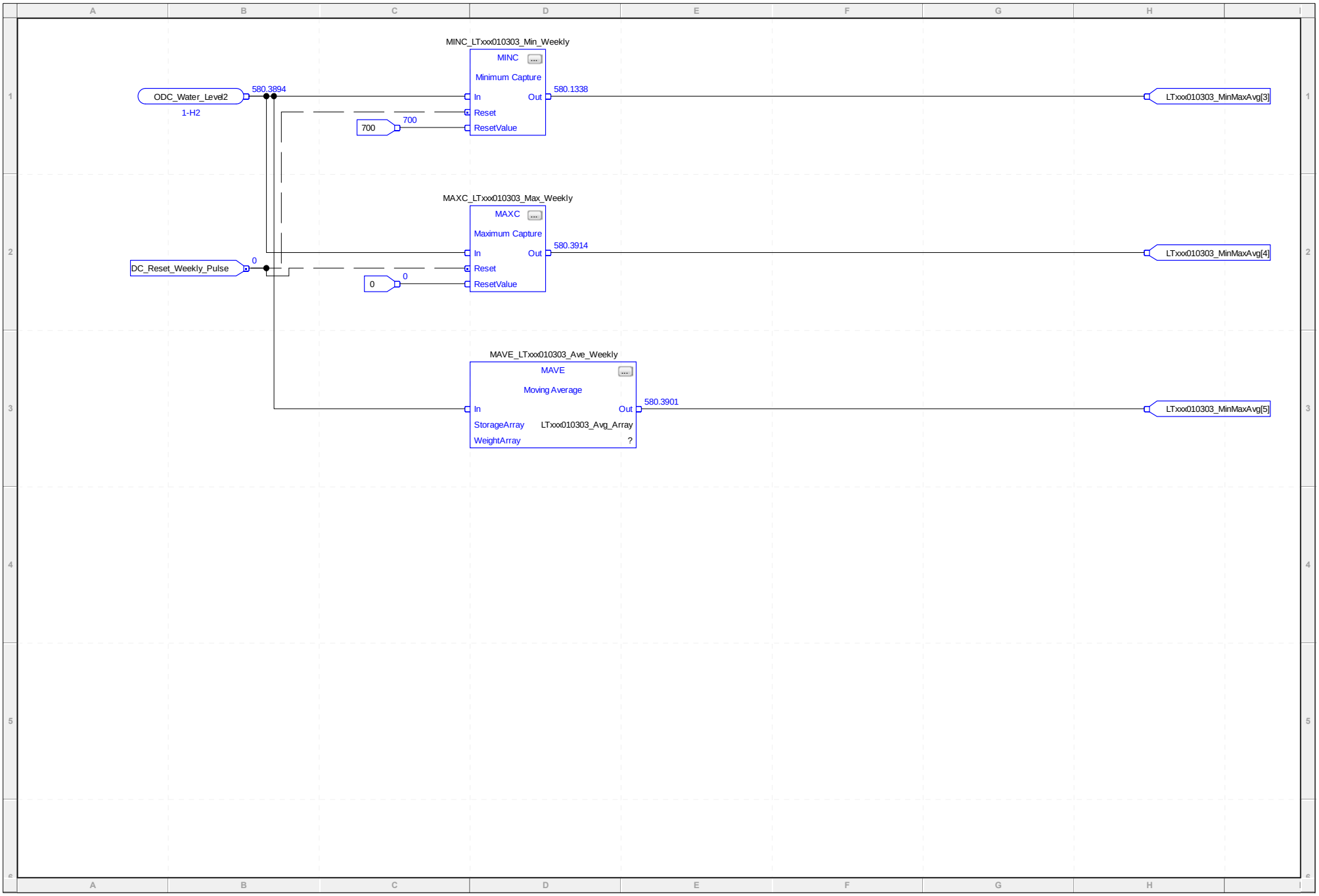
MINC_LTxxx010303_Min_Weekly
MINC
Minimum Capture
ODC_Water_Level2
1-H2
580.3894
In
Out
580.1338
Reset
700
700
ResetValue
LTxxx010303_MinMaxAvg[3]
MAXC_LTxxx010303_Max_Weekly
MAXC
Maximum Capture
DC_Reset_Weekly_Pulse
0
In
Out
580.3914
Reset
0
0
ResetValue
LTxxx010303_MinMaxAvg[4]
MAVE_LTxxx010303_Ave_Weekly
MAVE
Moving Average
In
Out
580.3901
StorageArray
LTxxx010303_Avg_Array
WeightArray
?
LTxxx010303_MinMaxAvg[5]

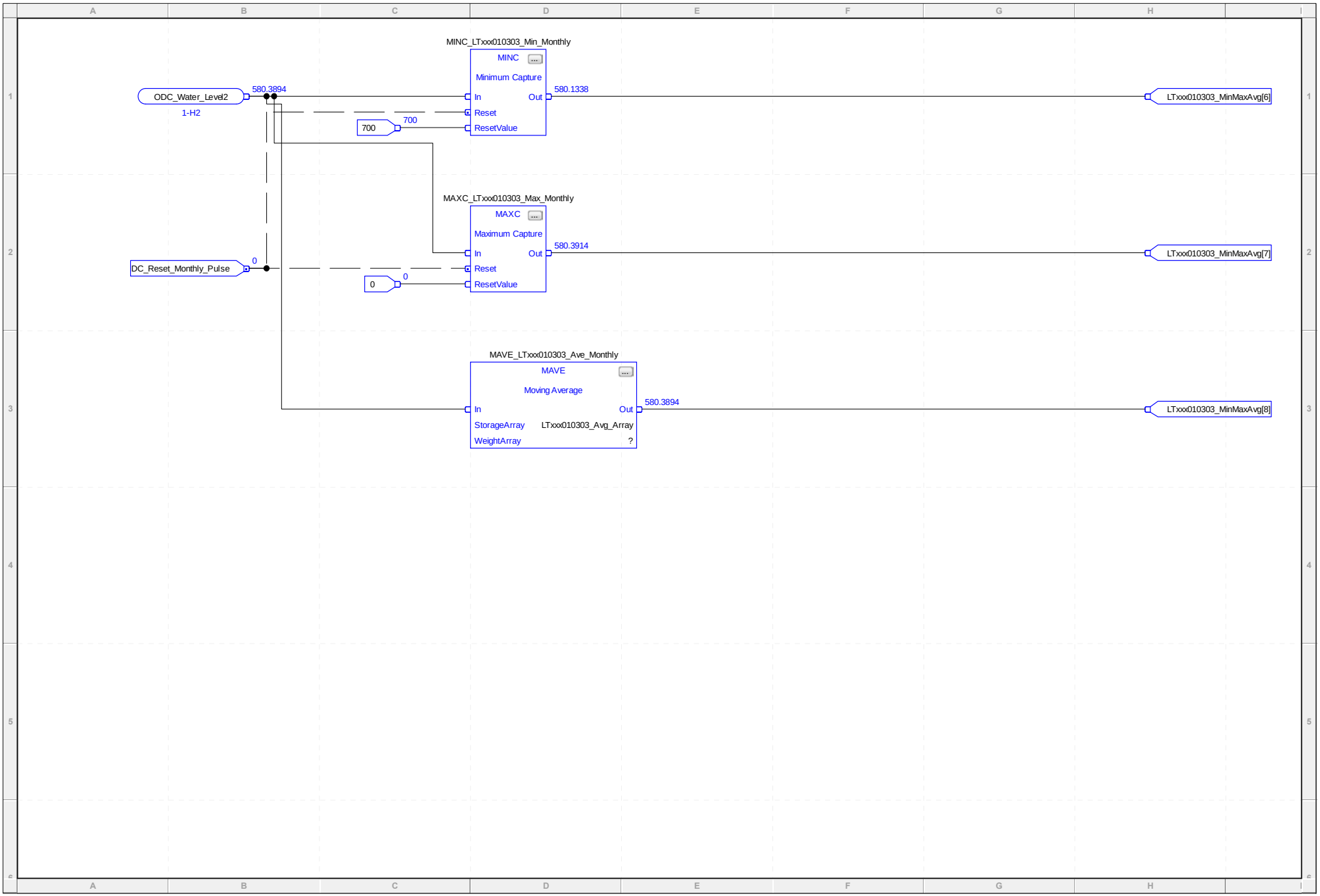
MINC_LTxxx010303_Min_Monthly
MINC
Minimum Capture
ODC_Water_Level2
1-H2
580.3894
In
Out
580.1338
Reset
700
700
ResetValue
LTxxx010303_MinMaxAvg[6]
MAXC_LTxxx010303_Max_Monthly
MAXC
Maximum Capture
DC_Reset_Monthly_Pulse
0
In
Out
580.3914
Reset
0
0
ResetValue
LTxxx010303_MinMaxAvg[7]
MAVE_LTxxx010303_Ave_Monthly
MAVE
Moving Average
In
Out
580.3894
StorageArray
LTxxx010303_Avg_Array
WeightArray
?
LTxxx010303_MinMaxAvg[8]

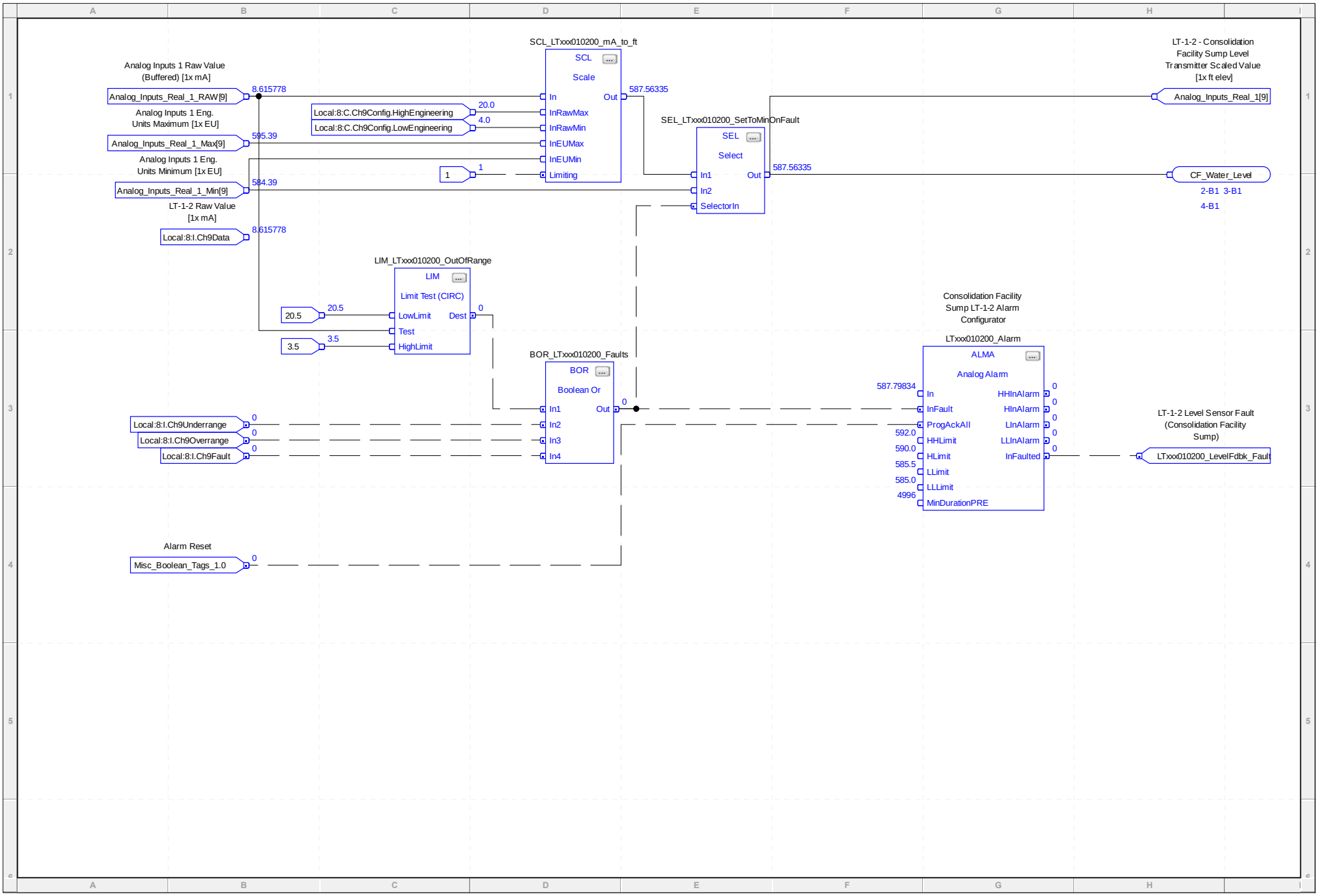
Analog Inputs 1 Raw Value (Buffered) [1x mA]
Analog_Inputs_Real_1_RAW[9]
8.615778
Analog Inputs 1 Eng. Units Maximum [1x EU]
Analog_Inputs_Real_1_Max[9]
595.39
Analog Inputs 1 Eng. Units Minimum [1x EU]
Analog_Inputs_Real_1_Min[9]
584.39
LT-1-2 Raw Value [1x mA]
Local:8:I.Ch9Data
8.615778
SCL_LTxxx010200_mA_to_ft
SCL
Scale
Local:8:C.Ch9Config.HighEngineering
20.0
Local:8:C.Ch9Config.LowEngineering
4.0
1
1
In
InRawMax
InRawMin
InEUMax
InEUMin
Limiting
Out
587.56335
SEL_LTxxx010200_SetToMinOnFault
SEL
Select
In1
In2
SelectorIn
Out
587.56335
LT-1-2 - Consolidation Facility Sump Level Transmitter Scaled Value [1x ft elev]
Analog_Inputs_Real_1[9]
CF_Water_Level
2-B1 3-B1
4-B1
LIM_LTxxx010200_OutOfRange
LIM
Limit Test (CIRC)
20.5
20.5
3.5
3.5
LowLimit
Test
HighLimit
Dest
0
BOR_LTxxx010200_Faults
BOR
Boolean Or
Local:8:I.Ch9Underrange
Local:8:I.Ch9Overrange
Local:8:I.Ch9Fault
0
0
0
In1
In2
In3
In4
Out
0
Consolidation Facility Sump LT-1-2 Alarm Configurator
LTxxx010200_Alarm
ALMA
Analog Alarm
587.79834
In
InFault
ProgAckAll
592.0
HHLimit
590.0
HLimit
585.5
LLimit
585.0
LLLimit
4996
MinDurationPRE
HHInAlarm
HInAlarm
LInAlarm
LLInAlarm
InFaulted
0
0
0
0
0
LT-1-2 Level Sensor Fault (Consolidation Facility Sump)
LTxxx010200_LevelFdbk_Fault
Alarm Reset
Misc_Boolean_Tags_1.0
0

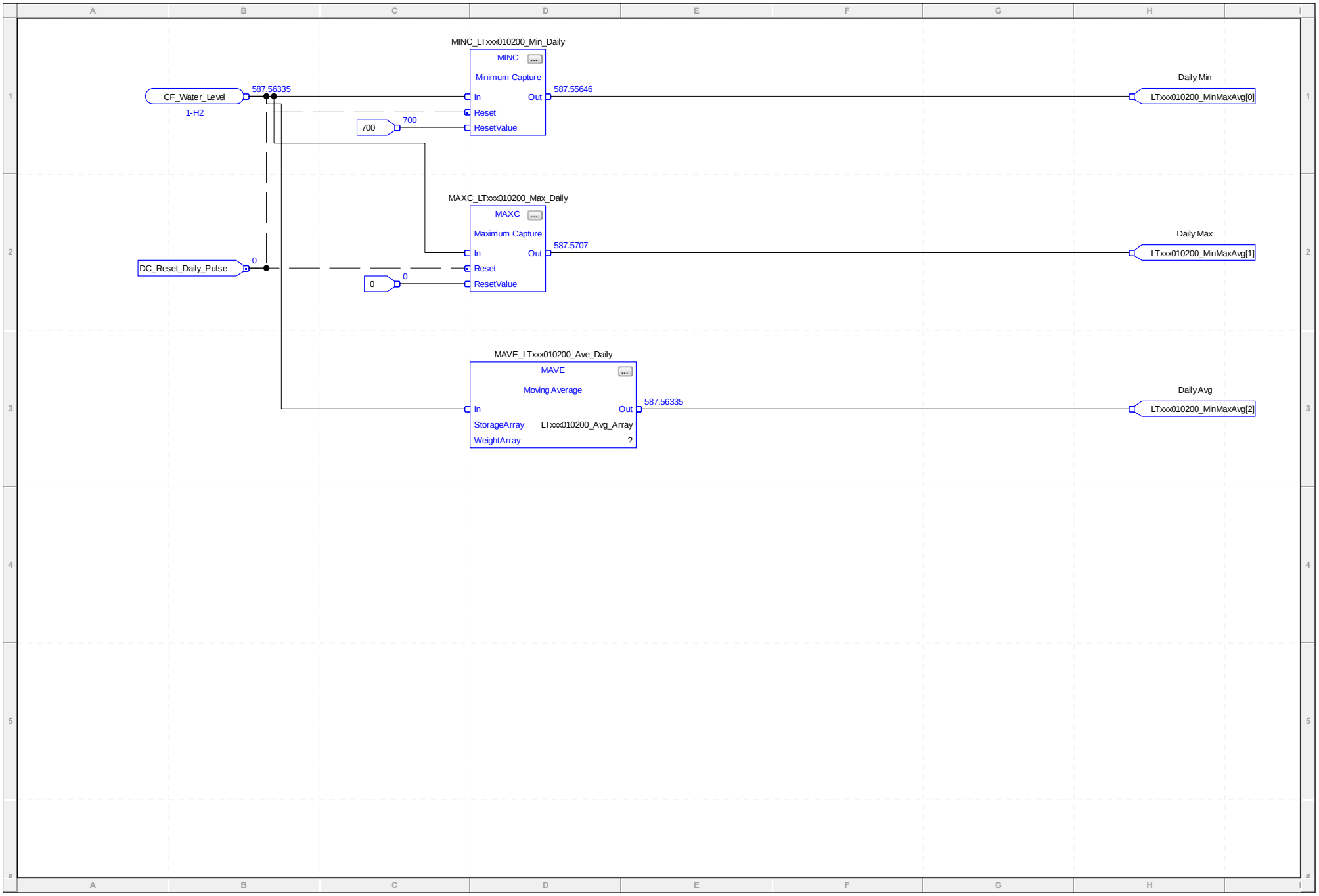
MINC_LTxxx010200_Min_Daily
MINC
Minimum Capture
CF_Water_Level
1-H2
587.56335
In
Out
587.55646
Reset
700
700
ResetValue
Daily Min
LTxxx010200_MinMaxAvg[0]
MAXC_LTxxx010200_Max_Daily
MAXC
Maximum Capture
DC_Reset_Daily_Pulse
0
In
Out
587.5707
Reset
0
0
ResetValue
Daily Max
LTxxx010200_MinMaxAvg[1]
MAVE_LTxxx010200_Ave_Daily
MAVE
Moving Average
In
Out
587.56335
StorageArray
LTxxx010200_Avg_Array
WeightArray
?
Daily Avg
LTxxx010200_MinMaxAvg[2]

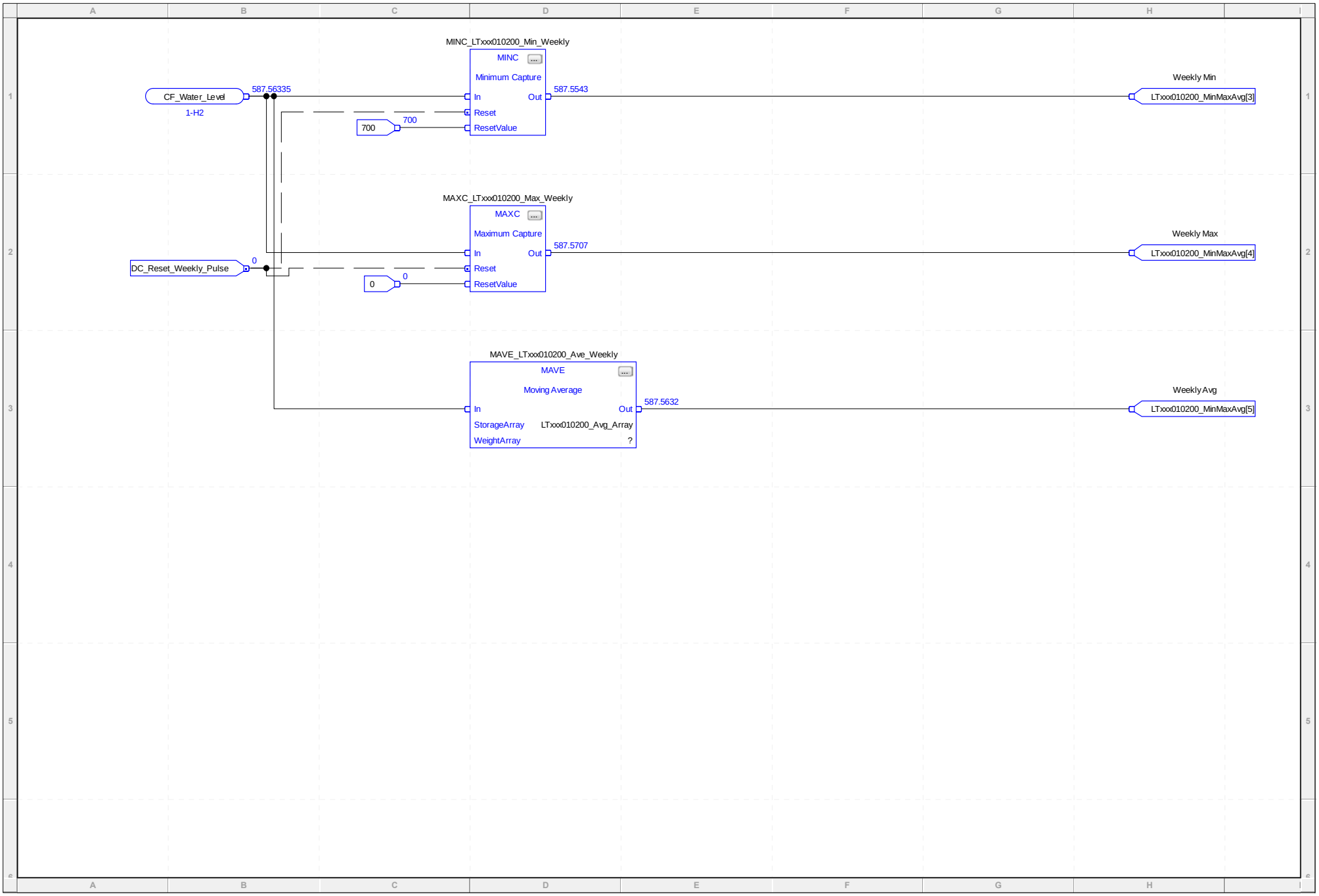
MINC_LTxxx010200_Min_Weekly
MINC
Minimum Capture
CF_Water_Level
1-H2
587.56335
In
Out
587.5543
Reset
700
700
ResetValue
Weekly Min
LTxxx010200_MinMaxAvg[3]
MAXC_LTxxx010200_Max_Weekly
MAXC
Maximum Capture
DC_Reset_Weekly_Pulse
0
In
Out
587.5707
Reset
0
0
ResetValue
Weekly Max
LTxxx010200_MinMaxAvg[4]
MAVE_LTxxx010200_Ave_Weekly
MAVE
Moving Average
In
Out
587.5632
StorageArray
LTxxx010200_Avg_Array
WeightArray
?
Weekly Avg
LTxxx010200_MinMaxAvg[5]

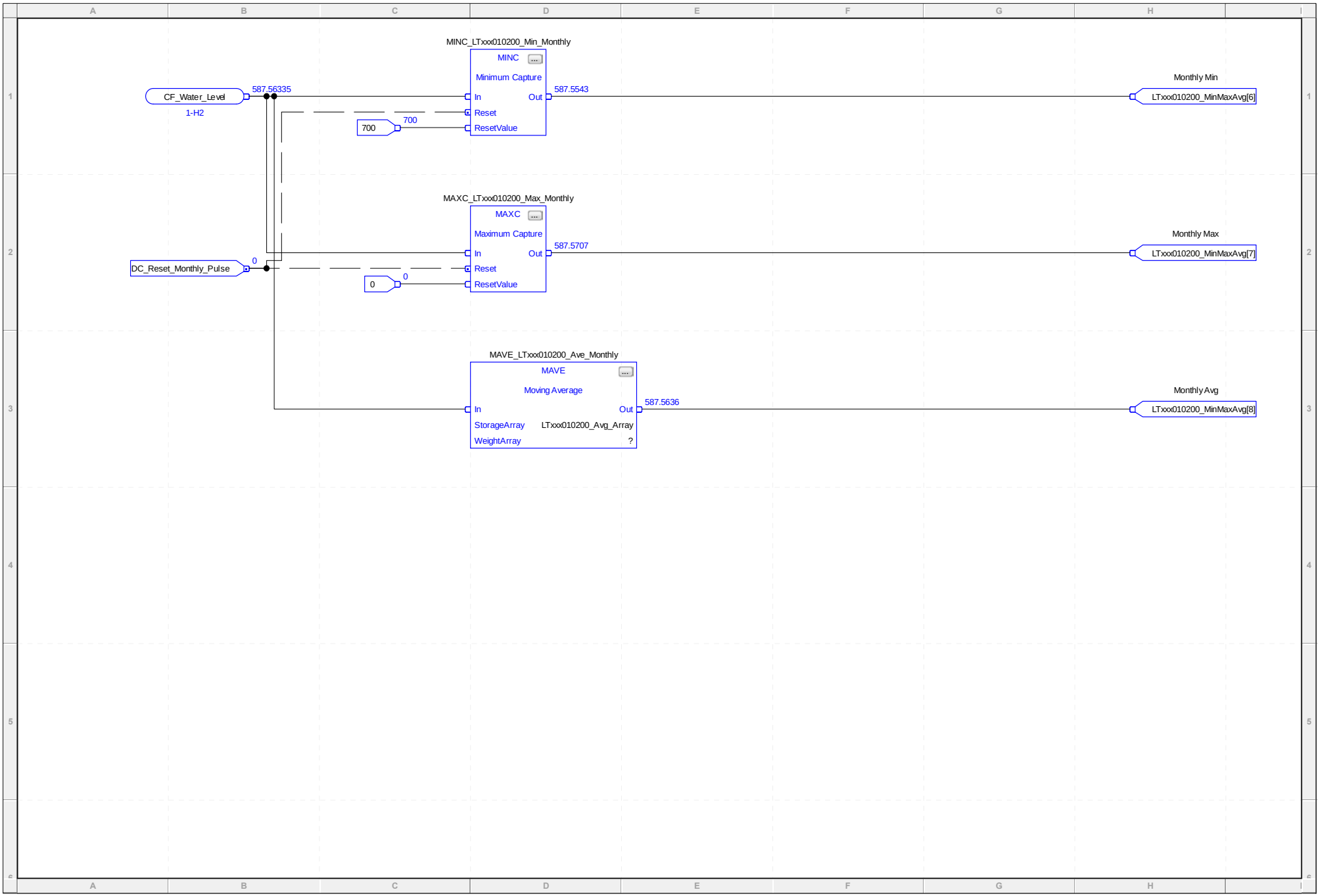
MINC_LTxxx010200_Min_Monthly
MINC
Minimum Capture
CF_Water_Level
1-H2
587.56335
In
Out
587.5543
Reset
700
700
ResetValue
Monthly Min
LTxxx010200_MinMaxAvg[6]
MAXC_LTxxx010200_Max_Monthly
MAXC
Maximum Capture
DC_Reset_Monthly_Pulse
0
In
Out
587.5707
Reset
0
0
ResetValue
Monthly Max
LTxxx010200_MinMaxAvg[7]
MAVE_LTxxx010200_Ave_Monthly
MAVE
Moving Average
In
Out
587.5636
StorageArray
LTxxx010200_Avg_Array
WeightArray
?
Monthly Avg
LTxxx010200_MinMaxAvg[8]

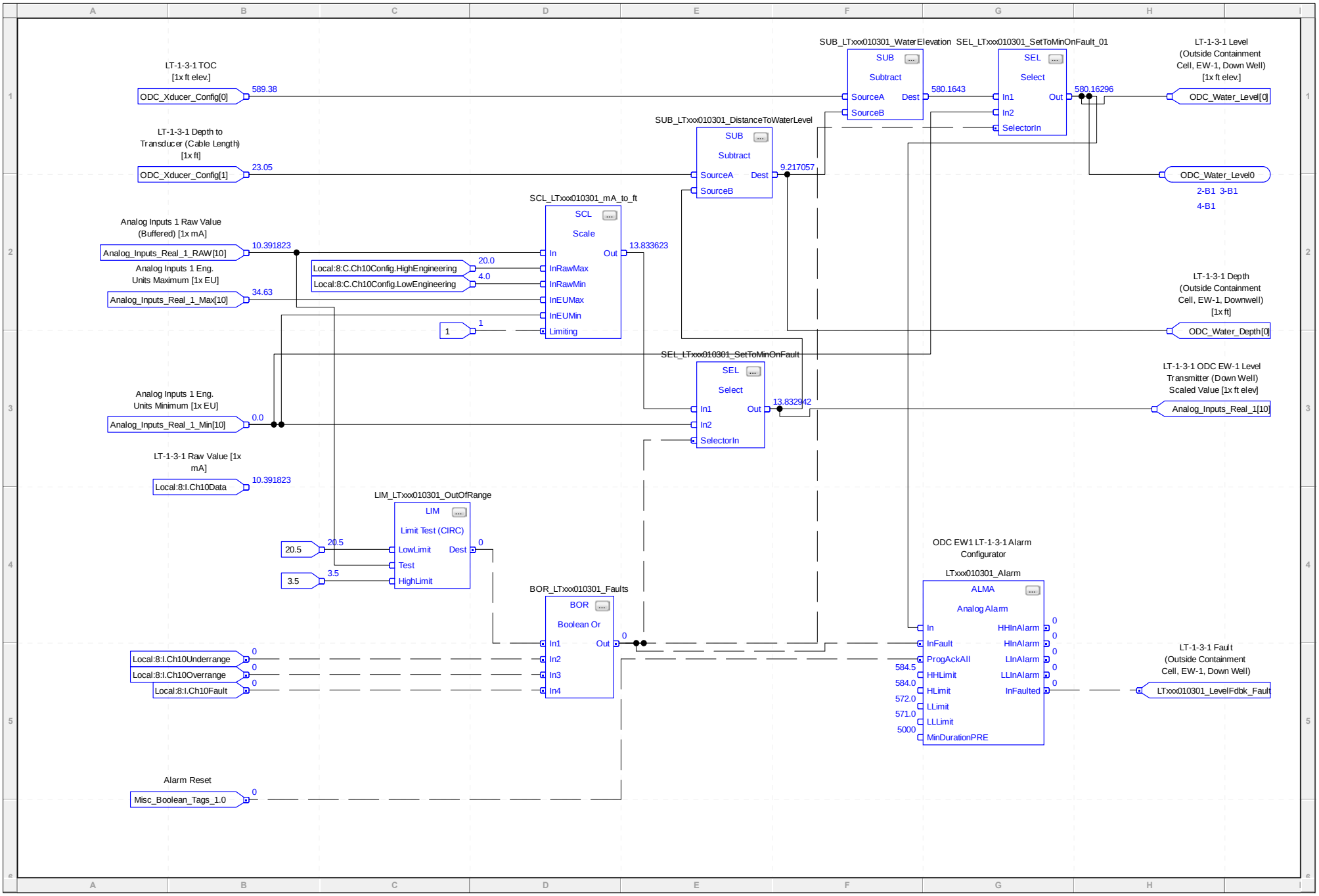
LT-1-3-1 TOC [1x ft elev.]
ODC_Xducer_Config[0]
589.38
LT-1-3-1 Depth to Transducer (Cable Length) [1x ft]
ODC_Xducer_Config[1]
23.05
Analog Inputs 1 Raw Value (Buffered) [1x mA]
Analog_Inputs_Real_1_RAW[10]
10.391823
Analog Inputs 1 Eng. Units Maximum [1x EU]
Analog_Inputs_Real_1_Max[10]
34.63
Analog Inputs 1 Eng. Units Minimum [1x EU]
Analog_Inputs_Real_1_Min[10]
0.0
LT-1-3-1 Raw Value [1x mA]
Local:8:I.Ch10Data
10.391823
SUB_LTxxx010301_WaterElevation
SUB
Subtract
SourceA
SourceB
Dest
580.1643
SEL_LTxxx010301_SetToMinOnFault_01
SEL
Select
In1
In2
SelectorIn
Out
580.16296
LT-1-3-1 Level (Outside Containment Cell, EW-1, Down Well) [1x ft elev.]
ODC_Water_Level[0]
SUB_LTxxx010301_DistanceToWaterLevel
SUB
Subtract
SourceA
SourceB
Dest
9.217057
ODC_Water_Level0
2-B1 3-B1
4-B1
SCL_LTxxx010301_mA_to_ft
SCL
Scale
In
InRawMax
InRawMin
InEUMax
InEUMin
Limiting
Out
13.833623
Local:8:C.Ch10Config.HighEngineering
20.0
Local:8:C.Ch10Config.LowEngineering
4.0
1
1
LT-1-3-1 Depth (Outside Containment Cell, EW-1, Downwell) [1x ft]
ODC_Water_Depth[0]
SEL_LTxxx010301_SetToMinOnFault
SEL
Select
In1
In2
SelectorIn
Out
13.832942
LT-1-3-1 ODC EW-1 Level Transmitter (Down Well) Scaled Value [1x ft elev]
Analog_Inputs_Real_1[10]
LIM_LTxxx010301_OutOfRange
LIM
Limit Test (CIRC)
LowLimit
Test
HighLimit
Dest
20.5
20.5
3.5
3.5
0
BOR_LTxxx010301_Faults
BOR
Boolean Or
In1
In2
In3
In4
Out
0
Local:8:I.Ch10Underrange
Local:8:I.Ch10Overrange
Local:8:I.Ch10Fault
0
0
0
ODC EW1 LT-1-3-1 Alarm Configurator
LTxxx010301_Alarm
ALMA
Analog Alarm
In
InFault
ProgAckAll
HHLimit
HLimit
LLimit
LLLimit
MinDurationPRE
HHInAlarm
HInAlarm
LInAlarm
LLInAlarm
InFaulted
584.5
584.0
572.0
571.0
5000
LT-1-3-1 Fault (Outside Containment Cell, EW-1, Down Well)
LTxxx010301_LevelFdbk_Fault
Alarm Reset
Misc_Boolean_Tags_1.0
0

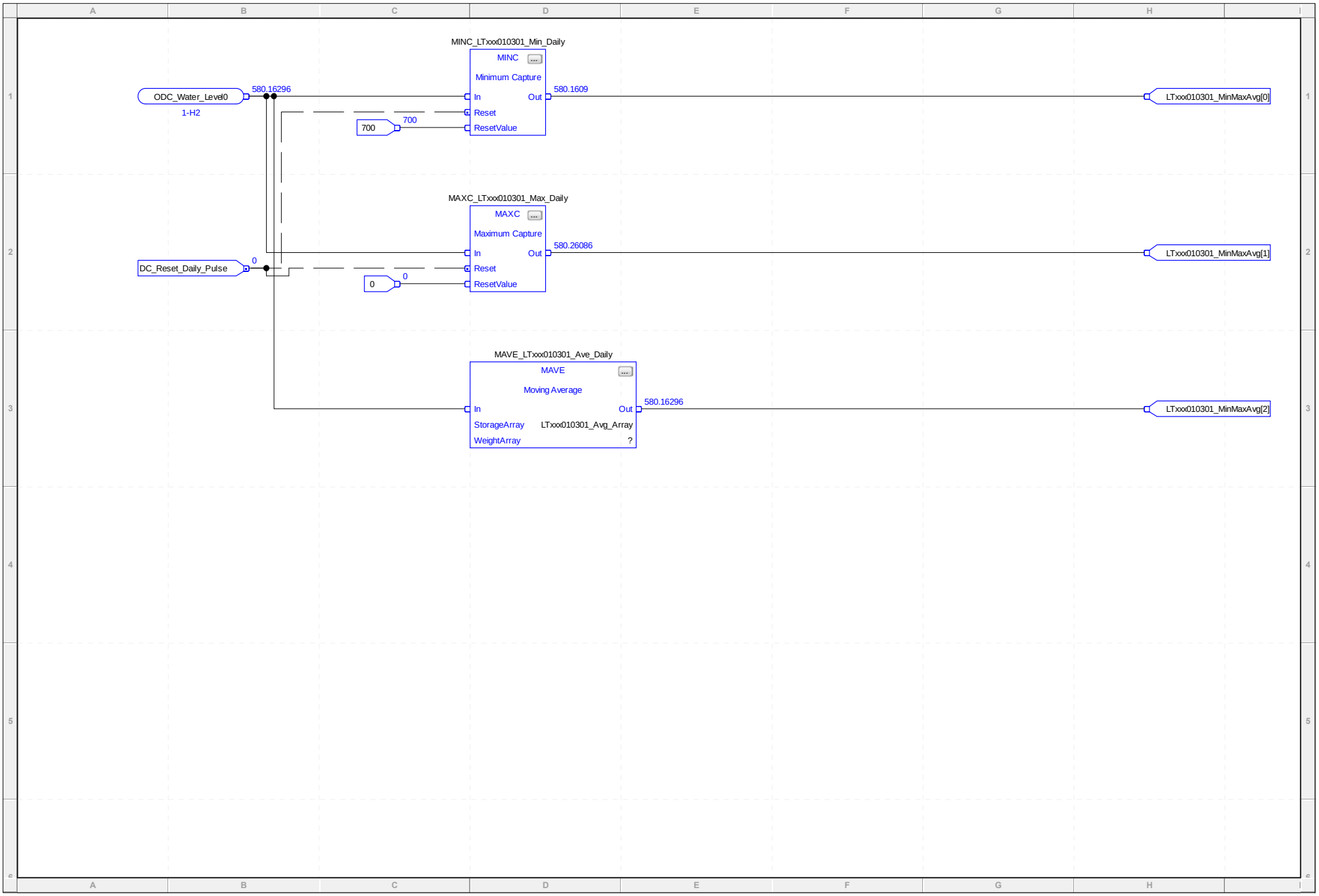
MINC_LTxxx010301_Min_Daily
MINC
Minimum Capture
ODC_Water_Level0
1-H2
580.16296
In
Out
580.1609
Reset
700
700
ResetValue
LTxxx010301_MinMaxAvg[0]
MAXC_LTxxx010301_Max_Daily
MAXC
Maximum Capture
DC_Reset_Daily_Pulse
0
In
Out
580.26086
Reset
0
0
ResetValue
LTxxx010301_MinMaxAvg[1]
MAVE_LTxxx010301_Ave_Daily
MAVE
Moving Average
In
Out
580.16296
StorageArray
LTxxx010301_Avg_Array
WeightArray
?
LTxxx010301_MinMaxAvg[2]

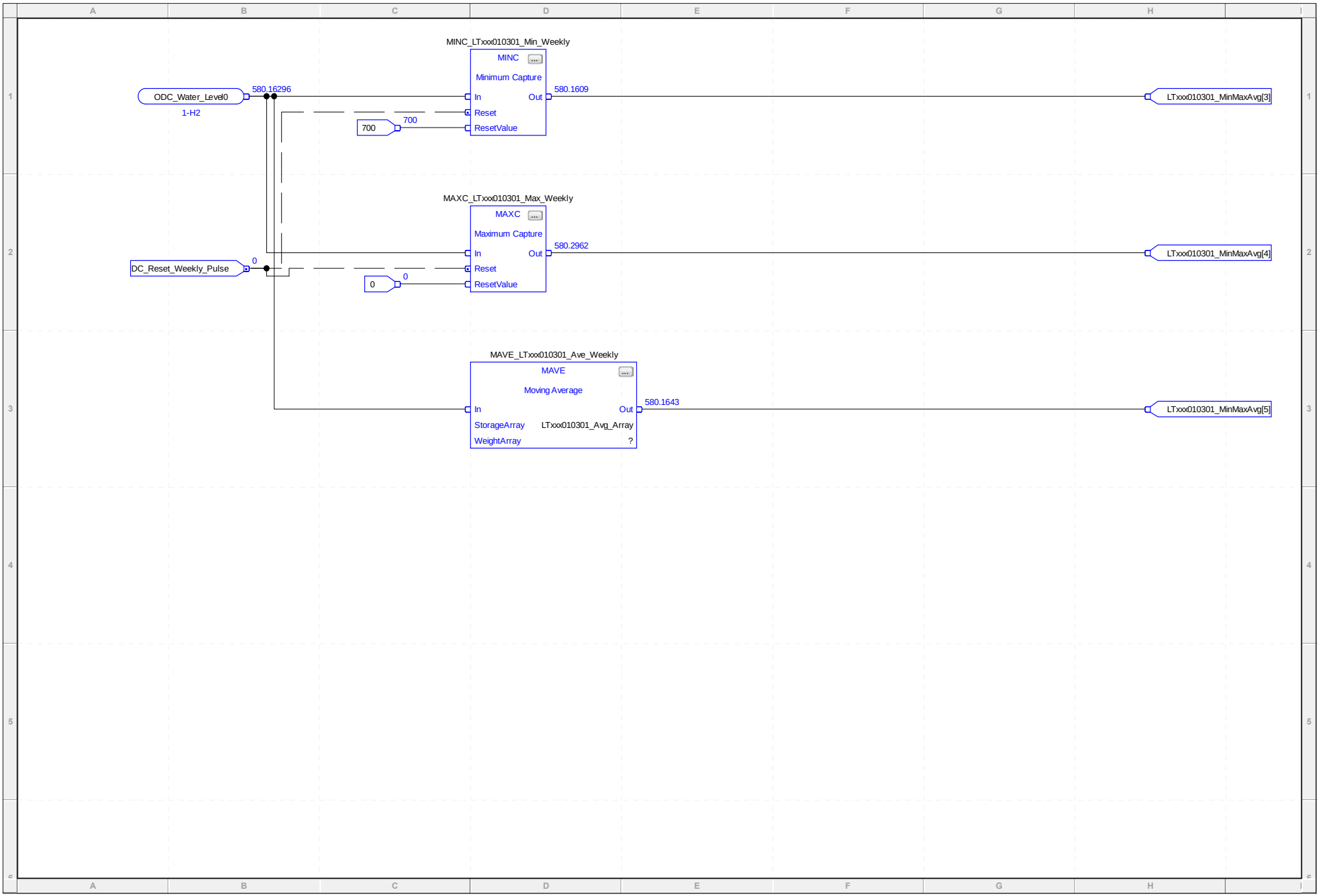
MINC_LTxxx010301_Min_Weekly
MINC
Minimum Capture
ODC_Water_Level0
1-H2
580.16296
In
Out
580.1609
Reset
700
700
ResetValue
LTxxx010301_MinMaxAvg[3]
MAXC_LTxxx010301_Max_Weekly
MAXC
Maximum Capture
DC_Reset_Weekly_Pulse
0
In
Out
580.2962
Reset
0
0
ResetValue
LTxxx010301_MinMaxAvg[4]
MAVE_LTxxx010301_Ave_Weekly
MAVE
Moving Average
In
Out
580.1643
StorageArray
LTxxx010301_Avg_Array
WeightArray
?
LTxxx010301_MinMaxAvg[5]

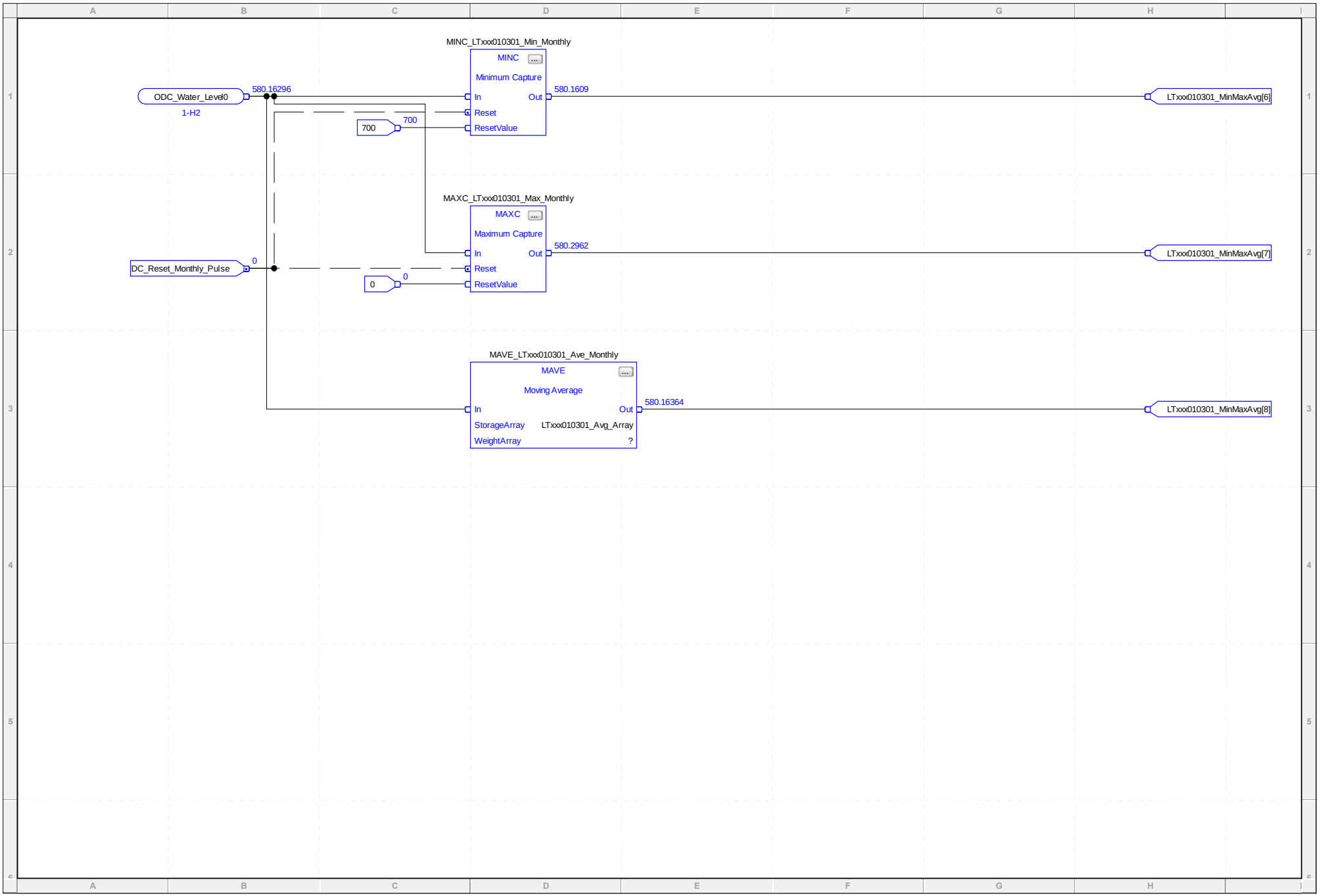
MINC_LTxxx010301_Min_Monthly
MINC
Minimum Capture
ODC_Water_Level0
1-H2
580.16296
In
Out
580.1609
Reset
700
700
ResetValue
LTxxx010301_MinMaxAvg[6]
MAXC_LTxxx010301_Max_Monthly
MAXC
Maximum Capture
In
Out
580.2962
DC_Reset_Monthly_Pulse
0
Reset
0
0
ResetValue
LTxxx010301_MinMaxAvg[7]
MAVE_LTxxx010301_Ave_Monthly
MAVE
Moving Average
In
Out
580.16364
StorageArray
LTxxx010301_Avg_Array
WeightArray
?
LTxxx010301_MinMaxAvg[8]

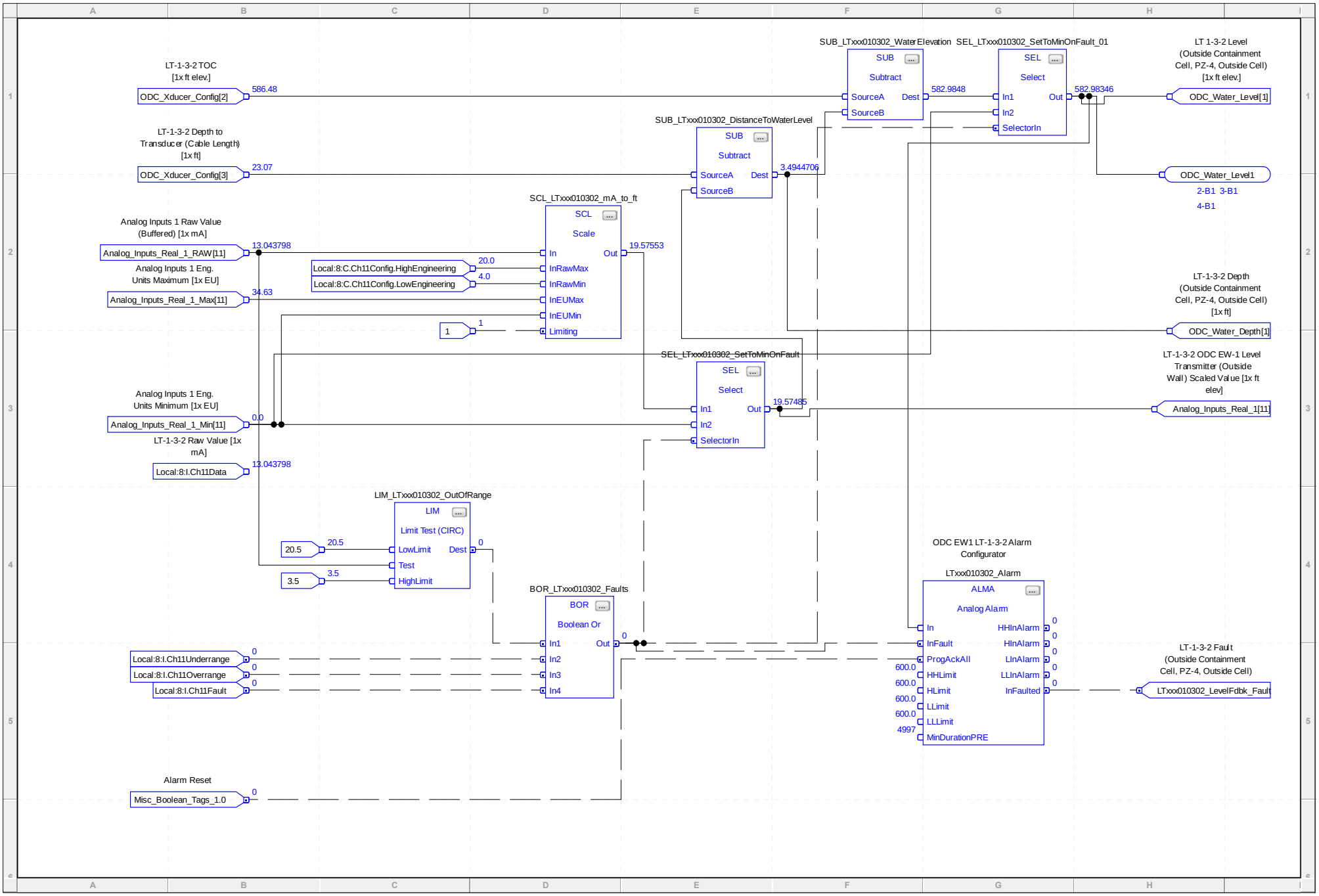
LT-1-3-2 TOC [1x ft elev.]
ODC_Xducer_Config[2]
586.48
LT-1-3-2 Depth to Transducer (Cable Length) [1x ft]
ODC_Xducer_Config[3]
23.07
Analog Inputs 1 Raw Value (Buffered) [1x mA]
Analog_Inputs_Real_1_RAW[11]
13.043798
Analog Inputs 1 Eng. Units Maximum [1x EU]
Analog_Inputs_Real_1_Max[11]
34.63
Analog Inputs 1 Eng. Units Minimum [1x EU]
Analog_Inputs_Real_1_Min[11]
0.0
LT-1-3-2 Raw Value [1x mA]
Local:8:I.Ch11Data
13.043798
SCL_LTxxx010302_mA_to_ft
SCL
Scale
In
Out
19.57553
InRawMax
InRawMin
InEUMax
InEUMin
Limiting
Local:8:C.Ch11Config.HighEngineering
20.0
Local:8:C.Ch11Config.LowEngineering
4.0
1
1
SUB_LTxxx010302_WaterElevation
SUB
Subtract
SourceA
SourceB
Dest
582.9848
SEL_LTxxx010302_SetToMinOnFault_01
SEL
Select
In1
In2
SelectorIn
Out
582.98346
LT 1-3-2 Level (Outside Containment Cell, PZ-4, Outside Cell) [1x ft elev.]
ODC_Water_Level[1]
SUB_LTxxx010302_DistanceToWaterLevel
3.4944706
ODC_Water_Level1
2-B1 3-B1
4-B1
LT-1-3-2 Depth (Outside Containment Cell, PZ-4, Outside Cell) [1x ft]
ODC_Water_Depth[1]
SEL_LTxxx010302_SetToMinOnFault
19.57485
LT-1-3-2 ODC EW-1 Level Transmitter (Outside Wall) Scaled Value [1x ft elev]
Analog_Inputs_Real_1[11]
LIM_LTxxx010302_OutOfRange
LIM
Limit Test (CIRC)
LowLimit
Test
HighLimit
Dest
20.5
20.5
3.5
3.5
0
BOR_LTxxx010302_Faults
BOR
Boolean Or
In1
In2
In3
In4
Out
Local:8:I.Ch11Underrange
Local:8:I.Ch11Overrange
Local:8:I.Ch11Fault
ODC EW1 LT-1-3-2 Alarm Configurator
LTxxx010302_Alarm
ALMA
Analog Alarm
In
InFault
ProgAckAll
HHLimit
HLimit
LLimit
LLLimit
MinDurationPRE
600.0
600.0
600.0
600.0
4997
HHInAlarm
HInAlarm
LInAlarm
LLInAlarm
InFaulted
LT-1-3-2 Fault (Outside Containment Cell, PZ-4, Outside Cell)
LTxxx010302_LevelFdbk_Fault
Alarm Reset
Misc_Boolean_Tags_1.0

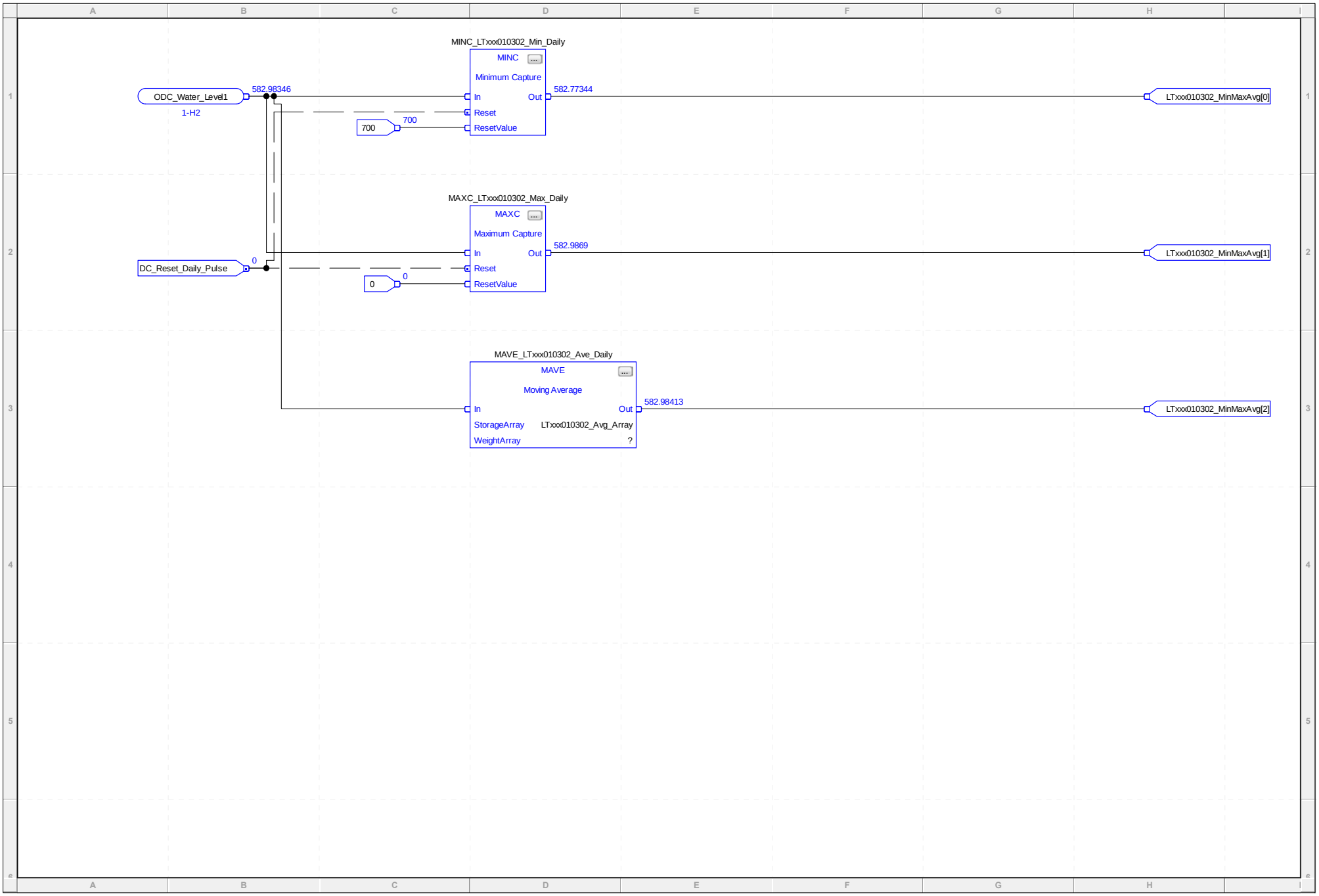
MINC_LTxxx010302_Min_Daily
MINC
Minimum Capture
ODC_Water_Level1
1-H2
582.98346
In
Out
582.77344
Reset
700
700
ResetValue
LTxxx010302_MinMaxAvg[0]
MAXC_LTxxx010302_Max_Daily
MAXC
Maximum Capture
DC_Reset_Daily_Pulse
0
In
Out
582.9869
Reset
0
0
ResetValue
LTxxx010302_MinMaxAvg[1]
MAVE_LTxxx010302_Ave_Daily
MAVE
Moving Average
In
Out
582.98413
StorageArray
LTxxx010302_Avg_Array
WeightArray
?
LTxxx010302_MinMaxAvg[2]

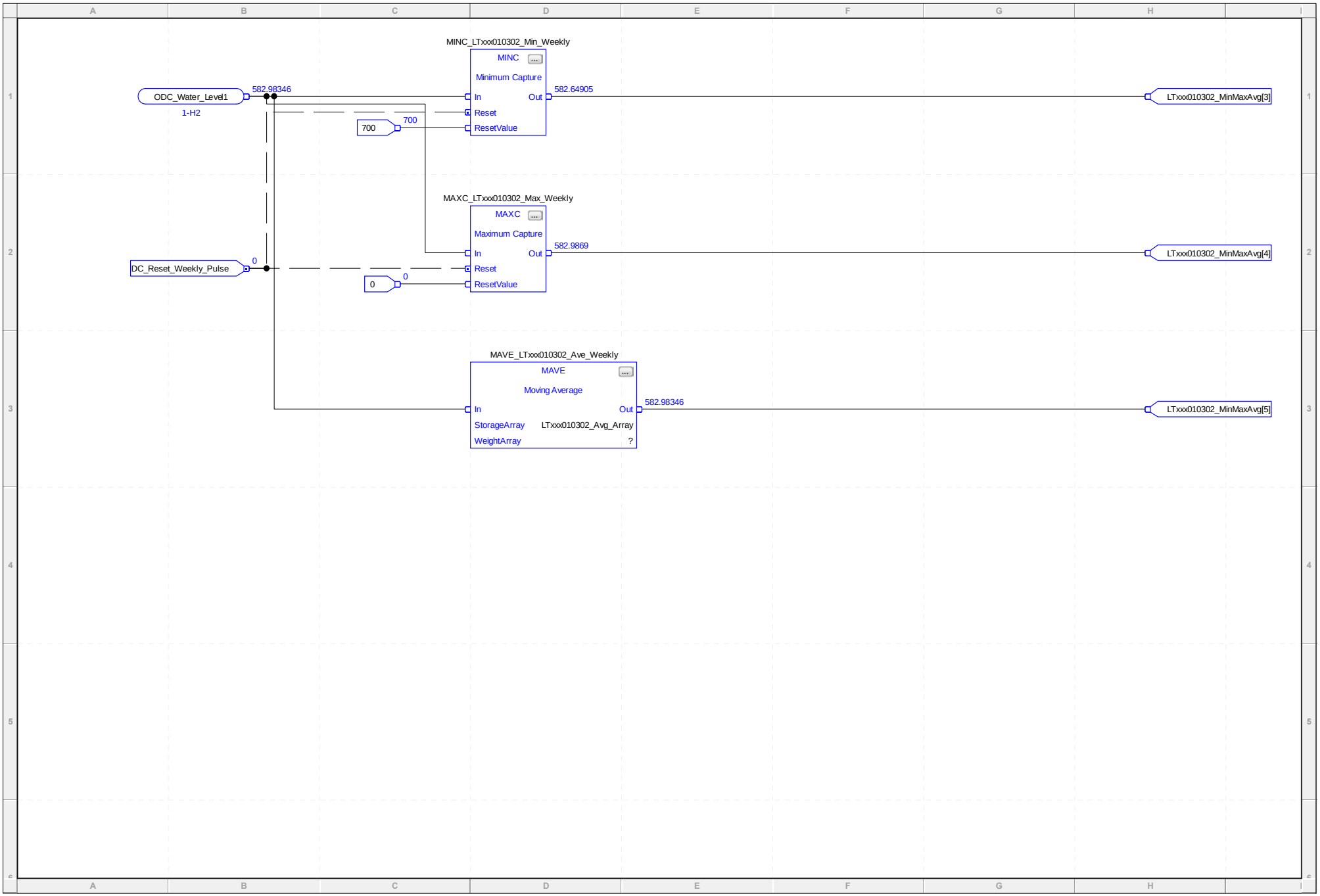
MINC_LTxxx010302_Min_Weekly
MINC
Minimum Capture
ODC_Water_Level1
1-H2
582.98346
In
Out
582.64905
Reset
700
700
ResetValue
LTxxx010302_MinMaxAvg[3]
MAXC_LTxxx010302_Max_Weekly
MAXC
Maximum Capture
DC_Reset_Weekly_Pulse
0
In
Out
582.9869
Reset
0
0
ResetValue
LTxxx010302_MinMaxAvg[4]
MAVE_LTxxx010302_Ave_Weekly
MAVE
Moving Average
In
Out
582.98346
StorageArray
LTxxx010302_Avg_Array
WeightArray
?
LTxxx010302_MinMaxAvg[5]

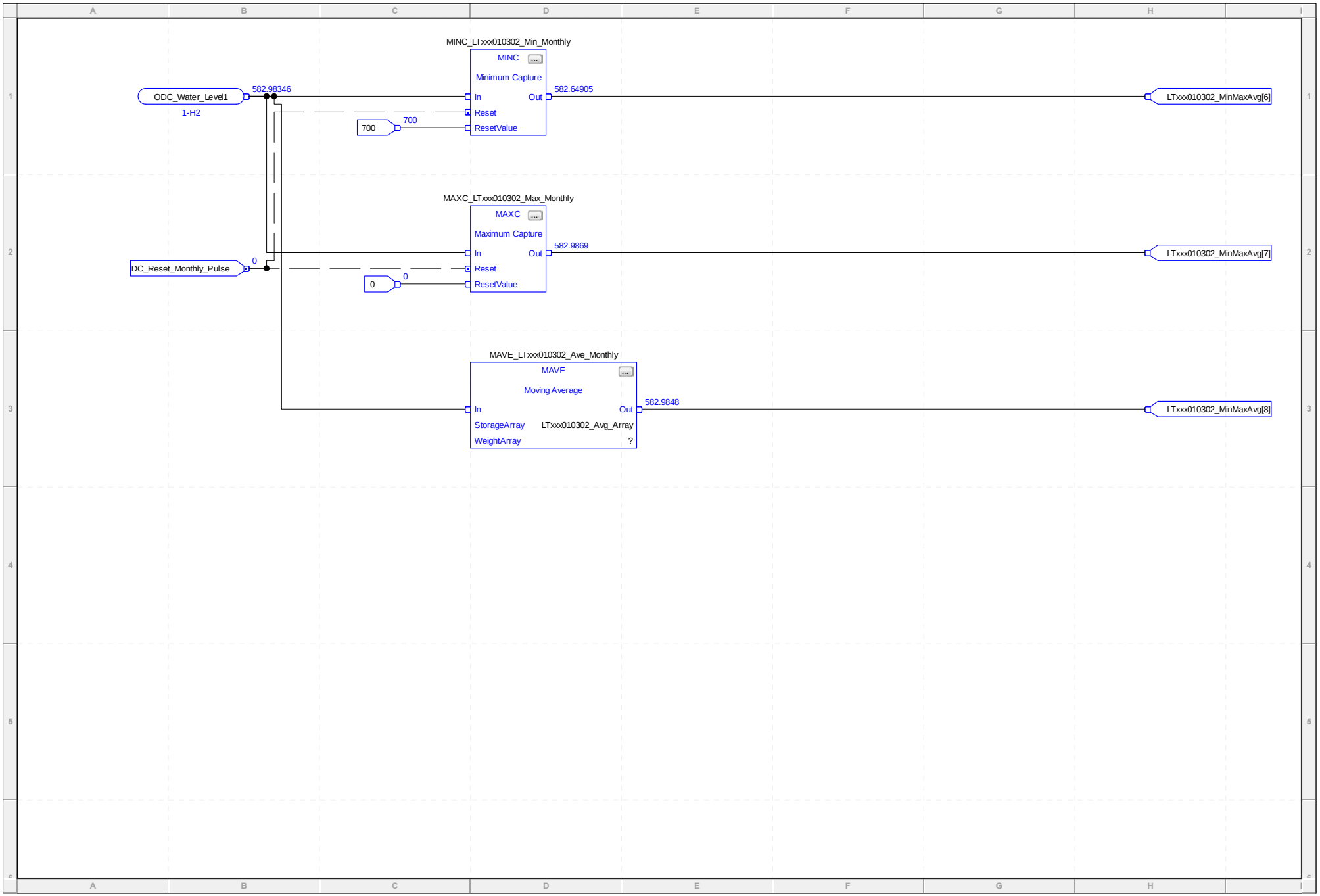
MINC_LTxxx010302_Min_Monthly
MINC
Minimum Capture
ODC_Water_Level1
1-H2
582.98346
In
Out
582.64905
Reset
700
700
ResetValue
LTxxx010302_MinMaxAvg[6]
MAXC_LTxxx010302_Max_Monthly
MAXC
Maximum Capture
DC_Reset_Monthly_Pulse
0
In
Out
582.9869
Reset
0
0
ResetValue
LTxxx010302_MinMaxAvg[7]
MAVE_LTxxx010302_Ave_Monthly
MAVE
Moving Average
In
Out
582.9848
StorageArray
LTxxx010302_Avg_Array
WeightArray
?
LTxxx010302_MinMaxAvg[8]

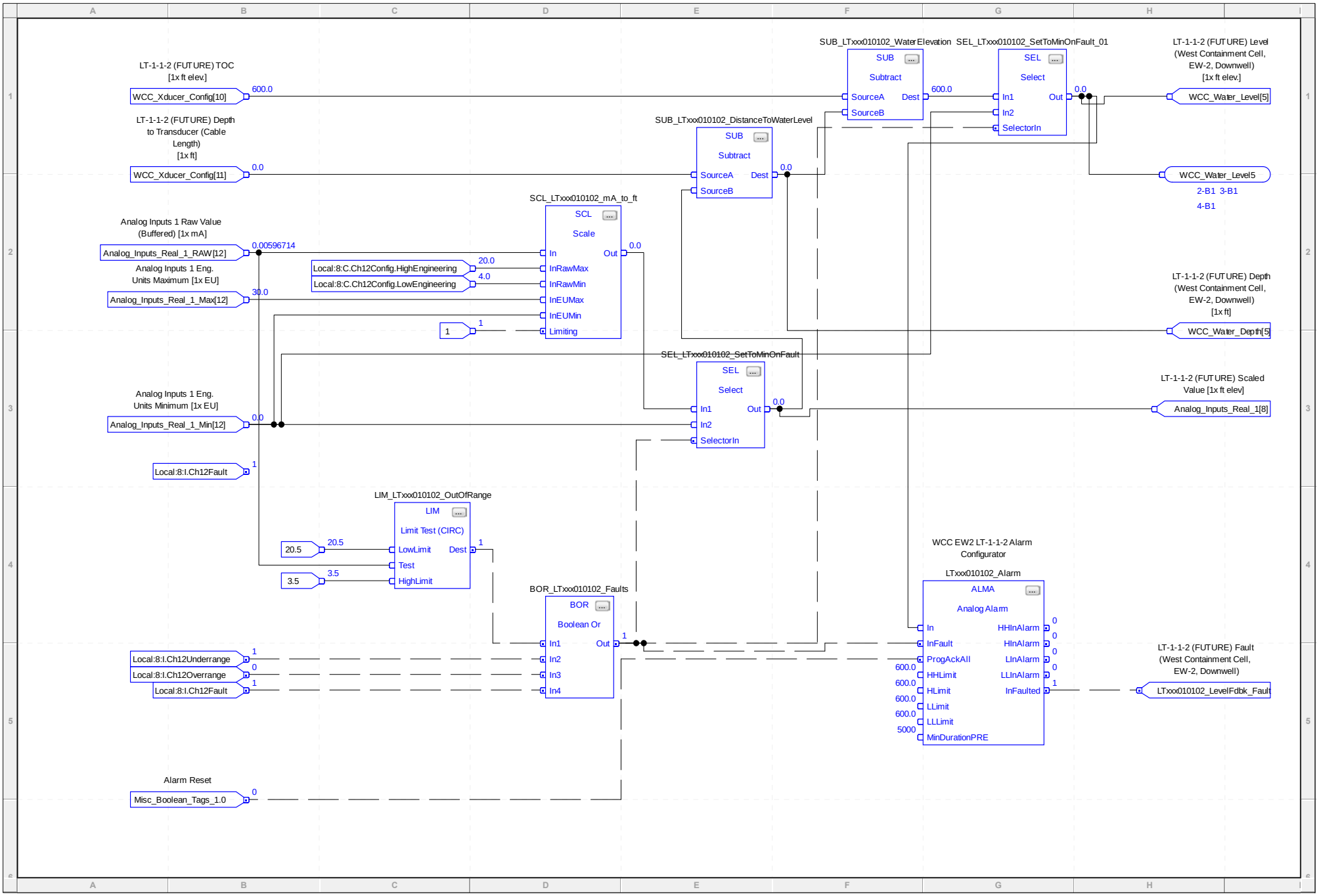
LT-1-1-2 (FUTURE) TOC [1x ft elev.]
WCC_Xducer_Config[10]
600.0
LT-1-1-2 (FUTURE) Depth to Transducer (Cable Length) [1x ft]
WCC_Xducer_Config[11]
0.0
Analog Inputs 1 Raw Value (Buffered) [1x mA]
Analog_Inputs_Real_1_RAW[12]
0.00596714
Analog Inputs 1 Eng. Units Maximum [1x EU]
Analog_Inputs_Real_1_Max[12]
30.0
Analog Inputs 1 Eng. Units Minimum [1x EU]
Analog_Inputs_Real_1_Min[12]
0.0
Local:8:I.Ch12Fault
1
SCL_LTxxx010102_mA_to_ft
SCL
Scale
In
Out
InRawMax
InRawMin
InEUMax
InEUMin
Limiting
Local:8:C.Ch12Config.HighEngineering
20.0
Local:8:C.Ch12Config.LowEngineering
4.0
SUB_LTxxx010102_WaterElevation
SUB
Subtract
SourceA
SourceB
Dest
SUB_LTxxx010102_DistanceToWaterLevel
SEL_LTxxx010102_SetToMinOnFault_01
SEL
Select
In1
In2
SelectorIn
SEL_LTxxx010102_SetToMinOnFault
LIM_LTxxx010102_OutOfRange
LIM
Limit Test (CIRC)
LowLimit
Test
HighLimit
20.5
3.5
BOR_LTxxx010102_Faults
BOR
Boolean Or
Local:8:I.Ch12Underrange
Local:8:I.Ch12Overrange
Alarm Reset
Misc_Boolean_Tags_1.0
WCC EW2 LT-1-1-2 Alarm Configurator
LTxxx010102_Alarm
ALMA
Analog Alarm
InFault
ProgAckAll
HHLimit
HLimit
LLimit
LLLimit
MinDurationPRE
HHInAlarm
HInAlarm
LInAlarm
LLInAlarm
InFaulted
5000
LT-1-1-2 (FUTURE) Level (West Containment Cell, EW-2, Downwell) [1x ft elev.]
WCC_Water_Level[5]
WCC_Water_Level5
2-B1 3-B1
4-B1
LT-1-1-2 (FUTURE) Depth (West Containment Cell, EW-2, Downwell) [1x ft]
WCC_Water_Depth[5]
LT-1-1-2 (FUTURE) Scaled Value [1x ft elev]
Analog_Inputs_Real_1[8]
LT-1-1-2 (FUTURE) Fault (West Containment Cell, EW-2, Downwell)
LTxxx010102_LevelFdbk_Fault

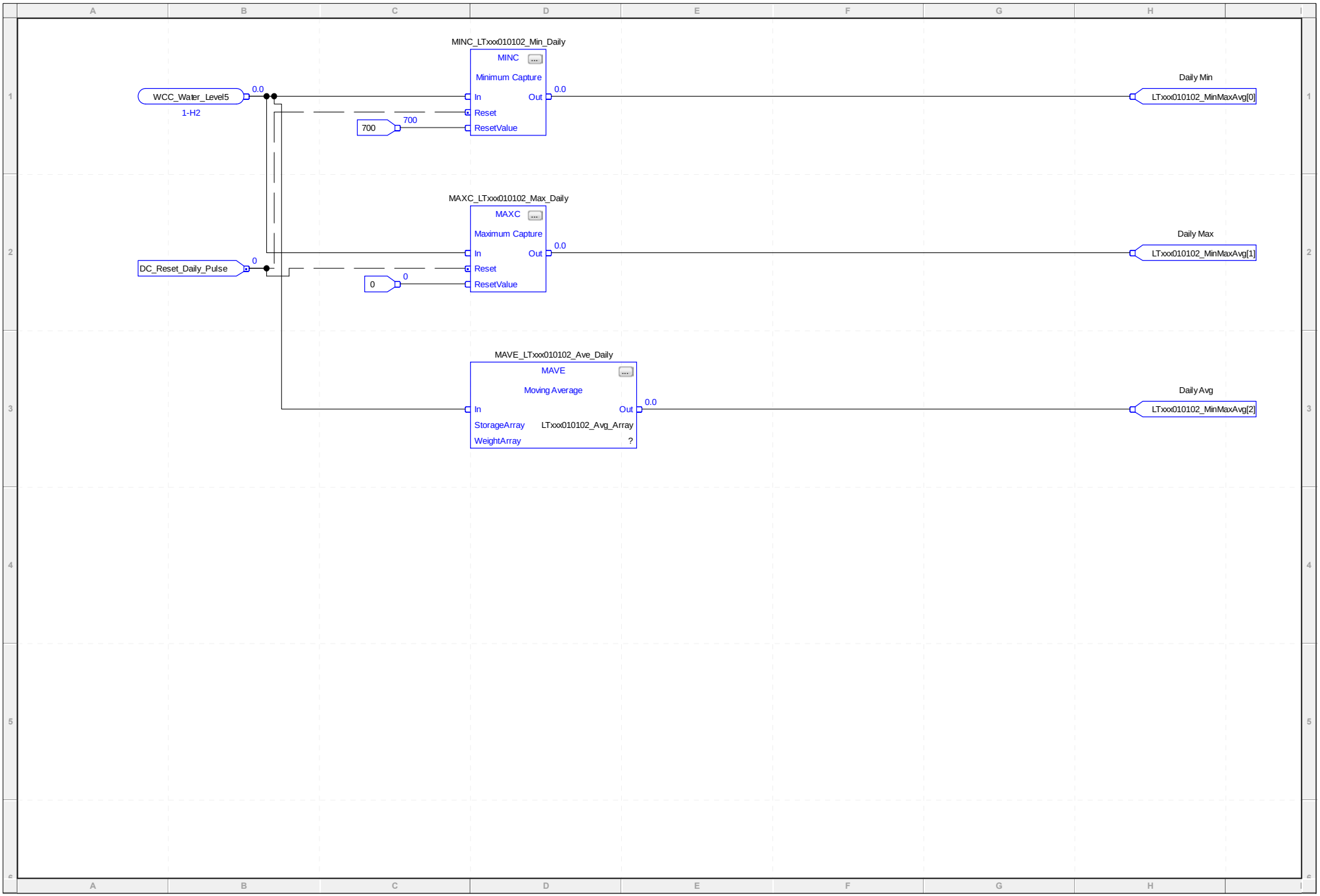
MINC_LTxxx010102_Min_Daily
MINC
Minimum Capture
WCC_Water_Level5
1-H2
0.0
In
Out
0.0
Reset
700
700
ResetValue
Daily Min
LTxxx010102_MinMaxAvg[0]
MAXC_LTxxx010102_Max_Daily
MAXC
Maximum Capture
DC_Reset_Daily_Pulse
0
In
Out
0.0
Reset
0
0
ResetValue
Daily Max
LTxxx010102_MinMaxAvg[1]
MAVE_LTxxx010102_Ave_Daily
MAVE
Moving Average
In
Out
0.0
StorageArray
LTxxx010102_Avg_Array
WeightArray
?
Daily Avg
LTxxx010102_MinMaxAvg[2]

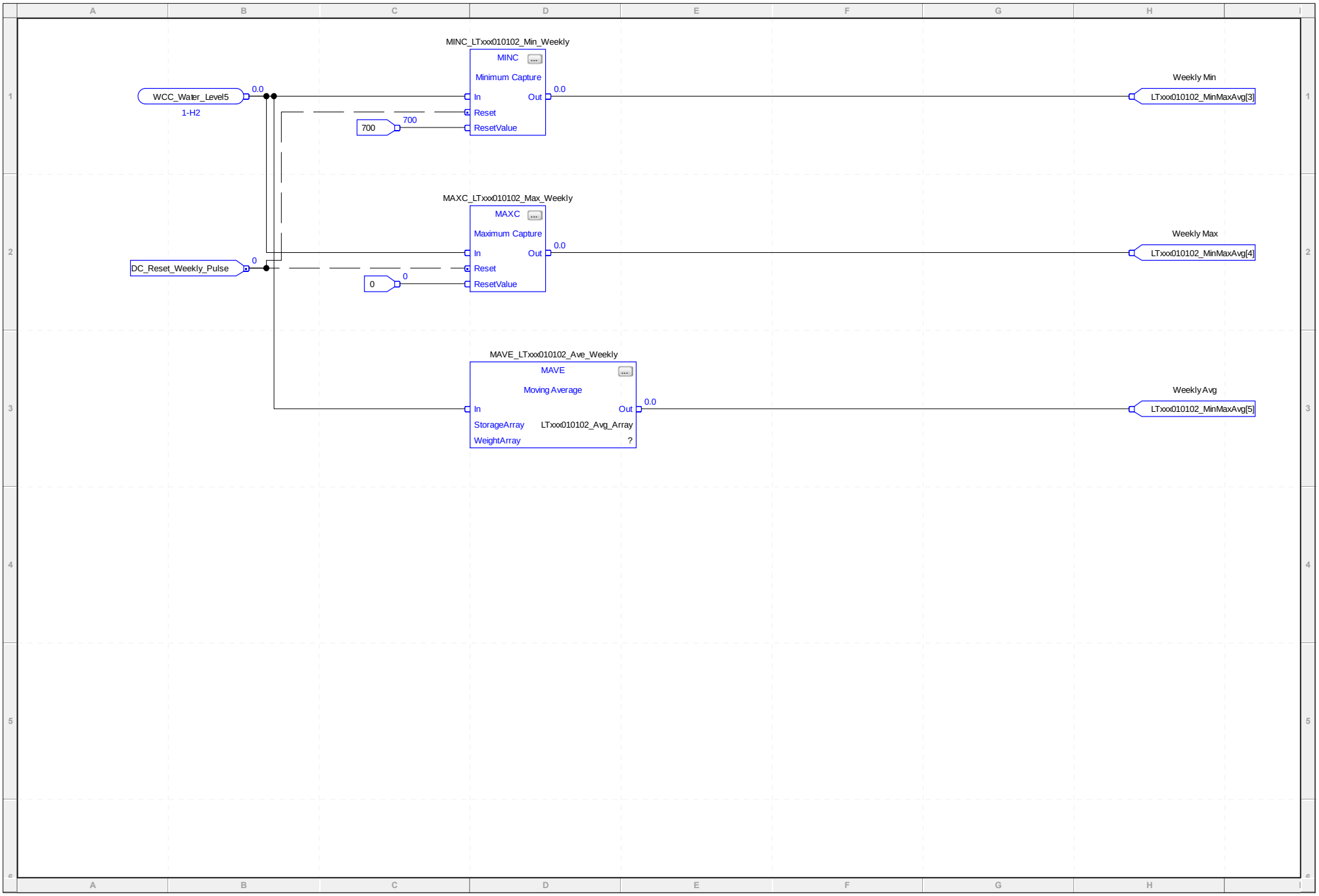
MINC_LTxxx010102_Min_Weekly
MINC
Minimum Capture
WCC_Water_Level5
1-H2
0.0
In
Out
0.0
Reset
700
700
ResetValue
Weekly Min
LTxxx010102_MinMaxAvg[3]
MAXC_LTxxx010102_Max_Weekly
MAXC
Maximum Capture
DC_Reset_Weekly_Pulse
0
In
Out
0.0
Reset
0
0
ResetValue
Weekly Max
LTxxx010102_MinMaxAvg[4]
MAVE_LTxxx010102_Ave_Weekly
MAVE
Moving Average
In
Out
0.0
StorageArray
LTxxx010102_Avg_Array
WeightArray
?
Weekly Avg
LTxxx010102_MinMaxAvg[5]

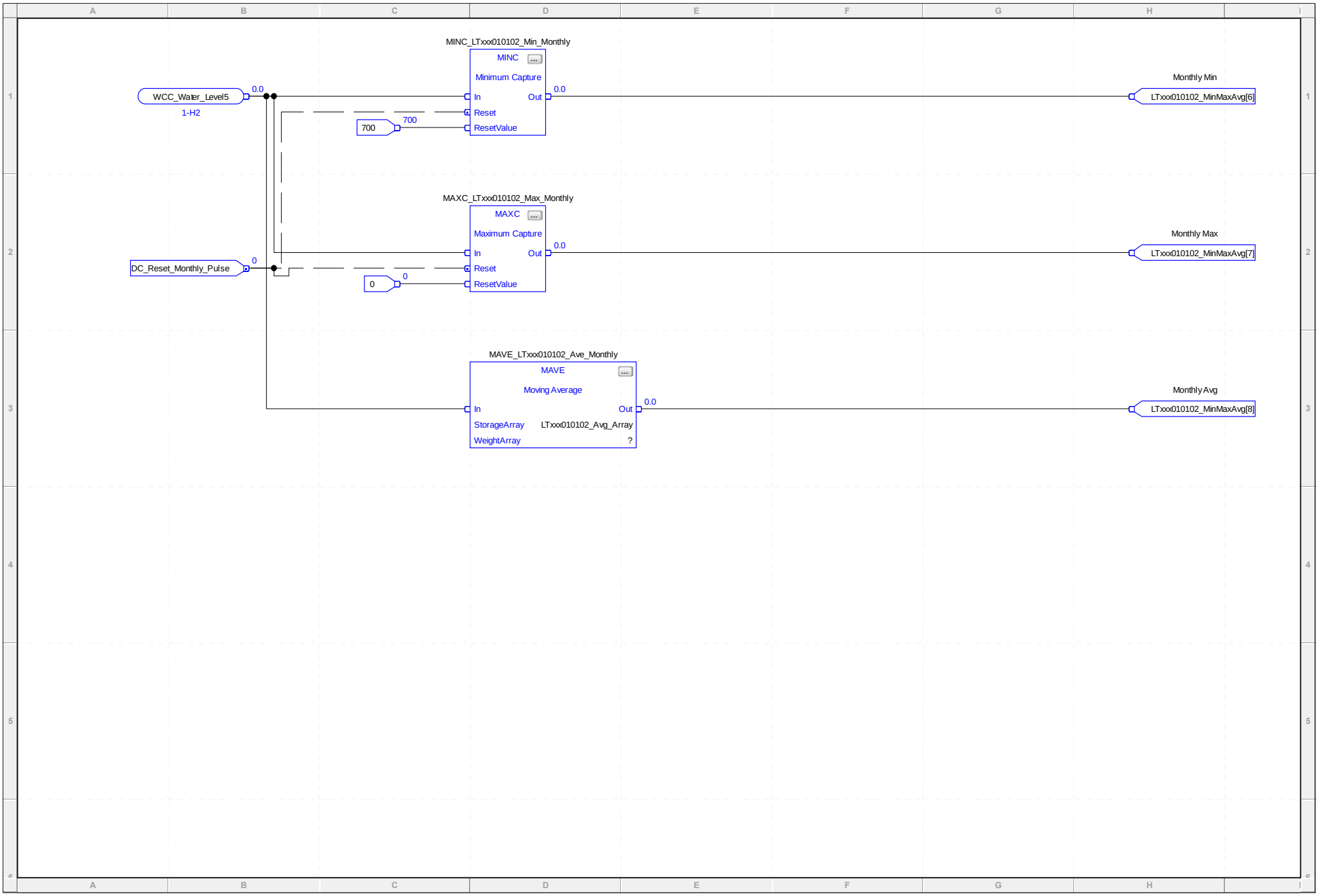
MINC_LTxxx010102_Min_Monthly
MINC
Minimum Capture
WCC_Water_Level5
1-H2
0.0
In
Out
0.0
Reset
700
700
ResetValue
Monthly Min
LTxxx010102_MinMaxAvg[6]
MAXC_LTxxx010102_Max_Monthly
MAXC
Maximum Capture
DC_Reset_Monthly_Pulse
0
In
Out
0.0
Reset
0
0
ResetValue
Monthly Max
LTxxx010102_MinMaxAvg[7]
MAVE_LTxxx010102_Ave_Monthly
MAVE
Moving Average
In
Out
0.0
StorageArray
LTxxx010102_Avg_Array
WeightArray
?
Monthly Avg
LTxxx010102_MinMaxAvg[8]

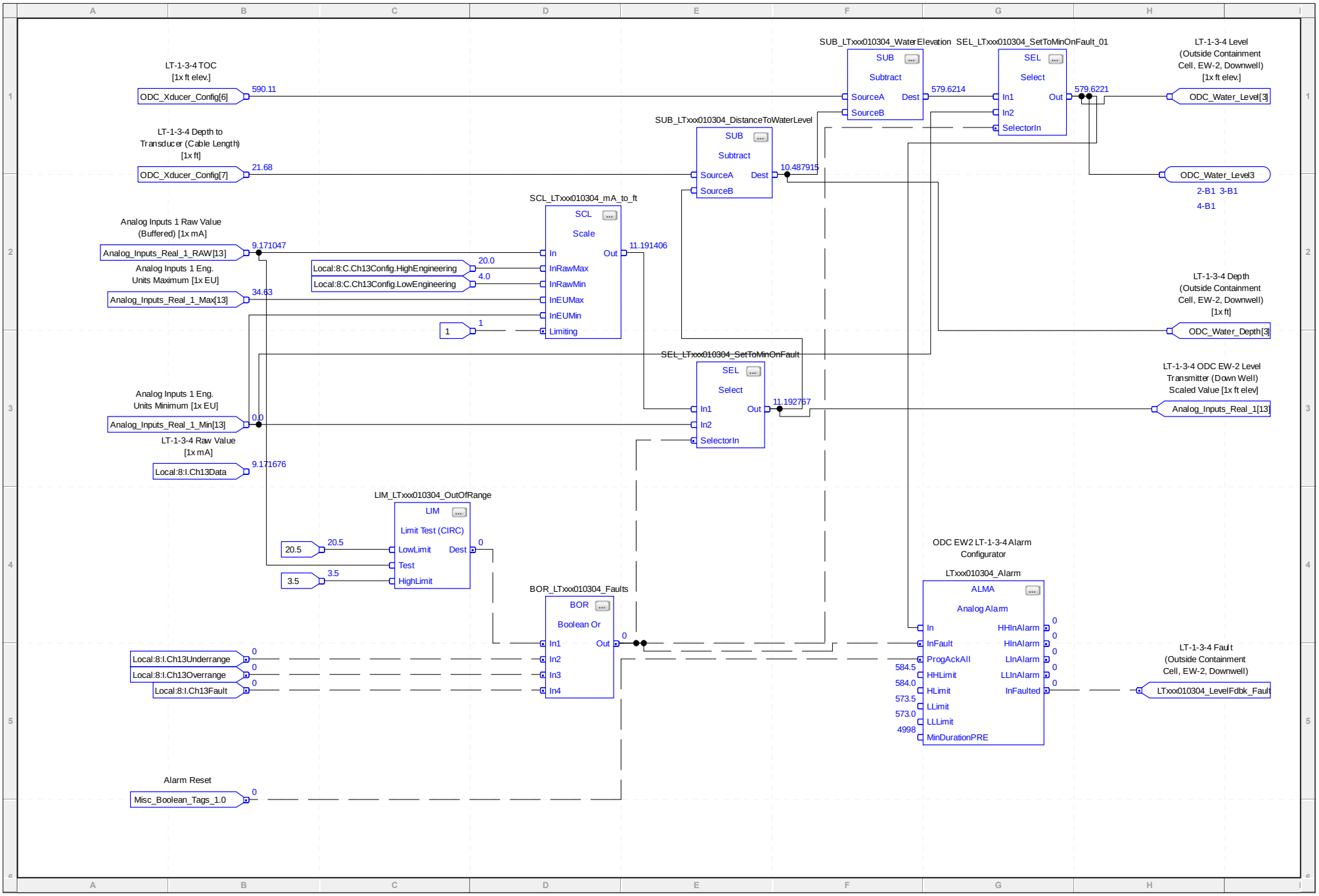
LT-1-3-4 TOC
[1x ft elev.]
ODC_Xducer_Config[6]
590.11
LT-1-3-4 Depth to
Transducer (Cable Length)
[1x ft]
ODC_Xducer_Config[7]
21.68
Analog Inputs 1 Raw Value
(Buffered) [1x mA]
Analog_Inputs_Real_1_RAW[13]
9.171047
Analog Inputs 1 Eng.
Units Maximum [1x EU]
Analog_Inputs_Real_1_Max[13]
34.63
Analog Inputs 1 Eng.
Units Minimum [1x EU]
Analog_Inputs_Real_1_Min[13]
0.0
LT-1-3-4 Raw Value
[1x mA]
Local:8:I.Ch13Data
9.171676
SCL_LTxxx010304_mA_to_ft
SCL
Scale
In
Out
11.191406
InRawMax
InRawMin
InEUMax
InEUMin
Limiting
Local:8:C.Ch13Config.HighEngineering
20.0
Local:8:C.Ch13Config.LowEngineering
4.0
1
1
SUB_LTxxx010304_WaterElevation
SUB
Subtract
SourceA
SourceB
Dest
579.6214
SEL_LTxxx010304_SetToMinOnFault_01
SEL
Select
In1
In2
SelectorIn
Out
579.6221
LT-1-3-4 Level
(Outside Containment
Cell, EW-2, Downwell)
[1x ft elev.]
ODC_Water_Level[3]
SUB_LTxxx010304_DistanceToWaterLevel
SUB
Subtract
SourceA
SourceB
Dest
10.487915
ODC_Water_Level3
2-B1 3-B1
4-B1
LT-1-3-4 Depth
(Outside Containment
Cell, EW-2, Downwell)
[1x ft]
ODC_Water_Depth[3]
SEL_LTxxx010304_SetToMinOnFault
SEL
Select
In1
In2
SelectorIn
Out
11.192767
LT-1-3-4 ODC EW-2 Level
Transmitter (Down Well)
Scaled Value [1x ft elev]
Analog_Inputs_Real_1[13]
LIM_LTxxx010304_OutOfRange
LIM
Limit Test (CIRC)
LowLimit
Test
HighLimit
Dest
20.5
20.5
3.5
3.5
0
BOR_LTxxx010304_Faults
BOR
Boolean Or
In1
In2
In3
In4
Out
0
Local:8:I.Ch13Underrange
0
Local:8:I.Ch13Overrange
0
Local:8:I.Ch13Fault
0
ODC EW2 LT-1-3-4 Alarm
Configurator
LTxxx010304_Alarm
ALMA
Analog Alarm
In
InFault
ProgAckAll
HHLimit
HLimit
LLimit
LLLimit
MinDurationPRE
584.5
584.0
573.5
573.0
4998
HHInAlarm
HInAlarm
LInAlarm
LLInAlarm
InFaulted
0
0
0
0
0
LT-1-3-4 Fault
(Outside Containment
Cell, EW-2, Downwell)
LTxxx010304_LevelFdbk_Fault
Alarm Reset
Misc_Boolean_Tags_1.0
0

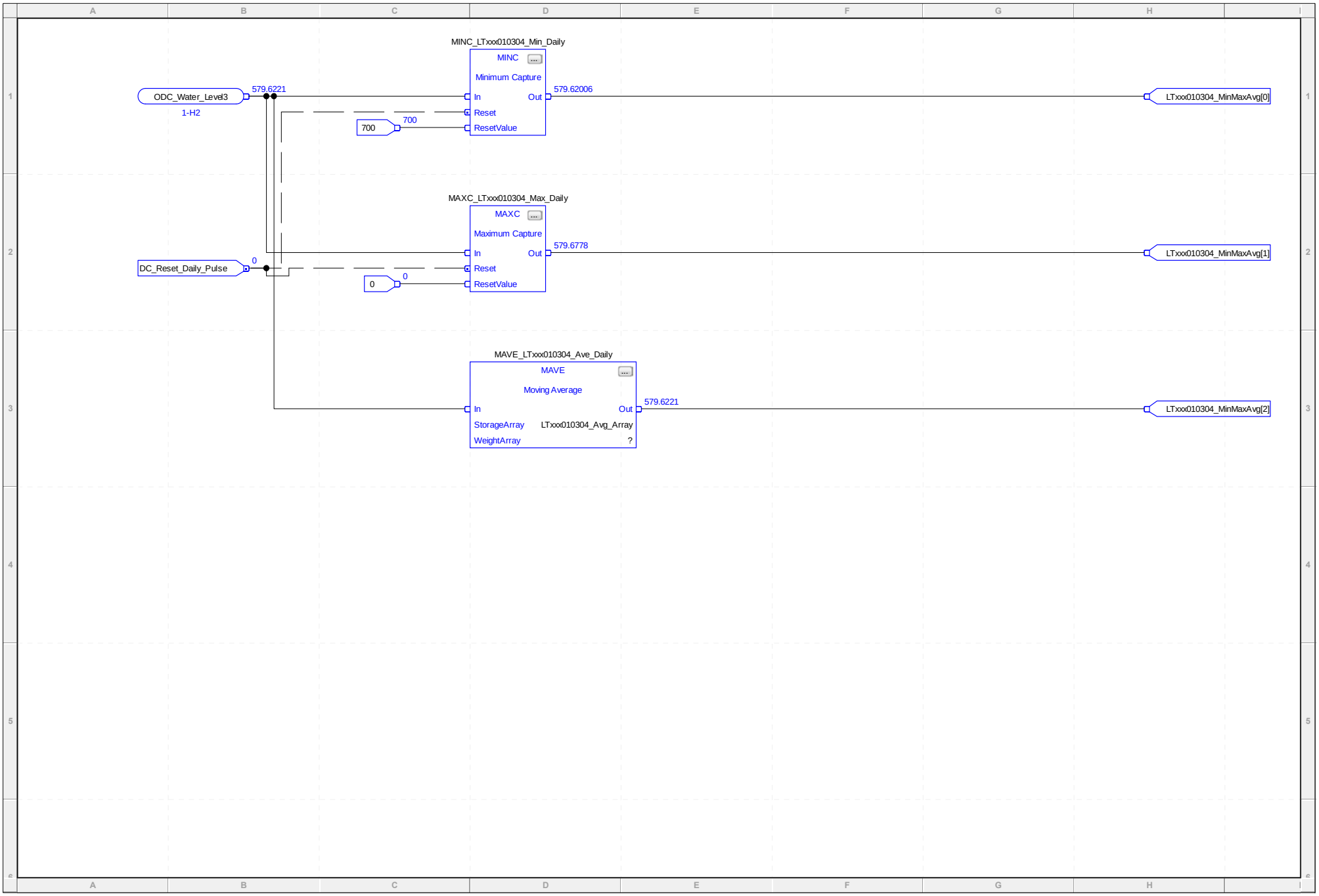
MINC_LTxxx010304_Min_Daily
MINC
Minimum Capture
ODC_Water_Level3
1-H2
579.6221
In
Out
579.62006
Reset
700
700
ResetValue
LTxxx010304_MinMaxAvg[0]
MAXC_LTxxx010304_Max_Daily
MAXC
Maximum Capture
DC_Reset_Daily_Pulse
0
In
Out
579.6778
Reset
0
0
ResetValue
LTxxx010304_MinMaxAvg[1]
MAVE_LTxxx010304_Ave_Daily
MAVE
Moving Average
In
Out
579.6221
StorageArray
LTxxx010304_Avg_Array
WeightArray
?
LTxxx010304_MinMaxAvg[2]

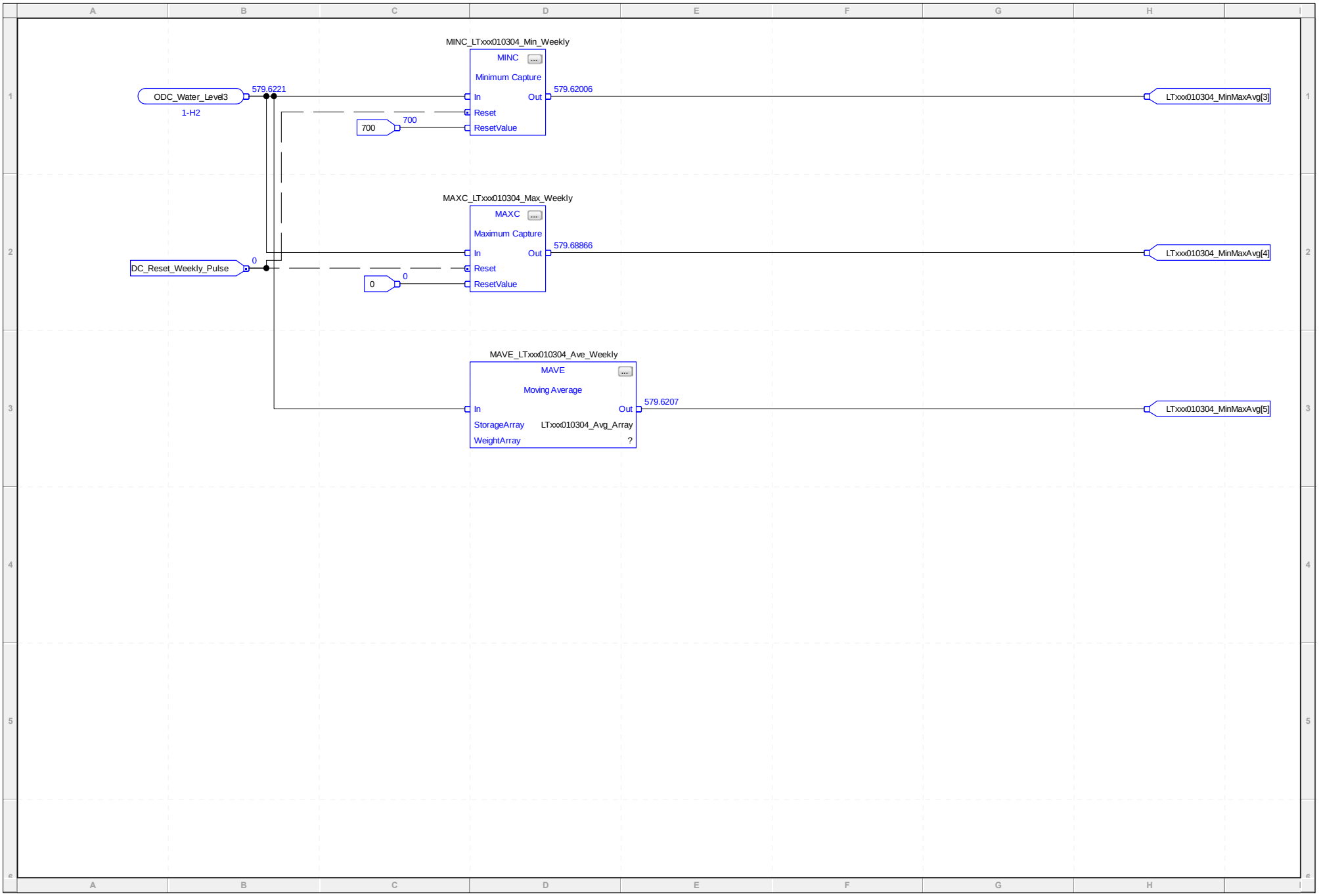
MINC_LTxxx010304_Min_Weekly
MINC
Minimum Capture
ODC_Water_Level3
1-H2
579.6221
In
Out
579.62006
Reset
700
700
ResetValue
LTxxx010304_MinMaxAvg[3]
MAXC_LTxxx010304_Max_Weekly
MAXC
Maximum Capture
DC_Reset_Weekly_Pulse
0
In
Out
579.68866
Reset
0
0
ResetValue
LTxxx010304_MinMaxAvg[4]
MAVE_LTxxx010304_Ave_Weekly
MAVE
Moving Average
In
Out
579.6207
StorageArray
LTxxx010304_Avg_Array
WeightArray
?
LTxxx010304_MinMaxAvg[5]

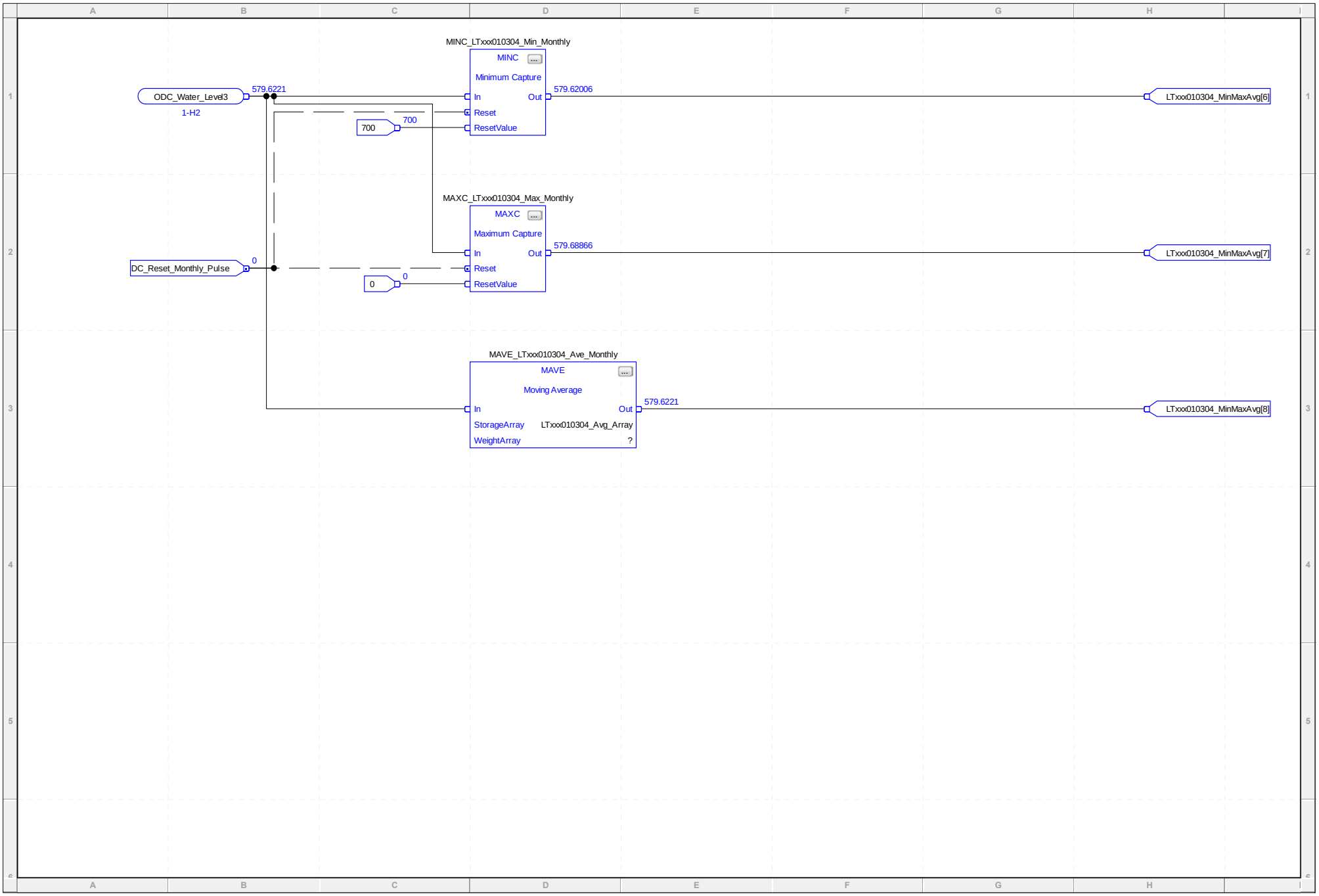
MINC_LTxxx010304_Min_Monthly
MINC
Minimum Capture
ODC_Water_Level3
1-H2
579.6221
In
Out
579.62006
Reset
700
700
ResetValue
LTxxx010304_MinMaxAvg[6]
MAXC_LTxxx010304_Max_Monthly
MAXC
Maximum Capture
DC_Reset_Monthly_Pulse
0
In
Out
579.68866
Reset
0
0
ResetValue
LTxxx010304_MinMaxAvg[7]
MAVE_LTxxx010304_Ave_Monthly
MAVE
Moving Average
In
Out
579.6221
StorageArray
LTxxx010304_Avg_Array
WeightArray
?
LTxxx010304_MinMaxAvg[8]

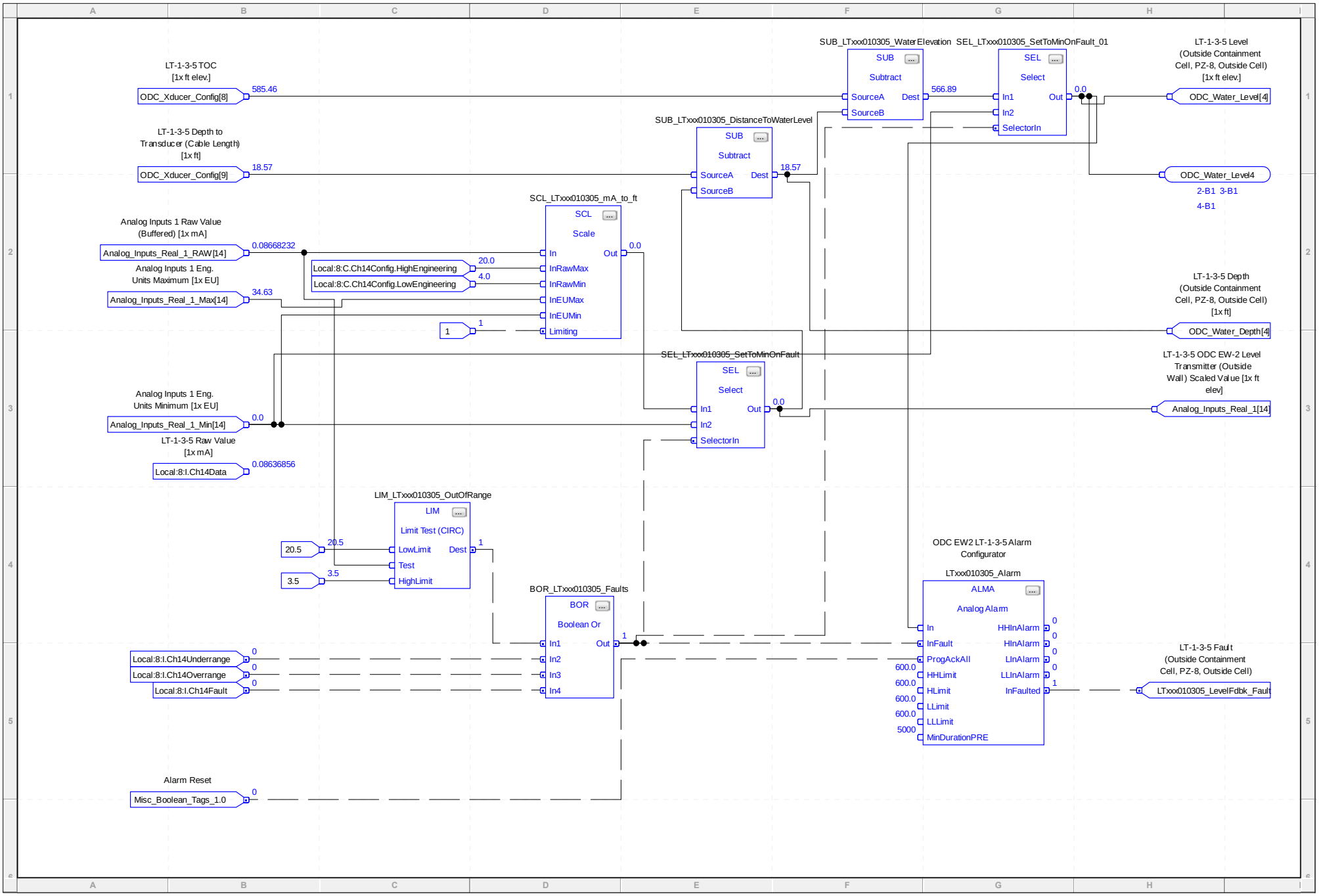
LT-1-3-5 TOC [1x ft elev.]
ODC_Xducer_Config[8]
585.46
LT-1-3-5 Depth to Transducer (Cable Length) [1x ft]
ODC_Xducer_Config[9]
18.57
Analog Inputs 1 Raw Value (Buffered) [1x mA]
Analog_Inputs_Real_1_RAW[14]
0.08668232
Analog Inputs 1 Eng. Units Maximum [1x EU]
Analog_Inputs_Real_1_Max[14]
34.63
Analog Inputs 1 Eng. Units Minimum [1x EU]
Analog_Inputs_Real_1_Min[14]
0.0
LT-1-3-5 Raw Value [1x mA]
Local:8:I.Ch14Data
0.08636856
SUB_LTxxx010305_WaterElevation
SUB
Subtract
SourceA
SourceB
Dest
566.89
SEL_LTxxx010305_SetToMinOnFault_01
SEL
Select
In1
In2
SelectorIn
Out
0.0
LT-1-3-5 Level (Outside Containment Cell, PZ-8, Outside Cell) [1x ft elev.]
ODC_Water_Level[4]
SUB_LTxxx010305_DistanceToWaterLevel
SUB
Subtract
SourceA
SourceB
Dest
18.57
ODC_Water_Level4
2-B1 3-B1
4-B1
SCL_LTxxx010305_mA_to_ft
SCL
Scale
In
InRawMax
InRawMin
InEUMax
InEUMin
Limiting
Out
0.0
Local:8:C.Ch14Config.HighEngineering
20.0
Local:8:C.Ch14Config.LowEngineering
4.0
1
LT-1-3-5 Depth (Outside Containment Cell, PZ-8, Outside Cell) [1x ft]
ODC_Water_Depth[4]
SEL_LTxxx010305_SetToMinOnFault
SEL
Select
In1
In2
SelectorIn
Out
0.0
LT-1-3-5 ODC EW-2 Level Transmitter (Outside Wall) Scaled Value [1x ft elev]
Analog_Inputs_Real_1[14]
LIM_LTxxx010305_OutOfRange
LIM
Limit Test (CIRC)
LowLimit
Test
HighLimit
Dest
20.5
3.5
1
BOR_LTxxx010305_Faults
BOR
Boolean Or
In1
In2
In3
In4
Out
Local:8:I.Ch14Underrange
Local:8:I.Ch14Overrange
Local:8:I.Ch14Fault
ODC EW2 LT-1-3-5 Alarm Configurator
LTxxx010305_Alarm
ALMA
Analog Alarm
In
InFault
ProgAckAll
HHLimit
HLimit
LLimit
LLLimit
MinDurationPRE
HHInAlarm
HInAlarm
LInAlarm
LLInAlarm
InFaulted
600.0
5000
LT-1-3-5 Fault (Outside Containment Cell, PZ-8, Outside Cell)
LTxxx010305_LevelFdbk_Fault
Alarm Reset
Misc_Boolean_Tags_1.0

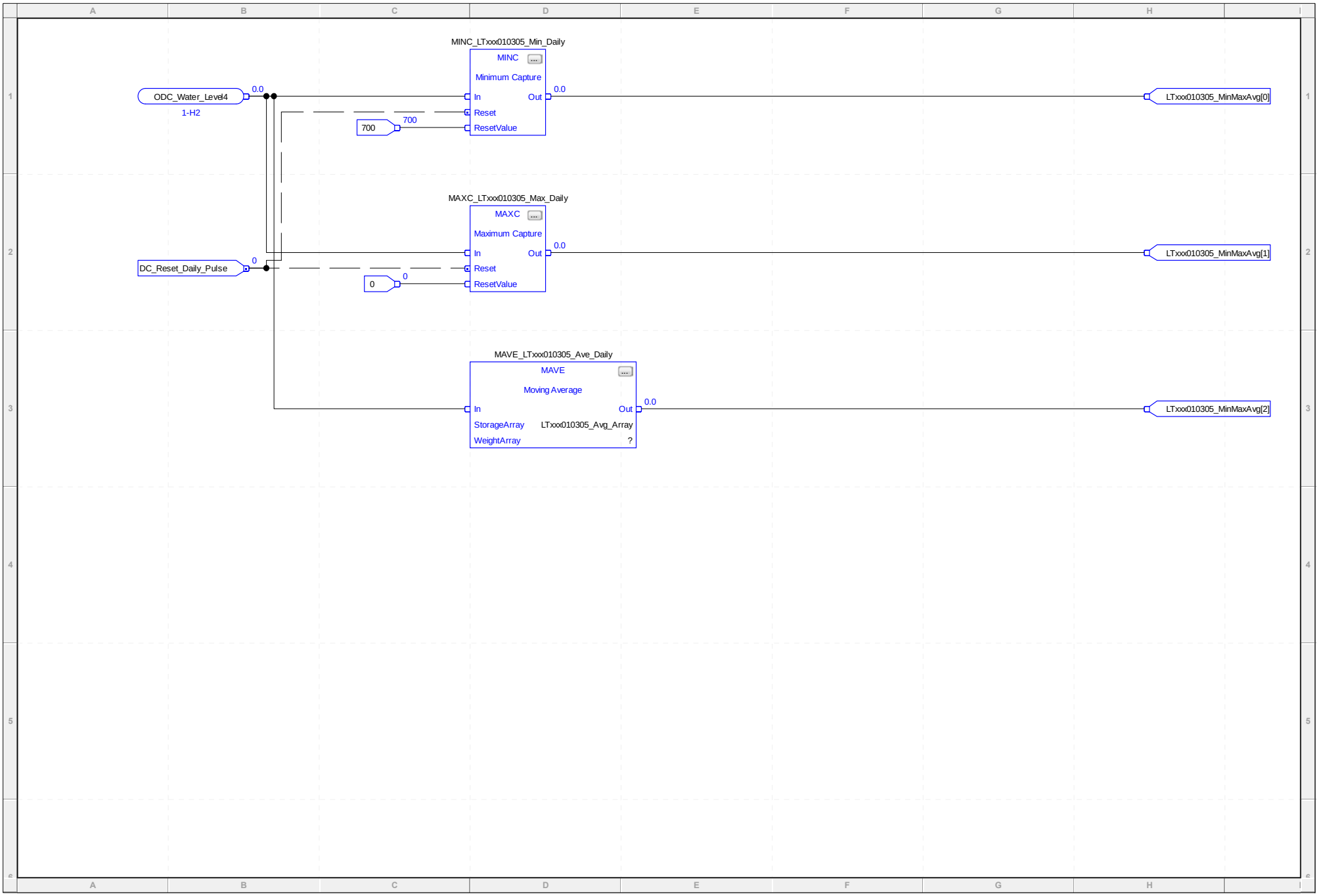
MINC_LTxxx010305_Min_Daily
MINC
Minimum Capture
ODC_Water_Level4
1-H2
0.0
In
Out
0.0
Reset
700
700
ResetValue
LTxxx010305_MinMaxAvg[0]
MAXC_LTxxx010305_Max_Daily
MAXC
Maximum Capture
DC_Reset_Daily_Pulse
0
In
Out
0.0
Reset
0
0
ResetValue
LTxxx010305_MinMaxAvg[1]
MAVE_LTxxx010305_Ave_Daily
MAVE
Moving Average
In
Out
0.0
StorageArray
LTxxx010305_Avg_Array
WeightArray
?
LTxxx010305_MinMaxAvg[2]

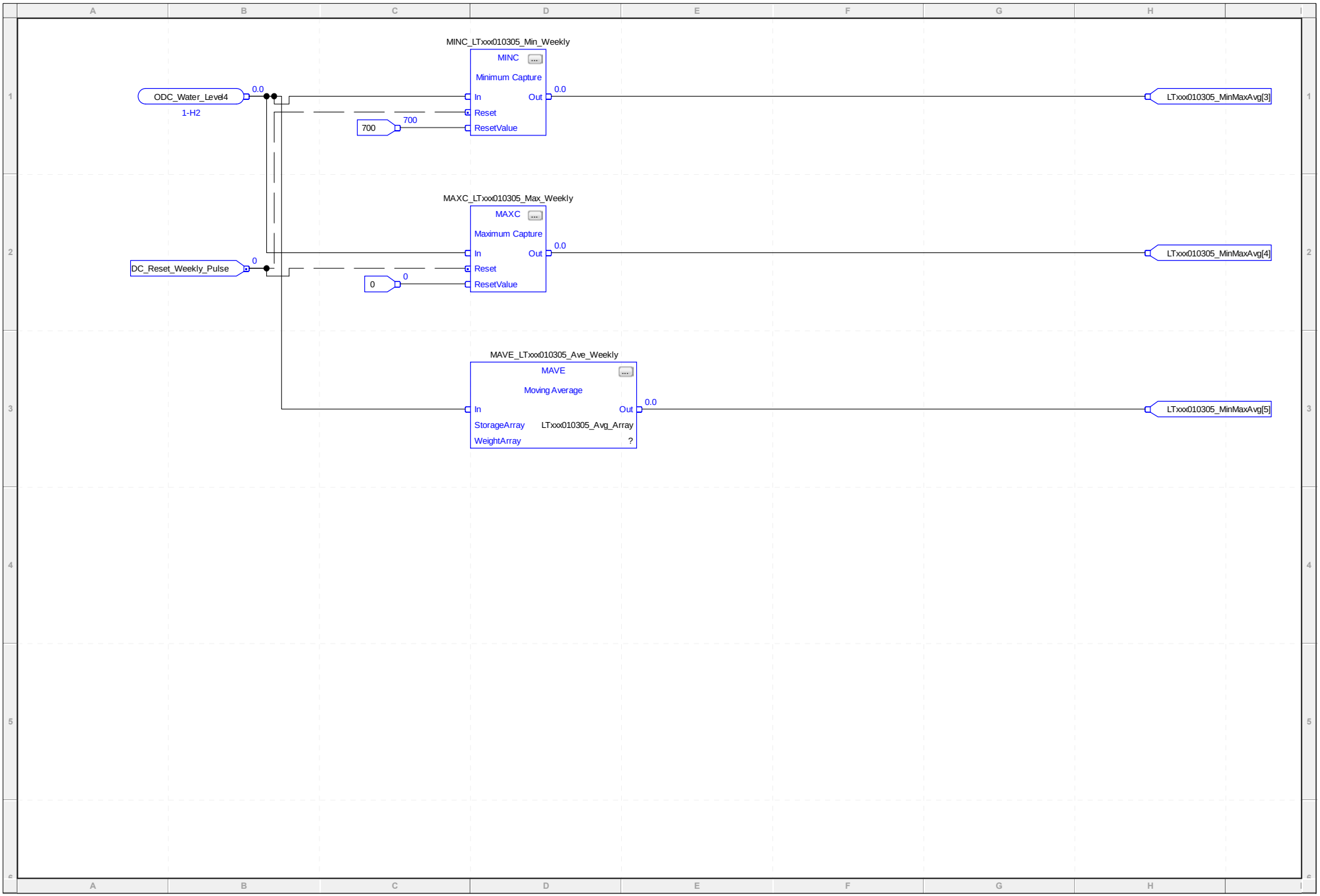
MINC_LTxxx010305_Min_Weekly
MINC
Minimum Capture
ODC_Water_Level4
1-H2
0.0
In
Out
0.0
Reset
700
700
ResetValue
LTxxx010305_MinMaxAvg[3]
MAXC_LTxxx010305_Max_Weekly
MAXC
Maximum Capture
DC_Reset_Weekly_Pulse
0
In
Out
0.0
Reset
0
0
ResetValue
LTxxx010305_MinMaxAvg[4]
MAVE_LTxxx010305_Ave_Weekly
MAVE
Moving Average
In
Out
0.0
StorageArray
LTxxx010305_Avg_Array
WeightArray
?
LTxxx010305_MinMaxAvg[5]

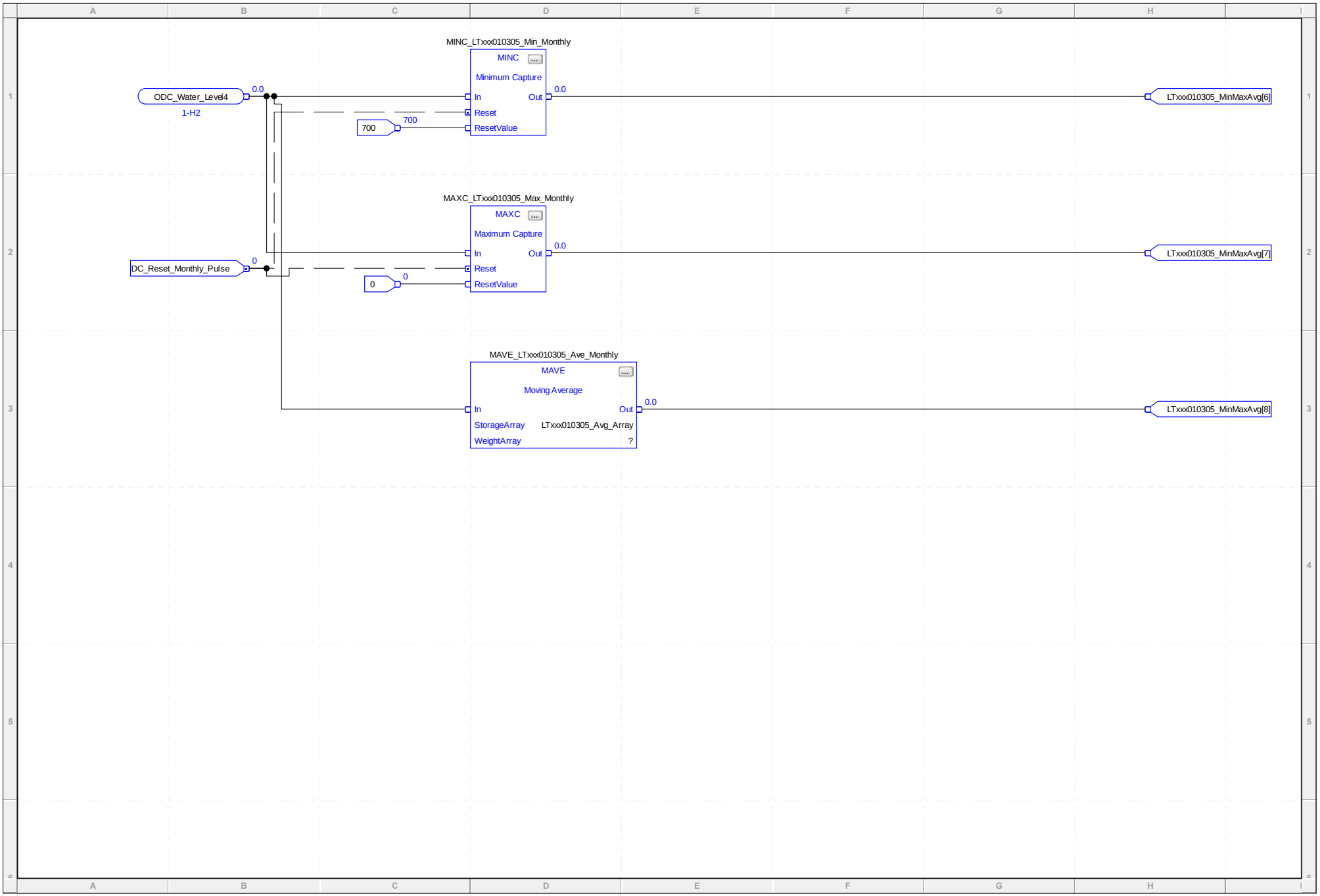
MINC_LTxxx010305_Min_Monthly
MINC
Minimum Capture
ODC_Water_Level4
1-H2
0.0
In
Out
0.0
Reset
700
700
ResetValue
LTxxx010305_MinMaxAvg[6]
MAXC_LTxxx010305_Max_Monthly
MAXC
Maximum Capture
DC_Reset_Monthly_Pulse
0
In
Out
0.0
Reset
0
0
ResetValue
LTxxx010305_MinMaxAvg[7]
MAVE_LTxxx010305_Ave_Monthly
MAVE
Moving Average
In
Out
0.0
StorageArray
LTxxx010305_Avg_Array
WeightArray
?
LTxxx010305_MinMaxAvg[8]

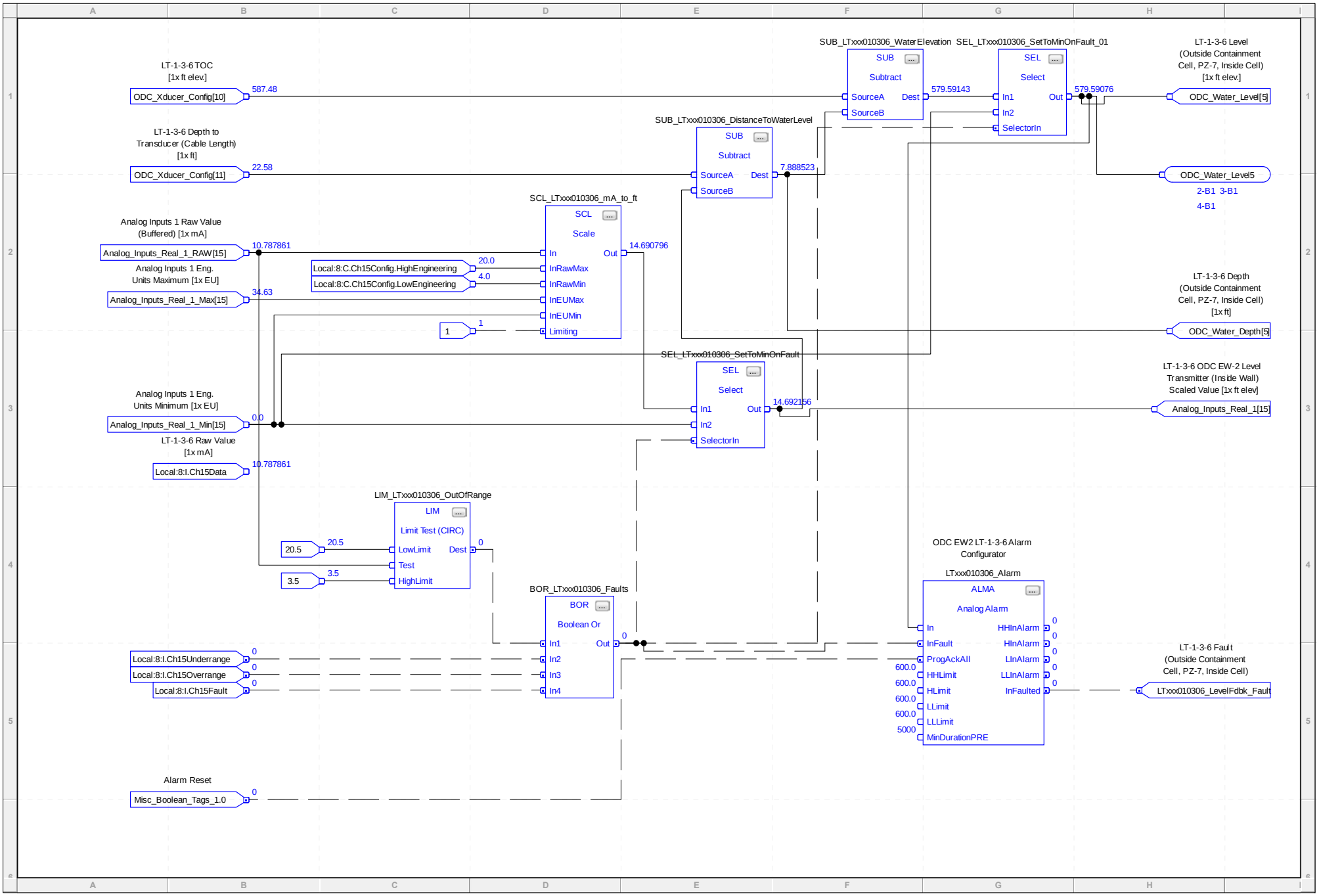
LT-1-3-6 TOC
[1x ft elev.]
ODC_Xducer_Config[10]
587.48
LT-1-3-6 Depth to
Transducer (Cable Length)
[1x ft]
ODC_Xducer_Config[11]
22.58
Analog Inputs 1 Raw Value
(Buffered) [1x mA]
Analog_Inputs_Real_1_RAW[15]
10.787861
Analog Inputs 1 Eng.
Units Maximum [1x EU]
Analog_Inputs_Real_1_Max[15]
34.63
Analog Inputs 1 Eng.
Units Minimum [1x EU]
Analog_Inputs_Real_1_Min[15]
0.0
LT-1-3-6 Raw Value
[1x mA]
Local:8:I.Ch15Data
10.787861
SCL_LTxxx010306_mA_to_ft
SCL
Scale
In
Out
14.690796
InRawMax
InRawMin
InEUMax
InEUMin
Limiting
Local:8:C.Ch15Config.HighEngineering
20.0
Local:8:C.Ch15Config.LowEngineering
4.0
1
1
SUB_LTxxx010306_WaterElevation
SUB
Subtract
SourceA
SourceB
Dest
579.59143
SEL_LTxxx010306_SetToMinOnFault_01
SEL
Select
In1
In2
SelectorIn
Out
579.59076
LT-1-3-6 Level
(Outside Containment
Cell, PZ-7, Inside Cell)
[1x ft elev.]
ODC_Water_Level[5]
SUB_LTxxx010306_DistanceToWaterLevel
SUB
Subtract
SourceA
SourceB
Dest
7.888523
ODC_Water_Level5
2-B1 3-B1
4-B1
LT-1-3-6 Depth
(Outside Containment
Cell, PZ-7, Inside Cell)
[1x ft]
ODC_Water_Depth[5]
SEL_LTxxx010306_SetToMinOnFault
SEL
Select
In1
In2
SelectorIn
Out
14.692156
LT-1-3-6 ODC EW-2 Level
Transmitter (Inside Wall)
Scaled Value [1x ft elev]
Analog_Inputs_Real_1[15]
LIM_LTxxx010306_OutOfRange
LIM
Limit Test (CIRC)
LowLimit
Test
HighLimit
Dest
20.5
20.5
3.5
3.5
0
BOR_LTxxx010306_Faults
BOR
Boolean Or
In1
In2
In3
In4
Out
0
Local:8:I.Ch15Underrange
Local:8:I.Ch15Overrange
Local:8:I.Ch15Fault
ODC EW2 LT-1-3-6 Alarm
Configurator
LTxxx010306_Alarm
ALMA
Analog Alarm
In
InFault
ProgAckAll
HHLimit
HLimit
LLimit
LLLimit
MinDurationPRE
600.0
600.0
600.0
600.0
5000
HHInAlarm
HInAlarm
LInAlarm
LLInAlarm
InFaulted
LT-1-3-6 Fault
(Outside Containment
Cell, PZ-7, Inside Cell)
LTxxx010306_LevelFdbk_Fault
Alarm Reset
Misc_Boolean_Tags_1.0

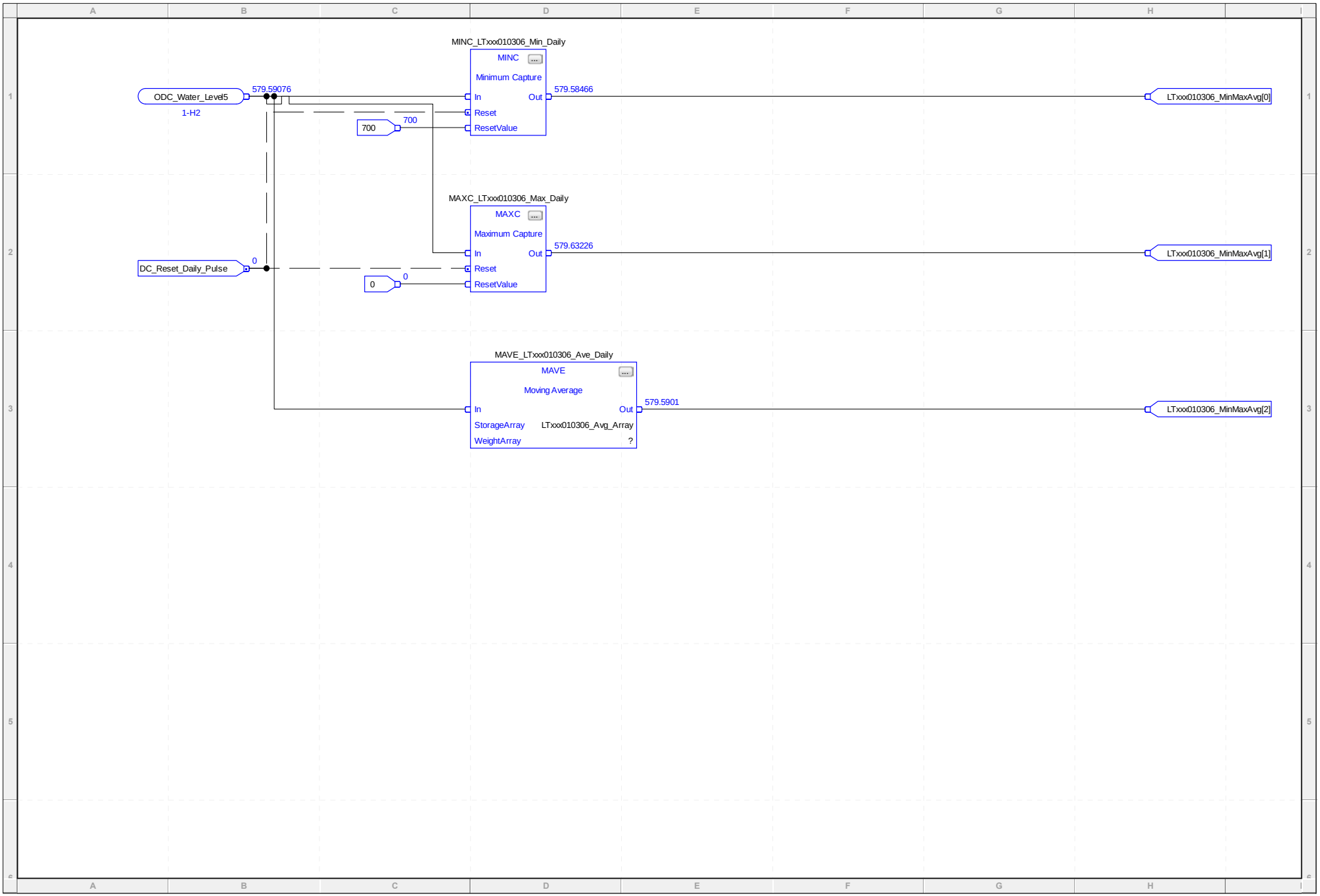
MINC_LTxxx010306_Min_Daily
MINC
Minimum Capture
ODC_Water_Level5
1-H2
579.59076
In
Out
579.58466
Reset
700
700
ResetValue
LTxxx010306_MinMaxAvg[0]
MAXC_LTxxx010306_Max_Daily
MAXC
Maximum Capture
DC_Reset_Daily_Pulse
0
In
Out
579.63226
Reset
0
0
ResetValue
LTxxx010306_MinMaxAvg[1]
MAVE_LTxxx010306_Ave_Daily
MAVE
Moving Average
In
Out
579.5901
StorageArray
LTxxx010306_Avg_Array
WeightArray
?
LTxxx010306_MinMaxAvg[2]

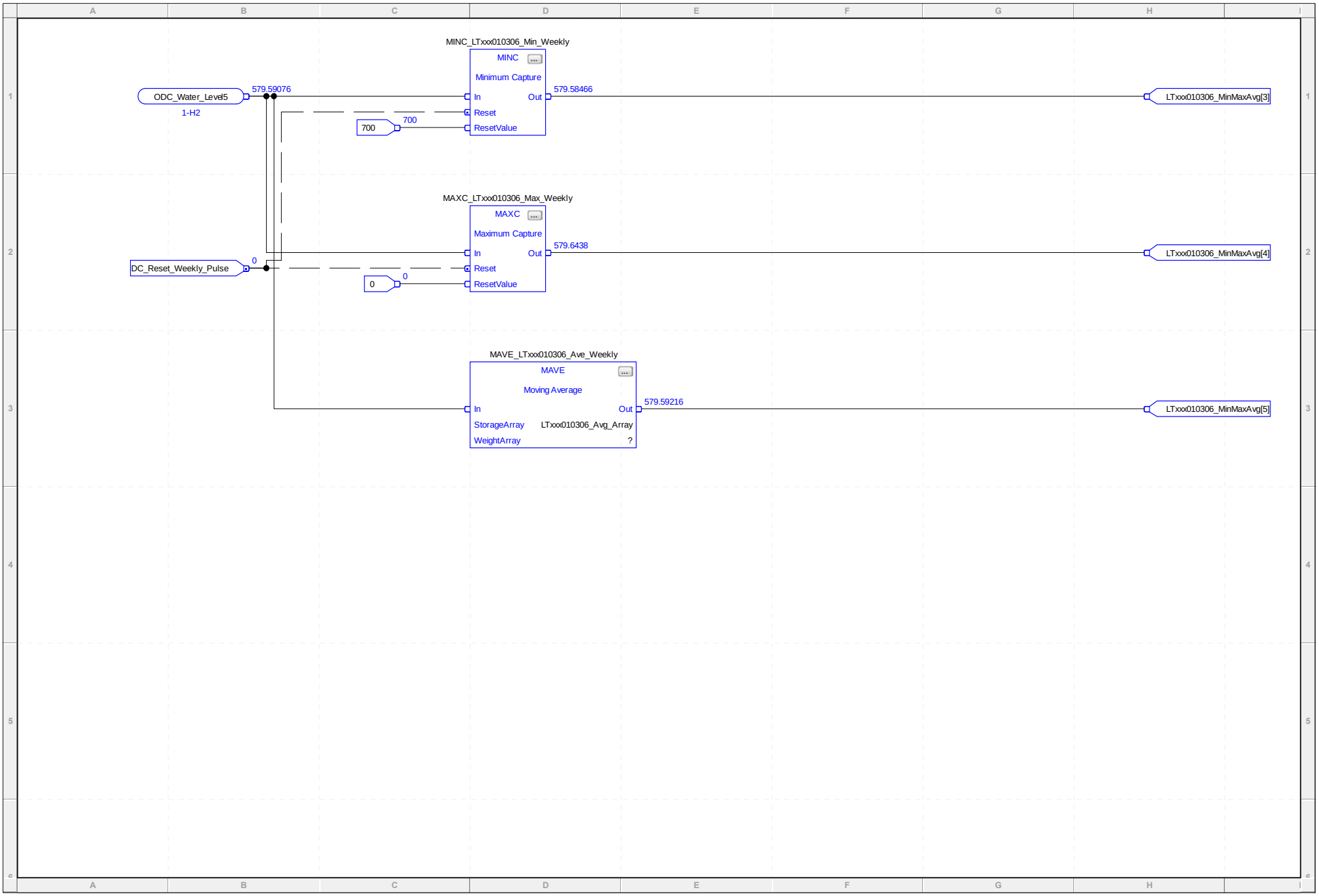
MINC_LTxxx010306_Min_Weekly
MINC
Minimum Capture
ODC_Water_Level5
1-H2
579.59076
In
Out
579.58466
Reset
700
700
ResetValue
LTxxx010306_MinMaxAvg[3]
MAXC_LTxxx010306_Max_Weekly
MAXC
Maximum Capture
DC_Reset_Weekly_Pulse
0
In
Out
579.6438
Reset
0
0
ResetValue
LTxxx010306_MinMaxAvg[4]
MAVE_LTxxx010306_Ave_Weekly
MAVE
Moving Average
In
Out
579.59216
StorageArray
LTxxx010306_Avg_Array
WeightArray
?
LTxxx010306_MinMaxAvg[5]

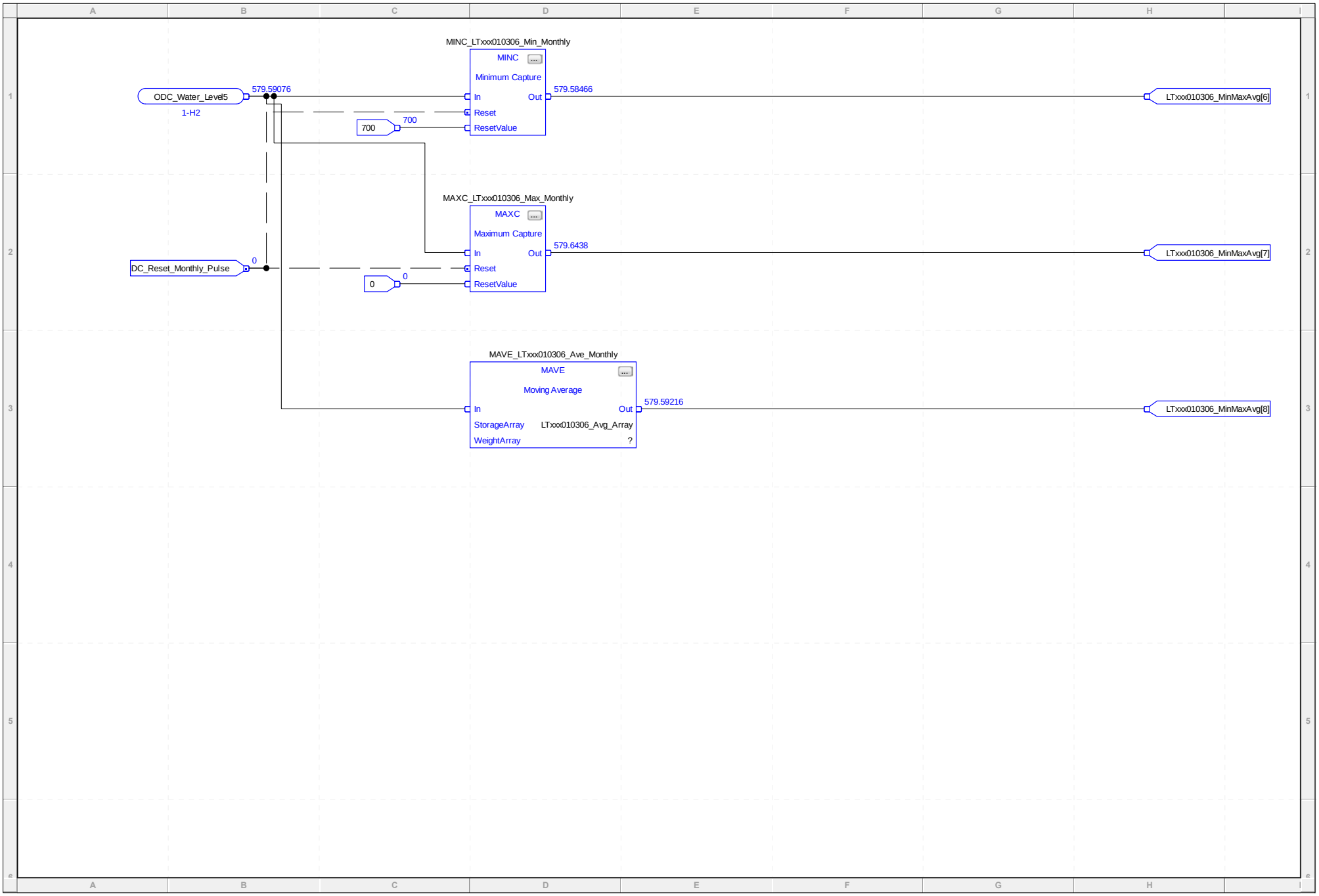
MINC_LTxxx010306_Min_Monthly
MINC
Minimum Capture
ODC_Water_Level5
1-H2
579.59076
In
Out
579.58466
Reset
700
700
ResetValue
LTxxx010306_MinMaxAvg[6]
MAXC_LTxxx010306_Max_Monthly
MAXC
Maximum Capture
DC_Reset_Monthly_Pulse
0
In
Out
579.6438
Reset
0
0
ResetValue
LTxxx010306_MinMaxAvg[7]
MAVE_LTxxx010306_Ave_Monthly
MAVE
Moving Average
In
Out
579.59216
StorageArray
LTxxx010306_Avg_Array
WeightArray
?
LTxxx010306_MinMaxAvg[8]

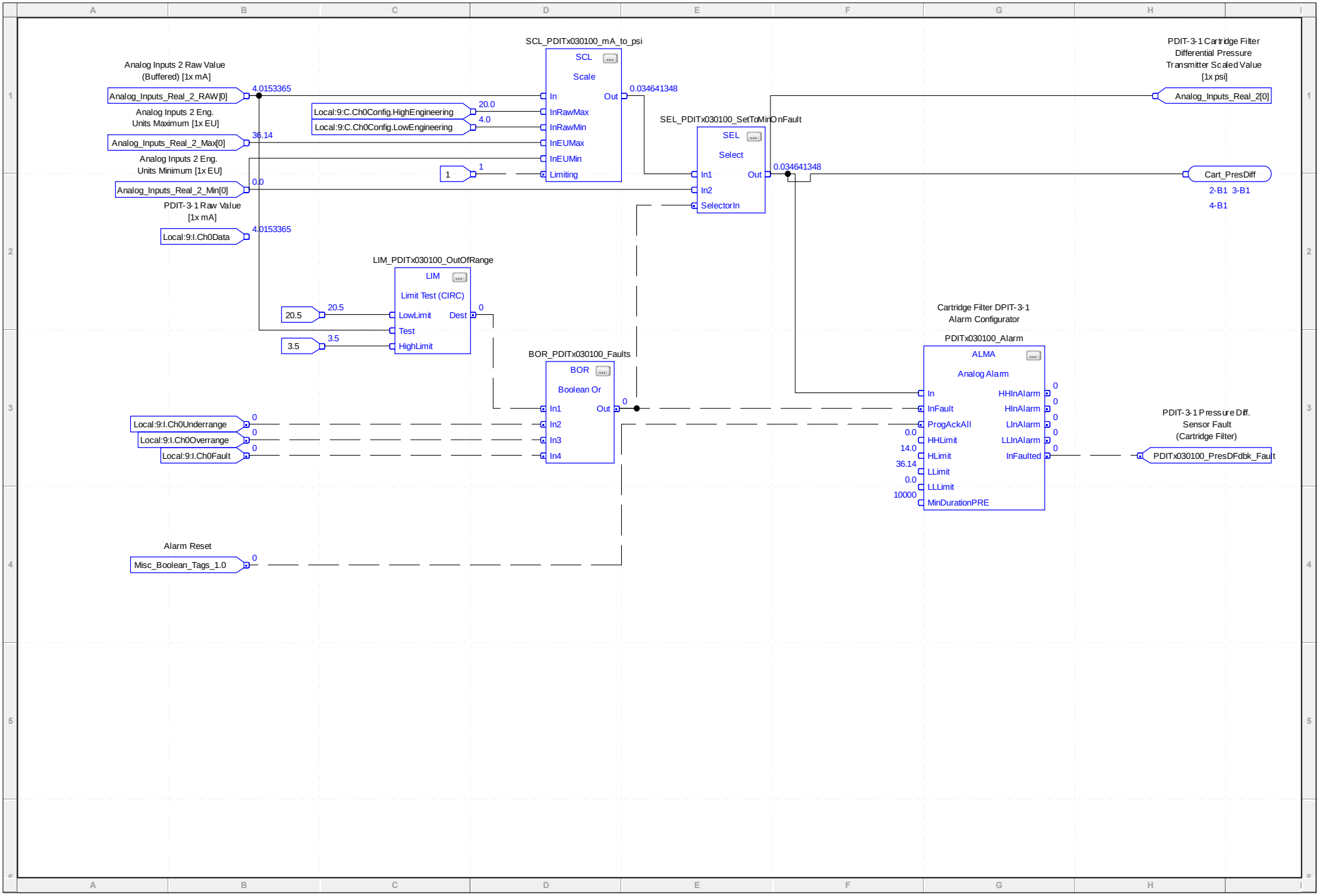
SCL_PDITx030100_mA_to_psi
SCL
Scale
Analog Inputs 2 Raw Value (Buffered) [1x mA]
Analog_Inputs_Real_2_RAW[0]
4.0153365
Analog Inputs 2 Eng. Units Maximum [1x EU]
Analog_Inputs_Real_2_Max[0]
36.14
Analog Inputs 2 Eng. Units Minimum [1x EU]
Analog_Inputs_Real_2_Min[0]
0.0
PDIT-3-1 Raw Value [1x mA]
Local:9:I.Ch0Data
4.0153365
Local:9:C.Ch0Config.HighEngineering
20.0
Local:9:C.Ch0Config.LowEngineering
4.0
1
1
In
InRawMax
InRawMin
InEUMax
InEUMin
Limiting
Out
0.034641348
SEL_PDITx030100_SetToMinOnFault
SEL
Select
In1
In2
SelectorIn
Out
0.034641348
PDIT-3-1 Cartridge Filter Differential Pressure Transmitter Scaled Value [1x psi]
Analog_Inputs_Real_2[0]
Cart_PresDiff
2-B1 3-B1
4-B1
LIM_PDITx030100_OutOfRange
LIM
Limit Test (CIRC)
20.5
20.5
3.5
3.5
LowLimit
Test
HighLimit
Dest
0
BOR_PDITx030100_Faults
BOR
Boolean Or
Local:9:I.Ch0Underrange
Local:9:I.Ch0Overrange
Local:9:I.Ch0Fault
0
0
0
In1
In2
In3
In4
Out
0
Cartridge Filter DPIT-3-1 Alarm Configurator
PDITx030100_Alarm
ALMA
Analog Alarm
In
InFault
ProgAckAll
HHLimit
HLimit
LLimit
LLLimit
MinDurationPRE
0.0
14.0
36.14
0.0
10000
HHInAlarm
HInAlarm
LInAlarm
LLInAlarm
InFaulted
0
0
0
0
0
PDIT-3-1 Pressure Diff. Sensor Fault (Cartridge Filter)
PDITx030100_PresDFdbk_Fault
Alarm Reset
Misc_Boolean_Tags_1.0
0

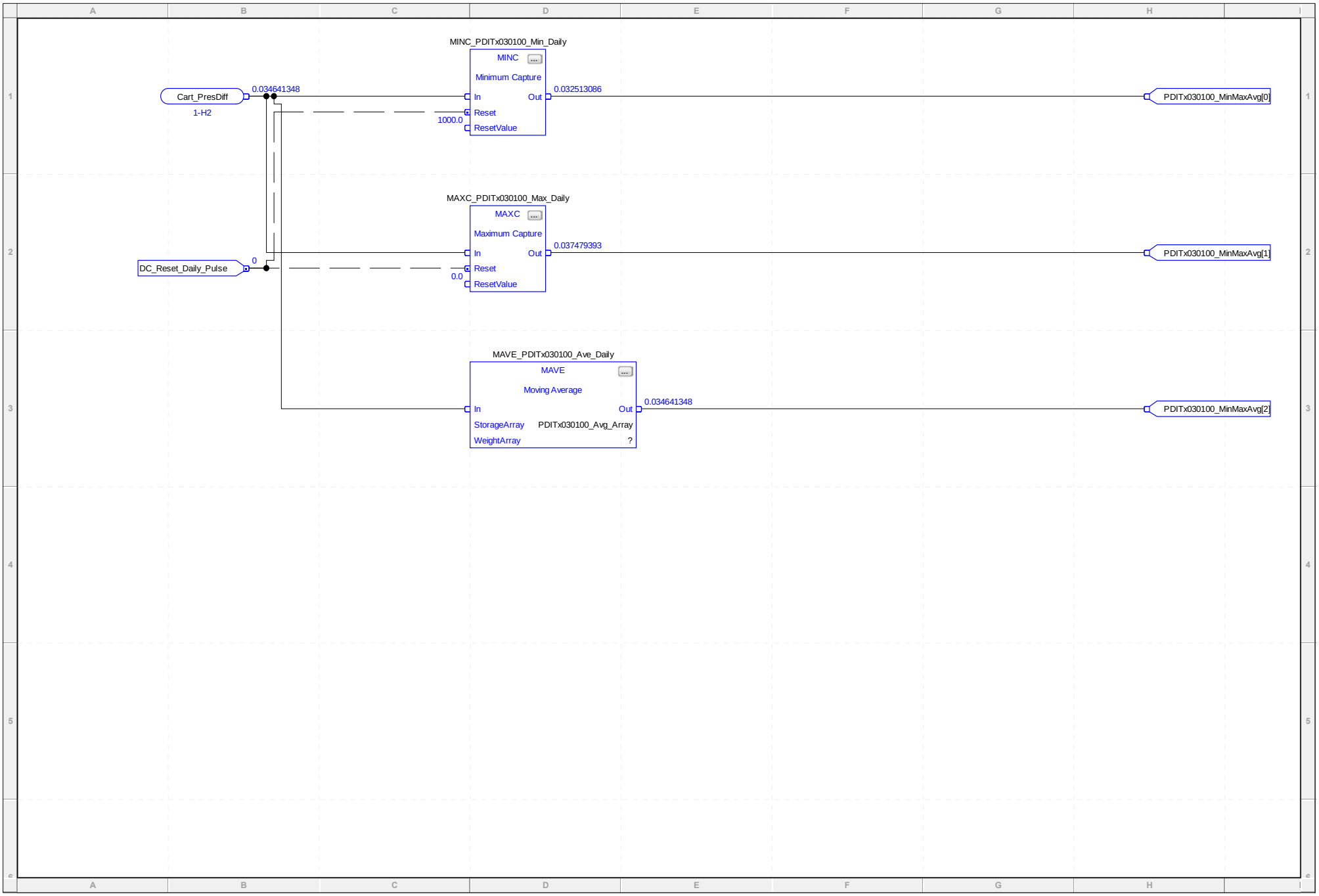
MINC_PDITx030100_Min_Daily
MINC
Minimum Capture
Cart_PresDiff
1-H2
0.034641348
In
Out
0.032513086
Reset
1000.0
ResetValue
PDITx030100_MinMaxAvg[0]
MAXC_PDITx030100_Max_Daily
MAXC
Maximum Capture
DC_Reset_Daily_Pulse
0
In
Out
0.037479393
Reset
0.0
ResetValue
PDITx030100_MinMaxAvg[1]
MAVE_PDITx030100_Ave_Daily
MAVE
Moving Average
In
Out
0.034641348
StorageArray
PDITx030100_Avg_Array
WeightArray
?
PDITx030100_MinMaxAvg[2]

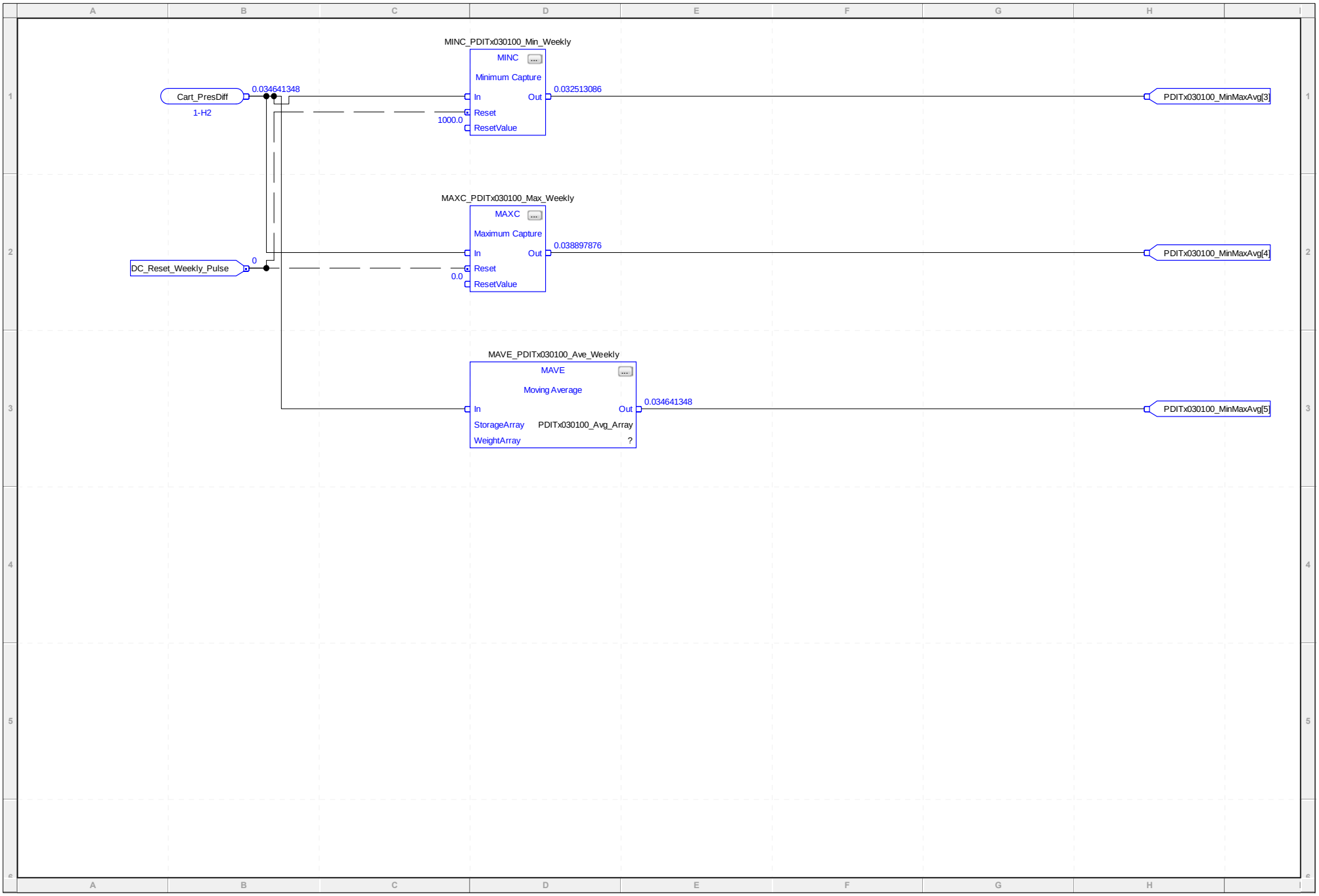
MINC_PDITx030100_Min_Weekly
MINC
Minimum Capture
Cart_PresDiff
1-H2
0.034641348
In
Out
0.032513086
Reset
1000.0
ResetValue
PDITx030100_MinMaxAvg[3]
MAXC_PDITx030100_Max_Weekly
MAXC
Maximum Capture
DC_Reset_Weekly_Pulse
0
In
Out
0.038897876
Reset
0.0
ResetValue
PDITx030100_MinMaxAvg[4]
MAVE_PDITx030100_Ave_Weekly
MAVE
Moving Average
In
Out
0.034641348
StorageArray
PDITx030100_Avg_Array
WeightArray
?
PDITx030100_MinMaxAvg[5]

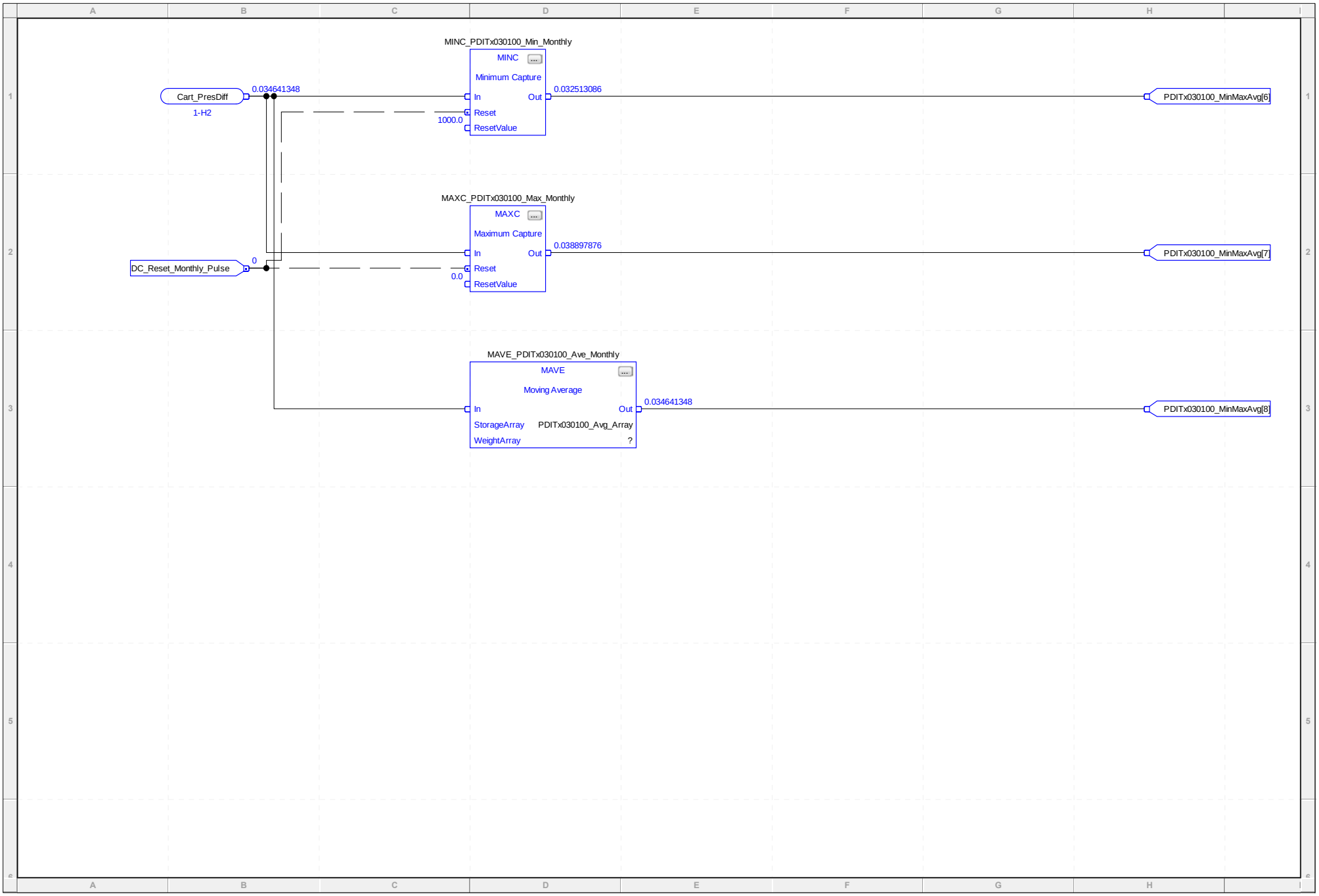
MINC_PDITx030100_Min_Monthly
MINC
Minimum Capture
Cart_PresDiff
1-H2
0.034641348
In
Out
0.032513086
Reset
1000.0
ResetValue
PDITx030100_MinMaxAvg[6]
MAXC_PDITx030100_Max_Monthly
MAXC
Maximum Capture
DC_Reset_Monthly_Pulse
0
In
Out
0.038897876
Reset
0.0
ResetValue
PDITx030100_MinMaxAvg[7]
MAVE_PDITx030100_Ave_Monthly
MAVE
Moving Average
In
Out
0.034641348
StorageArray
PDITx030100_Avg_Array
WeightArray
?
PDITx030100_MinMaxAvg[8]

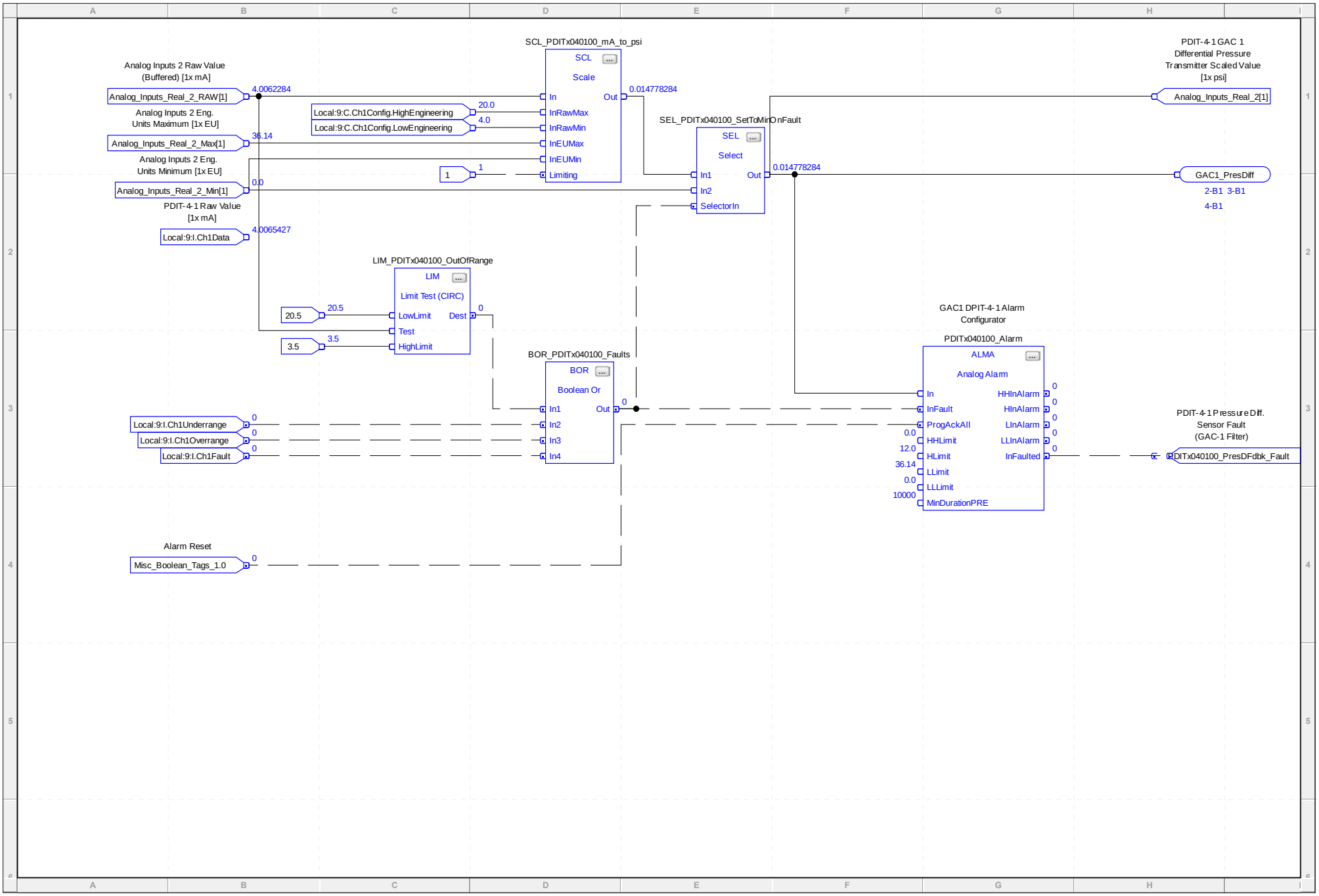
SCL_PDITx040100_mA_to_psi
SCL
Scale
Analog Inputs 2 Raw Value (Buffered) [1x mA]
Analog_Inputs_Real_2_RAW[1]
4.0062284
Analog Inputs 2 Eng. Units Maximum [1x EU]
Analog_Inputs_Real_2_Max[1]
36.14
Analog Inputs 2 Eng. Units Minimum [1x EU]
Analog_Inputs_Real_2_Min[1]
0.0
Local:9:C.Ch1Config.HighEngineering
20.0
Local:9:C.Ch1Config.LowEngineering
4.0
1
1
In
InRawMax
InRawMin
InEUMax
InEUMin
Limiting
Out
0.014778284
SEL_PDITx040100_SetToMinOnFault
SEL
Select
In1
In2
SelectorIn
Out
0.014778284
PDIT-4-1 GAC 1 Differential Pressure Transmitter Scaled Value [1x psi]
Analog_Inputs_Real_2[1]
GAC1_PresDiff
2-B1 3-B1
4-B1
PDIT-4-1 Raw Value [1x mA]
Local:9:I.Ch1Data
4.0065427
LIM_PDITx040100_OutOfRange
LIM
Limit Test (CIRC)
20.5
20.5
LowLimit
Test
HighLimit
Dest
0
3.5
3.5
BOR_PDITx040100_Faults
BOR
Boolean Or
Local:9:I.Ch1Underrange
Local:9:I.Ch1Overrange
Local:9:I.Ch1Fault
0
0
0
In1
In2
In3
In4
Out
0
GAC1 DPIT-4-1 Alarm Configurator
PDITx040100_Alarm
ALMA
Analog Alarm
In
InFault
ProgAckAll
0.0
HHLimit
12.0
HLimit
36.14
LLimit
0.0
LLLimit
10000
MinDurationPRE
HHInAlarm
HInAlarm
LInAlarm
LLInAlarm
InFaulted
0
0
0
0
0
PDIT-4-1 Pressure Diff. Sensor Fault (GAC-1 Filter)
DITx040100_PresDFdbk_Fault
Alarm Reset
Misc_Boolean_Tags_1.0
0

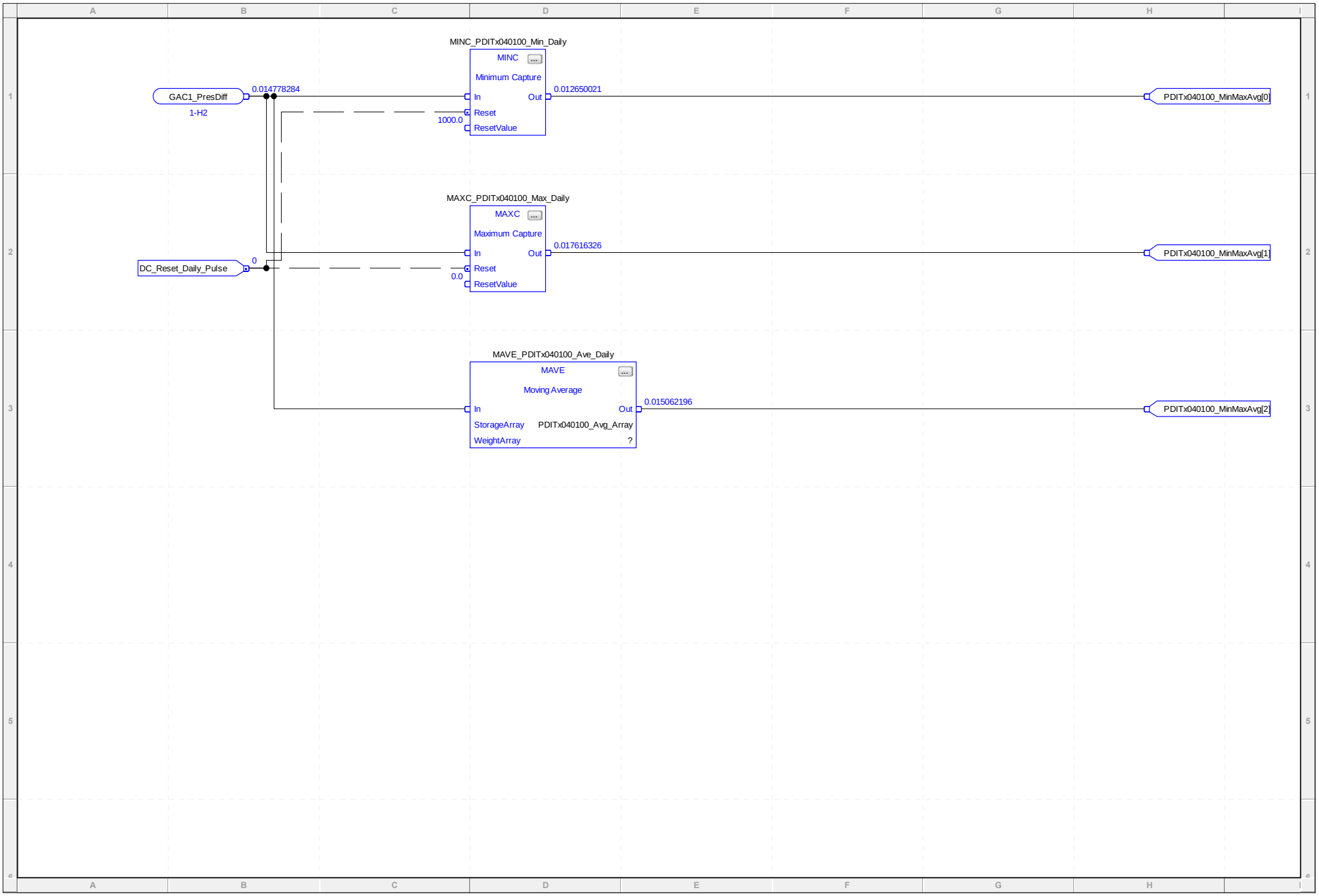
MINC_PDITx040100_Min_Daily
MINC
Minimum Capture
GAC1_PresDiff
1-H2
0.014778284
In
Out
0.012650021
Reset
1000.0
ResetValue
PDITx040100_MinMaxAvg[0]
MAXC_PDITx040100_Max_Daily
MAXC
Maximum Capture
DC_Reset_Daily_Pulse
0
In
Out
0.017616326
Reset
0.0
ResetValue
PDITx040100_MinMaxAvg[1]
MAVE_PDITx040100_Ave_Daily
MAVE
Moving Average
In
Out
0.015062196
StorageArray
PDITx040100_Avg_Array
WeightArray
?
PDITx040100_MinMaxAvg[2]

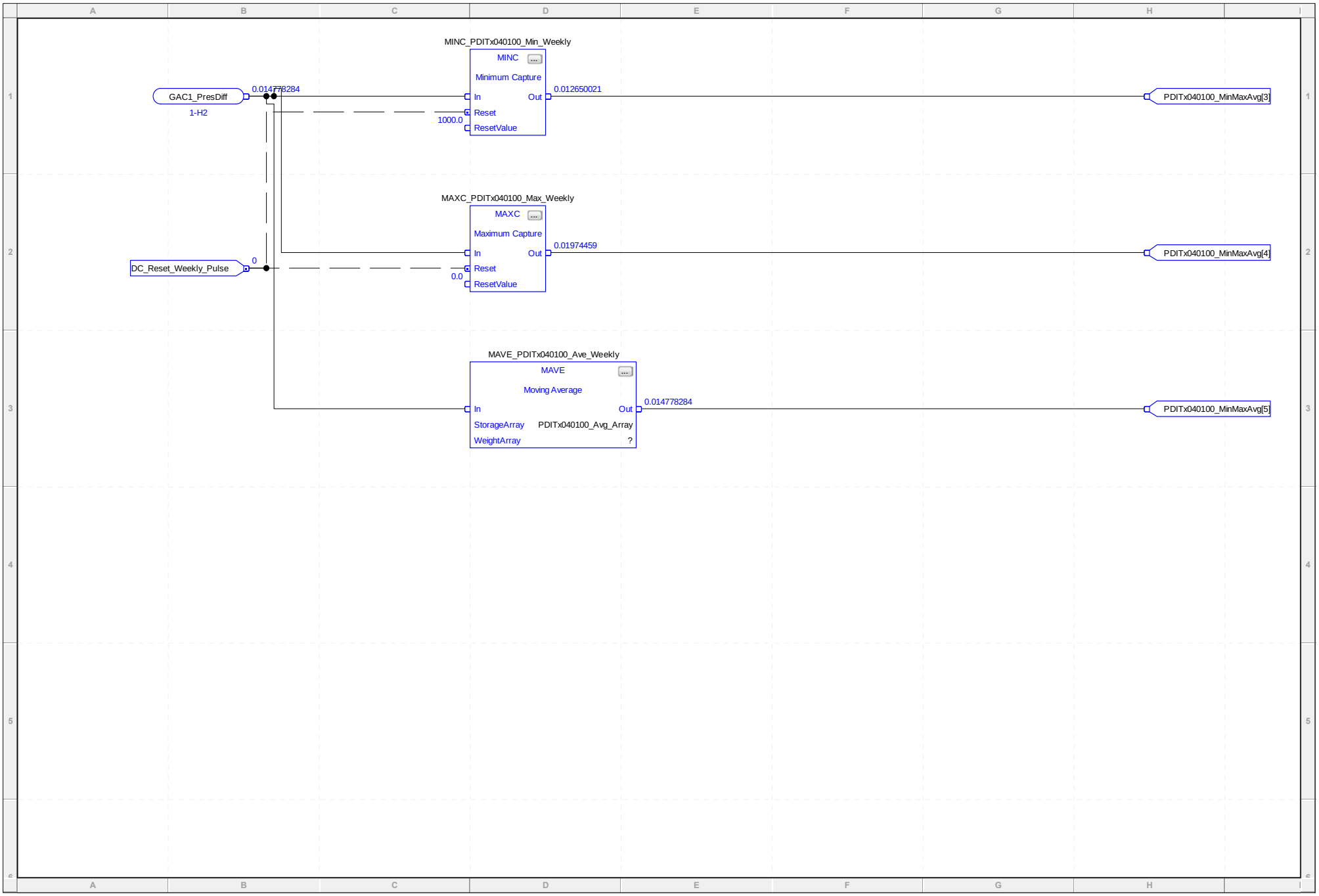
MINC_PDITx040100_Min_Weekly
MINC
Minimum Capture
GAC1_PresDiff
1-H2
0.014778284
In
Out
0.012650021
Reset
1000.0
ResetValue
PDITx040100_MinMaxAvg[3]
MAXC_PDITx040100_Max_Weekly
MAXC
Maximum Capture
DC_Reset_Weekly_Pulse
0
In
Out
0.01974459
Reset
0.0
ResetValue
PDITx040100_MinMaxAvg[4]
MAVE_PDITx040100_Ave_Weekly
MAVE
Moving Average
In
Out
0.014778284
StorageArray
PDITx040100_Avg_Array
WeightArray
?
PDITx040100_MinMaxAvg[5]

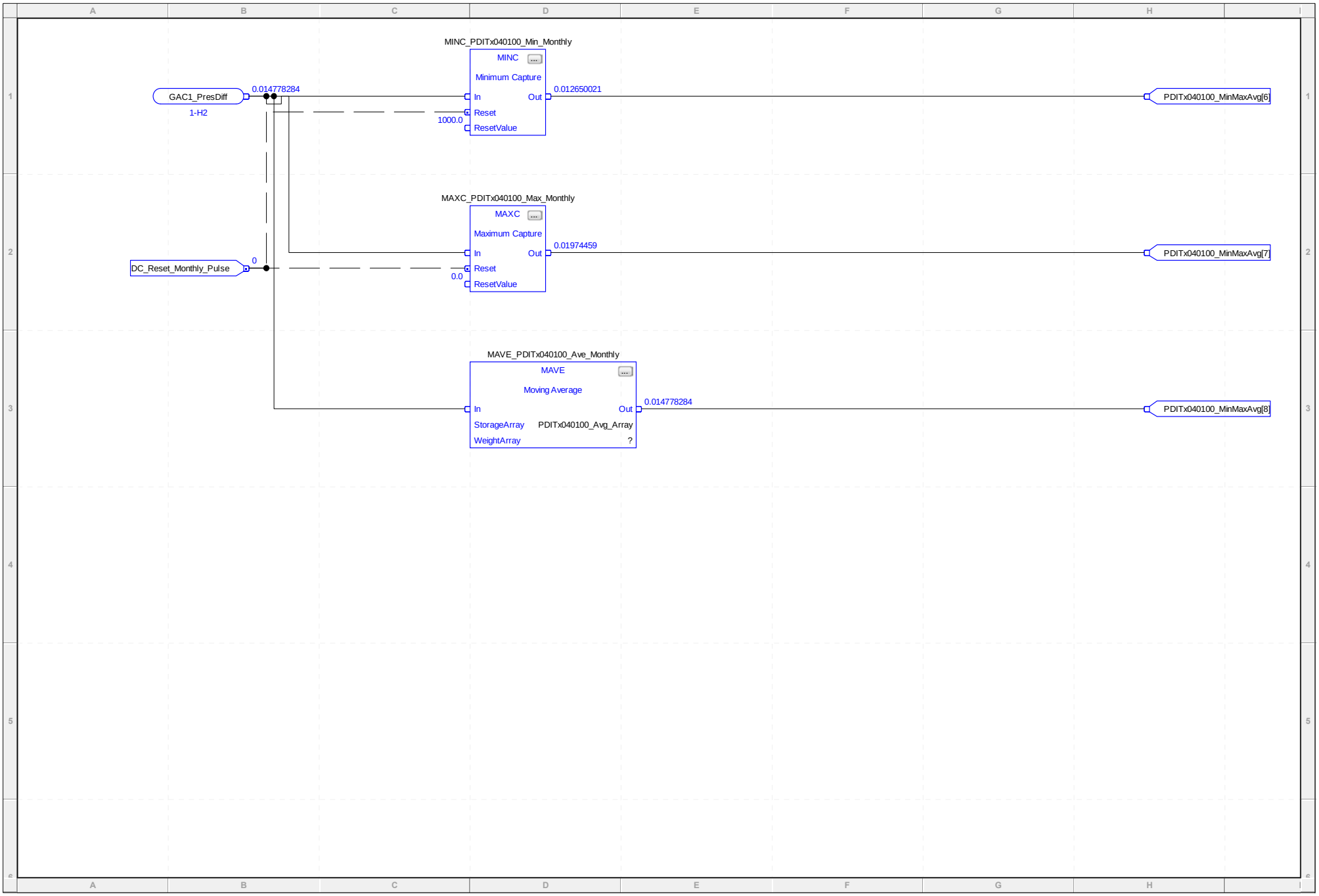
MINC_PDITx040100_Min_Monthly
MINC
Minimum Capture
GAC1_PresDiff
1-H2
0.014778284
In
Out
0.012650021
Reset
1000.0
ResetValue
PDITx040100_MinMaxAvg[6]
MAXC_PDITx040100_Max_Monthly
MAXC
Maximum Capture
DC_Reset_Monthly_Pulse
0
In
Out
0.01974459
Reset
0.0
ResetValue
PDITx040100_MinMaxAvg[7]
MAVE_PDITx040100_Ave_Monthly
MAVE
Moving Average
In
Out
0.014778284
StorageArray
PDITx040100_Avg_Array
WeightArray
?
PDITx040100_MinMaxAvg[8]

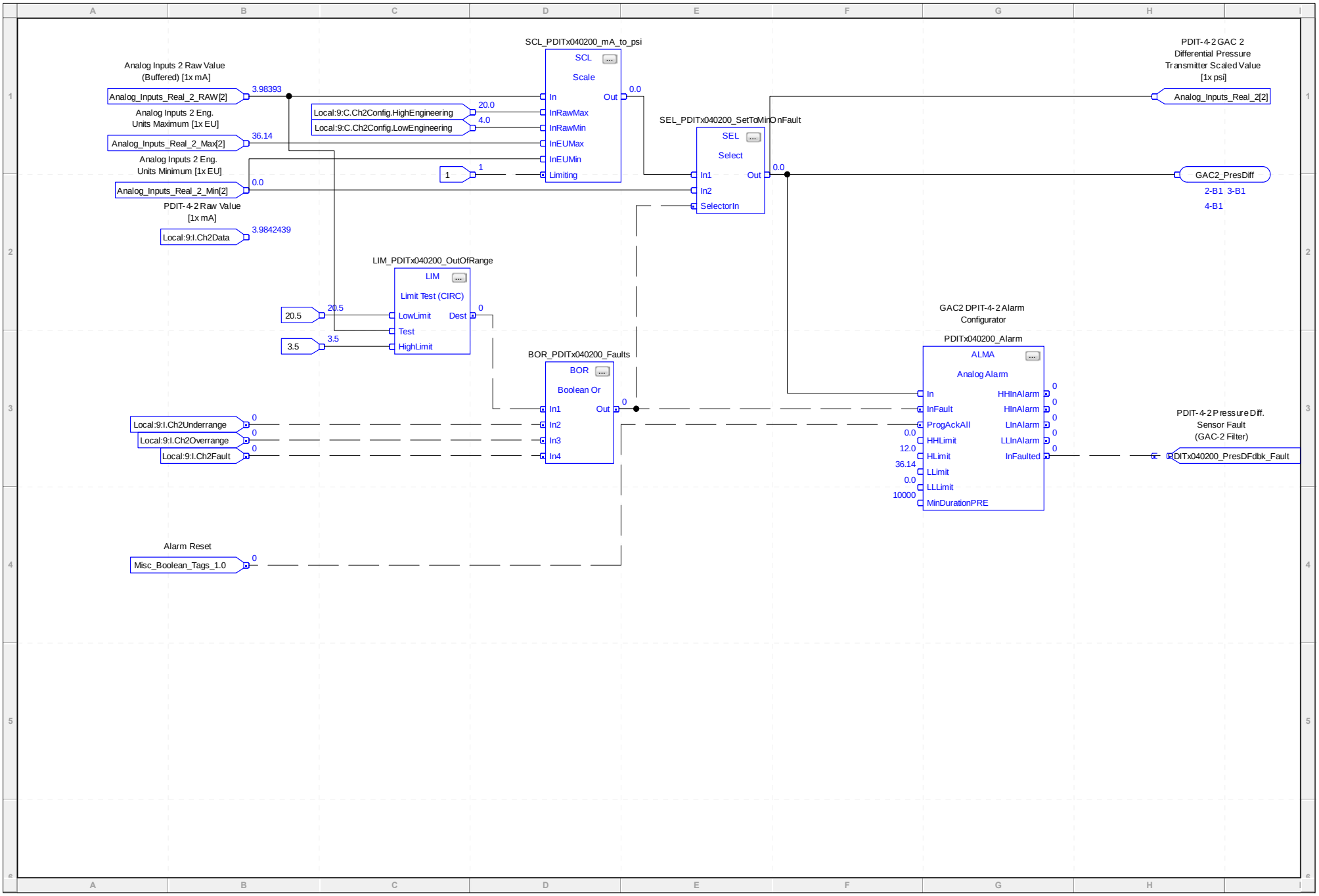
SCL_PDITx040200_mA_to_psi
SCL
Scale
Analog Inputs 2 Raw Value (Buffered) [1x mA]
Analog_Inputs_Real_2_RAW[2]
3.98393
Analog Inputs 2 Eng. Units Maximum [1x EU]
Analog_Inputs_Real_2_Max[2]
36.14
Analog Inputs 2 Eng. Units Minimum [1x EU]
Analog_Inputs_Real_2_Min[2]
0.0
PDIT-4-2 Raw Value [1x mA]
Local:9:I.Ch2Data
3.9842439
Local:9:C.Ch2Config.HighEngineering
20.0
Local:9:C.Ch2Config.LowEngineering
4.0
1
In
InRawMax
InRawMin
InEUMax
InEUMin
Limiting
Out
SEL_PDITx040200_SetToMinOnFault
SEL
Select
In1
In2
SelectorIn
PDIT-4-2 GAC 2 Differential Pressure Transmitter Scaled Value [1x psi]
Analog_Inputs_Real_2[2]
GAC2_PresDiff
2-B1 3-B1
4-B1
LIM_PDITx040200_OutOfRange
LIM
Limit Test (CIRC)
20.5
3.5
LowLimit
Test
HighLimit
Dest
BOR_PDITx040200_Faults
BOR
Boolean Or
Local:9:I.Ch2Underrange
Local:9:I.Ch2Overrange
Local:9:I.Ch2Fault
In1
In2
In3
In4
GAC2 DPIT-4-2 Alarm Configurator
PDITx040200_Alarm
ALMA
Analog Alarm
In
InFault
ProgAckAll
HHLimit
HLimit
LLimit
LLLimit
MinDurationPRE
HHInAlarm
HInAlarm
LInAlarm
LLInAlarm
InFaulted
12.0
36.14
10000
PDIT-4-2 Pressure Diff. Sensor Fault (GAC-2 Filter)
PDITx040200_PresDFdbk_Fault
Alarm Reset
Misc_Boolean_Tags_1.0

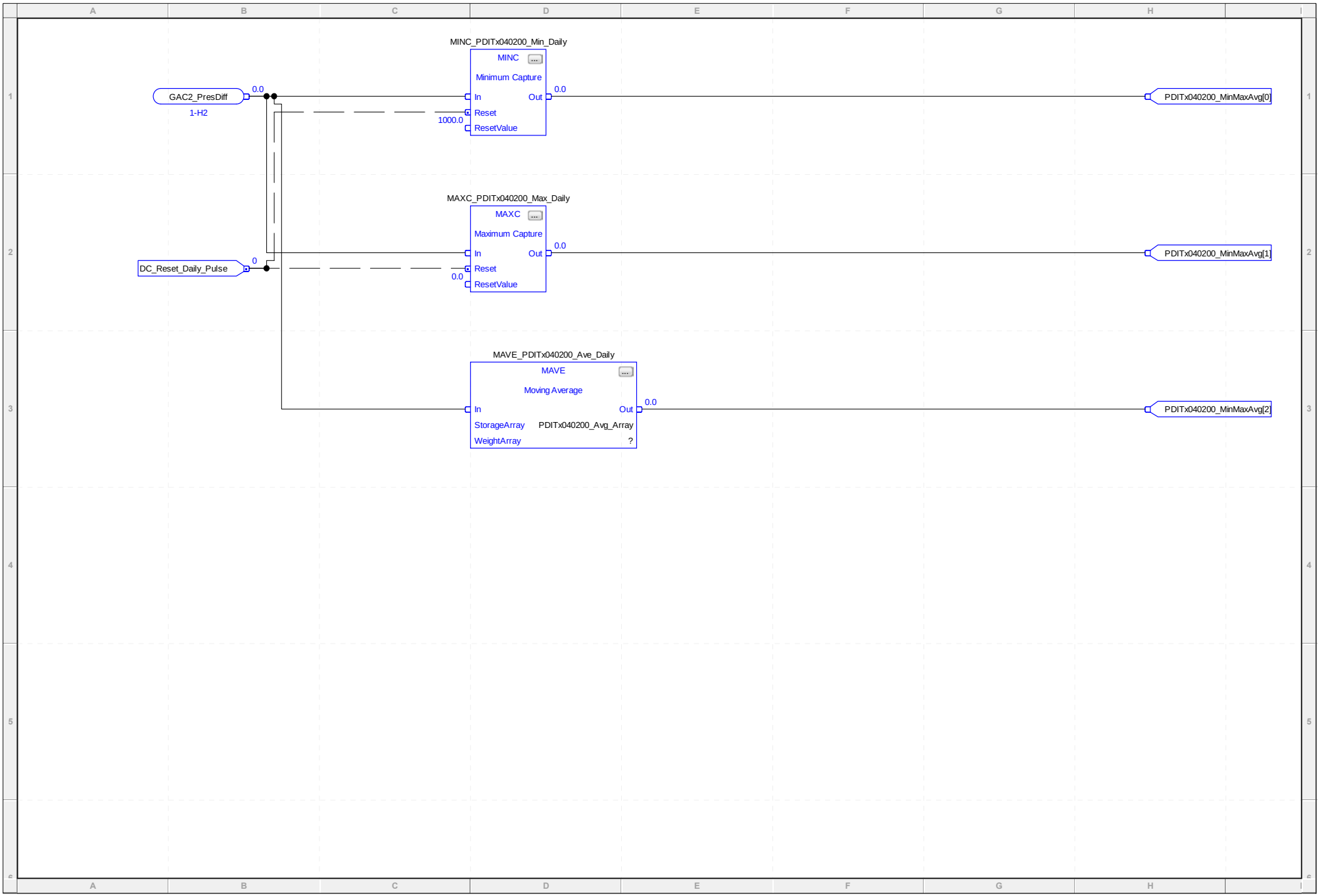
MINC_PDITx040200_Min_Daily
MINC
Minimum Capture
GAC2_PresDiff
0.0
1-H2
In
Out
0.0
Reset
1000.0
ResetValue
PDITx040200_MinMaxAvg[0]
MAXC_PDITx040200_Max_Daily
MAXC
Maximum Capture
DC_Reset_Daily_Pulse
0
In
Out
0.0
Reset
0.0
ResetValue
PDITx040200_MinMaxAvg[1]
MAVE_PDITx040200_Ave_Daily
MAVE
Moving Average
In
Out
0.0
StorageArray
PDITx040200_Avg_Array
WeightArray
?
PDITx040200_MinMaxAvg[2]

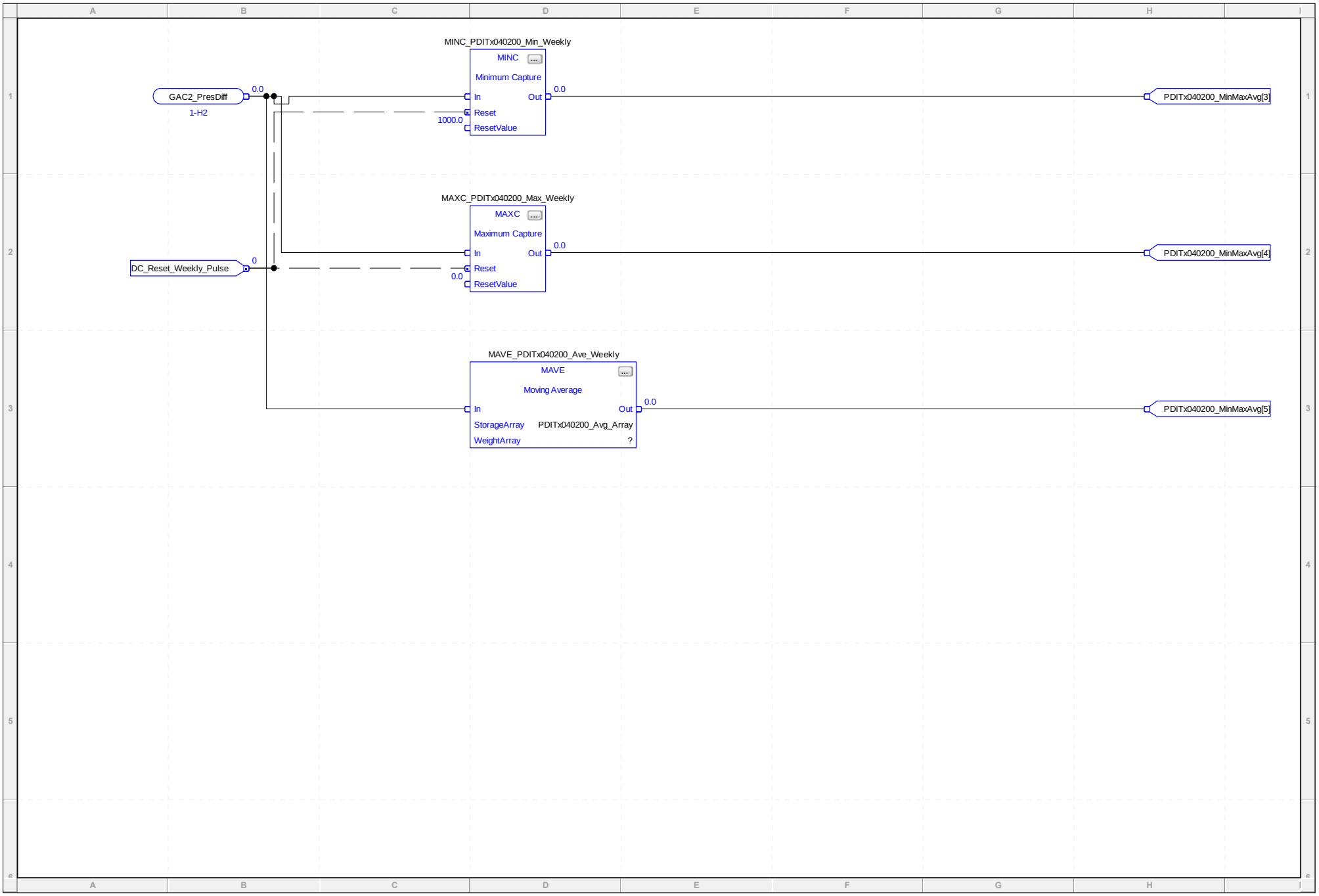
MINC_PDITx040200_Min_Weekly
MINC
Minimum Capture
GAC2_PresDiff
0.0
1-H2
In
Out
0.0
Reset
1000.0
ResetValue
PDITx040200_MinMaxAvg[3]
MAXC_PDITx040200_Max_Weekly
MAXC
Maximum Capture
DC_Reset_Weekly_Pulse
0
In
Out
0.0
Reset
0.0
ResetValue
PDITx040200_MinMaxAvg[4]
MAVE_PDITx040200_Ave_Weekly
MAVE
Moving Average
In
Out
0.0
StorageArray
PDITx040200_Avg_Array
WeightArray
?
PDITx040200_MinMaxAvg[5]

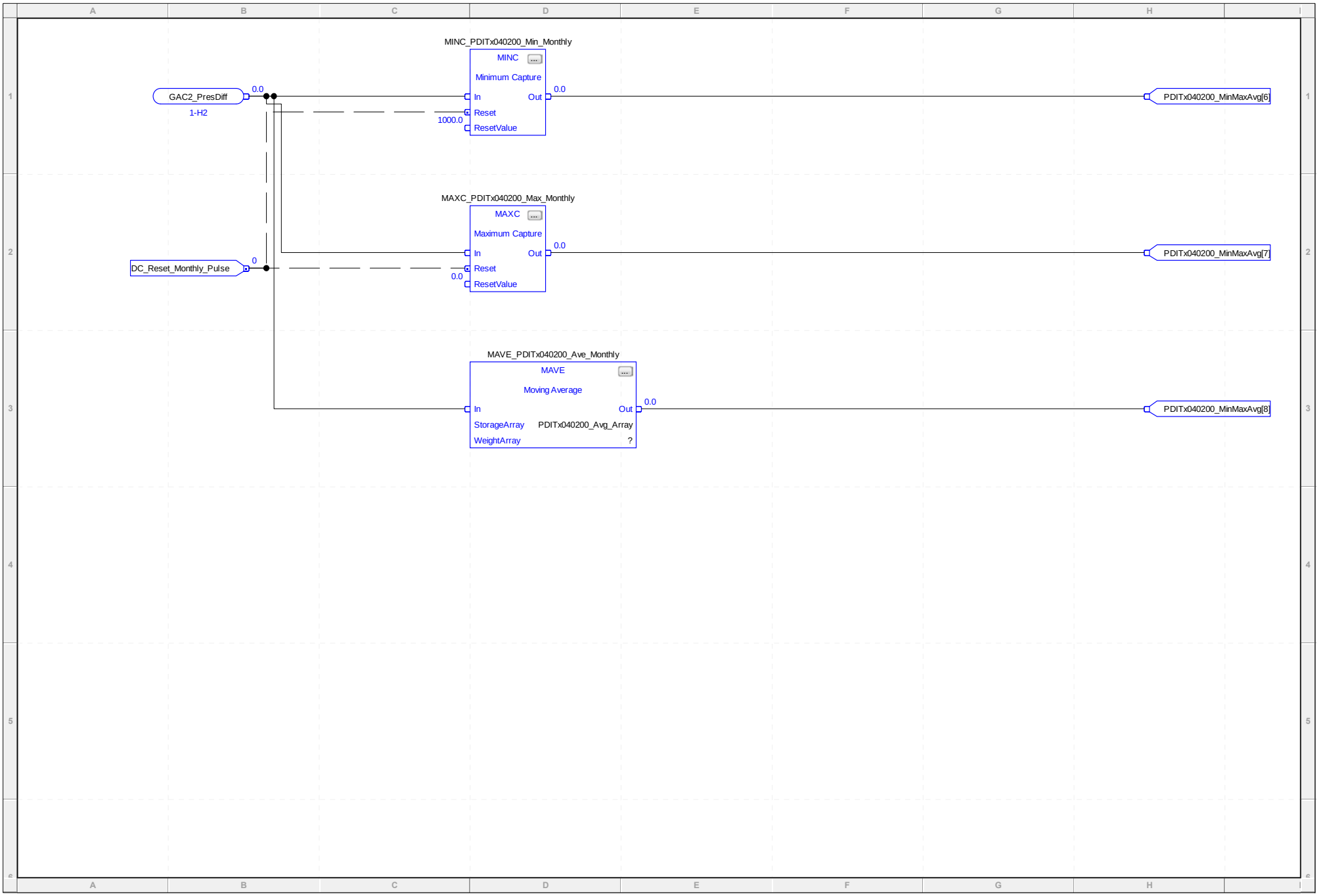
MINC_PDITx040200_Min_Monthly
MINC
Minimum Capture
GAC2_PresDiff
0.0
1-H2
In
Out
0.0
Reset
1000.0
ResetValue
PDITx040200_MinMaxAvg[6]
MAXC_PDITx040200_Max_Monthly
MAXC
Maximum Capture
DC_Reset_Monthly_Pulse
0
In
Out
0.0
Reset
0.0
ResetValue
PDITx040200_MinMaxAvg[7]
MAVE_PDITx040200_Ave_Monthly
MAVE
Moving Average
In
Out
0.0
StorageArray
PDITx040200_Avg_Array
WeightArray
?
PDITx040200_MinMaxAvg[8]

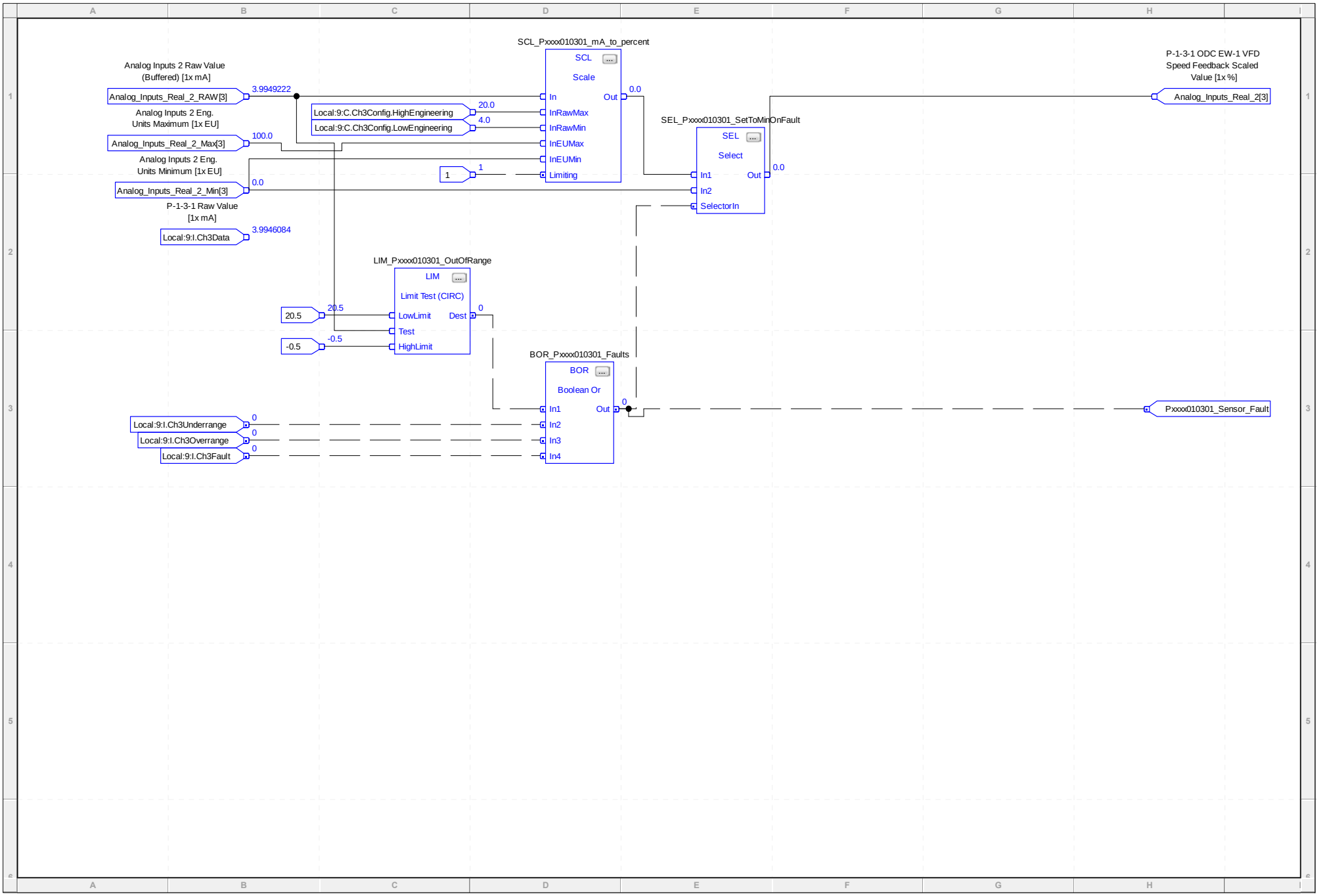
SCL_Pxxxx010301_mA_to_percent
SCL
Scale
Analog Inputs 2 Raw Value (Buffered) [1x mA]
Analog_Inputs_Real_2_RAW[3]
3.9949222
Analog Inputs 2 Eng. Units Maximum [1x EU]
Analog_Inputs_Real_2_Max[3]
100.0
Analog Inputs 2 Eng. Units Minimum [1x EU]
Analog_Inputs_Real_2_Min[3]
0.0
P-1-3-1 Raw Value [1x mA]
Local:9:I.Ch3Data
3.9946084
Local:9:C.Ch3Config.HighEngineering
20.0
Local:9:C.Ch3Config.LowEngineering
4.0
1
In
InRawMax
InRawMin
InEUMax
InEUMin
Limiting
Out
0.0
SEL_Pxxxx010301_SetToMinOnFault
SEL
Select
In1
In2
SelectorIn
P-1-3-1 ODC EW-1 VFD Speed Feedback Scaled Value [1x %]
Analog_Inputs_Real_2[3]
LIM_Pxxxx010301_OutOfRange
LIM
Limit Test (CIRC)
20.5
LowLimit
Test
-0.5
HighLimit
Dest
0
BOR_Pxxxx010301_Faults
BOR
Boolean Or
Local:9:I.Ch3Underrange
Local:9:I.Ch3Overrange
Local:9:I.Ch3Fault
In1
In2
In3
In4
Pxxxx010301_Sensor_Fault

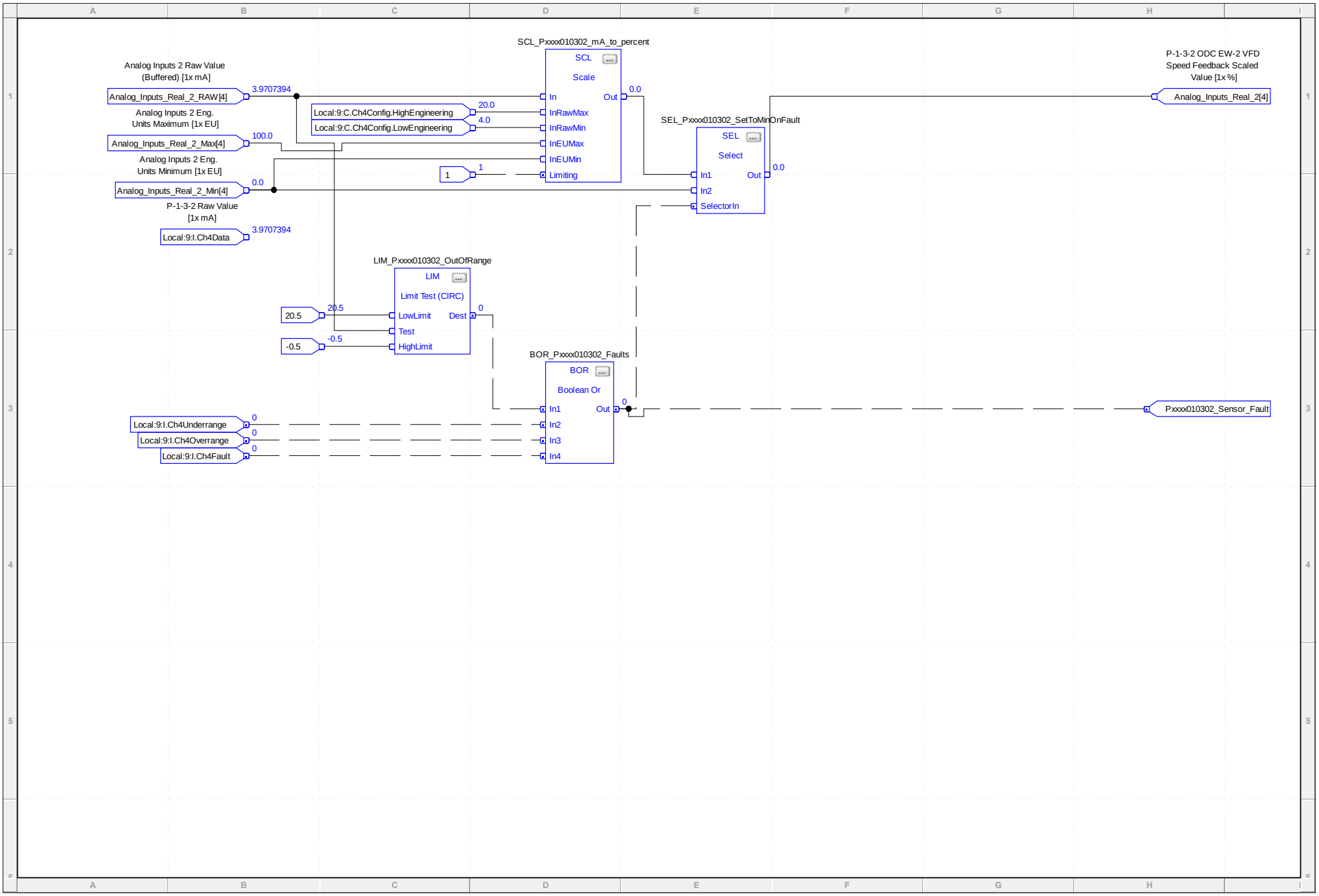
SCL_Pxxxx010302_mA_to_percent
SCL
Scale
Analog Inputs 2 Raw Value (Buffered) [1x mA]
Analog_Inputs_Real_2_RAW[4]
3.9707394
Analog Inputs 2 Eng. Units Maximum [1x EU]
Analog_Inputs_Real_2_Max[4]
100.0
Analog Inputs 2 Eng. Units Minimum [1x EU]
Analog_Inputs_Real_2_Min[4]
0.0
P-1-3-2 Raw Value [1x mA]
Local:9:I.Ch4Data
3.9707394
Local:9:C.Ch4Config.HighEngineering
20.0
Local:9:C.Ch4Config.LowEngineering
4.0
1
1
In
InRawMax
InRawMin
InEUMax
InEUMin
Limiting
Out
0.0
SEL_Pxxxx010302_SetToMinOnFault
SEL
Select
In1
In2
SelectorIn
Out
0.0
P-1-3-2 ODC EW-2 VFD Speed Feedback Scaled Value [1x %]
Analog_Inputs_Real_2[4]
LIM_Pxxxx010302_OutOfRange
LIM
Limit Test (CIRC)
20.5
20.5
-0.5
-0.5
LowLimit
Test
HighLimit
Dest
0
BOR_Pxxxx010302_Faults
BOR
Boolean Or
Local:9:I.Ch4Underrange
Local:9:I.Ch4Overrange
Local:9:I.Ch4Fault
0
0
0
In1
In2
In3
In4
Out
0
Pxxxx010302_Sensor_Fault

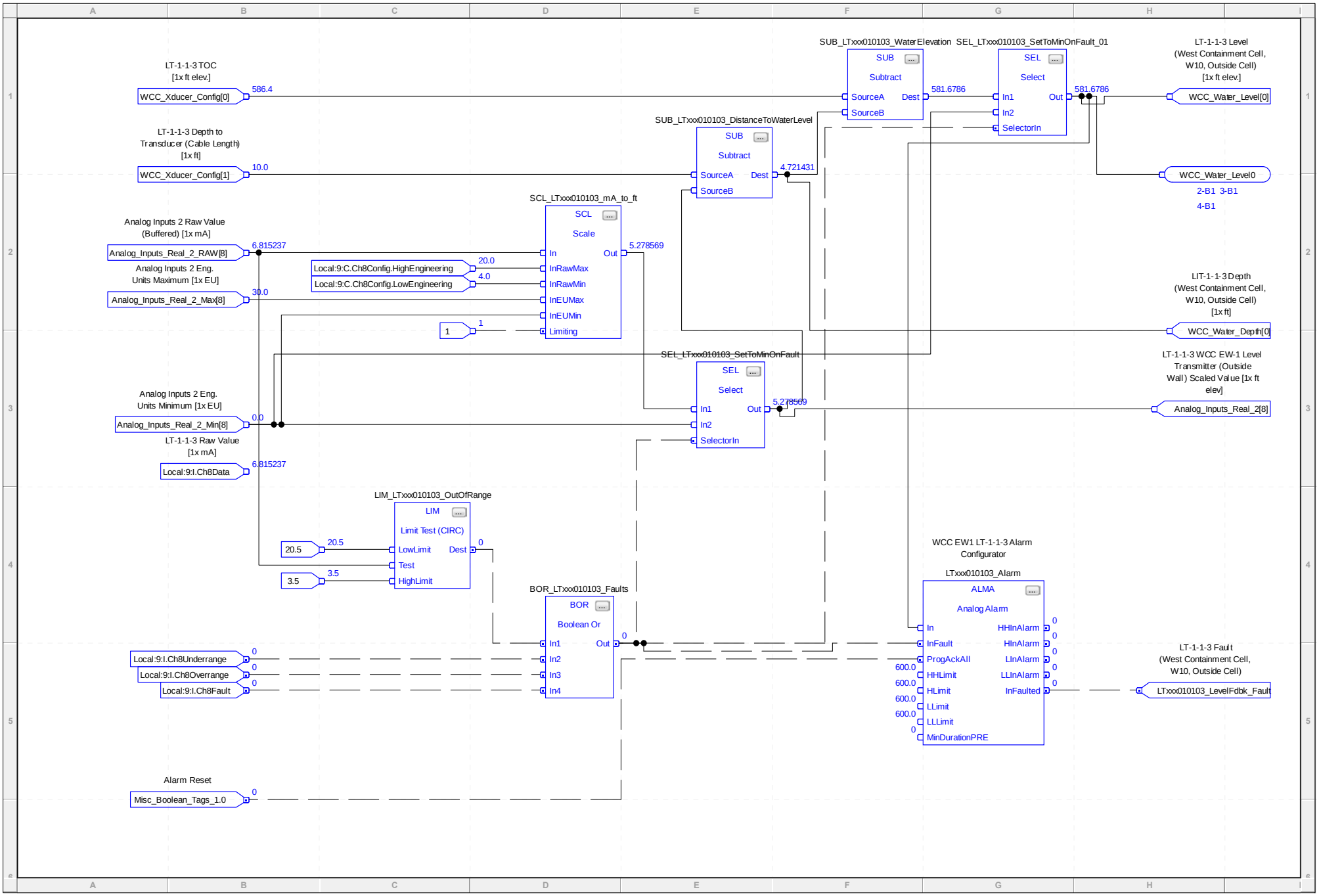
LT-1-1-3 TOC [1x ft elev.]
WCC_Xducer_Config[0]
586.4
LT-1-1-3 Depth to Transducer (Cable Length) [1x ft]
WCC_Xducer_Config[1]
10.0
Analog Inputs 2 Raw Value (Buffered) [1x mA]
Analog_Inputs_Real_2_RAW[8]
6.815237
Analog Inputs 2 Eng. Units Maximum [1x EU]
Analog_Inputs_Real_2_Max[8]
30.0
Analog Inputs 2 Eng. Units Minimum [1x EU]
Analog_Inputs_Real_2_Min[8]
0.0
LT-1-1-3 Raw Value [1x mA]
Local:9:I.Ch8Data
6.815237
SCL_LTxxx010103_mA_to_ft
SCL
Scale
In
Out
InRawMax
InRawMin
InEUMax
InEUMin
Limiting
5.278569
Local:9:C.Ch8Config.HighEngineering
20.0
Local:9:C.Ch8Config.LowEngineering
4.0
1
SUB_LTxxx010103_WaterElevation
SUB
Subtract
SourceA
SourceB
Dest
581.6786
SEL_LTxxx010103_SetToMinOnFault_01
SEL
Select
In1
In2
SelectorIn
Out
581.6786
LT-1-1-3 Level (West Containment Cell, W10, Outside Cell) [1x ft elev.]
WCC_Water_Level[0]
SUB_LTxxx010103_DistanceToWaterLevel
4.721431
WCC_Water_Level0
2-B1 3-B1
4-B1
LIT-1-1-3 Depth (West Containment Cell, W10, Outside Cell) [1x ft]
WCC_Water_Depth[0]
SEL_LTxxx010103_SetToMinOnFault
LT-1-1-3 WCC EW-1 Level Transmitter (Outside Wall) Scaled Value [1x ft elev]
Analog_Inputs_Real_2[8]
LIM_LTxxx010103_OutOfRange
LIM
Limit Test (CIRC)
LowLimit
Test
HighLimit
Dest
20.5
3.5
BOR_LTxxx010103_Faults
BOR
Boolean Or
Local:9:I.Ch8Underrange
Local:9:I.Ch8Overrange
Local:9:I.Ch8Fault
WCC EW1 LT-1-1-3 Alarm Configurator
LTxxx010103_Alarm
ALMA
Analog Alarm
In
InFault
ProgAckAll
HHLimit
HLimit
LLimit
LLLimit
MinDurationPRE
HHInAlarm
HInAlarm
LInAlarm
LLInAlarm
InFaulted
600.0
LT-1-1-3 Fault (West Containment Cell, W10, Outside Cell)
LTxxx010103_LevelFdbk_Fault
Alarm Reset
Misc_Boolean_Tags_1.0

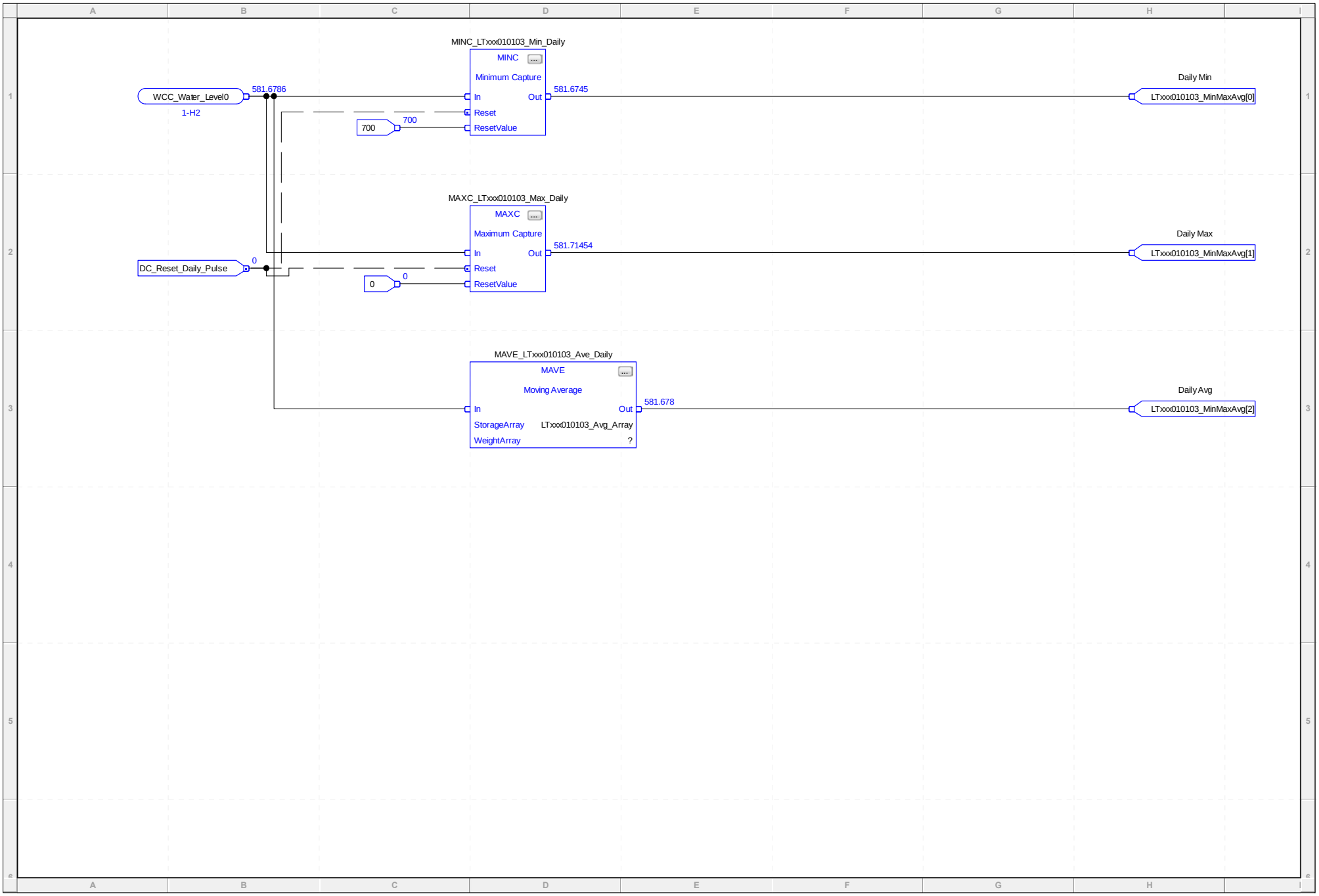
MINC_LTxxx010103_Min_Daily
MINC
Minimum Capture
WCC_Water_Level0
1-H2
581.6786
In
Out
581.6745
Reset
700
700
ResetValue
Daily Min
LTxxx010103_MinMaxAvg[0]
MAXC_LTxxx010103_Max_Daily
MAXC
Maximum Capture
DC_Reset_Daily_Pulse
0
In
Out
581.71454
Reset
0
0
ResetValue
Daily Max
LTxxx010103_MinMaxAvg[1]
MAVE_LTxxx010103_Ave_Daily
MAVE
Moving Average
In
Out
581.678
StorageArray
LTxxx010103_Avg_Array
WeightArray
?
Daily Avg
LTxxx010103_MinMaxAvg[2]

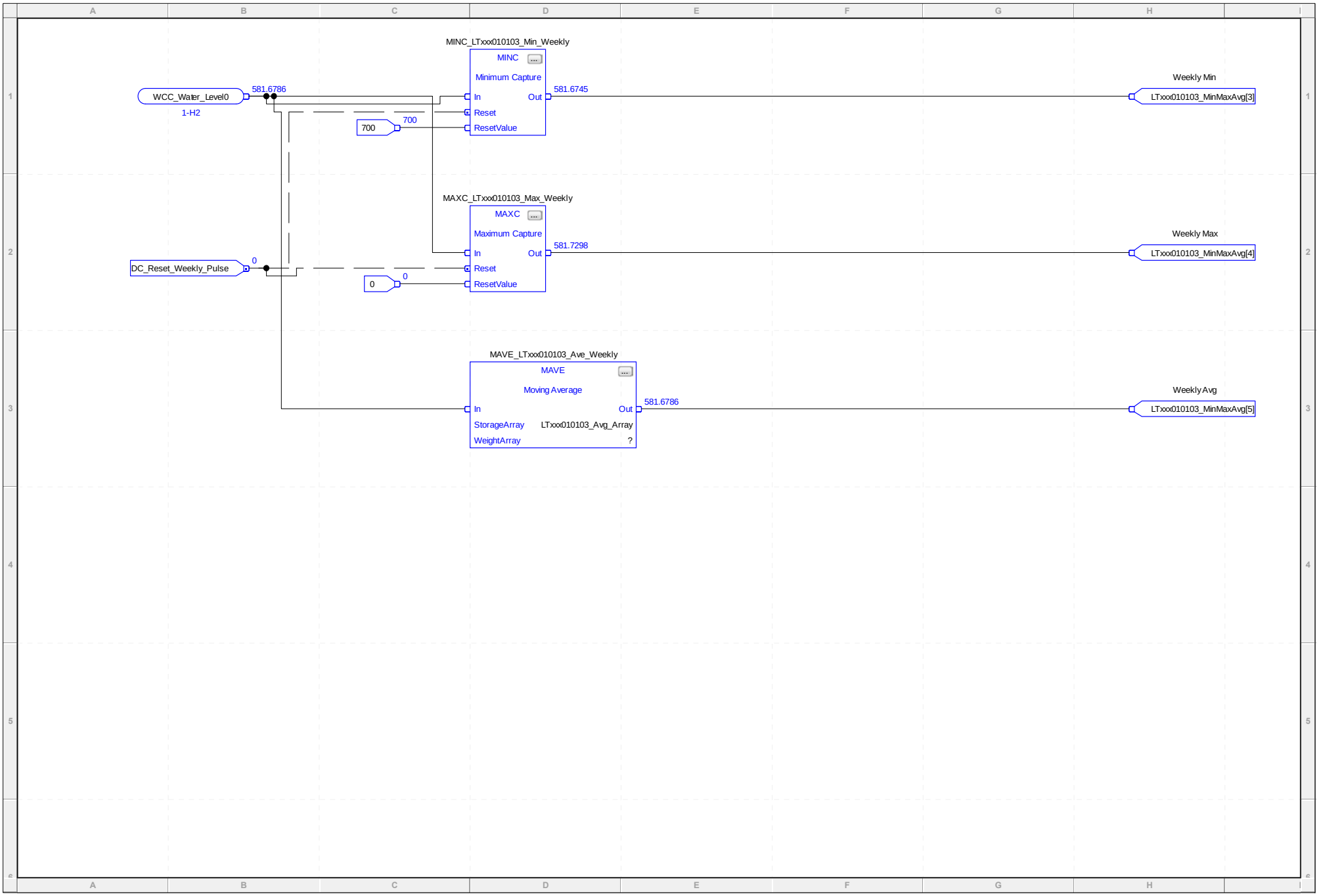
MINC_LTxxx010103_Min_Weekly
MINC
Minimum Capture
WCC_Water_Level0
1-H2
581.6786
In
Out
581.6745
Reset
700
700
ResetValue
Weekly Min
LTxxx010103_MinMaxAvg[3]
MAXC_LTxxx010103_Max_Weekly
MAXC
Maximum Capture
DC_Reset_Weekly_Pulse
0
In
Out
581.7298
Reset
0
0
ResetValue
Weekly Max
LTxxx010103_MinMaxAvg[4]
MAVE_LTxxx010103_Ave_Weekly
MAVE
Moving Average
In
Out
581.6786
StorageArray
LTxxx010103_Avg_Array
WeightArray
?
Weekly Avg
LTxxx010103_MinMaxAvg[5]

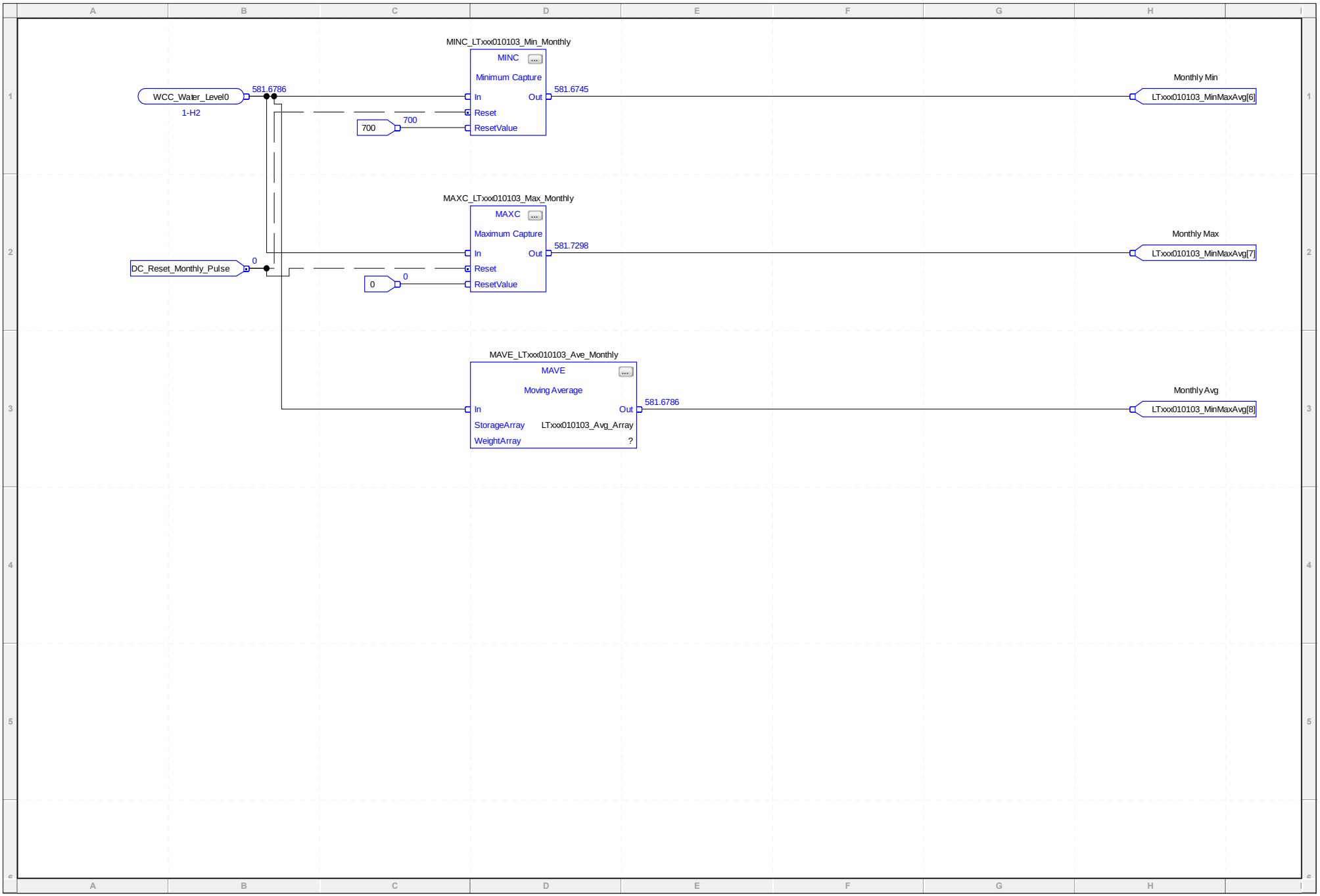
MINC_LTxxx010103_Min_Monthly
MINC
Minimum Capture
WCC_Water_Level0
1-H2
581.6786
In
Out
581.6745
Reset
700
700
ResetValue
Monthly Min
LTxxx010103_MinMaxAvg[6]
MAXC_LTxxx010103_Max_Monthly
MAXC
Maximum Capture
DC_Reset_Monthly_Pulse
0
In
Out
581.7298
Reset
0
0
ResetValue
Monthly Max
LTxxx010103_MinMaxAvg[7]
MAVE_LTxxx010103_Ave_Monthly
MAVE
Moving Average
In
Out
581.6786
StorageArray
LTxxx010103_Avg_Array
WeightArray
?
Monthly Avg
LTxxx010103_MinMaxAvg[8]

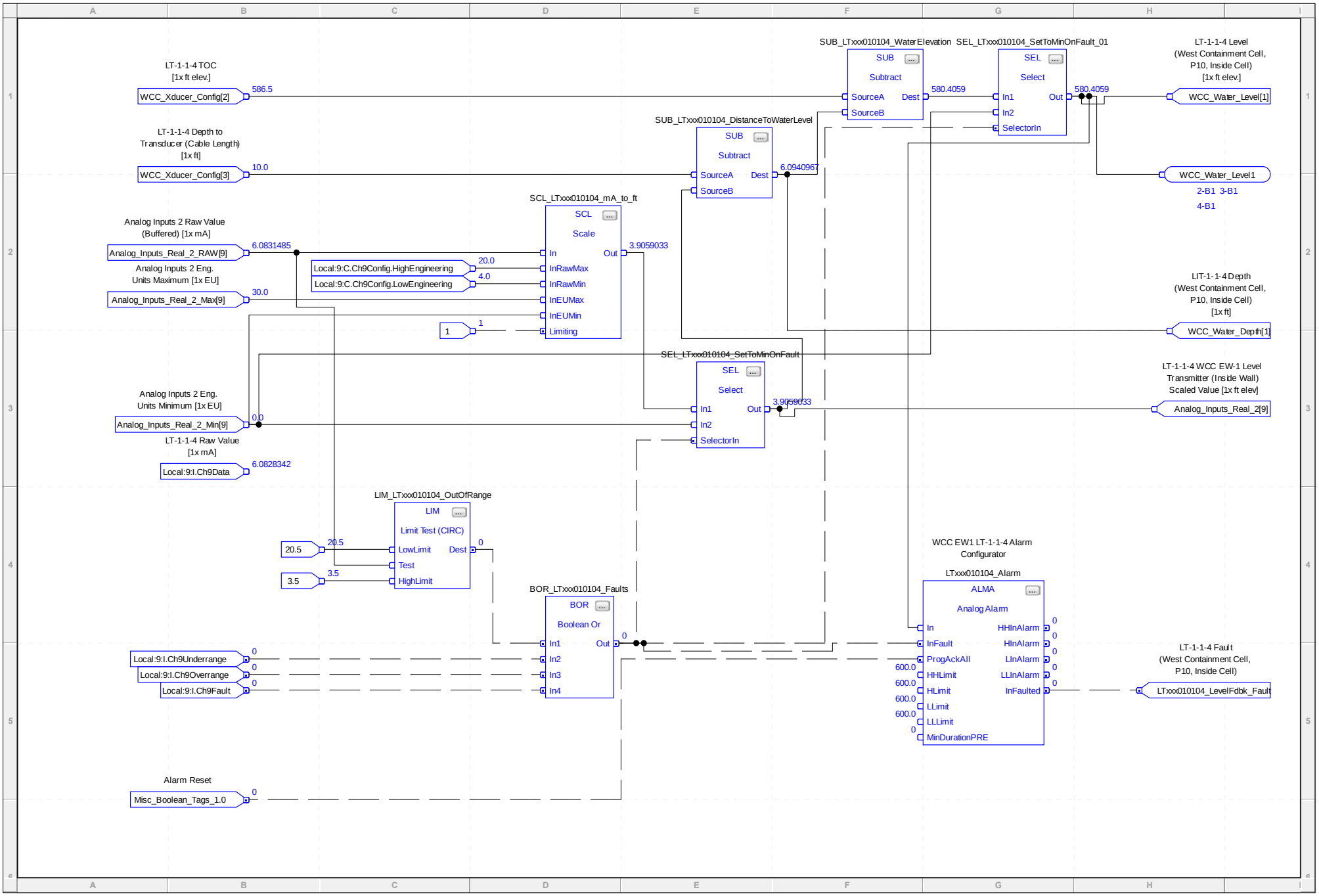
LT-1-1-4 TOC
[1x ft elev.]
WCC_Xducer_Config[2]
586.5
LT-1-1-4 Depth to
Transducer (Cable Length)
[1x ft]
WCC_Xducer_Config[3]
10.0
Analog Inputs 2 Raw Value
(Buffered) [1x mA]
Analog_Inputs_Real_2_RAW[9]
6.0831485
Analog Inputs 2 Eng.
Units Maximum [1x EU]
Analog_Inputs_Real_2_Max[9]
30.0
Analog Inputs 2 Eng.
Units Minimum [1x EU]
Analog_Inputs_Real_2_Min[9]
0.0
LT-1-1-4 Raw Value
[1x mA]
Local:9:I.Ch9Data
6.0828342
SCL_LTxxx010104_mA_to_ft
SCL
Scale
In
Out
3.9059033
InRawMax
InRawMin
InEUMax
InEUMin
Limiting
Local:9:C.Ch9Config.HighEngineering
20.0
Local:9:C.Ch9Config.LowEngineering
4.0
1
SUB_LTxxx010104_WaterElevation
SUB
Subtract
SourceA
SourceB
Dest
580.4059
SEL_LTxxx010104_SetToMinOnFault_01
SEL
Select
In1
In2
SelectorIn
Out
580.4059
LT-1-1-4 Level
(West Containment Cell,
P10, Inside Cell)
[1x ft elev.]
WCC_Water_Level[1]
SUB_LTxxx010104_DistanceToWaterLevel
6.0940967
WCC_Water_Level1
2-B1 3-B1
4-B1
LIT-1-1-4 Depth
(West Containment Cell,
P10, Inside Cell)
[1x ft]
WCC_Water_Depth[1]
SEL_LTxxx010104_SetToMinOnFault
3.9059033
LT-1-1-4 WCC EW-1 Level
Transmitter (Inside Wall)
Scaled Value [1x ft elev]
Analog_Inputs_Real_2[9]
LIM_LTxxx010104_OutOfRange
LIM
Limit Test (CIRC)
LowLimit
Test
HighLimit
Dest
20.5
3.5
BOR_LTxxx010104_Faults
BOR
Boolean Or
In1
In2
In3
In4
Out
Local:9:I.Ch9Underrange
Local:9:I.Ch9Overrange
Local:9:I.Ch9Fault
WCC EW1 LT-1-1-4 Alarm
Configurator
LTxxx010104_Alarm
ALMA
Analog Alarm
In
InFault
ProgAckAll
HHLimit
HLimit
LLimit
LLLimit
MinDurationPRE
HHInAlarm
HInAlarm
LInAlarm
LLInAlarm
InFaulted
600.0
LT-1-1-4 Fault
(West Containment Cell,
P10, Inside Cell)
LTxxx010104_LevelFdbk_Fault
Alarm Reset
Misc_Boolean_Tags_1.0

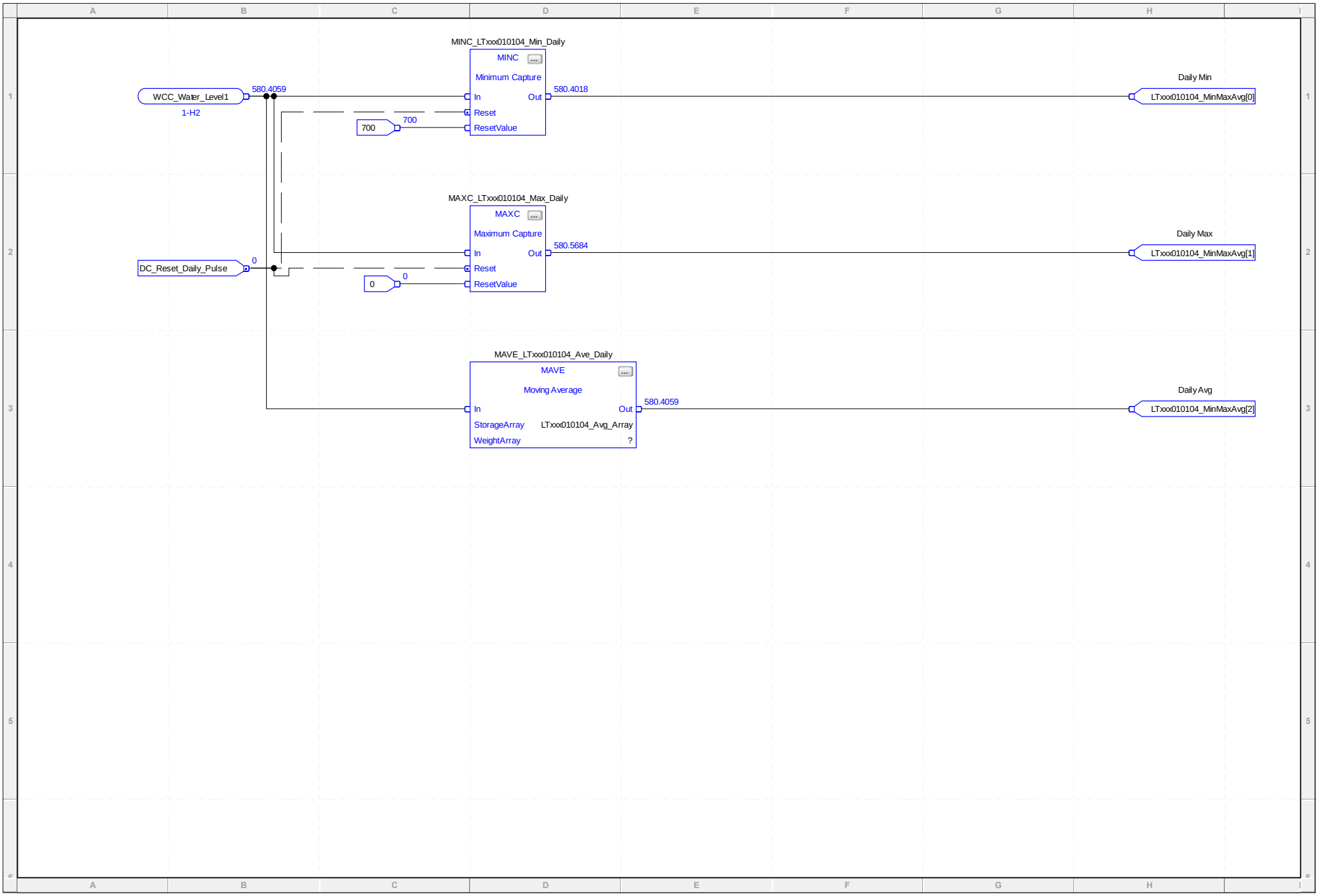
MINC_LTxxx010104_Min_Daily
MINC
Minimum Capture
WCC_Water_Level1
1-H2
580.4059
In
Out
580.4018
Reset
700
700
ResetValue
Daily Min
LTxxx010104_MinMaxAvg[0]
MAXC_LTxxx010104_Max_Daily
MAXC
Maximum Capture
DC_Reset_Daily_Pulse
0
In
Out
580.5684
Reset
0
0
ResetValue
Daily Max
LTxxx010104_MinMaxAvg[1]
MAVE_LTxxx010104_Ave_Daily
MAVE
Moving Average
In
Out
580.4059
StorageArray
LTxxx010104_Avg_Array
WeightArray
?
Daily Avg
LTxxx010104_MinMaxAvg[2]

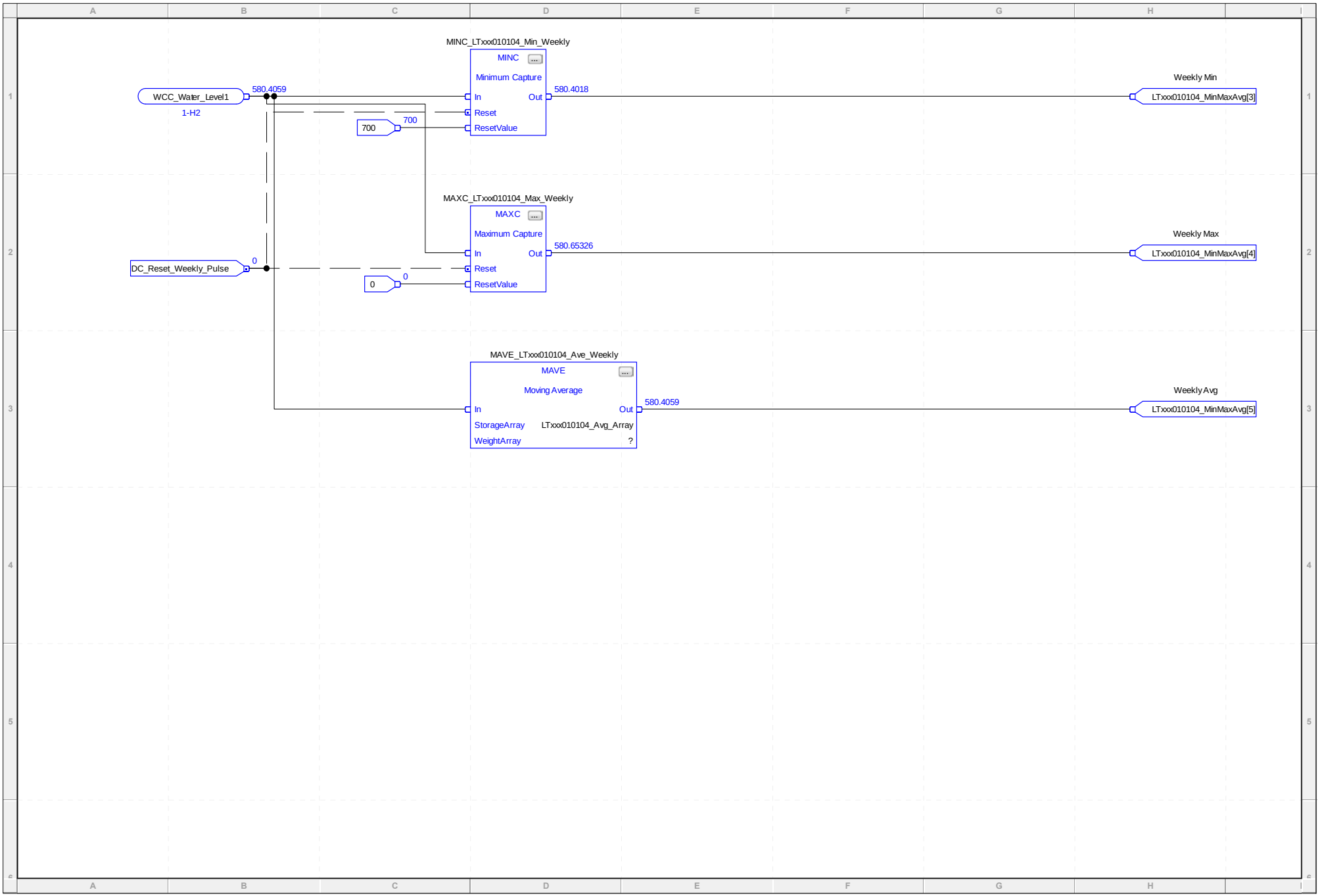
MINC_LTxxx010104_Min_Weekly
MINC
Minimum Capture
WCC_Water_Level1
1-H2
580.4059
In
Out
580.4018
Reset
700
700
ResetValue
Weekly Min
LTxxx010104_MinMaxAvg[3]
MAXC_LTxxx010104_Max_Weekly
MAXC
Maximum Capture
DC_Reset_Weekly_Pulse
0
In
Out
580.65326
Reset
0
0
ResetValue
Weekly Max
LTxxx010104_MinMaxAvg[4]
MAVE_LTxxx010104_Ave_Weekly
MAVE
Moving Average
In
Out
580.4059
StorageArray
LTxxx010104_Avg_Array
WeightArray
?
Weekly Avg
LTxxx010104_MinMaxAvg[5]

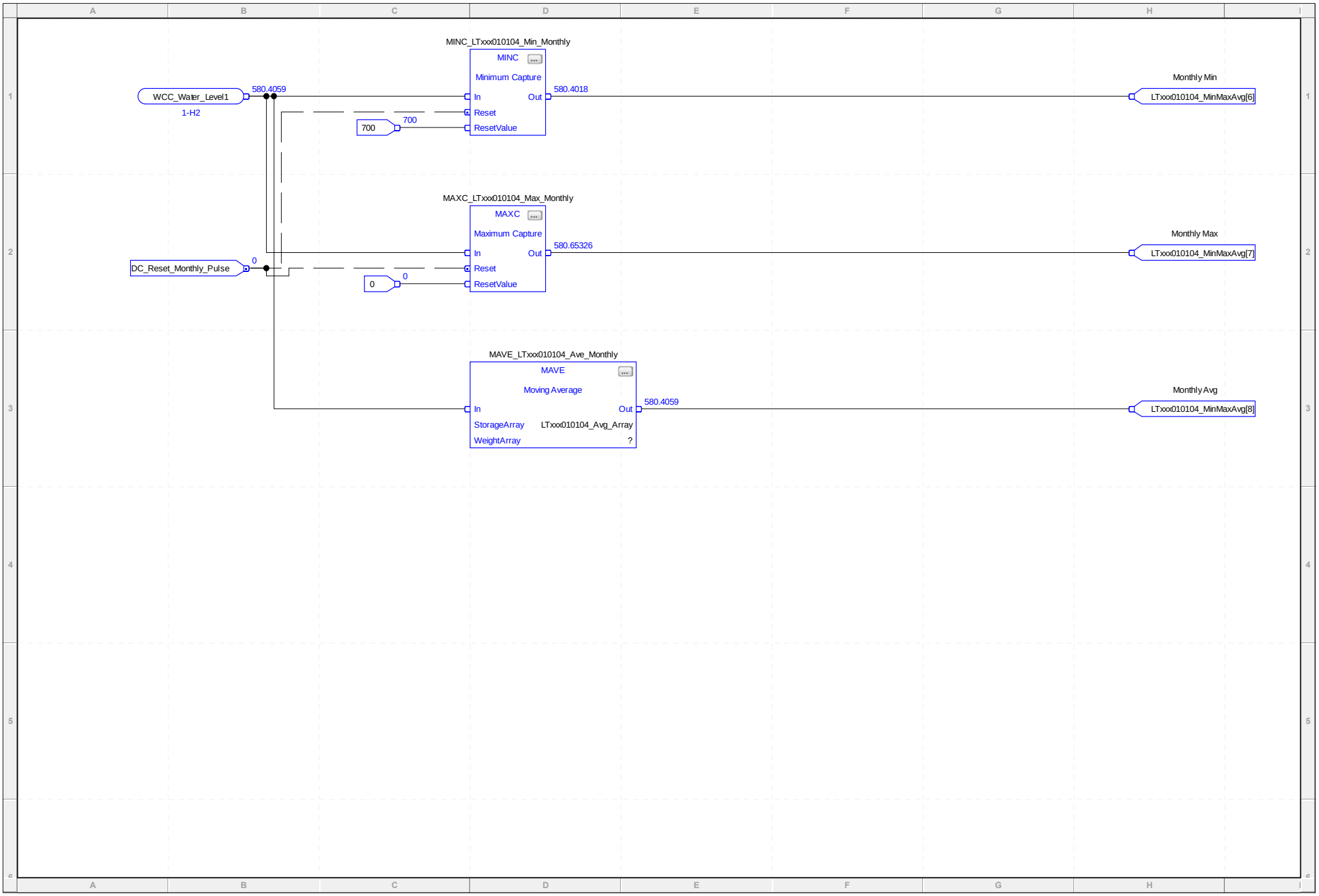
MINC_LTxxx010104_Min_Monthly
MINC
Minimum Capture
WCC_Water_Level1
1-H2
580.4059
In
Out
580.4018
Reset
700
700
ResetValue
Monthly Min
LTxxx010104_MinMaxAvg[6]
MAXC_LTxxx010104_Max_Monthly
MAXC
Maximum Capture
DC_Reset_Monthly_Pulse
0
In
Out
580.65326
Reset
0
0
ResetValue
Monthly Max
LTxxx010104_MinMaxAvg[7]
MAVE_LTxxx010104_Ave_Monthly
MAVE
Moving Average
In
Out
580.4059
StorageArray
LTxxx010104_Avg_Array
WeightArray
?
Monthly Avg
LTxxx010104_MinMaxAvg[8]

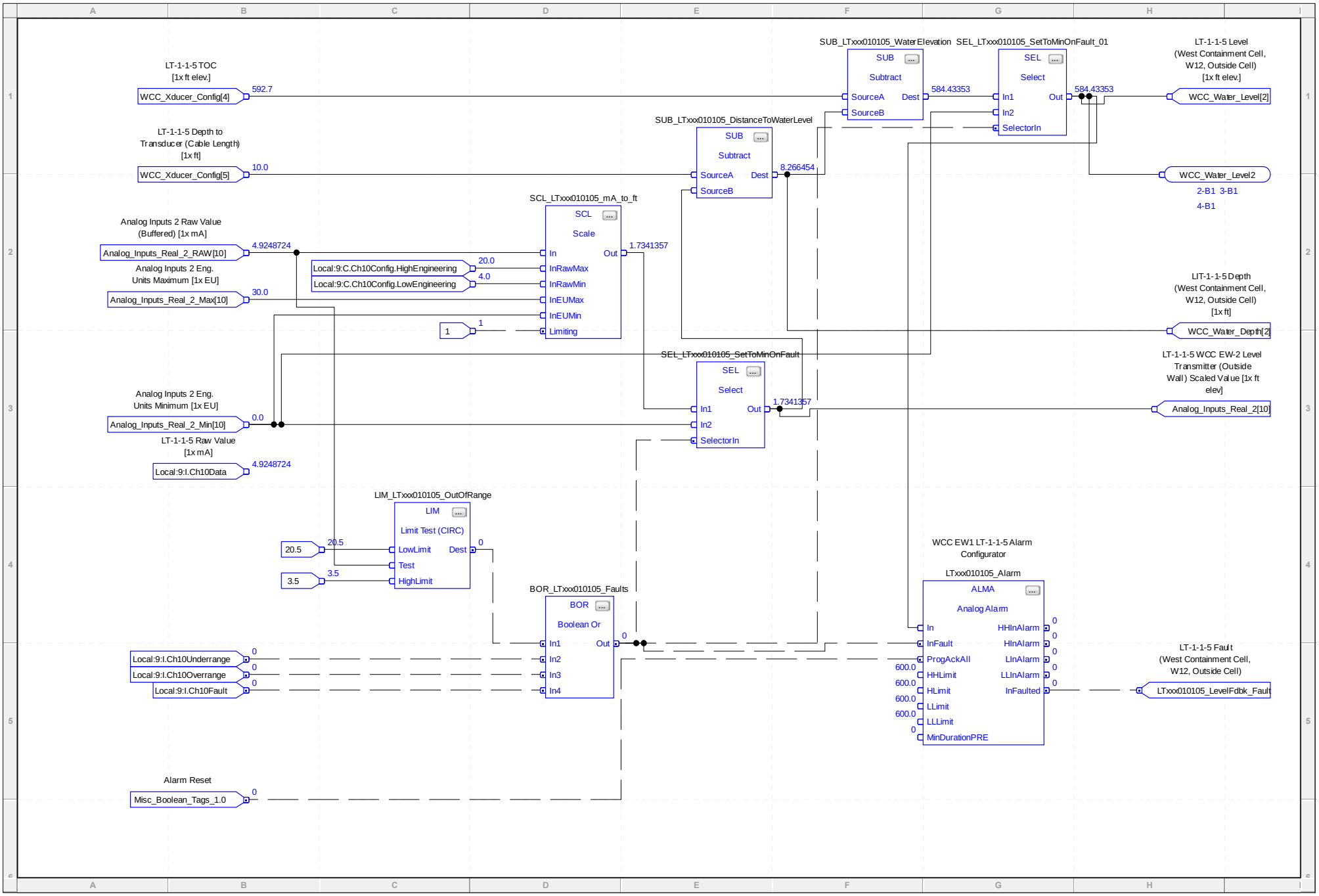
LT-1-1-5 TOC
[1x ft elev.]
WCC_Xducer_Config[4]
592.7
LT-1-1-5 Depth to
Transducer (Cable Length)
[1x ft]
WCC_Xducer_Config[5]
10.0
Analog Inputs 2 Raw Value
(Buffered) [1x mA]
Analog_Inputs_Real_2_RAW[10]
4.9248724
Analog Inputs 2 Eng.
Units Maximum [1x EU]
Analog_Inputs_Real_2_Max[10]
30.0
Analog Inputs 2 Eng.
Units Minimum [1x EU]
Analog_Inputs_Real_2_Min[10]
0.0
LT-1-1-5 Raw Value
[1x mA]
Local:9:I.Ch10Data
4.9248724
SCL_LTxxx010105_mA_to_ft
SCL
Scale
In
Out
InRawMax
InRawMin
InEUMax
InEUMin
Limiting
1.7341357
Local:9:C.Ch10Config.HighEngineering
20.0
Local:9:C.Ch10Config.LowEngineering
4.0
1
1
SUB_LTxxx010105_WaterElevation
SUB
Subtract
SourceA
SourceB
Dest
584.43353
SEL_LTxxx010105_SetToMinOnFault_01
SEL
Select
In1
In2
SelectorIn
Out
584.43353
LT-1-1-5 Level
(West Containment Cell,
W12, Outside Cell)
[1x ft elev.]
WCC_Water_Level[2]
SUB_LTxxx010105_DistanceToWaterLevel
SUB
Subtract
SourceA
SourceB
Dest
8.266454
WCC_Water_Level2
2-B1 3-B1
4-B1
LIT-1-1-5 Depth
(West Containment Cell,
W12, Outside Cell)
[1x ft]
WCC_Water_Depth[2]
SEL_LTxxx010105_SetToMinOnFault
SEL
Select
In1
In2
SelectorIn
Out
1.7341357
LT-1-1-5 WCC EW-2 Level
Transmitter (Outside
Wall) Scaled Value [1x ft
elev]
Analog_Inputs_Real_2[10]
LIM_LTxxx010105_OutOfRange
LIM
Limit Test (CIRC)
LowLimit
Test
HighLimit
Dest
20.5
20.5
3.5
3.5
0
BOR_LTxxx010105_Faults
BOR
Boolean Or
In1
In2
In3
In4
Out
0
Local:9:I.Ch10Underrange
0
Local:9:I.Ch10Overrange
0
Local:9:I.Ch10Fault
0
WCC EW1 LT-1-1-5 Alarm
Configurator
LTxxx010105_Alarm
ALMA
Analog Alarm
In
InFault
ProgAckAll
HHLimit
HLimit
LLimit
LLLimit
MinDurationPRE
HHInAlarm
HInAlarm
LInAlarm
LLInAlarm
InFaulted
600.0
600.0
600.0
600.0
0
LT-1-1-5 Fault
(West Containment Cell,
W12, Outside Cell)
LTxxx010105_LevelFdbk_Fault
Alarm Reset
Misc_Boolean_Tags_1.0
0

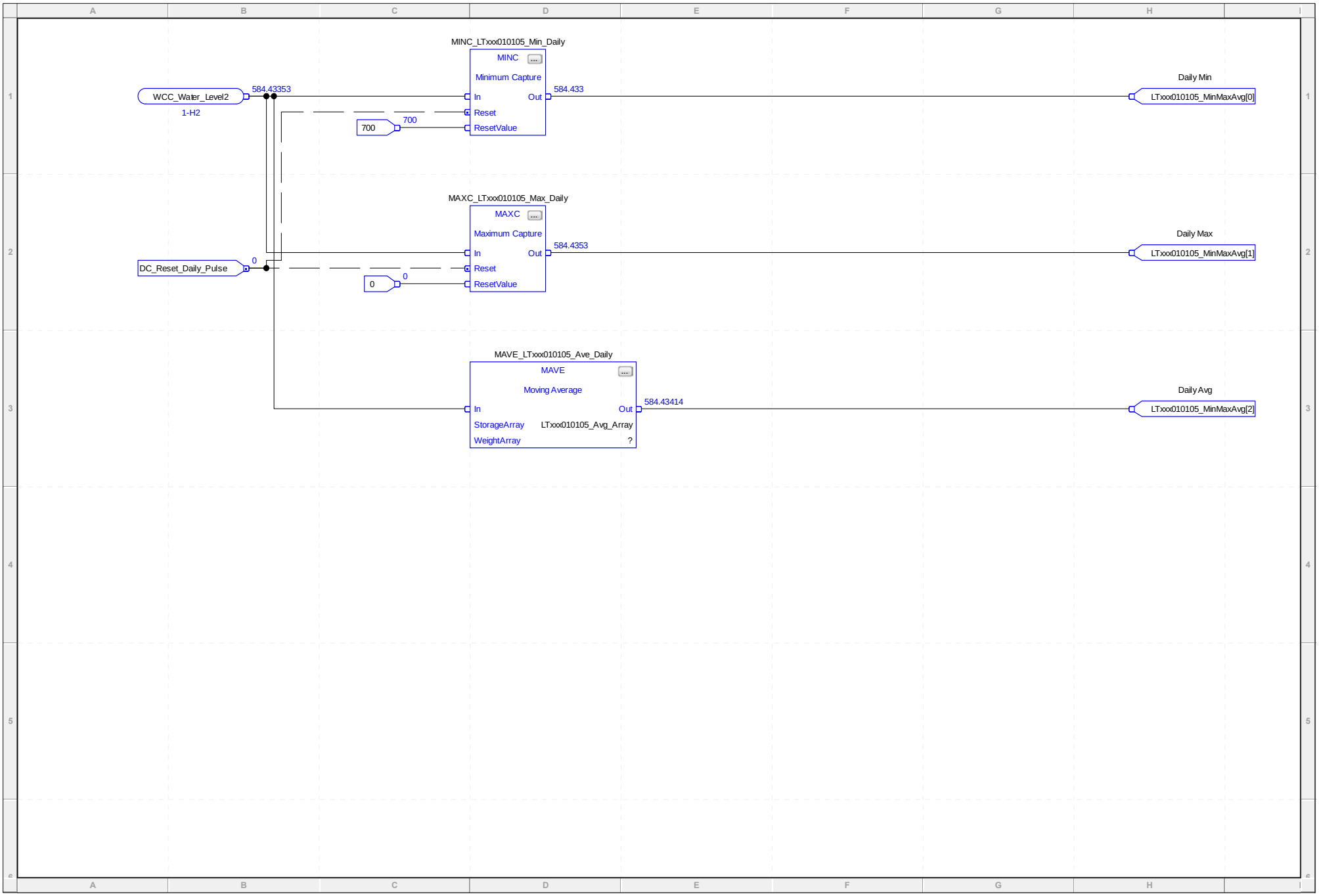
MINC_LTxxx010105_Min_Daily
MINC
Minimum Capture
WCC_Water_Level2
1-H2
584.43353
In
Out
584.433
Reset
700
700
ResetValue
Daily Min
LTxxx010105_MinMaxAvg[0]
MAXC_LTxxx010105_Max_Daily
MAXC
Maximum Capture
DC_Reset_Daily_Pulse
0
In
Out
584.4353
Reset
0
0
ResetValue
Daily Max
LTxxx010105_MinMaxAvg[1]
MAVE_LTxxx010105_Ave_Daily
MAVE
Moving Average
In
Out
584.43414
StorageArray
LTxxx010105_Avg_Array
WeightArray
?
Daily Avg
LTxxx010105_MinMaxAvg[2]

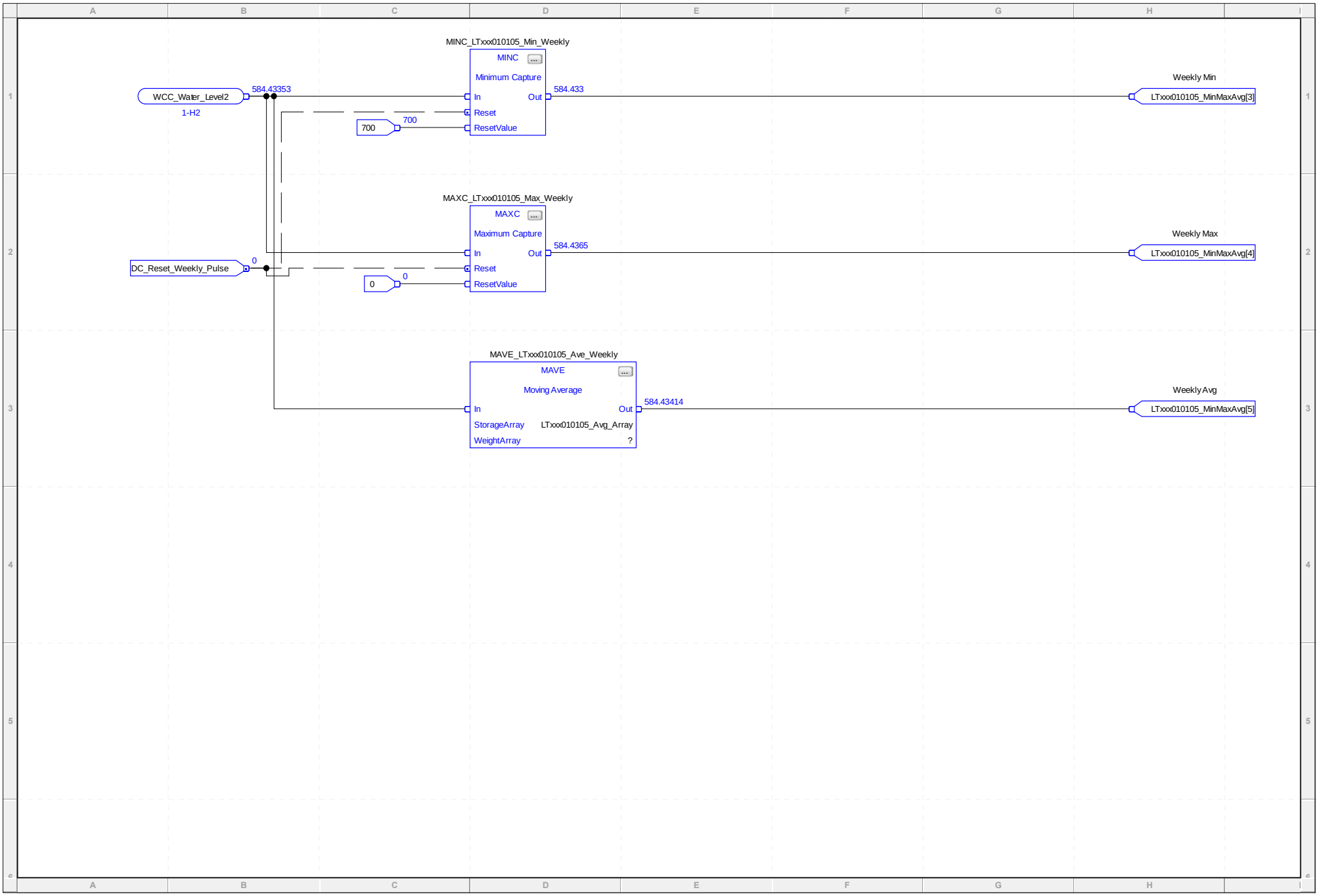
MINC_LTxxx010105_Min_Weekly
MINC
Minimum Capture
WCC_Water_Level2
1-H2
584.43353
In
Out
584.433
Reset
700
700
ResetValue
Weekly Min
LTxxx010105_MinMaxAvg[3]
MAXC_LTxxx010105_Max_Weekly
MAXC
Maximum Capture
DC_Reset_Weekly_Pulse
0
In
Out
584.4365
Reset
0
0
ResetValue
Weekly Max
LTxxx010105_MinMaxAvg[4]
MAVE_LTxxx010105_Ave_Weekly
MAVE
Moving Average
In
Out
584.43414
StorageArray
LTxxx010105_Avg_Array
WeightArray
?
Weekly Avg
LTxxx010105_MinMaxAvg[5]

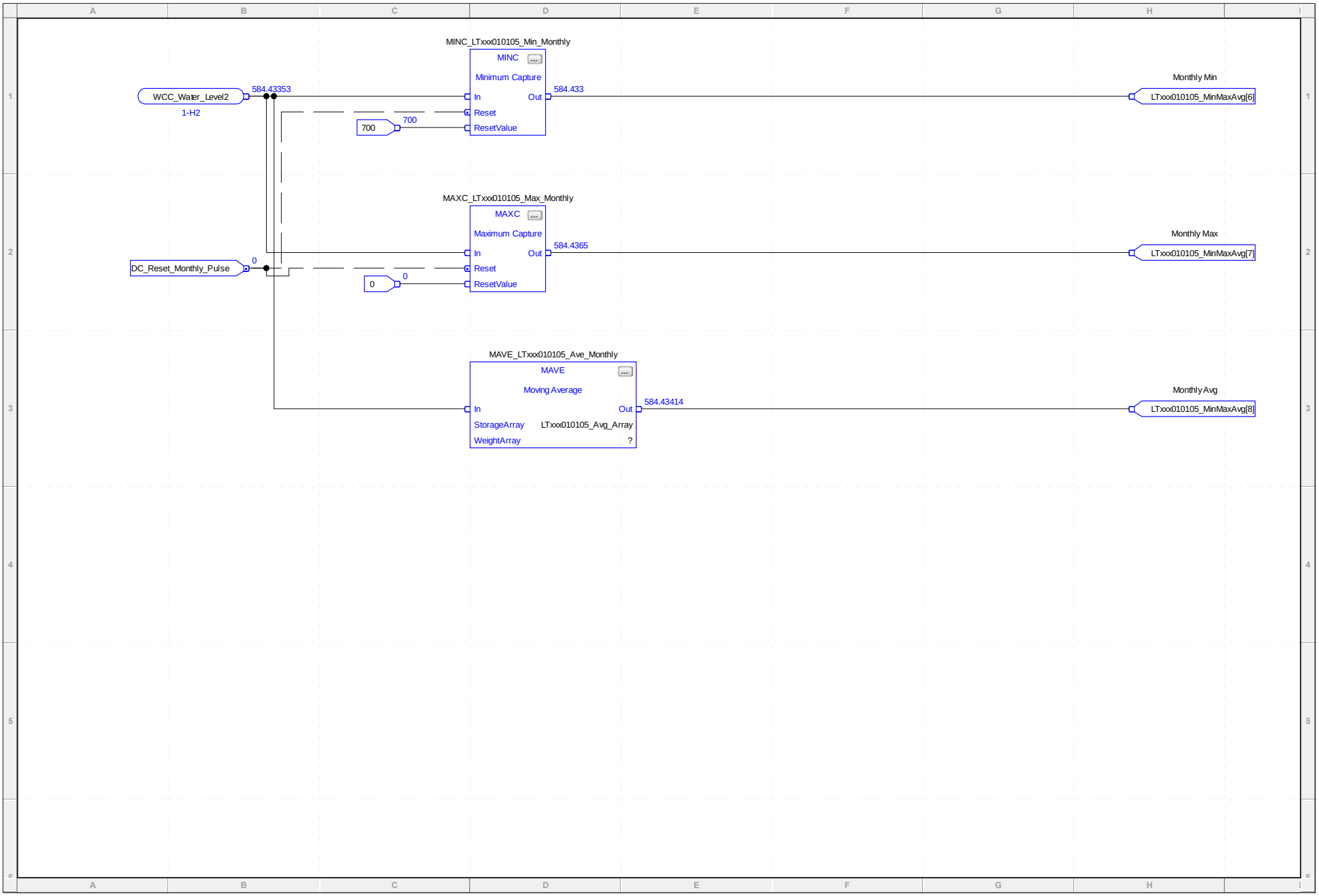
MINC_LTxxx010105_Min_Monthly
MINC
Minimum Capture
WCC_Water_Level2
1-H2
584.43353
In
Out
584.433
Reset
700
700
ResetValue
Monthly Min
LTxxx010105_MinMaxAvg[6]
MAXC_LTxxx010105_Max_Monthly
MAXC
Maximum Capture
DC_Reset_Monthly_Pulse
0
In
Out
584.4365
Reset
0
0
ResetValue
Monthly Max
LTxxx010105_MinMaxAvg[7]
MAVE_LTxxx010105_Ave_Monthly
MAVE
Moving Average
In
Out
584.43414
StorageArray
LTxxx010105_Avg_Array
WeightArray
?
Monthly Avg
LTxxx010105_MinMaxAvg[8]

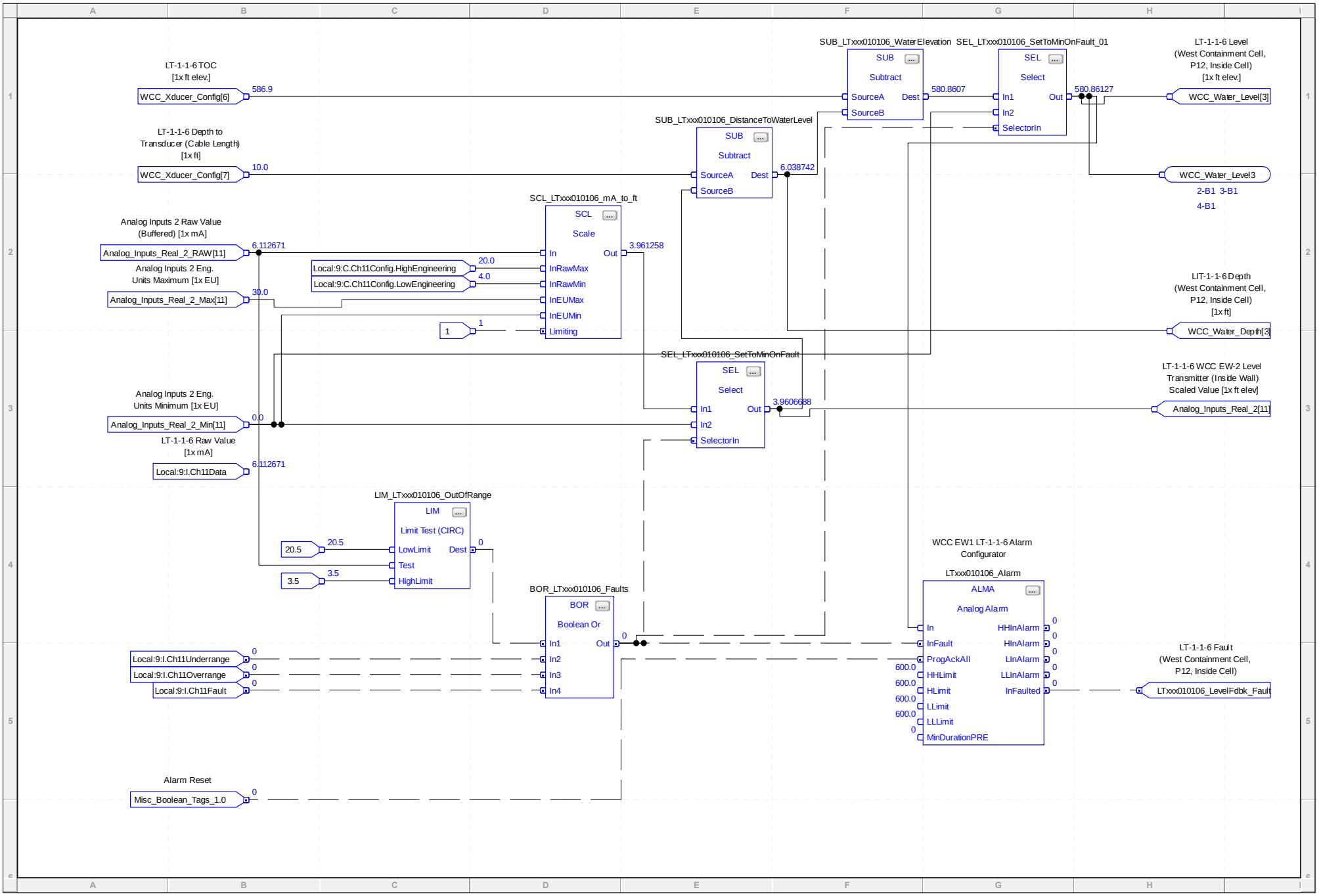
LT-1-1-6 TOC
[1x ft elev.]
WCC_Xducer_Config[6]
586.9
LT-1-1-6 Depth to
Transducer (Cable Length)
[1x ft]
WCC_Xducer_Config[7]
10.0
Analog Inputs 2 Raw Value
(Buffered) [1x mA]
Analog_Inputs_Real_2_RAW[11]
6.112671
Analog Inputs 2 Eng.
Units Maximum [1x EU]
Analog_Inputs_Real_2_Max[11]
30.0
Analog Inputs 2 Eng.
Units Minimum [1x EU]
Analog_Inputs_Real_2_Min[11]
0.0
LT-1-1-6 Raw Value
[1x mA]
Local:9:I.Ch11Data
6.112671
SCL_LTxxx010106_mA_to_ft
SCL
Scale
In
Out
3.961258
InRawMax
InRawMin
InEUMax
InEUMin
Limiting
Local:9:C.Ch11Config.HighEngineering
20.0
Local:9:C.Ch11Config.LowEngineering
4.0
1
1
SUB_LTxxx010106_WaterElevation
SUB
Subtract
SourceA
SourceB
Dest
580.8607
SEL_LTxxx010106_SetToMinOnFault_01
SEL
Select
In1
In2
SelectorIn
Out
580.86127
LT-1-1-6 Level
(West Containment Cell,
P12, Inside Cell)
[1x ft elev.]
WCC_Water_Level[3]
SUB_LTxxx010106_DistanceToWaterLevel
SUB
Subtract
SourceA
SourceB
Dest
6.038742
WCC_Water_Level3
2-B1 3-B1
4-B1
LIT-1-1-6 Depth
(West Containment Cell,
P12, Inside Cell)
[1x ft]
WCC_Water_Depth[3]
SEL_LTxxx010106_SetToMinOnFault
SEL
Select
In1
In2
SelectorIn
Out
3.9606688
LT-1-1-6 WCC EW-2 Level
Transmitter (Inside Wall)
Scaled Value [1x ft elev]
Analog_Inputs_Real_2[11]
LIM_LTxxx010106_OutOfRange
LIM
Limit Test (CIRC)
LowLimit
Test
HighLimit
Dest
0
20.5
20.5
3.5
3.5
BOR_LTxxx010106_Faults
BOR
Boolean Or
In1
In2
In3
In4
Out
0
Local:9:I.Ch11Underrange
0
Local:9:I.Ch11Overrange
0
Local:9:I.Ch11Fault
0
WCC EW1 LT-1-1-6 Alarm
Configurator
LTxxx010106_Alarm
ALMA
Analog Alarm
In
InFault
ProgAckAll
HHLimit
HLimit
LLimit
LLLimit
MinDurationPRE
HHInAlarm
HInAlarm
LInAlarm
LLInAlarm
InFaulted
600.0
600.0
600.0
600.0
0
LT-1-1-6 Fault
(West Containment Cell,
P12, Inside Cell)
LTxxx010106_LevelFdbk_Fault
Alarm Reset
Misc_Boolean_Tags_1.0
0

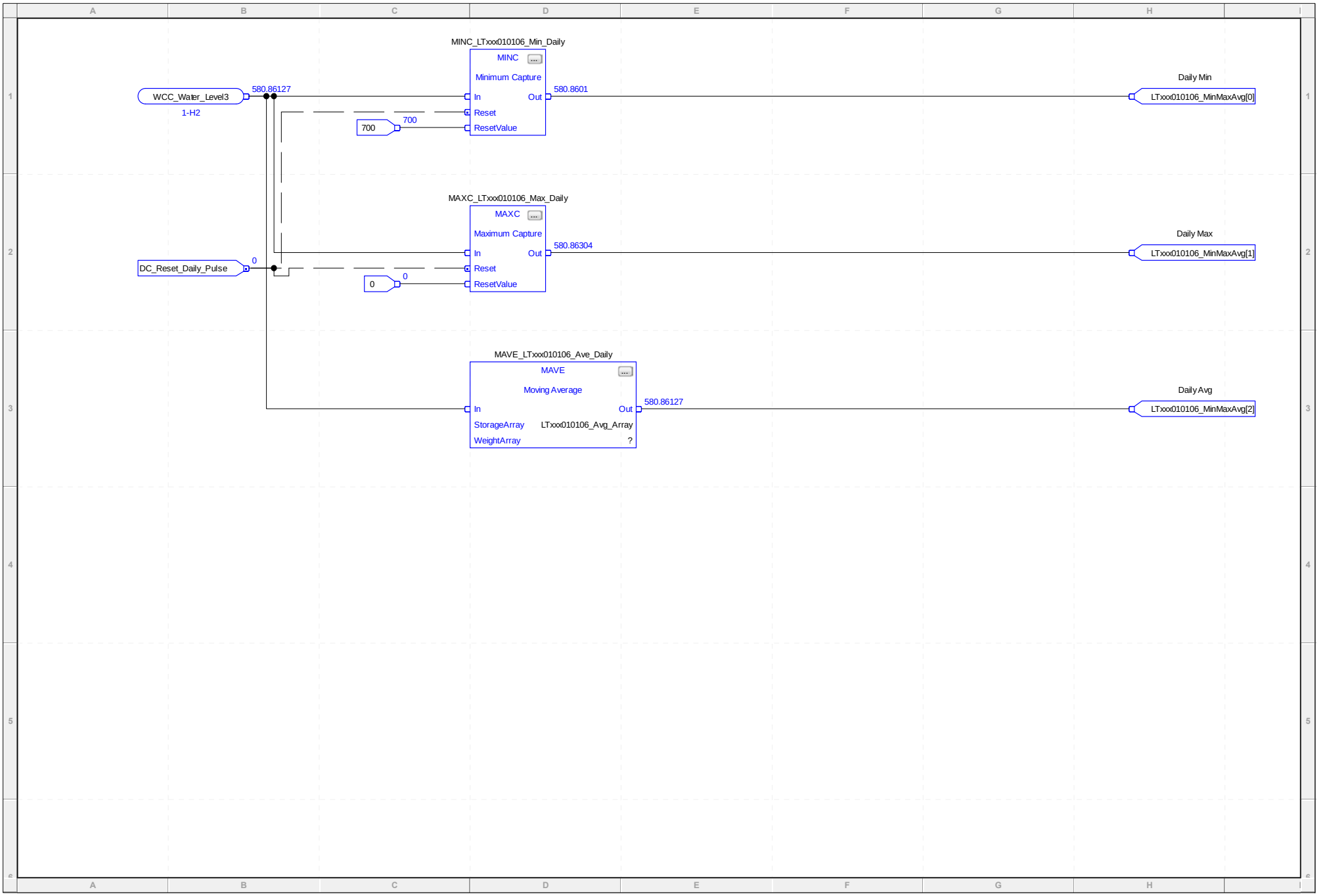
MINC_LTxxx010106_Min_Daily
MINC
Minimum Capture
WCC_Water_Level3
1-H2
580.86127
In
Out
580.8601
Reset
700
700
ResetValue
Daily Min
LTxxx010106_MinMaxAvg[0]
MAXC_LTxxx010106_Max_Daily
MAXC
Maximum Capture
DC_Reset_Daily_Pulse
0
In
Out
580.86304
Reset
0
0
ResetValue
Daily Max
LTxxx010106_MinMaxAvg[1]
MAVE_LTxxx010106_Ave_Daily
MAVE
Moving Average
In
Out
580.86127
StorageArray
LTxxx010106_Avg_Array
WeightArray
?
Daily Avg
LTxxx010106_MinMaxAvg[2]

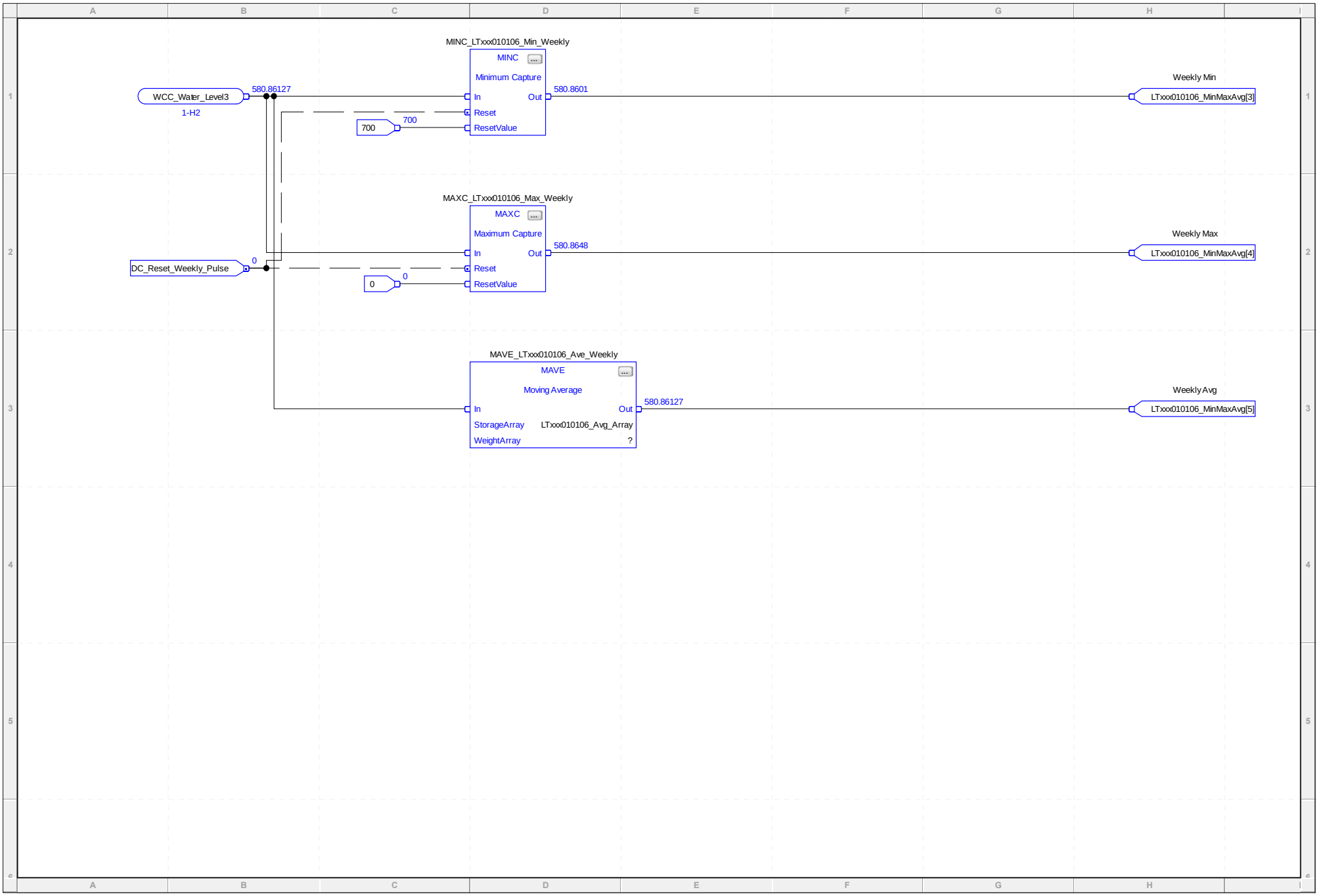
MINC_LTxxx010106_Min_Weekly
MINC
Minimum Capture
WCC_Water_Level3
1-H2
580.86127
In
Out
580.8601
Reset
700
700
ResetValue
Weekly Min
LTxxx010106_MinMaxAvg[3]
MAXC_LTxxx010106_Max_Weekly
MAXC
Maximum Capture
DC_Reset_Weekly_Pulse
0
In
Out
580.8648
Reset
0
0
ResetValue
Weekly Max
LTxxx010106_MinMaxAvg[4]
MAVE_LTxxx010106_Ave_Weekly
MAVE
Moving Average
In
Out
580.86127
StorageArray
LTxxx010106_Avg_Array
WeightArray
?
Weekly Avg
LTxxx010106_MinMaxAvg[5]

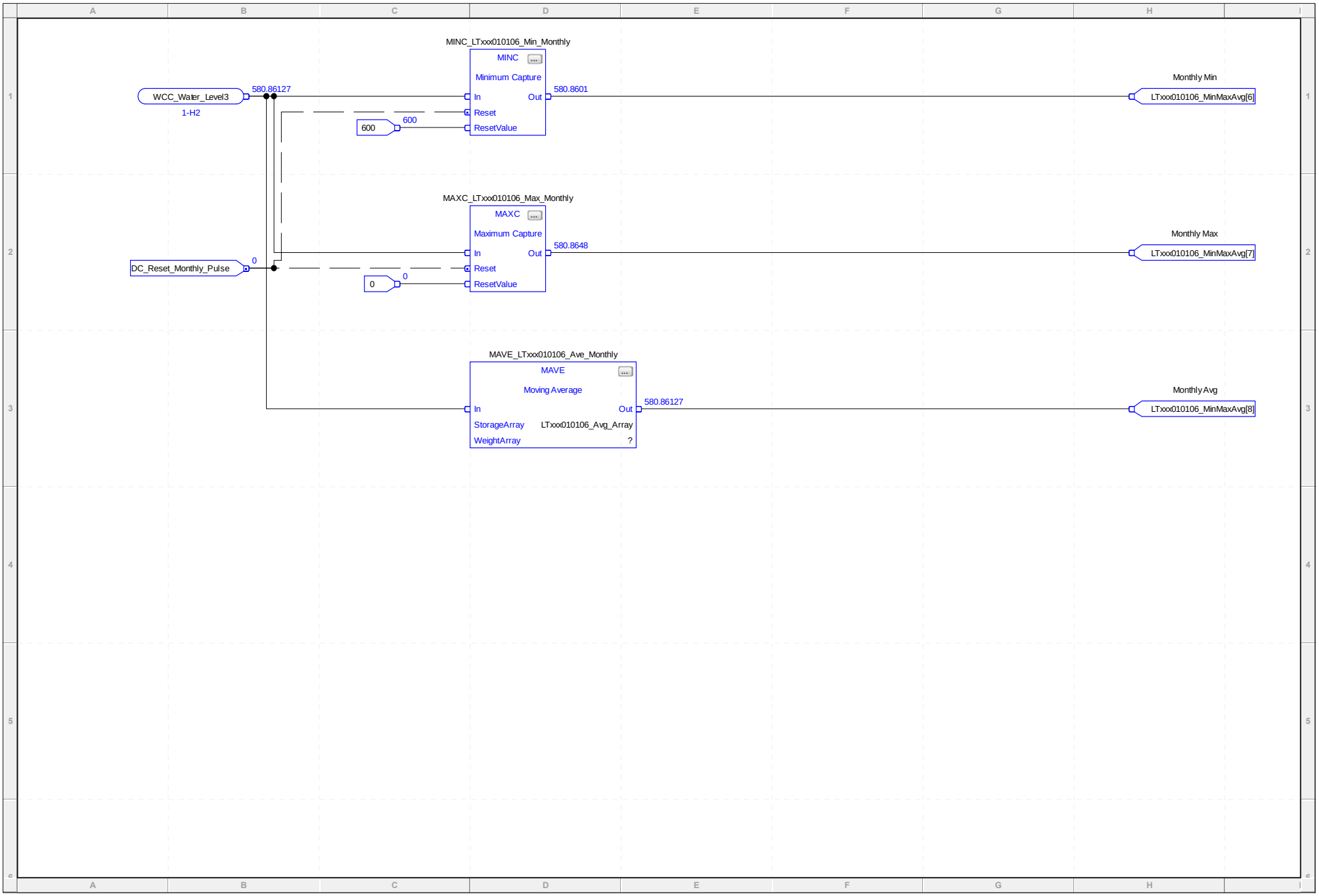
MINC_LTxxx010106_Min_Monthly
MINC
Minimum Capture
WCC_Water_Level3
1-H2
580.86127
In
Out
580.8601
Reset
600
600
ResetValue
Monthly Min
LTxxx010106_MinMaxAvg[6]
MAXC_LTxxx010106_Max_Monthly
MAXC
Maximum Capture
DC_Reset_Monthly_Pulse
0
In
Out
580.8648
Reset
0
0
ResetValue
Monthly Max
LTxxx010106_MinMaxAvg[7]
MAVE_LTxxx010106_Ave_Monthly
MAVE
Moving Average
In
Out
580.86127
StorageArray
LTxxx010106_Avg_Array
WeightArray
?
Monthly Avg
LTxxx010106_MinMaxAvg[8]

0

FCV-1-2 Valve Pos. Feedback Fault (Cons. Facility Valve) FCVxx010200_PosFdbk_Fault

Alarm Reset Misc_Boolean_Tags_1.0

AI8.0 Fail - Consolidation Facility FCV Position Feedback Failure Alarm_Bits_1.0

FCV-1-2 CF Flow Control Valve Position Feedback In Service In_Out_Service_1.0

Analog Input Fail Delay Timer
TON
Timer On Delay
Timer Alarm_Timers_1[0]
Preset 180000
Accum 0
EN
DN

Analog Input Fail Delay Timer Alarm_Timers_1[0].DN

AI8.0 Fail - Consolidation Facility FCV Position Feedback Failure Alarm_Bits_1.0

1

FIT-1-1 Flow Sensor Fault (West Containment Cell, EW-1 & EW-2) FITxx010100_FlowFdbk_Fault

Alarm Reset Misc_Boolean_Tags_1.0

AI8.1 Fail - West Containment Cell Flow Transmitter Failure Alarm_Bits_1.1

FIT-1-1 WCC Flow Transmitter In Service In_Out_Service_1.1

Analog Input Fail Delay Timer
TON
Timer On Delay
Timer Alarm_Timers_1[1]
Preset 180000
Accum 0
EN
DN

Analog Input Fail Delay Timer Alarm_Timers_1[1].DN

AI8.1 Fail - West Containment Cell Flow Transmitter Failure Alarm_Bits_1.1

2

FIT-1-2 Flow Sensor Fault (Consolidation Facility Sump) FITxx010200_FlowFdbk_Fault

Alarm Reset Misc_Boolean_Tags_1.0

AI8.2 Fail - Consolidation Facility Flow Transmitter Failure Alarm_Bits_1.2

FIT-1-2 CF Flow Transmitter In Service In_Out_Service_1.2

Analog Input Fail Delay Timer
TON
Timer On Delay
Timer Alarm_Timers_1[2]
Preset 180000
Accum 0
EN
DN

Analog Input Fail Delay Timer Alarm_Timers_1[2].DN

AI8.2 Fail - Consolidation Facility Flow Transmitter Failure Alarm_Bits_1.2

3

FIT-1-3-1 Flow Sensor Fault (Outside Containment Cell, EW-1) FITxx010301_FlowFdbk_Fault

Alarm Reset Misc_Boolean_Tags_1.0

AI8.3 Fail - ODC Containment Cell EW-1 Flow Transmitter Failure Alarm_Bits_1.3

FIT-1-3-1 ODC EW-1 Flow Transmitter In Service In_Out_Service_1.3

Analog Input Fail Delay Timer

TON
Timer On Delay
Timer Alarm_Timers_1[3]
Preset 180000
Accum 0
EN
DN

Analog Input Fail Delay Timer Alarm_Timers_1[3].DN

AI8.3 Fail - ODC Containment Cell EW-1 Flow Transmitter Failure Alarm_Bits_1.3

4

FIT-1-3-2 Flow Sensor Fault (Outside Containment Cell, EW-2) FITxx010302_FlowFdbk_Fault

Alarm Reset Misc_Boolean_Tags_1.0

AI8.4 Fail - ODC Containment Cell EW-2 Flow Transmitter Failure Alarm_Bits_1.4

FIT-1-3-2 ODC EW-2 Flow Transmitter In Service In_Out_Service_1.4

Analog Input Fail Delay Timer

TON
Timer On Delay
Timer Alarm_Timers_1[4]
Preset 180000
Accum 0
EN
DN

Analog Input Fail Delay Timer Alarm_Timers_1[4].DN

AI8.4 Fail - ODC Containment Cell EW-2 Flow Transmitter Failure Alarm_Bits_1.4

5

FIT-5-1 Flow Sensor Fault (Treated Effluent Flow) FITxx050100_FlowFdbk_Fault

Alarm Reset Misc_Boolean_Tags_1.0

AI8.5 Fail - Treated Effluent Flow Transmitter Failure Alarm_Bits_1.5

FIT-5-1 Effluent Flow Transmitter In Service In_Out_Service_1.5

Analog Input Fail Delay Timer

TON
Timer On Delay
Timer Alarm_Timers_1[5]
Preset 180000
Accum 0
EN
DN

Analog Input Fail Delay Timer Alarm_Timers_1[5].DN

AI8.5 Fail - Treated Effluent Flow Transmitter Failure Alarm_Bits_1.5

6

LIT-2-1 Level Sensor Fault (Influent Tank) LITxx020100_LevelFdbk_Fault

Alarm Reset Misc_Boolean_Tags_1.0

AI8.6 Fail - Influent Tank Level Transmitter Failure Alarm_Bits_1.6

LIT-2-1 Influent Tank Level Transmitter In Service In_Out_Service_1.6

Analog Input Fail Delay Timer
TON
Timer On Delay
Timer Alarm_Timers_1[6]
Preset 180000
Accum 0
EN
DN

Analog Input Fail Delay Timer Alarm_Timers_1[6].DN

AI8.6 Fail - Influent Tank Level Transmitter Failure Alarm_Bits_1.6

7

LT-1-1-1 (FUTURE) Fault (West Containment Cell, EW-1, Downwell) LTxxx010101_LevelFdbk_Fault

Alarm Reset Misc_Boolean_Tags_1.0

AI8.7 Fail - West Containment Cell EW-1 Level (Down Well) Transmitter 1 Failure Alarm_Bits_1.7

LT-1-1-1 WCC EW-1 (Future) Level Transmitter In Service In_Out_Service_1.7

Analog Input Fail Delay Timer
TON
Timer On Delay
Timer Alarm_Timers_1[7]
Preset 180000
Accum 0
EN
DN

Analog Input Fail Delay Timer Alarm_Timers_1[7].DN

AI8.7 Fail - West Containment Cell EW-1 Level (Down Well) Transmitter 1 Failure Alarm_Bits_1.7

8

LT-1-3-3 Fault (Outside Containment Cell, PZ-3, Inside Cell) LTxxx010303_LevelFdbk_Fault

Alarm Reset Misc_Boolean_Tags_1.0

AI8.8 Fail - ODC Containment Cell EW-1 Level (Inside Wall) Transmitter 3 Failure Alarm_Bits_1.8

LT-1-3-3 ODC EW-1 Level Transmitter In Service In_Out_Service_1.8

Analog Input Fail Delay Timer
TON
Timer On Delay
Timer Alarm_Timers_1[8]
Preset 180000
Accum 0
EN
DN

Analog Input Fail Delay Timer Alarm_Timers_1[8].DN

AI8.8 Fail - ODC Containment Cell EW-1 Level (Inside Wall) Transmitter 3 Failure Alarm_Bits_1.8

9

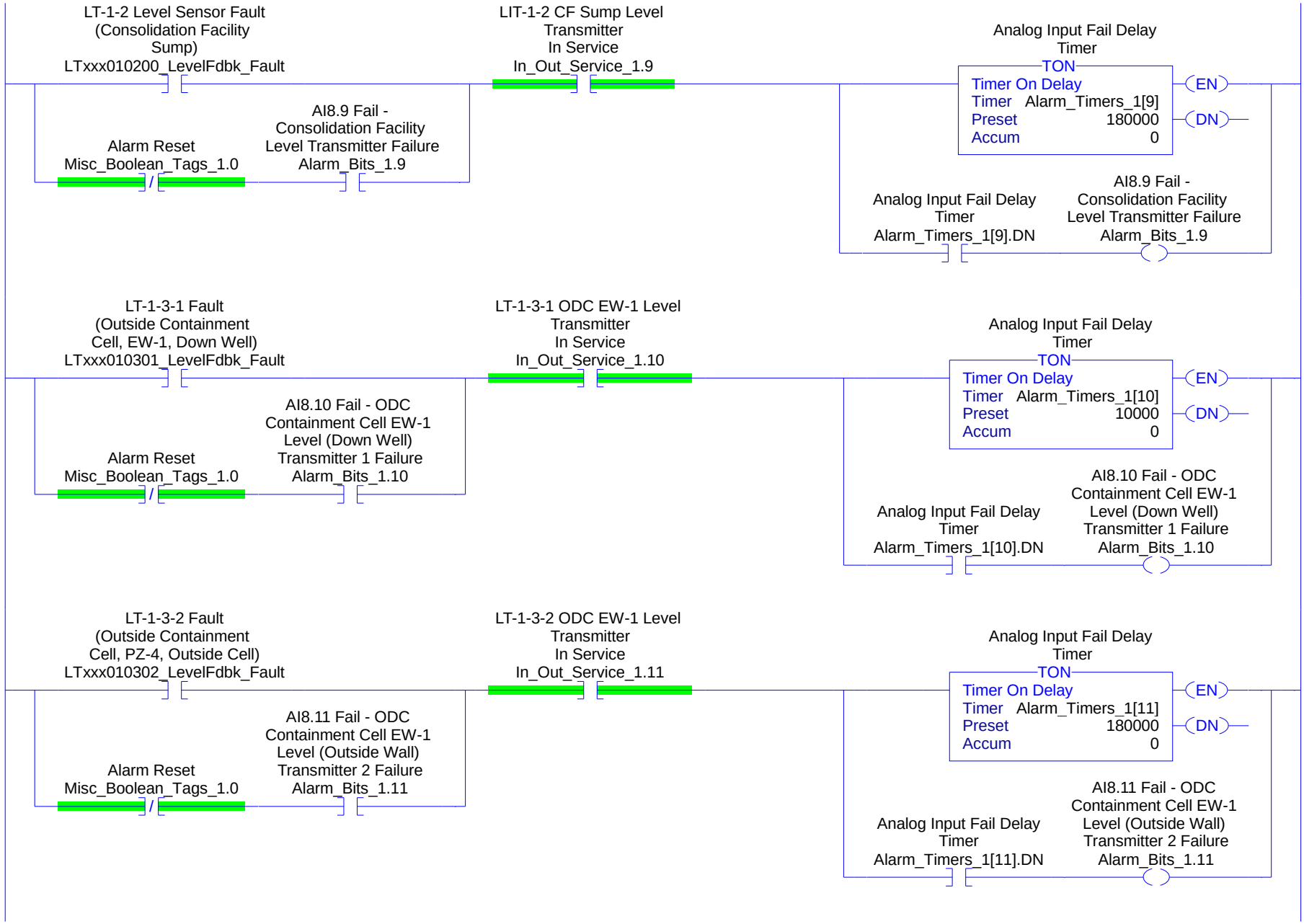
LT-1-2 Level Sensor Fault (Consolidation Facility Sump) LTxxx010200_LevelFdbk_Fault
LIT-1-2 CF Sump Level Transmitter In Service In_Out_Service_1.9
Analog Input Fail Delay Timer
TON
Timer On Delay
Timer Alarm_Timers_1[9]
Preset 180000
Accum 0
EN
DN
Alarm Reset Misc_Boolean_Tags_1.0
AI8.9 Fail - Consolidation Facility Level Transmitter Failure Alarm_Bits_1.9
Analog Input Fail Delay Timer Alarm_Timers_1[9].DN
AI8.9 Fail - Consolidation Facility Level Transmitter Failure Alarm_Bits_1.9
10
LT-1-3-1 Fault (Outside Containment Cell, EW-1, Down Well) LTxxx010301_LevelFdbk_Fault
LT-1-3-1 ODC EW-1 Level Transmitter In Service In_Out_Service_1.10
Analog Input Fail Delay Timer
TON
Timer On Delay
Timer Alarm_Timers_1[10]
Preset 10000
Accum 0
EN
DN
Alarm Reset Misc_Boolean_Tags_1.0
AI8.10 Fail - ODC Containment Cell EW-1 Level (Down Well) Transmitter 1 Failure Alarm_Bits_1.10
Analog Input Fail Delay Timer Alarm_Timers_1[10].DN
AI8.10 Fail - ODC Containment Cell EW-1 Level (Down Well) Transmitter 1 Failure Alarm_Bits_1.10
11
LT-1-3-2 Fault (Outside Containment Cell, PZ-4, Outside Cell) LTxxx010302_LevelFdbk_Fault
LT-1-3-2 ODC EW-1 Level Transmitter In Service In_Out_Service_1.11
Analog Input Fail Delay Timer
TON
Timer On Delay
Timer Alarm_Timers_1[11]
Preset 180000
Accum 0
EN
DN
Alarm Reset Misc_Boolean_Tags_1.0
AI8.11 Fail - ODC Containment Cell EW-1 Level (Outside Wall) Transmitter 2 Failure Alarm_Bits_1.11
Analog Input Fail Delay Timer Alarm_Timers_1[11].DN
AI8.11 Fail - ODC Containment Cell EW-1 Level (Outside Wall) Transmitter 2 Failure Alarm_Bits_1.11

12

LT-1-1-2 (FUTURE) Fault (West Containment Cell, EW-2, Downwell) LTxxx010102_LevelFdbk_Fault

Alarm Reset Misc_Boolean_Tags_1.0

AI8.12 Fail - West Containment Cell EW-2 Level (Down Well) Transmitter 2 Failure Alarm_Bits_1.12

LT-1-1-2 WCC EW-2 (Future) Level Transmitter In Service In_Out_Service_1.12

Analog Input Fail Delay Timer

TON
Timer On Delay
Timer Alarm_Timers_1[12]
Preset 180000
Accum 0
EN
DN

Analog Input Fail Delay Timer Alarm_Timers_1[12].DN

AI8.12 Fail - West Containment Cell EW-2 Level (Down Well) Transmitter 2 Failure Alarm_Bits_1.12

13

LT-1-3-4 Fault (Outside Containment Cell, EW-2, Downwell) LTxxx010304_LevelFdbk_Fault

Alarm Reset Misc_Boolean_Tags_1.0

AI8.13 Fail - ODC Containment Cell EW-2 Level (Down Well) Transmitter 1 Failure Alarm_Bits_1.13

LT-1-3-4 ODC EW-2 Level Transmitter In Service In_Out_Service_1.13

Analog Input Fail Delay Timer

TON
Timer On Delay
Timer Alarm_Timers_1[13]
Preset 180000
Accum 0
EN
DN

Analog Input Fail Delay Timer Alarm_Timers_1[13].DN

AI8.13 Fail - ODC Containment Cell EW-2 Level (Down Well) Transmitter 1 Failure Alarm_Bits_1.13

14

LT-1-3-5 Fault (Outside Containment Cell, PZ-8, Outside Cell) LTxxx010305_LevelFdbk_Fault

Alarm Reset Misc_Boolean_Tags_1.0

AI8.14 Fail - ODC Containment Cell EW-2 Level (Outside Wall) Transmitter 2 Failure Alarm_Bits_1.14

LT-1-3-5 ODC EW-2 Level Transmitter In Service In_Out_Service_1.14

Analog Input Fail Delay Timer

TON
Timer On Delay
Timer Alarm_Timers_1[14]
Preset 180000
Accum 0
EN
DN

Analog Input Fail Delay Timer Alarm_Timers_1[14].DN

AI8.14 Fail - ODC Containment Cell EW-2 Level (Outside Wall) Transmitter 2 Failure Alarm_Bits_1.14

15

LT-1-3-6 Fault (Outside Containment Cell, PZ-7, Inside Cell) LTxxx010306_LevelFdbk_Fault

Alarm Reset Misc_Boolean_Tags_1.0

AI8.15 Fail - ODC Containment Cell EW-2 Level (Inside Wall) Transmitter 3 Failure Alarm_Bits_1.15

LT-1-3-6 ODC EW-2 Level Transmitter In Service In_Out_Service_1.15

Analog Input Fail Delay Timer
TON
Timer On Delay
Timer Alarm_Timers_1[15]
Preset 180000
Accum 0
EN
DN

Analog Input Fail Delay Timer Alarm_Timers_1[15].DN

AI8.15 Fail - ODC Containment Cell EW-2 Level (Inside Wall) Transmitter 3 Failure Alarm_Bits_1.15

16

PDIT-3-1 Pressure Diff. Sensor Fault (Cartridge Filter) PDITx030100_PresDFdbk_Fault

Alarm Reset Misc_Boolean_Tags_1.0

AI9.0 Fail - Cartridge Filter Pressure Diff. Transmitter Failure Alarm_Bits_1.16

PDIT-3-1 Cartridge Filter Pressure Diff. Transmitter In Service In_Out_Service_1.16

Analog Input Fail Delay Timer
TON
Timer On Delay
Timer Alarm_Timers_1[16]
Preset 180000
Accum 0
EN
DN

Analog Input Fail Delay Timer Alarm_Timers_1[16].DN

AI9.0 Fail - Cartridge Filter Pressure Diff. Transmitter Failure Alarm_Bits_1.16

17

PDIT-4-1 Pressure Diff. Sensor Fault (GAC-1 Filter) PDITx040100_PresDFdbk_Fault

Alarm Reset Misc_Boolean_Tags_1.0

AI9.1 Fail - GAC 1 Pressure Diff. Transmitter Failure Alarm_Bits_1.17

PDIT-4-1 GAC-1 Filter Pressure Diff. Transmitter In Service In_Out_Service_1.17

Analog Input Fail Delay Timer
TON
Timer On Delay
Timer Alarm_Timers_1[17]
Preset 180000
Accum 0
EN
DN

Analog Input Fail Delay Timer Alarm_Timers_1[17].DN

AI9.1 Fail - GAC 1 Pressure Diff. Transmitter Failure Alarm_Bits_1.17

18

PDIT-4-2 Pressure Diff. Sensor Fault (GAC-2 Filter) PDITx040200_PresDFdbk_Fault

Alarm Reset Misc_Boolean_Tags_1.0

AI9.2 Fail - GAC 2 Pressure Diff. Transmitter Failure Alarm_Bits_1.18

PDIT-4-2 GAC-2 Filter Pressure Diff. Transmitter In Service In_Out_Service_1.18

Analog Input Fail Delay Timer

TON
Timer On Delay
Timer Alarm_Timers_1[18]
Preset 180000
Accum 0
EN
DN

Analog Input Fail Delay Timer Alarm_Timers_1[18].DN

AI9.2 Fail - GAC 2 Pressure Diff. Transmitter Failure Alarm_Bits_1.18

19

Pxxxx010301_Sensor_Fault

Alarm Reset Misc_Boolean_Tags_1.0

AI9.3 Fail - ODC Containment Cell EW-1 Pump Position Feedback Failure Alarm_Bits_1.19

In_Out_Service_1.19

Analog Input Fail Delay Timer

TON
Timer On Delay
Timer Alarm_Timers_1[19]
Preset 180000
Accum 0
EN
DN

Analog Input Fail Delay Timer Alarm_Timers_1[19].DN

AI9.3 Fail - ODC Containment Cell EW-1 Pump Position Feedback Failure Alarm_Bits_1.19

20

Pxxxx010302_Sensor_Fault

Alarm Reset Misc_Boolean_Tags_1.0

AI9.4 Fail - ODC Containment Cell EW-2 Pump Position Feedback Failure Alarm_Bits_1.20

In_Out_Service_1.20

Analog Input Fail Delay Timer

TON
Timer On Delay
Timer Alarm_Timers_1[20]
Preset 180000
Accum 0
EN
DN

Analog Input Fail Delay Timer Alarm_Timers_1[20].DN

AI9.4 Fail - ODC Containment Cell EW-2 Pump Position Feedback Failure Alarm_Bits_1.20

21

Local:9:I.Ch5Underrange
Local:9:I.Ch5Overrange
Local:9:I.Ch5Fault
Alarm Reset
Misc_Boolean_Tags_1.0
AI9.5 Fail - Spare
Alarm_Bits_1.21
In_Out_Service_1.21

Analog Input Fail Delay
Timer
TON
Timer On Delay
Timer Alarm_Timers_1[21]
Preset 180000
Accum 0
EN
DN

Analog Input Fail Delay
Timer
Alarm_Timers_1[21].DN
AI9.5 Fail - Spare
Alarm_Bits_1.21

22

Local:9:I.Ch6Underrange
Local:9:I.Ch6Overrange
Local:9:I.Ch6Fault
Alarm Reset
Misc_Boolean_Tags_1.0
AI9.6 Fail - Spare
Alarm_Bits_1.22
In_Out_Service_1.22

Analog Input Fail Delay
Timer
TON
Timer On Delay
Timer Alarm_Timers_1[22]
Preset 180000
Accum 0
EN
DN

Analog Input Fail Delay
Timer
Alarm_Timers_1[22].DN
AI9.6 Fail - Spare
Alarm_Bits_1.22

23

Local:9:I.Ch7Underrange
Local:9:I.Ch7Overrange
Local:9:I.Ch7Fault
Alarm Reset
Misc_Boolean_Tags_1.0
AI9.7 Fail - Spare
Alarm_Bits_1.23
In_Out_Service_1.23

Analog Input Fail Delay
Timer
TON
Timer On Delay
Timer Alarm_Timers_1[23]
Preset 180000
Accum 0
EN
DN

Analog Input Fail Delay
Timer
Alarm_Timers_1[23].DN
AI9.7 Fail - Spare
Alarm_Bits_1.23

24

LT-1-1-3 Fault (West Containment Cell, W10, Outside Cell) LTxxx010103_LevelFdbk_Fault

LIT-1-1-3 WCC EW-1 Level Transmitter In Service In_Out_Service_1.24

Alarm Reset Misc_Boolean_Tags_1.0 /

AI9.8 Fail - West Containment Cell W-10 Level Transmitter (Outside Wall) Transmitter 3 Failure Alarm_Bits_1.24

Analog Input Fail Delay Timer

TON
Timer On Delay
Timer Alarm_Timers_1[24]
Preset 180000
Accum 0
EN
DN

Analog Input Fail Delay Timer Alarm_Timers_1[24].DN

AI9.8 Fail - West Containment Cell W-10 Level Transmitter (Outside Wall) Transmitter 3 Failure Alarm_Bits_1.24

25

LT-1-1-4 Fault (West Containment Cell, P10, Inside Cell) LTxxx010104_LevelFdbk_Fault

LIT-1-1-4 WCC EW-1 Level Transmitter In Service In_Out_Service_1.25

Alarm Reset Misc_Boolean_Tags_1.0 /

AI9.9 Fail - West Containment Cell P-10 Level Transmitter (Inside Wall) Transmitter 4 Failure Alarm_Bits_1.25

Analog Input Fail Delay Timer

TON
Timer On Delay
Timer Alarm_Timers_1[25]
Preset 180000
Accum 0
EN
DN

Analog Input Fail Delay Timer Alarm_Timers_1[25].DN

AI9.9 Fail - West Containment Cell P-10 Level Transmitter (Inside Wall) Transmitter 4 Failure Alarm_Bits_1.25

26

LT-1-1-5 Fault (West Containment Cell, W12, Outside Cell) LTxxx010105_LevelFdbk_Fault

LIT-1-1-5 WCC EW-1 Level Transmitter In Service In_Out_Service_1.26

Alarm Reset Misc_Boolean_Tags_1.0

AI9.10 Fail - West Containment Cell W-12 Level Transmitter (Outside Wall) Transmitter 5 Failure Alarm_Bits_1.26

Analog Input Fail Delay Timer

TON
Timer On Delay
Timer Alarm_Timers_1[26]
Preset 180000
Accum 0
EN
DN

Analog Input Fail Delay Timer Alarm_Timers_1[26].DN

AI9.10 Fail - West Containment Cell W-12 Level Transmitter (Outside Wall) Transmitter 5 Failure Alarm_Bits_1.26

27

LT-1-1-6 Fault (West Containment Cell, P12, Inside Cell) LTxxx010106_LevelFdbk_Fault

LIT-1-1-6 WCC EW-1 Level Transmitter In Service In_Out_Service_1.27

Alarm Reset Misc_Boolean_Tags_1.0

AI9.11 Fail - West Containment Cell P-12 Level Transmitter (Inside Wall) Transmitter 6 Failure Alarm_Bits_1.27

Analog Input Fail Delay Timer

TON
Timer On Delay
Timer Alarm_Timers_1[27]
Preset 180000
Accum 0
EN
DN

Analog Input Fail Delay Timer Alarm_Timers_1[27].DN

AI9.11 Fail - West Containment Cell P-12 Level Transmitter (Inside Wall) Transmitter 6 Failure Alarm_Bits_1.27

28

Local:9:I.Ch12Underrange

Local:9:I.Ch12Overrange

Local:9:I.Ch12Fault

Alarm Reset Misc_Boolean_Tags_1.0

AI9.12 Fail - Spare Alarm_Bits_1.28

In_Out_Service_1.28

Analog Input Fail Delay Timer

TON
Timer On Delay
Timer Alarm_Timers_1[28]
Preset 180000
Accum 0
EN
DN

Analog Input Fail Delay Timer Alarm_Timers_1[28].DN

AI9.12 Fail - Spare Alarm_Bits_1.28

29

Local:9:I.Ch13Underrange
Local:9:I.Ch13Overrange
Local:9:I.Ch13Fault
Alarm Reset
Misc_Boolean_Tags_1.0
AI9.13 Fail - Spare
Alarm_Bits_1.29
In_Out_Service_1.29

Analog Input Fail Delay
Timer
TON
Timer On Delay
Timer Alarm_Timers_1[29]
Preset 180000
Accum 0
EN
DN

Analog Input Fail Delay
Timer
Alarm_Timers_1[29].DN
AI9.13 Fail - Spare
Alarm_Bits_1.29

30

Local:9:I.Ch14Underrange
Local:9:I.Ch14Overrange
Local:9:I.Ch14Fault
Alarm Reset
Misc_Boolean_Tags_1.0
AI9.14 Fail - Spare
Alarm_Bits_1.30
In_Out_Service_1.30

Analog Input Fail Delay
Timer
TON
Timer On Delay
Timer Alarm_Timers_1[30]
Preset 180000
Accum 0
EN
DN

Analog Input Fail Delay
Timer
Alarm_Timers_1[30].DN
AI9.14 Fail - Spare
Alarm_Bits_1.30

31

Local:9:I.Ch15Underrange
Local:9:I.Ch15Overrange
Local:9:I.Ch15Fault
Alarm Reset
Misc_Boolean_Tags_1.0
AI9.15 Fail - Spare
Alarm_Bits_1.31
In_Out_Service_1.31

Analog Input Fail Delay
Timer
TON
Timer On Delay
Timer Alarm_Timers_1[31]
Preset 180000
Accum 0
EN
DN

Analog Input Fail Delay
Timer
Alarm_Timers_1[31].DN
AI9.15 Fail - Spare
Alarm_Bits_1.31

32

ESL-10-1 UPS Battery Low
Discrete_Inputs_1.0

Alarm Reset
Misc_Boolean_Tags_1.0

UPS Battery Low Alarm
(EAL) ESL-10-1
Alarm_Bits_2.0

TON
Timer On Delay
Timer Alarm_Timers_2[0]
Preset 10000
Accum 0
EN
DN

Alarm_Timers_2[0].DN

UPS Battery Low Alarm
(EAL) ESL-10-1
Alarm_Bits_2.0

33

JSL-10-1 Loss of Power
Discrete_Inputs_1.1

Alarm Reset
Misc_Boolean_Tags_1.0

Loss of Power Alarm
(JAL) JSL-10-1
Alarm_Bits_2.1

TON
Timer On Delay
Timer Alarm_Timers_2[1]
Preset 10000
Accum 0
EN
DN

Alarm_Timers_2[1].DN

Loss of Power Alarm
(JAL) JSL-10-1
Alarm_Bits_2.1

34

LSHH-7-1 Building Sump
Level High-High
Discrete_Inputs_1.2

Alarm Reset
Misc_Boolean_Tags_1.0

Building Sump Alarm
(LAHH) LSHH-7-1
Alarm_Bits_2.2

TON
Timer On Delay
Timer Alarm_Timers_2[2]
Preset 10000
Accum 0
EN
DN

Alarm_Timers_2[2].DN

Building Sump Alarm
(LAHH) LSHH-7-1
Alarm_Bits_2.2

35

P-1-1-1 WCC EW-1 Pump Remote
Discrete_Inputs_1.5

P-1-1-1 WCC EW-1 Pump Run Command
Discrete_Outputs_1.0

P-1-1-1 WCC EW-1 Pump Running (AUX)
Discrete_Inputs_1.4

P-1-1-1 WCC EW-1 Pump In Service
In_Out_Service_2.3

Alarm Reset
Misc_Boolean_Tags_1.0

WCC EW-1 Pump Run Fail (YA) P-1-1-1
Alarm_Bits_2.3

TON
Timer On Delay
Timer Alarm_Timers_2[3]
Preset 10000
Accum 0
EN
DN

Alarm_Timers_2[3].DN

WCC EW-1 Pump Run Fail (YA) P-1-1-1
Alarm_Bits_2.3

36

P-1-1-1 WCC EW-1 Pump Fail
Discrete_Inputs_1.3

P-1-1-1 WCC EW-1 Pump In Service
In_Out_Service_2.3

Alarm Reset
Misc_Boolean_Tags_1.0

WCC EW-1 Pump Fail (YA) P-1-1-1
Alarm_Bits_2.4

TON
Timer On Delay
Timer Alarm_Timers_2[4]
Preset 10000
Accum 0
EN
DN

Alarm_Timers_2[4].DN

WCC EW-1 Pump Fail (YA) P-1-1-1
Alarm_Bits_2.4

37

P-1-1-2 WCC EW-2 Pump Remote
Discrete_Inputs_1.8

P-1-1-2 WCC EW-2 Pump Run Command
Discrete_Outputs_1.1

P-1-1-2 WCC EW-2 Pump Running (AUX)
Discrete_Inputs_1.7

P-1-1-2 WCC EW-2 Pump In Service
In_Out_Service_2.5

Alarm Reset
Misc_Boolean_Tags_1.0

WCC EW-2 Pump Run Fail (YA) P-1-1-2
Alarm_Bits_2.5

TON
Timer On Delay
Timer Alarm_Timers_2[5]
Preset 10000
Accum 0
EN
DN

Alarm_Timers_2[5].DN

WCC EW-2 Pump Run Fail (YA) P-1-1-2
Alarm_Bits_2.5

38

P-1-1-2 WCC EW-2 Pump Fail
Discrete_Inputs_1.6

P-1-1-2 WCC EW-2 Pump In Service
In_Out_Service_2.5

Alarm Reset
Misc_Boolean_Tags_1.0

WCC EW-2 Pump Fail (YA) P-1-1-2
Alarm_Bits_2.6

TON
Timer On Delay
Timer Alarm_Timers_2[6]
Preset 10000
Accum 0
EN
DN

Alarm_Timers_2[6].DN

WCC EW-2 Pump Fail (YA) P-1-1-2
Alarm_Bits_2.6

39

P-1-3-1 ODC EW-1 Pump Remote Discrete_Inputs_1.11
P-1-3-1 ODC EW-1 Pump Run Command Discrete_Outputs_1.2
P-1-3-1 ODC EW-1 Pump Running (AUX) Discrete_Inputs_1.10 /
P-1-3-1 ODC EW-1 Pump In Service In_Out_Service_2.7
Alarm Reset Misc_Boolean_Tags_1.0 /
ODC EW-1 Pump Run Fail (YA) P-1-3-1 Alarm_Bits_2.7

TON
Timer On Delay
Timer Alarm_Timers_2[7]
Preset 10000
Accum 0
EN
DN

Alarm_Timers_2[7].DN
ODC EW-1 Pump Run Fail (YA) P-1-3-1 Alarm_Bits_2.7

40

P-1-3-1 ODC EW-1 Pump Fault Discrete_Inputs_1.9
P-1-3-1 ODC EW-1 Pump In Service In_Out_Service_2.7
Alarm Reset Misc_Boolean_Tags_1.0 /
ODC EW-1 Pump Fault (YA) P-1-3-1 Alarm_Bits_2.8

TON
Timer On Delay
Timer Alarm_Timers_2[8]
Preset 10000
Accum 0
EN
DN

Alarm_Timers_2[8].DN
ODC EW-1 Pump Fault (YA) P-1-3-1 Alarm_Bits_2.8

41

P-1-3-2 ODC EW-2 Pump Remote
Discrete_Inputs_1.14

P-1-3-2 ODC EW-2 Pump Run Command
Discrete_Outputs_1.3

P-1-3-2 ODC EW-2 Pump Running (AUX)
Discrete_Inputs_1.13

P-1-3-2 ODC EW-2 Pump In Service
In_Out_Service_2.9

Alarm Reset
Misc_Boolean_Tags_1.0

ODC EW2 Pump Run Fail (YA) P-1-3-2
Alarm_Bits_2.9

TON
Timer On Delay
Timer Alarm_Timers_2[9]
Preset 10000
Accum 0
EN
DN

Alarm_Timers_2[9].DN

ODC EW2 Pump Run Fail (YA) P-1-3-2
Alarm_Bits_2.9

42

P-1-3-2 ODC EW-2 Pump Fault
Discrete_Inputs_1.12

P-1-3-2 ODC EW-2 Pump In Service
In_Out_Service_2.9

Alarm Reset
Misc_Boolean_Tags_1.0

ODC EW-2 Pump Fault (YA) P-1-3-2
Alarm_Bits_2.10

TON
Timer On Delay
Timer Alarm_Timers_2[10]
Preset 10000
Accum 0
EN
DN

Alarm_Timers_2[10].DN

ODC EW-2 Pump Fault (YA) P-1-3-2
Alarm_Bits_2.10

43

P-1-2 CF Sump Pump Remote
Discrete_Inputs_2.1

CF Sump Pump Run Command
Discrete_Outputs_1.4

P-1-2 CF Sump Pump Running (AUX)
Discrete_Inputs_2.0

P-1-2 CF Sump Pump In Service
In_Out_Service_2.11

Alarm Reset
Misc_Boolean_Tags_1.0

CF Sump Pump Run Fail (YA) P-1-2
Alarm_Bits_2.11

TON
Timer On Delay
Timer Alarm_Timers_2[11]
Preset 10000
Accum 0
EN
DN

Alarm_Timers_2[11].DN

CF Sump Pump Run Fail (YA) P-1-2
Alarm_Bits_2.11

44

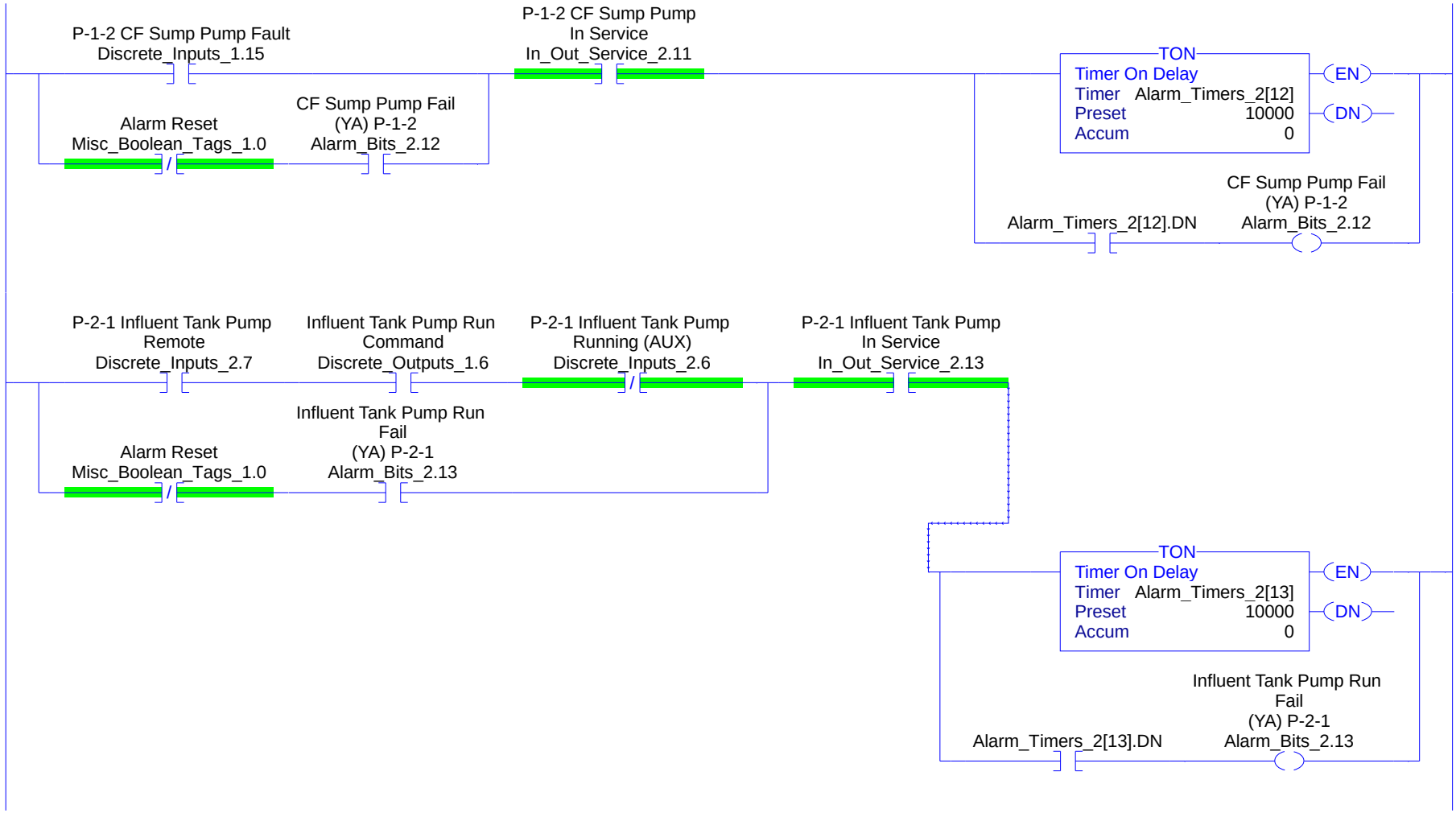
P-1-2 CF Sump Pump Fault
Discrete_Inputs_1.15
P-1-2 CF Sump Pump
In Service
In_Out_Service_2.11
Alarm Reset
Misc_Boolean_Tags_1.0
CF Sump Pump Fail
(YA) P-1-2
Alarm_Bits_2.12
TON
Timer On Delay
Timer Alarm_Timers_2[12]
Preset 10000
Accum 0
EN
DN
Alarm_Timers_2[12].DN
CF Sump Pump Fail
(YA) P-1-2
Alarm_Bits_2.12
P-2-1 Influent Tank Pump
Remote
Discrete_Inputs_2.7
Influent Tank Pump Run
Command
Discrete_Outputs_1.6
P-2-1 Influent Tank Pump
Running (AUX)
Discrete_Inputs_2.6
P-2-1 Influent Tank Pump
In Service
In_Out_Service_2.13
Alarm Reset
Misc_Boolean_Tags_1.0
Influent Tank Pump Run
Fail
(YA) P-2-1
Alarm_Bits_2.13
TON
Timer On Delay
Timer Alarm_Timers_2[13]
Preset 10000
Accum 0
EN
DN
Alarm_Timers_2[13].DN
Influent Tank Pump Run
Fail
(YA) P-2-1
Alarm_Bits_2.13

45

46

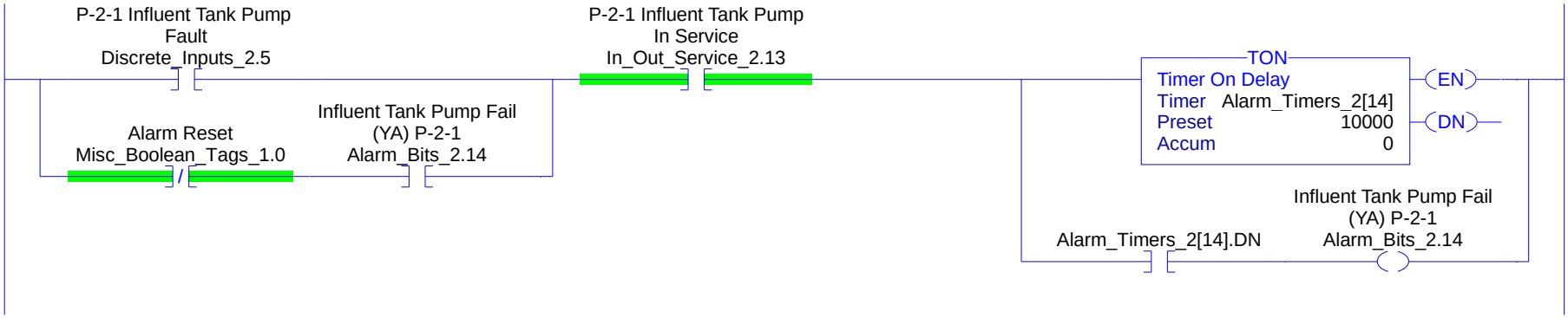
P-2-1 Influent Tank Pump
Fault
Discrete_Inputs_2.5
P-2-1 Influent Tank Pump
In Service
In_Out_Service_2.13
Alarm Reset
Misc_Boolean_Tags_1.0
Influent Tank Pump Fail
(YA) P-2-1
Alarm_Bits_2.14
TON
Timer On Delay
Timer Alarm_Timers_2[14]
Preset 10000
Accum 0
EN
DN
Alarm_Timers_2[14].DN
Influent Tank Pump Fail
(YA) P-2-1
Alarm_Bits_2.14

47

IA Delay Setpoint (Seconds)
LES
Less Than (A<B)
Source A Intrusion_Alarm_SetPoints[0] 60.0
Source B 0

IA Delay Setpoint (Seconds)
GRT
Greater Than (A>B)
Source A Intrusion_Alarm_SetPoints[0] 60.0
Source B 300

IA Delay Setpoint (Seconds)
CLR
Clear
Dest Intrusion_Alarm_SetPoints[0] 60.0

MUL
Multiply
Source A Intrusion_Alarm_SetPoints[0] 60.0
Source B 1000
Dest Alarm_Timers_2[15].PRE 60000

This code disables the alarm - entered by operator
NEQ
Not Equal
Source A Intrusion_Diable_Code ''
Source B Intrusion_Code 'zxc'

Intrusion Alarm Status 0=Enabled, 1=Disabled
Intrusion_Alarm_Bits.1

ZSL-10-1 Building Entry Door Closed
Discrete_Inputs_2.8

Alarm Reset
Misc_Boolean_Tags_1.0

Building Intrusion Alarm (ZAL) ZSL-10-1
Alarm_Bits_2.15

TON
Timer On Delay
Timer Alarm_Timers_2[15]
Preset 60000
Accum 0
EN
DN

Alarm_Timers_2[15].DN

Building Intrusion Alarm (ZAL) ZSL-10-1
Alarm_Bits_2.15

48

HS-10-1 Treatment System Stop
Discrete_Inputs_2.15

Alarm Reset
Misc_Boolean_Tags_1.0

Treatment System Stop Active
(YA) HS-1-10
Alarm_Bits_2.16

TON
Timer On Delay
Timer Alarm_Timers_2[16]
Preset 2000
Accum 0
EN
DN

Alarm_Timers_2[16].DN

Treatment System Stop Active
(YA) HS-1-10
Alarm_Bits_2.16

49

WCC FIT-1-1 Alarm Configurator
LES
Less Than (A<B)
Source A FITxx010100_Alarm.HHLimit
24.0
Source B Analog_Inputs_Real_1_Max[1]
50.0

FIT-1-1 Flow Sensor Fault (West Containment Cell, EW-1 & EW-2)
FITxx010100_FlowFdbk_Fault

FIT-1-1 WCC Flow Transmitter In Service
In_Out_Service_1.1

WCC FIT-1-1 Alarm Configurator
FITxx010100_Alarm.HHEnabled

WCC FIT-1-1 Alarm Configurator
FITxx010100_Alarm.HHInAlarm

P-1-1-1 WCC EW-1 Pump Running (AUX)
Discrete_Inputs_1.4

P-1-1-2 WCC EW-2 Pump Running (AUX)
Discrete_Inputs_1.7

Alarm Reset
Misc_Boolean_Tags_1.0

WCC Flow High-High Alarm (FAHH) FIT-1-1
Alarm_Bits_3.0

TON
Timer On Delay
Timer Alarm_Timers_3[0]
Preset 60000
Accum 0
EN
DN

Alarm_Timers_3[0].DN

WCC Flow High-High Alarm (FAHH) FIT-1-1
Alarm_Bits_3.0

50

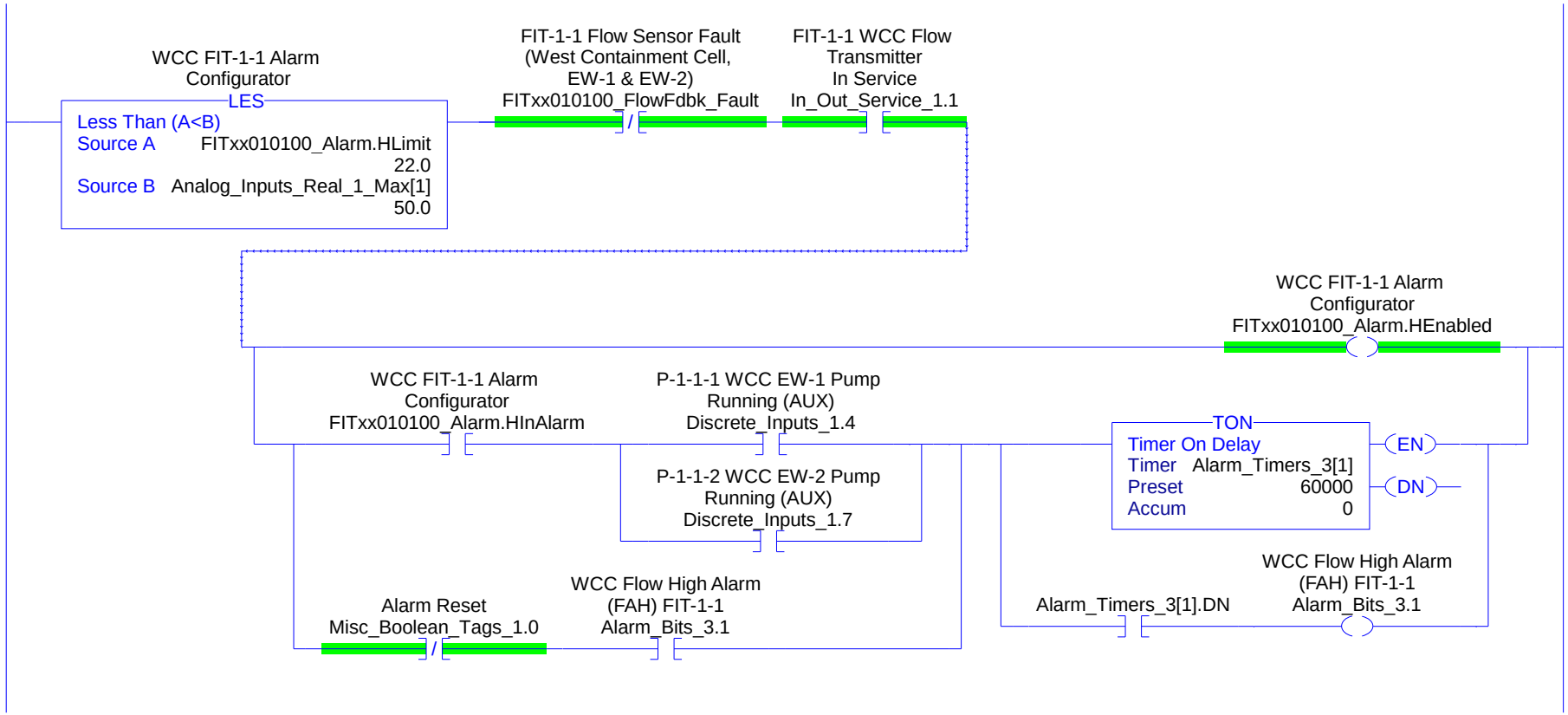
WCC FIT-1-1 Alarm Configurator
LES
Less Than (A<B)
Source A FITxx010100_Alarm.HLimit 22.0
Source B Analog_Inputs_Real_1_Max[1] 50.0
FIT-1-1 Flow Sensor Fault (West Containment Cell, EW-1 & EW-2)
FITxx010100_FlowFdbk_Fault
FIT-1-1 WCC Flow Transmitter In Service
In_Out_Service_1.1
WCC FIT-1-1 Alarm Configurator
FITxx010100_Alarm.HEnabled
WCC FIT-1-1 Alarm Configurator
FITxx010100_Alarm.HInAlarm
P-1-1-1 WCC EW-1 Pump Running (AUX)
Discrete_Inputs_1.4
P-1-1-2 WCC EW-2 Pump Running (AUX)
Discrete_Inputs_1.7
TON
Timer On Delay
Timer Alarm_Timers_3[1]
Preset 60000
Accum 0
EN
DN
Alarm Reset
Misc_Boolean_Tags_1.0
WCC Flow High Alarm (FAH) FIT-1-1
Alarm_Bits_3.1
Alarm_Timers_3[1].DN
WCC Flow High Alarm (FAH) FIT-1-1
Alarm_Bits_3.1

51

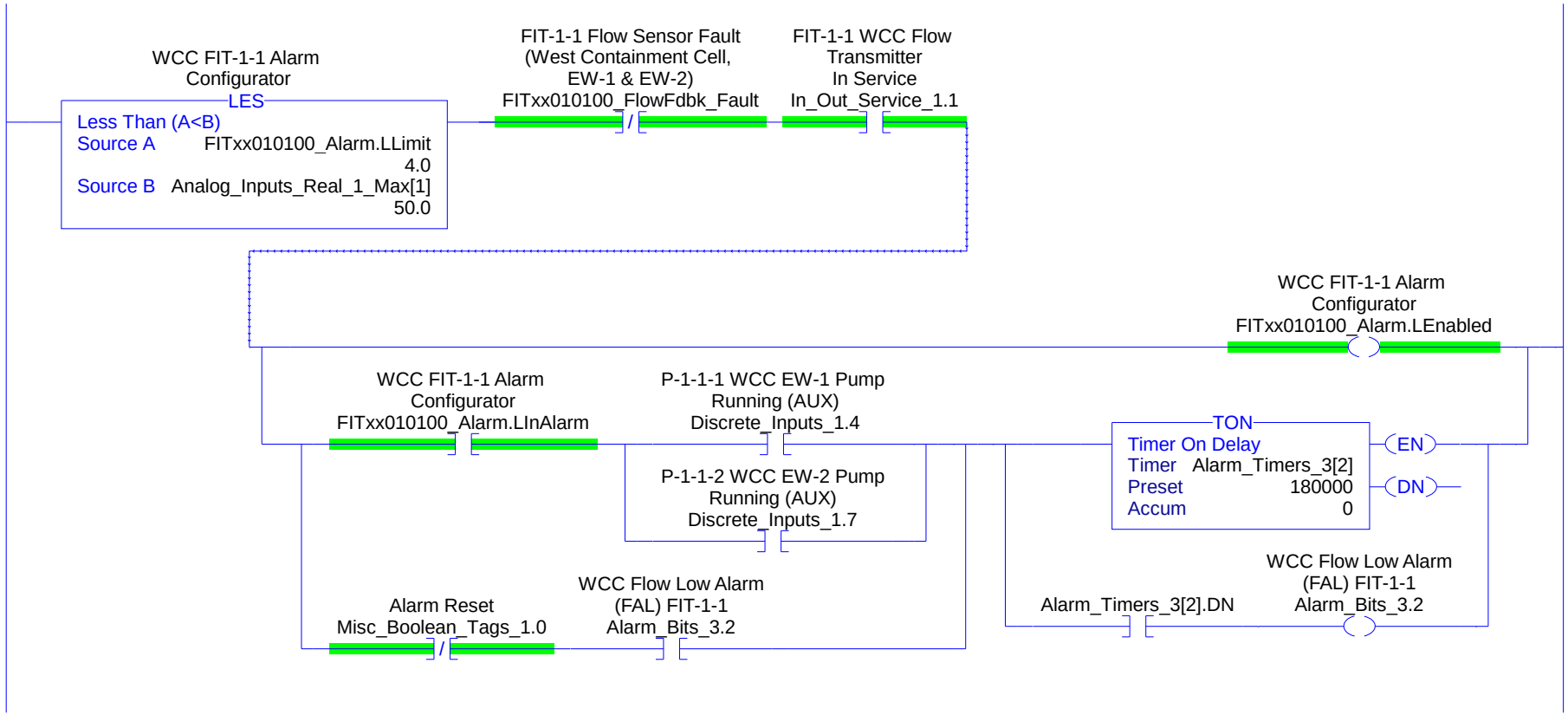
WCC FIT-1-1 Alarm Configurator
LES
Less Than (A<B)
Source A FITxx010100_Alarm.LLimit 4.0
Source B Analog_Inputs_Real_1_Max[1] 50.0
FIT-1-1 Flow Sensor Fault (West Containment Cell, EW-1 & EW-2) FITxx010100_FlowFdbk_Fault
FIT-1-1 WCC Flow Transmitter In Service In_Out_Service_1.1
WCC FIT-1-1 Alarm Configurator FITxx010100_Alarm.LEnabled
WCC FIT-1-1 Alarm Configurator FITxx010100_Alarm.LInAlarm
P-1-1-1 WCC EW-1 Pump Running (AUX) Discrete_Inputs_1.4
P-1-1-2 WCC EW-2 Pump Running (AUX) Discrete_Inputs_1.7
TON
Timer On Delay
Timer Alarm_Timers_3[2]
Preset 180000
Accum 0
EN
DN
Alarm Reset Misc_Boolean_Tags_1.0
WCC Flow Low Alarm (FAL) FIT-1-1 Alarm_Bits_3.2
Alarm_Timers_3[2].DN
WCC Flow Low Alarm (FAL) FIT-1-1 Alarm_Bits_3.2

52

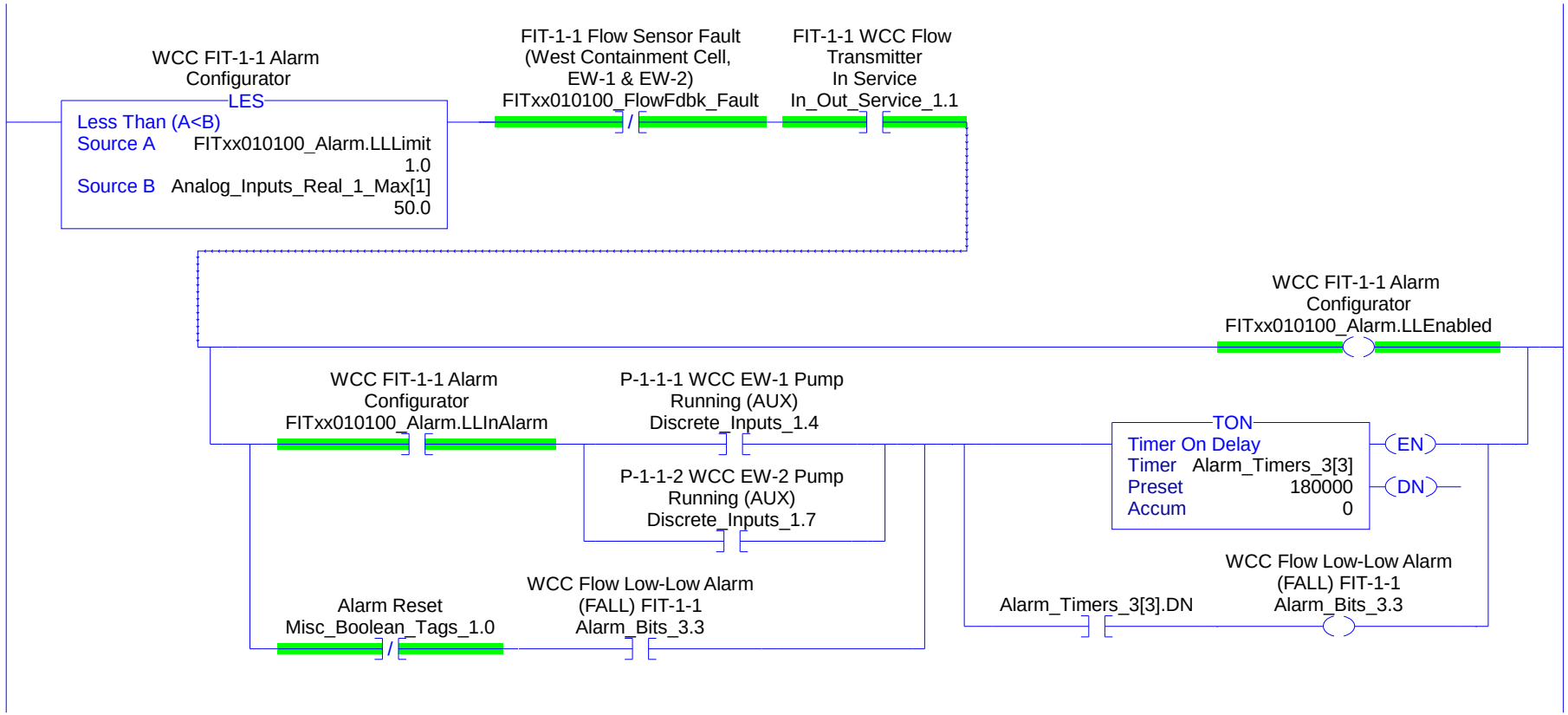
WCC FIT-1-1 Alarm Configurator
LES
Less Than (A<B)
Source A FITxx010100_Alarm.LLLimit 1.0
Source B Analog_Inputs_Real_1_Max[1] 50.0
FIT-1-1 Flow Sensor Fault (West Containment Cell, EW-1 & EW-2) FITxx010100_FlowFdbk_Fault
FIT-1-1 WCC Flow Transmitter In Service In_Out_Service_1.1
WCC FIT-1-1 Alarm Configurator FITxx010100_Alarm.LLEnabled
WCC FIT-1-1 Alarm Configurator FITxx010100_Alarm.LLInAlarm
P-1-1-1 WCC EW-1 Pump Running (AUX) Discrete_Inputs_1.4
P-1-1-2 WCC EW-2 Pump Running (AUX) Discrete_Inputs_1.7
TON
Timer On Delay
Timer Alarm_Timers_3[3]
Preset 180000
Accum 0
EN
DN
Alarm Reset Misc_Boolean_Tags_1.0
WCC Flow Low-Low Alarm (FALL) FIT-1-1 Alarm_Bits_3.3
Alarm_Timers_3[3].DN
WCC Flow Low-Low Alarm (FALL) FIT-1-1 Alarm_Bits_3.3

53

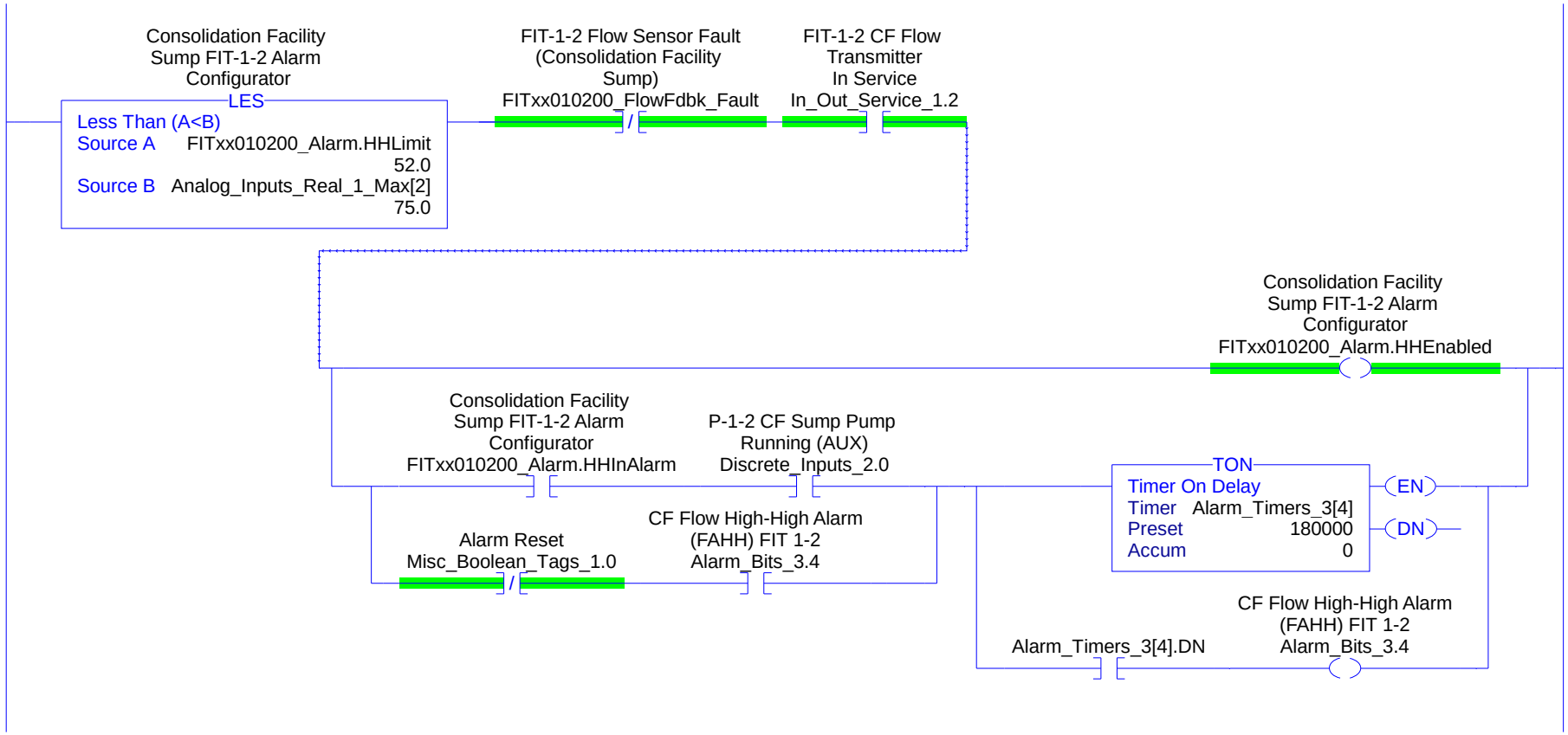
Consolidation Facility Sump FIT-1-2 Alarm Configurator
LES
Less Than (A<B)
Source A FITxx010200_Alarm.HHLimit 52.0
Source B Analog_Inputs_Real_1_Max[2] 75.0
FIT-1-2 Flow Sensor Fault (Consolidation Facility Sump) FITxx010200_FlowFdbk_Fault
FIT-1-2 CF Flow Transmitter In Service In_Out_Service_1.2
Consolidation Facility Sump FIT-1-2 Alarm Configurator FITxx010200_Alarm.HHEnabled
Consolidation Facility Sump FIT-1-2 Alarm Configurator FITxx010200_Alarm.HHInAlarm
P-1-2 CF Sump Pump Running (AUX) Discrete_Inputs_2.0
Alarm Reset Misc_Boolean_Tags_1.0
CF Flow High-High Alarm (FAHH) FIT 1-2 Alarm_Bits_3.4
TON
Timer On Delay
Timer Alarm_Timers_3[4]
Preset 180000
Accum 0
EN
DN
Alarm_Timers_3[4].DN
CF Flow High-High Alarm (FAHH) FIT 1-2 Alarm_Bits_3.4

54

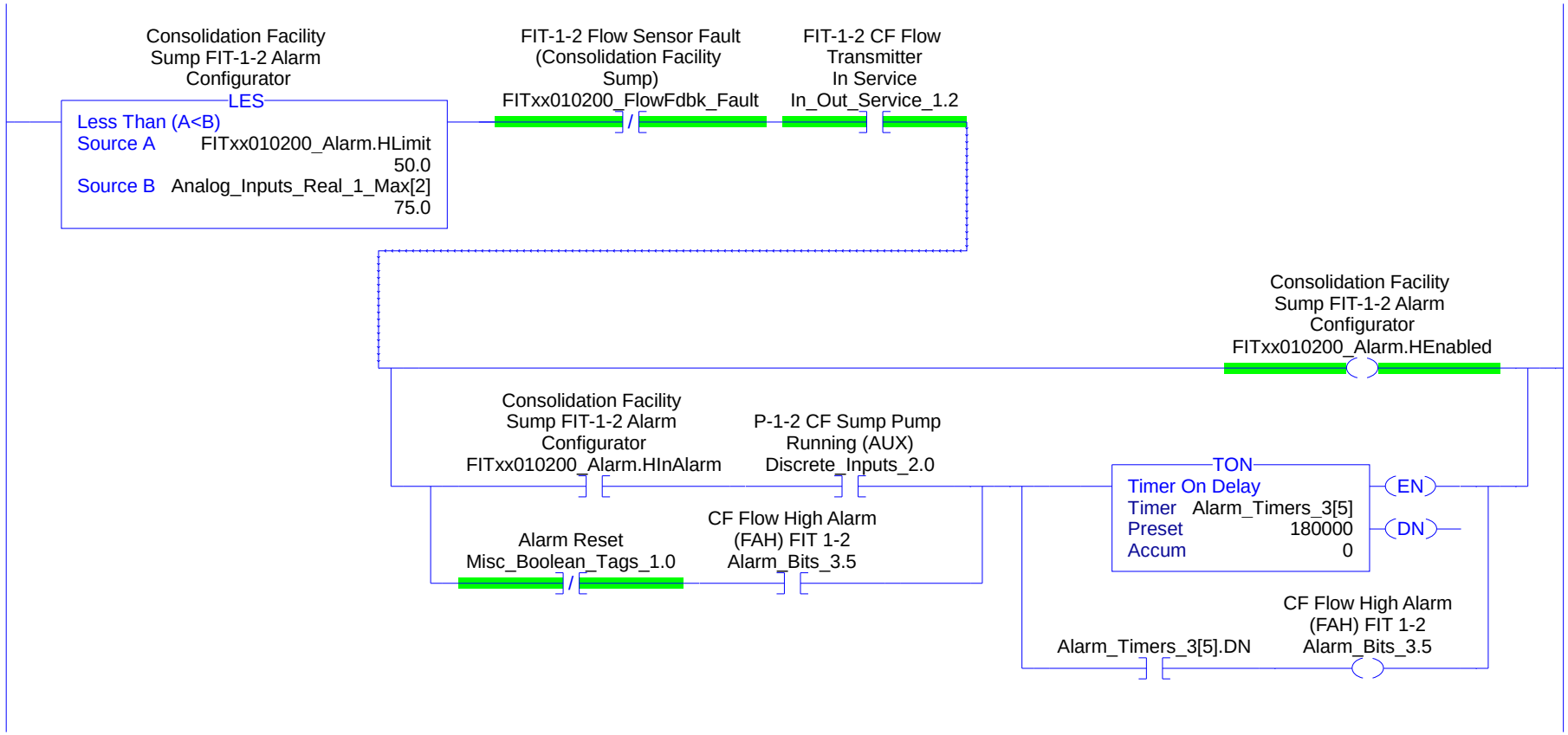
Consolidation Facility Sump FIT-1-2 Alarm Configurator
LES
Less Than (A<B)
Source A FITxx010200_Alarm.HLimit 50.0
Source B Analog_Inputs_Real_1_Max[2] 75.0
FIT-1-2 Flow Sensor Fault (Consolidation Facility Sump) FITxx010200_FlowFdbk_Fault
FIT-1-2 CF Flow Transmitter In Service In_Out_Service_1.2
Consolidation Facility Sump FIT-1-2 Alarm Configurator FITxx010200_Alarm.HEnabled
Consolidation Facility Sump FIT-1-2 Alarm Configurator FITxx010200_Alarm.HInAlarm
P-1-2 CF Sump Pump Running (AUX) Discrete_Inputs_2.0
Alarm Reset Misc_Boolean_Tags_1.0
CF Flow High Alarm (FAH) FIT 1-2 Alarm_Bits_3.5
TON
Timer On Delay
Timer Alarm_Timers_3[5]
Preset 180000
Accum 0
EN
DN
Alarm_Timers_3[5].DN
CF Flow High Alarm (FAH) FIT 1-2 Alarm_Bits_3.5

55

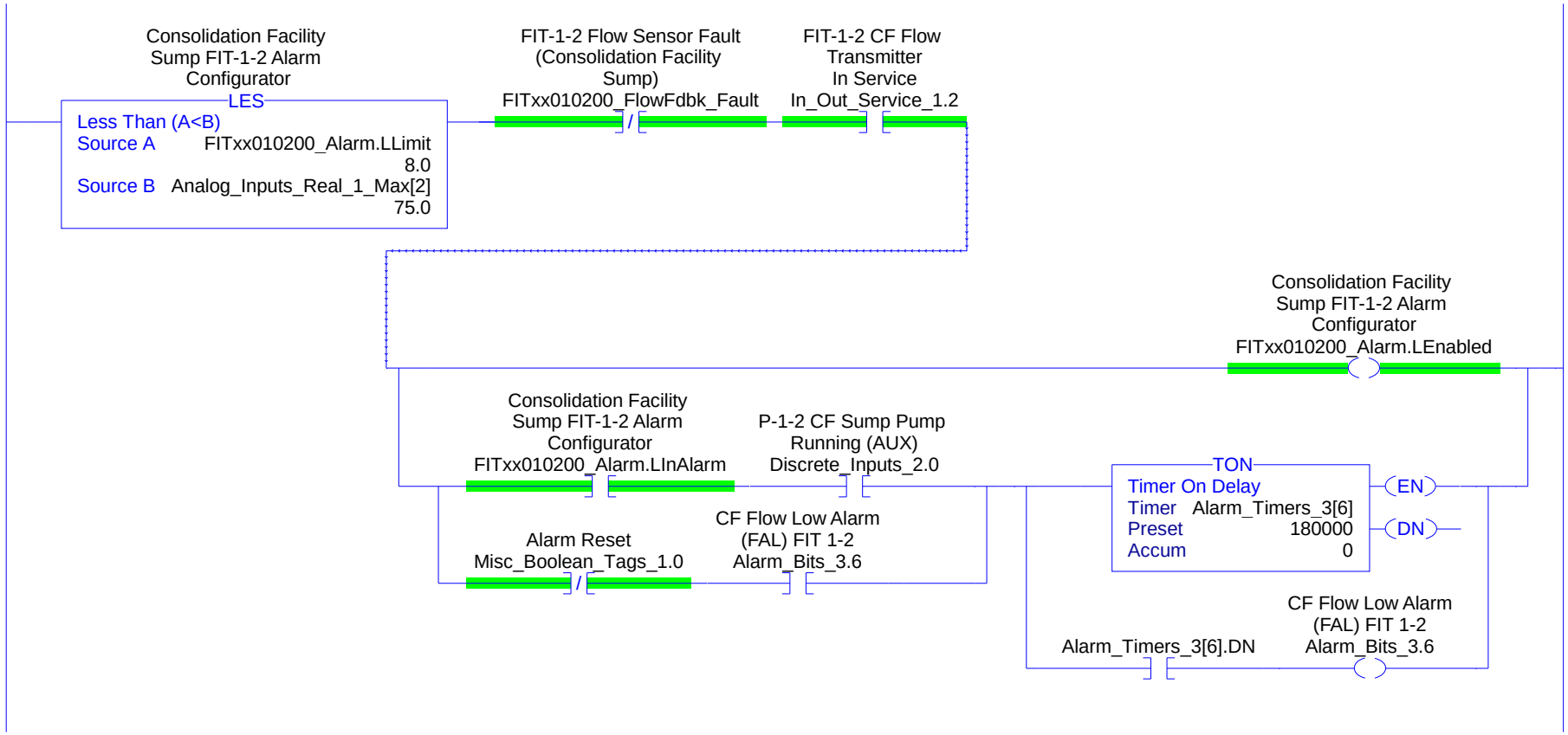
Consolidation Facility Sump FIT-1-2 Alarm Configurator
LES
Less Than (A<B)
Source A FITxx010200_Alarm.LLimit 8.0
Source B Analog_Inputs_Real_1_Max[2] 75.0
FIT-1-2 Flow Sensor Fault (Consolidation Facility Sump) FITxx010200_FlowFdbk_Fault
FIT-1-2 CF Flow Transmitter In Service In_Out_Service_1.2
Consolidation Facility Sump FIT-1-2 Alarm Configurator FITxx010200_Alarm.LEnabled
Consolidation Facility Sump FIT-1-2 Alarm Configurator FITxx010200_Alarm.LInAlarm
P-1-2 CF Sump Pump Running (AUX) Discrete_Inputs_2.0
Alarm Reset Misc_Boolean_Tags_1.0
CF Flow Low Alarm (FAL) FIT 1-2 Alarm_Bits_3.6
TON
Timer On Delay
Timer Alarm_Timers_3[6]
Preset 180000
Accum 0
EN
DN
Alarm_Timers_3[6].DN
CF Flow Low Alarm (FAL) FIT 1-2 Alarm_Bits_3.6

56

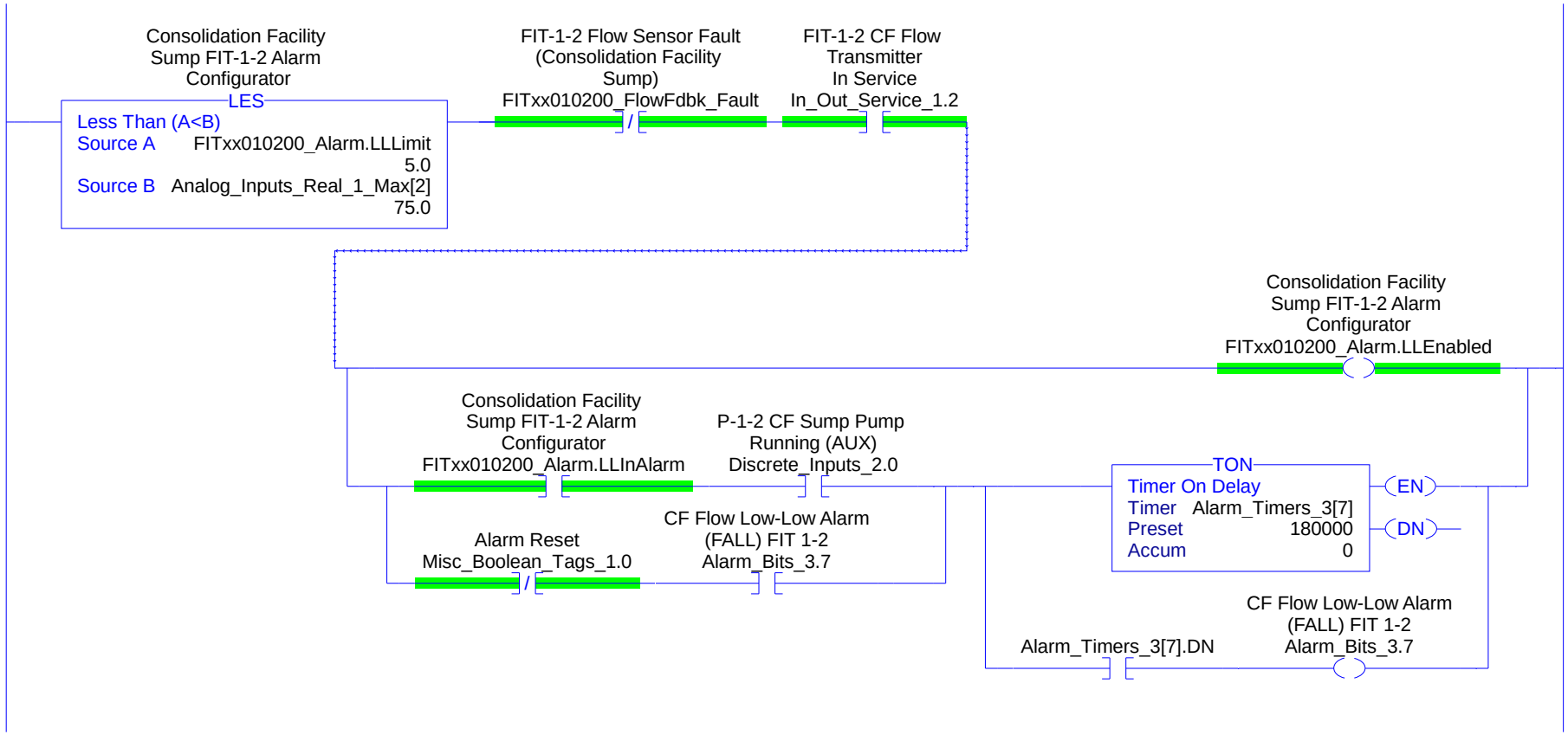
Consolidation Facility Sump FIT-1-2 Alarm Configurator
LES
Less Than (A<B)
Source A FITxx010200_Alarm.LLLimit 5.0
Source B Analog_Inputs_Real_1_Max[2] 75.0
FIT-1-2 Flow Sensor Fault (Consolidation Facility Sump) FITxx010200_FlowFdbk_Fault
FIT-1-2 CF Flow Transmitter In Service In_Out_Service_1.2
Consolidation Facility Sump FIT-1-2 Alarm Configurator FITxx010200_Alarm.LLEnabled
Consolidation Facility Sump FIT-1-2 Alarm Configurator FITxx010200_Alarm.LLInAlarm
P-1-2 CF Sump Pump Running (AUX) Discrete_Inputs_2.0
Alarm Reset Misc_Boolean_Tags_1.0
CF Flow Low-Low Alarm (FALL) FIT 1-2 Alarm_Bits_3.7
TON
Timer On Delay
Timer Alarm_Timers_3[7]
Preset 180000
Accum 0
EN
DN
Alarm_Timers_3[7].DN
CF Flow Low-Low Alarm (FALL) FIT 1-2 Alarm_Bits_3.7

57

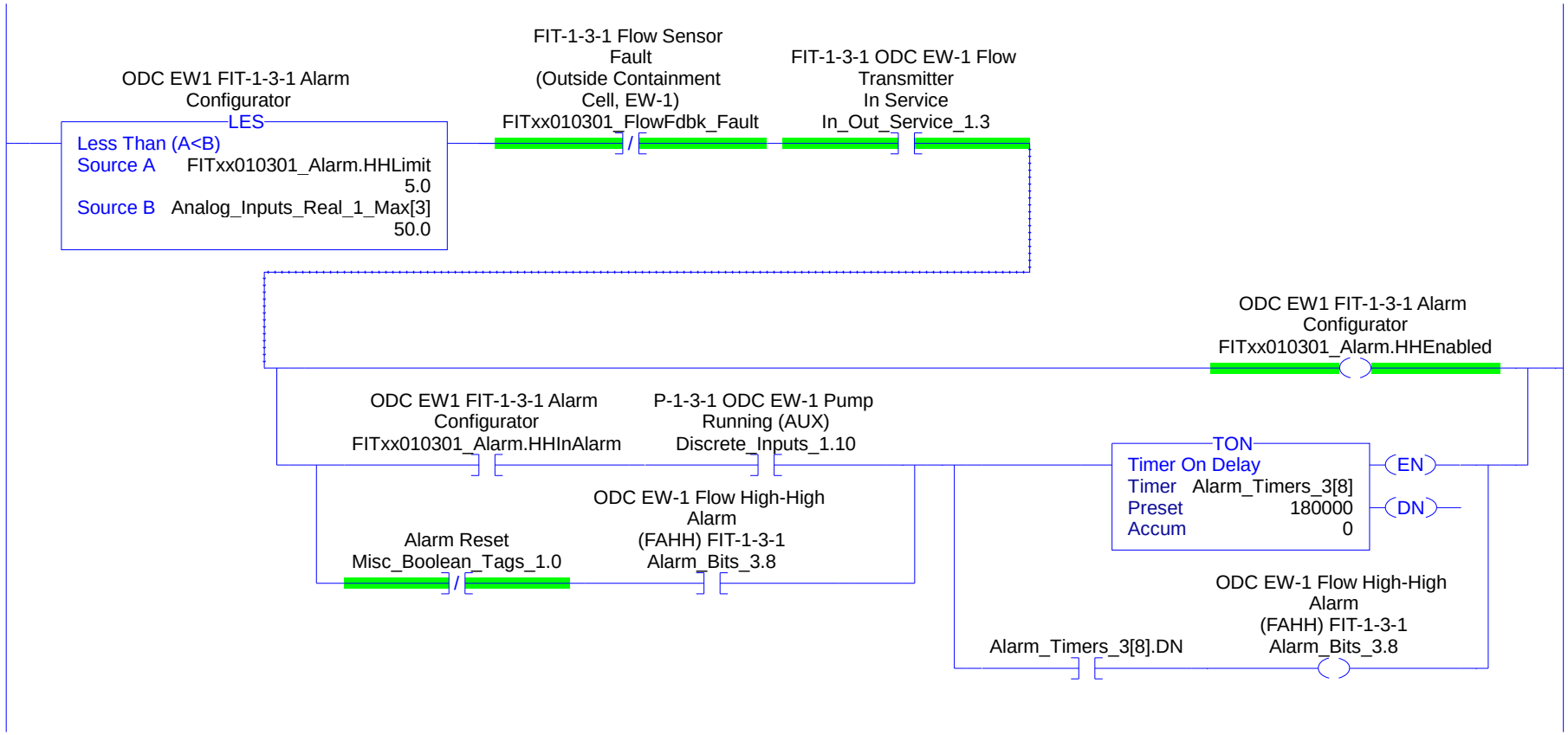
ODC EW1 FIT-1-3-1 Alarm Configurator
LES
Less Than (A<B)
Source A FITxx010301_Alarm.HHLimit 5.0
Source B Analog_Inputs_Real_1_Max[3] 50.0
FIT-1-3-1 Flow Sensor Fault (Outside Containment Cell, EW-1)
FITxx010301_FlowFdbk_Fault
FIT-1-3-1 ODC EW-1 Flow Transmitter In Service
In_Out_Service_1.3
ODC EW1 FIT-1-3-1 Alarm Configurator
FITxx010301_Alarm.HHEnabled
ODC EW1 FIT-1-3-1 Alarm Configurator
FITxx010301_Alarm.HHInAlarm
P-1-3-1 ODC EW-1 Pump Running (AUX)
Discrete_Inputs_1.10
TON
Timer On Delay
Timer Alarm_Timers_3[8]
Preset 180000
Accum 0
EN
DN
ODC EW-1 Flow High-High Alarm (FAHH) FIT-1-3-1
Alarm_Bits_3.8
Alarm Reset
Misc_Boolean_Tags_1.0
ODC EW-1 Flow High-High Alarm (FAHH) FIT-1-3-1
Alarm_Bits_3.8
Alarm_Timers_3[8].DN

58

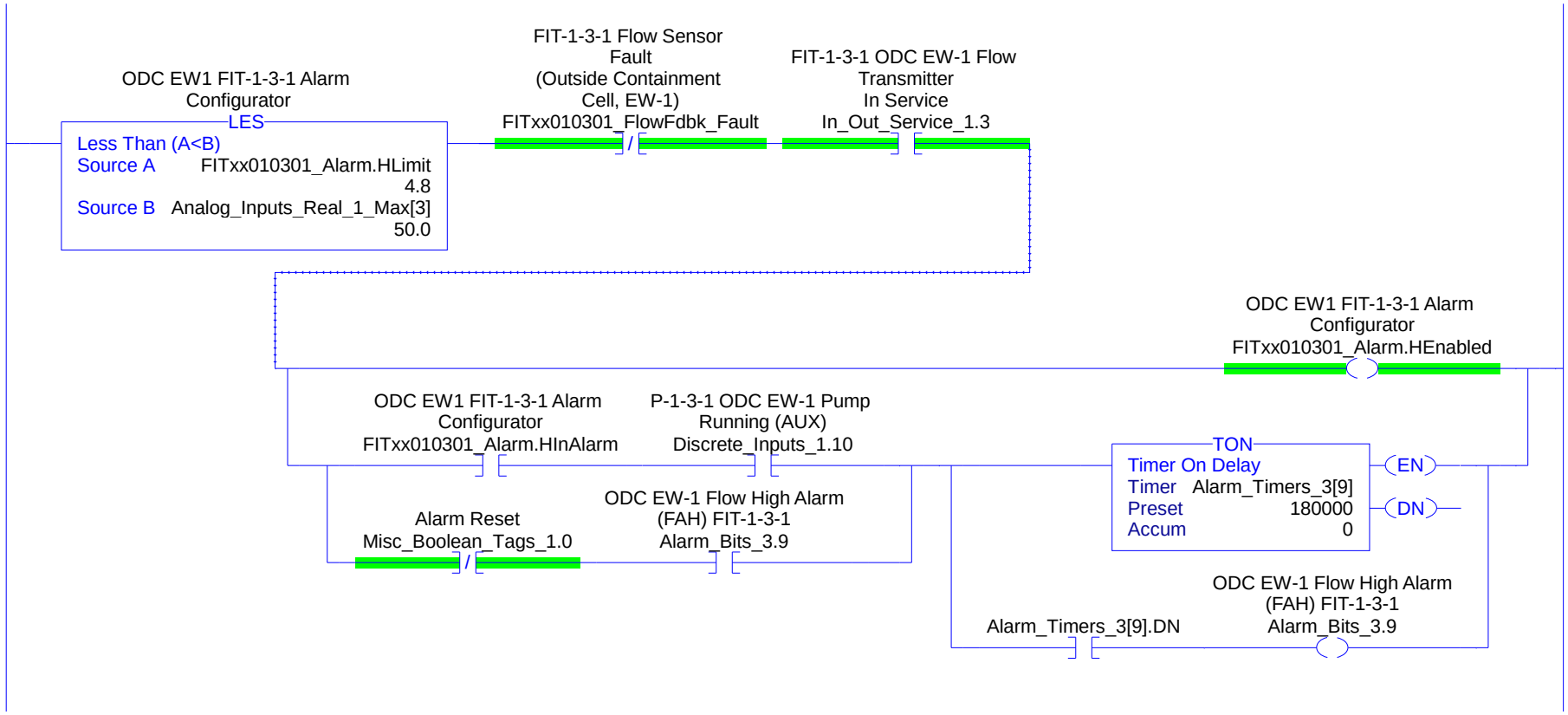
ODC EW1 FIT-1-3-1 Alarm Configurator
LES
Less Than (A<B)
Source A FITxx010301_Alarm.HLimit 4.8
Source B Analog_Inputs_Real_1_Max[3] 50.0
FIT-1-3-1 Flow Sensor Fault (Outside Containment Cell, EW-1)
FITxx010301_FlowFdbk_Fault
FIT-1-3-1 ODC EW-1 Flow Transmitter In Service
In_Out_Service_1.3
ODC EW1 FIT-1-3-1 Alarm Configurator
FITxx010301_Alarm.HEnabled
ODC EW1 FIT-1-3-1 Alarm Configurator
FITxx010301_Alarm.HInAlarm
P-1-3-1 ODC EW-1 Pump Running (AUX)
Discrete_Inputs_1.10
Alarm Reset
Misc_Boolean_Tags_1.0
ODC EW-1 Flow High Alarm (FAH) FIT-1-3-1
Alarm_Bits_3.9
TON
Timer On Delay
Timer Alarm_Timers_3[9]
Preset 180000
Accum 0
EN
DN
Alarm_Timers_3[9].DN
ODC EW-1 Flow High Alarm (FAH) FIT-1-3-1
Alarm_Bits_3.9

59

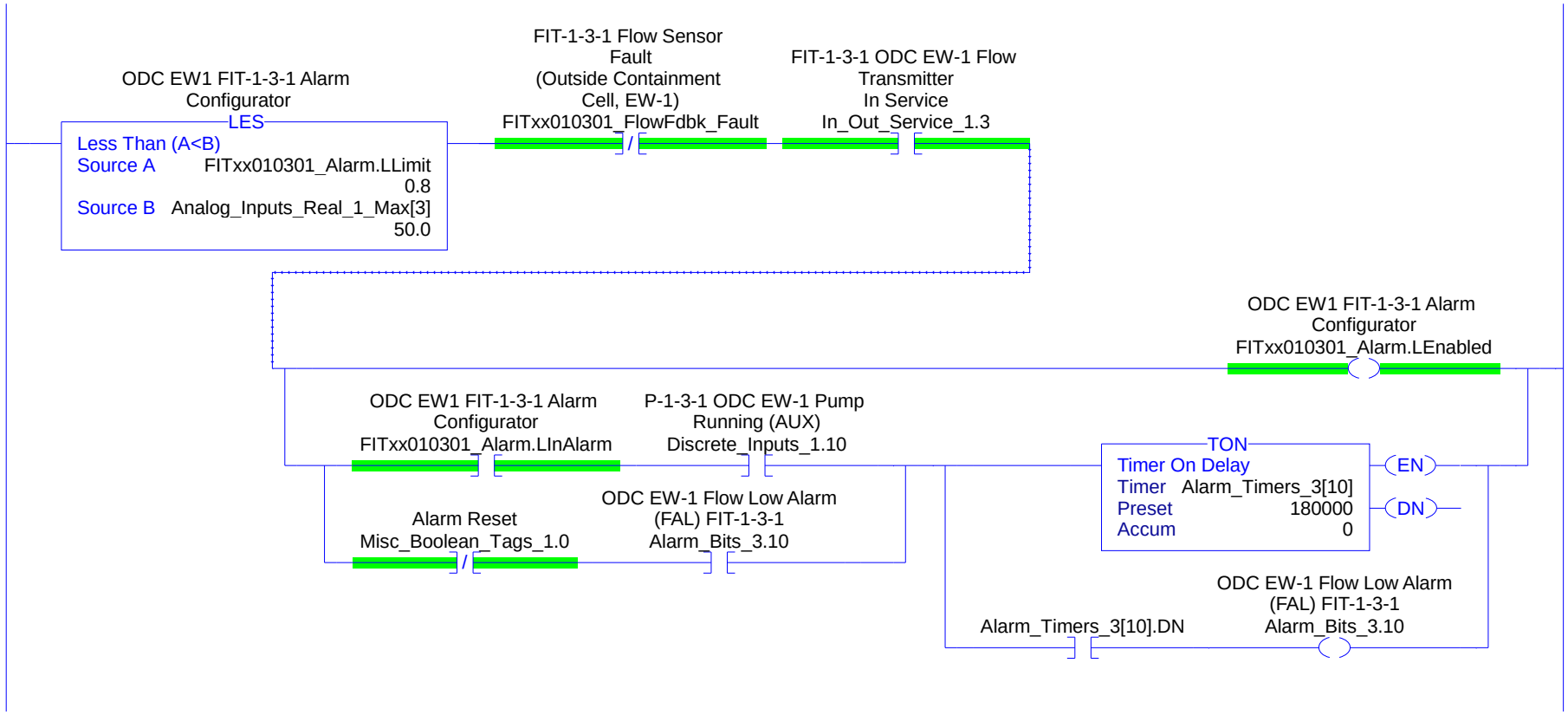
ODC EW1 FIT-1-3-1 Alarm Configurator
LES
Less Than (A<B)
Source A FITxx010301_Alarm.LLimit 0.8
Source B Analog_Inputs_Real_1_Max[3] 50.0
FIT-1-3-1 Flow Sensor Fault (Outside Containment Cell, EW-1)
FITxx010301_FlowFdbk_Fault
FIT-1-3-1 ODC EW-1 Flow Transmitter In Service
In_Out_Service_1.3
ODC EW1 FIT-1-3-1 Alarm Configurator
FITxx010301_Alarm.LEnabled
ODC EW1 FIT-1-3-1 Alarm Configurator
FITxx010301_Alarm.LInAlarm
P-1-3-1 ODC EW-1 Pump Running (AUX)
Discrete_Inputs_1.10
TON
Timer On Delay
Timer Alarm_Timers_3[10]
Preset 180000
Accum 0
EN
DN
Alarm Reset
Misc_Boolean_Tags_1.0
ODC EW-1 Flow Low Alarm (FAL) FIT-1-3-1
Alarm_Bits_3.10
Alarm_Timers_3[10].DN
ODC EW-1 Flow Low Alarm (FAL) FIT-1-3-1
Alarm_Bits_3.10

60

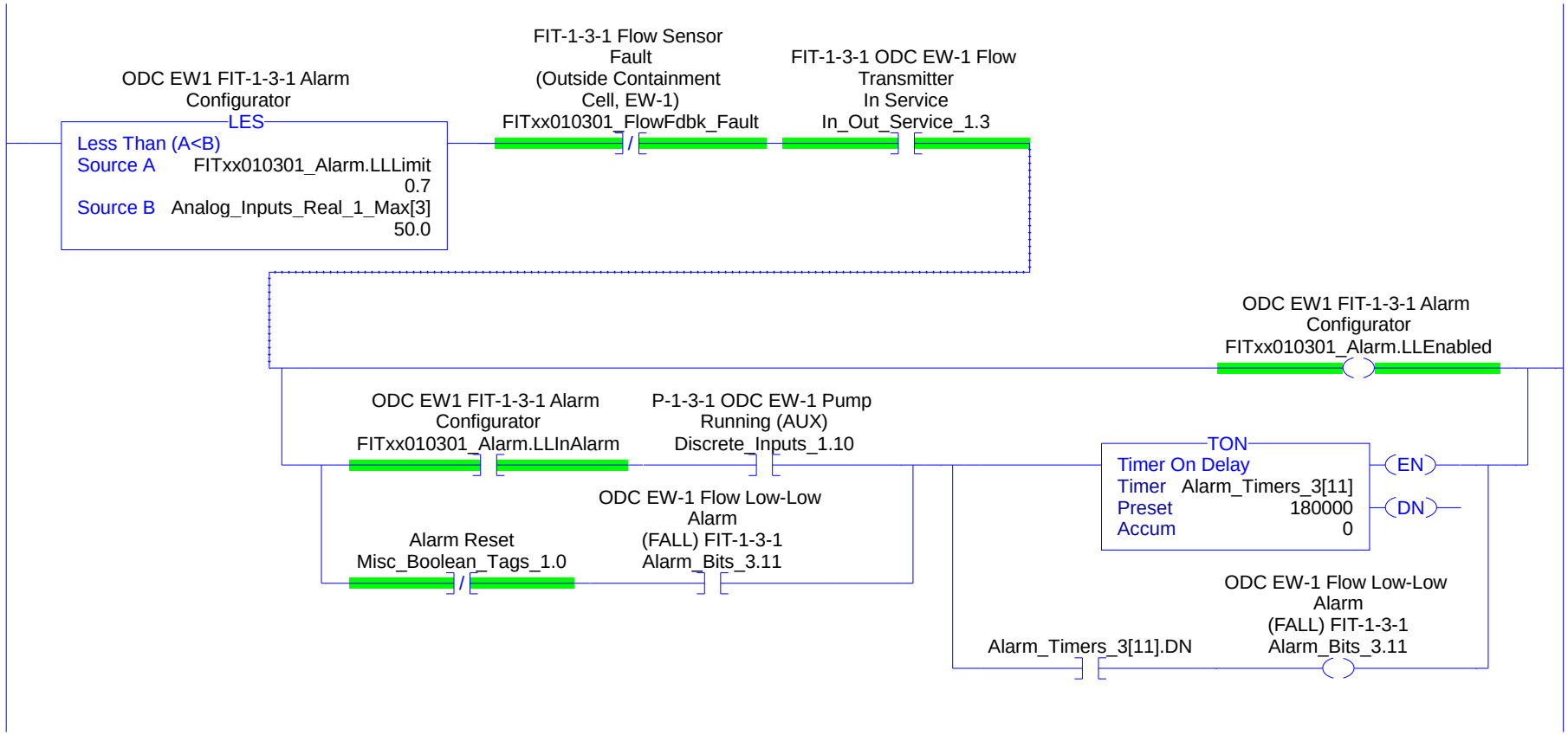
ODC EW1 FIT-1-3-1 Alarm Configurator
LES
Less Than (A<B)
Source A FITxx010301_Alarm.LLLimit 0.7
Source B Analog_Inputs_Real_1_Max[3] 50.0
FIT-1-3-1 Flow Sensor Fault (Outside Containment Cell, EW-1) FITxx010301_FlowFdbk_Fault
FIT-1-3-1 ODC EW-1 Flow Transmitter In Service In_Out_Service_1.3
ODC EW1 FIT-1-3-1 Alarm Configurator FITxx010301_Alarm.LLEnabled
ODC EW1 FIT-1-3-1 Alarm Configurator FITxx010301_Alarm.LLInAlarm
P-1-3-1 ODC EW-1 Pump Running (AUX) Discrete_Inputs_1.10
ODC EW-1 Flow Low-Low Alarm (FALL) FIT-1-3-1 Alarm_Bits_3.11
Alarm Reset Misc_Boolean_Tags_1.0
TON
Timer On Delay
Timer Alarm_Timers_3[11]
Preset 180000
Accum 0
EN
DN
ODC EW-1 Flow Low-Low Alarm (FALL) FIT-1-3-1 Alarm_Bits_3.11
Alarm_Timers_3[11].DN

61

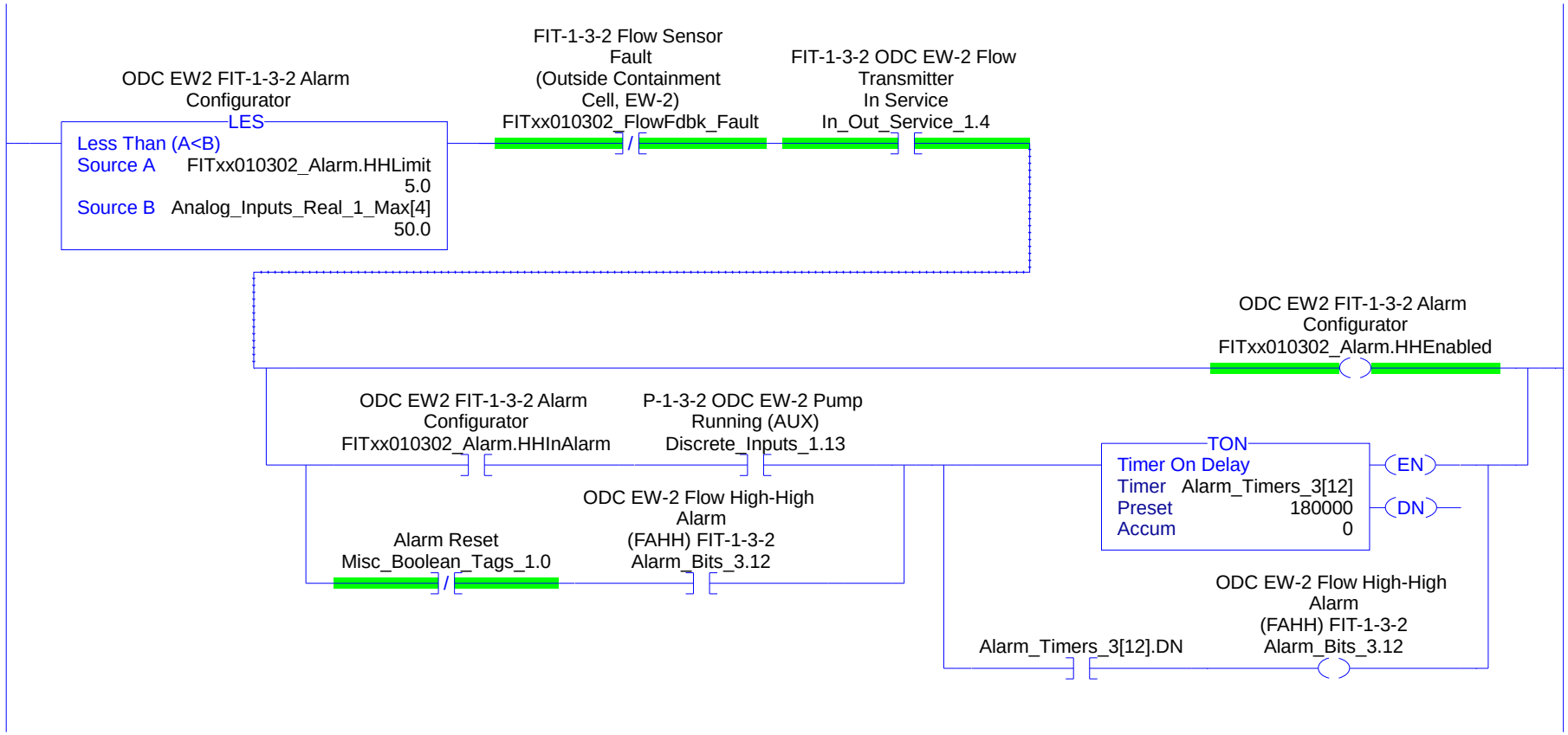
ODC EW2 FIT-1-3-2 Alarm Configurator
LES
Less Than (A<B)
Source A FITxx010302_Alarm.HHLimit 5.0
Source B Analog_Inputs_Real_1_Max[4] 50.0
FIT-1-3-2 Flow Sensor Fault (Outside Containment Cell, EW-2) FITxx010302_FlowFdbk_Fault
FIT-1-3-2 ODC EW-2 Flow Transmitter In Service In_Out_Service_1.4
ODC EW2 FIT-1-3-2 Alarm Configurator FITxx010302_Alarm.HHEnabled
ODC EW2 FIT-1-3-2 Alarm Configurator FITxx010302_Alarm.HHInAlarm
P-1-3-2 ODC EW-2 Pump Running (AUX) Discrete_Inputs_1.13
TON
Timer On Delay
Timer Alarm_Timers_3[12]
Preset 180000
Accum 0
EN
DN
ODC EW-2 Flow High-High Alarm (FAHH) FIT-1-3-2 Alarm_Bits_3.12
Alarm Reset Misc_Boolean_Tags_1.0
ODC EW-2 Flow High-High Alarm (FAHH) FIT-1-3-2 Alarm_Bits_3.12
Alarm_Timers_3[12].DN

62

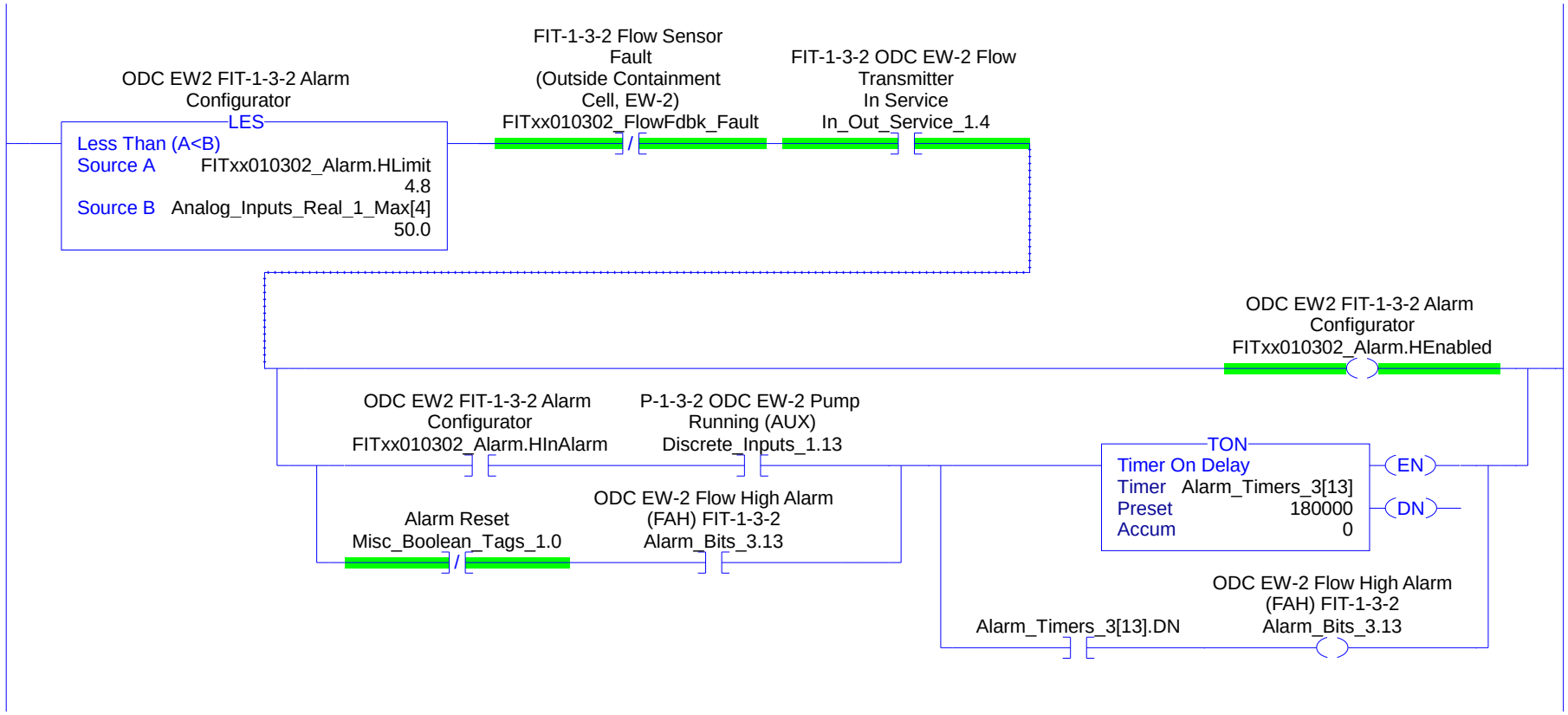
ODC EW2 FIT-1-3-2 Alarm Configurator
LES
Less Than (A<B)
Source A FITxx010302_Alarm.HLimit 4.8
Source B Analog_Inputs_Real_1_Max[4] 50.0
FIT-1-3-2 Flow Sensor Fault (Outside Containment Cell, EW-2) FITxx010302_FlowFdbk_Fault
FIT-1-3-2 ODC EW-2 Flow Transmitter In Service In_Out_Service_1.4
ODC EW2 FIT-1-3-2 Alarm Configurator FITxx010302_Alarm.HEnabled
ODC EW2 FIT-1-3-2 Alarm Configurator FITxx010302_Alarm.HInAlarm
P-1-3-2 ODC EW-2 Pump Running (AUX) Discrete_Inputs_1.13
Alarm Reset Misc_Boolean_Tags_1.0
ODC EW-2 Flow High Alarm (FAH) FIT-1-3-2 Alarm_Bits_3.13
TON
Timer On Delay
Timer Alarm_Timers_3[13]
Preset 180000
Accum 0
EN
DN
Alarm_Timers_3[13].DN
ODC EW-2 Flow High Alarm (FAH) FIT-1-3-2 Alarm_Bits_3.13

63

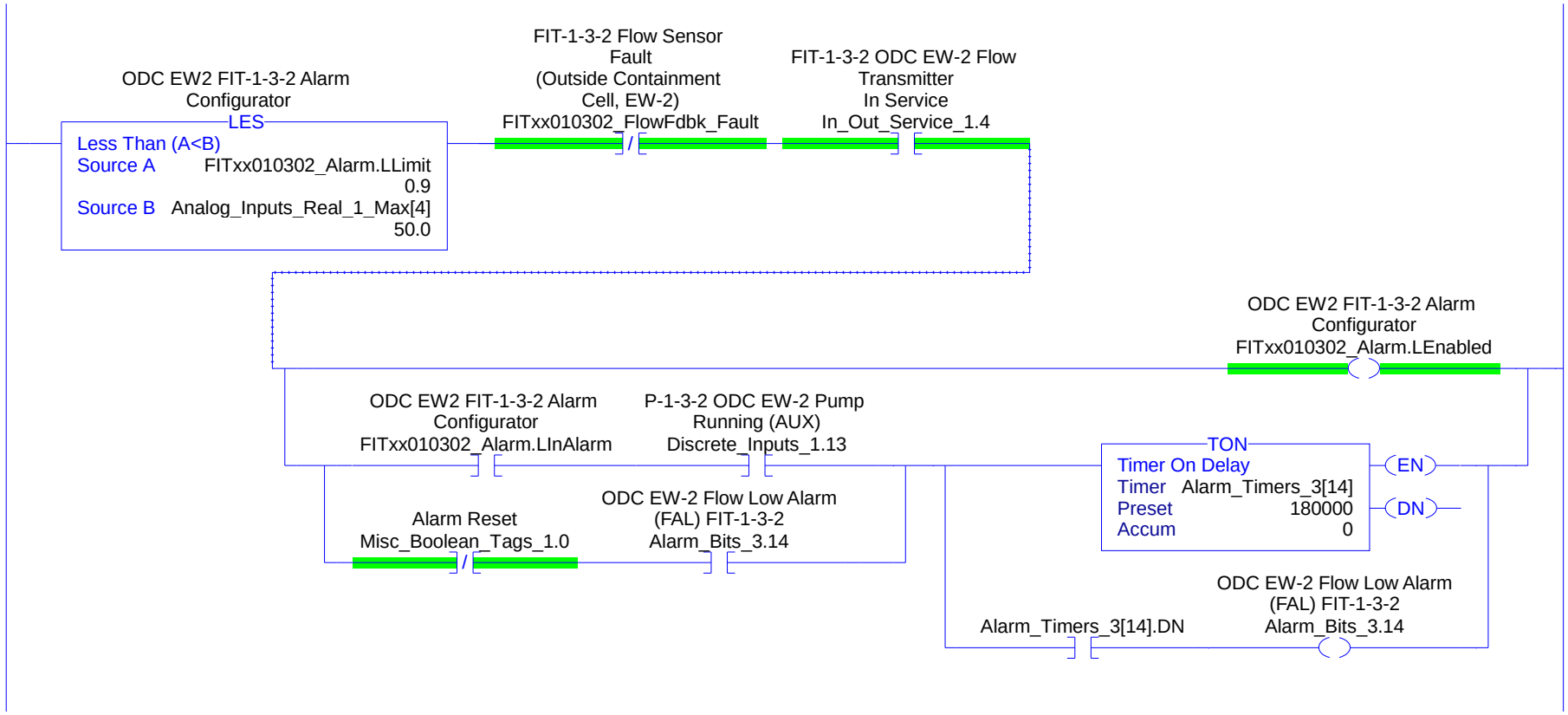
ODC EW2 FIT-1-3-2 Alarm Configurator
LES
Less Than (A<B)
Source A FITxx010302_Alarm.LLimit 0.9
Source B Analog_Inputs_Real_1_Max[4] 50.0
FIT-1-3-2 Flow Sensor Fault (Outside Containment Cell, EW-2) FITxx010302_FlowFdbk_Fault
FIT-1-3-2 ODC EW-2 Flow Transmitter In Service In_Out_Service_1.4
ODC EW2 FIT-1-3-2 Alarm Configurator FITxx010302_Alarm.LEnabled
ODC EW2 FIT-1-3-2 Alarm Configurator FITxx010302_Alarm.LInAlarm
P-1-3-2 ODC EW-2 Pump Running (AUX) Discrete_Inputs_1.13
Alarm Reset Misc_Boolean_Tags_1.0
ODC EW-2 Flow Low Alarm (FAL) FIT-1-3-2 Alarm_Bits_3.14
TON
Timer On Delay
Timer Alarm_Timers_3[14]
Preset 180000
Accum 0
EN
DN
Alarm_Timers_3[14].DN
ODC EW-2 Flow Low Alarm (FAL) FIT-1-3-2 Alarm_Bits_3.14

64

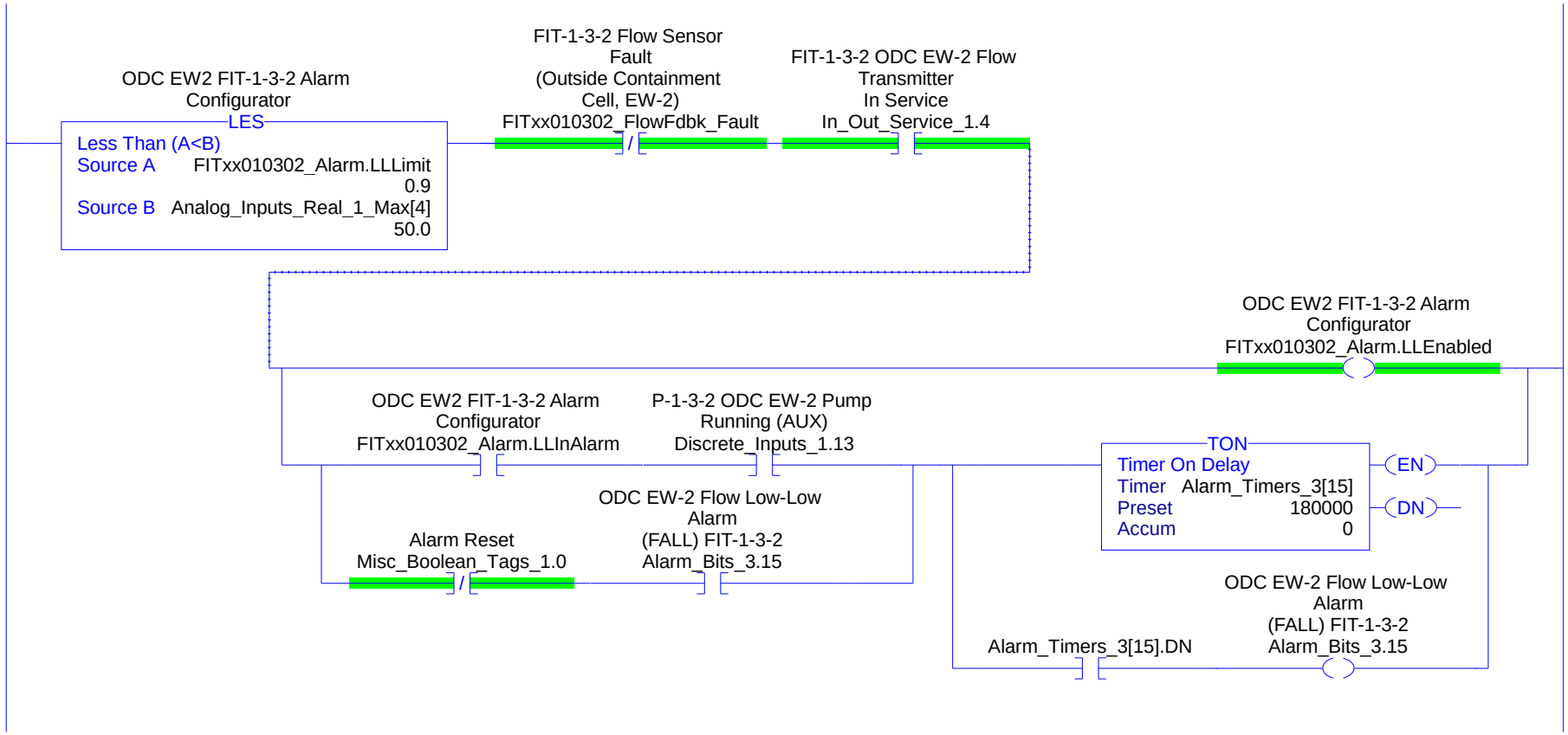
ODC EW2 FIT-1-3-2 Alarm Configurator
LES
Less Than (A<B)
Source A FITxx010302_Alarm.LLLimit 0.9
Source B Analog_Inputs_Real_1_Max[4] 50.0
FIT-1-3-2 Flow Sensor Fault (Outside Containment Cell, EW-2) FITxx010302_FlowFdbk_Fault
FIT-1-3-2 ODC EW-2 Flow Transmitter In Service In_Out_Service_1.4
ODC EW2 FIT-1-3-2 Alarm Configurator FITxx010302_Alarm.LLEnabled
ODC EW2 FIT-1-3-2 Alarm Configurator FITxx010302_Alarm.LLInAlarm
P-1-3-2 ODC EW-2 Pump Running (AUX) Discrete_Inputs_1.13
TON
Timer On Delay
Timer Alarm_Timers_3[15]
Preset 180000
Accum 0
EN
DN
ODC EW-2 Flow Low-Low Alarm (FALL) FIT-1-3-2 Alarm_Bits_3.15
Alarm Reset Misc_Boolean_Tags_1.0
ODC EW-2 Flow Low-Low Alarm (FALL) FIT-1-3-2 Alarm_Bits_3.15
Alarm_Timers_3[15].DN

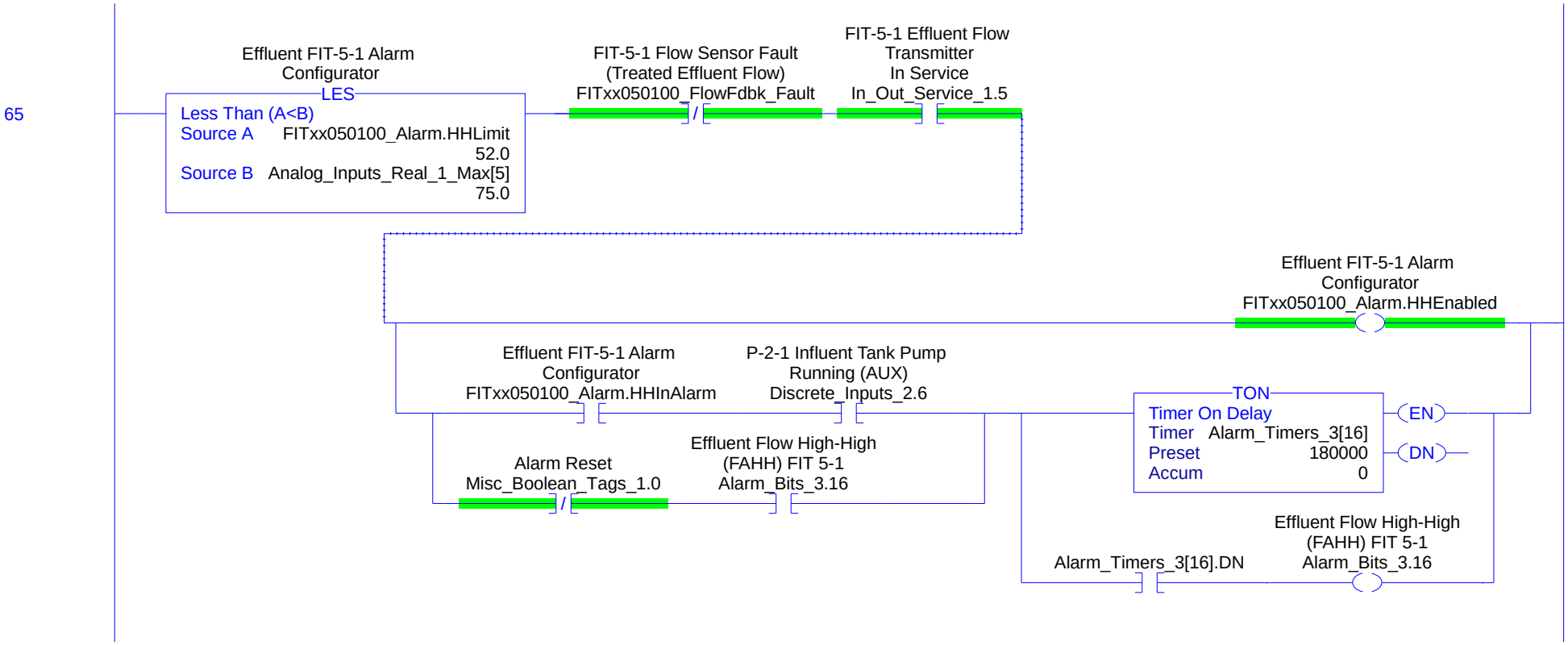
65
Effluent FIT-5-1 Alarm Configurator
LES
Less Than (A<B)
Source A FITxx050100_Alarm.HHLimit 52.0
Source B Analog_Inputs_Real_1_Max[5] 75.0
FIT-5-1 Flow Sensor Fault (Treated Effluent Flow) FITxx050100_FlowFdbk_Fault
FIT-5-1 Effluent Flow Transmitter In Service In_Out_Service_1.5
Effluent FIT-5-1 Alarm Configurator FITxx050100_Alarm.HHEnabled
Effluent FIT-5-1 Alarm Configurator FITxx050100_Alarm.HHInAlarm
P-2-1 Influent Tank Pump Running (AUX) Discrete_Inputs_2.6
Alarm Reset Misc_Boolean_Tags_1.0
Effluent Flow High-High (FAHH) FIT 5-1 Alarm_Bits_3.16
TON
Timer On Delay
Timer Alarm_Timers_3[16]
Preset 180000
Accum 0
EN
DN
Alarm_Timers_3[16].DN
Effluent Flow High-High (FAHH) FIT 5-1 Alarm_Bits_3.16

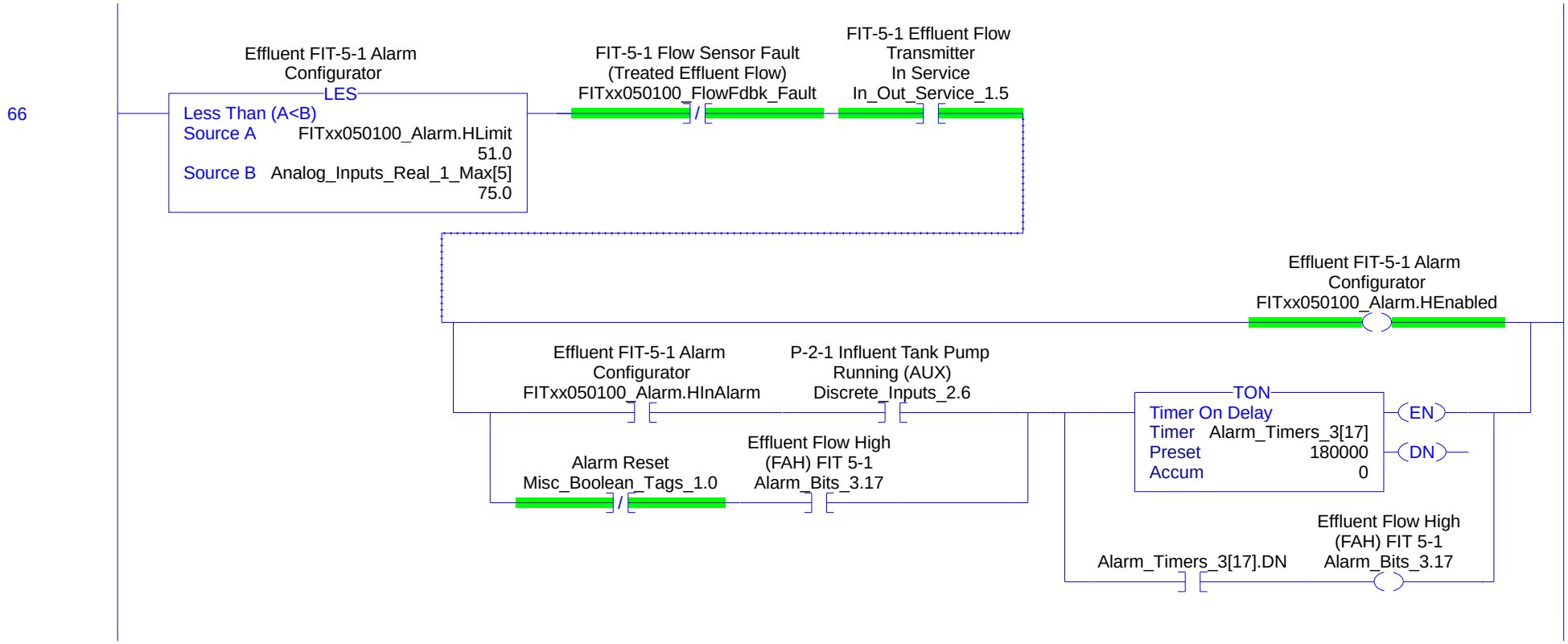
66
Effluent FIT-5-1 Alarm Configurator
LES
Less Than (A<B)
Source A FITxx050100_Alarm.HLimit 51.0
Source B Analog_Inputs_Real_1_Max[5] 75.0
FIT-5-1 Flow Sensor Fault (Treated Effluent Flow) FITxx050100_FlowFdbk_Fault
FIT-5-1 Effluent Flow Transmitter In Service In_Out_Service_1.5
Effluent FIT-5-1 Alarm Configurator FITxx050100_Alarm.HEnabled
Effluent FIT-5-1 Alarm Configurator FITxx050100_Alarm.HInAlarm
P-2-1 Influent Tank Pump Running (AUX) Discrete_Inputs_2.6
Alarm Reset Misc_Boolean_Tags_1.0
Effluent Flow High (FAH) FIT 5-1 Alarm_Bits_3.17
TON
Timer On Delay
Timer Alarm_Timers_3[17]
Preset 180000
Accum 0
EN
DN
Alarm_Timers_3[17].DN
Effluent Flow High (FAH) FIT 5-1 Alarm_Bits_3.17

67

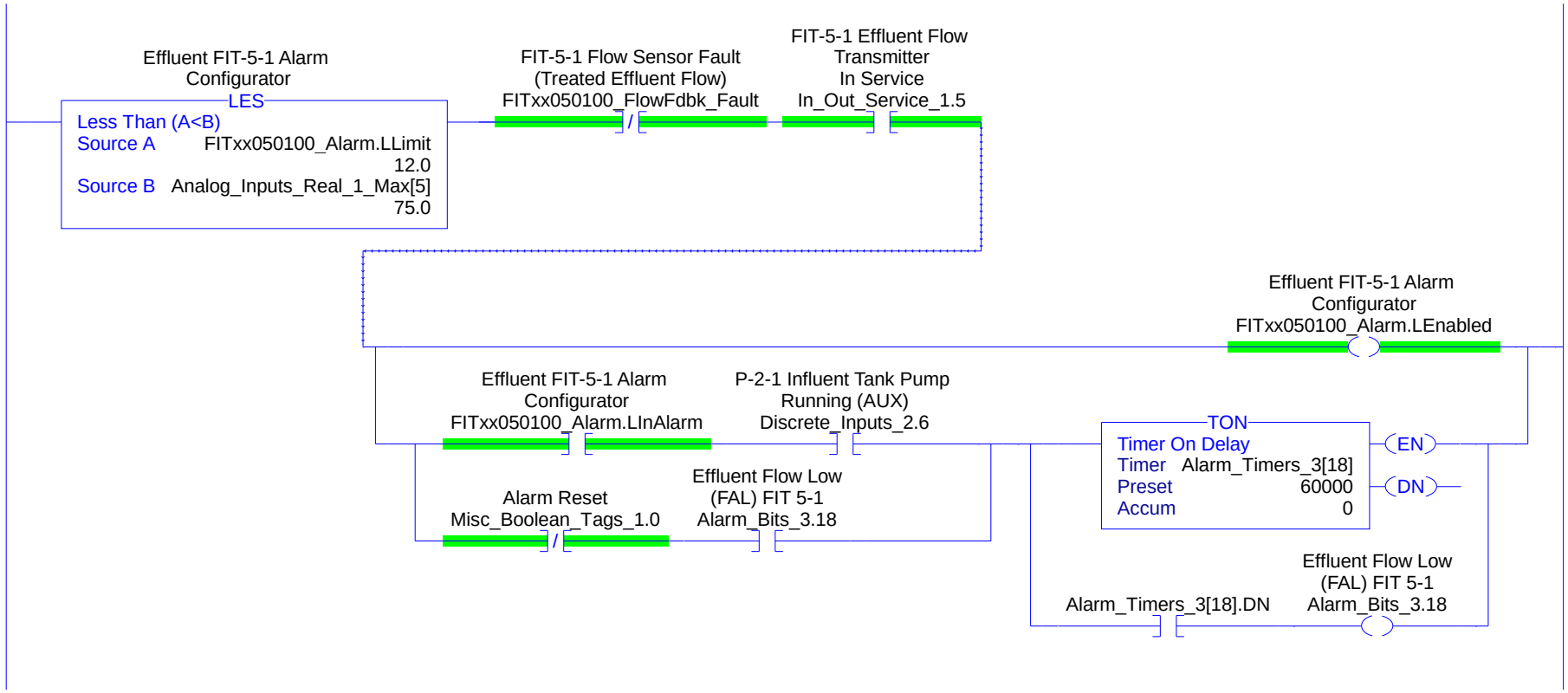
Effluent FIT-5-1 Alarm Configurator
LES
Less Than (A<B)
Source A FITxx050100_Alarm.LLimit 12.0
Source B Analog_Inputs_Real_1_Max[5] 75.0
FIT-5-1 Flow Sensor Fault (Treated Effluent Flow) FITxx050100_FlowFdbk_Fault
FIT-5-1 Effluent Flow Transmitter In Service In_Out_Service_1.5
Effluent FIT-5-1 Alarm Configurator FITxx050100_Alarm.LEnabled
Effluent FIT-5-1 Alarm Configurator FITxx050100_Alarm.LInAlarm
P-2-1 Influent Tank Pump Running (AUX) Discrete_Inputs_2.6
Alarm Reset Misc_Boolean_Tags_1.0
Effluent Flow Low (FAL) FIT 5-1 Alarm_Bits_3.18
TON
Timer On Delay
Timer Alarm_Timers_3[18]
Preset 60000
Accum 0
EN
DN
Alarm_Timers_3[18].DN
Effluent Flow Low (FAL) FIT 5-1 Alarm_Bits_3.18

68

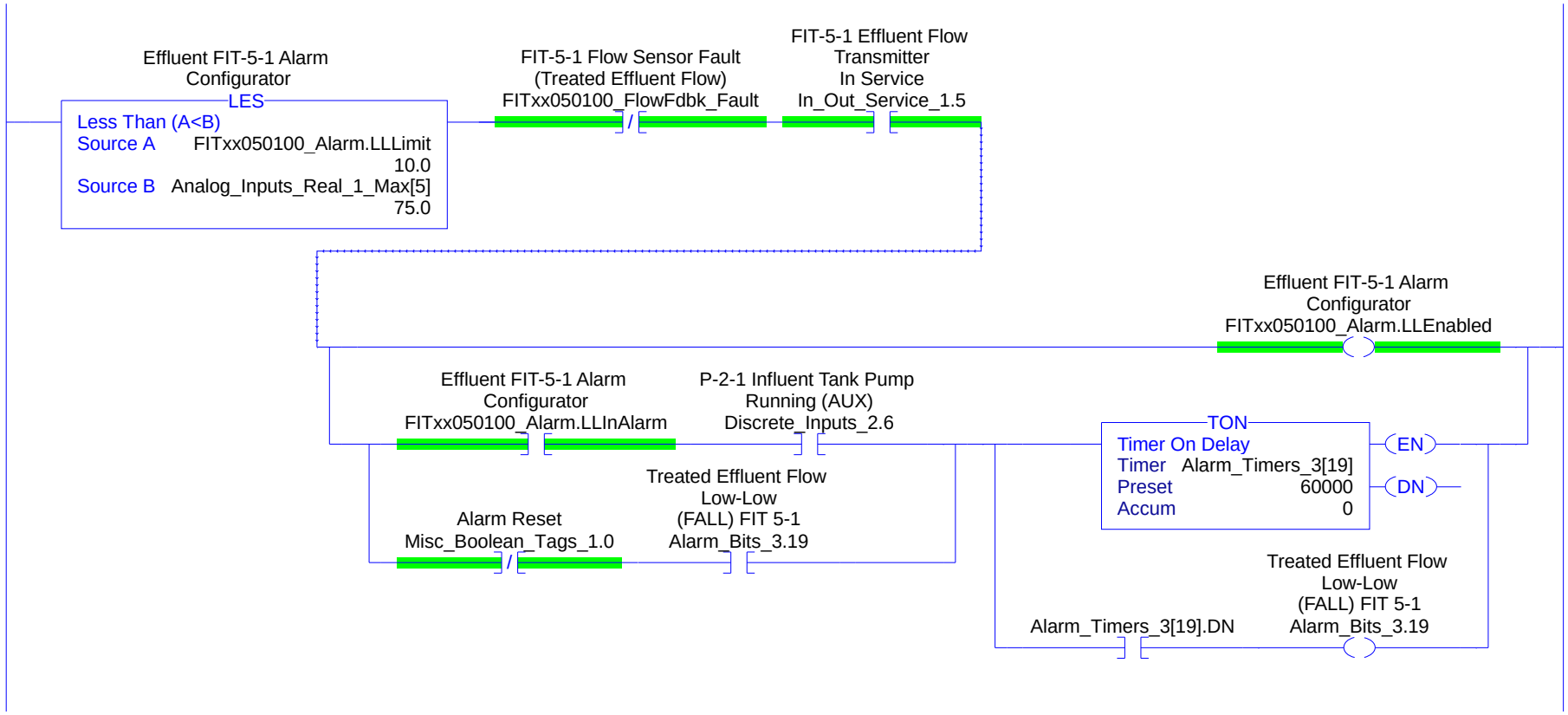
Effluent FIT-5-1 Alarm Configurator
LES
Less Than (A<B)
Source A FITxx050100_Alarm.LLLimit 10.0
Source B Analog_Inputs_Real_1_Max[5] 75.0
FIT-5-1 Flow Sensor Fault (Treated Effluent Flow) FITxx050100_FlowFdbk_Fault
FIT-5-1 Effluent Flow Transmitter In Service In_Out_Service_1.5
Effluent FIT-5-1 Alarm Configurator FITxx050100_Alarm.LLEnabled
Effluent FIT-5-1 Alarm Configurator FITxx050100_Alarm.LLInAlarm
P-2-1 Influent Tank Pump Running (AUX) Discrete_Inputs_2.6
Alarm Reset Misc_Boolean_Tags_1.0
Treated Effluent Flow Low-Low (FALL) FIT 5-1 Alarm_Bits_3.19
TON
Timer On Delay
Timer Alarm_Timers_3[19]
Preset 60000
Accum 0
EN
DN
Alarm_Timers_3[19].DN
Treated Effluent Flow Low-Low (FALL) FIT 5-1 Alarm_Bits_3.19

69

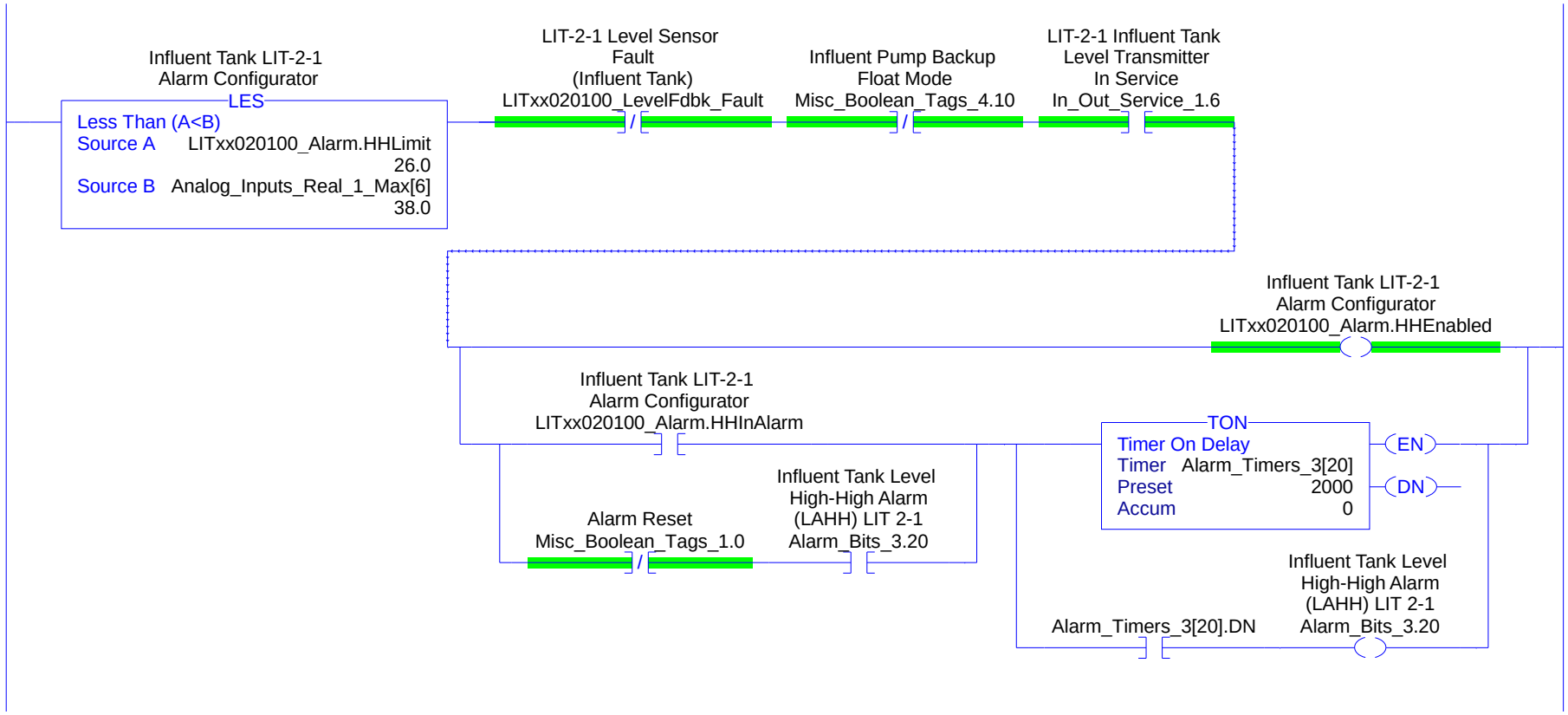
Influent Tank LIT-2-1
Alarm Configurator
LES
Less Than (A<B)
Source A LITxx020100_Alarm.HHLimit
26.0
Source B Analog_Inputs_Real_1_Max[6]
38.0
LIT-2-1 Level Sensor
Fault
(Influent Tank)
LITxx020100_LevelFdbk_Fault
Influent Pump Backup
Float Mode
Misc_Boolean_Tags_4.10
LIT-2-1 Influent Tank
Level Transmitter
In Service
In_Out_Service_1.6
Influent Tank LIT-2-1
Alarm Configurator
LITxx020100_Alarm.HHEnabled
Influent Tank LIT-2-1
Alarm Configurator
LITxx020100_Alarm.HHInAlarm
TON
Timer On Delay
Timer Alarm_Timers_3[20]
Preset 2000
Accum 0
EN
DN
Influent Tank Level
High-High Alarm
(LAHH) LIT 2-1
Alarm_Bits_3.20
Alarm Reset
Misc_Boolean_Tags_1.0
Influent Tank Level
High-High Alarm
(LAHH) LIT 2-1
Alarm_Bits_3.20
Alarm_Timers_3[20].DN

70

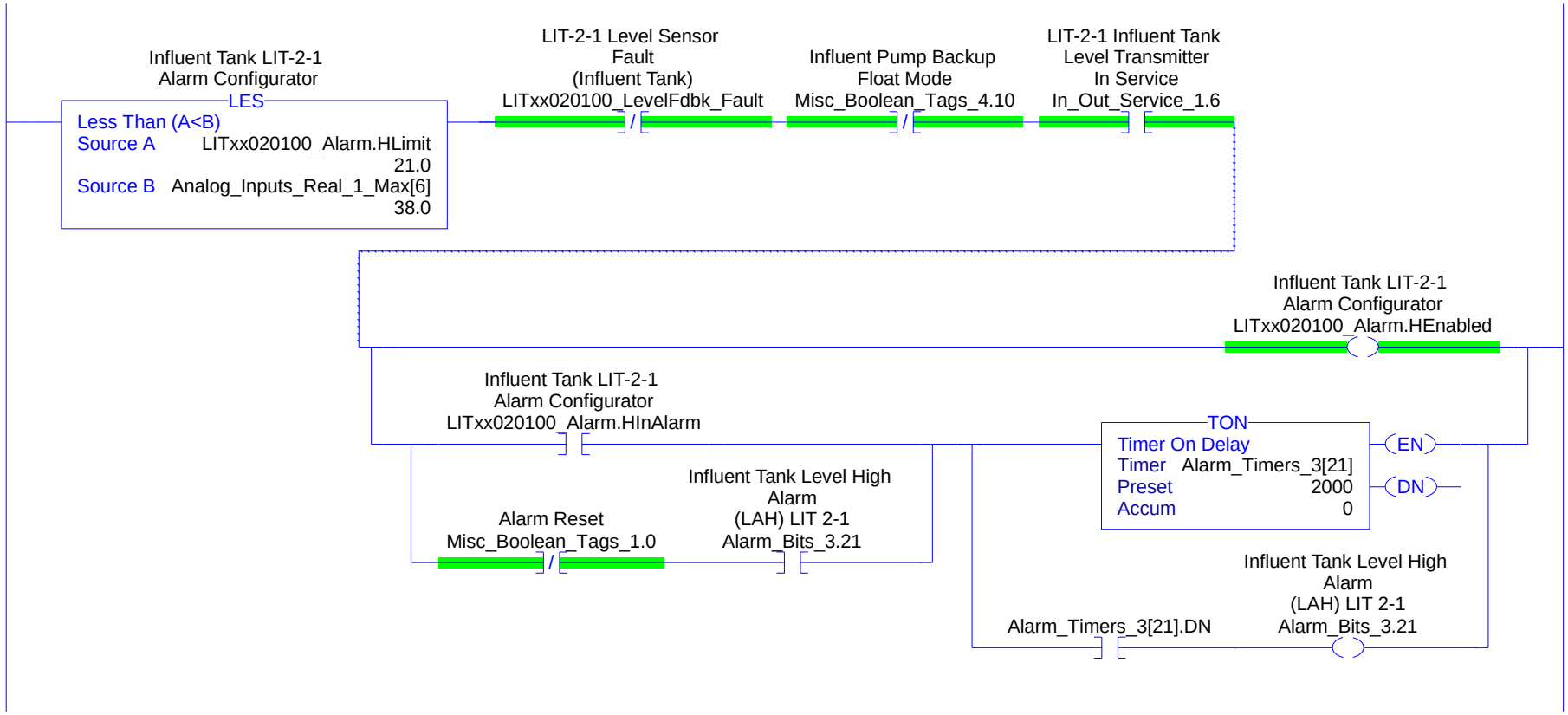
Influent Tank LIT-2-1
Alarm Configurator
LES
Less Than (A<B)
Source A LITxx020100_Alarm.HLimit
21.0
Source B Analog_Inputs_Real_1_Max[6]
38.0
LIT-2-1 Level Sensor
Fault
(Influent Tank)
LITxx020100_LevelFdbk_Fault
Influent Pump Backup
Float Mode
Misc_Boolean_Tags_4.10
LIT-2-1 Influent Tank
Level Transmitter
In Service
In_Out_Service_1.6
Influent Tank LIT-2-1
Alarm Configurator
LITxx020100_Alarm.HEnabled
Influent Tank LIT-2-1
Alarm Configurator
LITxx020100_Alarm.HInAlarm
TON
Timer On Delay
Timer Alarm_Timers_3[21]
Preset 2000
Accum 0
EN
DN
Influent Tank Level High
Alarm
(LAH) LIT 2-1
Alarm_Bits_3.21
Alarm Reset
Misc_Boolean_Tags_1.0
Influent Tank Level High
Alarm
(LAH) LIT 2-1
Alarm_Bits_3.21
Alarm_Timers_3[21].DN

71

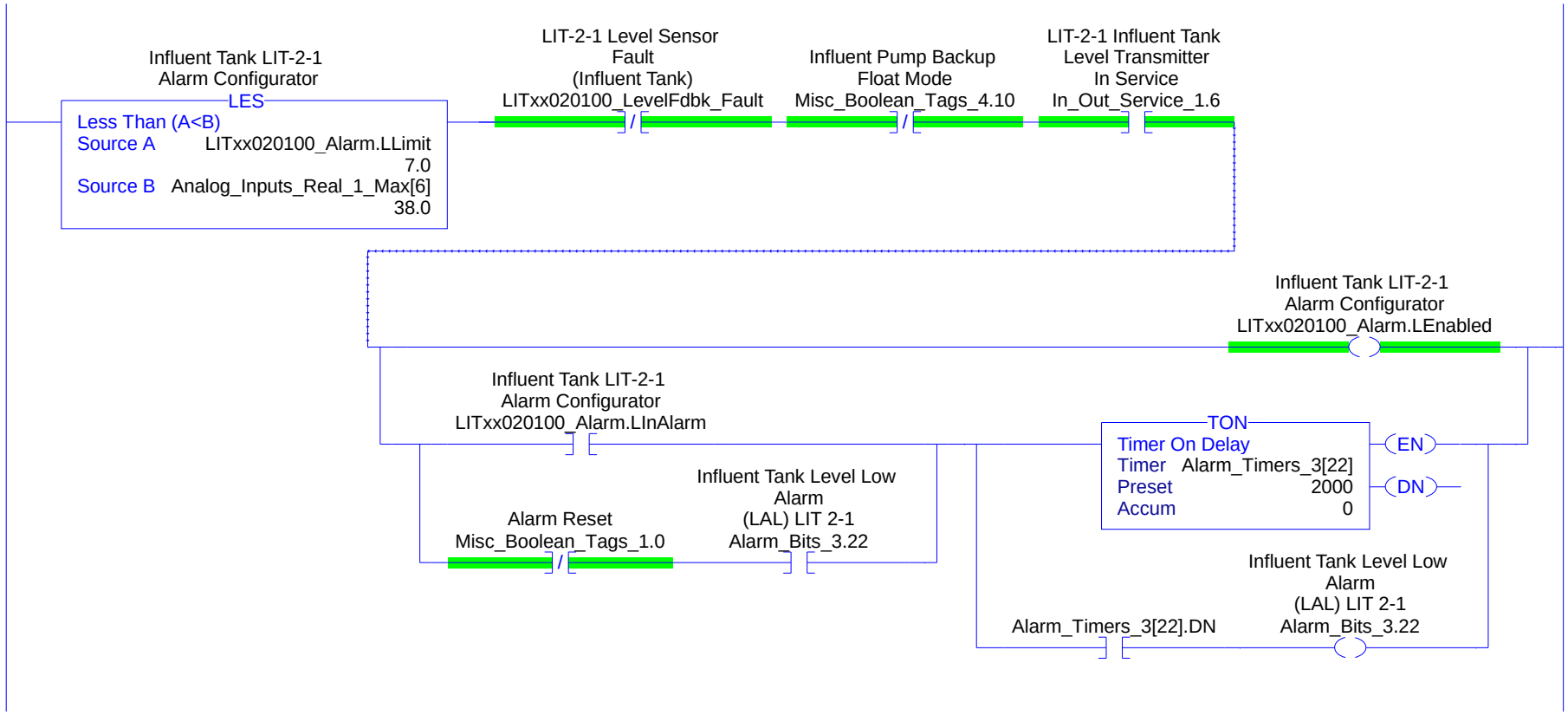
Influent Tank LIT-2-1
Alarm Configurator
LES
Less Than (A<B)
Source A LITxx020100_Alarm.LLimit
7.0
Source B Analog_Inputs_Real_1_Max[6]
38.0
LIT-2-1 Level Sensor
Fault
(Influent Tank)
LITxx020100_LevelFdbk_Fault
Influent Pump Backup
Float Mode
Misc_Boolean_Tags_4.10
LIT-2-1 Influent Tank
Level Transmitter
In Service
In_Out_Service_1.6
Influent Tank LIT-2-1
Alarm Configurator
LITxx020100_Alarm.LEnabled
Influent Tank LIT-2-1
Alarm Configurator
LITxx020100_Alarm.LInAlarm
TON
Timer On Delay
Timer Alarm_Timers_3[22]
Preset 2000
Accum 0
EN
DN
Influent Tank Level Low
Alarm
(LAL) LIT 2-1
Alarm_Bits_3.22
Alarm Reset
Misc_Boolean_Tags_1.0
Influent Tank Level Low
Alarm
(LAL) LIT 2-1
Alarm_Bits_3.22
Alarm_Timers_3[22].DN

72

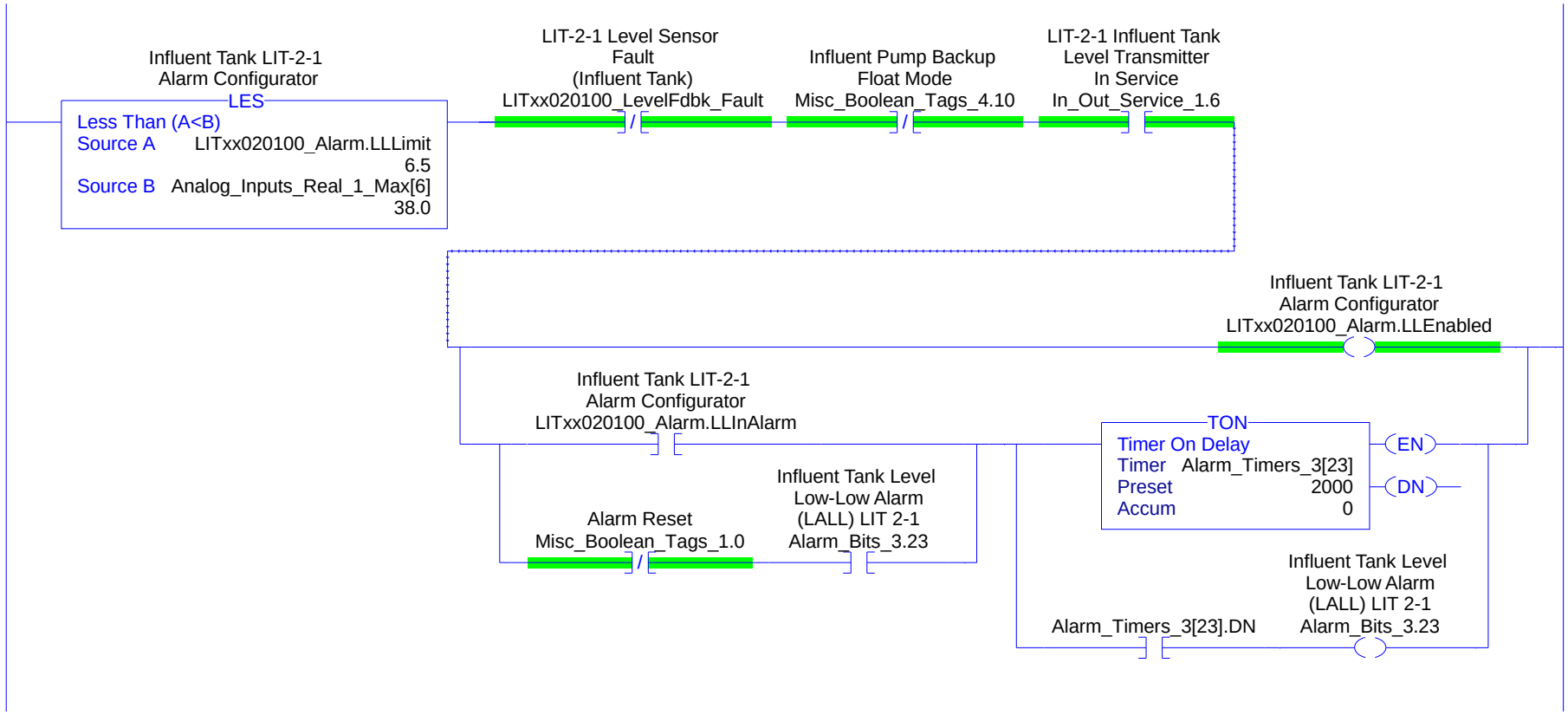
Influent Tank LIT-2-1
Alarm Configurator
LES
Less Than (A<B)
Source A LITxx020100_Alarm.LLLimit
6.5
Source B Analog_Inputs_Real_1_Max[6]
38.0
LIT-2-1 Level Sensor
Fault
(Influent Tank)
LITxx020100_LevelFdbk_Fault
Influent Pump Backup
Float Mode
Misc_Boolean_Tags_4.10
LIT-2-1 Influent Tank
Level Transmitter
In Service
In_Out_Service_1.6
Influent Tank LIT-2-1
Alarm Configurator
LITxx020100_Alarm.LLEnabled
Influent Tank LIT-2-1
Alarm Configurator
LITxx020100_Alarm.LLInAlarm
Alarm Reset
Misc_Boolean_Tags_1.0
Influent Tank Level
Low-Low Alarm
(LALL) LIT 2-1
Alarm_Bits_3.23
TON
Timer On Delay
Timer Alarm_Timers_3[23]
Preset 2000
Accum 0
EN
DN
Alarm_Timers_3[23].DN
Influent Tank Level
Low-Low Alarm
(LALL) LIT 2-1
Alarm_Bits_3.23

73

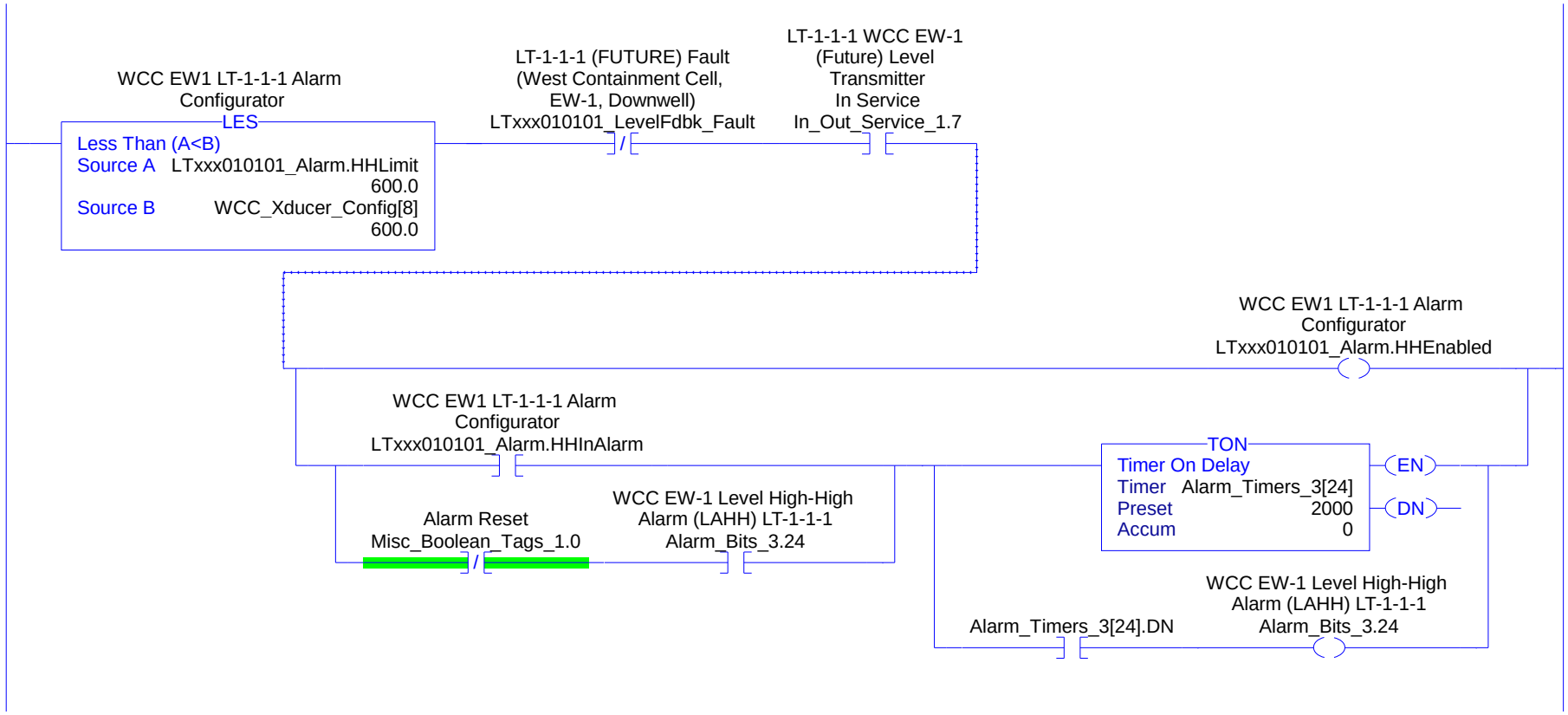
WCC EW1 LT-1-1-1 Alarm Configurator
LES
Less Than (A<B)
Source A LTxxx010101_Alarm.HHLimit 600.0
Source B WCC_Xducer_Config[8] 600.0
LT-1-1-1 (FUTURE) Fault (West Containment Cell, EW-1, Downwell) LTxxx010101_LevelFdbk_Fault
LT-1-1-1 WCC EW-1 (Future) Level Transmitter In Service In_Out_Service_1.7
WCC EW1 LT-1-1-1 Alarm Configurator LTxxx010101_Alarm.HHEnabled
WCC EW1 LT-1-1-1 Alarm Configurator LTxxx010101_Alarm.HHInAlarm
Alarm Reset Misc_Boolean_Tags_1.0
WCC EW-1 Level High-High Alarm (LAHH) LT-1-1-1 Alarm_Bits_3.24
TON
Timer On Delay
Timer Alarm_Timers_3[24]
Preset 2000
Accum 0
EN
DN
Alarm_Timers_3[24].DN
WCC EW-1 Level High-High Alarm (LAHH) LT-1-1-1 Alarm_Bits_3.24

74

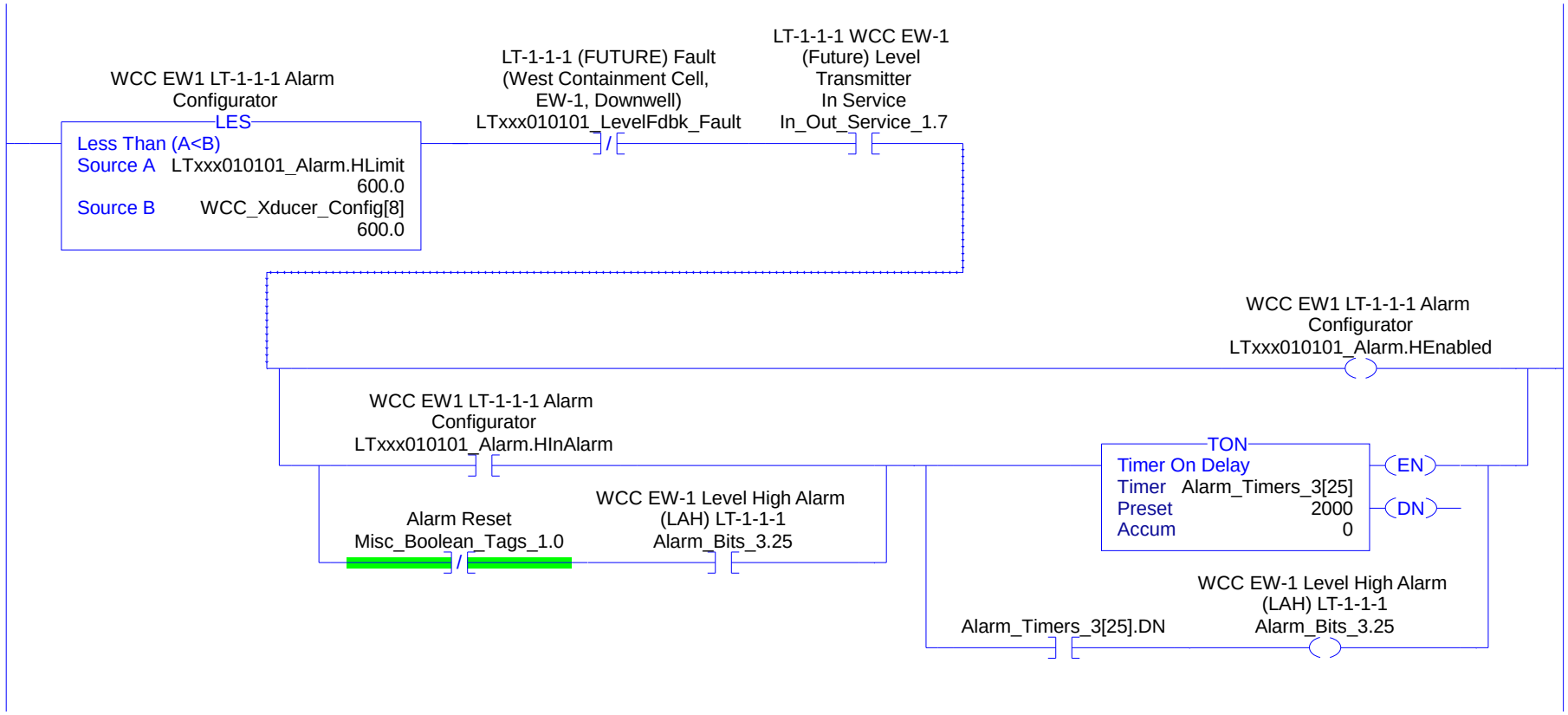
WCC EW1 LT-1-1-1 Alarm Configurator
LES
Less Than (A<B)
Source A LTxxx010101_Alarm.HLimit 600.0
Source B WCC_Xducer_Config[8] 600.0
LT-1-1-1 (FUTURE) Fault (West Containment Cell, EW-1, Downwell) LTxxx010101_LevelFdbk_Fault
LT-1-1-1 WCC EW-1 (Future) Level Transmitter In Service In_Out_Service_1.7
WCC EW1 LT-1-1-1 Alarm Configurator LTxxx010101_Alarm.HEnabled
WCC EW1 LT-1-1-1 Alarm Configurator LTxxx010101_Alarm.HInAlarm
Alarm Reset Misc_Boolean_Tags_1.0
WCC EW-1 Level High Alarm (LAH) LT-1-1-1 Alarm_Bits_3.25
TON
Timer On Delay
Timer Alarm_Timers_3[25]
Preset 2000
Accum 0
EN
DN
Alarm_Timers_3[25].DN
WCC EW-1 Level High Alarm (LAH) LT-1-1-1 Alarm_Bits_3.25

75

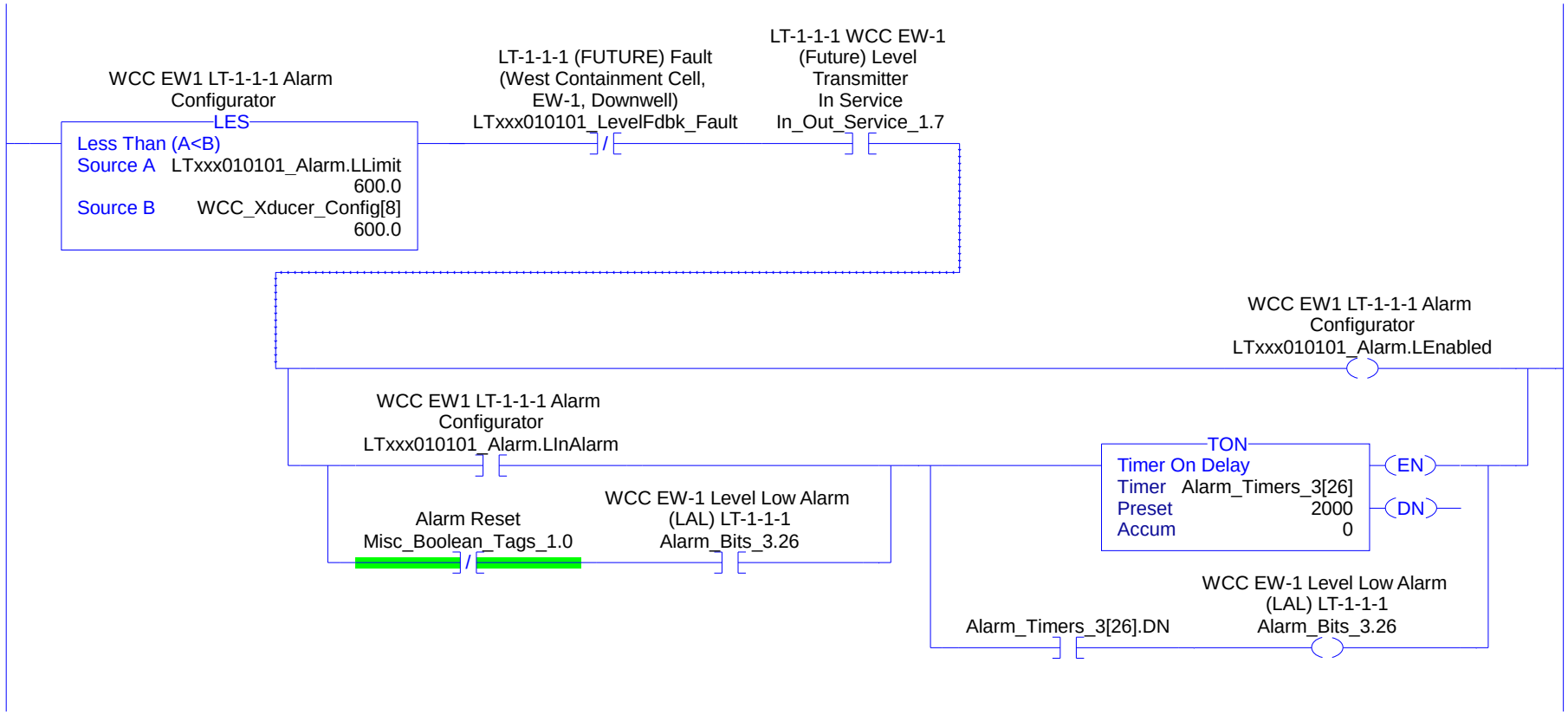
WCC EW1 LT-1-1-1 Alarm Configurator
LES
Less Than (A<B)
Source A LTxxx010101_Alarm.LLimit 600.0
Source B WCC_Xducer_Config[8] 600.0
LT-1-1-1 (FUTURE) Fault (West Containment Cell, EW-1, Downwell) LTxxx010101_LevelFdbk_Fault
LT-1-1-1 WCC EW-1 (Future) Level Transmitter In Service In_Out_Service_1.7
WCC EW1 LT-1-1-1 Alarm Configurator LTxxx010101_Alarm.LEnabled
WCC EW1 LT-1-1-1 Alarm Configurator LTxxx010101_Alarm.LInAlarm
Alarm Reset Misc_Boolean_Tags_1.0
WCC EW-1 Level Low Alarm (LAL) LT-1-1-1 Alarm_Bits_3.26
TON
Timer On Delay
Timer Alarm_Timers_3[26]
Preset 2000
Accum 0
EN
DN
Alarm_Timers_3[26].DN
WCC EW-1 Level Low Alarm (LAL) LT-1-1-1 Alarm_Bits_3.26

76

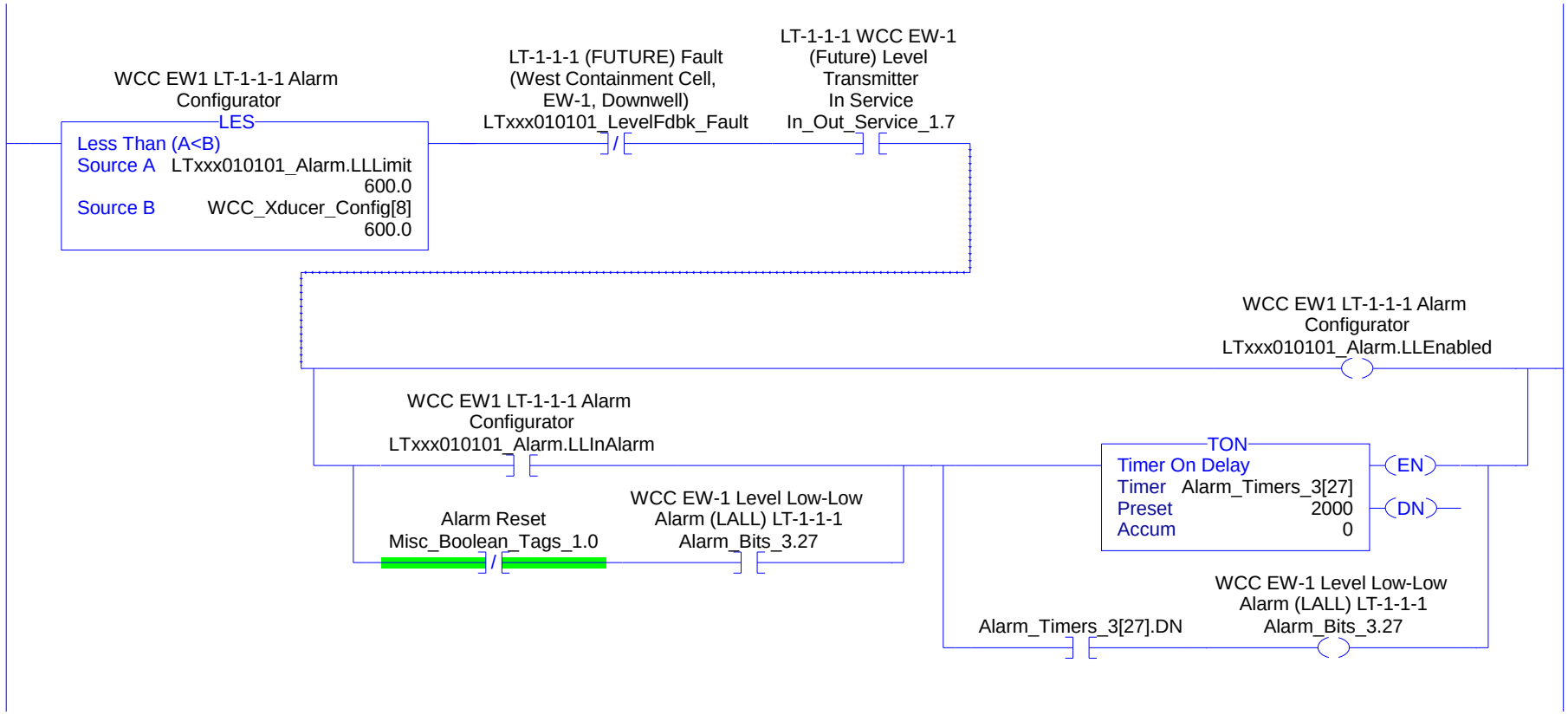
WCC EW1 LT-1-1-1 Alarm Configurator
LES
Less Than (A<B)
Source A LTxxx010101_Alarm.LLLimit 600.0
Source B WCC_Xducer_Config[8] 600.0
LT-1-1-1 (FUTURE) Fault (West Containment Cell, EW-1, Downwell) LTxxx010101_LevelFdbk_Fault
LT-1-1-1 WCC EW-1 (Future) Level Transmitter In Service In_Out_Service_1.7
WCC EW1 LT-1-1-1 Alarm Configurator LTxxx010101_Alarm.LLEnabled
WCC EW1 LT-1-1-1 Alarm Configurator LTxxx010101_Alarm.LLInAlarm
Alarm Reset Misc_Boolean_Tags_1.0
WCC EW-1 Level Low-Low Alarm (LALL) LT-1-1-1 Alarm_Bits_3.27
TON
Timer On Delay
Timer Alarm_Timers_3[27]
Preset 2000
Accum 0
EN
DN
Alarm_Timers_3[27].DN
WCC EW-1 Level Low-Low Alarm (LALL) LT-1-1-1 Alarm_Bits_3.27

77

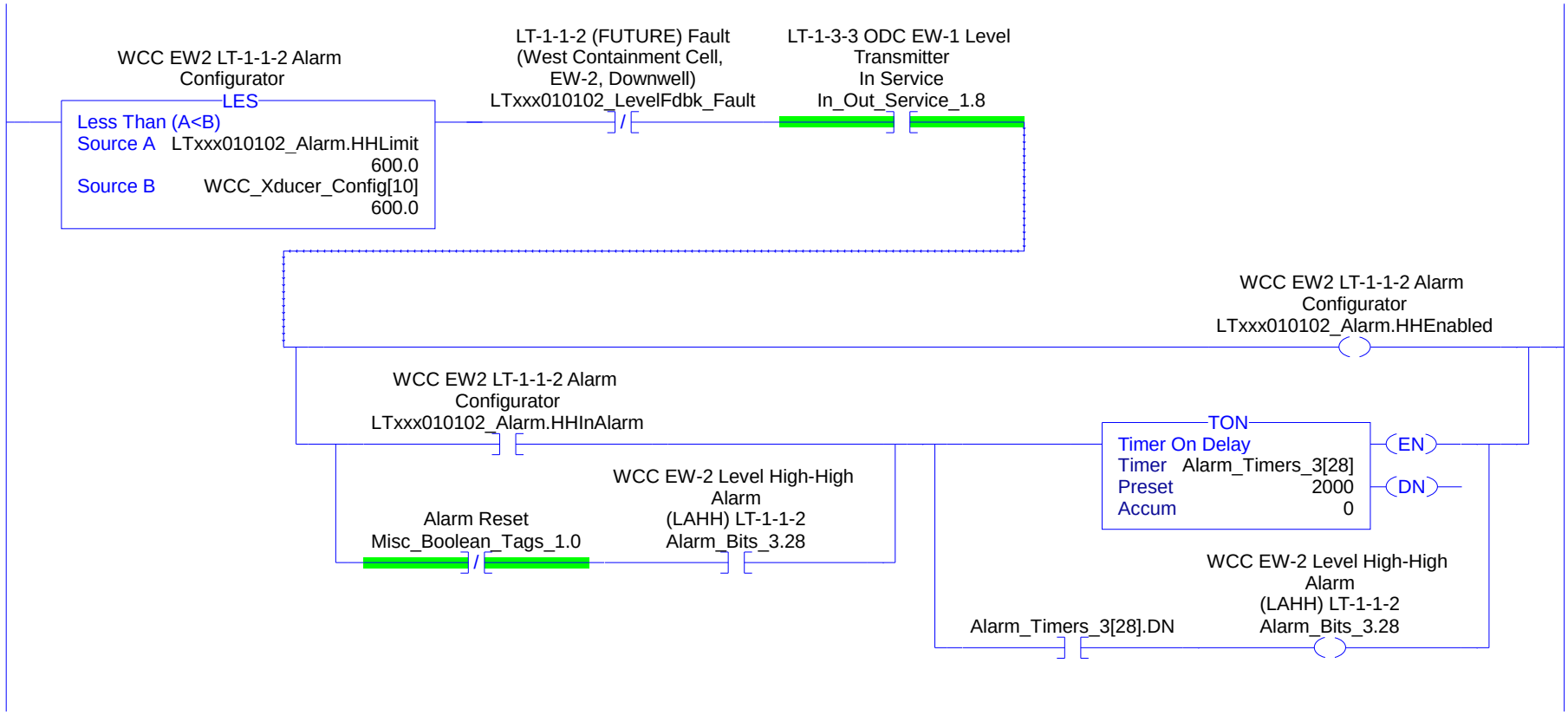
WCC EW2 LT-1-1-2 Alarm Configurator
LES
Less Than (A<B)
Source A LTxxx010102_Alarm.HHLimit
600.0
Source B WCC_Xducer_Config[10]
600.0
LT-1-1-2 (FUTURE) Fault (West Containment Cell, EW-2, Downwell)
LTxxx010102_LevelFdbk_Fault
LT-1-3-3 ODC EW-1 Level Transmitter In Service
In_Out_Service_1.8
WCC EW2 LT-1-1-2 Alarm Configurator
LTxxx010102_Alarm.HHEnabled
WCC EW2 LT-1-1-2 Alarm Configurator
LTxxx010102_Alarm.HHInAlarm
TON
Timer On Delay
Timer Alarm_Timers_3[28]
Preset 2000
Accum 0
EN
DN
Alarm Reset
Misc_Boolean_Tags_1.0
WCC EW-2 Level High-High Alarm
(LAHH) LT-1-1-2
Alarm_Bits_3.28
Alarm_Timers_3[28].DN
WCC EW-2 Level High-High Alarm
(LAHH) LT-1-1-2
Alarm_Bits_3.28

78

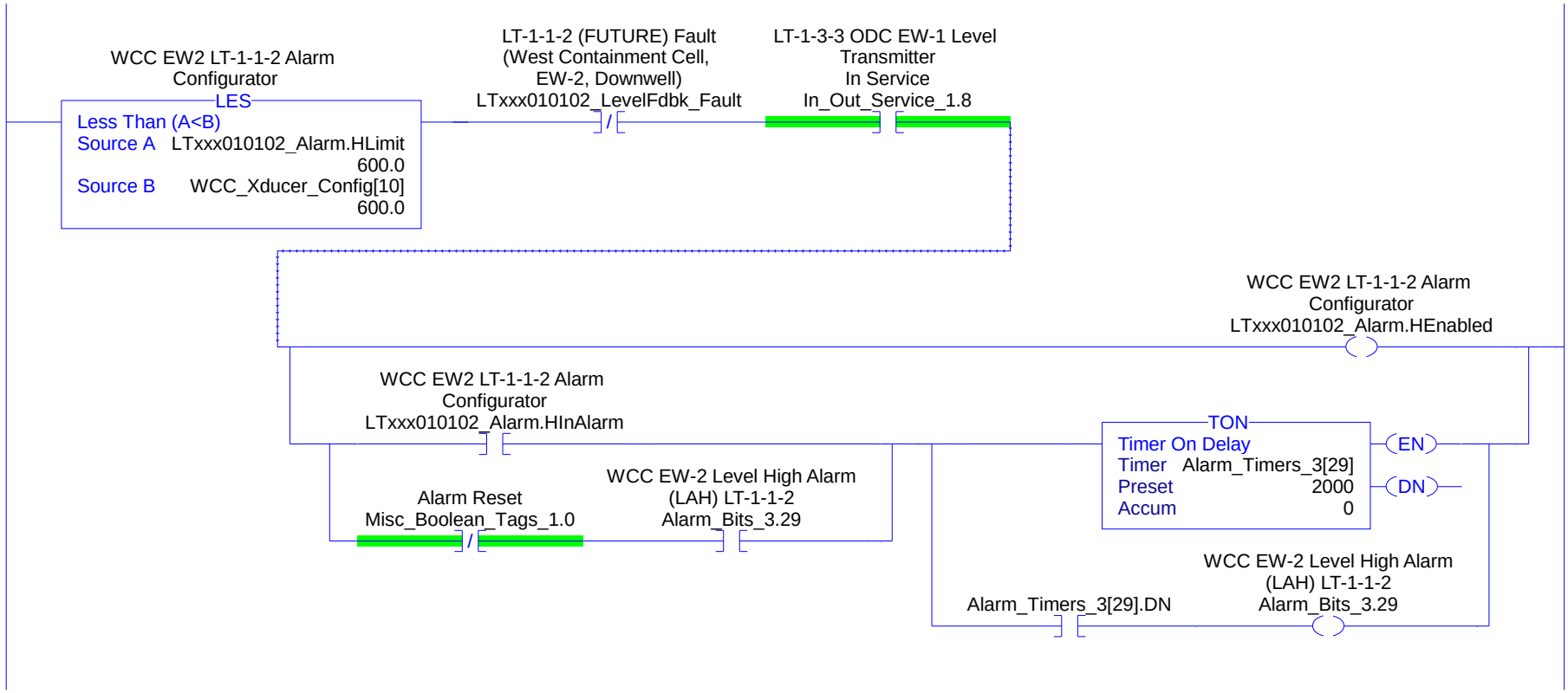
WCC EW2 LT-1-1-2 Alarm Configurator
LES
Less Than (A<B)
Source A LTxxx010102_Alarm.HLimit 600.0
Source B WCC_Xducer_Config[10] 600.0
LT-1-1-2 (FUTURE) Fault (West Containment Cell, EW-2, Downwell) LTxxx010102_LevelFdbk_Fault
LT-1-3-3 ODC EW-1 Level Transmitter In Service In_Out_Service_1.8
WCC EW2 LT-1-1-2 Alarm Configurator LTxxx010102_Alarm.HEnabled
WCC EW2 LT-1-1-2 Alarm Configurator LTxxx010102_Alarm.HInAlarm
Alarm Reset Misc_Boolean_Tags_1.0
WCC EW-2 Level High Alarm (LAH) LT-1-1-2 Alarm_Bits_3.29
TON
Timer On Delay
Timer Alarm_Timers_3[29]
Preset 2000
Accum 0
EN
DN
Alarm_Timers_3[29].DN
WCC EW-2 Level High Alarm (LAH) LT-1-1-2 Alarm_Bits_3.29

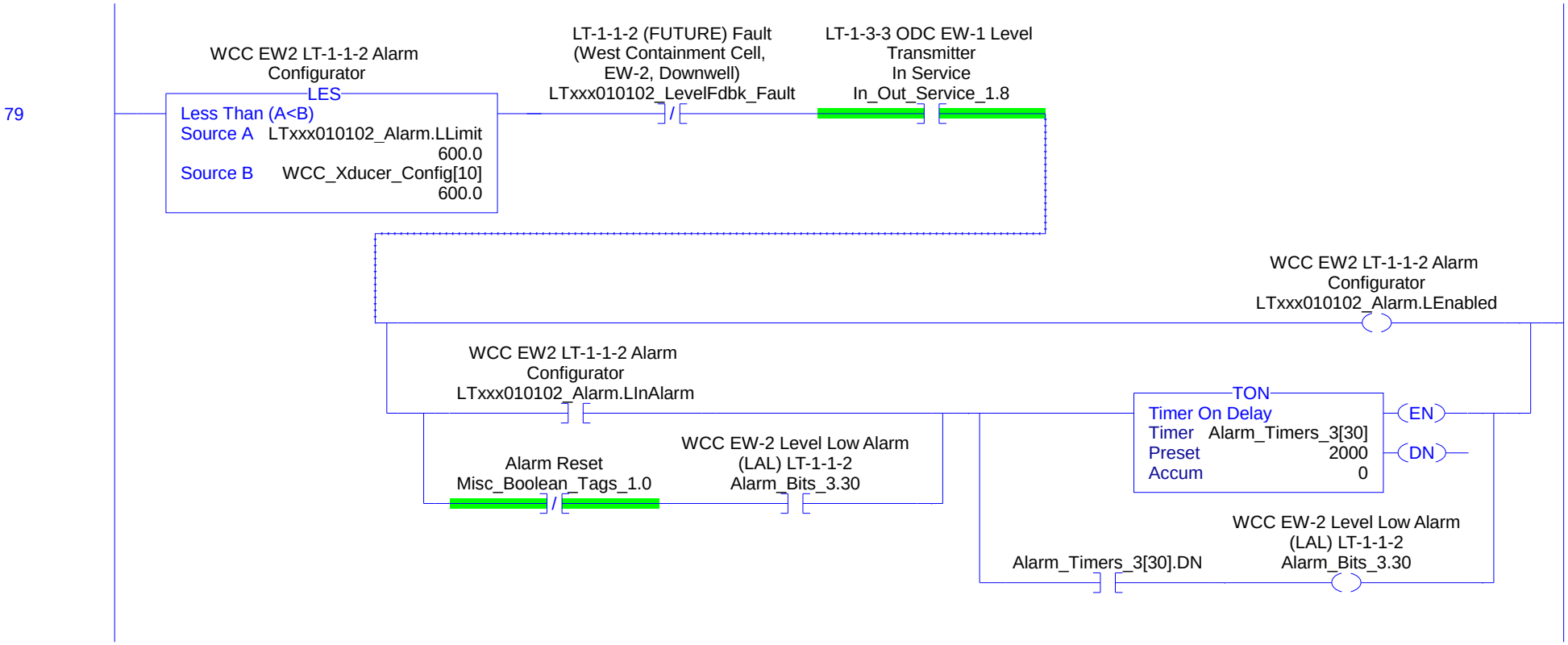
79
WCC EW2 LT-1-1-2 Alarm Configurator
LES
Less Than (A<B)
Source A LTxxx010102_Alarm.LLimit
600.0
Source B WCC_Xducer_Config[10]
600.0
LT-1-1-2 (FUTURE) Fault (West Containment Cell, EW-2, Downwell) LTxxx010102_LevelFdbk_Fault
LT-1-3-3 ODC EW-1 Level Transmitter In Service In_Out_Service_1.8
WCC EW2 LT-1-1-2 Alarm Configurator LTxxx010102_Alarm.LEnabled
WCC EW2 LT-1-1-2 Alarm Configurator LTxxx010102_Alarm.LInAlarm
Alarm Reset Misc_Boolean_Tags_1.0
WCC EW-2 Level Low Alarm (LAL) LT-1-1-2 Alarm_Bits_3.30
TON
Timer On Delay
Timer Alarm_Timers_3[30]
Preset 2000
Accum 0
EN
DN
Alarm_Timers_3[30].DN
WCC EW-2 Level Low Alarm (LAL) LT-1-1-2 Alarm_Bits_3.30

80

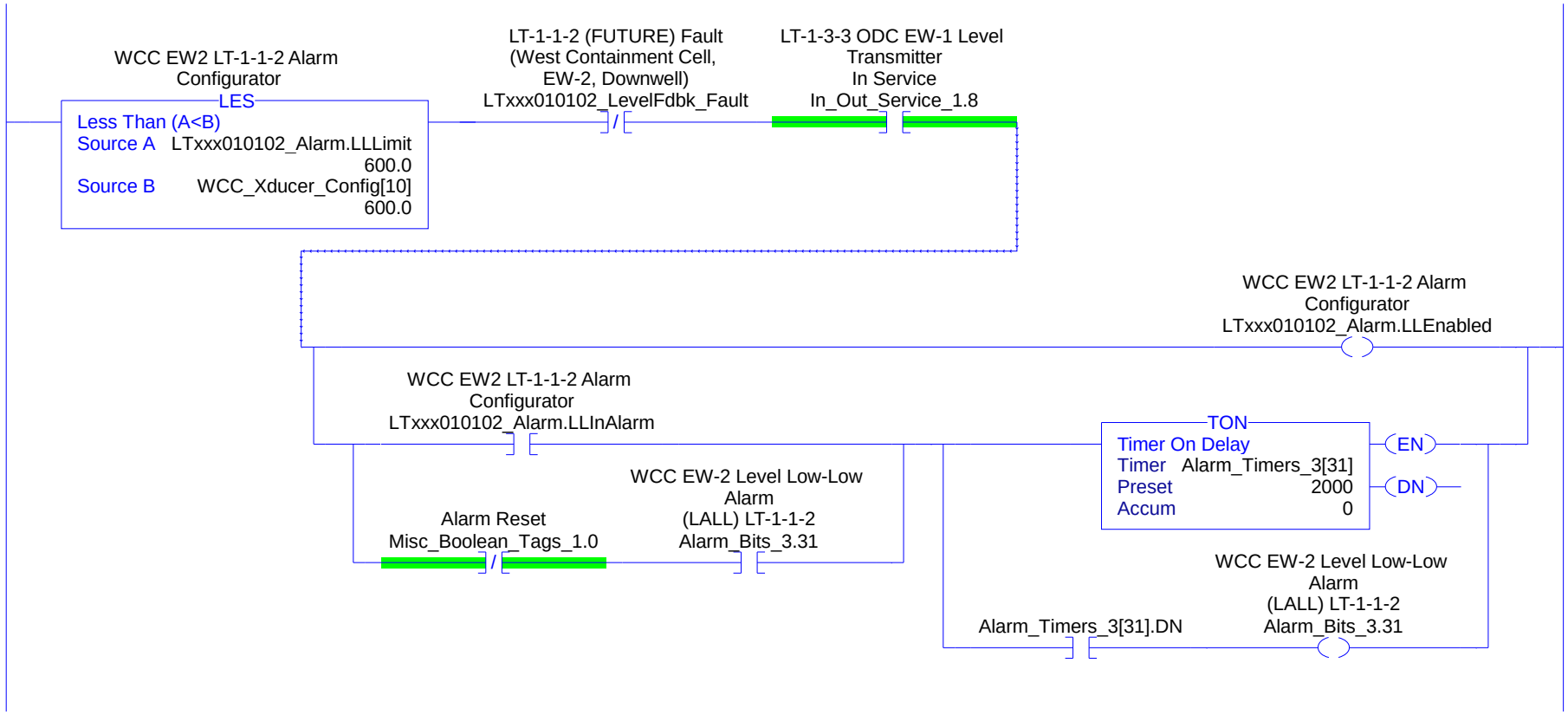
WCC EW2 LT-1-1-2 Alarm Configurator
LES
Less Than (A<B)
Source A LTxxx010102_Alarm.LLLimit 600.0
Source B WCC_Xducer_Config[10] 600.0
LT-1-1-2 (FUTURE) Fault (West Containment Cell, EW-2, Downwell) LTxxx010102_LevelFdbk_Fault
LT-1-3-3 ODC EW-1 Level Transmitter In Service In_Out_Service_1.8
WCC EW2 LT-1-1-2 Alarm Configurator LTxxx010102_Alarm.LLEnabled
WCC EW2 LT-1-1-2 Alarm Configurator LTxxx010102_Alarm.LLInAlarm
TON
Timer On Delay
Timer Alarm_Timers_3[31]
Preset 2000
Accum 0
EN
DN
Alarm Reset Misc_Boolean_Tags_1.0
WCC EW-2 Level Low-Low Alarm (LALL) LT-1-1-2 Alarm_Bits_3.31
Alarm_Timers_3[31].DN
WCC EW-2 Level Low-Low Alarm (LALL) LT-1-1-2 Alarm_Bits_3.31

81

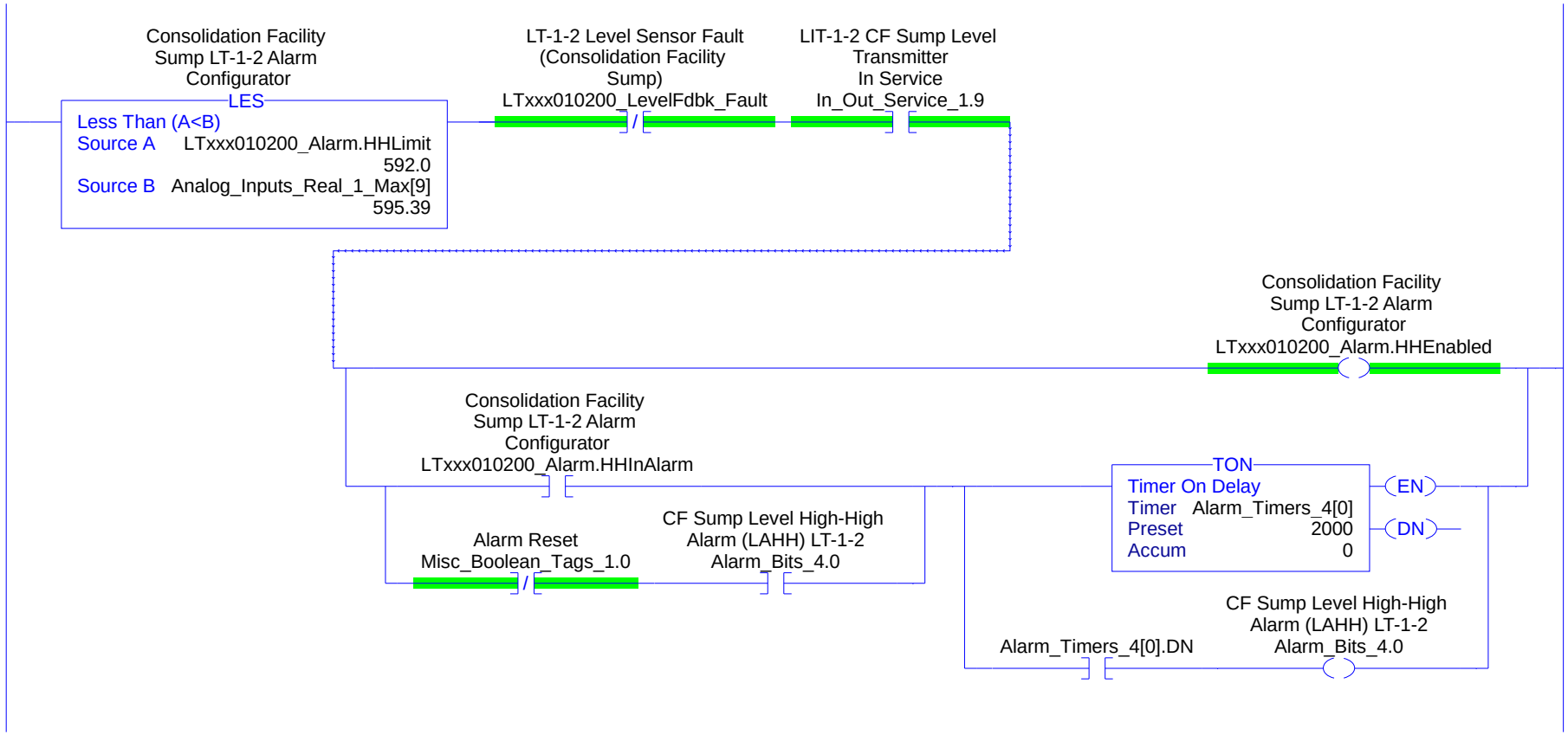
Consolidation Facility Sump LT-1-2 Alarm Configurator
LES
Less Than (A<B)
Source A LTxxx010200_Alarm.HHLimit 592.0
Source B Analog_Inputs_Real_1_Max[9] 595.39
LT-1-2 Level Sensor Fault (Consolidation Facility Sump) LTxxx010200_LevelFdbk_Fault
LIT-1-2 CF Sump Level Transmitter In Service In_Out_Service_1.9
Consolidation Facility Sump LT-1-2 Alarm Configurator LTxxx010200_Alarm.HHEnabled
Consolidation Facility Sump LT-1-2 Alarm Configurator LTxxx010200_Alarm.HHInAlarm
Alarm Reset Misc_Boolean_Tags_1.0
CF Sump Level High-High Alarm (LAHH) LT-1-2 Alarm_Bits_4.0
TON
Timer On Delay
Timer Alarm_Timers_4[0]
Preset 2000
Accum 0
EN
DN
Alarm_Timers_4[0].DN
CF Sump Level High-High Alarm (LAHH) LT-1-2 Alarm_Bits_4.0

82

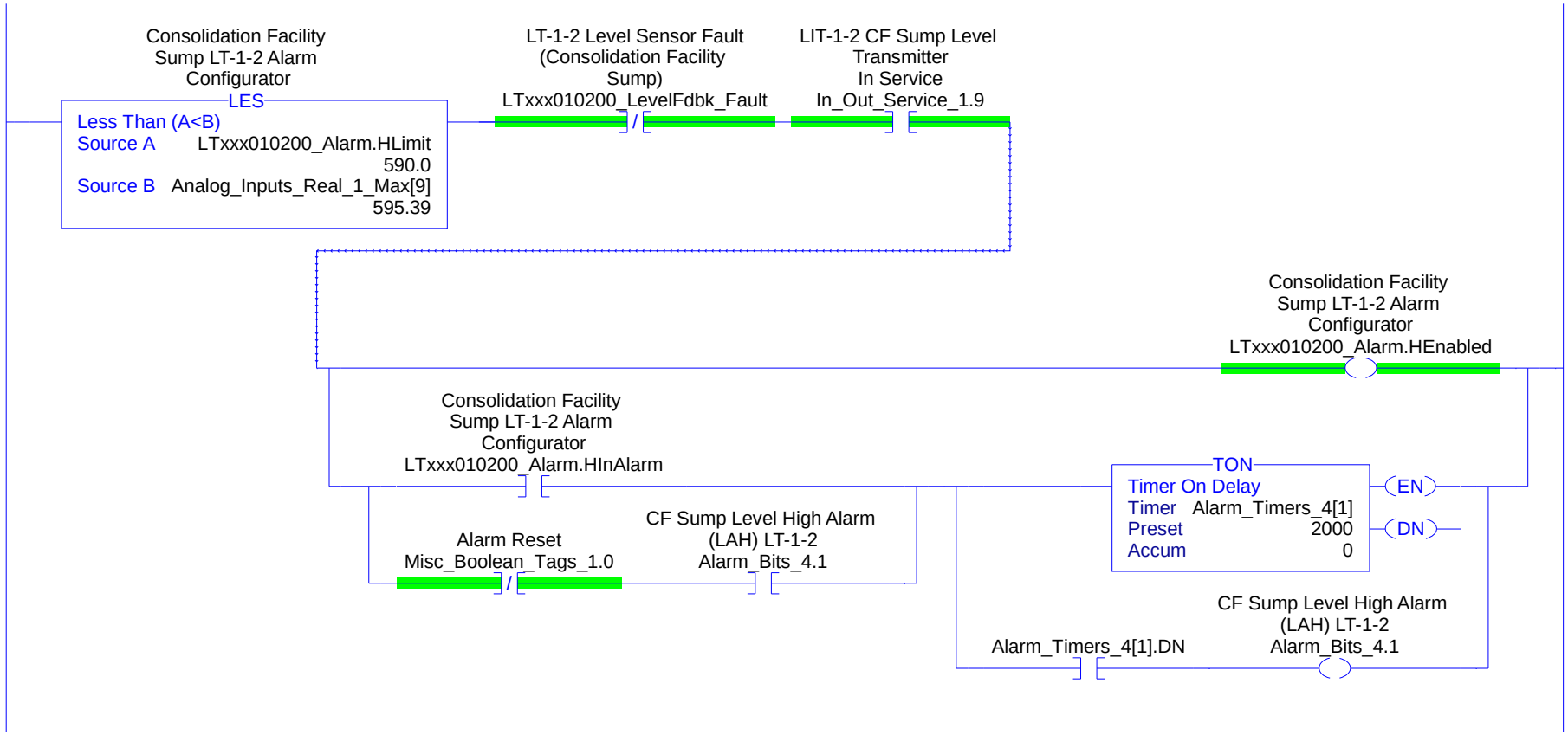
Consolidation Facility Sump LT-1-2 Alarm Configurator
LES
Less Than (A<B)
Source A LTxxx010200_Alarm.HLimit 590.0
Source B Analog_Inputs_Real_1_Max[9] 595.39
LT-1-2 Level Sensor Fault (Consolidation Facility Sump) LTxxx010200_LevelFdbk_Fault
LIT-1-2 CF Sump Level Transmitter In Service In_Out_Service_1.9
Consolidation Facility Sump LT-1-2 Alarm Configurator LTxxx010200_Alarm.HEnabled
Consolidation Facility Sump LT-1-2 Alarm Configurator LTxxx010200_Alarm.HInAlarm
Alarm Reset Misc_Boolean_Tags_1.0
CF Sump Level High Alarm (LAH) LT-1-2 Alarm_Bits_4.1
TON
Timer On Delay
Timer Alarm_Timers_4[1]
Preset 2000
Accum 0
EN
DN
Alarm_Timers_4[1].DN
CF Sump Level High Alarm (LAH) LT-1-2 Alarm_Bits_4.1

83

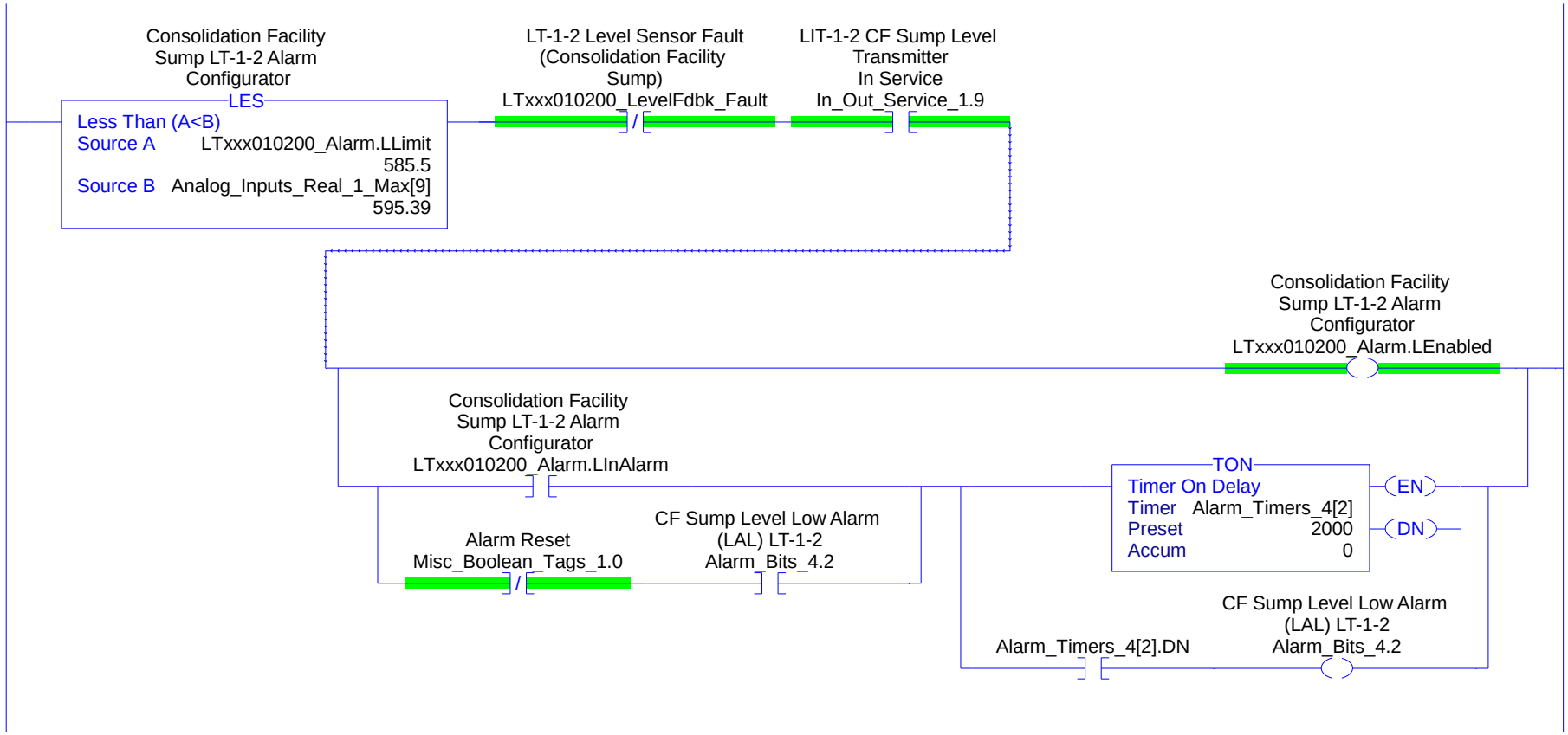
Consolidation Facility Sump LT-1-2 Alarm Configurator
LES
Less Than (A<B)
Source A LTxxx010200_Alarm.LLimit 585.5
Source B Analog_Inputs_Real_1_Max[9] 595.39
LT-1-2 Level Sensor Fault (Consolidation Facility Sump) LTxxx010200_LevelFdbk_Fault
LIT-1-2 CF Sump Level Transmitter In Service In_Out_Service_1.9
Consolidation Facility Sump LT-1-2 Alarm Configurator LTxxx010200_Alarm.LEnabled
Consolidation Facility Sump LT-1-2 Alarm Configurator LTxxx010200_Alarm.LInAlarm
Alarm Reset Misc_Boolean_Tags_1.0
CF Sump Level Low Alarm (LAL) LT-1-2 Alarm_Bits_4.2
TON
Timer On Delay
Timer Alarm_Timers_4[2]
Preset 2000
Accum 0
EN
DN
Alarm_Timers_4[2].DN
CF Sump Level Low Alarm (LAL) LT-1-2 Alarm_Bits_4.2

84

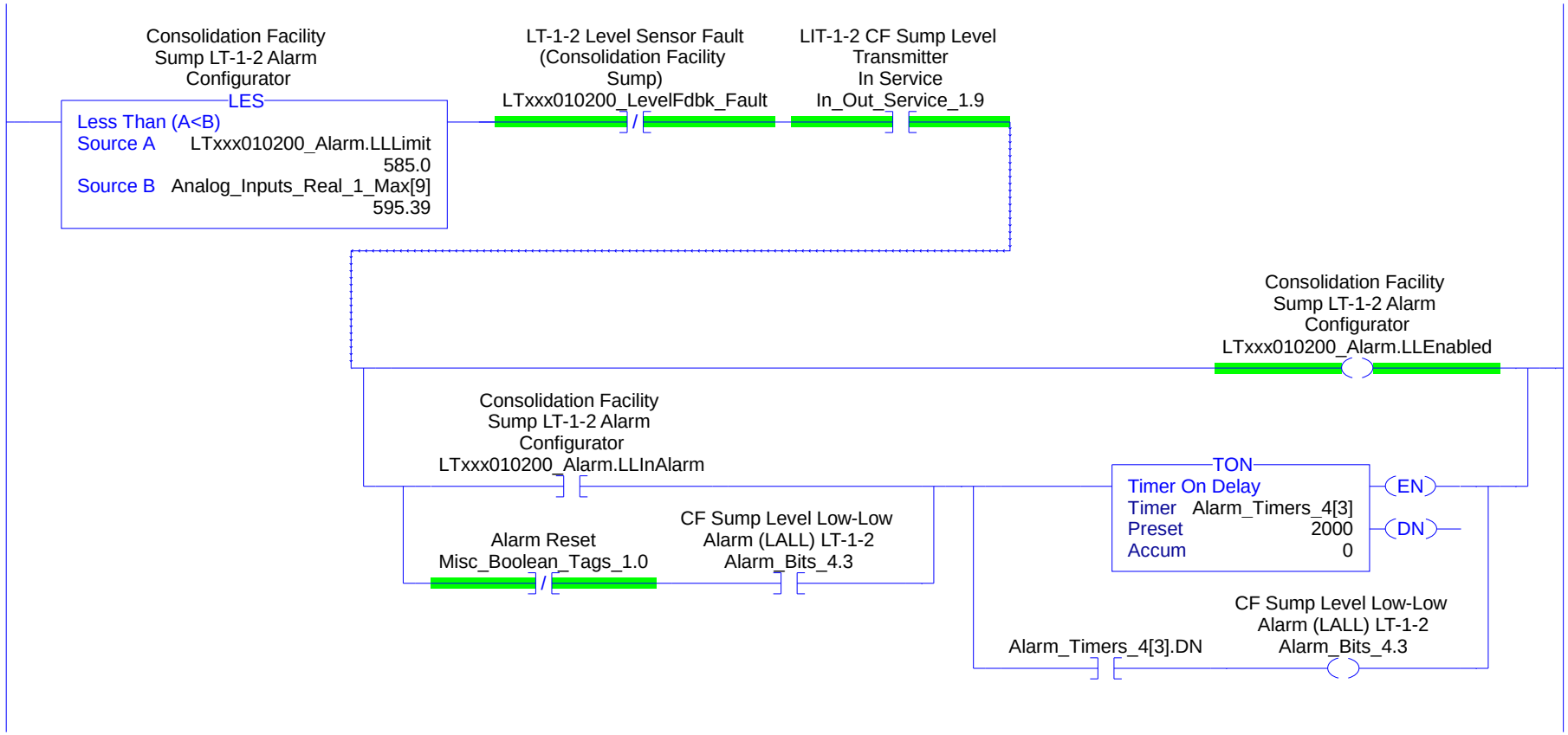
Consolidation Facility Sump LT-1-2 Alarm Configurator
LES
Less Than (A<B)
Source A LTxxx010200_Alarm.LLLimit 585.0
Source B Analog_Inputs_Real_1_Max[9] 595.39
LT-1-2 Level Sensor Fault (Consolidation Facility Sump) LTxxx010200_LevelFdbk_Fault
LIT-1-2 CF Sump Level Transmitter In Service In_Out_Service_1.9
Consolidation Facility Sump LT-1-2 Alarm Configurator LTxxx010200_Alarm.LLEnabled
Consolidation Facility Sump LT-1-2 Alarm Configurator LTxxx010200_Alarm.LLInAlarm
Alarm Reset Misc_Boolean_Tags_1.0
CF Sump Level Low-Low Alarm (LALL) LT-1-2 Alarm_Bits_4.3
TON
Timer On Delay
Timer Alarm_Timers_4[3]
Preset 2000
Accum 0
EN
DN
Alarm_Timers_4[3].DN
CF Sump Level Low-Low Alarm (LALL) LT-1-2 Alarm_Bits_4.3

85

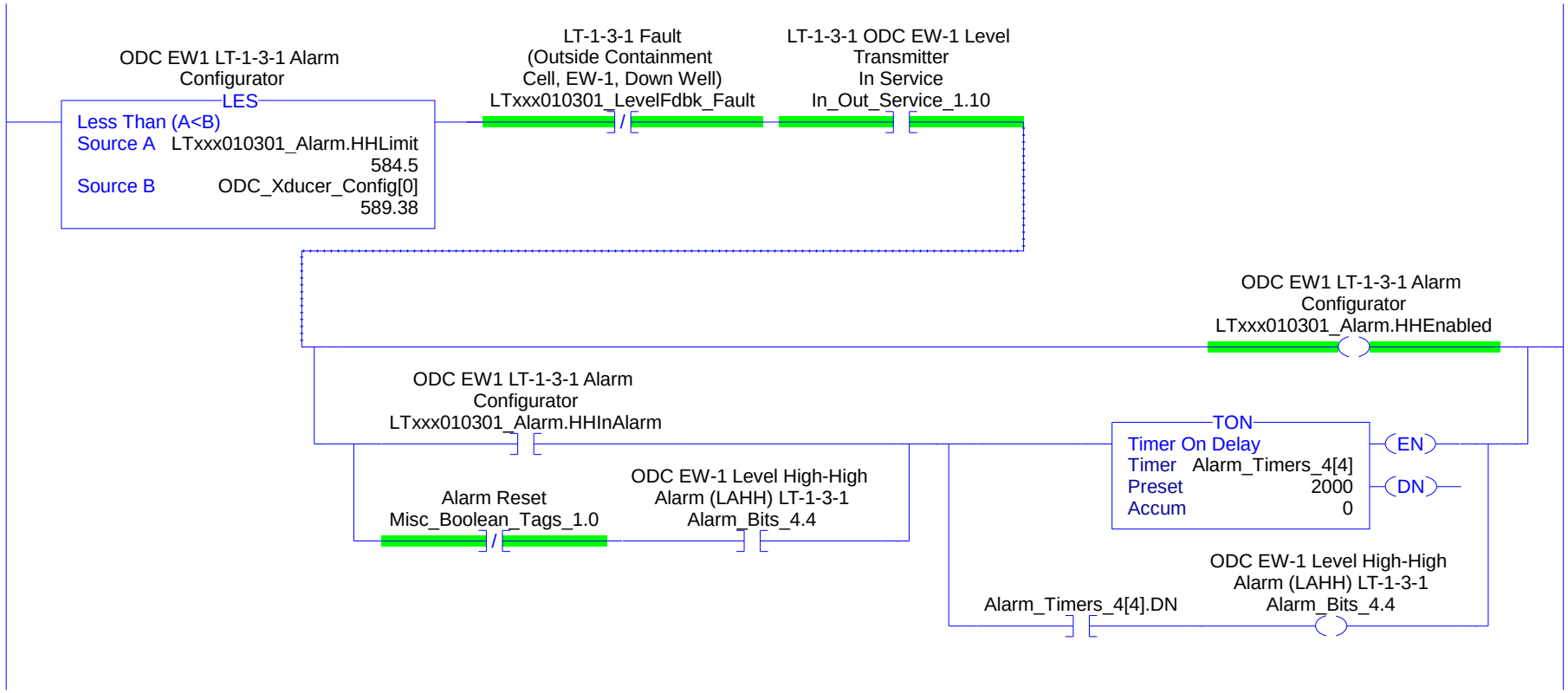
ODC EW1 LT-1-3-1 Alarm Configurator
LES
Less Than (A<B)
Source A LTxxx010301_Alarm.HHLimit
584.5
Source B ODC_Xducer_Config[0]
589.38
LT-1-3-1 Fault (Outside Containment Cell, EW-1, Down Well)
LTxxx010301_LevelFdbk_Fault
LT-1-3-1 ODC EW-1 Level Transmitter In Service
In_Out_Service_1.10
ODC EW1 LT-1-3-1 Alarm Configurator
LTxxx010301_Alarm.HHEnabled
ODC EW1 LT-1-3-1 Alarm Configurator
LTxxx010301_Alarm.HHInAlarm
Alarm Reset
Misc_Boolean_Tags_1.0
ODC EW-1 Level High-High Alarm (LAHH) LT-1-3-1
Alarm_Bits_4.4
TON
Timer On Delay
Timer Alarm_Timers_4[4]
Preset 2000
Accum 0
EN
DN
Alarm_Timers_4[4].DN
ODC EW-1 Level High-High Alarm (LAHH) LT-1-3-1
Alarm_Bits_4.4

86

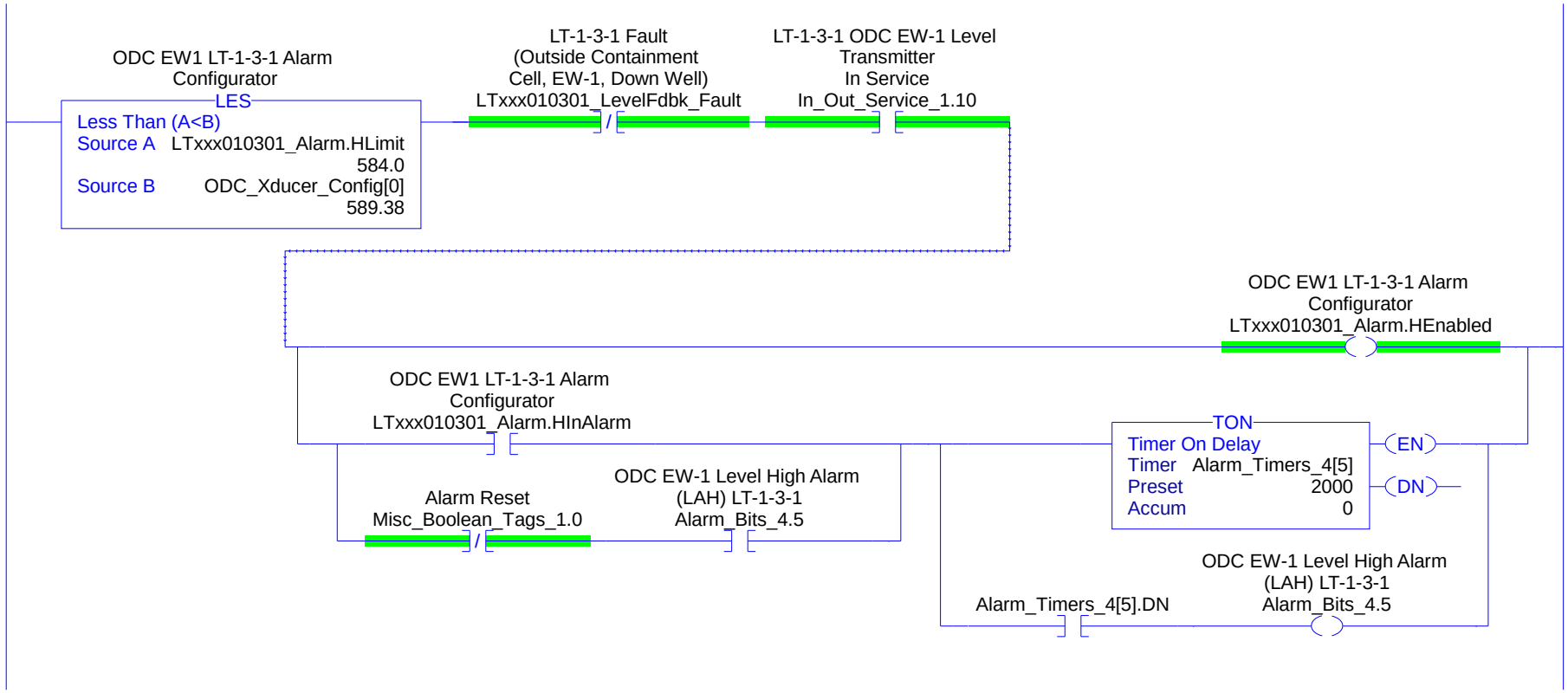
ODC EW1 LT-1-3-1 Alarm Configurator
LES
Less Than (A<B)
Source A LTxxx010301_Alarm.HLimit 584.0
Source B ODC_Xducer_Config[0] 589.38
LT-1-3-1 Fault (Outside Containment Cell, EW-1, Down Well) LTxxx010301_LevelFdbk_Fault
LT-1-3-1 ODC EW-1 Level Transmitter In Service In_Out_Service_1.10
ODC EW1 LT-1-3-1 Alarm Configurator LTxxx010301_Alarm.HEnabled
ODC EW1 LT-1-3-1 Alarm Configurator LTxxx010301_Alarm.HInAlarm
Alarm Reset Misc_Boolean_Tags_1.0
ODC EW-1 Level High Alarm (LAH) LT-1-3-1 Alarm_Bits_4.5
TON
Timer On Delay
Timer Alarm_Timers_4[5]
Preset 2000
Accum 0
EN
DN
Alarm_Timers_4[5].DN
ODC EW-1 Level High Alarm (LAH) LT-1-3-1 Alarm_Bits_4.5

87

LT-1-3-1 Level
(Outside Containment
Cell, EW-1, Down Well)
[1x ft elev.]

GRT
Greater Than (A>B)
Source A ODC_Water_Level[0]
580.16296
Source B Process_Setpoints[11]
576.0

ODC EW1 LT-1-3-1 Alarm
Configurator

LES
Less Than (A<B)
Source A LTxxx010301_Alarm.LLimit
572.0
Source B ODC_Xducer_Config[0]
589.38

LT-1-3-1 Fault
(Outside Containment
Cell, EW-1, Down Well)
LTxxx010301_LevelFdbk_Fault

LT-1-3-1 ODC EW-1 Level
Transmitter
In Service
In_Out_Service_1.10

ODC EW1 LT-1-3-1 Alarm
Configurator
LTxxx010301_Alarm.LInAlarm

Alarm Reset
Misc_Boolean_Tags_1.0

ODC EW-1 Level Low Ala
(LAL) LT-1-3-1
Alarm_Bits_4.6

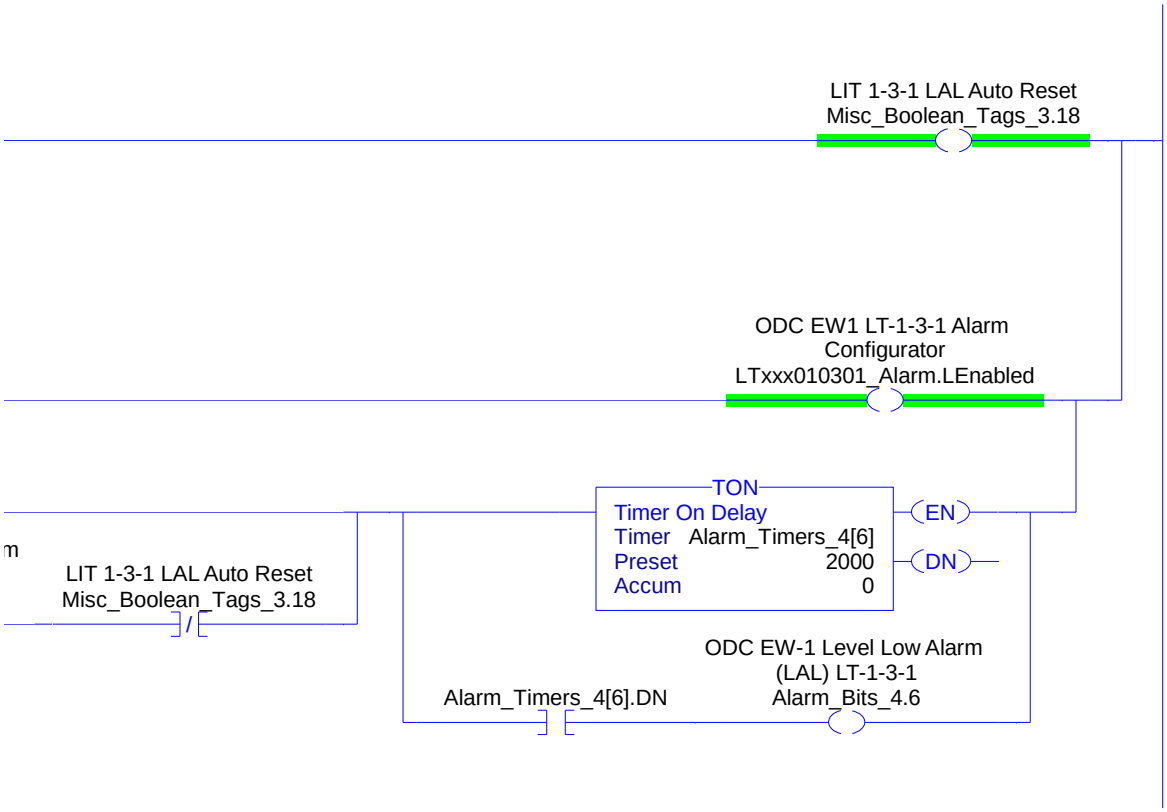
LIT 1-3-1 LAL Auto Reset
Misc_Boolean_Tags_3.18
ODC EW1 LT-1-3-1 Alarm
Configurator
LTxxx010301_Alarm.LEnabled
TON
Timer On Delay
Timer Alarm_Timers_4[6]
Preset 2000
Accum 0
EN
DN
m
LIT 1-3-1 LAL Auto Reset
Misc_Boolean_Tags_3.18
ODC EW-1 Level Low Alarm
(LAL) LT-1-3-1
Alarm_Bits_4.6
Alarm_Timers_4[6].DN

88

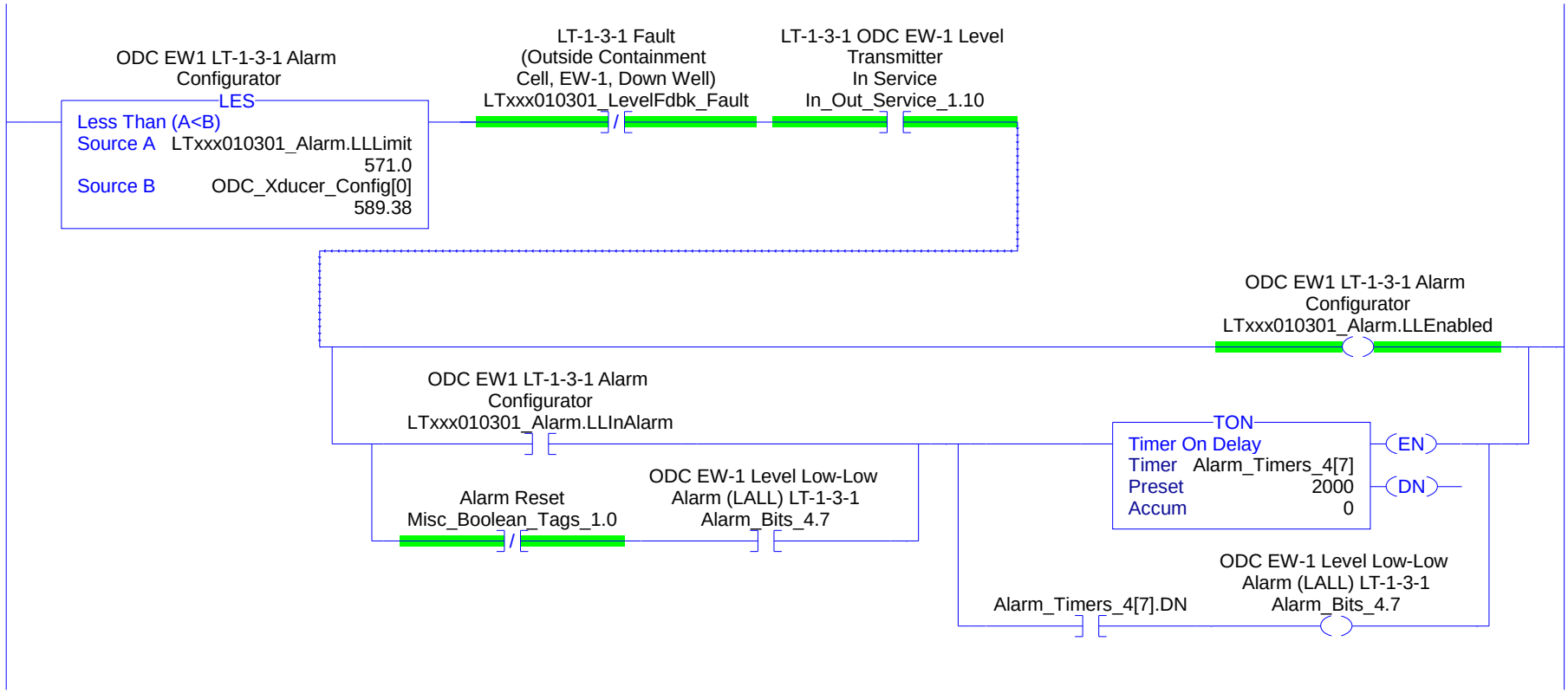
ODC EW1 LT-1-3-1 Alarm Configurator
LES
Less Than (A<B)
Source A LTxxx010301_Alarm.LLLimit 571.0
Source B ODC_Xducer_Config[0] 589.38
LT-1-3-1 Fault (Outside Containment Cell, EW-1, Down Well) LTxxx010301_LevelFdbk_Fault
LT-1-3-1 ODC EW-1 Level Transmitter In Service In_Out_Service_1.10
ODC EW1 LT-1-3-1 Alarm Configurator LTxxx010301_Alarm.LLEnabled
ODC EW1 LT-1-3-1 Alarm Configurator LTxxx010301_Alarm.LLInAlarm
Alarm Reset Misc_Boolean_Tags_1.0
ODC EW-1 Level Low-Low Alarm (LALL) LT-1-3-1 Alarm_Bits_4.7
TON
Timer On Delay
Timer Alarm_Timers_4[7]
Preset 2000
Accum 0
EN
DN
Alarm_Timers_4[7].DN
ODC EW-1 Level Low-Low Alarm (LALL) LT-1-3-1 Alarm_Bits_4.7

89

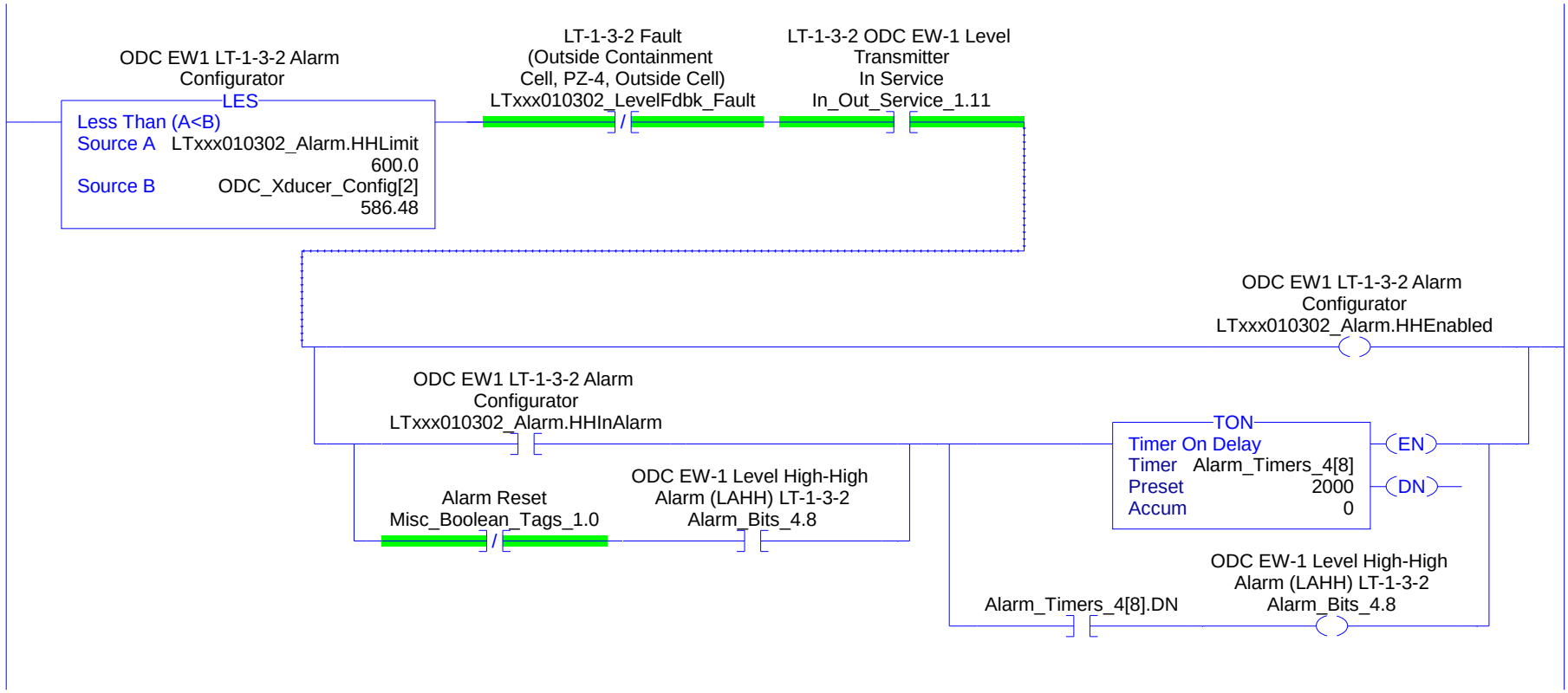
ODC EW1 LT-1-3-2 Alarm Configurator
LES
Less Than (A<B)
Source A LTxxx010302_Alarm.HHLimit
600.0
Source B ODC_Xducer_Config[2]
586.48
LT-1-3-2 Fault (Outside Containment Cell, PZ-4, Outside Cell)
LTxxx010302_LevelFdbk_Fault
LT-1-3-2 ODC EW-1 Level Transmitter In Service
In_Out_Service_1.11
ODC EW1 LT-1-3-2 Alarm Configurator
LTxxx010302_Alarm.HHEnabled
ODC EW1 LT-1-3-2 Alarm Configurator
LTxxx010302_Alarm.HHInAlarm
Alarm Reset
Misc_Boolean_Tags_1.0
ODC EW-1 Level High-High Alarm (LAHH) LT-1-3-2
Alarm_Bits_4.8
TON
Timer On Delay
Timer Alarm_Timers_4[8]
Preset 2000
Accum 0
EN
DN
Alarm_Timers_4[8].DN
ODC EW-1 Level High-High Alarm (LAHH) LT-1-3-2
Alarm_Bits_4.8

90

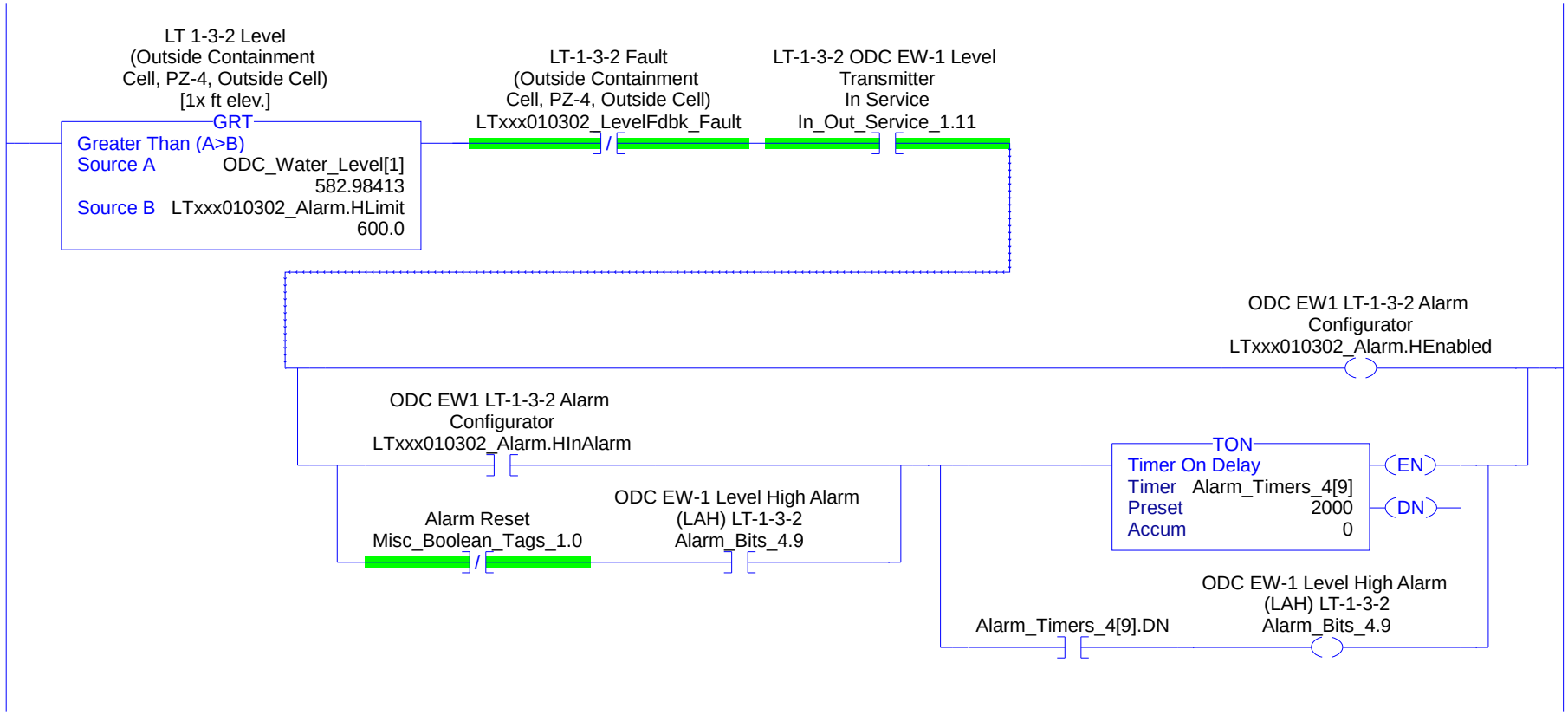
LT 1-3-2 Level
(Outside Containment
Cell, PZ-4, Outside Cell)
[1x ft elev.]
GRT
Greater Than (A>B)
Source A ODC_Water_Level[1]
582.98413
Source B LTxxx010302_Alarm.HLimit
600.0
LT-1-3-2 Fault
(Outside Containment
Cell, PZ-4, Outside Cell)
LTxxx010302_LevelFdbk_Fault
LT-1-3-2 ODC EW-1 Level
Transmitter
In Service
In_Out_Service_1.11
ODC EW1 LT-1-3-2 Alarm
Configurator
LTxxx010302_Alarm.HEnabled
ODC EW1 LT-1-3-2 Alarm
Configurator
LTxxx010302_Alarm.HInAlarm
Alarm Reset
Misc_Boolean_Tags_1.0
ODC EW-1 Level High Alarm
(LAH) LT-1-3-2
Alarm_Bits_4.9
TON
Timer On Delay
Timer Alarm_Timers_4[9]
Preset 2000
Accum 0
EN
DN
Alarm_Timers_4[9].DN
ODC EW-1 Level High Alarm
(LAH) LT-1-3-2
Alarm_Bits_4.9

91

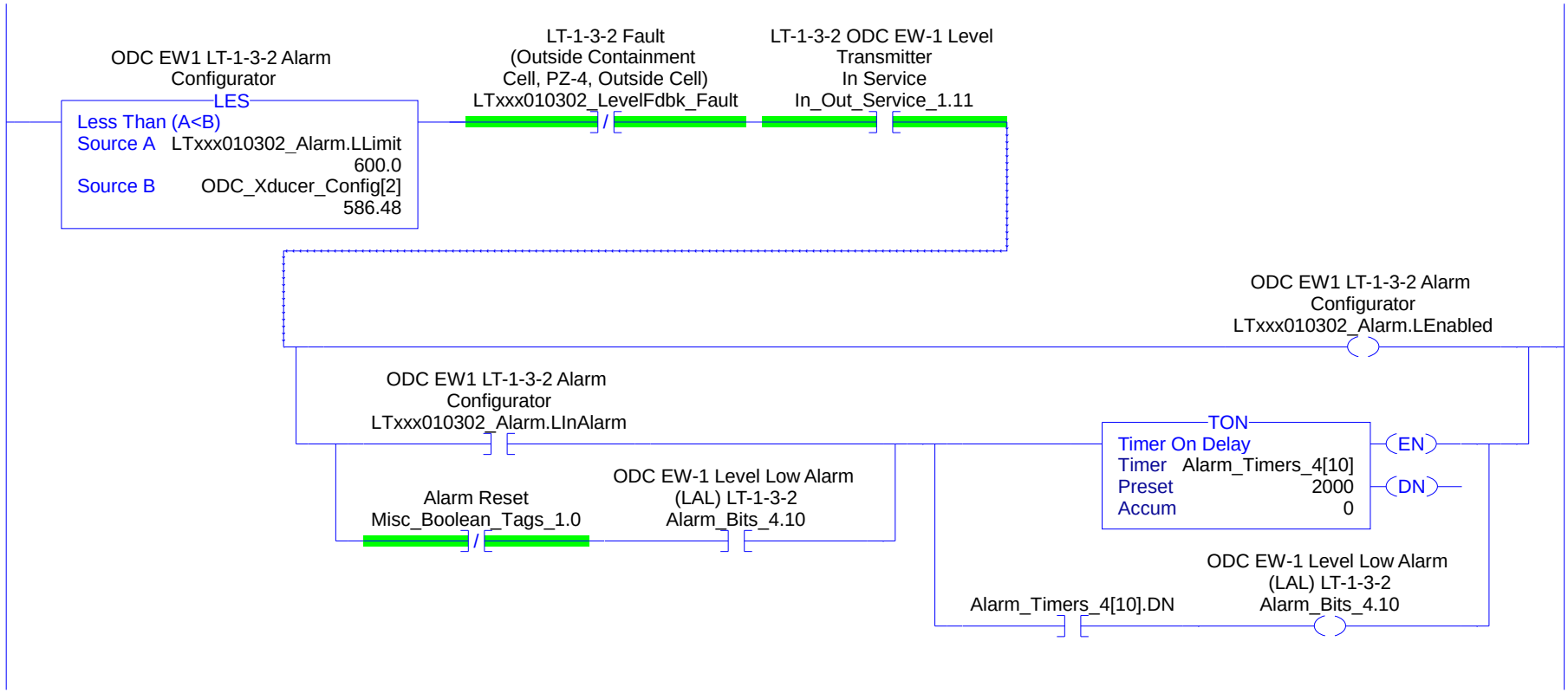
ODC EW1 LT-1-3-2 Alarm Configurator
LES
Less Than (A<B)
Source A LTxxx010302_Alarm.LLimit 600.0
Source B ODC_Xducer_Config[2] 586.48
LT-1-3-2 Fault (Outside Containment Cell, PZ-4, Outside Cell) LTxxx010302_LevelFdbk_Fault
LT-1-3-2 ODC EW-1 Level Transmitter In Service In_Out_Service_1.11
ODC EW1 LT-1-3-2 Alarm Configurator LTxxx010302_Alarm.LEnabled
ODC EW1 LT-1-3-2 Alarm Configurator LTxxx010302_Alarm.LInAlarm
Alarm Reset Misc_Boolean_Tags_1.0
ODC EW-1 Level Low Alarm (LAL) LT-1-3-2 Alarm_Bits_4.10
TON
Timer On Delay
Timer Alarm_Timers_4[10]
Preset 2000
Accum 0
EN
DN
Alarm_Timers_4[10].DN
ODC EW-1 Level Low Alarm (LAL) LT-1-3-2 Alarm_Bits_4.10

92

ODC EW1 LT-1-3-2 Alarm Configurator
LES
Less Than (A<B)
Source A LTxxx010302_Alarm.LLLimit 600.0
Source B ODC_Xducer_Config[2] 586.48

LT-1-3-2 Fault (Outside Containment Cell, PZ-4, Outside Cell)
LTxxx010302_LevelFdbk_Fault

LT-1-3-2 ODC EW-1 Level Transmitter In Service
In_Out_Service_1.11

ODC EW1 LT-1-3-2 Alarm Configurator
LTxxx010302_Alarm.LLEnabled

ODC EW1 LT-1-3-2 Alarm Configurator
LTxxx010302_Alarm.LLInAlarm

Alarm Reset
Misc_Boolean_Tags_1.0

ODC EW-1 Level Low-Low Alarm (LALL) LT-1-3-2
Alarm_Bits_4.11

TON
Timer On Delay
Timer Alarm_Timers_4[11]
Preset 2000
Accum 0
EN
DN

Alarm_Timers_4[11].DN

ODC EW-1 Level Low-Low Alarm (LALL) LT-1-3-2
Alarm_Bits_4.11

93

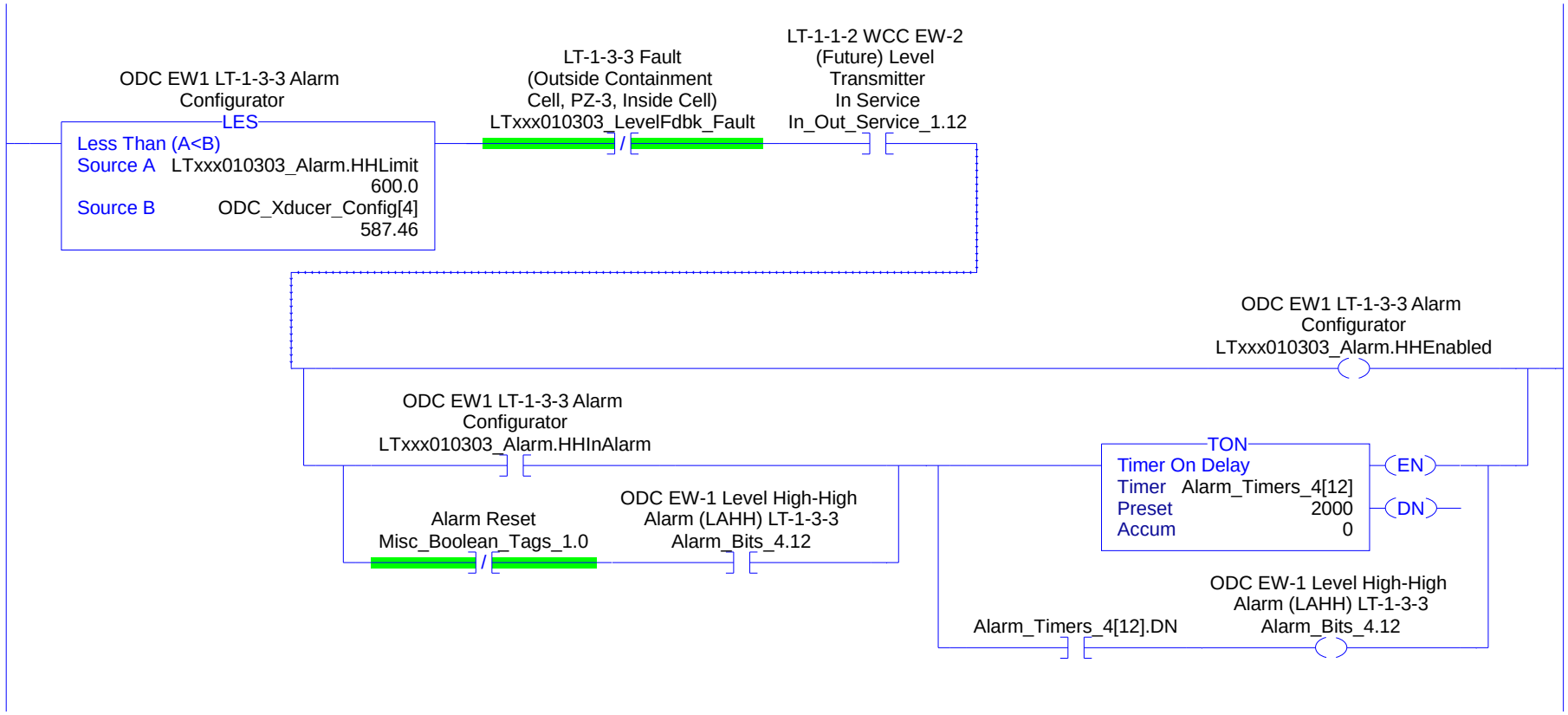
ODC EW1 LT-1-3-3 Alarm Configurator
LES
Less Than (A<B)
Source A LTxxx010303_Alarm.HHLimit
600.0
Source B ODC_Xducer_Config[4]
587.46
LT-1-3-3 Fault (Outside Containment Cell, PZ-3, Inside Cell)
LTxxx010303_LevelFdbk_Fault
LT-1-1-2 WCC EW-2 (Future) Level Transmitter In Service
In_Out_Service_1.12
ODC EW1 LT-1-3-3 Alarm Configurator
LTxxx010303_Alarm.HHEnabled
ODC EW1 LT-1-3-3 Alarm Configurator
LTxxx010303_Alarm.HHInAlarm
Alarm Reset
Misc_Boolean_Tags_1.0
ODC EW-1 Level High-High Alarm (LAHH) LT-1-3-3
Alarm_Bits_4.12
TON
Timer On Delay
Timer Alarm_Timers_4[12]
Preset 2000
Accum 0
EN
DN
Alarm_Timers_4[12].DN
ODC EW-1 Level High-High Alarm (LAHH) LT-1-3-3
Alarm_Bits_4.12

94

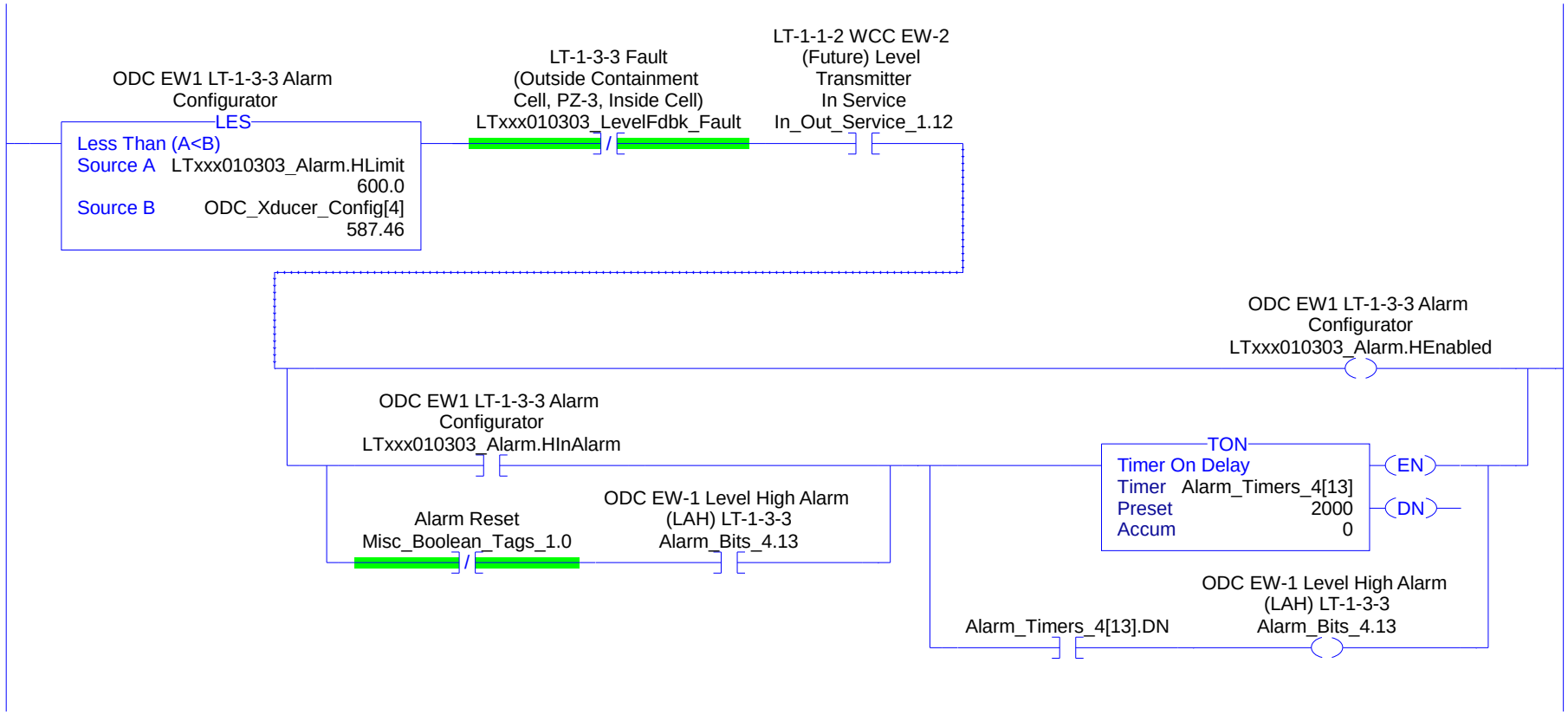
ODC EW1 LT-1-3-3 Alarm Configurator
LES
Less Than (A<B)
Source A LTxxx010303_Alarm.HLimit
600.0
Source B ODC_Xducer_Config[4]
587.46
LT-1-3-3 Fault (Outside Containment Cell, PZ-3, Inside Cell)
LTxxx010303_LevelFdbk_Fault
LT-1-1-2 WCC EW-2 (Future) Level Transmitter In Service
In_Out_Service_1.12
ODC EW1 LT-1-3-3 Alarm Configurator
LTxxx010303_Alarm.HEnabled
ODC EW1 LT-1-3-3 Alarm Configurator
LTxxx010303_Alarm.HInAlarm
Alarm Reset
Misc_Boolean_Tags_1.0
ODC EW-1 Level High Alarm (LAH) LT-1-3-3
Alarm_Bits_4.13
TON
Timer On Delay
Timer Alarm_Timers_4[13]
Preset 2000
Accum 0
EN
DN
Alarm_Timers_4[13].DN
ODC EW-1 Level High Alarm (LAH) LT-1-3-3
Alarm_Bits_4.13

95

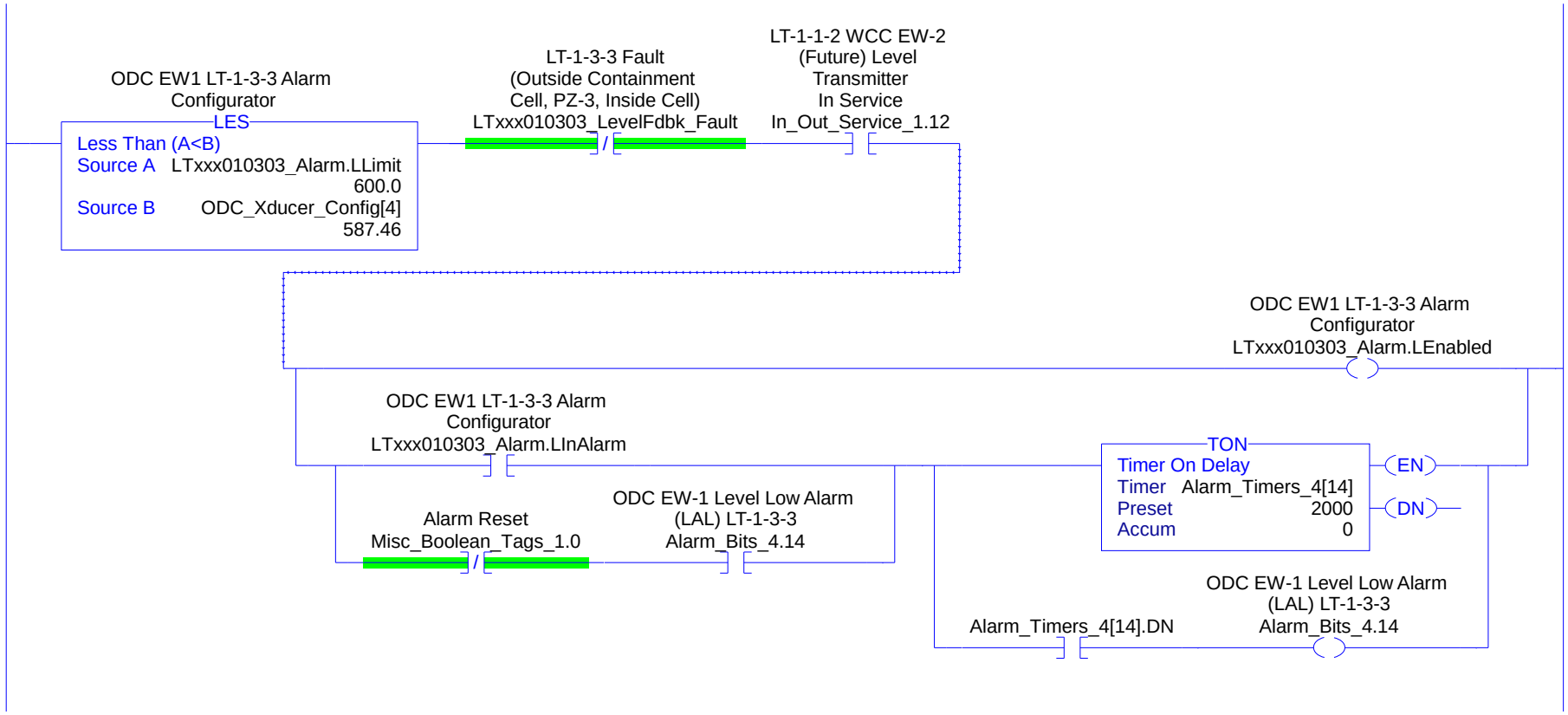
ODC EW1 LT-1-3-3 Alarm Configurator
LES
Less Than (A<B)
Source A LTxxx010303_Alarm.LLimit 600.0
Source B ODC_Xducer_Config[4] 587.46
LT-1-3-3 Fault (Outside Containment Cell, PZ-3, Inside Cell)
LTxxx010303_LevelFdbk_Fault
LT-1-1-2 WCC EW-2 (Future) Level Transmitter In Service
In_Out_Service_1.12
ODC EW1 LT-1-3-3 Alarm Configurator
LTxxx010303_Alarm.LEnabled
ODC EW1 LT-1-3-3 Alarm Configurator
LTxxx010303_Alarm.LInAlarm
Alarm Reset
Misc_Boolean_Tags_1.0
ODC EW-1 Level Low Alarm (LAL) LT-1-3-3
Alarm_Bits_4.14
TON
Timer On Delay
Timer Alarm_Timers_4[14]
Preset 2000
Accum 0
EN
DN
Alarm_Timers_4[14].DN
ODC EW-1 Level Low Alarm (LAL) LT-1-3-3
Alarm_Bits_4.14

96

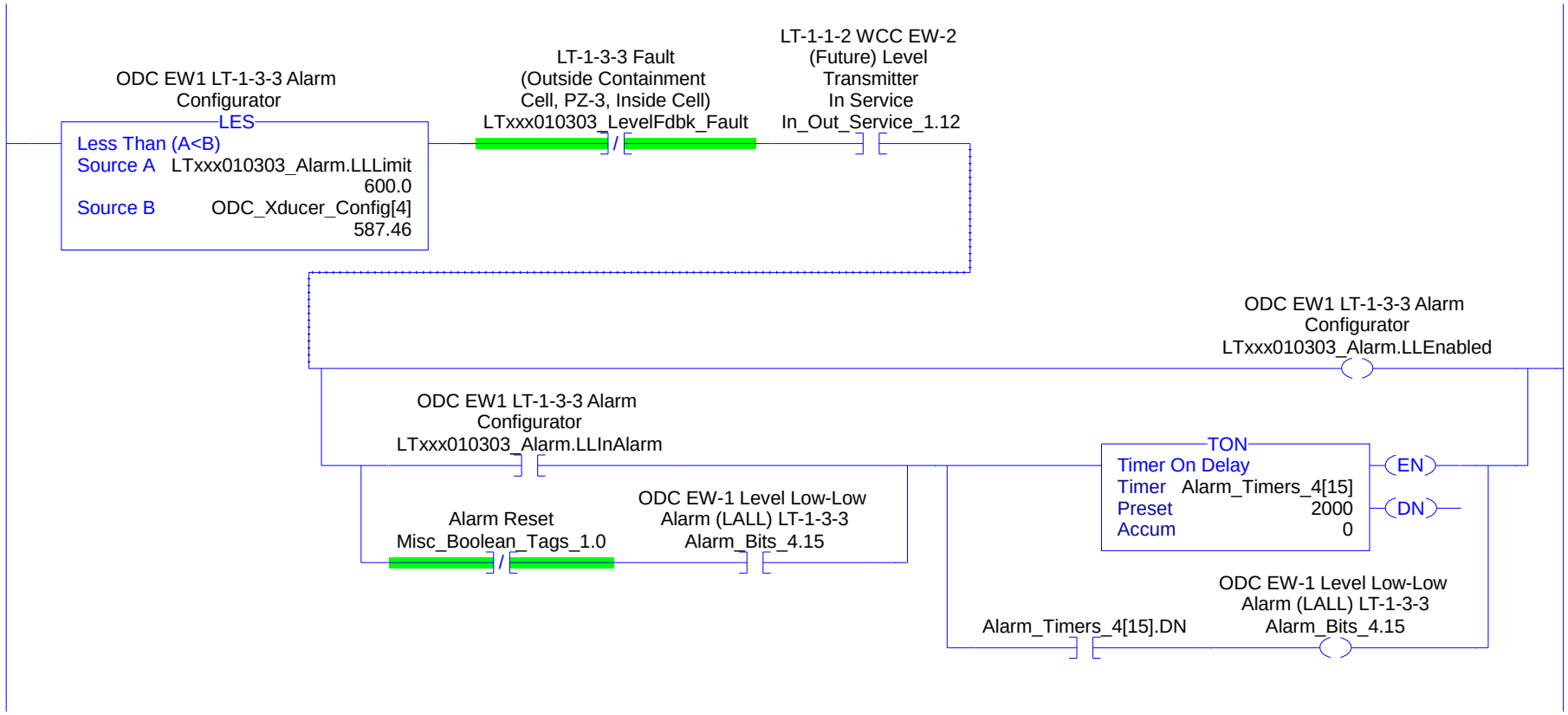
ODC EW1 LT-1-3-3 Alarm Configurator
LES
Less Than (A<B)
Source A LTxxx010303_Alarm.LLLimit
600.0
Source B ODC_Xducer_Config[4]
587.46
LT-1-3-3 Fault (Outside Containment Cell, PZ-3, Inside Cell)
LTxxx010303_LevelFdbk_Fault
LT-1-1-2 WCC EW-2 (Future) Level Transmitter In Service
In_Out_Service_1.12
ODC EW1 LT-1-3-3 Alarm Configurator
LTxxx010303_Alarm.LLEnabled
ODC EW1 LT-1-3-3 Alarm Configurator
LTxxx010303_Alarm.LLInAlarm
Alarm Reset
Misc_Boolean_Tags_1.0
ODC EW-1 Level Low-Low Alarm (LALL) LT-1-3-3
Alarm_Bits_4.15
TON
Timer On Delay
Timer Alarm_Timers_4[15]
Preset 2000
Accum 0
EN
DN
Alarm_Timers_4[15].DN
ODC EW-1 Level Low-Low Alarm (LALL) LT-1-3-3
Alarm_Bits_4.15

97

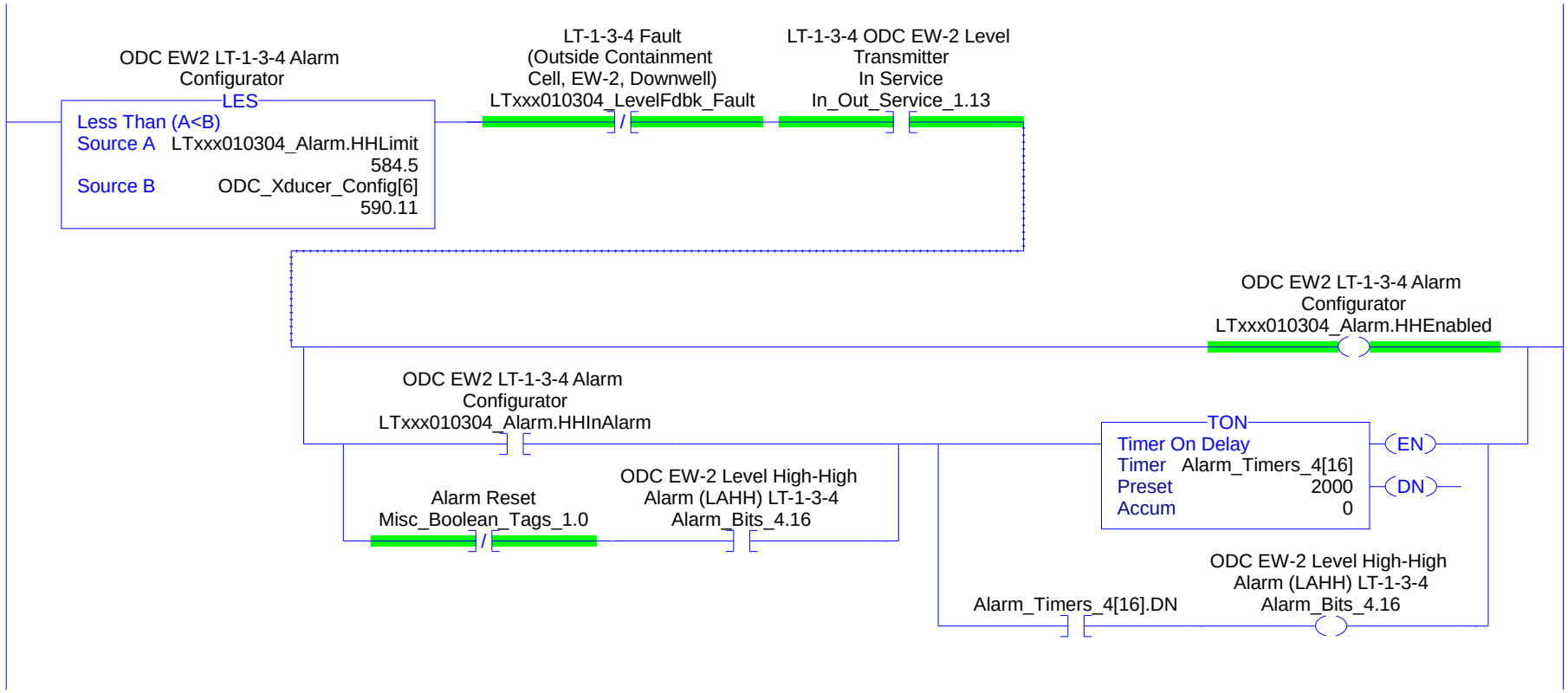
ODC EW2 LT-1-3-4 Alarm Configurator
LES
Less Than (A<B)
Source A LTxxx010304_Alarm.HHLimit
584.5
Source B ODC_Xducer_Config[6]
590.11
LT-1-3-4 Fault (Outside Containment Cell, EW-2, Downwell) LTxxx010304_LevelFdbk_Fault
LT-1-3-4 ODC EW-2 Level Transmitter In Service In_Out_Service_1.13
ODC EW2 LT-1-3-4 Alarm Configurator LTxxx010304_Alarm.HHEnabled
ODC EW2 LT-1-3-4 Alarm Configurator LTxxx010304_Alarm.HHInAlarm
TON
Timer On Delay
Timer Alarm_Timers_4[16]
Preset 2000
Accum 0
EN
DN
Alarm Reset Misc_Boolean_Tags_1.0
ODC EW-2 Level High-High Alarm (LAHH) LT-1-3-4 Alarm_Bits_4.16
Alarm_Timers_4[16].DN
ODC EW-2 Level High-High Alarm (LAHH) LT-1-3-4 Alarm_Bits_4.16

98

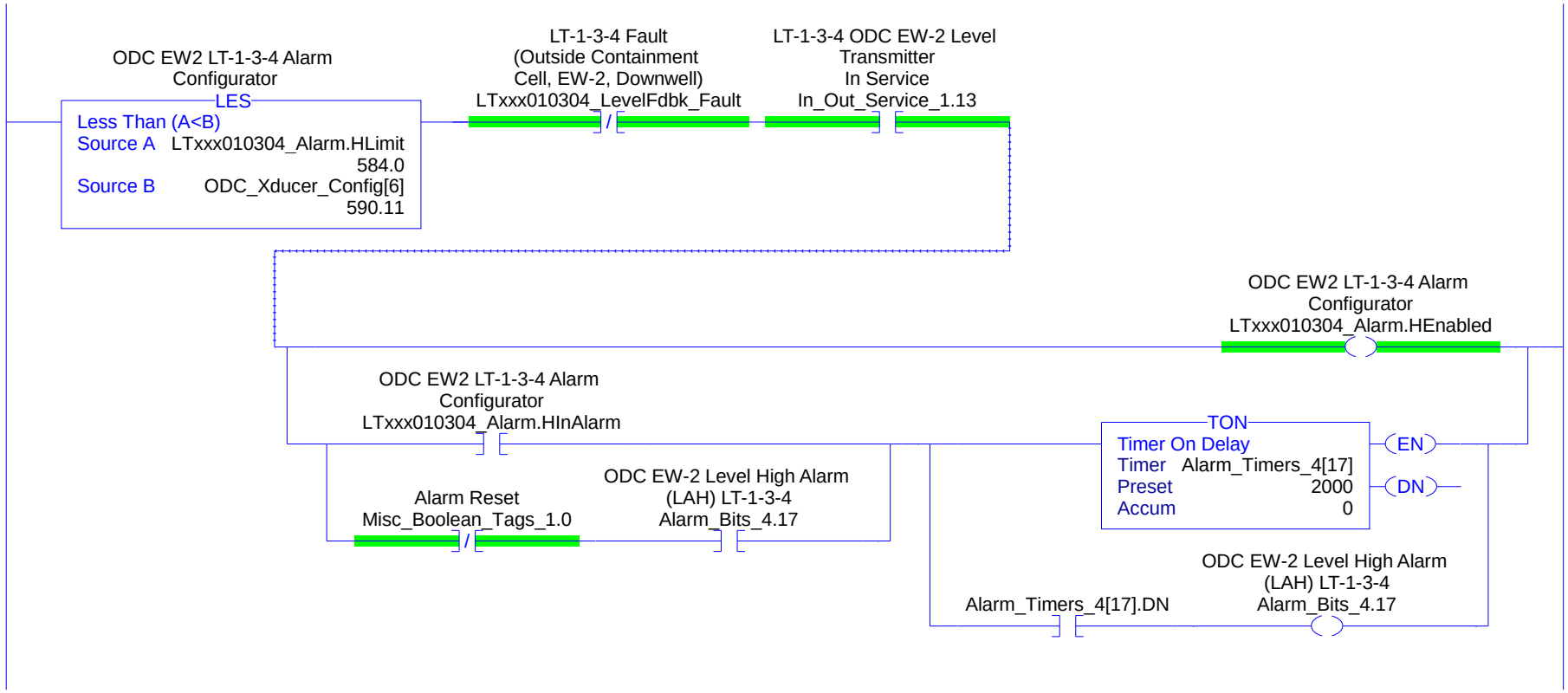
ODC EW2 LT-1-3-4 Alarm Configurator
LES
Less Than (A<B)
Source A LTxxx010304_Alarm.HLimit 584.0
Source B ODC_Xducer_Config[6] 590.11
LT-1-3-4 Fault (Outside Containment Cell, EW-2, Downwell) LTxxx010304_LevelFdbk_Fault
LT-1-3-4 ODC EW-2 Level Transmitter In Service In_Out_Service_1.13
ODC EW2 LT-1-3-4 Alarm Configurator LTxxx010304_Alarm.HEnabled
ODC EW2 LT-1-3-4 Alarm Configurator LTxxx010304_Alarm.HInAlarm
Alarm Reset Misc_Boolean_Tags_1.0
ODC EW-2 Level High Alarm (LAH) LT-1-3-4 Alarm_Bits_4.17
TON
Timer On Delay
Timer Alarm_Timers_4[17]
Preset 2000
Accum 0
EN
DN
Alarm_Timers_4[17].DN
ODC EW-2 Level High Alarm (LAH) LT-1-3-4 Alarm_Bits_4.17

99

LT-1-3-4 Level
(Outside Containment
Cell, EW-2, Downwell)
[1x ft elev.]

GRT
Greater Than (A>B)
Source A ODC_Water_Level[3]
579.6214
Source B Process_Setpoints[16]
576.0

ODC EW2 LT-1-3-4 Alarm
Configurator

LES
Less Than (A<B)
Source A LTxxx010304_Alarm.LLimit
573.5
Source B ODC_Xducer_Config[6]
590.11

LT-1-3-4 Fault
(Outside Containment
Cell, EW-2, Downwell)
LTxxx010304_LevelFdbk_Fault

LT-1-3-4 ODC EW-2 Level
Transmitter
In Service
In_Out_Service_1.13

ODC EW2 LT-1-3-4 Alarm
Configurator
LTxxx010304_Alarm.LInAlarm

Alarm Reset
Misc_Boolean_Tags_1.0

ODC EW-2 Level Low Ala
(LAL) LT-1-3-4
Alarm_Bits_4.18

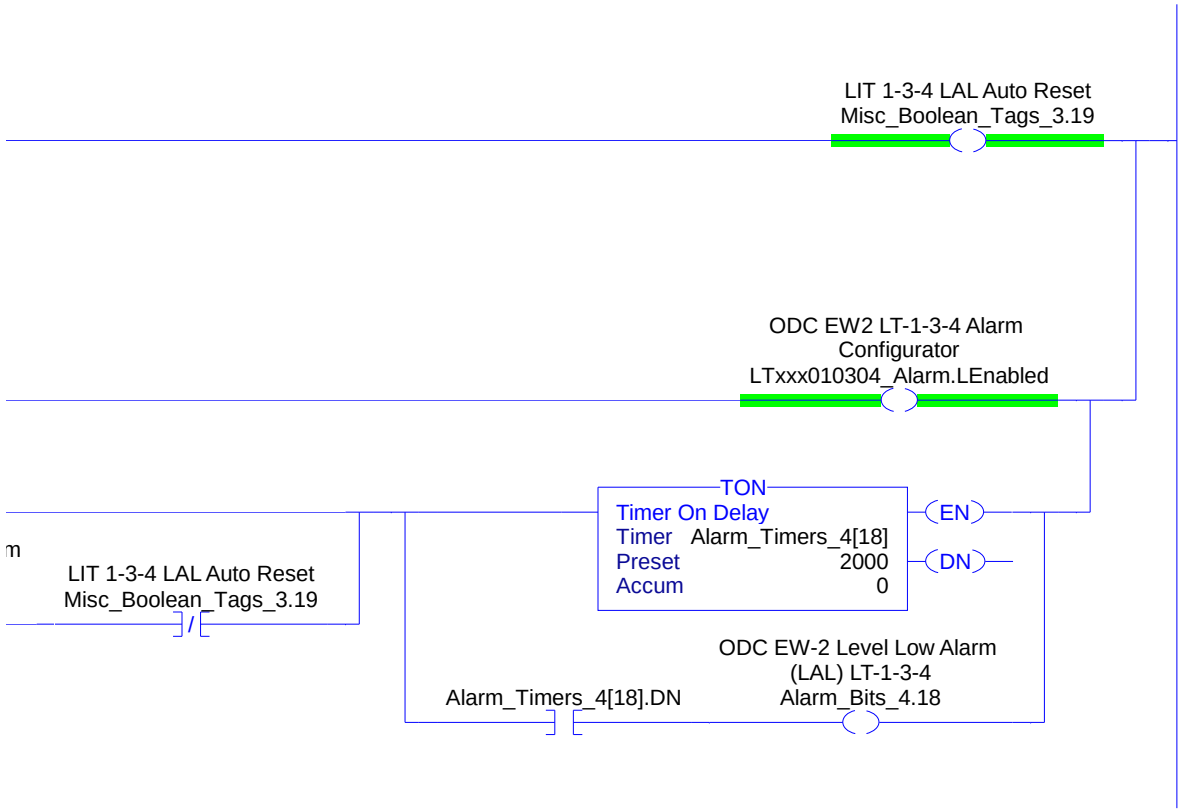
LIT 1-3-4 LAL Auto Reset
Misc_Boolean_Tags_3.19
ODC EW2 LT-1-3-4 Alarm
Configurator
LTxxx010304_Alarm.LEnabled
TON
Timer On Delay
Timer Alarm_Timers_4[18]
Preset 2000
Accum 0
EN
DN
m
LIT 1-3-4 LAL Auto Reset
Misc_Boolean_Tags_3.19
ODC EW-2 Level Low Alarm
(LAL) LT-1-3-4
Alarm_Bits_4.18
Alarm_Timers_4[18].DN

100

ODC EW2 LT-1-3-4 Alarm Configurator
LES
Less Than (A<B)
Source A LTxxx010304_Alarm.LLLimit 573.0
Source B ODC_Xducer_Config[6] 590.11

LT-1-3-4 Fault (Outside Containment Cell, EW-2, Downwell)
LTxxx010304_LevelFdbk_Fault

LT-1-3-4 ODC EW-2 Level Transmitter In Service
In_Out_Service_1.13

ODC EW2 LT-1-3-4 Alarm Configurator
LTxxx010304_Alarm.LLEnabled

ODC EW2 LT-1-3-4 Alarm Configurator
LTxxx010304_Alarm.LLInAlarm

Alarm Reset
Misc_Boolean_Tags_1.0

ODC EW-2 Level Low-Low Alarm (LALL) LT-1-3-4
Alarm_Bits_4.19

TON
Timer On Delay
Timer Alarm_Timers_4[19]
Preset 2000
Accum 0
EN
DN

Alarm_Timers_4[19].DN

ODC EW-2 Level Low-Low Alarm (LALL) LT-1-3-4
Alarm_Bits_4.19

101

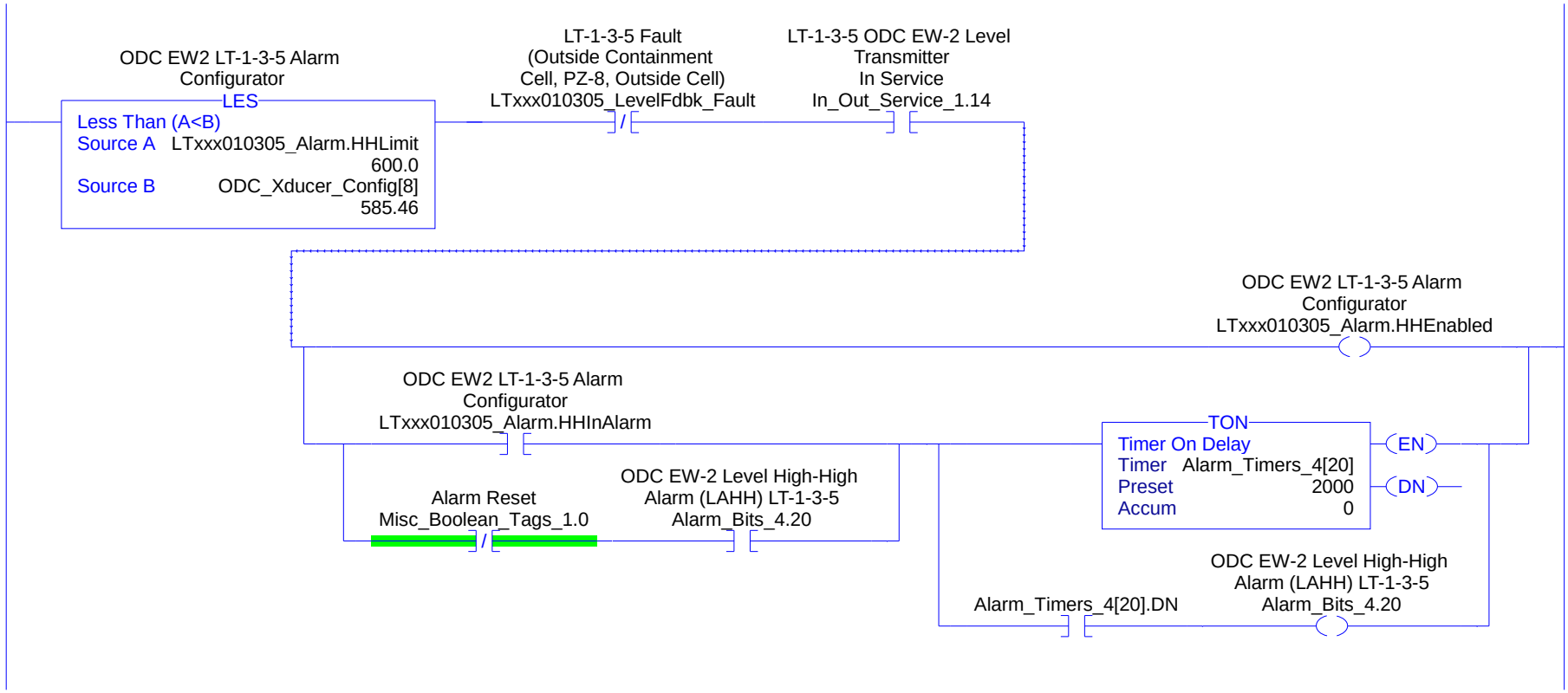
ODC EW2 LT-1-3-5 Alarm Configurator
LES
Less Than (A<B)
Source A LTxxx010305_Alarm.HHLimit
600.0
Source B ODC_Xducer_Config[8]
585.46
LT-1-3-5 Fault (Outside Containment Cell, PZ-8, Outside Cell)
LTxxx010305_LevelFdbk_Fault
LT-1-3-5 ODC EW-2 Level Transmitter In Service
In_Out_Service_1.14
ODC EW2 LT-1-3-5 Alarm Configurator
LTxxx010305_Alarm.HHEnabled
ODC EW2 LT-1-3-5 Alarm Configurator
LTxxx010305_Alarm.HHInAlarm
TON
Timer On Delay
Timer Alarm_Timers_4[20]
Preset 2000
Accum 0
EN
DN
Alarm Reset
Misc_Boolean_Tags_1.0
ODC EW-2 Level High-High Alarm (LAHH) LT-1-3-5
Alarm_Bits_4.20
Alarm_Timers_4[20].DN
ODC EW-2 Level High-High Alarm (LAHH) LT-1-3-5
Alarm_Bits_4.20

102

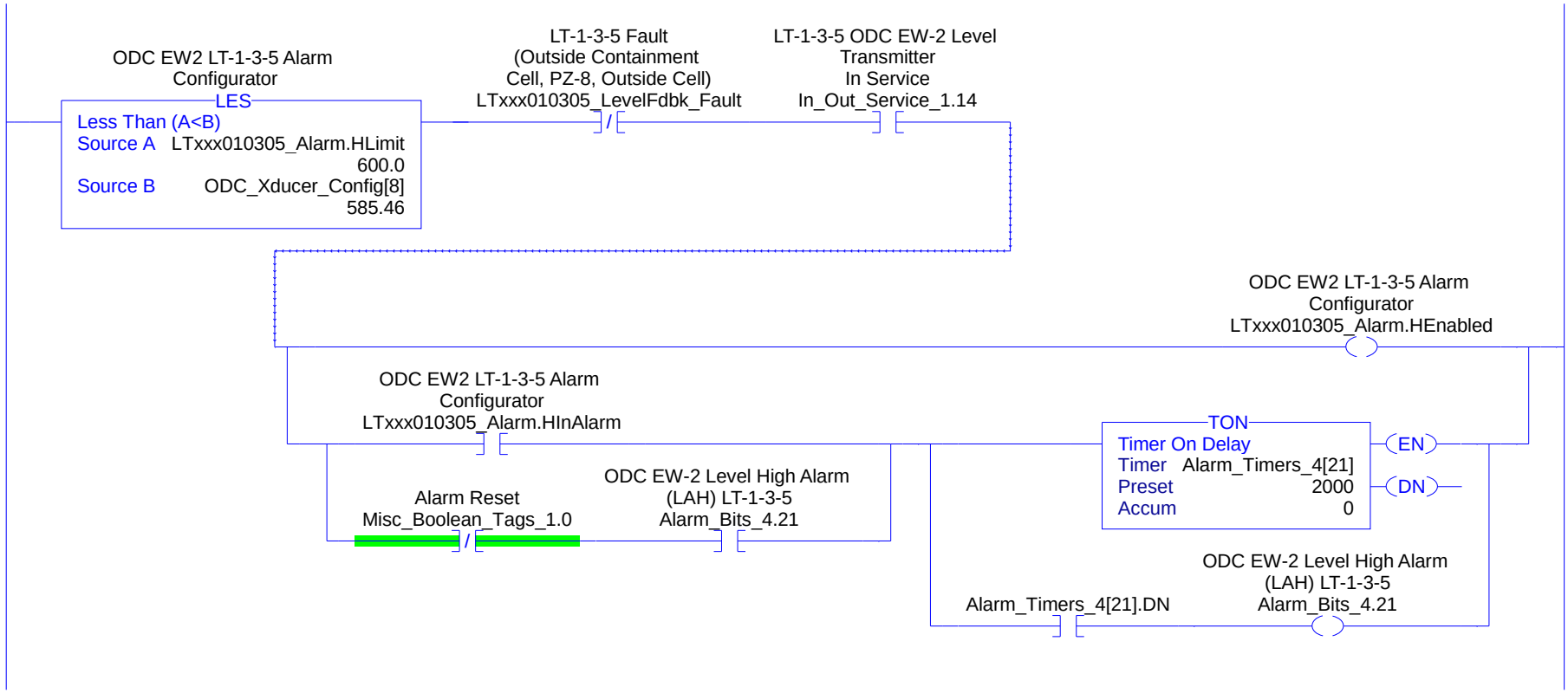
ODC EW2 LT-1-3-5 Alarm Configurator
LES
Less Than (A<B)
Source A LTxxx010305_Alarm.HLimit 600.0
Source B ODC_Xducer_Config[8] 585.46
LT-1-3-5 Fault (Outside Containment Cell, PZ-8, Outside Cell) LTxxx010305_LevelFdbk_Fault
LT-1-3-5 ODC EW-2 Level Transmitter In Service In_Out_Service_1.14
ODC EW2 LT-1-3-5 Alarm Configurator LTxxx010305_Alarm.HEnabled
ODC EW2 LT-1-3-5 Alarm Configurator LTxxx010305_Alarm.HInAlarm
Alarm Reset Misc_Boolean_Tags_1.0
ODC EW-2 Level High Alarm (LAH) LT-1-3-5 Alarm_Bits_4.21
TON
Timer On Delay
Timer Alarm_Timers_4[21]
Preset 2000
Accum 0
EN
DN
Alarm_Timers_4[21].DN
ODC EW-2 Level High Alarm (LAH) LT-1-3-5 Alarm_Bits_4.21

103

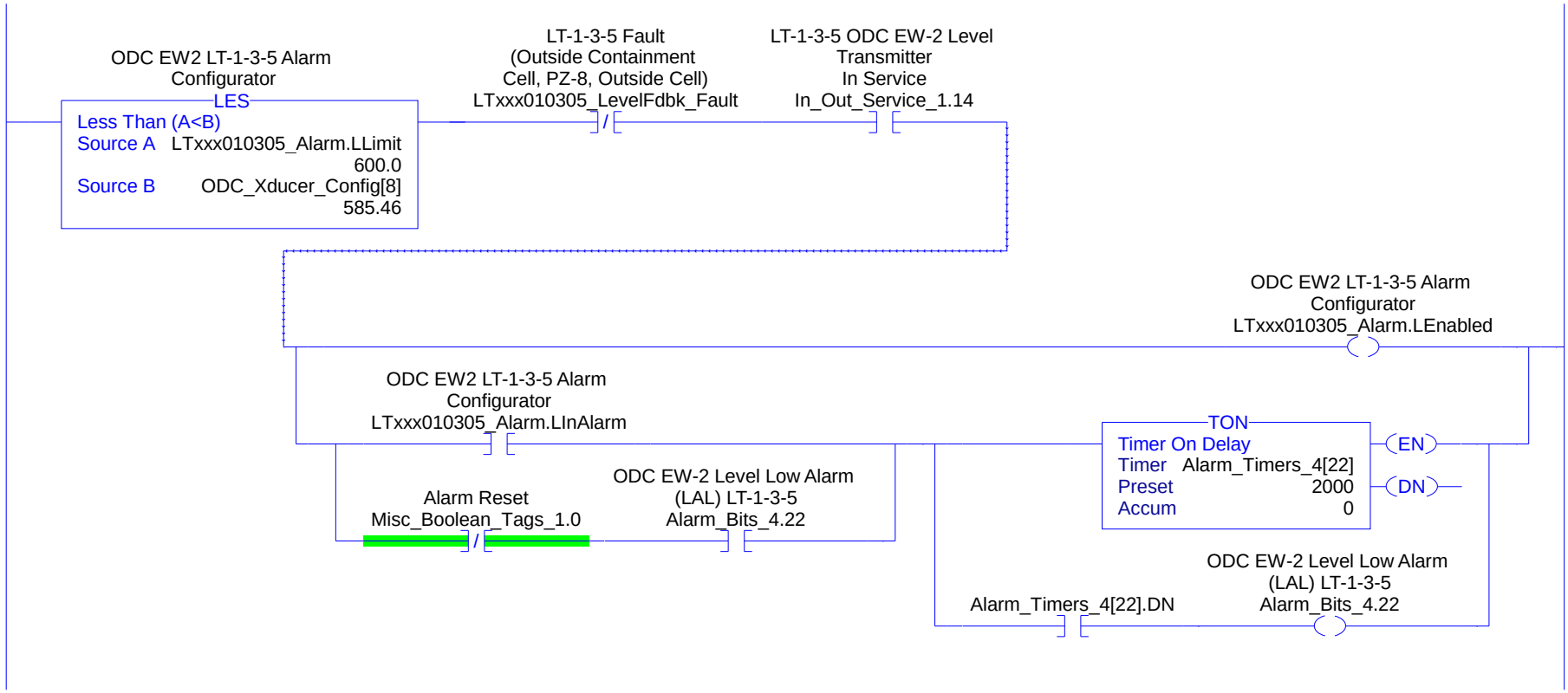
ODC EW2 LT-1-3-5 Alarm Configurator
LES
Less Than (A<B)
Source A LTxxx010305_Alarm.LLimit 600.0
Source B ODC_Xducer_Config[8] 585.46
LT-1-3-5 Fault (Outside Containment Cell, PZ-8, Outside Cell) LTxxx010305_LevelFdbk_Fault
LT-1-3-5 ODC EW-2 Level Transmitter In Service In_Out_Service_1.14
ODC EW2 LT-1-3-5 Alarm Configurator LTxxx010305_Alarm.LEnabled
ODC EW2 LT-1-3-5 Alarm Configurator LTxxx010305_Alarm.LInAlarm
Alarm Reset Misc_Boolean_Tags_1.0
ODC EW-2 Level Low Alarm (LAL) LT-1-3-5 Alarm_Bits_4.22
TON
Timer On Delay
Timer Alarm_Timers_4[22]
Preset 2000
Accum 0
EN
DN
Alarm_Timers_4[22].DN
ODC EW-2 Level Low Alarm (LAL) LT-1-3-5 Alarm_Bits_4.22

104

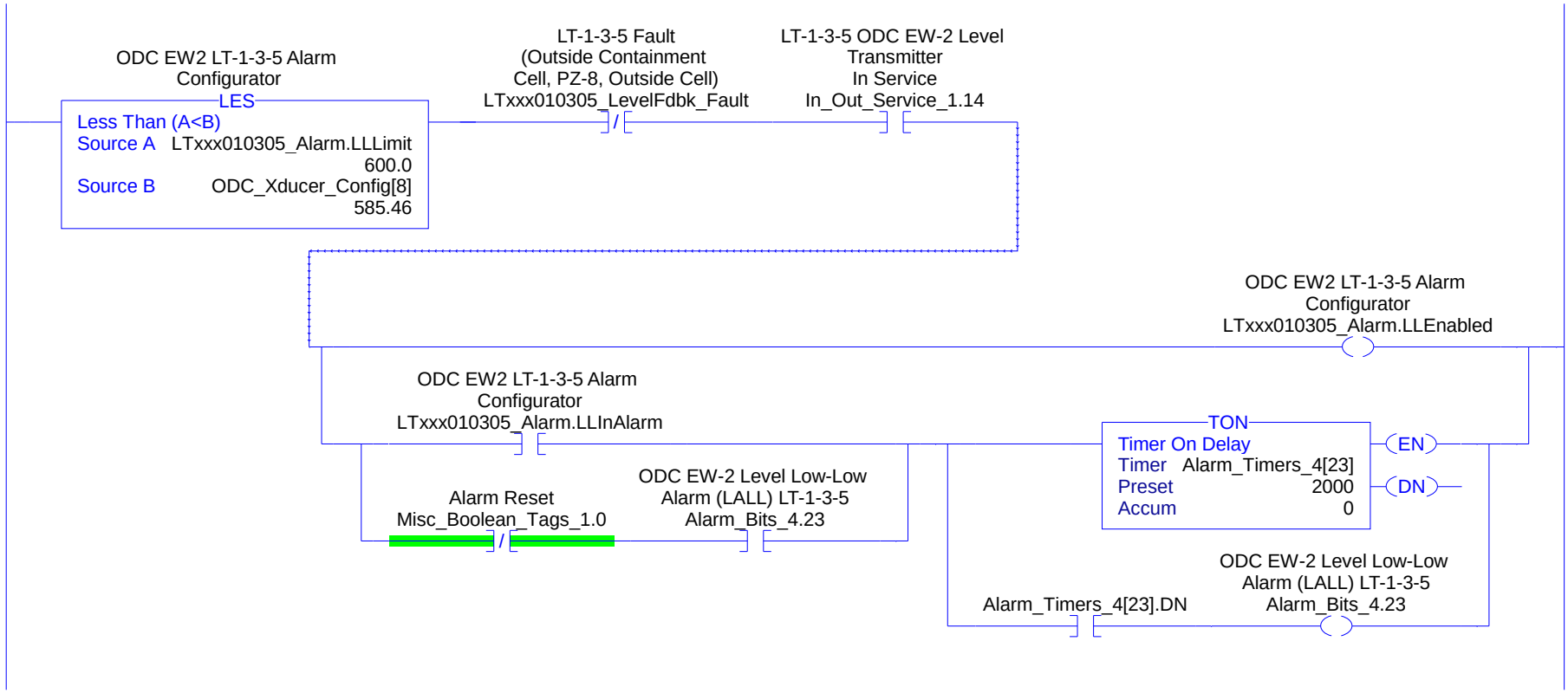
ODC EW2 LT-1-3-5 Alarm Configurator
LES
Less Than (A<B)
Source A LTxxx010305_Alarm.LLLimit
600.0
Source B ODC_Xducer_Config[8]
585.46
LT-1-3-5 Fault (Outside Containment Cell, PZ-8, Outside Cell)
LTxxx010305_LevelFdbk_Fault
LT-1-3-5 ODC EW-2 Level Transmitter In Service
In_Out_Service_1.14
ODC EW2 LT-1-3-5 Alarm Configurator
LTxxx010305_Alarm.LLEnabled
ODC EW2 LT-1-3-5 Alarm Configurator
LTxxx010305_Alarm.LLInAlarm
Alarm Reset
Misc_Boolean_Tags_1.0
ODC EW-2 Level Low-Low Alarm (LALL) LT-1-3-5
Alarm_Bits_4.23
TON
Timer On Delay
Timer Alarm_Timers_4[23]
Preset 2000
Accum 0
EN
DN
Alarm_Timers_4[23].DN
ODC EW-2 Level Low-Low Alarm (LALL) LT-1-3-5
Alarm_Bits_4.23

105

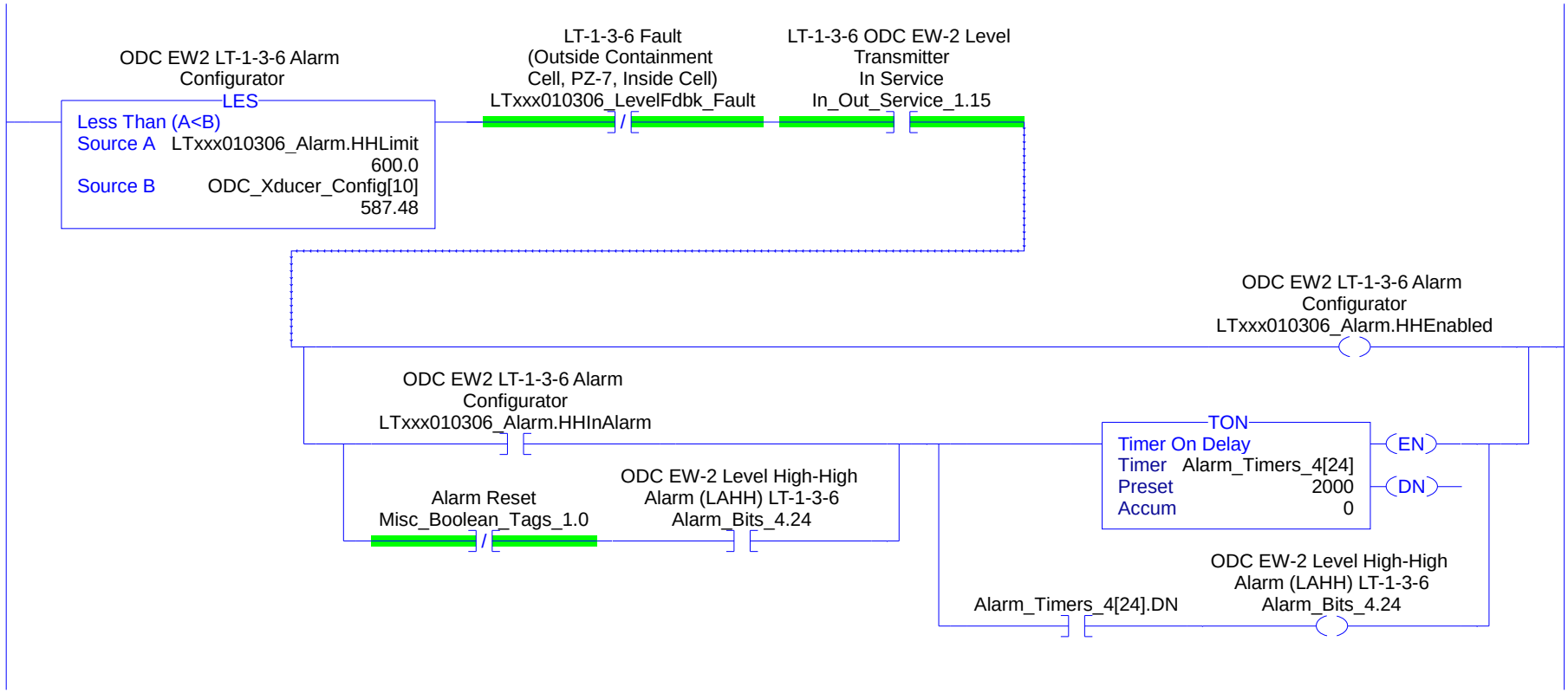
ODC EW2 LT-1-3-6 Alarm Configurator
LES
Less Than (A<B)
Source A LTxxx010306_Alarm.HHLimit
600.0
Source B ODC_Xducer_Config[10]
587.48
LT-1-3-6 Fault (Outside Containment Cell, PZ-7, Inside Cell) LTxxx010306_LevelFdbk_Fault
LT-1-3-6 ODC EW-2 Level Transmitter In Service In_Out_Service_1.15
ODC EW2 LT-1-3-6 Alarm Configurator LTxxx010306_Alarm.HHEnabled
ODC EW2 LT-1-3-6 Alarm Configurator LTxxx010306_Alarm.HHInAlarm
Alarm Reset Misc_Boolean_Tags_1.0
ODC EW-2 Level High-High Alarm (LAHH) LT-1-3-6 Alarm_Bits_4.24
TON
Timer On Delay
Timer Alarm_Timers_4[24]
Preset 2000
Accum 0
EN
DN
Alarm_Timers_4[24].DN
ODC EW-2 Level High-High Alarm (LAHH) LT-1-3-6 Alarm_Bits_4.24

106

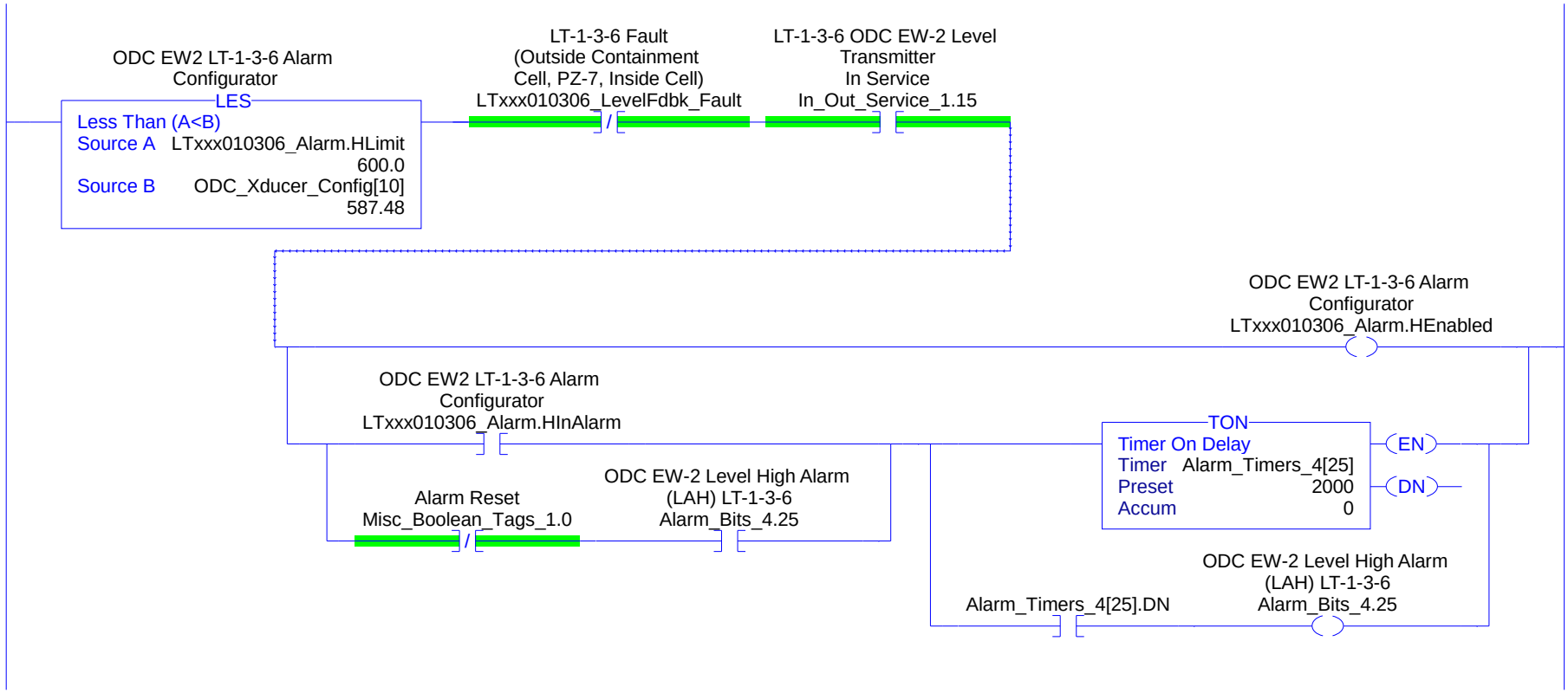
ODC EW2 LT-1-3-6 Alarm Configurator
LES
Less Than (A<B)
Source A LTxxx010306_Alarm.HLimit 600.0
Source B ODC_Xducer_Config[10] 587.48
LT-1-3-6 Fault (Outside Containment Cell, PZ-7, Inside Cell) LTxxx010306_LevelFdbk_Fault
LT-1-3-6 ODC EW-2 Level Transmitter In Service In_Out_Service_1.15
ODC EW2 LT-1-3-6 Alarm Configurator LTxxx010306_Alarm.HEnabled
ODC EW2 LT-1-3-6 Alarm Configurator LTxxx010306_Alarm.HInAlarm
Alarm Reset Misc_Boolean_Tags_1.0
ODC EW-2 Level High Alarm (LAH) LT-1-3-6 Alarm_Bits_4.25
TON
Timer On Delay
Timer Alarm_Timers_4[25]
Preset 2000
Accum 0
EN
DN
Alarm_Timers_4[25].DN
ODC EW-2 Level High Alarm (LAH) LT-1-3-6 Alarm_Bits_4.25

107

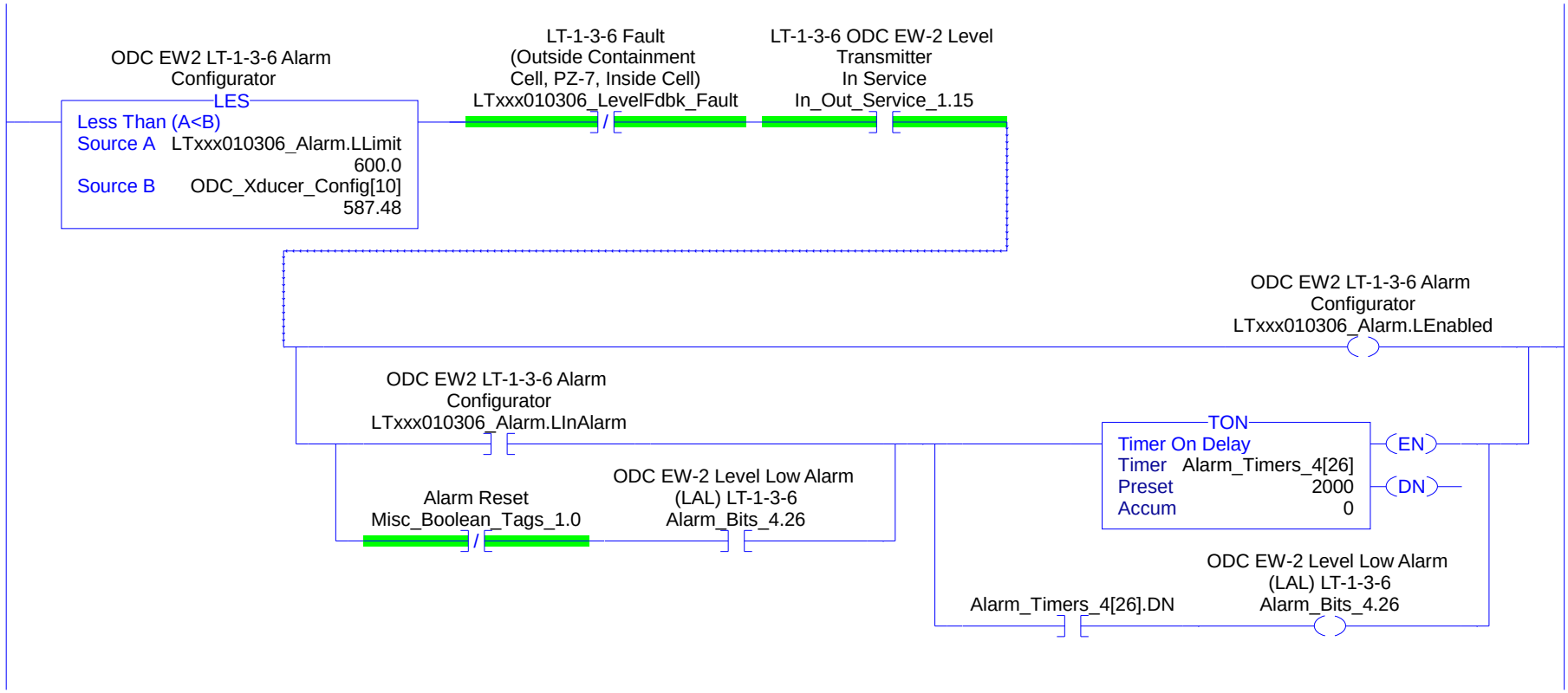
ODC EW2 LT-1-3-6 Alarm Configurator
LES
Less Than (A<B)
Source A LTxxx010306_Alarm.LLimit 600.0
Source B ODC_Xducer_Config[10] 587.48
LT-1-3-6 Fault (Outside Containment Cell, PZ-7, Inside Cell) LTxxx010306_LevelFdbk_Fault
LT-1-3-6 ODC EW-2 Level Transmitter In Service In_Out_Service_1.15
ODC EW2 LT-1-3-6 Alarm Configurator LTxxx010306_Alarm.LEnabled
ODC EW2 LT-1-3-6 Alarm Configurator LTxxx010306_Alarm.LInAlarm
Alarm Reset Misc_Boolean_Tags_1.0
ODC EW-2 Level Low Alarm (LAL) LT-1-3-6 Alarm_Bits_4.26
TON
Timer On Delay
Timer Alarm_Timers_4[26]
Preset 2000
Accum 0
EN
DN
Alarm_Timers_4[26].DN
ODC EW-2 Level Low Alarm (LAL) LT-1-3-6 Alarm_Bits_4.26

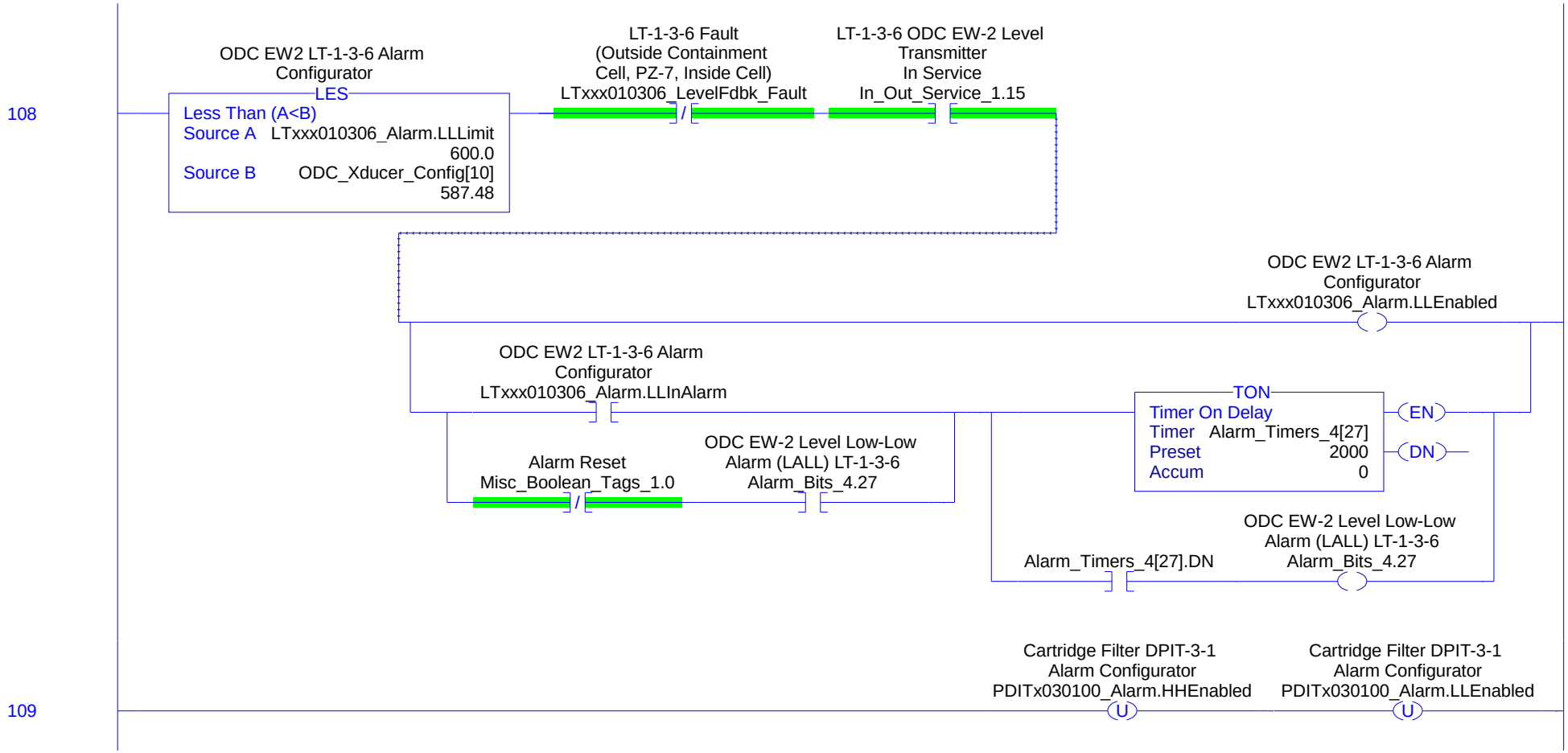
108
ODC EW2 LT-1-3-6 Alarm Configurator
LES
Less Than (A<B)
Source A LTxxx010306_Alarm.LLLimit
600.0
Source B ODC_Xducer_Config[10]
587.48
LT-1-3-6 Fault (Outside Containment Cell, PZ-7, Inside Cell)
LTxxx010306_LevelFdbk_Fault
LT-1-3-6 ODC EW-2 Level Transmitter In Service
In_Out_Service_1.15
ODC EW2 LT-1-3-6 Alarm Configurator
LTxxx010306_Alarm.LLEnabled
ODC EW2 LT-1-3-6 Alarm Configurator
LTxxx010306_Alarm.LLInAlarm
TON
Timer On Delay
Timer Alarm_Timers_4[27]
Preset 2000
Accum 0
EN
DN
Alarm Reset
Misc_Boolean_Tags_1.0
ODC EW-2 Level Low-Low Alarm (LALL) LT-1-3-6
Alarm_Bits_4.27
ODC EW-2 Level Low-Low Alarm (LALL) LT-1-3-6
Alarm_Bits_4.27
Alarm_Timers_4[27].DN
109
Cartridge Filter DPIT-3-1 Alarm Configurator
PDITx030100_Alarm.HHEnabled
U
Cartridge Filter DPIT-3-1 Alarm Configurator
PDITx030100_Alarm.LLEnabled
U

110

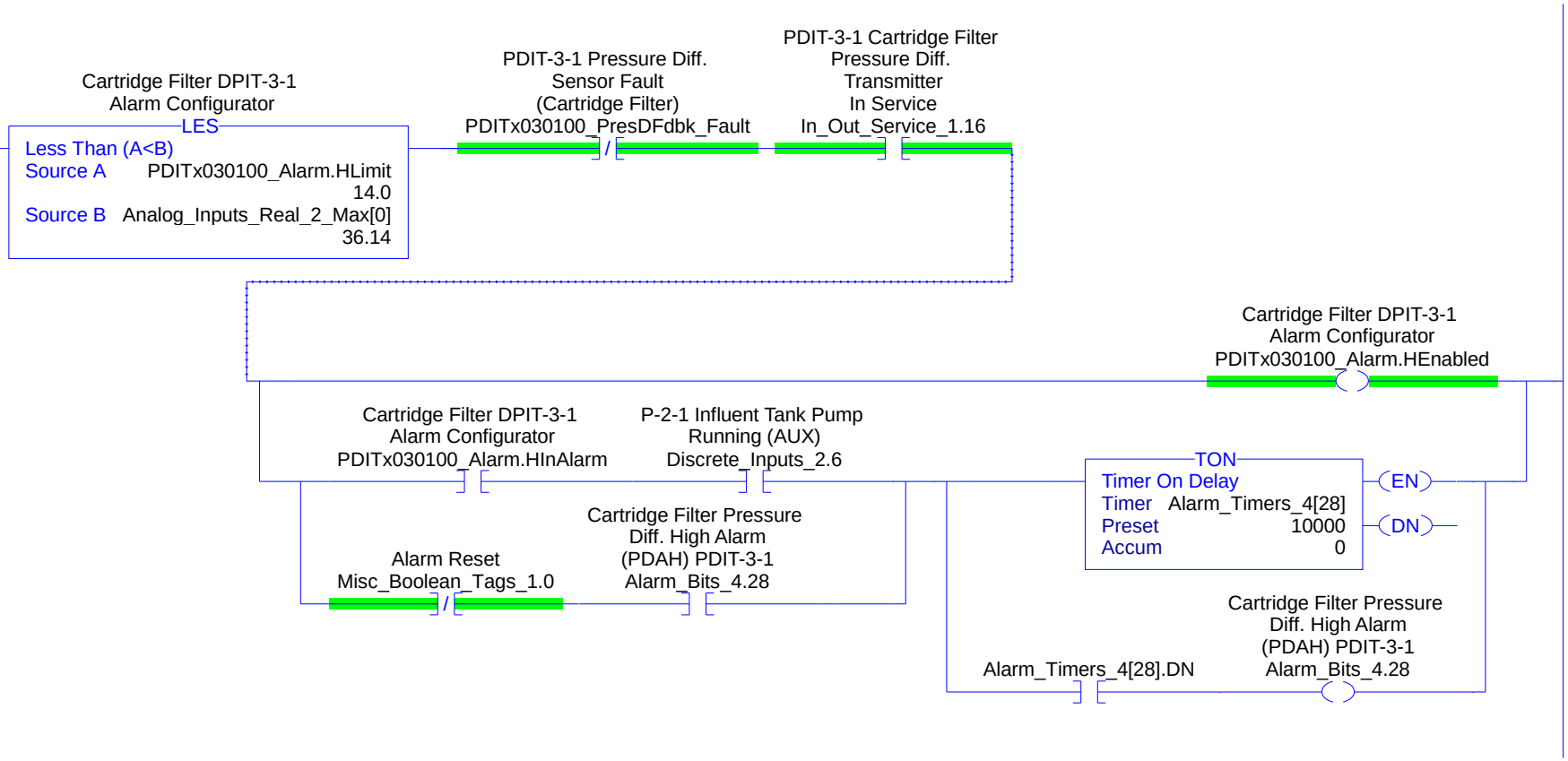
Cartridge Filter DPIT-3-1
Alarm Configurator
LES
Less Than (A<B)
Source A PDITx030100_Alarm.HLimit
14.0
Source B Analog_Inputs_Real_2_Max[0]
36.14
PDIT-3-1 Pressure Diff.
Sensor Fault
(Cartridge Filter)
PDITx030100_PresDFdbk_Fault
PDIT-3-1 Cartridge Filter
Pressure Diff.
Transmitter
In Service
In_Out_Service_1.16
Cartridge Filter DPIT-3-1
Alarm Configurator
PDITx030100_Alarm.HEnabled
Cartridge Filter DPIT-3-1
Alarm Configurator
PDITx030100_Alarm.HInAlarm
P-2-1 Influent Tank Pump
Running (AUX)
Discrete_Inputs_2.6
TON
Timer On Delay
Timer Alarm_Timers_4[28]
Preset 10000
Accum 0
EN
DN
Cartridge Filter Pressure
Diff. High Alarm
(PDAH) PDIT-3-1
Alarm_Bits_4.28
Alarm Reset
Misc_Boolean_Tags_1.0
Cartridge Filter Pressure
Diff. High Alarm
(PDAH) PDIT-3-1
Alarm_Bits_4.28
Alarm_Timers_4[28].DN

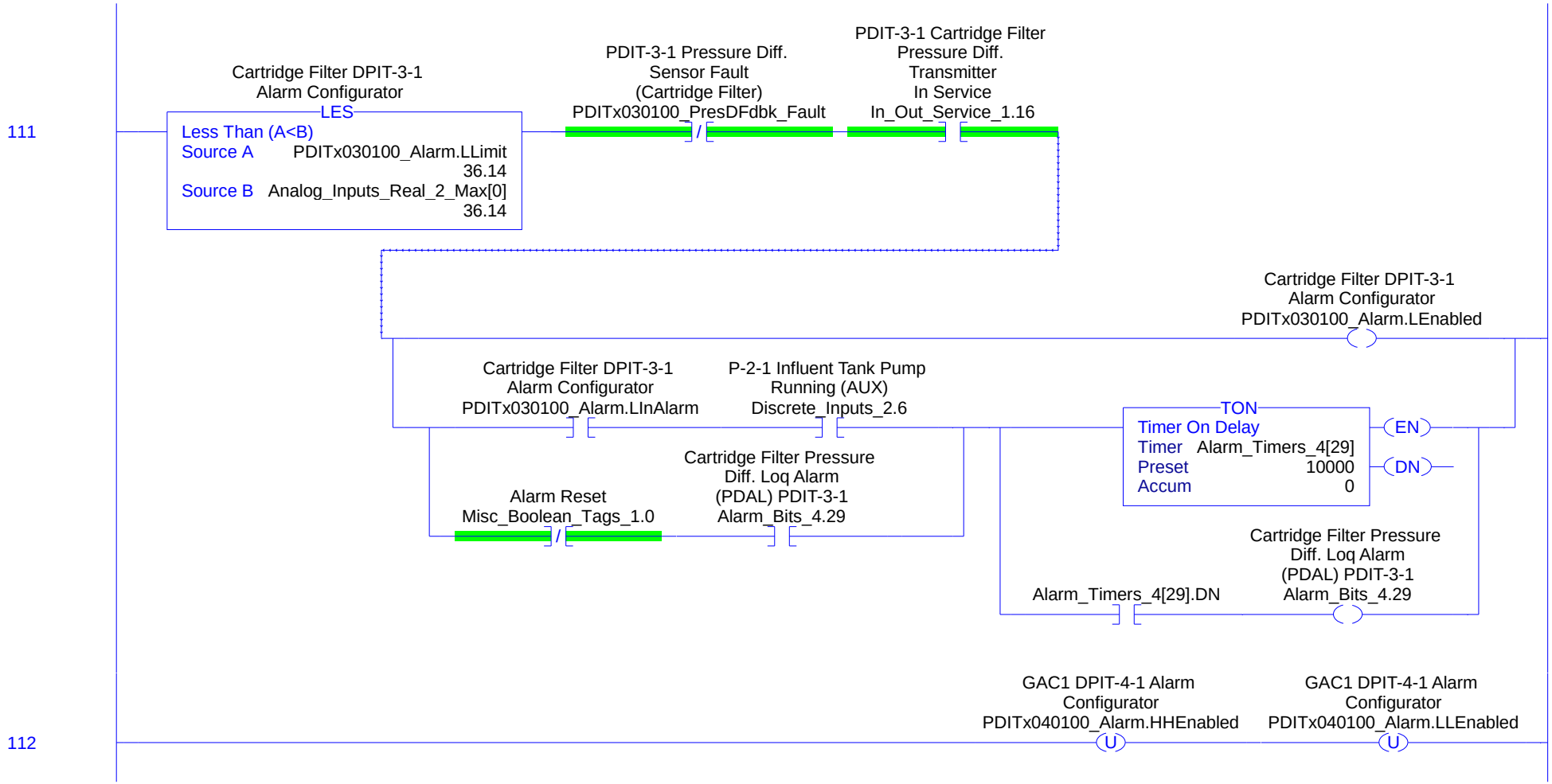
111
Cartridge Filter DPIT-3-1
Alarm Configurator
LES
Less Than (A<B)
Source A PDITx030100_Alarm.LLimit
36.14
Source B Analog_Inputs_Real_2_Max[0]
36.14
PDIT-3-1 Pressure Diff.
Sensor Fault
(Cartridge Filter)
PDITx030100_PresDFdbk_Fault
PDIT-3-1 Cartridge Filter
Pressure Diff.
Transmitter
In Service
In_Out_Service_1.16
Cartridge Filter DPIT-3-1
Alarm Configurator
PDITx030100_Alarm.LEnabled
Cartridge Filter DPIT-3-1
Alarm Configurator
PDITx030100_Alarm.LInAlarm
P-2-1 Influent Tank Pump
Running (AUX)
Discrete_Inputs_2.6
TON
Timer On Delay
Timer Alarm_Timers_4[29]
Preset 10000
Accum 0
EN
DN
Cartridge Filter Pressure
Diff. Loq Alarm
(PDAL) PDIT-3-1
Alarm_Bits_4.29
Alarm Reset
Misc_Boolean_Tags_1.0
Cartridge Filter Pressure
Diff. Loq Alarm
(PDAL) PDIT-3-1
Alarm_Bits_4.29
Alarm_Timers_4[29].DN
GAC1 DPIT-4-1 Alarm
Configurator
PDITx040100_Alarm.HHEnabled
GAC1 DPIT-4-1 Alarm
Configurator
PDITx040100_Alarm.LLEnabled
112
U
U

113

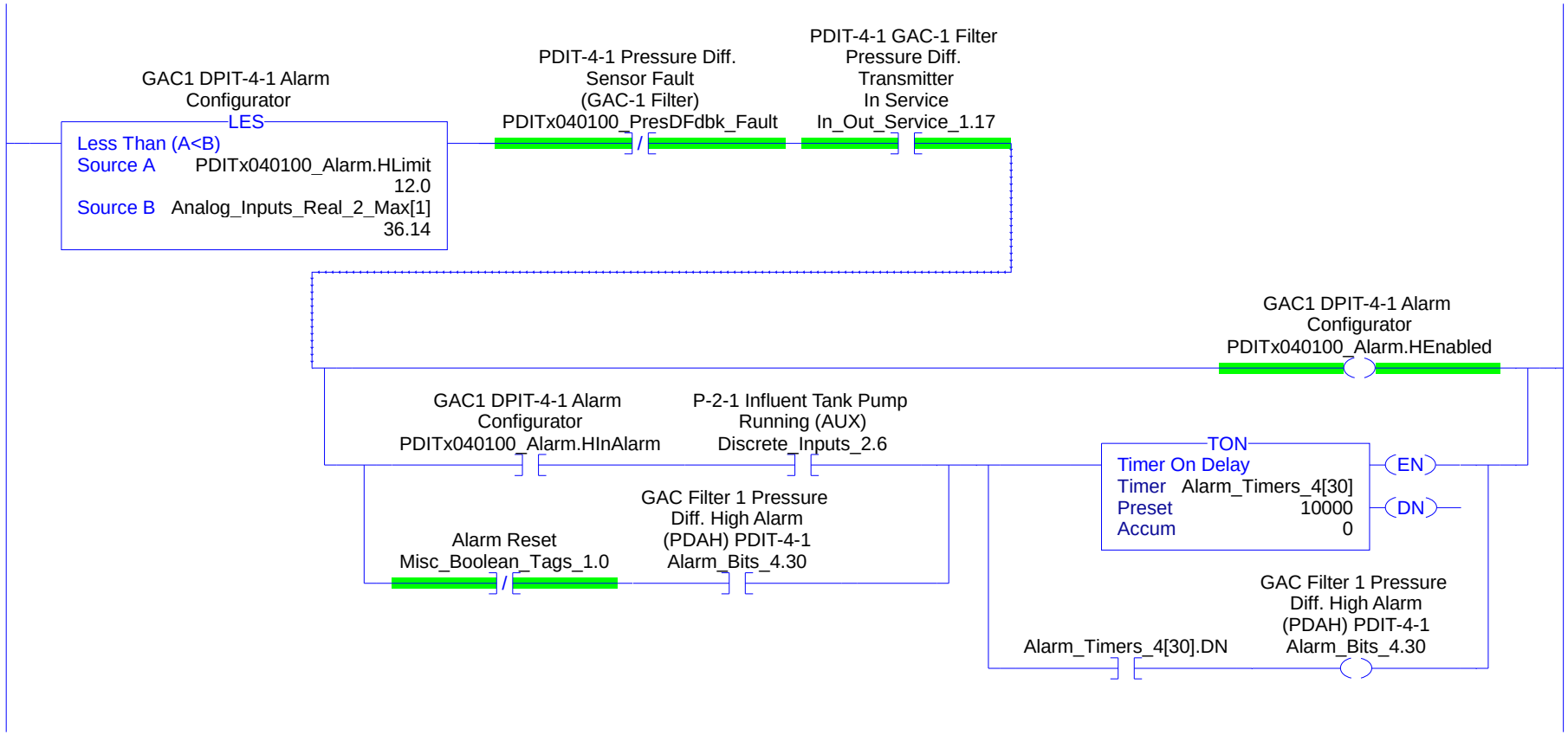
GAC1 DPIT-4-1 Alarm Configurator
LES
Less Than (A<B)
Source A PDITx040100_Alarm.HLimit 12.0
Source B Analog_Inputs_Real_2_Max[1] 36.14
PDIT-4-1 Pressure Diff. Sensor Fault (GAC-1 Filter)
PDITx040100_PresDFdbk_Fault
PDIT-4-1 GAC-1 Filter Pressure Diff. Transmitter In Service
In_Out_Service_1.17
GAC1 DPIT-4-1 Alarm Configurator
PDITx040100_Alarm.HEnabled
GAC1 DPIT-4-1 Alarm Configurator
PDITx040100_Alarm.HInAlarm
P-2-1 Influent Tank Pump Running (AUX)
Discrete_Inputs_2.6
TON
Timer On Delay
Timer Alarm_Timers_4[30]
Preset 10000
Accum 0
EN
DN
GAC Filter 1 Pressure Diff. High Alarm (PDAH) PDIT-4-1
Alarm_Bits_4.30
Alarm Reset
Misc_Boolean_Tags_1.0
GAC Filter 1 Pressure Diff. High Alarm (PDAH) PDIT-4-1
Alarm_Bits_4.30
Alarm_Timers_4[30].DN

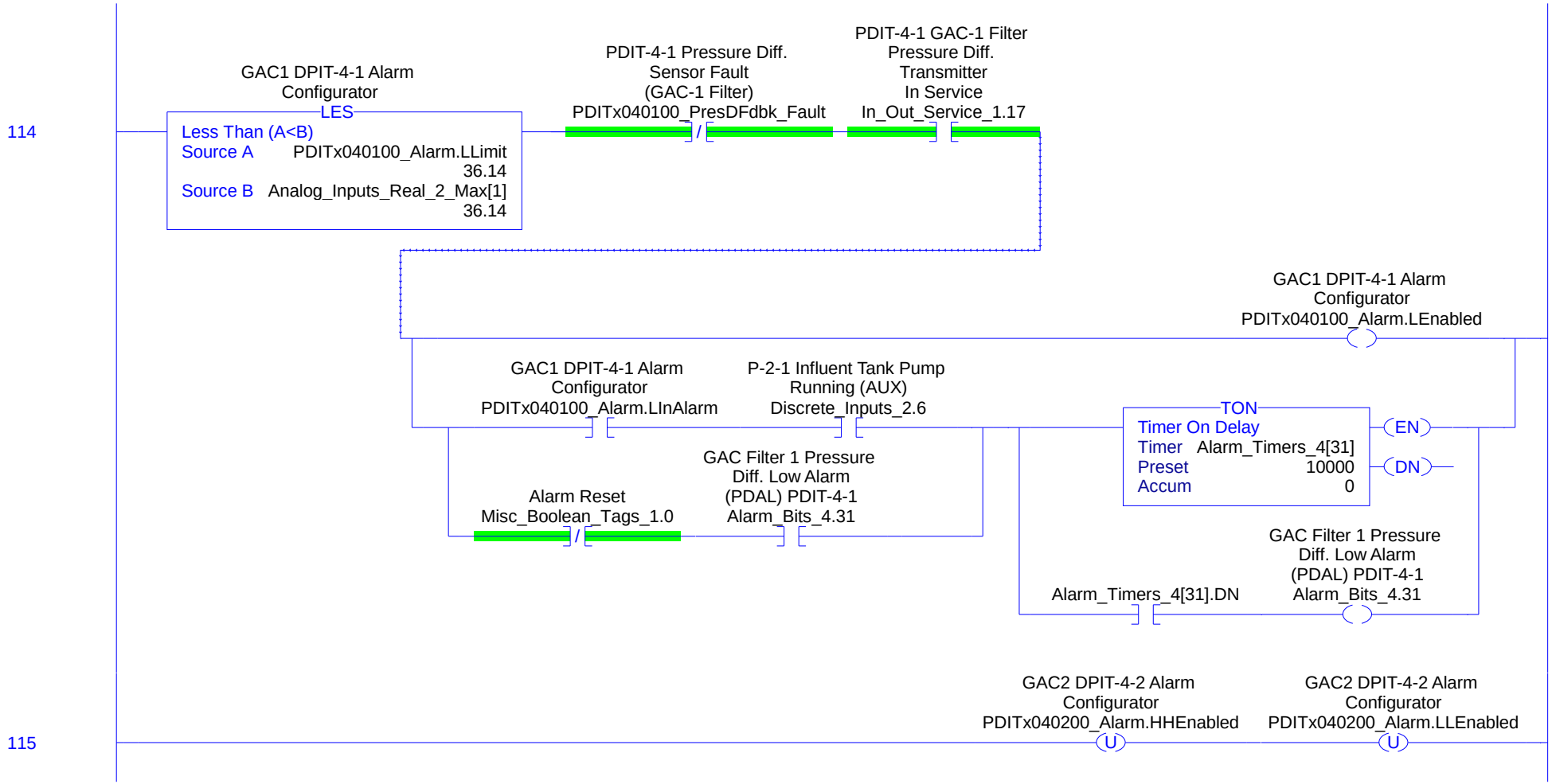
114
GAC1 DPIT-4-1 Alarm Configurator
LES
Less Than (A<B)
Source A PDITx040100_Alarm.LLimit 36.14
Source B Analog_Inputs_Real_2_Max[1] 36.14
PDIT-4-1 Pressure Diff. Sensor Fault (GAC-1 Filter)
PDITx040100_PresDFdbk_Fault
PDIT-4-1 GAC-1 Filter Pressure Diff. Transmitter In Service
In_Out_Service_1.17
GAC1 DPIT-4-1 Alarm Configurator
PDITx040100_Alarm.LEnabled
GAC1 DPIT-4-1 Alarm Configurator
PDITx040100_Alarm.LInAlarm
P-2-1 Influent Tank Pump Running (AUX)
Discrete_Inputs_2.6
TON
Timer On Delay
Timer Alarm_Timers_4[31]
Preset 10000
Accum 0
EN
DN
Alarm Reset
Misc_Boolean_Tags_1.0
GAC Filter 1 Pressure Diff. Low Alarm (PDAL) PDIT-4-1
Alarm_Bits_4.31
Alarm_Timers_4[31].DN
GAC Filter 1 Pressure Diff. Low Alarm (PDAL) PDIT-4-1
Alarm_Bits_4.31
115
GAC2 DPIT-4-2 Alarm Configurator
PDITx040200_Alarm.HHEnabled
U
GAC2 DPIT-4-2 Alarm Configurator
PDITx040200_Alarm.LLEnabled
U

116

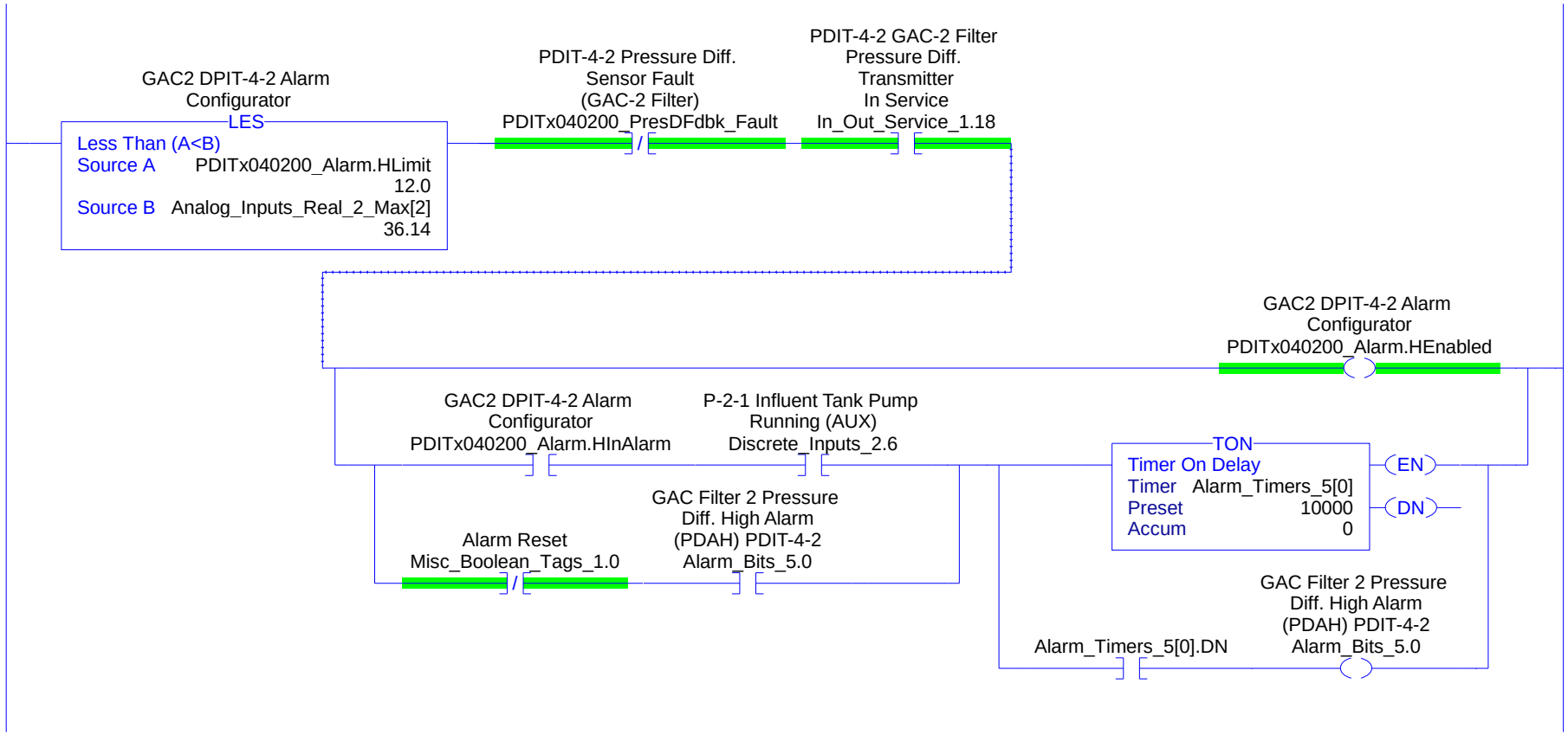
GAC2 DPIT-4-2 Alarm Configurator
LES
Less Than (A<B)
Source A PDITx040200_Alarm.HLimit 12.0
Source B Analog_Inputs_Real_2_Max[2] 36.14
PDIT-4-2 Pressure Diff. Sensor Fault (GAC-2 Filter)
PDITx040200_PresDFdbk_Fault
PDIT-4-2 GAC-2 Filter Pressure Diff. Transmitter In Service
In_Out_Service_1.18
GAC2 DPIT-4-2 Alarm Configurator
PDITx040200_Alarm.HEnabled
GAC2 DPIT-4-2 Alarm Configurator
PDITx040200_Alarm.HInAlarm
P-2-1 Influent Tank Pump Running (AUX)
Discrete_Inputs_2.6
TON
Timer On Delay
Timer Alarm_Timers_5[0]
Preset 10000
Accum 0
EN
DN
Alarm Reset
Misc_Boolean_Tags_1.0
GAC Filter 2 Pressure Diff. High Alarm (PDAH) PDIT-4-2
Alarm_Bits_5.0
Alarm_Timers_5[0].DN
GAC Filter 2 Pressure Diff. High Alarm (PDAH) PDIT-4-2
Alarm_Bits_5.0

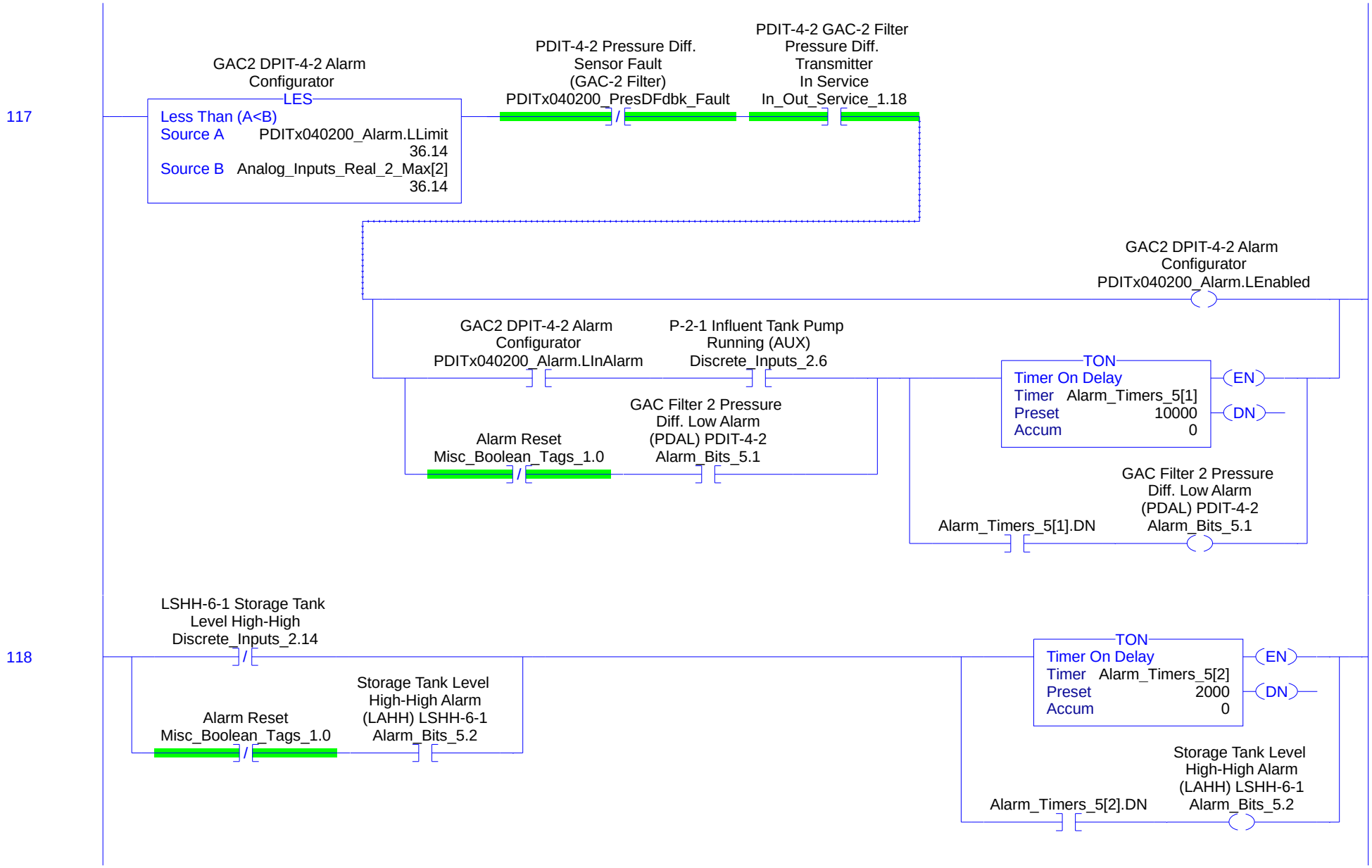
117
GAC2 DPIT-4-2 Alarm Configurator
LES
Less Than (A<B)
Source A PDITx040200_Alarm.LLimit 36.14
Source B Analog_Inputs_Real_2_Max[2] 36.14
PDIT-4-2 Pressure Diff. Sensor Fault (GAC-2 Filter)
PDITx040200_PresDFdbk_Fault
PDIT-4-2 GAC-2 Filter Pressure Diff. Transmitter In Service
In_Out_Service_1.18
GAC2 DPIT-4-2 Alarm Configurator
PDITx040200_Alarm.LEnabled
GAC2 DPIT-4-2 Alarm Configurator
PDITx040200_Alarm.LInAlarm
P-2-1 Influent Tank Pump Running (AUX)
Discrete_Inputs_2.6
TON
Timer On Delay
Timer Alarm_Timers_5[1]
Preset 10000
Accum 0
EN
DN
Alarm Reset
Misc_Boolean_Tags_1.0
GAC Filter 2 Pressure Diff. Low Alarm (PDAL) PDIT-4-2
Alarm_Bits_5.1
Alarm_Timers_5[1].DN
GAC Filter 2 Pressure Diff. Low Alarm (PDAL) PDIT-4-2
Alarm_Bits_5.1
118
LSHH-6-1 Storage Tank Level High-High
Discrete_Inputs_2.14
TON
Timer On Delay
Timer Alarm_Timers_5[2]
Preset 2000
Accum 0
EN
DN
Alarm Reset
Misc_Boolean_Tags_1.0
Storage Tank Level High-High Alarm (LAHH) LSHH-6-1
Alarm_Bits_5.2
Alarm_Timers_5[2].DN
Storage Tank Level High-High Alarm (LAHH) LSHH-6-1
Alarm_Bits_5.2

119

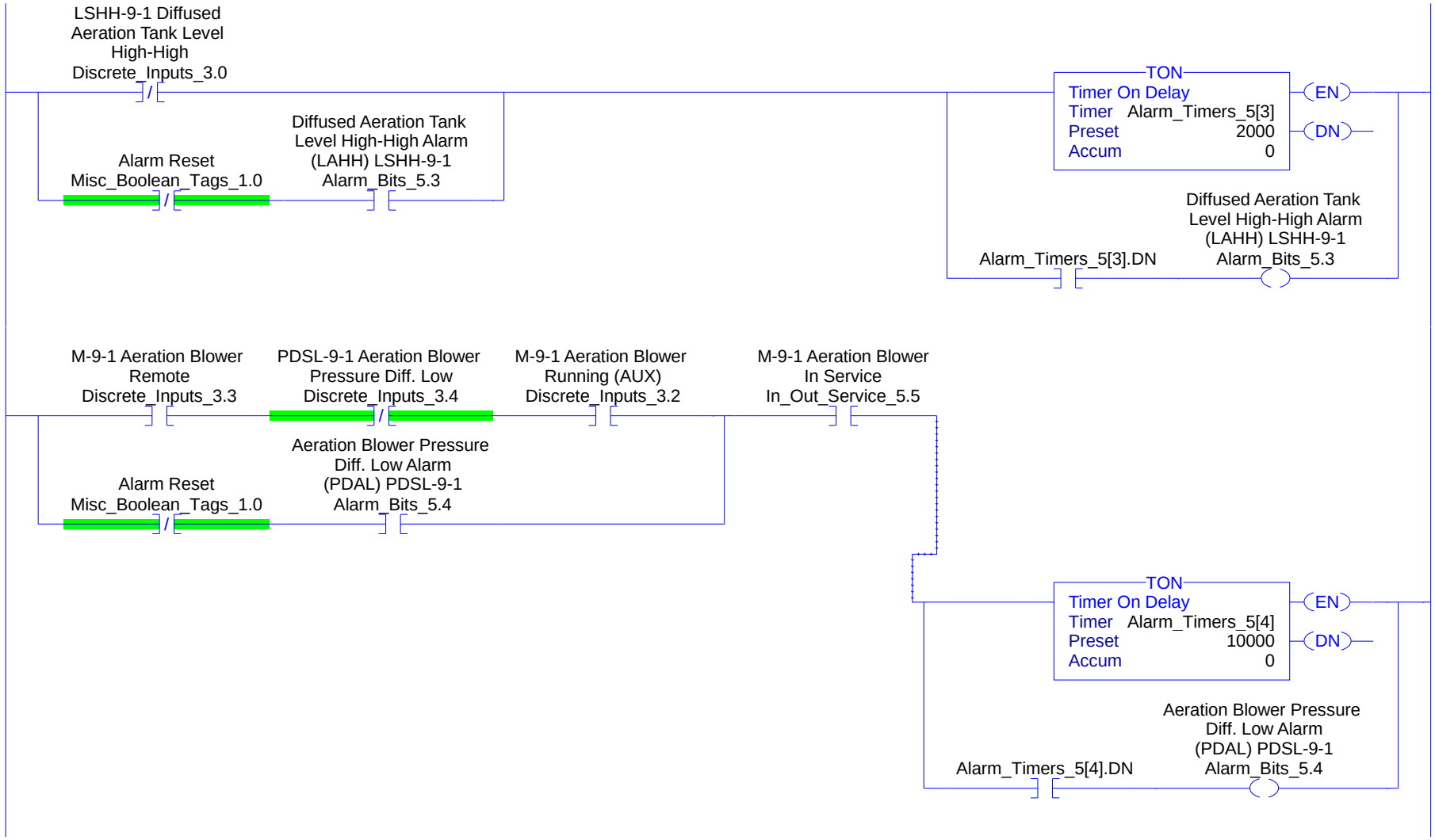
LSHH-9-1 Diffused Aeration Tank Level High-High Discrete_Inputs_3.0
Alarm Reset Misc_Boolean_Tags_1.0
Diffused Aeration Tank Level High-High Alarm (LAHH) LSHH-9-1 Alarm_Bits_5.3
TON
Timer On Delay
Timer Alarm_Timers_5[3]
Preset 2000
Accum 0
EN
DN
Alarm_Timers_5[3].DN
Diffused Aeration Tank Level High-High Alarm (LAHH) LSHH-9-1 Alarm_Bits_5.3
120
M-9-1 Aeration Blower Remote Discrete_Inputs_3.3
PDSL-9-1 Aeration Blower Pressure Diff. Low Discrete_Inputs_3.4
M-9-1 Aeration Blower Running (AUX) Discrete_Inputs_3.2
M-9-1 Aeration Blower In Service In_Out_Service_5.5
Alarm Reset Misc_Boolean_Tags_1.0
Aeration Blower Pressure Diff. Low Alarm (PDAL) PDSL-9-1 Alarm_Bits_5.4
TON
Timer On Delay
Timer Alarm_Timers_5[4]
Preset 10000
Accum 0
EN
DN
Alarm_Timers_5[4].DN
Aeration Blower Pressure Diff. Low Alarm (PDAL) PDSL-9-1 Alarm_Bits_5.4

121

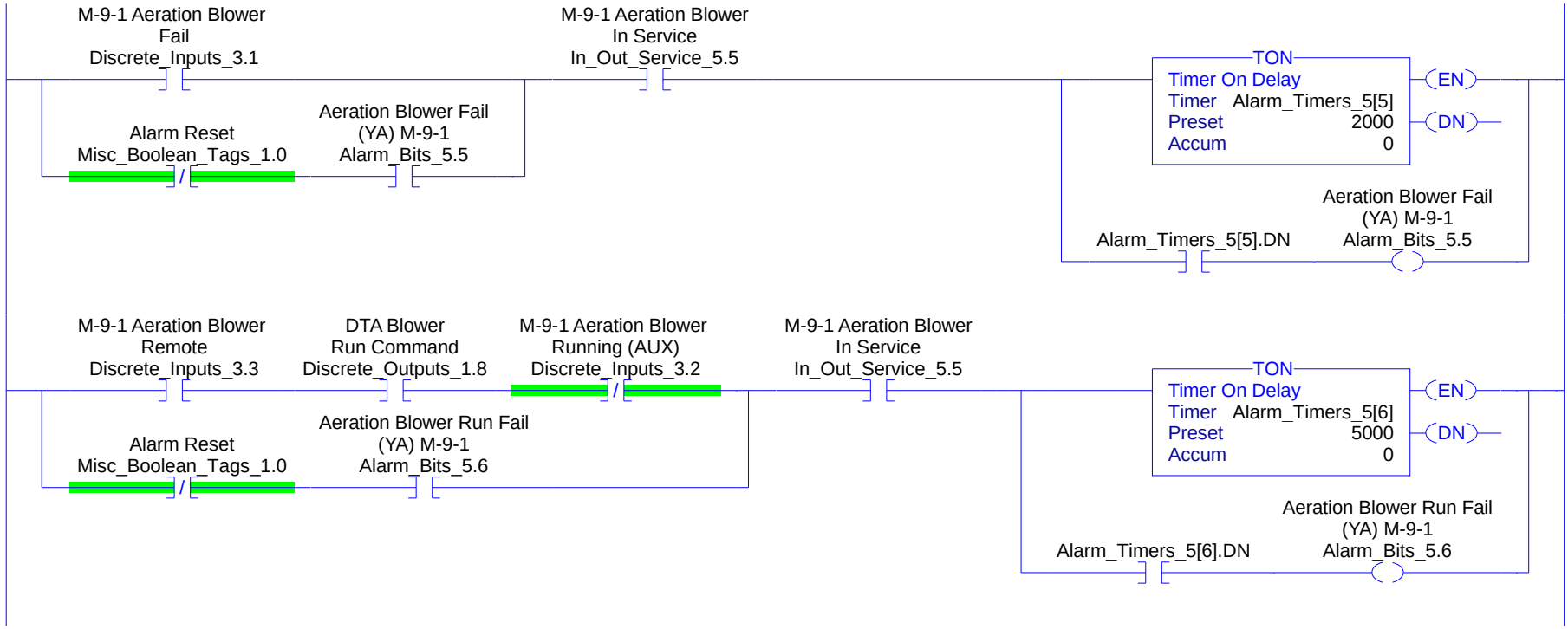
M-9-1 Aeration Blower Fail
Discrete_Inputs_3.1
M-9-1 Aeration Blower In Service
In_Out_Service_5.5
TON
Timer On Delay
Timer Alarm_Timers_5[5]
Preset 2000
Accum 0
EN
DN
Alarm Reset
Misc_Boolean_Tags_1.0
Aeration Blower Fail (YA) M-9-1
Alarm_Bits_5.5
Alarm_Timers_5[5].DN
Aeration Blower Fail (YA) M-9-1
Alarm_Bits_5.5

122

M-9-1 Aeration Blower Remote
Discrete_Inputs_3.3
DTA Blower Run Command
Discrete_Outputs_1.8
M-9-1 Aeration Blower Running (AUX)
Discrete_Inputs_3.2
M-9-1 Aeration Blower In Service
In_Out_Service_5.5
TON
Timer On Delay
Timer Alarm_Timers_5[6]
Preset 5000
Accum 0
EN
DN
Alarm Reset
Misc_Boolean_Tags_1.0
Aeration Blower Run Fail (YA) M-9-1
Alarm_Bits_5.6
Alarm_Timers_5[6].DN
Aeration Blower Run Fail (YA) M-9-1
Alarm_Bits_5.6

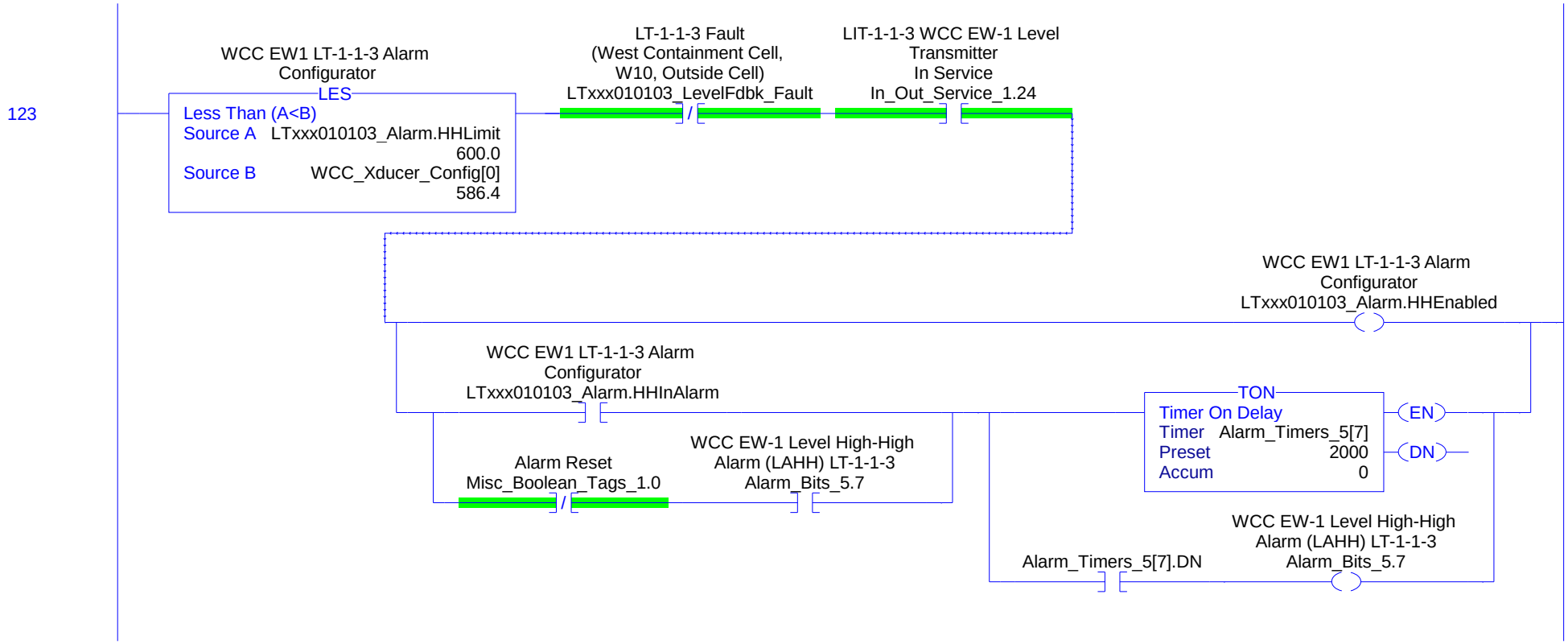
123
WCC EW1 LT-1-1-3 Alarm Configurator
LES
Less Than (A<B)
Source A LTxxx010103_Alarm.HHLimit
600.0
Source B WCC_Xducer_Config[0]
586.4
LT-1-1-3 Fault (West Containment Cell, W10, Outside Cell) LTxxx010103_LevelFdbk_Fault
LIT-1-1-3 WCC EW-1 Level Transmitter In Service In_Out_Service_1.24
WCC EW1 LT-1-1-3 Alarm Configurator LTxxx010103_Alarm.HHEnabled
WCC EW1 LT-1-1-3 Alarm Configurator LTxxx010103_Alarm.HHInAlarm
Alarm Reset Misc_Boolean_Tags_1.0
WCC EW-1 Level High-High Alarm (LAHH) LT-1-1-3 Alarm_Bits_5.7
TON
Timer On Delay
Timer Alarm_Timers_5[7]
Preset 2000
Accum 0
EN
DN
Alarm_Timers_5[7].DN
WCC EW-1 Level High-High Alarm (LAHH) LT-1-1-3 Alarm_Bits_5.7

124

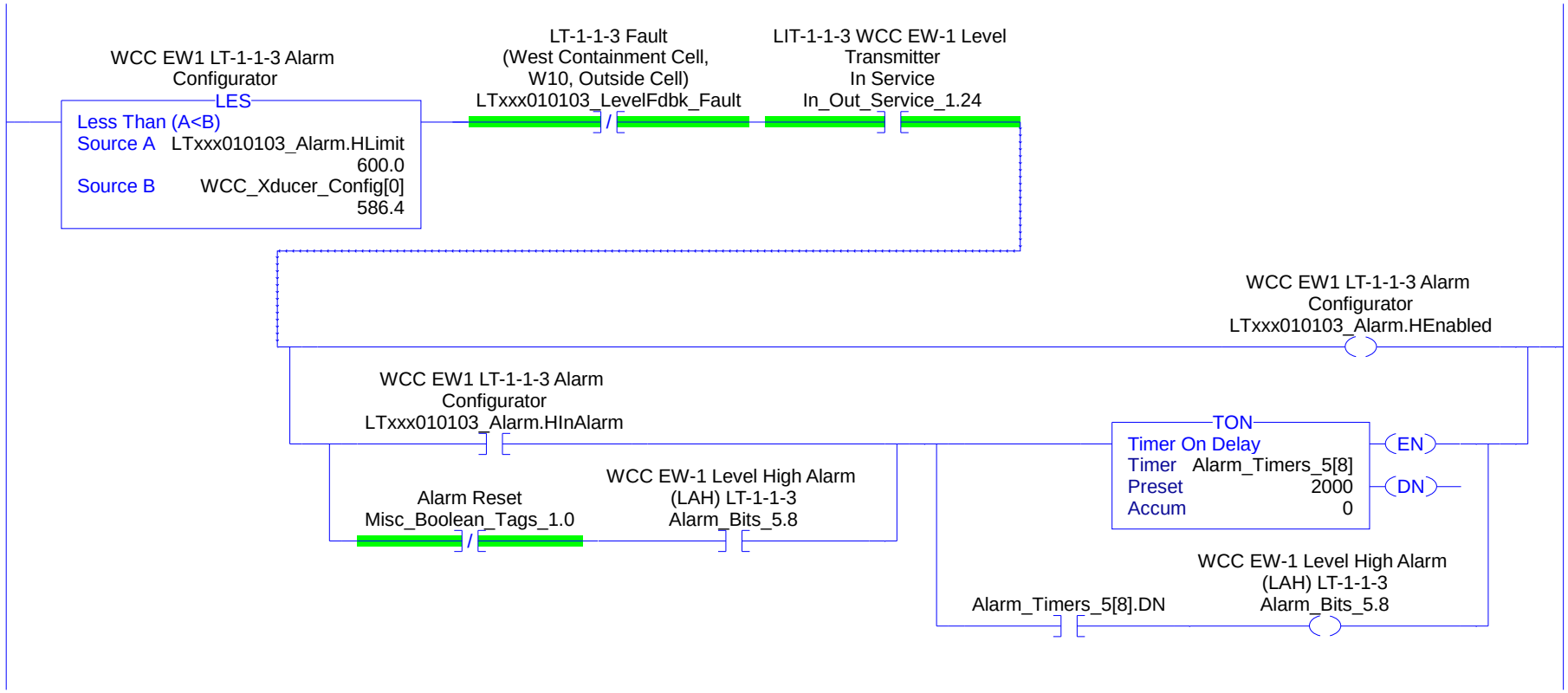
WCC EW1 LT-1-1-3 Alarm Configurator
LES
Less Than (A<B)
Source A LTxxx010103_Alarm.HLimit
600.0
Source B WCC_Xducer_Config[0]
586.4
LT-1-1-3 Fault (West Containment Cell, W10, Outside Cell) LTxxx010103_LevelFdbk_Fault
LIT-1-1-3 WCC EW-1 Level Transmitter In Service In_Out_Service_1.24
WCC EW1 LT-1-1-3 Alarm Configurator LTxxx010103_Alarm.HEnabled
WCC EW1 LT-1-1-3 Alarm Configurator LTxxx010103_Alarm.HInAlarm
Alarm Reset Misc_Boolean_Tags_1.0
WCC EW-1 Level High Alarm (LAH) LT-1-1-3 Alarm_Bits_5.8
TON
Timer On Delay
Timer Alarm_Timers_5[8]
Preset 2000
Accum 0
EN
DN
Alarm_Timers_5[8].DN
WCC EW-1 Level High Alarm (LAH) LT-1-1-3 Alarm_Bits_5.8

125

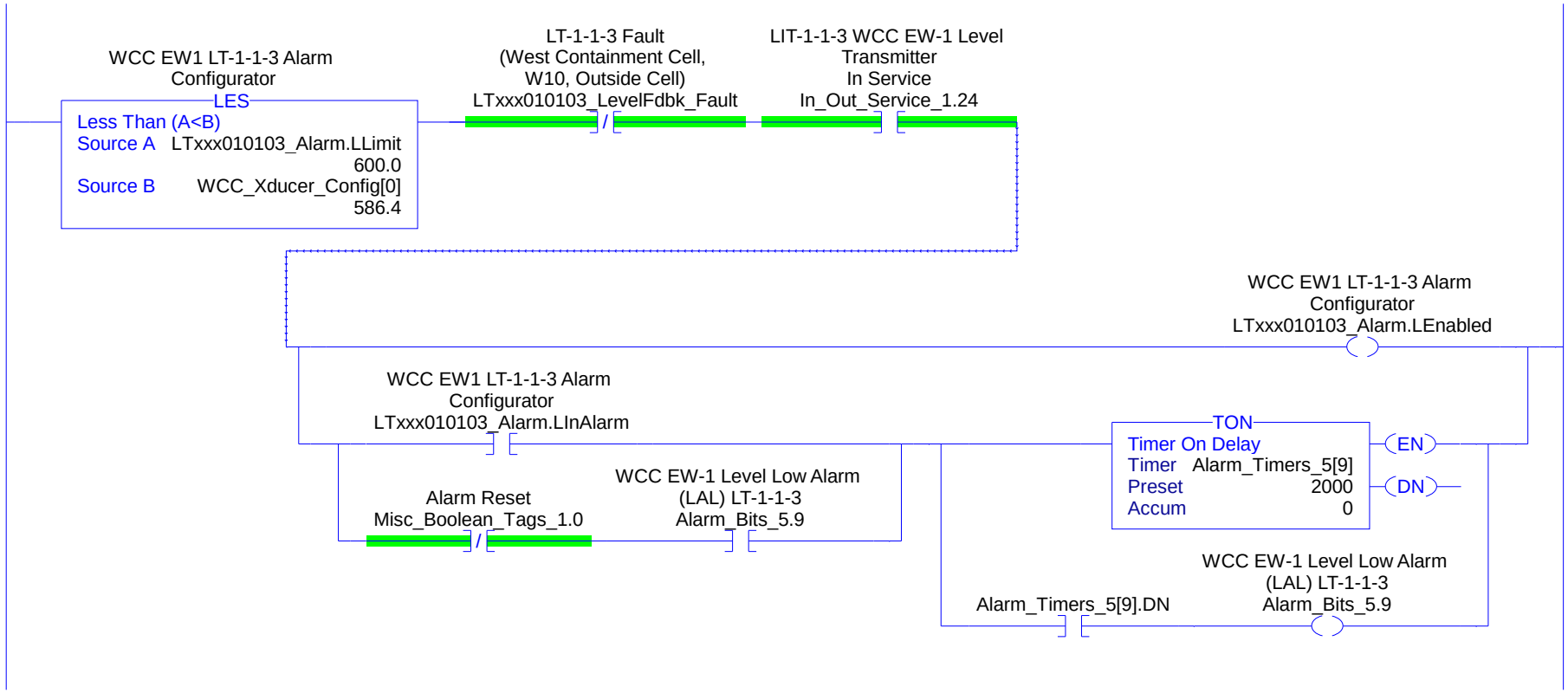
WCC EW1 LT-1-1-3 Alarm Configurator
LES
Less Than (A<B)
Source A LTxxx010103_Alarm.LLimit 600.0
Source B WCC_Xducer_Config[0] 586.4
LT-1-1-3 Fault (West Containment Cell, W10, Outside Cell) LTxxx010103_LevelFdbk_Fault
LIT-1-1-3 WCC EW-1 Level Transmitter In Service In_Out_Service_1.24
WCC EW1 LT-1-1-3 Alarm Configurator LTxxx010103_Alarm.LEnabled
WCC EW1 LT-1-1-3 Alarm Configurator LTxxx010103_Alarm.LInAlarm
Alarm Reset Misc_Boolean_Tags_1.0
WCC EW-1 Level Low Alarm (LAL) LT-1-1-3 Alarm_Bits_5.9
TON
Timer On Delay
Timer Alarm_Timers_5[9]
Preset 2000
Accum 0
EN
DN
Alarm_Timers_5[9].DN
WCC EW-1 Level Low Alarm (LAL) LT-1-1-3 Alarm_Bits_5.9

126

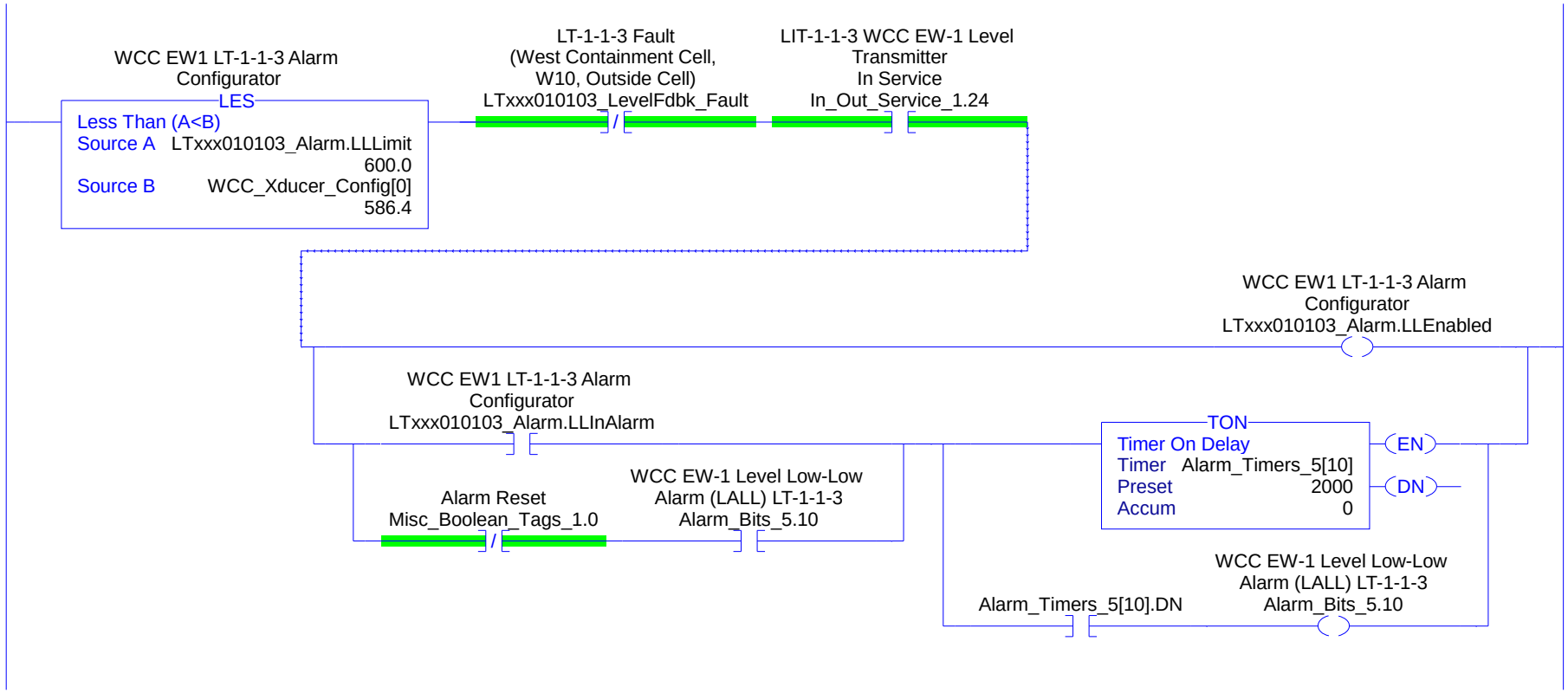
WCC EW1 LT-1-1-3 Alarm Configurator
LES
Less Than (A<B)
Source A LTxxx010103_Alarm.LLLimit
600.0
Source B WCC_Xducer_Config[0]
586.4
LT-1-1-3 Fault (West Containment Cell, W10, Outside Cell) LTxxx010103_LevelFdbk_Fault
LIT-1-1-3 WCC EW-1 Level Transmitter In Service In_Out_Service_1.24
WCC EW1 LT-1-1-3 Alarm Configurator LTxxx010103_Alarm.LLEnabled
WCC EW1 LT-1-1-3 Alarm Configurator LTxxx010103_Alarm.LLInAlarm
Alarm Reset Misc_Boolean_Tags_1.0
WCC EW-1 Level Low-Low Alarm (LALL) LT-1-1-3 Alarm_Bits_5.10
TON
Timer On Delay
Timer Alarm_Timers_5[10]
Preset 2000
Accum 0
EN
DN
Alarm_Timers_5[10].DN
WCC EW-1 Level Low-Low Alarm (LALL) LT-1-1-3 Alarm_Bits_5.10

127

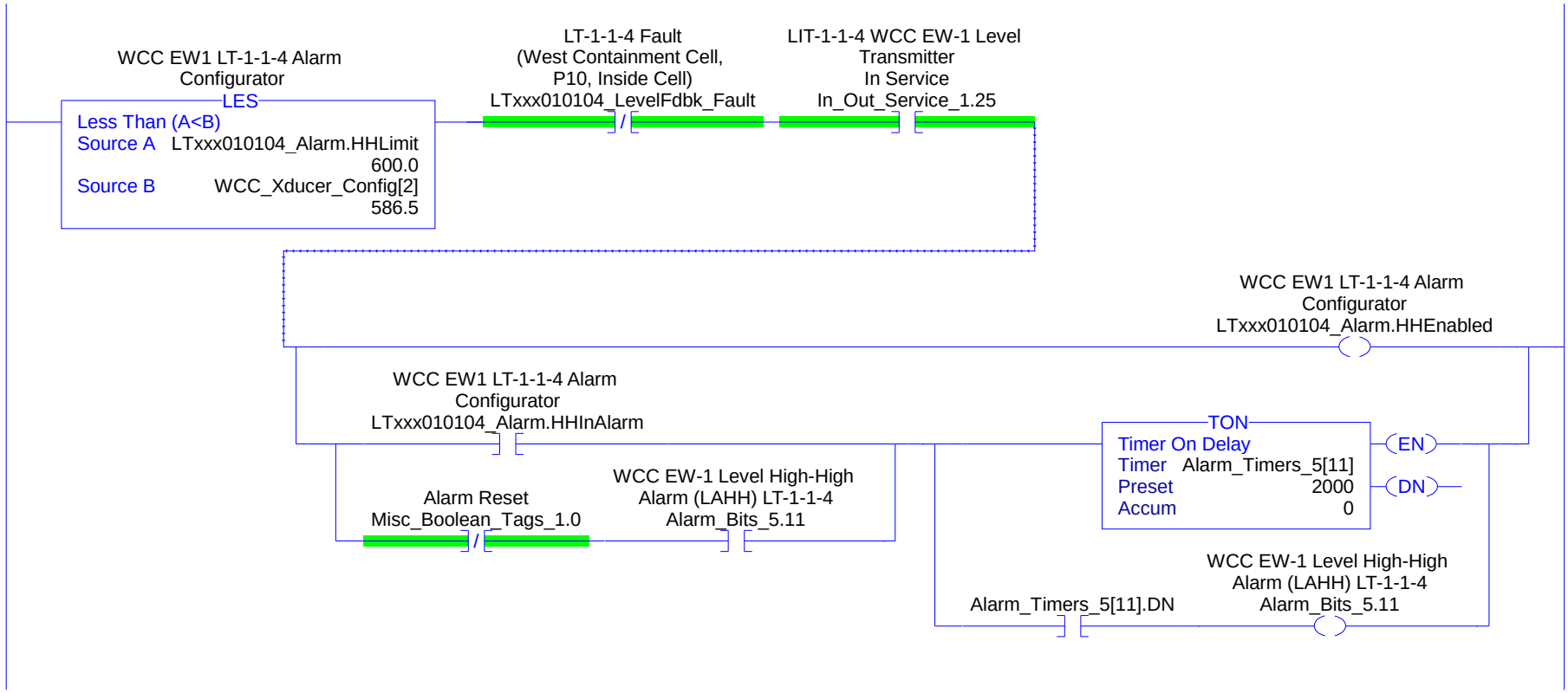
WCC EW1 LT-1-1-4 Alarm Configurator
LES
Less Than (A<B)
Source A LTxxx010104_Alarm.HHLimit
600.0
Source B WCC_Xducer_Config[2]
586.5
LT-1-1-4 Fault (West Containment Cell, P10, Inside Cell) LTxxx010104_LevelFdbk_Fault
LIT-1-1-4 WCC EW-1 Level Transmitter In Service In_Out_Service_1.25
WCC EW1 LT-1-1-4 Alarm Configurator LTxxx010104_Alarm.HHEnabled
WCC EW1 LT-1-1-4 Alarm Configurator LTxxx010104_Alarm.HHInAlarm
Alarm Reset Misc_Boolean_Tags_1.0
WCC EW-1 Level High-High Alarm (LAHH) LT-1-1-4 Alarm_Bits_5.11
TON
Timer On Delay
Timer Alarm_Timers_5[11]
Preset 2000
Accum 0
EN
DN
Alarm_Timers_5[11].DN
WCC EW-1 Level High-High Alarm (LAHH) LT-1-1-4 Alarm_Bits_5.11

128

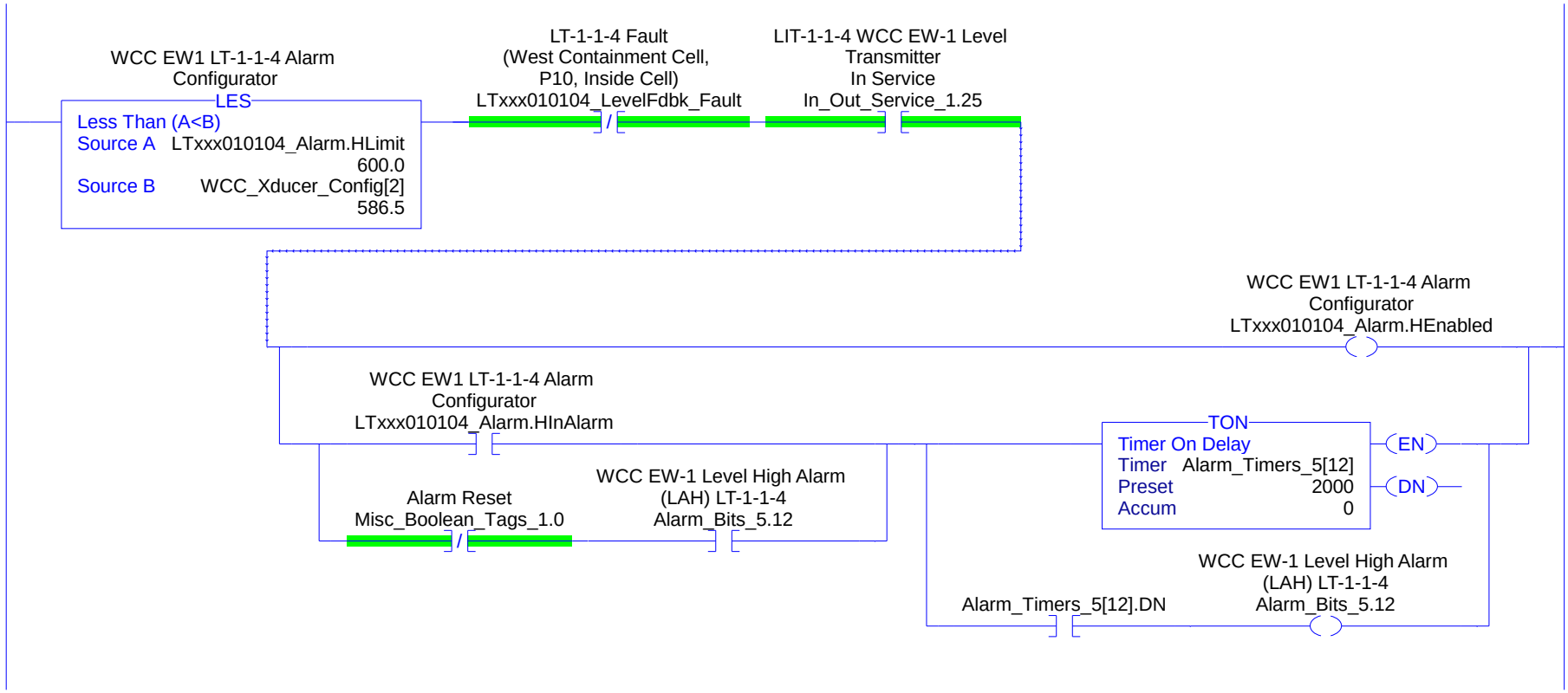
WCC EW1 LT-1-1-4 Alarm Configurator
LES
Less Than (A<B)
Source A LTxxx010104_Alarm.HLimit 600.0
Source B WCC_Xducer_Config[2] 586.5
LT-1-1-4 Fault (West Containment Cell, P10, Inside Cell) LTxxx010104_LevelFdbk_Fault
LIT-1-1-4 WCC EW-1 Level Transmitter In Service In_Out_Service_1.25
WCC EW1 LT-1-1-4 Alarm Configurator LTxxx010104_Alarm.HEnabled
WCC EW1 LT-1-1-4 Alarm Configurator LTxxx010104_Alarm.HInAlarm
Alarm Reset Misc_Boolean_Tags_1.0
WCC EW-1 Level High Alarm (LAH) LT-1-1-4 Alarm_Bits_5.12
TON
Timer On Delay
Timer Alarm_Timers_5[12]
Preset 2000
Accum 0
EN
DN
Alarm_Timers_5[12].DN
WCC EW-1 Level High Alarm (LAH) LT-1-1-4 Alarm_Bits_5.12

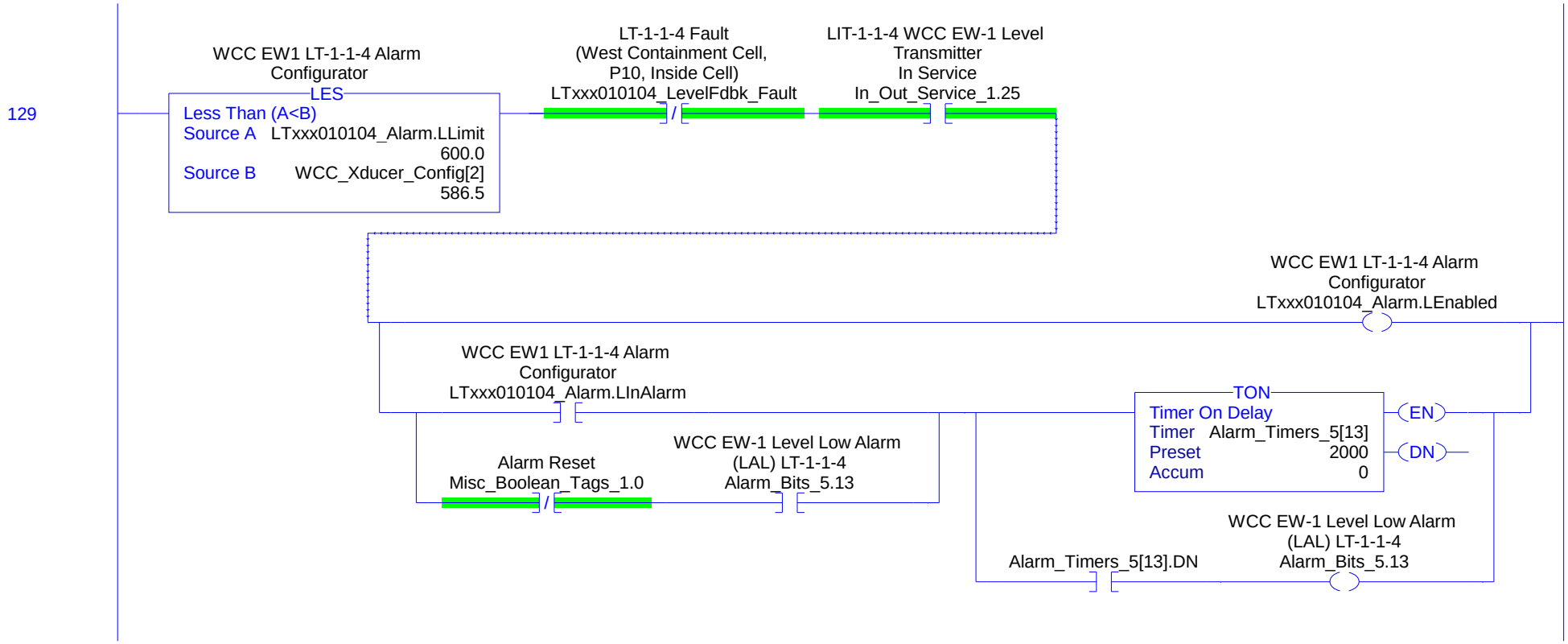
129
WCC EW1 LT-1-1-4 Alarm Configurator
LES
Less Than (A<B)
Source A LTxxx010104_Alarm.LLimit 600.0
Source B WCC_Xducer_Config[2] 586.5
LT-1-1-4 Fault (West Containment Cell, P10, Inside Cell) LTxxx010104_LevelFdbk_Fault
LIT-1-1-4 WCC EW-1 Level Transmitter In Service In_Out_Service_1.25
WCC EW1 LT-1-1-4 Alarm Configurator LTxxx010104_Alarm.LEnabled
WCC EW1 LT-1-1-4 Alarm Configurator LTxxx010104_Alarm.LInAlarm
Alarm Reset Misc_Boolean_Tags_1.0
WCC EW-1 Level Low Alarm (LAL) LT-1-1-4 Alarm_Bits_5.13
TON
Timer On Delay
Timer Alarm_Timers_5[13]
Preset 2000
Accum 0
EN
DN
Alarm_Timers_5[13].DN
WCC EW-1 Level Low Alarm (LAL) LT-1-1-4 Alarm_Bits_5.13

130

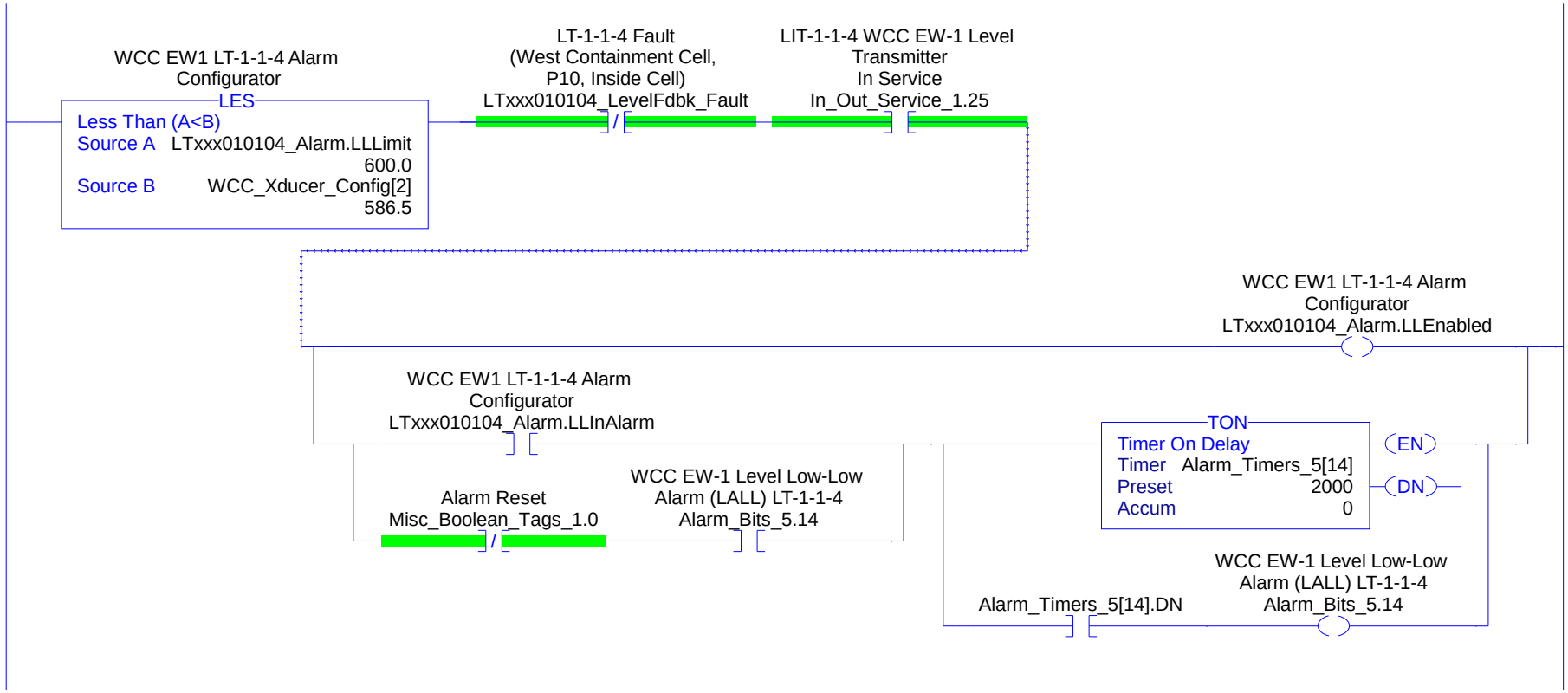
WCC EW1 LT-1-1-4 Alarm Configurator
LES
Less Than (A<B)
Source A LTxxx010104_Alarm.LLLimit
600.0
Source B WCC_Xducer_Config[2]
586.5
LT-1-1-4 Fault (West Containment Cell, P10, Inside Cell) LTxxx010104_LevelFdbk_Fault
LIT-1-1-4 WCC EW-1 Level Transmitter In Service In_Out_Service_1.25
WCC EW1 LT-1-1-4 Alarm Configurator LTxxx010104_Alarm.LLEnabled
WCC EW1 LT-1-1-4 Alarm Configurator LTxxx010104_Alarm.LLInAlarm
Alarm Reset Misc_Boolean_Tags_1.0
WCC EW-1 Level Low-Low Alarm (LALL) LT-1-1-4 Alarm_Bits_5.14
TON
Timer On Delay
Timer Alarm_Timers_5[14]
Preset 2000
Accum 0
EN
DN
Alarm_Timers_5[14].DN
WCC EW-1 Level Low-Low Alarm (LALL) LT-1-1-4 Alarm_Bits_5.14

131

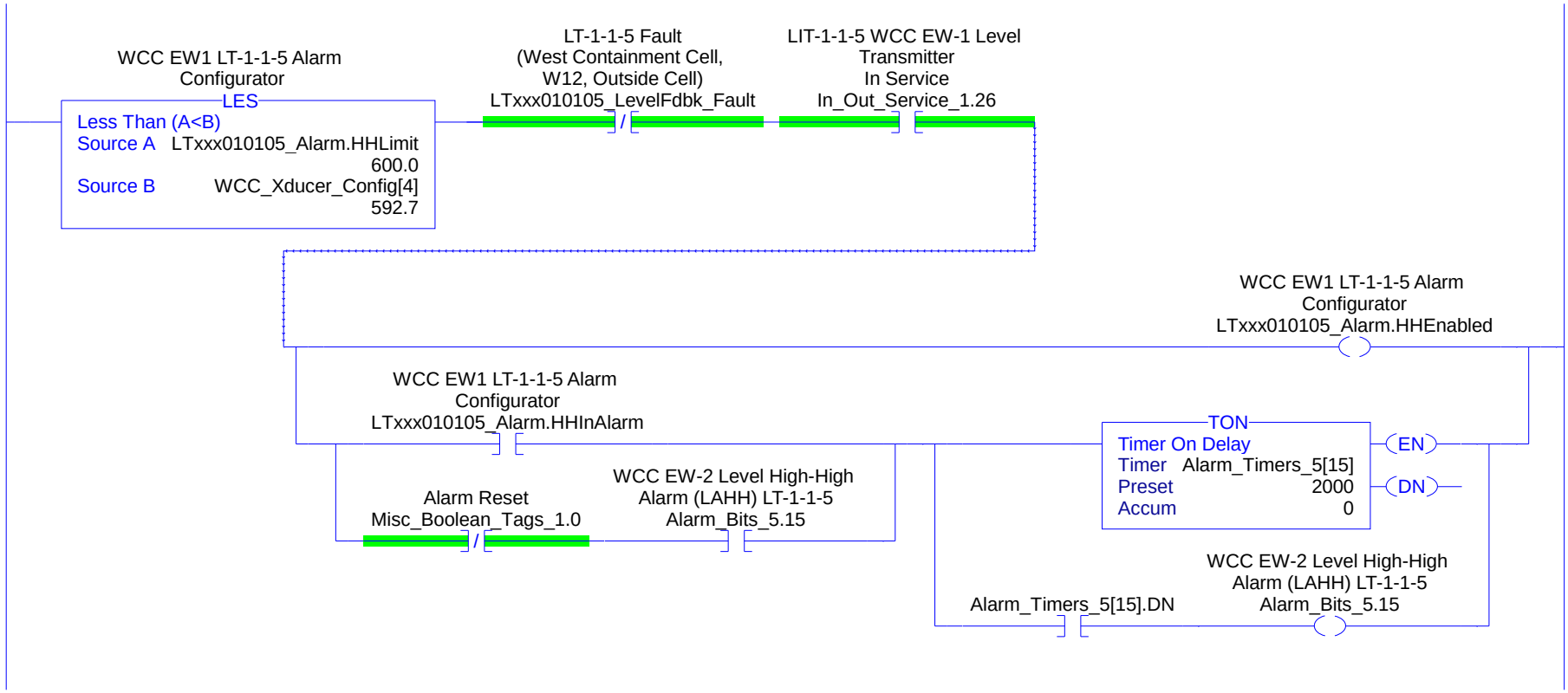
WCC EW1 LT-1-1-5 Alarm Configurator
LES
Less Than (A<B)
Source A LTxxx010105_Alarm.HHLimit
600.0
Source B WCC_Xducer_Config[4]
592.7
LT-1-1-5 Fault (West Containment Cell, W12, Outside Cell) LTxxx010105_LevelFdbk_Fault
LIT-1-1-5 WCC EW-1 Level Transmitter In Service In_Out_Service_1.26
WCC EW1 LT-1-1-5 Alarm Configurator LTxxx010105_Alarm.HHEnabled
WCC EW1 LT-1-1-5 Alarm Configurator LTxxx010105_Alarm.HHInAlarm
Alarm Reset Misc_Boolean_Tags_1.0
WCC EW-2 Level High-High Alarm (LAHH) LT-1-1-5 Alarm_Bits_5.15
TON
Timer On Delay
Timer Alarm_Timers_5[15]
Preset 2000
Accum 0
EN
DN
Alarm_Timers_5[15].DN
WCC EW-2 Level High-High Alarm (LAHH) LT-1-1-5 Alarm_Bits_5.15

132

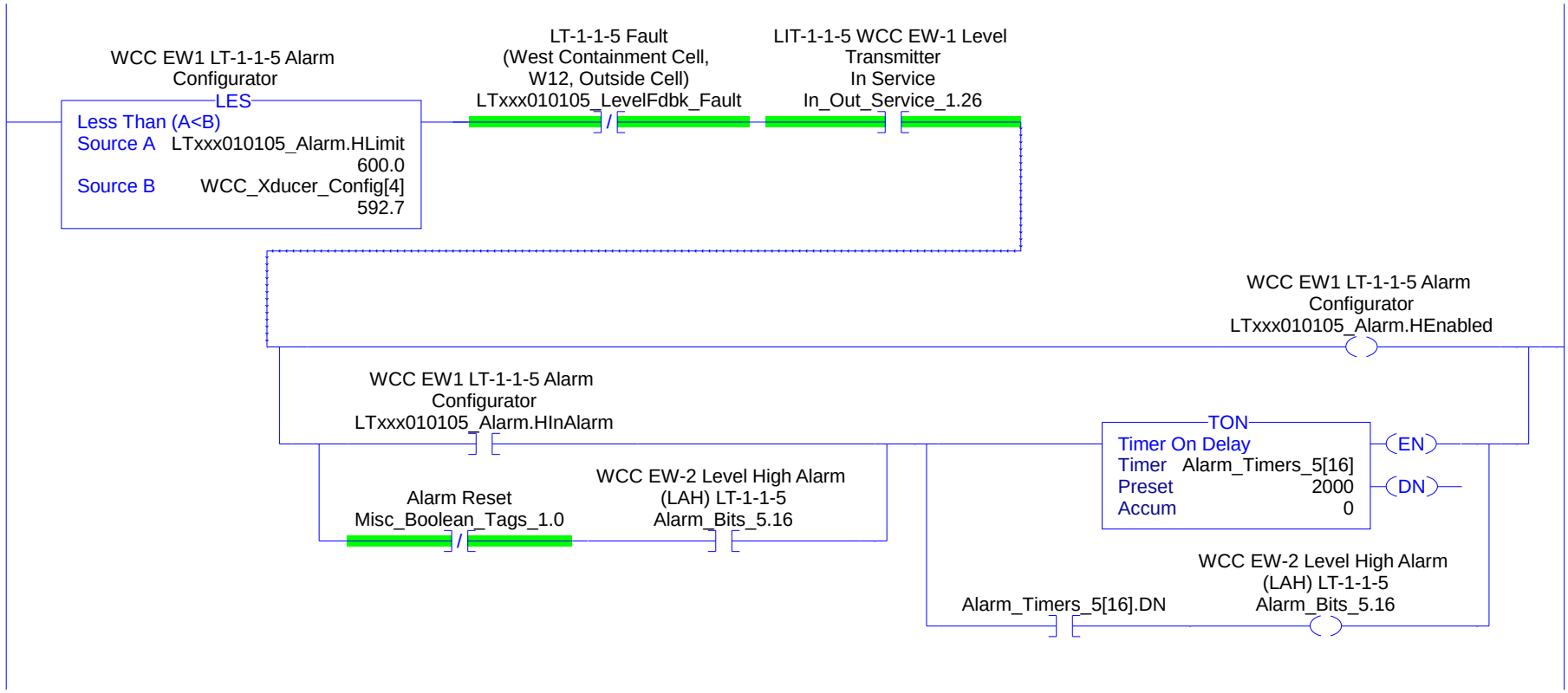
WCC EW1 LT-1-1-5 Alarm Configurator
LES
Less Than (A<B)
Source A LTxxx010105_Alarm.HLimit
600.0
Source B WCC_Xducer_Config[4]
592.7
LT-1-1-5 Fault (West Containment Cell, W12, Outside Cell) LTxxx010105_LevelFdbk_Fault
LIT-1-1-5 WCC EW-1 Level Transmitter In Service In_Out_Service_1.26
WCC EW1 LT-1-1-5 Alarm Configurator LTxxx010105_Alarm.HEnabled
WCC EW1 LT-1-1-5 Alarm Configurator LTxxx010105_Alarm.HInAlarm
Alarm Reset Misc_Boolean_Tags_1.0
WCC EW-2 Level High Alarm (LAH) LT-1-1-5 Alarm_Bits_5.16
TON
Timer On Delay
Timer Alarm_Timers_5[16]
Preset 2000
Accum 0
EN
DN
Alarm_Timers_5[16].DN
WCC EW-2 Level High Alarm (LAH) LT-1-1-5 Alarm_Bits_5.16

133

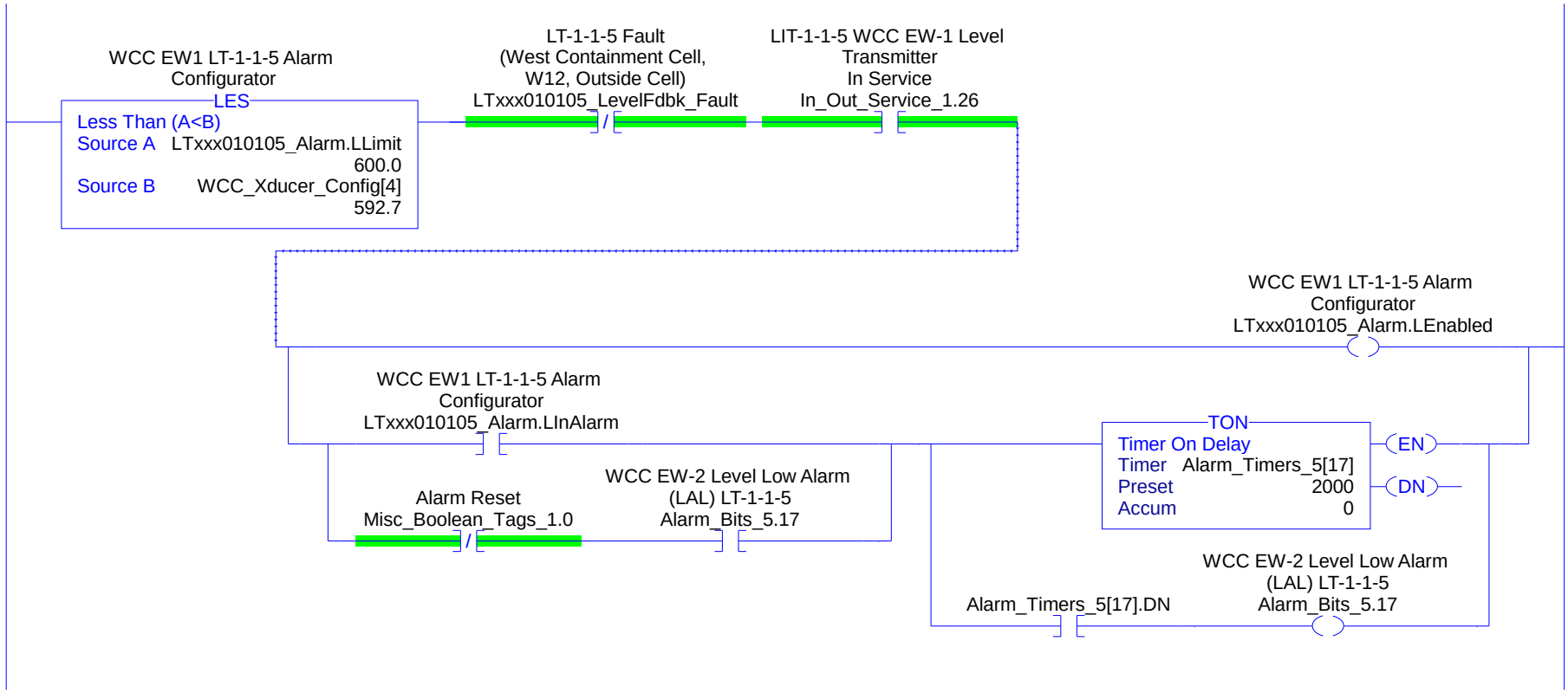
WCC EW1 LT-1-1-5 Alarm Configurator
LES
Less Than (A<B)
Source A LTxxx010105_Alarm.LLimit
600.0
Source B WCC_Xducer_Config[4]
592.7
LT-1-1-5 Fault (West Containment Cell, W12, Outside Cell) LTxxx010105_LevelFdbk_Fault
LIT-1-1-5 WCC EW-1 Level Transmitter In Service In_Out_Service_1.26
WCC EW1 LT-1-1-5 Alarm Configurator LTxxx010105_Alarm.LEnabled
WCC EW1 LT-1-1-5 Alarm Configurator LTxxx010105_Alarm.LInAlarm
Alarm Reset Misc_Boolean_Tags_1.0
WCC EW-2 Level Low Alarm (LAL) LT-1-1-5 Alarm_Bits_5.17
TON
Timer On Delay
Timer Alarm_Timers_5[17]
Preset 2000
Accum 0
EN
DN
Alarm_Timers_5[17].DN
WCC EW-2 Level Low Alarm (LAL) LT-1-1-5 Alarm_Bits_5.17

134

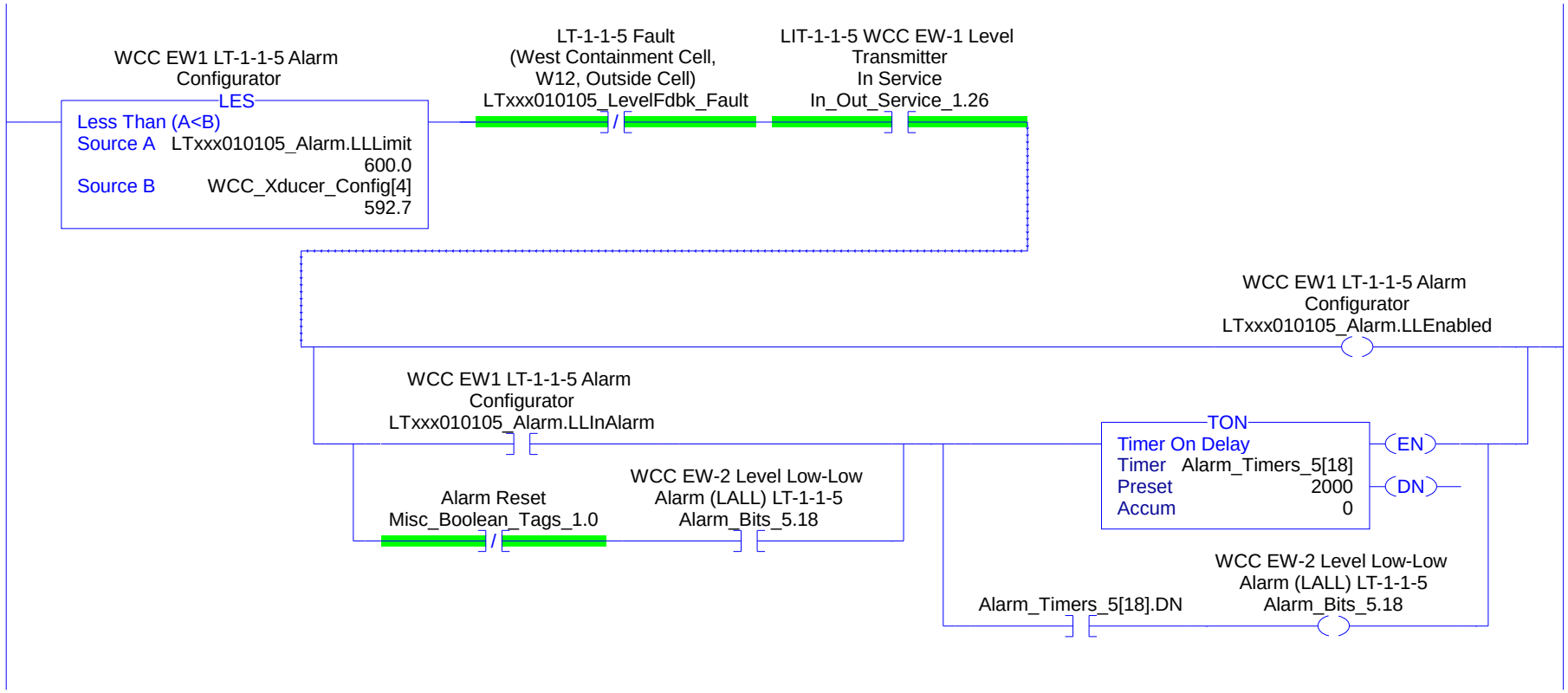
WCC EW1 LT-1-1-5 Alarm Configurator
LES
Less Than (A<B)
Source A LTxxx010105_Alarm.LLLimit
600.0
Source B WCC_Xducer_Config[4]
592.7
LT-1-1-5 Fault (West Containment Cell, W12, Outside Cell) LTxxx010105_LevelFdbk_Fault
LIT-1-1-5 WCC EW-1 Level Transmitter In Service In_Out_Service_1.26
WCC EW1 LT-1-1-5 Alarm Configurator LTxxx010105_Alarm.LLEnabled
WCC EW1 LT-1-1-5 Alarm Configurator LTxxx010105_Alarm.LLInAlarm
Alarm Reset Misc_Boolean_Tags_1.0
WCC EW-2 Level Low-Low Alarm (LALL) LT-1-1-5 Alarm_Bits_5.18
TON
Timer On Delay
Timer Alarm_Timers_5[18]
Preset 2000
Accum 0
EN
DN
Alarm_Timers_5[18].DN
WCC EW-2 Level Low-Low Alarm (LALL) LT-1-1-5 Alarm_Bits_5.18

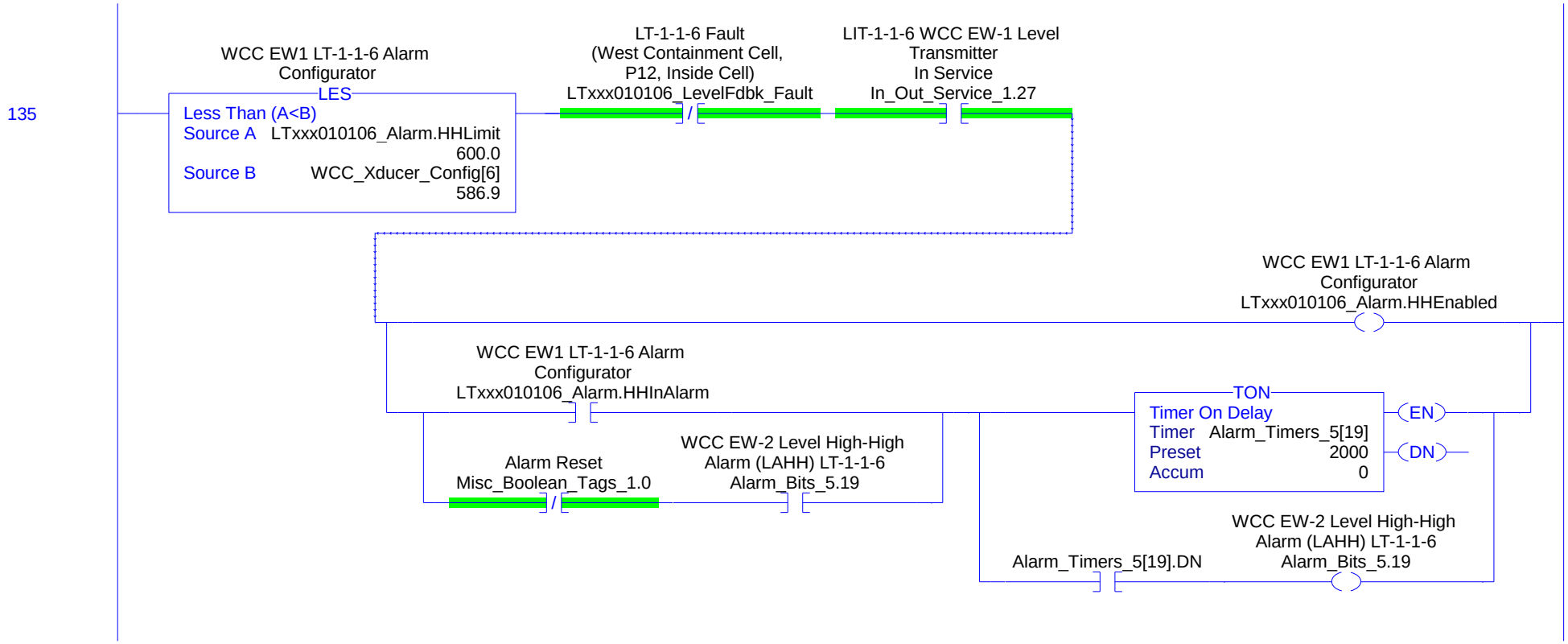
135
WCC EW1 LT-1-1-6 Alarm Configurator
LES
Less Than (A<B)
Source A LTxxx010106_Alarm.HHLimit
600.0
Source B WCC_Xducer_Config[6]
586.9
LT-1-1-6 Fault (West Containment Cell, P12, Inside Cell)
LTxxx010106_LevelFdbk_Fault
LIT-1-1-6 WCC EW-1 Level Transmitter In Service
In_Out_Service_1.27
WCC EW1 LT-1-1-6 Alarm Configurator
LTxxx010106_Alarm.HHEnabled
WCC EW1 LT-1-1-6 Alarm Configurator
LTxxx010106_Alarm.HHInAlarm
Alarm Reset
Misc_Boolean_Tags_1.0
WCC EW-2 Level High-High Alarm (LAHH) LT-1-1-6
Alarm_Bits_5.19
TON
Timer On Delay
Timer Alarm_Timers_5[19]
Preset 2000
Accum 0
EN
DN
Alarm_Timers_5[19].DN
WCC EW-2 Level High-High Alarm (LAHH) LT-1-1-6
Alarm_Bits_5.19

136

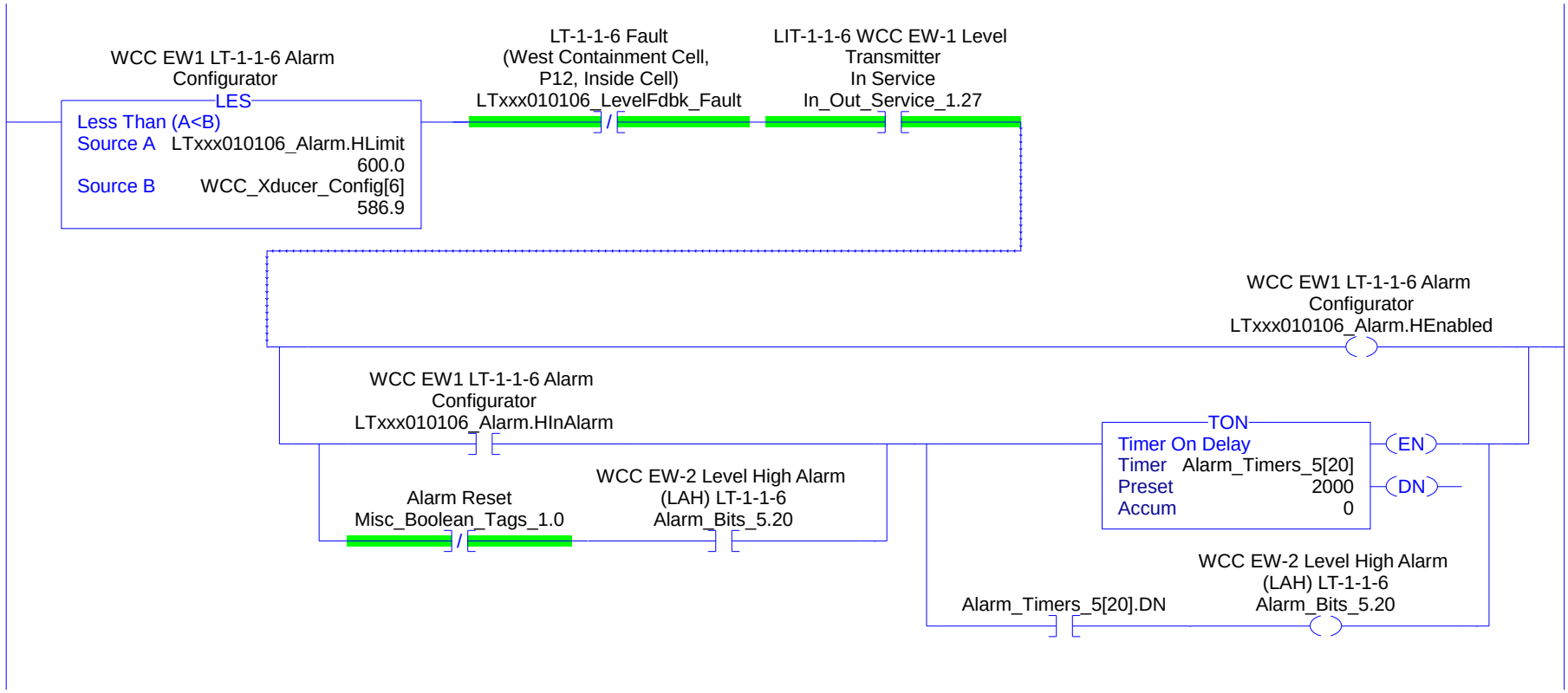
WCC EW1 LT-1-1-6 Alarm Configurator
LES
Less Than (A<B)
Source A LTxxx010106_Alarm.HLimit 600.0
Source B WCC_Xducer_Config[6] 586.9
LT-1-1-6 Fault (West Containment Cell, P12, Inside Cell) LTxxx010106_LevelFdbk_Fault
LIT-1-1-6 WCC EW-1 Level Transmitter In Service In_Out_Service_1.27
WCC EW1 LT-1-1-6 Alarm Configurator LTxxx010106_Alarm.HEnabled
WCC EW1 LT-1-1-6 Alarm Configurator LTxxx010106_Alarm.HInAlarm
Alarm Reset Misc_Boolean_Tags_1.0
WCC EW-2 Level High Alarm (LAH) LT-1-1-6 Alarm_Bits_5.20
TON
Timer On Delay
Timer Alarm_Timers_5[20]
Preset 2000
Accum 0
EN
DN
Alarm_Timers_5[20].DN
WCC EW-2 Level High Alarm (LAH) LT-1-1-6 Alarm_Bits_5.20

137

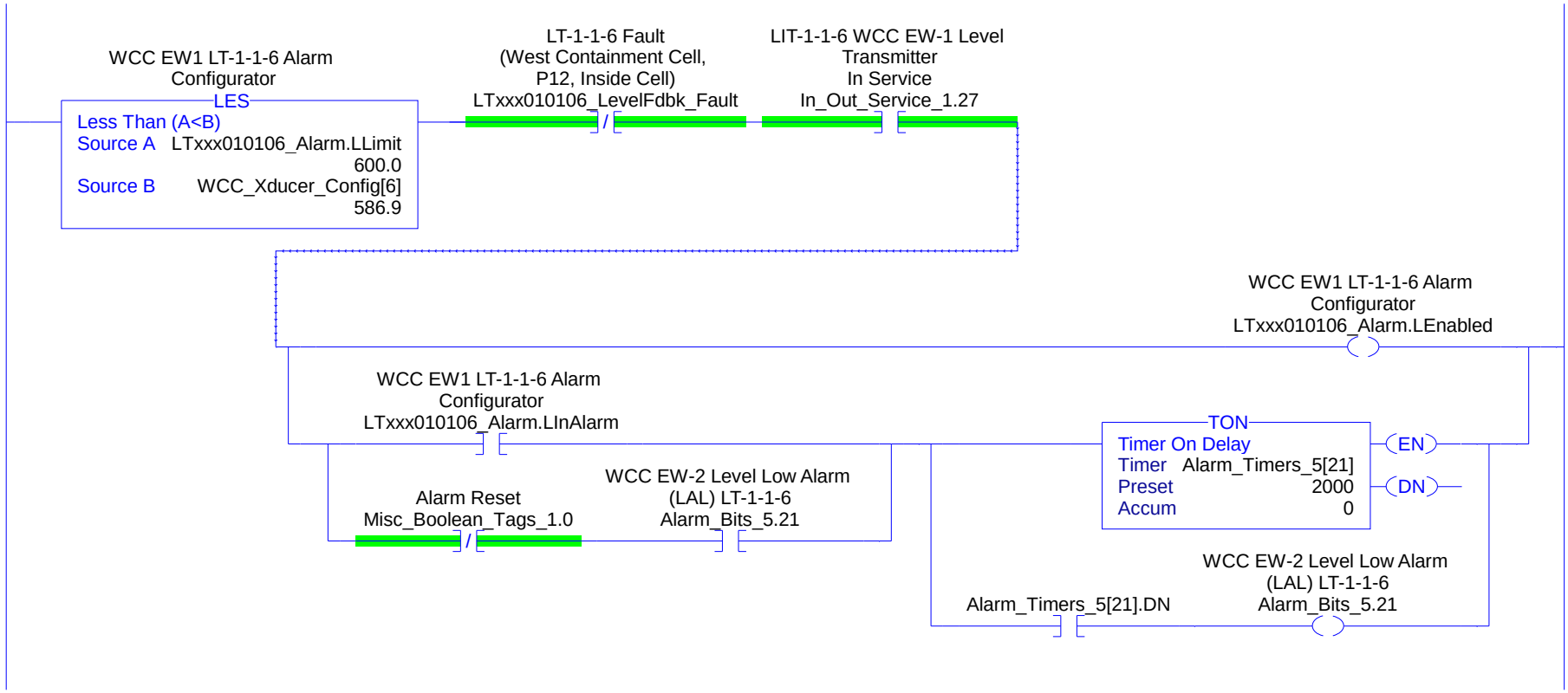
WCC EW1 LT-1-1-6 Alarm Configurator
LES
Less Than (A<B)
Source A LTxxx010106_Alarm.LLimit 600.0
Source B WCC_Xducer_Config[6] 586.9
LT-1-1-6 Fault (West Containment Cell, P12, Inside Cell) LTxxx010106_LevelFdbk_Fault
LIT-1-1-6 WCC EW-1 Level Transmitter In Service In_Out_Service_1.27
WCC EW1 LT-1-1-6 Alarm Configurator LTxxx010106_Alarm.LEnabled
WCC EW1 LT-1-1-6 Alarm Configurator LTxxx010106_Alarm.LInAlarm
Alarm Reset Misc_Boolean_Tags_1.0
WCC EW-2 Level Low Alarm (LAL) LT-1-1-6 Alarm_Bits_5.21
TON
Timer On Delay
Timer Alarm_Timers_5[21]
Preset 2000
Accum 0
EN
DN
Alarm_Timers_5[21].DN
WCC EW-2 Level Low Alarm (LAL) LT-1-1-6 Alarm_Bits_5.21

138

WCC EW1 LT-1-1-6 Alarm Configurator
LES
Less Than (A<B)
Source A LTxxx010106_Alarm.LLLimit 600.0
Source B WCC_Xducer_Config[6] 586.9

LT-1-1-6 Fault (West Containment Cell, P12, Inside Cell) LTxxx010106_LevelFdbk_Fault

LIT-1-1-4 WCC EW-1 Level Transmitter In Service In_Out_Service_1.25

WCC EW1 LT-1-1-6 Alarm Configurator LTxxx010106_Alarm.LLEnabled

WCC EW1 LT-1-1-6 Alarm Configurator LTxxx010106_Alarm.LLInAlarm

Alarm Reset Misc_Boolean_Tags_1.0

WCC EW-2 Level Low-Low Alarm (LALL) LT-1-1-6 Alarm_Bits_5.22

TON
Timer On Delay
Timer Alarm_Timers_5[16]
Preset 2000
Accum 0
EN
DN

Alarm_Timers_5[16].DN

WCC EW-2 Level Low-Low Alarm (LALL) LT-1-1-6 Alarm_Bits_5.22

139

LSHH-2-1 Influent Tank Level High-High N.C. (Held Open) Discrete_Inputs_3.7

Alarm Reset Misc_Boolean_Tags_1.0

Influent Tank Level High-High Alarm (LAHH) LSHH-2-1 Alarm_Bits_5.23

TON
Timer On Delay
Timer Alarm_Timers_5[23]
Preset 2000
Accum 0
EN
DN

Alarm_Timers_5[23].DN

Influent Tank Level High-High Alarm (LAHH) LSHH-2-1 Alarm_Bits_5.23

140

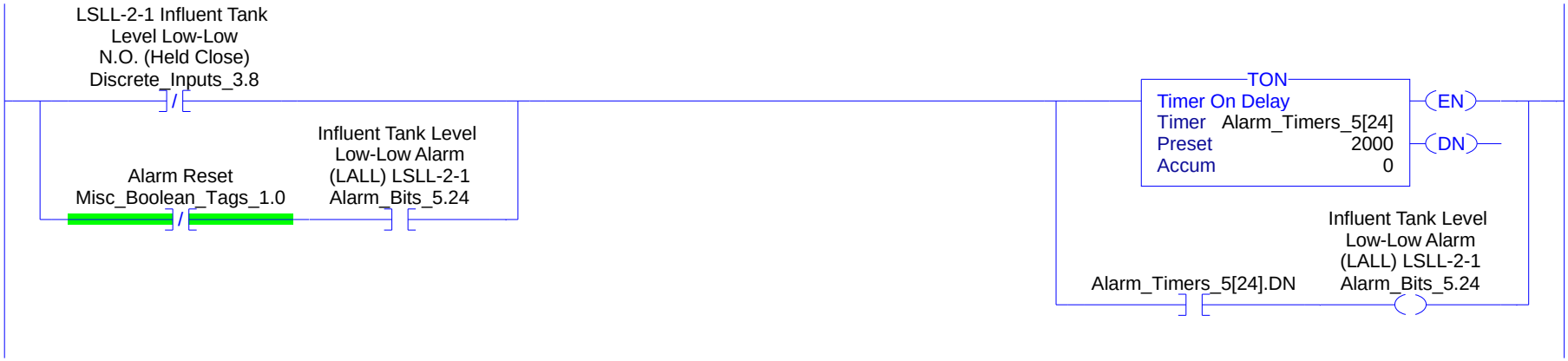
LSLL-2-1 Influent Tank
Level Low-Low
N.O. (Held Close)
Discrete_Inputs_3.8
Alarm Reset
Misc_Boolean_Tags_1.0
Influent Tank Level
Low-Low Alarm
(LALL) LSLL-2-1
Alarm_Bits_5.24
TON
Timer On Delay
Timer Alarm_Timers_5[24]
Preset 2000
Accum 0
EN
DN
Alarm_Timers_5[24].DN
Influent Tank Level
Low-Low Alarm
(LALL) LSLL-2-1
Alarm_Bits_5.24

141

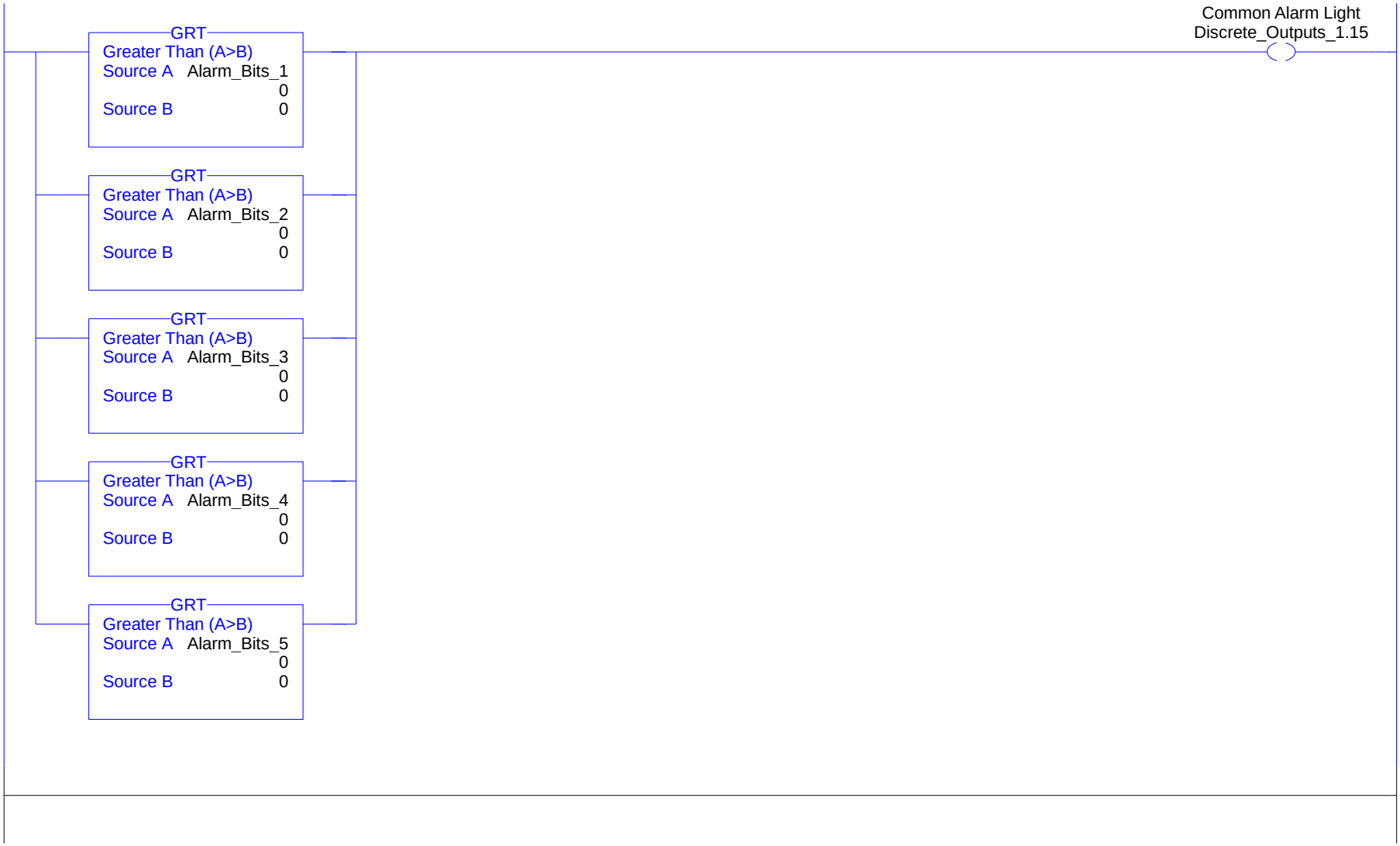
GRT
Greater Than (A>B)
Source A Alarm_Bits_1
0
Source B 0
GRT
Greater Than (A>B)
Source A Alarm_Bits_2
0
Source B 0
GRT
Greater Than (A>B)
Source A Alarm_Bits_3
0
Source B 0
GRT
Greater Than (A>B)
Source A Alarm_Bits_4
0
Source B 0
GRT
Greater Than (A>B)
Source A Alarm_Bits_5
0
Source B 0
Common Alarm Light
Discrete_Outputs_1.15

(End)

The next three rungs determine the positon of the switch on the front of the control panel
0 = "ON"
1 = "OFF"
2 = "REMOTE"

0

FCV-1-2 CF Flow Control Valve Remote Discrete_Inputs_2.4 [/]

FCV-1-2 CF Flow Control Valve Enabled Discrete_Inputs_2.11

CF Flow Control Valve OOR Switch 0 = On, 1 = Off, 2 = Remote

MOV
Move
Source 0
Dest CF_Valve_OOR_States 2

1

FCV-1-2 CF Flow Control Valve Remote Discrete_Inputs_2.4 [/]

FCV-1-2 CF Flow Control Valve Enabled Discrete_Inputs_2.11 [/]

CF Flow Control Valve OOR Switch 0 = On, 1 = Off, 2 = Remote

MOV
Move
Source 1
Dest CF_Valve_OOR_States 2

2

FCV-1-2 CF Flow Control Valve Remote Discrete_Inputs_2.4

CF Flow Control Valve OOR Switch 0 = On, 1 = Off, 2 = Remote

MOV
Move
Source 2
Dest CF_Valve_OOR_States 2

This rung enables the OIT manual start/stop buttons.

3

CF Flow Control Valve OOR Switch 0 = On, 1 = Off, 2 = Remote
EQU
Equal
Source A CF_Valve_OOR_States 2
Source B 2

CF Flow Control Valve Remote Mode Selector 0=Manual, 1=Auto Misc_Boolean_Tags_2.24 [/]

CF Flow Control Valve Enable Command Discrete_Outputs_1.5 [/] — CF Flow Control Valve Start Visible Misc_Boolean_Tags_3.12 ( )

CF Flow Control Valve Enable Command Discrete_Outputs_1.5 [ ] — CF Flow Control Valve Stop Visible Misc_Boolean_Tags_3.13 ( )

This rung activates the valve enable output.

4

CF Flow Control Valve OOR Switch 0 = On, 1 = Off, 2 = Remote
EQU
Equal
Source A CF_Valve_OOR_States 2
Source B 2

CF Flow Control Valve Remote Mode Selector 0=Manual, 1=Auto Misc_Boolean_Tags_2.24 [ ]

CF Flow Control Valve Remote Mode Selector 0=Manual, 1=Auto Misc_Boolean_Tags_2.24 [/]

CF Flow Control Valve Manual Start Misc_Boolean_Tags_2.25 [ ]

CF Flow Control Valve Manual Stop Misc_Boolean_Tags_2.26 [/] — CF Flow Control Valve Enable Command Discrete_Outputs_1.5 [ ]

CF Flow Control Valve Enable Command Discrete_Outputs_1.5 ( )

5

CF Flow Control Valve Loop Timer PID_Loop_Timers[2].DN [/]

CF Flow Control Valve Loop Timer
TON
Timer On Delay
Timer PID_Loop_Timers[2]
Preset 50
Accum 27
EN
DN

This rung disables the PID tieback mode.

6

Consolidation Sump Pump Flow Control Valve PID PID_FCV.MO
U

This rung switches the PID to manual mode.

7

CF Flow Control Valve OOR Switch 0 = On, 1 = Off, 2 = Remote
EQU
Equal
Source A CF_Valve_OOR_States 2
Source B 2

CF Flow Control Valve OOR Switch 0 = On, 1 = Off, 2 = Remote
EQU
Equal
Source A CF_Valve_OOR_States 2
Source B 0

CF Flow Control Valve Remote Mode Selector 0=Manual, 1=Auto
Misc_Boolean_Tags_2.24
/

Consolidation Sump Pump Flow Control Valve PID
PID_FCV.SWM

Consolidation Sump Pump Flow Control Valve PID
MOV
Move
Source Process_Setpoints[5] 100.0
Dest PID_FCV.SO 100.0

This rung calculates the available flow PID setpoint when the influent pump is not running or the effluent flow is greater than the maximum setpoint.

8

Consolidation Sump Pump Flow Control Valve PID
CPT
Compute
Dest PID_FCV.SP 42.0
Expression Process_Setpoints[6]-Analog_Inputs_Real_1[1]-Analog_Inputs_Real_1[3]-Analog_Inputs_Real_1[4]

This rung calculates the available flow PID setpoint when the influent pump is running or the effluent flow is less than the m

9

P-2-1 Influent Tank Pump Running (AUX) Discrete_Inputs_2.6

FIT-5-1 Treated Effluent Flow Transmitter Scaled Value [1x gpm]

LES
Less Than (A<B)
Source A Analog_Inputs_Real_1[5] 0.0
Source B Process_Setpoints[6] 42.0

FIT-5-1 Treated Effluent Flow Transmitter Scaled Value [1x gpm]

GRT
Greater Than (A>B)
Source A Analog_Inputs_Real_1[5] 0.0
Source B Process_Setpoints[9] 10.0

Cor
F

Compute
Dest
Expression Analog_Inputs_Real_1[5]-Analog_

FIT-5-1 Treated Effluent Flow Transmitter Scaled Value [1x gpm]

LES
Less Than (A<B)
Source A Analog_Inputs_Real_1[5] 0.0
Source B Process_Setpoints[9] 10.0

Cor
F

Compute
Dest
Expression Analog_Inputs_Real_1[5]-Analog_

ximum setpoint.

olidation Sump Pump
w Control Valve PID
CPT
PID_FCV.SP
42.0
nputs_Real_1[1]-Analog_Inputs_Real_1[3]-Analog_Inputs_Real_1[4]-1

olidation Sump Pump
w Control Valve PID
CPT
PID_FCV.SP
42.0
nputs_Real_1[1]-Analog_Inputs_Real_1[3]-Analog_Inputs_Real_1[4]-1

10

CF Sump Pump
Available Flow
MOV
Move
Source PID_FCV.SP
42.0
Dest Process_Setpoints[4]
42.0

This the PID Loop for the CF Valve

11

CF Flow Control Valve Loop Timer
PID_Loop_Timers[2].DN

CF Flow Control Valve OOR Switch 0 = On, 1 = Off, 2 = Remote

EQU
Equal
Source A CF_Valve_OOR_States
2
Source B 2

CF Flow Control Valve Remote Mode Selector 0=Manual, 1=Auto
Misc_Boolean_Tags_2.24

P-1-2 CF Sump Pump Running (AUX)
Discrete_Inputs_2.0

Consolidation Sump Pump Flow Control Valve PID

PID
Proportional Integral Derivative
PID PID_FCV ...
Process Variable Analog_Inputs_Real_1[2]
Tieback 0
Control Variable Analog_Outputs_Real_1[0]
PID Master Loop PID_FCV
Inhold Bit 0
Inhold Value 0
Setpoint 42.0
Process Variable 30.596182
Output % 100.0

This rung is for bumpless auto to manual manual valve command.

12

Consolidation Sump Pump Flow Control Valve PID
PID_FCV.SWM

CF Valve Open Position when in OOR is in ON Postion

MOV
Move
Source PID_FCV.SO
100.0
Dest Process_Setpoints[5]
100.0

13

This rung forces the CF valve to a manual position entered via the HMI if the three positon switch is in the "ON" position or in the "REMOTE" postion if the CF Pump is on and "AUTO/MANUAL" PB is in "MANUAL"

CF Flow Control Valve OOR Switch 0 = On, 1 = Off, 2 = Remote
EQU
Equal
Source A CF_Valve_OOR_States 2
Source B 2

CF Flow Control Valve Remote Mode Selector 0=Manual, 1=Auto
Misc_Boolean_Tags_2.24]/[

P-1-2 CF Sump Pump Running (AUX)
Discrete_Inputs_2.0]/[

FCVxx010200 - Consolidation Facility Flow Valve Position Command
MOV
Move
Source Process_Setpoints[5] 100.0
Dest Analog_Outputs_Real_1[0] 0.0

CF Flow Control Valve OOR Switch 0 = On, 1 = Off, 2 = Remote
EQU
Equal
Source A CF_Valve_OOR_States 2
Source B 0

14

This rung forces the CF valve closed if the three positon switch is in the "OFF" position or in the "REMOTE" postion if the CF Pump is off

CF Flow Control Valve OOR Switch 0 = On, 1 = Off, 2 = Remote
EQU
Equal
Source A CF_Valve_OOR_States 2
Source B 2

CF Flow Control Valve Remote Mode Selector 0=Manual, 1=Auto
Misc_Boolean_Tags_2.24]/[

P-1-2 CF Sump Pump Running (AUX)
Discrete_Inputs_2.0]/[

FCVxx010200 - Consolidation Facility Flow Valve Position Command
CLR
Clear
Dest Analog_Outputs_Real_1[0] 0.0

CF Flow Control Valve OOR Switch 0 = On, 1 = Off, 2 = Remote
EQU
Equal
Source A CF_Valve_OOR_States 2
Source B 1

This rung scales the chemical feed pump command to 4 mA to 20 mA.

15

CPT
Compute
Dest Local:11:O.Ch0Data
4.0
Expression Analog_Outputs_Real_1[0]*16.0/100.0+4.0

(End)

The next three rungs determine the positon of the switch on the front of the control panel
0 = "ON"
1 = "OFF"
2 = "REMOTE"

0

P-1-2 CF Sump Pump Remote
Discrete_Inputs_2.1

P-1-2 CF Sump Pump Running (AUX)
Discrete_Inputs_2.0

CF Sump Pump OOR Switch
0 = On, 1 = Off, 2 = Remote

MOV
Move
Source 0
Dest CF_SUMP_OOR_States[1]

1

P-1-2 CF Sump Pump Remote
Discrete_Inputs_2.1

P-1-2 CF Sump Pump Running (AUX)
Discrete_Inputs_2.0

CF Sump Pump OOR Switch
0 = On, 1 = Off, 2 = Remote

MOV
Move
Source 1
Dest CF_SUMP_OOR_States[1]

2

P-1-2 CF Sump Pump Remote
Discrete_Inputs_2.1

CF Sump Pump OOR Switch
0 = On, 1 = Off, 2 = Remote

MOV
Move
Source 2
Dest CF_SUMP_OOR_States[1]

The next three rungs determine the positon of the switch at the pump
0 = "ON"
1 = "OFF"
2 = "REMOTE"

3

P-1-2 CF Sump Pump Remote Switch in Remote (Located at CF) Discrete_Inputs_2.13 [/]

P-1-2 CF Sump Pump Remote Switch in On (Located at CF) Discrete_Inputs_2.12 [/]

CF Sump Pump Local OOR Switch 0 = On, 1 = Off, 2 = Remote
MOV
Move
Source 0
Dest CF_SUMP_Remote_Switch_OOR_States 2

4

P-1-2 CF Sump Pump Remote Switch in Remote (Located at CF) Discrete_Inputs_2.13 [/]

P-1-2 CF Sump Pump Remote Switch in On (Located at CF) Discrete_Inputs_2.12 [/]

CF Sump Pump Local OOR Switch 0 = On, 1 = Off, 2 = Remote
MOV
Move
Source 1
Dest CF_SUMP_Remote_Switch_OOR_States 2

5

P-1-2 CF Sump Pump Remote Switch in Remote (Located at CF) Discrete_Inputs_2.13

CF Sump Pump Local OOR Switch 0 = On, 1 = Off, 2 = Remote
MOV
Move
Source 2
Dest CF_SUMP_Remote_Switch_OOR_States 2

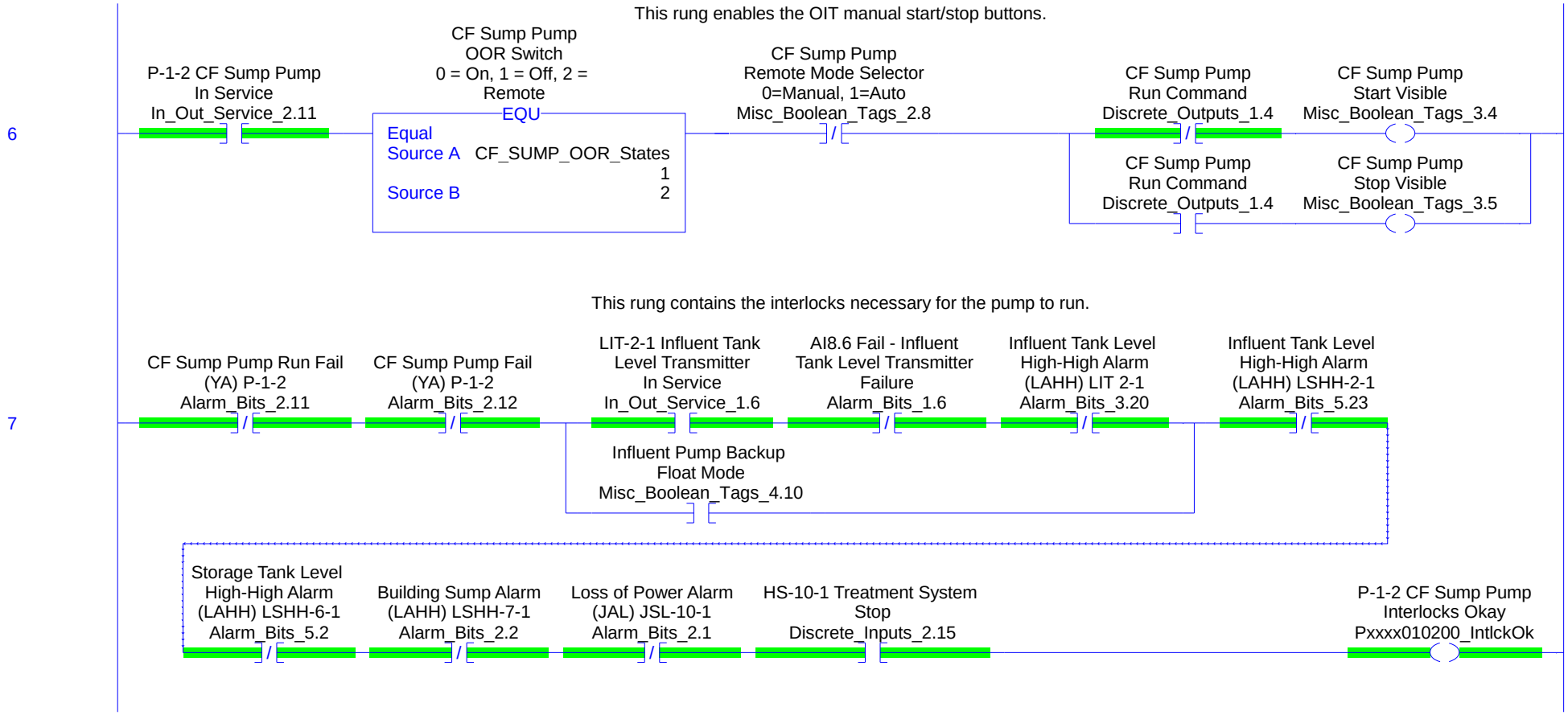
This rung enables the OIT manual start/stop buttons.
6
P-1-2 CF Sump Pump In Service In_Out_Service_2.11
CF Sump Pump OOR Switch 0 = On, 1 = Off, 2 = Remote
EQU
Equal
Source A CF_SUMP_OOR_States
1
Source B 2
CF Sump Pump Remote Mode Selector 0=Manual, 1=Auto Misc_Boolean_Tags_2.8
CF Sump Pump Run Command Discrete_Outputs_1.4
CF Sump Pump Start Visible Misc_Boolean_Tags_3.4
CF Sump Pump Run Command Discrete_Outputs_1.4
CF Sump Pump Stop Visible Misc_Boolean_Tags_3.5
This rung contains the interlocks necessary for the pump to run.
7
CF Sump Pump Run Fail (YA) P-1-2 Alarm_Bits_2.11
CF Sump Pump Fail (YA) P-1-2 Alarm_Bits_2.12
LIT-2-1 Influent Tank Level Transmitter In Service In_Out_Service_1.6
AI8.6 Fail - Influent Tank Level Transmitter Failure Alarm_Bits_1.6
Influent Tank Level High-High Alarm (LAHH) LIT 2-1 Alarm_Bits_3.20
Influent Tank Level High-High Alarm (LAHH) LSHH-2-1 Alarm_Bits_5.23
Influent Pump Backup Float Mode Misc_Boolean_Tags_4.10
Storage Tank Level High-High Alarm (LAHH) LSHH-6-1 Alarm_Bits_5.2
Building Sump Alarm (LAHH) LSHH-7-1 Alarm_Bits_2.2
Loss of Power Alarm (JAL) JSL-10-1 Alarm_Bits_2.1
HS-10-1 Treatment System Stop Discrete_Inputs_2.15
P-1-2 CF Sump Pump Interlocks Okay Pxxxx010200_IntlckOk

8

This rung triggers the pump down latch based on operator level set points.

LT-1-2 - Consolidation Facility Sump Level Transmitter Scaled Value [1x ft elev]

GRT
Greater Than (A>B)
Source A Analog_Inputs_Real_1[9] 587.5629
Source B Process_Setpoints[7] 587.0

LT-1-2 - Consolidation Facility Sump Level Transmitter Scaled Value [1x ft elev]

GRT
Greater Than (A>B)
Source A Analog_Inputs_Real_1[9] 587.5629
Source B Process_Setpoints[8] 586.0

CF PUMP PDL (Pump down latch)
Misc_Boolean_Tags_3.24

CF PUMP PDL (Pump down latch)
Misc_Boolean_Tags_3.24

9

This rung contains triggers the auto call-to-run logic based on receiving a request from the level controller.

P-1-2 CF Sump Pump In Service
In_Out_Service_2.11

P-1-2 CF Sump Pump Interlocks Okay
Pxxxx010200_IntlckOk

CF Sump Pump OOR Switch 0 = On, 1 = Off, 2 = Remote

EQU
Equal
Source A CF_SUMP_OOR_States 1
Source B 2

CF Sump Pump Local OOR Switch 0 = On, 1 = Off, 2 = Remote

EQU
Equal
Source A CF_SUMP_Remote_Switch_OOR_States 2
Source B 2

CF Flow Control Valve OOR Switch 0 = On, 1 = Off, 2 = Remote

NEQ
Not Equal
Source A CF_Valve_OOR_States 2
Source B 1

CF Sump Pump Remote Mode Selector 0=Manual, 1=Auto
Misc_Boolean_Tags_2.8

CF PUMP PDL (Pump down latch)
Misc_Boolean_Tags_3.24

LIT-1-2 CF Sump Level Transmitter In Service
In_Out_Service_1.9

AI8.9 Fail - Consolidation Facility Level Transmitter Failure
Alarm_Bits_1.9 /

CF Sump Level Low-Low Alarm (LALL) LT-1-2
Alarm_Bits_4.3 /

CF Sump Pump Available Flow

GRT
Greater Than (A>B)
Source A Process_Setpoints[4] 42.0
Source B Process_Setpoints[3] 2.0

FIT-1-2 CF Flow Transmitter In Service
In_Out_Service_1.2

AI8.2 Fail - Consolidation Facility Flow Transmitter Failure
Alarm_Bits_1.2 /

CF Flow Low-Low Alarm (FALL) FIT 1-2
Alarm_Bits_3.7 /

Diffused Aeration Tank Level High-High Alarm (LAHH) LSHH-9-1
Alarm_Bits_5.3 /

M-9-1 Aeration Blower Running (AUX)
Discrete_Inputs_3.2

M-9-1 Aeration Blower In Service
In_Out_Service_5.5 /

P-1-2 CF Sump Pump Auto Call-To-Run
Pxxxx010200_AutoCTR

10

This rung starts the pump restart delay timer.

CF Sump Pump
DELAY TIMER
CPT
Compute
Dest DelayDwell_Timers[8].PRE
864000
Expression DwellDelay_Timer_Setpoints[8]*1000

P-1-2 CF Sump Pump
Running (AUX)
Discrete_Inputs_2.0

CF Sump Pump
DELAY TIMER
DelayDwell_Timers[8].TT

CF Sump Pump
DELAY TIMER
TON
Timer On Delay
Timer DelayDwell_Timers[8]
Preset 864000
Accum 0
EN
DN

CF Sump Pump
DELAY TIMER
DelayDwell_Timers[8].TT

P-1-2 CF Sump Pump
Running (AUX)
Discrete_Inputs_2.0

P-1-2 CF Sump Pump
Re-Start Delay
Pxxxx010200_RestartDelay

11

This rung starts the pump dwell on timer.

CF Sump Pump
DWELL TIMER
CPT
Compute
Dest DelayDwell_Timers[9].PRE
60000
Expression DwellDelay_Timer_Setpoints[9]*1000

P-1-2 CF Sump Pump
Running (AUX)
Discrete_Inputs_2.0

CF Sump Pump
DWELL TIMER
DelayDwell_Timers[9].TT

CF Sump Pump
DWELL TIMER
TON
Timer On Delay
Timer DelayDwell_Timers[9]
Preset 60000
Accum 0
EN
DN

CF Sump Pump
DWELL TIMER
DelayDwell_Timers[9].TT

P-1-2 CF Sump Pump
Minimum Runtime Dwell
Pxxxx010200_MinRunDwell

12

This rung activates the pump run output.

P-1-2 CF Sump Pump In Service
In_Out_Service_2.11

P-1-2 CF Sump Pump Interlocks Okay
Pxxxx010200_IntlckOk

CF Sump Pump OOR Switch 0 = On, 1 = Off, 2 = Remote
EQU
Equal
Source A CF_SUMP_OOR_States 1
Source B 2

CF Sump Pump Local OOR Switch 0 = On, 1 = Off, 2 = Remote
EQU
Equal
Source A CF_SUMP_Remote_Switch_OOR_States 2
Source B 2

CF Flow Control Valve OOR Switch 0 = On, 1 = Off, 2 = Remote
NEQ
Not Equal
Source A CF_Valve_OOR_States 2
Source B 1

CF Sump Pump Remote Mode Selector 0=Manual, 1=Auto
Misc_Boolean_Tags_2.8

P-1-2 CF Sump Pump Auto Call-To-Run
Pxxxx010200_AutoCTR

CF Sump Pump Remote Mode Selector 0=Manual, 1=Auto
Misc_Boolean_Tags_2.8

CF Sump Pump Manual Start
Misc_Boolean_Tags_2.9

CF Sump Pump Manual Stop
Misc_Boolean_Tags_2.10

CF Sump Pump Run Command
Discrete_Outputs_1.4

CF Sump Pump DELAY TIMER
DelayDwell_Timers[8].TT

CF Sump Pump Run Command
Discrete_Outputs_1.4

CF Sump Pump Run Command
Discrete_Outputs_1.4

CF Sump Pump DWELL TIMER
DelayDwell_Timers[9].TT

CF Sump Pump Run Command
Discrete_Outputs_1.4

(End)

These rungs copy the I/O from the card to memory locations for use in the program.

0

COP
Copy File
Source Local:2:I.Data
Dest Discrete_Inputs_1
Length 16

1

COP
Copy File
Source Local:3:I.Data
Dest Discrete_Inputs_2
Length 16

2

COP
Copy File
Source Local:4:I.Data
Dest Discrete_Inputs_3
Length 16

3

COP
Copy File
Source Discrete_Outputs_1
Dest Local:6:O.Data
Length 16

4

Analog Inputs 1 Raw Value
(Buffered) [1x mA]

COP
Copy File
Source Local:8:I.Ch0Data
Dest Analog_Inputs_Real_1_RAW[0]
Length 6

Analog Inputs 1 Raw Value
(Buffered) [1x mA]

COP
Copy File
Source Local:8:I.Ch7Data
Dest Analog_Inputs_Real_1_RAW[7]
Length 9

Local:8:I.Ch0Fault — FCV-1-2 CF Flow Control Valve Position Feedback In Service In_Out_Service_1.0 — Analog_Inputs_Fault_1[0]

Local:8:I.Ch1Fault — FIT-1-1 WCC Flow Transmitter In Service In_Out_Service_1.1 — Analog_Inputs_Fault_1[1]

Local:8:I.Ch2Fault — FIT-1-2 CF Flow Transmitter In Service In_Out_Service_1.2 — Analog_Inputs_Fault_1[2]

Local:8:I.Ch3Fault — FIT-1-3-1 ODC EW-1 Flow Transmitter In Service In_Out_Service_1.3 — Analog_Inputs_Fault_1[3]

Local:8:I.Ch4Fault — FIT-1-3-2 ODC EW-2 Flow Transmitter In Service In_Out_Service_1.4 — Analog_Inputs_Fault_1[4]

Local:8:I.Ch5Fault — FIT-5-1 Effluent Flow Transmitter In Service In_Out_Service_1.5 — Analog_Inputs_Fault_1[5]

Local:8:I.Ch6Fault — LIT-2-1 Influent Tank Level Transmitter In Service In_Out_Service_1.6 — Analog_Inputs_Fault_1[6]

LT-1-1-1 WCC EW-1 (Future) Level Transmitter In Service
Local:8:I.Ch7Fault In_Out_Service_1.7 Analog_Inputs_Fault_1[7]

LT-1-3-3 ODC EW-1 Level Transmitter In Service
Local:8:I.Ch8Fault In_Out_Service_1.8 Analog_Inputs_Fault_1[8]

LIT-1-2 CF Sump Level Transmitter In Service
Local:8:I.Ch9Fault In_Out_Service_1.9 Analog_Inputs_Fault_1[9]

LT-1-3-1 ODC EW-1 Level Transmitter In Service
Local:8:I.Ch10Fault In_Out_Service_1.10 Analog_Inputs_Fault_1[10]

LT-1-3-2 ODC EW-1 Level Transmitter In Service
Local:8:I.Ch11Fault In_Out_Service_1.11 Analog_Inputs_Fault_1[11]

LT-1-1-2 WCC EW-2 (Future) Level Transmitter In Service
Local:8:I.Ch12Fault In_Out_Service_1.12 Analog_Inputs_Fault_1[12]

LT-1-3-4 ODC EW-2 Level Transmitter In Service
Local:8:I.Ch13Fault In_Out_Service_1.13 Analog_Inputs_Fault_1[13]

LT-1-3-5 ODC EW-2 Level Transmitter In Service
Local:8:I.Ch14Fault In_Out_Service_1.14 Analog_Inputs_Fault_1[14]

LT-1-3-6 ODC EW-2 Level Transmitter In Service
Local:8:I.Ch15Fault In_Out_Service_1.15 Analog_Inputs_Fault_1[15]

5

When signal dampening is turned on via the appropiate capability bit, a dampened Processed Signal analog output is updated every 250 ms. A 90 % confidence is performed to figure out th
entered damping time in seconds. The default signal dampening is 0.25 seconds.

Capability: AI_1_6
Configuration to Enable
the Input Signal
Dampening
AI_1_6_CAP_Damping

Analog Inputs
(Buffered
M
Move
Source
Dest Analog_Inp

Capability: AI_1_6
Configuration to Enable
the Input Signal
Dampening
AI_1_6_CAP_Damping

Internal: AI_
Dampening Del
MOV
Move
Source
Dest INT_T_AI_1_

AI_1_6 Signal Damping in
[sec]
LEQ
Less Than or Eql (A<=B)
Source A AI_1_6_AC_Damping
30.0
Source B 0

AI_1_6 Signa
[s
M
Move
Source
Dest AI_1_

Internal: AI_1_6
Dampening Delay Timer
INT_T_AI_1_6_Damping.DN

Internal: AI_1
Dampening Delay
TON
Timer On Delay
Timer INT_T_AI_1_6_
Preset
Accum

Internal: AI_1_6
Dampening Delay Timer
INT_T_AI_1_6_Damping.DN

Internal: AI_1_6
Dampening Ratio
CPT
Compute
Dest INT_AI_1_
Expression 1.0/(1.0+(INT_T_AI_1_6_Damping.ACC/1000.0/AI_1_6_AC

Internal: AI_1_6
Dampening Ratio
GRT

Internal: AI_
Dampening R
MOV

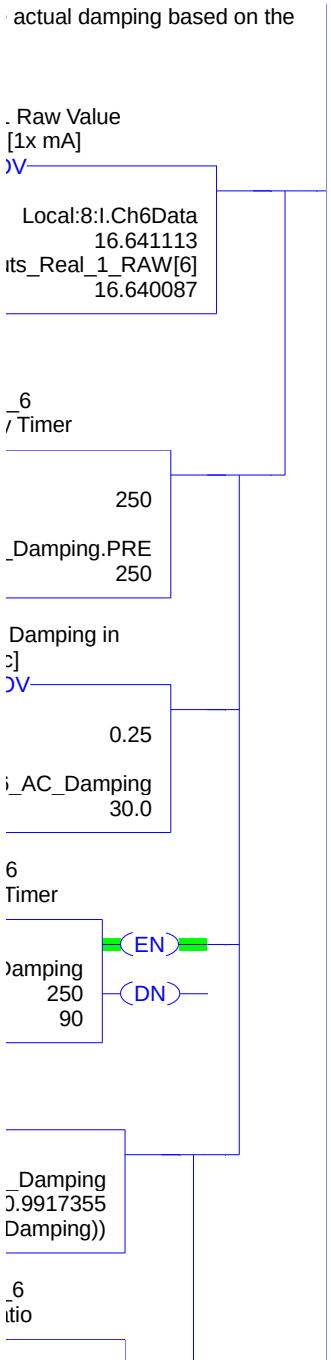
actual damping based on the
. Raw Value
[1x mA]
Local:8:I.Ch6Data
16.641113
its_Real_1_RAW[6]
16.640087
_6
Timer
250
_Damping.PRE
250
Damping in
0.25
_AC_Damping
30.0
6
Timer
EN
DN
amping
250
90
_Damping
.9917355
Damping))
_6
tio

Greater Than (A>B)
Source A INT_AI_1_6_Damping
0.9917355
Source B 1

Move
Source
Dest INT_AI_1_

Analog Inputs 1 Raw Value
(Buffered) [1x mA]
CPT

Compute
Dest Analog_Inputs_Rea

Expression Analog_Inputs_Real_1_RAW[6]*INT_AI_1_6_Damping+((1.0-INT_AI_1_6_Damping)*Local:8

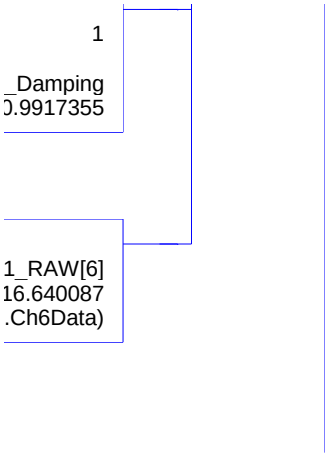
1
_Damping
).9917355
1_RAW[6]
16.640087
.Ch6Data)

6

Analog Inputs 2 Raw Value
(Buffered) [1x mA]

COP
Copy File
Source Local:9:I.Ch0Data
Dest Analog_Inputs_Real_2_RAW[0]
Length 16

PDIT-3-1 Cartridge Filter
Pressure Diff.
Transmitter
In Service

Local:9:I.Ch0Fault | In_Out_Service_1.16 | Analog_Inputs_Fault_2[0]

PDIT-4-1 GAC-1 Filter
Pressure Diff.
Transmitter
In Service

Local:9:I.Ch1Fault | In_Out_Service_1.17 | Analog_Inputs_Fault_2[1]

PDIT-4-2 GAC-2 Filter
Pressure Diff.
Transmitter
In Service

Local:9:I.Ch2Fault | In_Out_Service_1.18 | Analog_Inputs_Fault_2[2]

Local:9:I.Ch3Fault | In_Out_Service_1.19 | Analog_Inputs_Fault_2[3]

Local:9:I.Ch4Fault | In_Out_Service_1.20 | Analog_Inputs_Fault_2[4]

Local:9:I.Ch5Fault | In_Out_Service_1.21 | Analog_Inputs_Fault_2[5]

Local:9:I.Ch6Fault | In_Out_Service_1.22 | Analog_Inputs_Fault_2[6]

Local:9:I.Ch7Fault | In_Out_Service_1.23 | Analog_Inputs_Fault_2[7]

LIT-1-1-3 WCC EW-1 Level
Transmitter
In Service

Local:9:I.Ch8Fault | In_Out_Service_1.24 | Analog_Inputs_Fault_2[8]

LIT-1-1-4 WCC EW-1 Level
Transmitter
In Service

Local:9:I.Ch9Fault | In_Out_Service_1.25 | Analog_Inputs_Fault_2[9]

LIT-1-1-5 WCC EW-1 Level

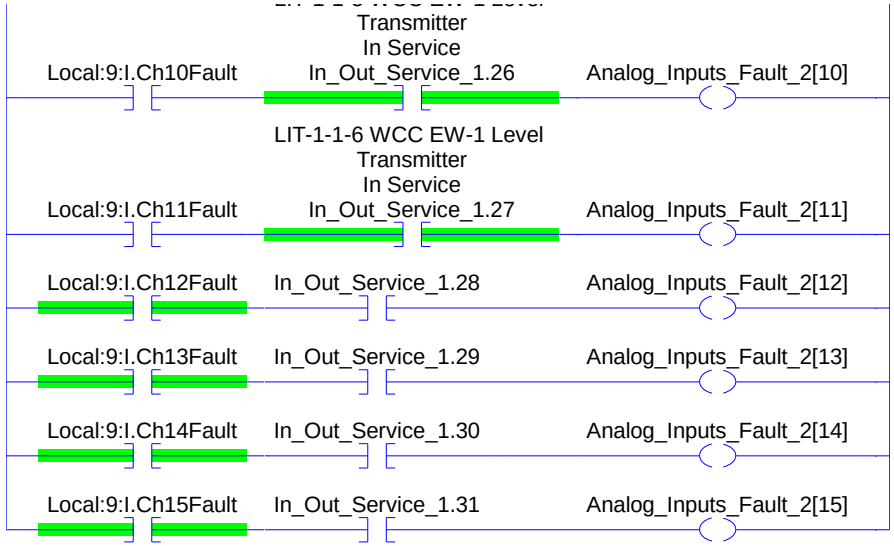
Transmitter
In Service
Local:9:I.Ch10Fault
In_Out_Service_1.26
Analog_Inputs_Fault_2[10]
LIT-1-1-6 WCC EW-1 Level
Transmitter
In Service
Local:9:I.Ch11Fault
In_Out_Service_1.27
Analog_Inputs_Fault_2[11]
Local:9:I.Ch12Fault
In_Out_Service_1.28
Analog_Inputs_Fault_2[12]
Local:9:I.Ch13Fault
In_Out_Service_1.29
Analog_Inputs_Fault_2[13]
Local:9:I.Ch14Fault
In_Out_Service_1.30
Analog_Inputs_Fault_2[14]
Local:9:I.Ch15Fault
In_Out_Service_1.31
Analog_Inputs_Fault_2[15]

7

COP
Copy File
Source Local:11:O.Ch0Data
Dest Analog_Outputs_Real_1_RAW[0]
Length 8

Local:11:I.Ch0Fault In_Out_Service_6.0 Analog_Outputs_Fault_1[0]

Local:11:I.Ch1Fault In_Out_Service_6.1 Analog_Outputs_Fault_1[1]

Local:11:I.Ch2Fault In_Out_Service_6.2 Analog_Outputs_Fault_1[2]

Local:11:I.Ch3Fault In_Out_Service_6.3 Analog_Outputs_Fault_1[3]

Local:11:I.Ch4Fault In_Out_Service_6.4 Analog_Outputs_Fault_1[4]

Local:11:I.Ch5Fault In_Out_Service_6.5 Analog_Outputs_Fault_1[5]

Local:11:I.Ch6Fault In_Out_Service_6.6 Analog_Outputs_Fault_1[6]

Local:11:I.Ch7Fault In_Out_Service_6.7 Analog_Outputs_Fault_1[7]

(End)

0

Discrete and Analog Input Mapping

JSR
Jump To Subroutine
Routine Name InputOutput_Mapping

1

JSR
Jump To Subroutine
Routine Name Periodic_Reset

2

CF Valve Pos. Feedback Scaling

JSR
Jump To Subroutine
Routine Name A08_00_FCVxx010200_Scl

3

WCC Flow Scaling, Minimum, Maximum, Average

JSR
Jump To Subroutine
Routine Name A08_01_FITxx010100_SclMinMaxAvg

4

CF Flow Scaling, Minimum, Maximum, Average

JSR
Jump To Subroutine
Routine Name A08_02_FITxx010200_SclMinMaxAvg

5

ODC EW-1 Flow Scaling, Minimum, Maximum, Average

JSR
Jump To Subroutine
Routine Name A08_03_FITxx010301_SclMinMaxAvg

6

ODC EW-2 Flow Scaling, Minimum, Maximum, Average

JSR
Jump To Subroutine
Routine Name A08_04_FITxx010302_SclMinMaxAvg

7

Effluent Flow Scaling,
Minimum, Maximum, Average

JSR
Jump To Subroutine
Routine Name A08_05_FITxx050100_SclMinMaxAvg

8

Influent Tank Level
Scaling, Minimum,
Maximum, Average

JSR
Jump To Subroutine
Routine Name A08_06_LITxx020100_SclMinMaxAvg

9

WCC, Well EW-1 Level
(Down Well) Future
Scaling, Minimum,
Maximum, Average

JSR
Jump To Subroutine
Routine Name A08_07_LTxxx010101_SclMinMaxAvg

10

ODC, Well EW-1 (PZ-3)
Level (Outside) Scaling,
Minimum, Maximum, Average

JSR
Jump To Subroutine
Routine Name A08_08_LTxxx010303_SclMinMaxAvg

11

Consolidation Facility
Level (Sump) Scaling,
Minimum, Maximum, Average

JSR
Jump To Subroutine
Routine Name A08_09_LTxxx010200_SclMinMaxAvg

12

ODC, Well EW-1 Level
(Down Well) Scaling,
Minimum, Maximum, Average

JSR
Jump To Subroutine
Routine Name A08_10_LTxxx010301_SclMinMaxAvg

13

ODC, Well EW-1 (PZ-4)
Level (Outside) Scaling,
Minimum, Maximum, Average

JSR
Jump To Subroutine
Routine Name A08_11_LTxxx010302_SclMinMaxAvg

14

WCC, Well EW-2 Level
(Down Well) Future
Scaling, Minimum,
Maximum, Average

JSR
Jump To Subroutine
Routine Name A08_12_LTxxx010102_SclMinMaxAvg

15

ODC, Well EW-2 Level
(Down Well) Scaling,
Minimum, Maximum, Average

JSR
Jump To Subroutine
Routine Name A08_13_LTxxx010304_SclMinMaxAvg

16

ODC, Well EW-2 (PZ-8)
Level (Outside) Scaling,
Minimum, Maximum, Average

JSR
Jump To Subroutine
Routine Name A08_14_LTxxx010305_SclMinMaxAvg

17

ODC, Well EW-2 (PZ-7)
Level (Outside) Scaling,
Minimum, Maximum, Average

JSR
Jump To Subroutine
Routine Name A08_15_LTxxx010306_SclMinMaxAvg

18

Cartridge Filter, M-3-1,
Pressure Diff. Scaling,
Minimum, Maximum, Average

JSR
Jump To Subroutine
Routine Name A09_00_PDITx030100_SclMinMaxAvg

19

GAC-1, M-4-1, Pressure
Diff. Scaling, Minimum,
Maximum, Average

JSR
Jump To Subroutine
Routine Name A09_01_PDITx040100_SclMinMaxAvg

20

GAC-2, M-4-2, Pressure
Diff. Scaling, Minimum,
Maximum, Average

JSR
Jump To Subroutine
Routine Name A09_02_PDITx040200_SclMinMaxAvg

21

ODC, Well EW-1 Speed
Feedback Scaling

JSR
Jump To Subroutine
Routine Name A09_03_Pxxxx010301_Scl

22

ODC, Well EW-2 Speed
Feedback Scaling

JSR
Jump To Subroutine
Routine Name A09_04_Pxxxx010302_Scl

23

WCC, Well EW-1 (W10)
Level (Outside) Scaling,
Minimum, Maximum, Average

JSR
Jump To Subroutine
Routine Name A09_08_LTxxx010103_SclMinMaxAvg

24

WCC, Well EW-1 (P10)
Level (Inside) Scaling,
Minimum, Maximum, Average

JSR
Jump To Subroutine
Routine Name A09_09_LTxxx010104_SclMinMaxAvg

25

WCC, Well EW-2 (W12)
Level (Outside) Scaling,
Minimum, Maximum, Average

JSR
Jump To Subroutine
Routine Name A09_10_LTxxx010105_SclMinMaxAvg

26

WCC, Well EW-2 (P12)
Level (Inside) Scaling,
Minimum, Maximum, Average

JSR
Jump To Subroutine
Routine Name A09_11_LTxxx010106_SclMinMaxAvg

27

JSR
Jump To Subroutine
Routine Name Alarms

28

JSR
Jump To Subroutine
Routine Name CF_FCV_Control

29

JSR
Jump To Subroutine
Routine Name ODC_EW1_Control

30

JSR
Jump To Subroutine
Routine Name ODC_EW2_Control

31

JSR
Jump To Subroutine
Routine Name WCC_EW1_Control

32

JSR
Jump To Subroutine
Routine Name WCC_EW2_Control

33

JSR
Jump To Subroutine
Routine Name CF_Sump_Pump

34

Treatment Building
Influent Tank Pump

JSR
Jump To Subroutine
Routine Name TB_Influent_Pump

35

Treatment Building Sump
Pump

JSR
Jump To Subroutine
Routine Name TB_Sump_Pump

36

Treatment Building
Diffused Aeration Blower

JSR
Jump To Subroutine
Routine Name TB_DAT_Blower

37

Treatment Building
Chemical Feed Pump

JSR
Jump To Subroutine
Routine Name TB_ChemFeed_Pump

38

JSR
Jump To Subroutine
Routine Name Motor_Run_Time

39

This rung allows access to the intrusion setup screen. The default access code is 'abcd'. The access code will be automatically cleared after 7 seconds, however the intrusion setup screen will remain active until exited.

Access Code Entered by operator so the button is visiable to goto Intrusion Alarm Setup

EQU
Equal
Source A Security_Disable
''
Source B Security
'abcd'

Intrusion Page Access Enabled
Misc_Boolean_Tags_3.22

TON
Timer On Delay
Timer Security_Enable_Timer[0]
Preset 7000
Accum 0
EN
DN

Access Code Entered by operator so the button is visiable to goto Intrusion Alarm Setup

MOV
Move
Source 0
Dest Security_Disable.LEN
0

Security_Enable_Timer[0].DN

Intrusion Page Access Enabled
Misc_Boolean_Tags_3.22

40

This rung disables the intrusion alarm system.

This code disables the alarm - entered by operator

EQU
Equal
Source A Intrusion_Diable_Code
''
Source B Intrusion_Code
'zxc'

Intrusion Alarm System: Auto Re-Arm Alarm Enable Delay Bit
Intrusion_Alarm_Bits.30

Intrusion Alarm System: Alarm Enable Delay Bit
Intrusion_Alarm_Bits.31

Alarm_Timers_2[15].DN

Intrusion Alarm Status 0=Enabled, 1=Disabled
Intrusion_Alarm_Bits.1

41

This rung enables the intrusion alarm system after the enable bit is received from the OIT and the set time expires.

IA Re-Activate Setpoint (Minutes)
LES
Less Than (A<B)
Source A Intrusion_Alarm_SetPoints[1] 60.0
Source B 0

IA Re-Activate Setpoint (Minutes)
CLR
Clear
Dest Intrusion_Alarm_SetPoints[1] 60.0

IA Re-Activate Setpoint (Minutes)
GRT
Greater Than (A>B)
Source A Intrusion_Alarm_SetPoints[1] 60.0
Source B 300

IA Activate Delay Timer (Seconds)
MUL
Multiply
Source A Intrusion_Alarm_SetPoints[1] 60.0
Source B 1000
Dest Intrusion_Alarm_Timers[1].PRE 60000

Intrusion Alarm System: Momentary Alarm Enable Bit from OIT
Intrusion_Alarm_Bits.0

Intrusion Alarm System: Alarm Enable Delay Bit
Intrusion_Alarm_Bits.31

This code disables the alarm - entered by operator
EQU
Equal
Source A Intrusion_Diable_Code ''
Source B Intrusion_Code 'zxc'

IA Activate Delay Timer (Seconds)
TON
Timer On Delay
Timer Intrusion_Alarm_Timers[1]
Preset 60000
Accum 0
EN
DN

Building Intrusion Alarm (ZAL) ZSL-10-1
Alarm_Bits_2.15

Intrusion Alarm System: Alarm Enable Delay Bit
Intrusion_Alarm_Bits.31

IA Activate Delay Timer (Seconds)
Intrusion_Alarm_Timers[1].DN

This code disables the alarm - entered by operator
MOV
Move
Source 0

Dest Intrusion_Diable_Code.LEN
0

42

This rung re-activates the intrusion alarm after a set time amount in minutes. Setting this setting to zero disables the auto re-activation of the intrusion alarm.

IA Auto Re-Activate Setpoint (Minutes)
NEQ
Not Equal
Source A Intrusion_Alarm_SetPoints[2] 600.0
Source B 0

IA Auto Re-Activate Setpoint (Minutes)
LES
Less Than (A<B)
Source A Intrusion_Alarm_SetPoints[2] 600.0
Source B 0

IA Auto Re-Activate Setpoint (Minutes)
GRT
Greater Than (A>B)
Source A Intrusion_Alarm_SetPoints[2] 600.0
Source B 10000

IA Auto Re-Activate Setpoint (Minutes)
CLR
Clear
Dest Intrusion_Alarm_SetPoints[2] 600.0

IA Auto Re-Activate Timer (Minutes)
MUL
Multiply
Source A Intrusion_Alarm_SetPoints[2] 600.0
Source B 60000
Dest Intrusion_Alarm_Timers[2].PRE 36000000

This code disables the alarm - entered by operator
EQU
Equal
Source A Intrusion_Diable_Code ''
Source B Intrusion_Code 'zxc'

IA Auto Re-Activate Timer (Minutes)
TON
Timer On Delay
Timer Intrusion_Alarm_Timers[2]
Preset 36000000
Accum 0
EN
DN

IA Auto Re-Activate Timer (Minutes) Intrusion_Alarm_Timers[2].DN

This code disables the alarm - entered by operator
MOV
Move
Source 0
Dest Intrusion_Diable_Code.LEN 0

Building Intrusion Alarm

Intrusion Alarm System: Auto Re-Arm Alarm Enable

(ZAL) ZSL-10-1
Alarm_Bits_2.15

Delay Bit
Intrusion_Alarm_Bits.30

This rung allows access to none critical parameters on various screens. The default access code is 'Info'. The access code will be automatically cleared after 30 minutes.

43

EQU
Equal
Source A NON_CRITICAL_INFO_CODE
''
Source B NON_CRITICAL_INFO_CODE_RESET
'Info'

Non-Critical Parameter
Enable Bit
Misc_Boolean_Tags_2.31

TON
Timer On Delay
Timer Misc_Timers[14]
Preset 7200000
Accum 0
EN
DN

MOV
Move
Source 0
Dest NON_CRITICAL_INFO_CODE.LEN
0

Misc_Timers[14].DN

Non-Critical Parameter
Enable Bit
Misc_Boolean_Tags_2.31

(End)

0

P-1-1-1 WCC EW-1 Pump
Running (AUX)
Discrete_Inputs_1.4

RTO
Retentive Timer On
Timer Elapsed_Run_Timers[0]
Preset 360000
Accum 183343
EN
DN

Elapsed_Run_Timers[0].DN

ADD
Add
Source A 0.1
Source B Motor_Run_Times[0]
9193.132
Dest Motor_Run_Times[0]
9193.132

Elapsed_Run_Timers[0]
RES

1

EQU
Equal
Source A WCC_EW1_HRS_RESET
''
Source B WCC_EW1_HRS_RESET_CODE
'P-1-1-1'

MOV
Move
Source 0
Dest Motor_Run_Times[0]
9193.132

MOV
Move
Source 0
Dest WCC_EW1_HRS_RESET.LEN
0

2

P-1-1-2 WCC EW-2 Pump Running (AUX) Discrete_Inputs_1.7

RTO
Retentive Timer On
Timer Elapsed_Run_Timers[1]
Preset 360000
Accum 288588
EN
DN

Elapsed_Run_Timers[1].DN

ADD
Add
Source A 0.1
Source B Motor_Run_Times[1] 14397.426
Dest Motor_Run_Times[1] 14397.426

Elapsed_Run_Timers[1]
RES

3

EQU
Equal
Source A WCC_EW2_HRS_RESET ''
Source B WCC_EW2_HRS_RESET_CODE 'P-1-1-2'

MOV
Move
Source 0
Dest Motor_Run_Times[1] 14397.426

MOV
Move
Source 0
Dest WCC_EW2_HRS_RESET.LEN 0

4

P-1-3-1 ODC EW-1 Pump Running (AUX)
Discrete_Inputs_1.10

RTO
Retentive Timer On
Timer Elapsed_Run_Timers[2]
Preset 360000
Accum 359806
EN
DN

Elapsed_Run_Timers[2].DN

ADD
Add
Source A 0.1
Source B Motor_Run_Times[2] 3913.9675
Dest Motor_Run_Times[2] 3913.9675

Elapsed_Run_Timers[2]
RES

5

EQU
Equal
Source A ODC1_HRS_RESET ''
Source B ODC1_HRS_RESET_CODE 'P-1-3-1'

MOV
Move
Source 0
Dest Motor_Run_Times[2] 3913.9675

MOV
Move
Source 0
Dest ODC1_HRS_RESET.LEN 0

6

P-1-3-2 ODC EW-2 Pump Running (AUX)
Discrete_Inputs_1.13

RTO
Retentive Timer On
Timer Elapsed_Run_Timers[3]
Preset 360000
Accum 255930
EN
DN

Elapsed_Run_Timers[3].DN

ADD
Add
Source A 0.1
Source B Motor_Run_Times[3] 5067.693
Dest Motor_Run_Times[3] 5067.693

Elapsed_Run_Timers[3]
RES

7

EQU
Equal
Source A ODC2_HRS_RESET ''
Source B ODC2_HRS_RESET_CODE 'P-1-3-2'

MOV
Move
Source 0
Dest Motor_Run_Times[3] 5067.693

MOV
Move
Source 0
Dest ODC2_HRS_RESET.LEN 0

8

P-1-2 CF Sump Pump Running (AUX) Discrete_Inputs_2.0

RTO
Retentive Timer On
Timer Elapsed_Run_Timers[4]
Preset 360000
Accum 64476
EN
DN

Elapsed_Run_Timers[4].DN

ADD
Add
Source A 0.1
Source B Motor_Run_Times[4] 6979.0283
Dest Motor_Run_Times[4] 6979.0283

Elapsed_Run_Timers[4]
RES

9

EQU
Equal
Source A CF_PUMP_HRS_RESET ''
Source B CF_PUMP_HRS_RESET_CODE 'P-1-2'

MOV
Move
Source 0
Dest Motor_Run_Times[4] 6979.0283

MOV
Move
Source 0
Dest CF_PUMP_HRS_RESET.LEN 0

10

P-2-1 Influent Tank Pump Running (AUX)
Discrete_Inputs_2.6

RTO
Retentive Timer On
Timer Elapsed_Run_Timers[5]
Preset 360000
Accum 337872
EN
DN

Elapsed_Run_Timers[5].DN

ADD
Add
Source A 0.1
Source B Motor_Run_Times[5] 11847.959
Dest Motor_Run_Times[5] 11847.959

Elapsed_Run_Timers[5]
RES

11

EQU
Equal
Source A INFL_PUMP_HRS_RESET ''
Source B INFL_PUMP_HRS_RESET_CODE 'P-2-1'

MOV
Move
Source 0
Dest Motor_Run_Times[5] 11847.959

MOV
Move
Source 0
Dest INFL_PUMP_HRS_RESET.LEN 0

12

FCV-1-2 CF Flow Control Valve Enabled
Discrete_Inputs_2.11

RTO
Retentive Timer On
Timer Elapsed_Run_Timers[6]
Preset 360000
Accum 130001
EN
DN

Elapsed_Run_Timers[6].DN

ADD
Add
Source A 0.1
Source B Motor_Run_Times[6] 22998.775
Dest Motor_Run_Times[6] 22998.775

Elapsed_Run_Timers[6]
RES

13

EQU
Equal
Source A CF_VALVE_HRS_RESET ''
Source B CF_VALVE_HRS_RESET_CODE 'FCV-1-2'

MOV
Move
Source 0
Dest Motor_Run_Times[6] 22998.775

MOV
Move
Source 0
Dest CF_VALVE_HRS_RESET.LEN 0

14

M-9-1 Aeration Blower Running (AUX) Discrete_Inputs_3.2

RTO
Retentive Timer On
Timer Elapsed_Run_Timers[7]
Preset 360000
Accum 212346
EN
DN

Elapsed_Run_Timers[7].DN

ADD
Add
Source A 0.1
Source B Motor_Run_Times[7] 24105.934
Dest Motor_Run_Times[7] 24105.934

Elapsed_Run_Timers[7]
RES

15

EQU
Equal
Source A DTA_BLOWER_HRS_RESET ''
Source B DTA_BLOWER_HRS_RESET_CODE 'M-9-1'

MOV
Move
Source 0
Dest Motor_Run_Times[7] 24105.934

MOV
Move
Source 0
Dest DTA_BLOWER_HRS_RESET.LEN 0

(End)

The next three rungs determine the positon of the switch on the front of the control panel
0 = "ON"
1 = "OFF"
2 = "REMOTE"

0

P-1-3-1 ODC EW-1 Pump Remote
Discrete_Inputs_1.11 /

P-1-3-1 ODC EW-1 Pump Running (AUX)
Discrete_Inputs_1.10

P-1-3-1 ODC EW-1 Pump OOR Switch
0 = On, 1 = Off, 2 = Remote

MOV
Move
Source 0
Dest ODC_EW1_OOR_States[1]

1

P-1-3-1 ODC EW-1 Pump Remote
Discrete_Inputs_1.11 /

P-1-3-1 ODC EW-1 Pump Running (AUX)
Discrete_Inputs_1.10 /

P-1-3-1 ODC EW-1 Pump OOR Switch
0 = On, 1 = Off, 2 = Remote

MOV
Move
Source 1
Dest ODC_EW1_OOR_States[1]

2

P-1-3-1 ODC EW-1 Pump Remote
Discrete_Inputs_1.11

P-1-3-1 ODC EW-1 Pump OOR Switch
0 = On, 1 = Off, 2 = Remote

MOV
Move
Source 2
Dest ODC_EW1_OOR_States[1]

This rung enables the OIT manual start/stop buttons.

3

P-1-3-1 ODC EW-1 Pump In Service In_Out_Service_2.7

P-1-3-1 ODC EW-1 Pump OOR Switch 0 = On, 1 = Off, 2 = Remote

EQU
Equal
Source A ODC_EW1_OOR_States 1
Source B 2

P-1-3-1 ODC EW-1 Pump Remote Mode Selector 0=Manual, 1=Auto Misc_Boolean_Tags_2.12 /

P-1-3-1 ODC EW-1 Pump Run Command Discrete_Outputs_1.2 /

P-1-3-1 ODC EW-1 Pump Start Visible Misc_Boolean_Tags_3.6

P-1-3-1 ODC EW-1 Pump Run Command Discrete_Outputs_1.2

P-1-3-1 ODC EW-1 Pump Stop Visible Misc_Boolean_Tags_3.7

This rung contains the interlocks necessary for the pump to run.

4

ODC EW-1 Pump Run Fail (YA) P-1-3-1 Alarm_Bits_2.7 /

ODC EW-1 Pump Fault (YA) P-1-3-1 Alarm_Bits_2.8 /

LIT-2-1 Influent Tank Level Transmitter In Service In_Out_Service_1.6

AI8.6 Fail - Influent Tank Level Transmitter Failure Alarm_Bits_1.6 /

Influent Tank Level High-High Alarm (LAHH) LIT 2-1 Alarm_Bits_3.20 /

LSHH-2-1 Influent Tank Level High-High N.C. (Held Open) Discrete_Inputs_3.7

Influent Pump Backup Float Mode Misc_Boolean_Tags_4.10

Storage Tank Level High-High Alarm (LAHH) LSHH-6-1 Alarm_Bits_5.2 /

Building Sump Alarm (LAHH) LSHH-7-1 Alarm_Bits_2.2 /

Loss of Power Alarm (JAL) JSL-10-1 Alarm_Bits_2.1 /

HS-10-1 Treatment System Stop Discrete_Inputs_2.15

P-1-3-1 ODC EW-1 Pump Interlocks Okay Pxxxx010301_IntlckOk

5

ODC EW-1
Level/Differential
Control 0=Differential
Misc_Boolean_Tags_2.15

ODC EW-1 PID
MOV
Move
Source Process_Setpoints[11]
576.0
Dest PID_ODC_EW1.SP
576.0

ODC EW-1 Pump PID Process
Variable
MOV
Move
Source ODC_Water_Level[0]
580.16296
Dest Process_Setpoints[13]
580.16364

ODC EW-1 PID
PID_ODC_EW1.CA

6

ODC EW-1
Level/Differential
Control 0=Differential
Misc_Boolean_Tags_2.15

ODC EW-1 PID
MOV
Move
Source Process_Setpoints[12]
1.0
Dest PID_ODC_EW1.SP
576.0

ODC EW-1 Pump PID Process
Variable
SUB
Subtract
Source A ODC_Water_Level[1]
582.98413
Source B ODC_Water_Level[2]
580.3894
Dest Process_Setpoints[13]
580.16364

7

This rung calculates the start level for the pump.

ODC EW-1 Pump SP LEVEL START

ADD

Add	
Source A	Process_Setpoints[11] 576.0
Source B	2
Dest	Process_Setpoints[14] 578.0

8

This rung triggers the pump down latch based on operator level set points.

LT-1-3-1 ODC EW-1 Level Transmitter In Service
In_Out_Service_1.10

AI8.10 Fail - ODC Containment Cell EW-1 Level (Down Well) Transmitter 1 Failure
Alarm_Bits_1.10 /

ODC EW-1 Level/Differential Control 0=Differential
Misc_Boolean_Tags_2.15

ODC EW-1 Level/Differential Control 0=Differential
Misc_Boolean_Tags_2.15 /

LT-1-3-2 ODC EW-1 Level Transmitter In Service
In_Out_Service_1.11

AI8.11 Fail - ODC Containment Cell EW-1 Level (Outside Wall) Transmitter 2 Failure
Alarm_Bits_1.11 /

LT-1-3-3 ODC EW-1 Level Transmitter In Service
In_Out_Service_1.8

AI8.8 Fail - ODC Containment Cell EW-1 Level (Inside Wall) Transmitter 3 Failure
Alarm_Bits_1.8 /

ODC EW-1 Pump PID Process Variable
GRT
Greater Than (A>B)
Source A Process_Setpoints[13] 580.16364
Source B Process_Setpoints[12] 1.0

LT-1-3-1 Level (Outside Containment Cell, EW-1, Down Well) [1x ft elev.]
GRT
Greater Than (A>B)
Source A ODC_Water_Level[0] 580.16296
Source B Process_Setpoints[14] 578.0

ODC EW-1 PID
GRT
Greater Than (A>B)
Source A PID_ODC_EW1.OUT 50.5
Source B Process_Setpoints[28] 50.0

ODC EW-1 PDL (based on speed)
Misc_Boolean_Tags_3.25

LT-1-3-1 Level (Outside Containment Cell, EW-1, Down Well) [1x ft elev.]
GRT
Greater Than (A>B)
Source A ODC_Water_Level[0] 580.16296
Source B Process_Setpoints[11] 576.0

ODC EW-1 PDL (based on speed)
Misc_Boolean_Tags_3.25

9

This rung contains triggers the auto call-to-run logic based on receiving a request from the level controller.

P-1-3-1 ODC EW-1 Pump In Service
In_Out_Service_2.7

P-1-3-1 ODC EW-1 Pump Interlocks Okay
Pxxxx010301_IntlckOk

P-1-3-1 ODC EW-1 Pump OOR Switch 0 = On, 1 = Off, 2 = Remote

EQU
Equal
Source A ODC_EW1_OOR_States
Source B 1
2

P-1-3-1 ODC EW-1 Pump Remote Mode Selector 0=Manual, 1=Auto
Misc_Boolean_Tags_2.12

ODC EW-1 PDL (based on speed)
Misc_Boolean_Tags_3.25

P-1-3-1 ODC EW-1 Pump Low Flow Delay Timer
INT_T_Pxxxx010301_LowFlow.DN

AI8.3 Fail - ODC Containment Cell EW-1 Flow Transmitter Failure
Alarm_Bits_1.3

ODC EW-1 Flow Low-Low Alarm (FALL) FIT-1-3-1
Alarm_Bits_3.11

LT-1-3-1 ODC EW-1 Level Transmitter In Service
In_Out_Service_1.10

AI8.10 Fail - ODC Containment Cell EW-1 Level (Down Well) Transmitter 1 Failure
Alarm_Bits_1.10

FIT-1-3-1 ODC EW-1 Flow Transmitter In Service
In_Out_Service_1.3

ODC EW-1 Level Low-Low Alarm (LALL) LT-1-3-1
Alarm_Bits_4.7

Diffused Aeration Tank Level High-High Alarm (LAHH) LSHH-9-1
Alarm_Bits_5.3

M-9-1 Aeration Blower Running (AUX)
Discrete_Inputs_3.2

M-9-1 Aeration Blower In Service
In_Out_Service_5.5

P-1-3-1 ODC EW-1 Pump Auto Call-To-Run
Pxxxx010301_AutoCTR

10

This rung monitors pump flow, if pump flow drops below 0.5 gpm and starts a 60 second dwell timer.

FIT-1-3-1 ODC EW-1 Flow Transmitter In Service
In_Out_Service_1.3

AI8.3 Fail - ODC Containment Cell EW-1 Flow Transmitter Failure
Alarm_Bits_1.3

P-1-3-1 ODC EW-1 Pump Auto Call-To-Run
Pxxxx010301_AutoCTR

P-1-3-1 ODC EW-1 Pump Running (AUX)
Discrete_Inputs_1.10

FIT-1-3-1 ODC Containment Cell EW-1 Flow Transmitter Scaled Value [1x gpm]

LES
Less Than (A<B)
Source A Analog_Inputs_Real_1[3]
0.0
Source B 0.5

P-1-3-1 ODC EW-1 Pump Low Flow Delay Timer
INT_T_Pxxxx010301_LowFlow.DN

P-1-3-1 ODC EW-1 Pump Well Recovery Timer
INT_T_Pxxxx010301_WellRecover.DN

P-1-3-1 ODC EW-1 Pump Low Flow Delay Timer

MUL
Multiply
Source A 60
Source B 1000
Dest INT_T_Pxxxx010301_LowFlow.PRE
60000

P-1-3-1 ODC EW-1 Pump Low Flow Delay Timer

TON
Timer On Delay
Timer INT_T_Pxxxx010301_LowFlow
Preset 60000
Accum 0
EN
DN

11

This rung starts the well recovery timer once a low flow condition has been detected which the low flow latch after 30 minutes.

FIT-1-3-1 ODC EW-1 Flow Transmitter In Service
In_Out_Service_1.3

AI8.3 Fail - ODC Containment Cell EW-1 Flow Transmitter Failure
Alarm_Bits_1.3

P-1-3-1 ODC EW-1 Pump Low Flow Delay Timer
INT_T_Pxxxx010301_LowFlow.DN

P-1-3-1 ODC EW-1 Pump Well Recovery Timer
MUL
Multiply
Source A 30
Source B 60000
Dest INT_T_Pxxxx010301_WellRecover.PRE
1800000

P-1-3-1 ODC EW-1 Pump Well Recovery Timer
TON
Timer On Delay
Timer INT_T_Pxxxx010301_WellRecover
Preset 1800000
Accum 0
EN
DN

P-1-3-1 ODC EW-1 Pump Low Flow Recovery Delay
Pxxxx010301_LowFlowRecv

12

This rung starts the pump restart delay timer.

P-1-3-1 ODC EW-1 Pump DELAY TIMER
CPT
Compute
Dest DelayDwell_Timers[4].PRE 288000
Expression DwellDelay_Timer_Setpoints[4]*1000

P-1-3-1 ODC EW-1 Pump Running (AUX) Discrete_Inputs_1.10

P-1-3-1 ODC EW-1 Pump DELAY TIMER DelayDwell_Timers[4].TT

P-1-3-1 ODC EW-1 Pump DELAY TIMER
TON
Timer On Delay
Timer DelayDwell_Timers[4]
Preset 288000
Accum 0
EN
DN

P-1-3-1 ODC EW-1 Pump DELAY TIMER DelayDwell_Timers[4].TT

P-1-3-1 ODC EW-1 Pump Running (AUX) Discrete_Inputs_1.10 /

P-1-3-1 ODC EW-1 Pump Re-Start Delay Pxxxx010301_RestartDelay

13

This rung starts the pump dwell on timer.

P-1-3-1 ODC EW-1 Pump DWELL TIMER
CPT
Compute
Dest DelayDwell_Timers[5].PRE 60000
Expression DwellDelay_Timer_Setpoints[5]*1000

P-1-3-1 ODC EW-1 Pump Running (AUX) Discrete_Inputs_1.10

P-1-3-1 ODC EW-1 Pump DWELL TIMER DelayDwell_Timers[5].TT

P-1-3-1 ODC EW-1 Pump DWELL TIMER
TON
Timer On Delay
Timer DelayDwell_Timers[5]
Preset 60000
Accum 0
EN
DN

P-1-3-1 ODC EW-1 Pump DWELL TIMER DelayDwell_Timers[5].TT

P-1-3-1 ODC EW-1 Pump Minimum Runtime Dwell Pxxxx010301_MinRunDwell

14

This rung activates the pump run output.

P-1-3-1 ODC EW-1 Pump In Service In_Out_Service_2.7

P-1-3-1 ODC EW-1 Pump Interlocks Okay Pxxxx010301_IntlckOk

P-1-3-1 ODC EW-1 Pump OOR Switch 0 = On, 1 = Off, 2 = Remote

EQU
Equal
Source A ODC_EW1_OOR_States 1
Source B 2

P-1-3-1 ODC EW-1 Pump Remote Mode Selector 0=Manual, 1=Auto Misc_Boolean_Tags_2.12

P-1-3-1 ODC EW-1 Pump Auto Call-To-Run Pxxxx010301_AutoCTR

P-1-3-1 ODC EW-1 Pump DELAY TIMER DelayDwell_Timers[4].TT

P-1-3-1 ODC EW-1 Pump Remote Mode Selector 0=Manual, 1=Auto Misc_Boolean_Tags_2.12

P-1-3-1 ODC EW-1 Pump Manual Start Misc_Boolean_Tags_2.13

P-1-3-1 ODC EW-1 Pump Run Command Discrete_Outputs_1.2

P-1-3-1 ODC EW-1 Pump Manual Stop Misc_Boolean_Tags_2.14

P-1-3-1 ODC EW-1 Pump Run Command Discrete_Outputs_1.2

P-1-3-1 ODC EW-1 Pump Run Command Discrete_Outputs_1.2

P-1-3-1 ODC EW-1 Pump DWELL TIMER DelayDwell_Timers[5].TT

P-1-3-1 ODC EW-1 Pump Run Command Discrete_Outputs_1.2

15

This rung enables updating of the PID every 50 milliseconds.

ODC EW1 PID Loop Timer
PID_Loop_Timers[0].DN

ODC EW1 PID Loop Timer
TON
Timer On Delay
Timer PID_Loop_Timers[0]
Preset 50
Accum 4
EN
DN

16

This rung disables the PID tieback mode.

ODC EW-1 PID
PID_ODC_EW1.MO
U

17

This rung switches the PID to manual mode.

P-1-3-1 ODC EW-1 Pump
OOR Switch
0 = On, 1 = Off, 2 =
Remote
EQU
Equal
Source A ODC_EW1_OOR_States
1
Source B 2

P-1-3-1 ODC EW-1 Pump
Remote Mode Selector
0=Manual, 1=Auto
Misc_Boolean_Tags_2.12

ODC EW-1 PID
PID_ODC_EW1.SWM

ODC EW-1 PID
MOV
Move
Source Process_Setpoints[10]
50.5
Dest PID_ODC_EW1.SO
50.5

P-1-3-1 ODC EW-1 Pump
OOR Switch
0 = On, 1 = Off, 2 =
Remote
EQU
Equal
Source A ODC_EW1_OOR_States
1
Source B 0

18

ODC EW-1 Maximum Speed
GRT
Greater Than (A>B)
Source A Process_Setpoints[26]
50.5
Source B 100

ODC EW-1 Maximum Speed
MOV
Move
Source 100
Dest Process_Setpoints[26]
50.5

ODC EW-1 Maximum Speed
LEQ
Less Than or Eql (A<=B)
Source A Process_Setpoints[26]
50.5
Source B Process_Setpoints[28]
50.0

ODC EW-1 PID
MOV
Move
Source Process_Setpoints[26]
50.5
Dest PID_ODC_EW1.MAXO
50.5

ODC EW-1 Minimum Speed
(stop SP)
LEQ
Less Than or Eql (A<=B)
Source A Process_Setpoints[28]
50.0
Source B 50.0

ODC EW-1 Minimum Speed
(stop SP)
MOV
Move
Source 50.0
Dest Process_Setpoints[28]
50.0

ODC EW-1 PID
MOV
Move
Source Process_Setpoints[28]
50.0
Dest PID_ODC_EW1.MINO
50.0

ODC EW-1 Pump VFD Speed
when OOR is in ON Positon
LEQ
Less Than or Eql (A<=B)
Source A Process_Setpoints[10]
50.5
Source B Process_Setpoints[28]
50.0

ODC EW-1 Pump VFD Speed
when OOR is in ON Positon
MOV
Move
Source Process_Setpoints[28]
50.0
Dest Process_Setpoints[10]
50.5

This the PID Loop for the ODC EW-1 pump.

19

ODC EW1 PID Loop Timer
PID_Loop_Timers[0].DN

P-1-3-1 ODC EW-1 Pump
OOR Switch
0 = On, 1 = Off, 2 =
Remote

EQU
Equal
Source A ODC_EW1_OOR_States
1
Source B 2

P-1-3-1 ODC EW-1 Pump
Remote Mode Selector
0=Manual, 1=Auto
Misc_Boolean_Tags_2.12

ODC EW-1 PID

PID
Proportional Integral Derivative
PID PID_ODC_EW1 ...
Process Variable Process_Setpoints[13]
Tieback 0
Control Variable Analog_Outputs_Real_1[1]
PID Master Loop PID_ODC_EW1
Inhold Bit 0
Inhold Value 0
Setpoint 576.0
Process Variable 576.2645
Output % 50.5

This rung is for bumpless auto to manual pump speed command.

20

ODC EW-1 PID
PID_ODC_EW1.SWM

ODC EW-1 Pump VFD Speed
when OOR is in ON Positon

MOV
Move
Source PID_ODC_EW1.SO
50.5
Dest Process_Setpoints[10]
50.5

21

This rung sets the pump manual command speed.

P-1-3-1 ODC EW-1 Pump OOR Switch 0 = On, 1 = Off, 2 = Remote
EQU
Equal
Source A ODC_EW1_OOR_States 1
Source B 2

P-1-3-1 ODC EW-1 Pump Remote Mode Selector 0=Manual, 1=Auto
Misc_Boolean_Tags_2.12

P-1-3-1 ODC EW-1 Pump Run Command
Discrete_Outputs_1.2

Pxxxx010301 - ODC EW-1 VFD Speed Command
MOV
Move
Source Process_Setpoints[10] 50.5
Dest Analog_Outputs_Real_1[1] 0.0

P-1-3-1 ODC EW-1 Pump OOR Switch 0 = On, 1 = Off, 2 = Remote
EQU
Equal
Source A ODC_EW1_OOR_States 1
Source B 0

22

This rung clears the pump command when not running.

P-1-3-1 ODC EW-1 Pump OOR Switch 0 = On, 1 = Off, 2 = Remote
EQU
Equal
Source A ODC_EW1_OOR_States 1
Source B 2

P-1-3-1 ODC EW-1 Pump Run Command
Discrete_Outputs_1.2

Pxxxx010301 - ODC EW-1 VFD Speed Command
CLR
Clear
Dest Analog_Outputs_Real_1[1] 0.0

P-1-3-1 ODC EW-1 Pump OOR Switch 0 = On, 1 = Off, 2 = Remote
EQU
Equal
Source A ODC_EW1_OOR_States 1
Source B 1

This rung scales the pump command to 4 mA to 20 mA.

23

CPT
Compute
Dest Local:11:O.Ch1Data
4.0
Expression Analog_Outputs_Real_1[1]*16.0/100.0+4.0

(End)

The next three rungs determine the positon of the switch on the front of the control panel
0 = "ON"
1 = "OFF"
2 = "REMOTE"

0

P-1-3-2 ODC EW-2 Pump Remote
Discrete_Inputs_1.14 [/]

P-1-3-2 ODC EW-2 Pump Running (AUX)
Discrete_Inputs_1.13 [ ]

P-1-3-2 ODC EW-2 Pump OOR Switch
0 = On, 1 = Off, 2 = Remote

MOV
Move
Source 0
Dest ODC_EW2_OOR_States 1

1

P-1-3-2 ODC EW-2 Pump Remote
Discrete_Inputs_1.14 [/]

P-1-3-2 ODC EW-2 Pump Running (AUX)
Discrete_Inputs_1.13 [/]

P-1-3-2 ODC EW-2 Pump OOR Switch
0 = On, 1 = Off, 2 = Remote

MOV
Move
Source 1
Dest ODC_EW2_OOR_States 1

2

P-1-3-2 ODC EW-2 Pump Remote
Discrete_Inputs_1.14 [ ]

P-1-3-2 ODC EW-2 Pump OOR Switch
0 = On, 1 = Off, 2 = Remote

MOV
Move
Source 2
Dest ODC_EW2_OOR_States 1

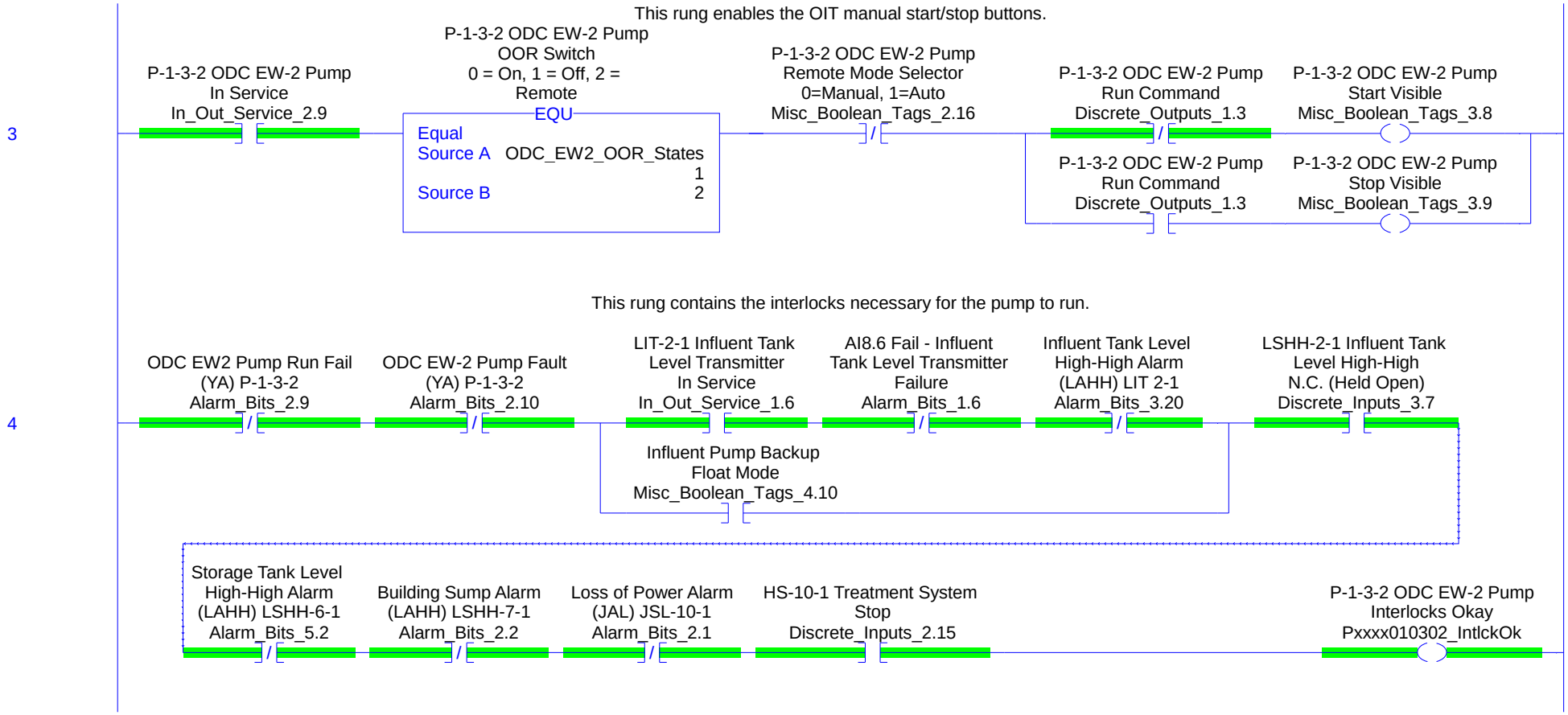
This rung enables the OIT manual start/stop buttons.
3
P-1-3-2 ODC EW-2 Pump In Service In_Out_Service_2.9
P-1-3-2 ODC EW-2 Pump OOR Switch 0 = On, 1 = Off, 2 = Remote
EQU
Equal
Source A ODC_EW2_OOR_States
1
Source B 2
P-1-3-2 ODC EW-2 Pump Remote Mode Selector 0=Manual, 1=Auto Misc_Boolean_Tags_2.16
P-1-3-2 ODC EW-2 Pump Run Command Discrete_Outputs_1.3
P-1-3-2 ODC EW-2 Pump Start Visible Misc_Boolean_Tags_3.8
P-1-3-2 ODC EW-2 Pump Run Command Discrete_Outputs_1.3
P-1-3-2 ODC EW-2 Pump Stop Visible Misc_Boolean_Tags_3.9
This rung contains the interlocks necessary for the pump to run.
4
ODC EW2 Pump Run Fail (YA) P-1-3-2 Alarm_Bits_2.9
ODC EW-2 Pump Fault (YA) P-1-3-2 Alarm_Bits_2.10
LIT-2-1 Influent Tank Level Transmitter In Service In_Out_Service_1.6
AI8.6 Fail - Influent Tank Level Transmitter Failure Alarm_Bits_1.6
Influent Tank Level High-High Alarm (LAHH) LIT 2-1 Alarm_Bits_3.20
LSHH-2-1 Influent Tank Level High-High N.C. (Held Open) Discrete_Inputs_3.7
Influent Pump Backup Float Mode Misc_Boolean_Tags_4.10
Storage Tank Level High-High Alarm (LAHH) LSHH-6-1 Alarm_Bits_5.2
Building Sump Alarm (LAHH) LSHH-7-1 Alarm_Bits_2.2
Loss of Power Alarm (JAL) JSL-10-1 Alarm_Bits_2.1
HS-10-1 Treatment System Stop Discrete_Inputs_2.15
P-1-3-2 ODC EW-2 Pump Interlocks Okay Pxxxx010302_IntlckOk

5

ODC EW-2
Level/Differential
Control 0=Differential
Misc_Boolean_Tags_2.19

ODC EW-2 PID
MOV
Move
Source Process_Setpoints[16]
576.0
Dest PID_ODC_EW2.SP
576.0

ODC EW-2 Pump PID Process
Variable
MOV
Move
Source ODC_Water_Level[3]
579.6214
Dest Process_Setpoints[18]
579.6234

ODC EW-2 PID
PID_ODC_EW2.CA

6

ODC EW-2
Level/Differential
Control 0=Differential
Misc_Boolean_Tags_2.19

ODC EW-2 PID
MOV
Move
Source Process_Setpoints[17]
1.0
Dest PID_ODC_EW2.SP
576.0

ODC EW-2 Pump PID Process
Variable
SUB
Subtract
Source A ODC_Water_Level[4]
0.0
Source B ODC_Water_Level[5]
579.59143
Dest Process_Setpoints[18]
579.6234

7

This rung calculates the start level for the pump.

ODC EW-2 Pump SP LEVEL START

ADD

Add	
Source A	Process_Setpoints[16] 576.0
Source B	2
Dest	Process_Setpoints[19] 578.0

8

This rung triggers the pump down latch based on operator level set points.

LT-1-3-4 ODC EW-2 Level Transmitter In Service
In_Out_Service_1.13

AI8.13 Fail - ODC Containment Cell EW-2 Level (Down Well) Transmitter 1 Failure
Alarm_Bits_1.13 /

ODC EW-2 Level/Differential Control 0=Differential
Misc_Boolean_Tags_2.19

ODC EW-2 Level/Differential Control 0=Differential
Misc_Boolean_Tags_2.19 /

LT-1-3-5 ODC EW-2 Level Transmitter In Service
In_Out_Service_1.14

AI8.14 Fail - ODC Containment Cell EW-2 Level (Outside Wall) Transmitter 2 Failure
Alarm_Bits_1.14 /

LT-1-3-6 ODC EW-2 Level Transmitter In Service
In_Out_Service_1.15

AI8.15 Fail - ODC Containment Cell EW-2 Level (Inside Wall) Transmitter 3 Failure
Alarm_Bits_1.15 /

ODC EW-2 Pump PID Process Variable
GRT
Greater Than (A>B)
Source A Process_Setpoints[18] 579.6234
Source B Process_Setpoints[17] 1.0

LT-1-3-4 Level (Outside Containment Cell, EW-2, Downwell) [1x ft elev.]
GRT
Greater Than (A>B)
Source A ODC_Water_Level[3] 579.6214
Source B Process_Setpoints[19] 578.0

ODC EW-2 PID
GRT
Greater Than (A>B)
Source A PID_ODC_EW2.OUT 88.0
Source B Process_Setpoints[30] 50.0

ODC EW-2 PDL (based on speed)
Misc_Boolean_Tags_3.26

LT-1-3-4 Level (Outside Containment Cell, EW-2, Downwell) [1x ft elev.]
GRT
Greater Than (A>B)
Source A ODC_Water_Level[3] 579.6214
Source B Process_Setpoints[16] 576.0

ODC EW-2 PDL (based on speed)
Misc_Boolean_Tags_3.26

9

This rung contains triggers the auto call-to-run logic based on receiving a request from the level controller.

P-1-3-2 ODC EW-2 Pump In Service
In_Out_Service_2.9

P-1-3-2 ODC EW-2 Pump Interlocks Okay
Pxxxx010302_IntlckOk

P-1-3-2 ODC EW-2 Pump OOR Switch 0 = On, 1 = Off, 2 = Remote

EQU
Equal
Source A ODC_EW2_OOR_States
Source B 1
2

P-1-3-2 ODC EW-2 Pump Remote Mode Selector 0=Manual, 1=Auto
Misc_Boolean_Tags_2.16

ODC EW-2 PDL (based on speed)
Misc_Boolean_Tags_3.26

P-1-3-2 ODC EW-2 Pump Low Flow Delay Timer
INT_T_Pxxxx010302_LowFlow.DN

AI8.4 Fail - ODC Containment Cell EW-2 Flow Transmitter Failure
Alarm_Bits_1.4

ODC EW-2 Flow Low-Low Alarm (FALL) FIT-1-3-2
Alarm_Bits_3.15

FIT-1-3-2 ODC EW-2 Flow Transmitter In Service
In_Out_Service_1.4

LT-1-3-4 ODC EW-2 Level Transmitter In Service
In_Out_Service_1.13

AI8.13 Fail - ODC Containment Cell EW-2 Level (Down Well) Transmitter 1 Failure
Alarm_Bits_1.13

ODC EW-2 Level Low-Low Alarm (LALL) LT-1-3-4
Alarm_Bits_4.19

Diffused Aeration Tank Level High-High Alarm (LAHH) LSHH-9-1
Alarm_Bits_5.3

M-9-1 Aeration Blower In Service
In_Out_Service_5.5

M-9-1 Aeration Blower Running (AUX)
Discrete_Inputs_3.2

P-1-3-2 ODC EW-2 Pump Auto Call-To-Run
Pxxxx010302_AutoCTR

10

This rung monitors pump flow, if pump flow drops below 0.5 gpm and starts a 60 second dwell timer.

FIT-1-3-2 ODC EW-2 Flow Transmitter In Service
In_Out_Service_1.4

AI8.4 Fail - ODC Containment Cell EW-2 Flow Transmitter Failure
Alarm_Bits_1.4

P-1-3-2 ODC EW-2 Pump Auto Call-To-Run
Pxxxx010302_AutoCTR

P-1-3-2 ODC EW-2 Pump Running (AUX)
Discrete_Inputs_1.13

FIT-1-3-2 ODC Containment Cell EW-2 Flow Transmitter Scaled Value [1x gpm]

LES
Less Than (A<B)
Source A Analog_Inputs_Real_1[4] 0.0
Source B 0.5

P-1-3-2 ODC EW-2 Pump Low Flow Delay Timer
INT_T_Pxxxx010302_LowFlow.DN

P-1-3-2 ODC EW-2 Pump Well Recovery Timer
INT_T_Pxxxx010302_WellRecover.DN

P-1-3-2 ODC EW-2 Pump Low Flow Delay Timer

MUL
Multiply
Source A 60
Source B 1000
Dest INT_T_Pxxxx010302_LowFlow.PRE 60000

P-1-3-2 ODC EW-2 Pump Low Flow Delay Timer

TON
Timer On Delay
Timer INT_T_Pxxxx010302_LowFlow
Preset 60000
Accum 0
EN
DN

11

This rung starts the well recovery timer once a low flow condition has been detected which the low flow latch after 30 minutes.

FIT-1-3-2 ODC EW-2 Flow Transmitter In Service
In_Out_Service_1.4

AI8.4 Fail - ODC Containment Cell EW-2 Flow Transmitter Failure
Alarm_Bits_1.4

P-1-3-2 ODC EW-2 Pump Low Flow Delay Timer
INT_T_Pxxxx010302_LowFlow.DN

P-1-3-2 ODC EW-2 Pump Well Recovery Timer
MUL
Multiply
Source A 30
Source B 60000
Dest INT_T_Pxxxx010302_WellRecover.PRE
1800000

P-1-3-2 ODC EW-2 Pump Well Recovery Timer
TON
Timer On Delay
Timer INT_T_Pxxxx010302_WellRecover
Preset 1800000
Accum 0
EN
DN

P-1-3-2 ODC EW-2 Pump Low Flow Recovery Delay
Pxxxx010302_LowFlowRecv

12

This rung starts the pump restart delay timer.

P-1-3-2 ODC EW-2 Pump DELAY TIMER
CPT
Compute
Dest DelayDwell_Timers[6].PRE 288000
Expression DwellDelay_Timer_Setpoints[6]*1000

P-1-3-2 ODC EW-2 Pump Running (AUX) Discrete_Inputs_1.13

P-1-3-2 ODC EW-2 Pump DELAY TIMER DelayDwell_Timers[6].TT

P-1-3-2 ODC EW-2 Pump DELAY TIMER
TON
Timer On Delay
Timer DelayDwell_Timers[6]
Preset 288000
Accum 0
EN
DN

P-1-3-2 ODC EW-2 Pump DELAY TIMER DelayDwell_Timers[6].TT

P-1-3-2 ODC EW-2 Pump Running (AUX) Discrete_Inputs_1.13 /

P-1-3-2 ODC EW-2 Pump Re-Start Delay Pxxxx010302_RestartDelay

13

This rung starts the pump dwell on timer.

P-1-3-2 ODC EW-2 Pump DWELL TIMER
CPT
Compute
Dest DelayDwell_Timers[7].PRE 60000
Expression DwellDelay_Timer_Setpoints[7]*1000

P-1-3-2 ODC EW-2 Pump Running (AUX) Discrete_Inputs_1.13

P-1-3-2 ODC EW-2 Pump DWELL TIMER DelayDwell_Timers[7].TT

P-1-3-2 ODC EW-2 Pump DWELL TIMER
TON
Timer On Delay
Timer DelayDwell_Timers[7]
Preset 60000
Accum 0
EN
DN

P-1-3-2 ODC EW-2 Pump DWELL TIMER DelayDwell_Timers[7].TT

P-1-3-2 ODC EW-2 Pump Minimum Runtime Dwell Pxxxx010302_MinRunDwell

14

This rung activates the pump run output.

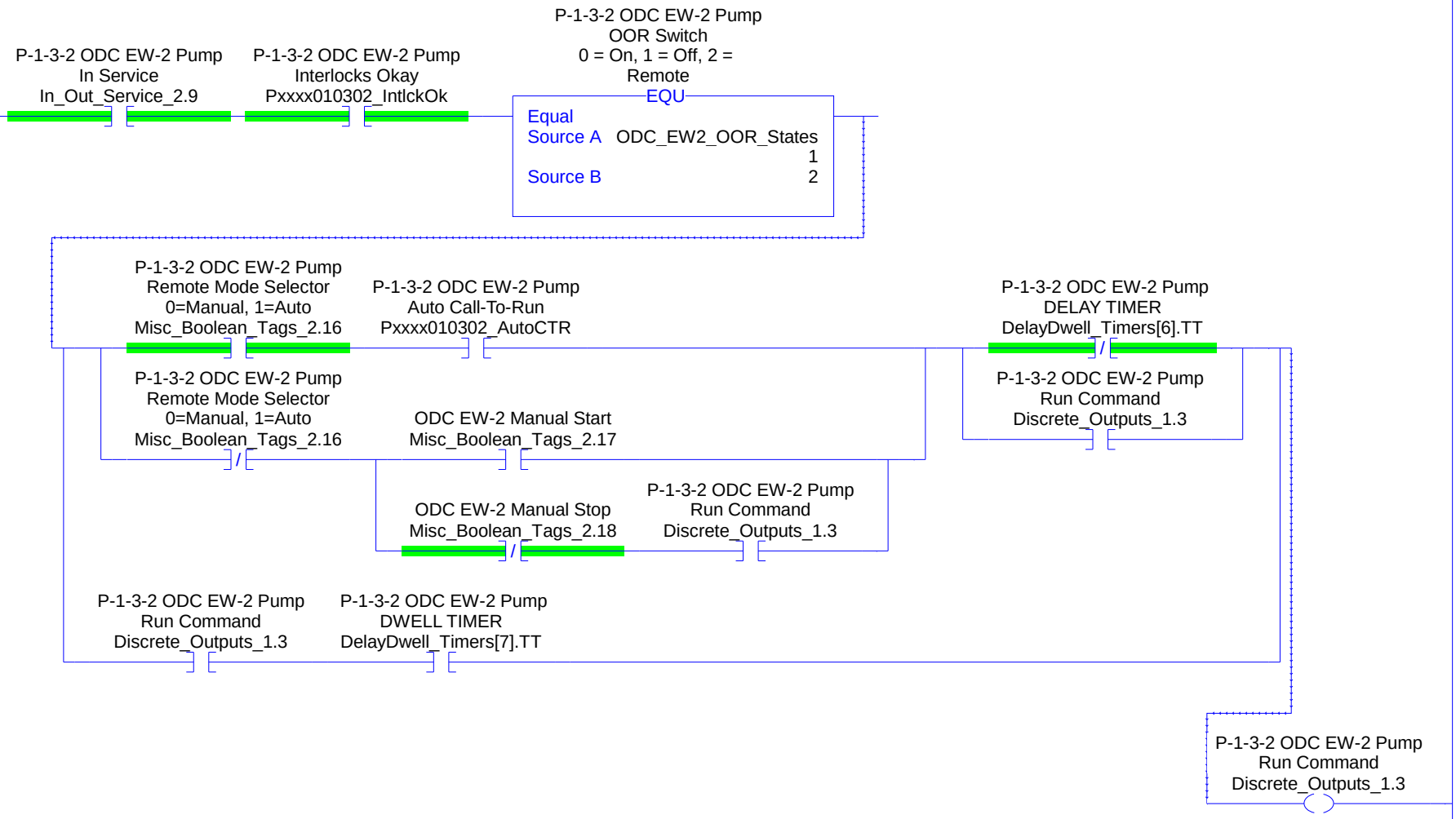

This rung enables updating of the PID every 50 milliseconds.

15

ODC EW2 PID Loop Timer
PID_Loop_Timers[1].DN

ODC EW2 PID Loop Timer
TON
Timer On Delay
Timer PID_Loop_Timers[1]
Preset 50
Accum 26
EN
DN

This rung disables the PID tieback mode.

16

ODC EW-2 PID
PID_ODC_EW2.MO
U

This rung switches the PID to manual mode.

17

P-1-3-2 ODC EW-2 Pump
OOR Switch
0 = On, 1 = Off, 2 =
Remote
EQU
Equal
Source A ODC_EW2_OOR_States
1
Source B 2

P-1-3-2 ODC EW-2 Pump
OOR Switch
0 = On, 1 = Off, 2 =
Remote
EQU
Equal
Source A ODC_EW2_OOR_States
1
Source B 0

P-1-3-2 ODC EW-2 Pump
Remote Mode Selector
0=Manual, 1=Auto
Misc_Boolean_Tags_2.16

ODC EW-2 PID
PID_ODC_EW2.SWM

ODC EW-2 PID
MOV
Move
Source Process_Setpoints[15]
88.0
Dest PID_ODC_EW2.SO
88.0

18

ODC EW-2 Maximum Speed
GRT
Greater Than (A>B)
Source A Process_Setpoints[27] 88.0
Source B 100

ODC EW-2 Maximum Speed
MOV
Move
Source 100
Dest Process_Setpoints[27] 88.0

ODC EW-2 Maximum Speed
LEQ
Less Than or Eql (A<=B)
Source A Process_Setpoints[27] 88.0
Source B Process_Setpoints[30] 50.0

ODC EW-2 PID
MOV
Move
Source Process_Setpoints[27] 88.0
Dest PID_ODC_EW2.MAXO 88.0

ODC EW-2 Minimum Speed (stop SP)
LEQ
Less Than or Eql (A<=B)
Source A Process_Setpoints[30] 50.0
Source B 50.0

ODC EW-2 Minimum Speed (stop SP)
MOV
Move
Source 50.0
Dest Process_Setpoints[30] 50.0

ODC EW-1 PID
MOV
Move
Source Process_Setpoints[30] 50.0
Dest PID_ODC_EW1.MINO 50.0

ODC EW-2 Pump VFD Speed when OOR is in ON Position
LEQ
Less Than or Eql (A<=B)
Source A Process_Setpoints[15] 88.0
Source B Process_Setpoints[30] 50.0

ODC EW-2 Pump VFD Speed when OOR is in ON Position
MOV
Move
Source Process_Setpoints[30] 50.0
Dest Process_Setpoints[15] 88.0

19

This the PID Loop for the ODC EW-2 pump.

ODC EW2 PID Loop Timer
PID_Loop_Timers[1].DN

P-1-3-2 ODC EW-2 Pump OOR Switch 0 = On, 1 = Off, 2 = Remote

EQU
Equal
Source A ODC_EW2_OOR_States
1
Source B 2

P-1-3-2 ODC EW-2 Pump Remote Mode Selector 0=Manual, 1=Auto
Misc_Boolean_Tags_2.16

ODC EW-2 PID

PID
Proportional Integral Derivative

PID	PID_ODC_EW2 ...
Process Variable	Process_Setpoints[18]
Tieback	0
Control Variable	Analog_Outputs_Real_1[2]
PID Master Loop	PID_ODC_EW2
Inhold Bit	0
Inhold Value	0
Setpoint	576.0
Process Variable	579.25635
Output %	88.0

20

This rung is for bumpless auto to manual pump speed command.

ODC EW-2 PID
PID_ODC_EW2.SWM

ODC EW-2 Pump VFD Speed when OOR is in ON Position

MOV
Move
Source PID_ODC_EW2.SO
88.0
Dest Process_Setpoints[15]
88.0

21

This rung sets the pump manual command speed.

P-1-3-2 ODC EW-2 Pump OOR Switch 0 = On, 1 = Off, 2 = Remote
EQU
Equal
Source A ODC_EW2_OOR_States 1
Source B 2

P-1-3-2 ODC EW-2 Pump Remote Mode Selector 0=Manual, 1=Auto
Misc_Boolean_Tags_2.16

P-1-3-2 ODC EW-2 Pump Run Command
Discrete_Outputs_1.3

Pxxxx010302 - ODC EW-2 VFD Speed Command
MOV
Move
Source Process_Setpoints[15] 88.0
Dest Analog_Outputs_Real_1[2] 0.0

P-1-3-2 ODC EW-2 Pump OOR Switch 0 = On, 1 = Off, 2 = Remote
EQU
Equal
Source A ODC_EW2_OOR_States 1
Source B 0

22

This rung clears the pump command when not running.

P-1-3-2 ODC EW-2 Pump OOR Switch 0 = On, 1 = Off, 2 = Remote
EQU
Equal
Source A ODC_EW2_OOR_States 1
Source B 2

P-1-3-2 ODC EW-2 Pump Run Command
Discrete_Outputs_1.3

Pxxxx010302 - ODC EW-2 VFD Speed Command
CLR
Clear
Dest Analog_Outputs_Real_1[2] 0.0

P-1-3-2 ODC EW-2 Pump OOR Switch 0 = On, 1 = Off, 2 = Remote
EQU
Equal
Source A ODC_EW2_OOR_States 1
Source B 1

This rung scales the pump command to 4 mA to 20 mA.

23

CPT
Compute
Dest Local:11:O.Ch2Data
4.0
Expression Analog_Outputs_Real_1[2]*16.0/100.0+4.0

(End)

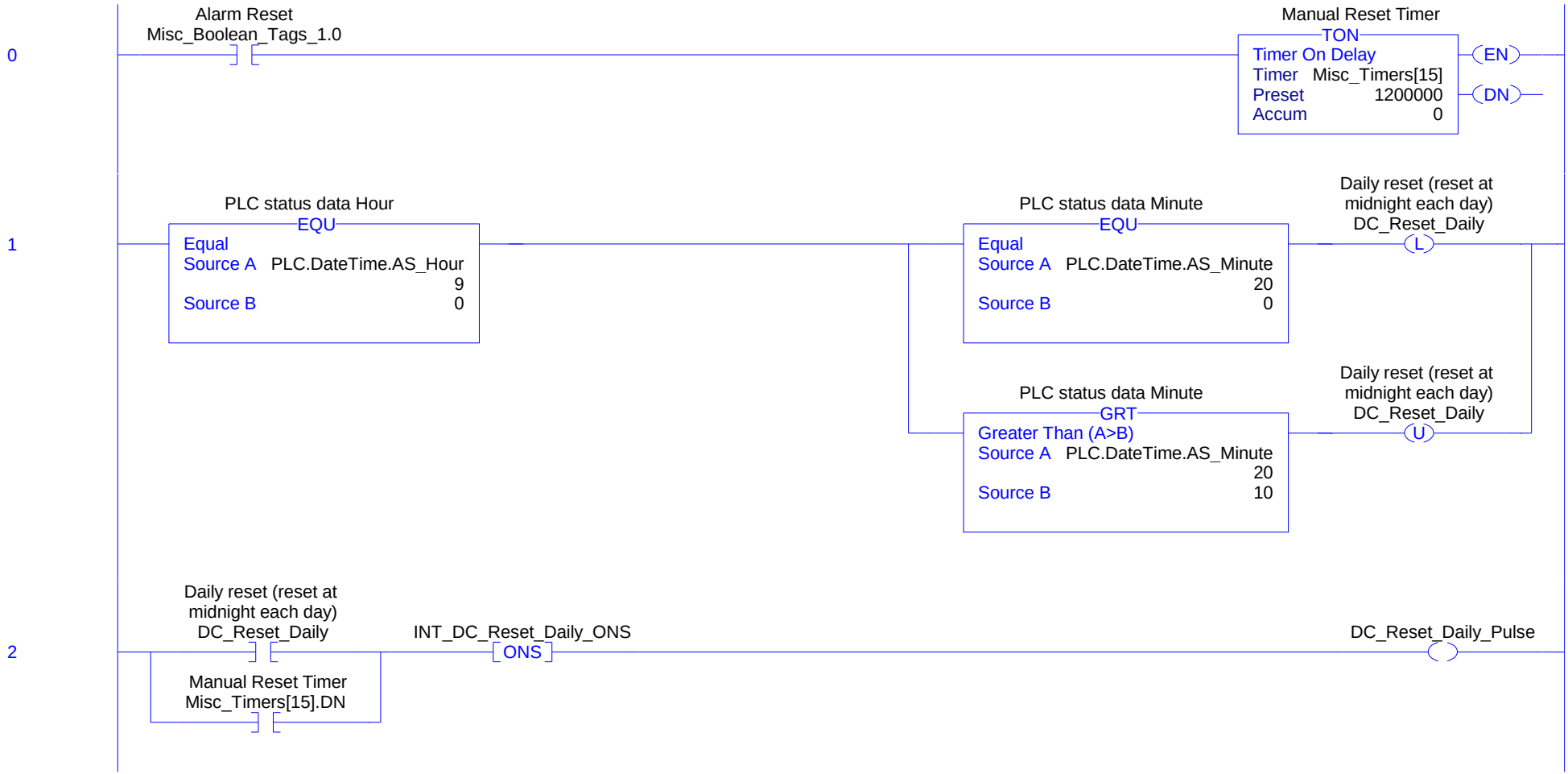
0
Alarm Reset
Misc_Boolean_Tags_1.0
Manual Reset Timer
TON
Timer On Delay
Timer Misc_Timers[15]
Preset 1200000
Accum 0
EN
DN
1
PLC status data Hour
EQU
Equal
Source A PLC.DateTime.AS_Hour
9
Source B 0
PLC status data Minute
EQU
Equal
Source A PLC.DateTime.AS_Minute
20
Source B 0
Daily reset (reset at midnight each day)
DC_Reset_Daily
L
PLC status data Minute
GRT
Greater Than (A>B)
Source A PLC.DateTime.AS_Minute
20
Source B 10
Daily reset (reset at midnight each day)
DC_Reset_Daily
U
2
Daily reset (reset at midnight each day)
DC_Reset_Daily
Manual Reset Timer
Misc_Timers[15].DN
INT_DC_Reset_Daily_ONS
ONS
DC_Reset_Daily_Pulse

3

PLC status data Day of Week
EQU
Equal
Source A PLC.DateTime.AS_DayOfWeek
5
Source B 1

PLC status data Hour
EQU
Equal
Source A PLC.DateTime.AS_Hour
9
Source B 0

PLC status data Minute
EQU
Equal
Source A PLC.DateTime.AS_Minute
20
Source B 0

Weekly reset (reset midnight last day of week)
DC_Reset_Weekly
(L)

PLC status data Minute
GRT
Greater Than (A>B)
Source A PLC.DateTime.AS_Minute
20
Source B 10

Weekly reset (reset midnight last day of week)
DC_Reset_Weekly
(U)

4

Weekly reset (reset midnight last day of week)
DC_Reset_Weekly

Manual Reset Timer
Misc_Timers[15].DN

INT_DC_Reset_Weekly_ONS
[ONS]

DC_Reset_Weekly_Pulse
( )

5

PLC status data Day
EQU
Equal
Source A PLC.DateTime.AS_Day
20
Source B 1

PLC status data Hour
EQU
Equal
Source A PLC.DateTime.AS_Hour
9
Source B 0

PLC status data Minute
EQU
Equal
Source A PLC.DateTime.AS_Minute
20
Source B 0

Monthly reset (reset midnight last day of month)
DC_Reset_Monthly
L

PLC status data Minute
GRT
Greater Than (A>B)
Source A PLC.DateTime.AS_Minute
20
Source B 10

Monthly reset (reset midnight last day of month)
DC_Reset_Monthly
U

6

Monthly reset (reset midnight last day of month)
DC_Reset_Monthly

Manual Reset Timer
Misc_Timers[15].DN

INT_DC_Reset_Monthly_ONS
ONS

DC_Reset_Monthly_Pulse

7

PLC status data Month
EQU
Equal
Source A PLC.DateTime.AS_Month
11
Source B 1

PLC status data Hour
EQU
Equal
Source A PLC.DateTime.AS_Hour
9
Source B 0

PLC status data Minute
EQU
Equal
Source A PLC.DateTime.AS_Minute
20
Source B 0

Yearly reset (reset midnight last day of year)
DC_Reset_Yearly
L

PLC status data Minute
GRT
Greater Than (A>B)
Source A PLC.DateTime.AS_Minute
20
Source B 10

Yearly reset (reset midnight last day of year)
DC_Reset_Yearly
U

8

Yearly reset (reset midnight last day of year)
DC_Reset_Yearly

Manual Reset Timer
Misc_Timers[15].DN

INT_DC_Reset_Yearly_ONS
ONS

DC_Reset_Yearly_Pulse

(End)

The next three rungs determine the positon of the switch on the front of the control panel
0 = "ON"
1 = "OFF"
2 = "REMOTE"

0

P-8-1 Chemical Feed Pump Remote
Discrete_Inputs_3.5
]/[

P-8-1 Chemical Feed Pump Run (Request) AUX
Discrete_Inputs_3.6
] [

Chemical Feed Pump OOR Switch
0 = On, 1 = Off, 2 = Remote
MOV
Move Source 0
Dest CHEM_PUMP_OOR_States 2

1

P-8-1 Chemical Feed Pump Remote
Discrete_Inputs_3.5
]/[

P-8-1 Chemical Feed Pump Run (Request) AUX
Discrete_Inputs_3.6
]/[

Chemical Feed Pump OOR Switch
0 = On, 1 = Off, 2 = Remote
MOV
Move Source 1
Dest CHEM_PUMP_OOR_States 2

2

P-8-1 Chemical Feed Pump Remote
Discrete_Inputs_3.5
] [

Chemical Feed Pump OOR Switch
0 = On, 1 = Off, 2 = Remote
MOV
Move Source 2
Dest CHEM_PUMP_OOR_States 2

This rung enables the OIT manual start/stop buttons.

3

Chemical Feed Pump OOR Switch 0 = On, 1 = Off, 2 = Remote
EQU
Equal
Source A CHEM_PUMP_OOR_States 2
Source B 2

Chemical Feed Pump Remote Mode Selector 0=Manual, 1=Auto Misc_Boolean_Tags_4.4 /

Chemical Feed Pump Run Command Discrete_Outputs_1.9 /
Chemical Feed Pump Start Visible Misc_Boolean_Tags_3.16

Chemical Feed Pump Run Command Discrete_Outputs_1.9
Chemical Feed Pump Stop Visible Misc_Boolean_Tags_3.17

This rung contains the interlocks necessary for the pump to run.

4

LIT-2-1 Influent Tank Level Transmitter In Service In_Out_Service_1.6
AI8.6 Fail - Influent Tank Level Transmitter Failure Alarm_Bits_1.6 /
Influent Tank Level High-High Alarm (LAHH) LIT 2-1 Alarm_Bits_3.20 /
LSHH-2-1 Influent Tank Level High-High N.C. (Held Open) Discrete_Inputs_3.7
Storage Tank Level High-High Alarm (LAHH) LSHH-6-1 Alarm_Bits_5.2 /
Building Sump Alarm (LAHH) LSHH-7-1 Alarm_Bits_2.2 /

Influent Pump Backup Float Mode Misc_Boolean_Tags_4.10

Loss of Power Alarm (JAL) JSL-10-1 Alarm_Bits_2.1 /
HS-10-1 Treatment System Stop Discrete_Inputs_2.15
P-8-1 Chemical Feed Pump Interlocks Okay Pxxxx080100_IntlckOk

This rung calculates the chemical pacing flow.

5

Combined Influent Flow Rate for Chemical Pacing
CPT
Compute
Dest Flow_Rate[0] 0.0
Expression Analog_Inputs_Real_1[1]+Analog_Inputs_Real_1[2]+Analog_Inputs_Real_1[3]+Analog_Inputs_Real_1[4]

6

This rung contains triggers the auto call-to-run logic based on receiving a request from the extraction wells.

P-8-1 Chemical Feed Pump Interlocks Okay
Pxxxx080100_IntlckOk

Chemical Feed Pump OOR Switch 0 = On, 1 = Off, 2 = Remote

EQU
Equal
Source A CHEM_PUMP_OOR_States
2
Source B 2

Chemical Feed Pump Remote Mode Selector 0=Manual, 1=Auto
Misc_Boolean_Tags_4.4

P-1-1-1 WCC EW-1 Pump Running (AUX)
Discrete_Inputs_1.4

P-1-1-2 WCC EW-2 Pump Running (AUX)
Discrete_Inputs_1.7

P-1-3-1 ODC EW-1 Pump Running (AUX)
Discrete_Inputs_1.10

P-1-3-2 ODC EW-2 Pump Running (AUX)
Discrete_Inputs_1.13

P-1-2 CF Sump Pump Running (AUX)
Discrete_Inputs_2.0

Combined Influent Flow Rate for Chemical Pacing

GRT
Greater Than (A>B)
Source A Flow_Rate[0]
0.0
Source B 0.25

AI8.1 Fail - West Containment Cell Flow Transmitter Failure
Alarm_Bits_1.1

AI8.2 Fail - Consolidation Facility Flow Transmitter Failure
Alarm_Bits_1.2

AI8.3 Fail - ODC Containment Cell EW-1 Flow Transmitter Failure
Alarm_Bits_1.3

AI8.4 Fail - ODC Containment Cell EW-2 Flow Transmitter Failure
Alarm_Bits_1.4

P-8-1 Chemical Feed Pump Auto Call-To-Run
Pxxxx080100_AutoCTR

7

This rung starts the pump restart delay timer.

Chem. Feed Pump DELAY TIMER
CPT
Compute
Dest DelayDwell_Timers[14].PRE 10000
Expression DwellDelay_Timer_Setpoints[14]*1000

P-8-1 Chemical Feed Pump Run (Request) AUX Discrete_Inputs_3.6

Chem. Feed Pump DELAY TIMER DelayDwell_Timers[14].TT

Chem. Feed Pump DELAY TIMER
TON
Timer On Delay
Timer DelayDwell_Timers[14]
Preset 10000
Accum 0
EN
DN

Chem. Feed Pump DELAY TIMER DelayDwell_Timers[14].TT

P-8-1 Chemical Feed Pump Run (Request) AUX Discrete_Inputs_3.6

P-8-1 Chemical Feed Pump Re-Start Delay Pxxxx080100_RestartDelay

8

This rung starts the pump dwell on timer.

Chem. Feed Pump DWELL TIMER
CPT
Compute
Dest DelayDwell_Timers[15].PRE 0
Expression DwellDelay_Timer_Setpoints[15]*1000

P-8-1 Chemical Feed Pump Run (Request) AUX Discrete_Inputs_3.6

Chem. Feed Pump DWELL TIMER DelayDwell_Timers[15].TT

Chem. Feed Pump DWELL TIMER
TON
Timer On Delay
Timer DelayDwell_Timers[15]
Preset 0
Accum 0
EN
DN

Chem. Feed Pump DWELL TIMER DelayDwell_Timers[15].TT

P-8-1 Chemical Feed Pump Minimum Runtime Dwell Pxxxx080100_MinRunDwell

This rung activates the pump run output.

9

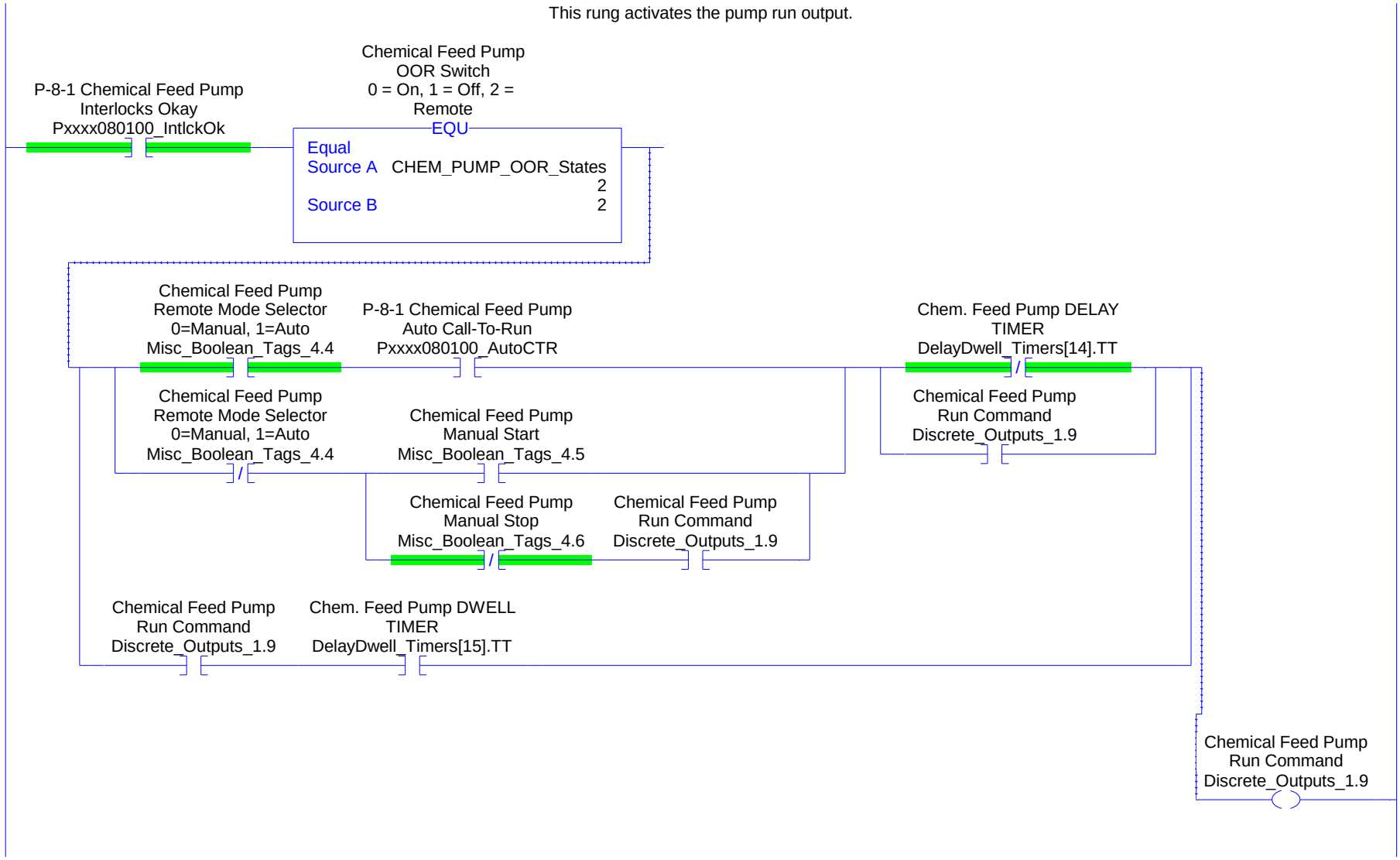

This rung sets the chemical feed pump auto command speed.

10

Chemical Feed Pump OOR Switch 0 = On, 1 = Off, 2 = Remote

EQU
Equal
Source A CHEM_PUMP_OOR_States
2
Source B 2

Chemical Feed Pump Remote Mode Selector 0=Manual, 1=Auto
Misc_Boolean_Tags_4.4

Chemical Feed Pump Run Command
Discrete_Outputs_1.9

Chemical Feed Pump Speed Command

CPT
Compute
Dest Analog_Outputs_Real_1[3]
0.0
Expression Flow_Rate[0]*Flow_Rate[2]

This rung sets the chemical feed pump manual command speed.

11

Chemical Feed Pump OOR Switch 0 = On, 1 = Off, 2 = Remote

EQU
Equal
Source A CHEM_PUMP_OOR_States
2
Source B 2

Chemical Feed Pump OOR Switch 0 = On, 1 = Off, 2 = Remote

EQU
Equal
Source A CHEM_PUMP_OOR_States
2
Source B 0

Chemical Feed Pump Remote Mode Selector 0=Manual, 1=Auto
Misc_Boolean_Tags_4.4

Chemical Feed Pump Run Command
Discrete_Outputs_1.9

Chemical Feed Pump Speed Command

MOV
Move
Source Flow_Rate[1]
2.0
Dest Analog_Outputs_Real_1[3]
0.0

This rung clears the chemical feed pump command when not running.

12

Chemical Feed Pump OOR Switch 0 = On, 1 = Off, 2 = Remote

EQU
Equal
Source A CHEM_PUMP_OOR_States 2
Source B 2

Chemical Feed Pump Run Command Discrete_Outputs_1.9

Chemical Feed Pump Speed Command

CLR
Clear
Dest Analog_Outputs_Real_1[3] 0.0

Chemical Feed Pump OOR Switch 0 = On, 1 = Off, 2 = Remote

EQU
Equal
Source A CHEM_PUMP_OOR_States 2
Source B 1

This rung scales the chemical feed pump command to 4 mA to 20 mA.

13

CPT
Compute
Dest Local:11:O.Ch3Data 4.0
Expression Analog_Outputs_Real_1[3]*16.0/100.0+4.0

(End)

The next three rungs determine the positon of the switch on the front of the control panel
0 = "ON"
1 = "OFF"
2 = "REMOTE"

0

M-9-1 Aeration Blower Remote
Discrete_Inputs_3.3

M-9-1 Aeration Blower Running (AUX)
Discrete_Inputs_3.2

DTA Blower OOR Switch
0 = On, 1 = Off, 2 = Remote

MOV
Move
Source 0
Dest DTA_BLOWER_OOR_States[1]

1

M-9-1 Aeration Blower Remote
Discrete_Inputs_3.3

M-9-1 Aeration Blower Running (AUX)
Discrete_Inputs_3.2

DTA Blower OOR Switch
0 = On, 1 = Off, 2 = Remote

MOV
Move
Source 1
Dest DTA_BLOWER_OOR_States[1]

2

M-9-1 Aeration Blower Remote
Discrete_Inputs_3.3

DTA Blower OOR Switch
0 = On, 1 = Off, 2 = Remote

MOV
Move
Source 2
Dest DTA_BLOWER_OOR_States[1]

This rung enables the OIT manual start/stop buttons.

3

M-9-1 Aeration Blower In Service In_Out_Service_5.5

DTA Blower OOR Switch 0 = On, 1 = Off, 2 = Remote

EQU
Equal
Source A DTA_BLOWER_OOR_States 1
Source B 2

DTA Blower Remote Mode Selector 0=Manual, 1=Auto Misc_Boolean_Tags_4.0 /

DTA Blower Run Command Discrete_Outputs_1.8 /

DTA Blower Start Visible Misc_Boolean_Tags_3.14 ( )

DTA Blower Run Command Discrete_Outputs_1.8

DTA Blower Stop Visible Misc_Boolean_Tags_3.15 ( )

This rung contains the interlocks necessary for the blower to run.

4

Aeration Blower Run Fail (YA) M-9-1 Alarm_Bits_5.6 /

Aeration Blower Fail (YA) M-9-1 Alarm_Bits_5.5 /

Loss of Power Alarm (JAL) JSL-10-1 Alarm_Bits_2.1 /

HS-10-1 Treatment System Stop Discrete_Inputs_2.15

M-9-1 Aeration Blower Interlocks Okay Mxxxx090100_IntlckOk ( )

5

Diffused Aeration Tank Level High-High Alarm (LAHH) LSHH-9-1 Alarm_Bits_5.3 /

LIT-2-1 Influent Tank Level Transmitter In Service In_Out_Service_1.6

AI8.6 Fail - Influent Tank Level Transmitter Failure Alarm_Bits_1.6 /

Influent Tank Level High-High Alarm (LAHH) LIT 2-1 Alarm_Bits_3.20 /

Influent Pump Backup Float Mode Misc_Boolean_Tags_4.10

LSHH-2-1 Influent Tank Level High-High N.C. (Held Open) Discrete_Inputs_3.7

Storage Tank Level High-High Alarm (LAHH) LSHH-6-1 Alarm_Bits_5.2 /

Building Sump Alarm (LAHH) LSHH-7-1 Alarm_Bits_2.2 /

DAT Equipment Off Permissive Misc_Boolean_Tags_4.31 ( )

6

DAT Equipment Off Permissive Misc_Boolean_Tags_4.31 /

DTA Blower Alarm Off Delay Timer

TON
Timer On Delay
Timer DTA_Blower_Timers[0]
Preset 300000
Accum 0

EN
DN

7

This rung contains triggers the auto call-to-run logic based on receiving a request from the extraction wells.

M-9-1 Aeration Blower In Service In_Out_Service_5.5

M-9-1 Aeration Blower Interlocks Okay Mxxxx090100_IntlckOk

DTA Blower OOR Switch 0 = On, 1 = Off, 2 = Remote

EQU
Equal
Source A DTA_BLOWER_OOR_States
1
Source B 2

DTA Blower Alarm Off Delay Timer DTA_Blower_Timers[0].DN

Building Sump Alarm (LAHH) LSHH-7-1 Alarm_Bits_2.2

Aeration Blower Pressure Diff. Low Alarm (PDAL) PDSL-9-1 Alarm_Bits_5.4

M-9-1 Aeration Blower Auto Call-To-Run Mxxxx090100_AutoCTR

8

This rung starts the blower restart delay timer.

Aer. Blower DELAY TIMER

CPT
Compute
Dest DelayDwell_Timers[12].PRE
360000
Expression DwellDelay_Timer_Setpoints[12]*1000

M-9-1 Aeration Blower Running (AUX) Discrete_Inputs_3.2

Aer. Blower DELAY TIMER DelayDwell_Timers[12].TT

Aer. Blower DELAY TIMER

TON
Timer On Delay
Timer DelayDwell_Timers[12]
Preset 360000
Accum 0

EN

DN

Aer. Blower DELAY TIMER DelayDwell_Timers[12].TT

M-9-1 Aeration Blower Running (AUX) Discrete_Inputs_3.2

M-9-1 Aeration Blower Minimum Runtime Dwell Mxxxx090100_RestartDelay

9

This rung starts the blower dwell on timer.

Aer. Blower DWELL TIMER
CPT
Compute
Dest DelayDwell_Timers[13].PRE
0
Expression DwellDelay_Timer_Setpoints[13]*1000

M-9-1 Aeration Blower
Running (AUX)
Discrete_Inputs_3.2

Aer. Blower DWELL TIMER
DelayDwell_Timers[13].TT

Aer. Blower DWELL TIMER
TON
Timer On Delay
Timer DelayDwell_Timers[13]
Preset 0
Accum 0
EN
DN

Aer. Blower DWELL TIMER
DelayDwell_Timers[13].TT

M-9-1 Aeration Blower
Re-Start Delay
Mxxxx090100_MinRunDwell

This rung activates the blower run output.

10

M-9-1 Aeration Blower In Service In_Out_Service_5.5

M-9-1 Aeration Blower Interlocks Okay Mxxxx090100_IntlckOk

DTA Blower OOR Switch 0 = On, 1 = Off, 2 = Remote

EQU
Equal
Source A DTA_BLOWER_OOR_States
1
Source B 2

DTA Blower Remote Mode Selector 0=Manual, 1=Auto Misc_Boolean_Tags_4.0

M-9-1 Aeration Blower Auto Call-To-Run Mxxxx090100_AutoCTR

Aer. Blower DELAY TIMER DelayDwell_Timers[12].TT

DTA Blower Run Command Discrete_Outputs_1.8

DTA Blower Remote Mode Selector 0=Manual, 1=Auto Misc_Boolean_Tags_4.0

DTA Blower Manual Start Misc_Boolean_Tags_4.1

DTA Blower Manual Stop Misc_Boolean_Tags_4.2

DTA Blower Run Command Discrete_Outputs_1.8

DTA Blower Run Command Discrete_Outputs_1.8

Aer. Blower DWELL TIMER DelayDwell_Timers[13].TT

DTA Blower Run Command Discrete_Outputs_1.8

(End)

The next three rungs determine the positon of the switch on the front of the control panel
0 = "ON"
1 = "OFF"
2 = "REMOTE"

0

P-2-1 Influent Tank Pump Remote Discrete_Inputs_2.7 [/]
P-2-1 Influent Tank Pump Running (AUX) Discrete_Inputs_2.6

P-2-1 Influent Tank Pump OOR Switch 0 = On, 1 = Off, 2 = Remote
MOV
Move Source 0
Dest Influent_Pump_OOR_States 1

1

P-2-1 Influent Tank Pump Running (AUX) Discrete_Inputs_2.6 [/]

P-2-1 Influent Tank Pump OOR Switch 0 = On, 1 = Off, 2 = Remote
MOV
Move Source 1
Dest Influent_Pump_OOR_States 1

2

P-2-1 Influent Tank Pump Remote Discrete_Inputs_2.7

P-2-1 Influent Tank Pump OOR Switch 0 = On, 1 = Off, 2 = Remote
MOV
Move Source 2
Dest Influent_Pump_OOR_States 1

3

This rung enables the OIT manual start/stop buttons.

P-2-1 Influent Tank Pump In Service
In_Out_Service_2.13

P-2-1 Influent Tank Pump OOR Switch 0 = On, 1 = Off, 2 = Remote

EQU
Equal
Source A Influent_Pump_OOR_States 1
Source B 2

Influent Pump Remote Auto/Manual Selector
Misc_Boolean_Tags_2.20

Influent Tank Pump Run Command
Discrete_Outputs_1.6

Influent Pump Start Visible
Misc_Boolean_Tags_3.10

Influent Tank Pump Run Command
Discrete_Outputs_1.6

Influent Pump Stop Visible
Misc_Boolean_Tags_3.11

4

This rung contains the interlocks necessary for the pump to run.

Influent Tank Pump Run Fail (YA) P-2-1
Alarm_Bits_2.13

Influent Tank Pump Fail (YA) P-2-1
Alarm_Bits_2.14

AI9.0 Fail - Cartridge Filter Pressure Diff. Transmitter Failure
Alarm_Bits_1.16

Cartridge Filter Pressure Diff. High Alarm (PDAH) PDIT-3-1
Alarm_Bits_4.28

AI9.1 Fail - GAC 1 Pressure Diff. Transmitter Failure
Alarm_Bits_1.17

GAC Filter 1 Pressure Diff. High Alarm (PDAH) PDIT-4-1
Alarm_Bits_4.30

AI9.2 Fail - GAC 2 Pressure Diff. Transmitter Failure
Alarm_Bits_1.18

GAC Filter 2 Pressure Diff. High Alarm (PDAH) PDIT-4-2
Alarm_Bits_5.0

Storage Tank Level High-High Alarm (LAHH) LSHH-6-1
Alarm_Bits_5.2

Building Sump Alarm (LAHH) LSHH-7-1
Alarm_Bits_2.2

Loss of Power Alarm (JAL) JSL-10-1
Alarm_Bits_2.1

HS-10-1 Treatment System Stop
Discrete_Inputs_2.15

P-2-1 Influent Tank Pump Interlocks Okay
Pxxxx020100_IntlckOk

5

Floats are fail safe, so a broken wire or loss of power triggersthe signal. The LSHH is normally closed and opens when the level reaches its highest level trip point, triggering the pump down latch. The LSLL is normally open and opens when the level is at its lowest level trip point, clearing the pump down latch.

LSHH-2-1 Influent Tank Level High-High N.C. (Held Open)
Discrete_Inputs_3.7

Influent Tank PDL Override (Pump down Latch)
Misc_Boolean_Tags_3.23

LSLL-2-1 Influent Tank Level Low-Low N.O. (Held Close)
Discrete_Inputs_3.8

Influent Tank PDL Override (Pump down Latch)
Misc_Boolean_Tags_3.23

Alarm Reset
Misc_Boolean_Tags_1.0

6

This rung triggers the pump down latch based on operator level set points.

LIT-2-1 Influent Tank Level Transmitter In Service
In_Out_Service_1.6

AI8.6 Fail - Influent Tank Level Transmitter Failure
Alarm_Bits_1.6

LIT-2-1 - Influent Tank Level Transmitter Scaled Value [1x ft elev]

GRT
Greater Than (A>B)
Source A Analog_Inputs_Real_1[6] 7.979685
Source B Process_Setpoints[0] 14.0

LIT-2-1 - Influent Tank Level Transmitter Scaled Value [1x ft elev]

GRT
Greater Than (A>B)
Source A Analog_Inputs_Real_1[6] 7.979685
Source B Process_Setpoints[1] 8.0

Influent Tank PDL (Pump down Latch)
Misc_Boolean_Tags_3.27

Influent Tank PDL (Pump down Latch)
Misc_Boolean_Tags_3.27

7

This rung sets the backup float mode status bit.

Influent Tank PDL Override (Pump down Latch)
Misc_Boolean_Tags_3.23

Influent Tank Level High-High Alarm (LAHH) LSHH-2-1
Alarm_Bits_5.23

Influent Tank Level Low-Low Alarm (LALL) LSLL-2-1
Alarm_Bits_5.24

Influent Pump Backup Float Mode
Misc_Boolean_Tags_4.10

8

This rung contains triggers the auto call-to-run logic based on receiving a request from the level controller.

P-2-1 Influent Tank Pump In Service
In_Out_Service_2.13

P-2-1 Influent Tank Pump Interlocks Okay
Pxxxx020100_IntlckOk

P-2-1 Influent Tank Pump OOR Switch 0 = On, 1 = Off, 2 = Remote

EQU
Equal
Source A Influent_Pump_OOR_States
1
Source B 2

Influent Pump Remote Auto/Manual Selector
Misc_Boolean_Tags_2.20

Influent Tank PDL (Pump down Latch)
Misc_Boolean_Tags_3.27

AI8.6 Fail - Influent Tank Level Transmitter Failure
Alarm_Bits_1.6

Influent Tank Level Low-Low Alarm (LALL) LIT 2-1
Alarm_Bits_3.23

Influent Tank Level Low-Low Alarm (LALL) LSLL-2-1
Alarm_Bits_5.24

Influent Tank PDL Override (Pump down Latch)
Misc_Boolean_Tags_3.23

AI8.5 Fail - Treated Effluent Flow Transmitter Failure
Alarm_Bits_1.5

Treated Effluent Flow Low-Low (FALL) FIT 5-1
Alarm_Bits_3.19

FIT-5-1 Effluent Flow Transmitter In Service
In_Out_Service_1.5

P-2-1 Influent Tank Pump Auto Call-To-Run
Pxxxx020100_AutoCTR

9

This rung starts the pump restart delay timer.

Influent Tank Pump
DELAY TIMER
CPT
Compute
Dest DelayDwell_Timers[10].PRE
156000
Expression DwellDelay_Timer_Setpoints[10]*1000

P-2-1 Influent Tank Pump
Running (AUX)
Discrete_Inputs_2.6

Influent Tank Pump
DELAY TIMER
DelayDwell_Timers[10].TT

Influent Tank Pump
DELAY TIMER
TON
Timer On Delay
Timer DelayDwell_Timers[10]
Preset 156000
Accum 0
EN
DN

Influent Tank Pump
DELAY TIMER
DelayDwell_Timers[10].TT

P-2-1 Influent Tank Pump
Running (AUX)
Discrete_Inputs_2.6

P-2-1 Influent Tank Pump
Re-Start Delay
Pxxxx020100_RestartDelay

10

This rung starts the pump dwell on timer.

Influent Tank Pump
DWELL TIMER
CPT
Compute
Dest DelayDwell_Timers[11].PRE
20000
Expression DwellDelay_Timer_Setpoints[11]*1000

P-2-1 Influent Tank Pump
Running (AUX)
Discrete_Inputs_2.6

Influent Tank Pump
DWELL TIMER
DelayDwell_Timers[11].TT

Influent Tank Pump
DWELL TIMER
TON
Timer On Delay
Timer DelayDwell_Timers[11]
Preset 20000
Accum 0
EN
DN

Influent Tank Pump
DWELL TIMER
DelayDwell_Timers[11].TT

P-2-1 Influent Tank Pump
Minimum Runtime Dwell
Pxxxx020100_MinRunDwell

This rung activates the pump run output.

11

P-2-1 Influent Tank Pump In Service
In_Out_Service_2.13

P-2-1 Influent Tank Pump Interlocks Okay
Pxxxx020100_IntlckOk

P-2-1 Influent Tank Pump OOR Switch 0 = On, 1 = Off, 2 = Remote

EQU
Equal
Source A Influent_Pump_OOR_States
1
Source B 2

Influent Pump Remote Auto/Manual Selector
Misc_Boolean_Tags_2.20

P-2-1 Influent Tank Pump Auto Call-To-Run
Pxxxx020100_AutoCTR

Influent Tank Pump DELAY TIMER
DelayDwell_Timers[10].TT

Influent Pump Remote Auto/Manual Selector
Misc_Boolean_Tags_2.20

Influent Pump Manual Start
Misc_Boolean_Tags_2.21

Influent Tank Pump Run Command
Discrete_Outputs_1.6

Influent Pump Manual Stop
Misc_Boolean_Tags_2.22

Influent Tank Pump Run Command
Discrete_Outputs_1.6

Influent Tank Pump Run Command
Discrete_Outputs_1.6

Influent Tank Pump DWELL TIMER
DelayDwell_Timers[11].TT

Influent Tank Pump Run Command
Discrete_Outputs_1.6

(End)

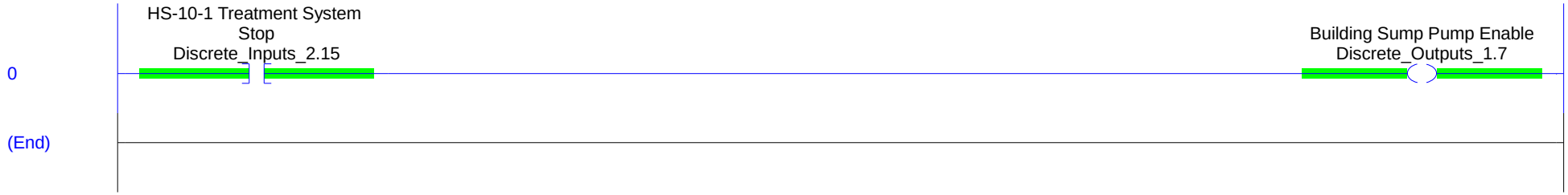
HS-10-1 Treatment System
Stop
Discrete_Inputs_2.15
Building Sump Pump Enable
Discrete_Outputs_1.7
0
(End)

The next three rungs determine the positon of the switch on the front of the control panel
0 = "ON"
1 = "OFF"
2 = "REMOTE"

0

P-1-1-1 WCC EW-1 Pump Remote Discrete_Inputs_1.5 [/]
P-1-1-1 WCC EW-1 Pump Running (AUX) Discrete_Inputs_1.4 [ ]
P-1-1-1 WCC EW-1 Pump OOR Switch 0 = On, 1 = Off, 2 = Remote
MOV
Move Source 0
Dest WCC_EW1_OOR_States 1

1

P-1-1-1 WCC EW-1 Pump Remote Discrete_Inputs_1.5 [/]
P-1-1-1 WCC EW-1 Pump Running (AUX) Discrete_Inputs_1.4 [/]
P-1-1-1 WCC EW-1 Pump OOR Switch 0 = On, 1 = Off, 2 = Remote
MOV
Move Source 1
Dest WCC_EW1_OOR_States 1

2

P-1-1-1 WCC EW-1 Pump Remote Discrete_Inputs_1.5 [ ]
P-1-1-1 WCC EW-1 Pump OOR Switch 0 = On, 1 = Off, 2 = Remote
MOV
Move Source 2
Dest WCC_EW1_OOR_States 1

This rung enables the OIT manual start/stop buttons.

3

P-1-1-1 WCC EW-1 Pump In Service
In_Out_Service_2.3

P-1-1-1 WCC EW-1 Pump OOR Switch 0 = On, 1 = Off, 2 = Remote

EQU
Equal
Source A WCC_EW1_OOR_States 1
Source B 2

P-1-1-1 WCC EW-1 Pump Remote Mode Selector 0=Manual, 1=Auto
Misc_Boolean_Tags_2.0

P-1-1-1 WCC EW-1 Pump Run Command
Discrete_Outputs_1.0

P-1-1-1 WCC EW-1 Pump Start Visible
Misc_Boolean_Tags_3.0

P-1-1-1 WCC EW-1 Pump Run Command
Discrete_Outputs_1.0

P-1-1-1 WCC EW-1 Pump Stop Visible
Misc_Boolean_Tags_3.1

This rung contains the interlocks necessary for the pump to run.

4

WCC EW-1 Pump Run Fail (YA) P-1-1-1
Alarm_Bits_2.3

WCC EW-1 Pump Fail (YA) P-1-1-1
Alarm_Bits_2.4

LIT-2-1 Influent Tank Level Transmitter In Service
In_Out_Service_1.6

AI8.6 Fail - Influent Tank Level Transmitter Failure
Alarm_Bits_1.6

Influent Tank Level High-High Alarm (LAHH) LIT 2-1
Alarm_Bits_3.20

LSHH-2-1 Influent Tank Level High-High N.C. (Held Open)
Discrete_Inputs_3.7

Influent Pump Backup Float Mode
Misc_Boolean_Tags_4.10

Storage Tank Level High-High Alarm (LAHH) LSHH-6-1
Alarm_Bits_5.2

Building Sump Alarm (LAHH) LSHH-7-1
Alarm_Bits_2.2

Loss of Power Alarm (JAL) JSL-10-1
Alarm_Bits_2.1

HS-10-1 Treatment System Stop
Discrete_Inputs_2.15

P-1-1-1 WCC EW-1 Pump Interlocks Okay
Pxxxx010101_IntlckOk

5

This rung contains triggers the auto call-to-run logic based on receiving a request from the level controller.

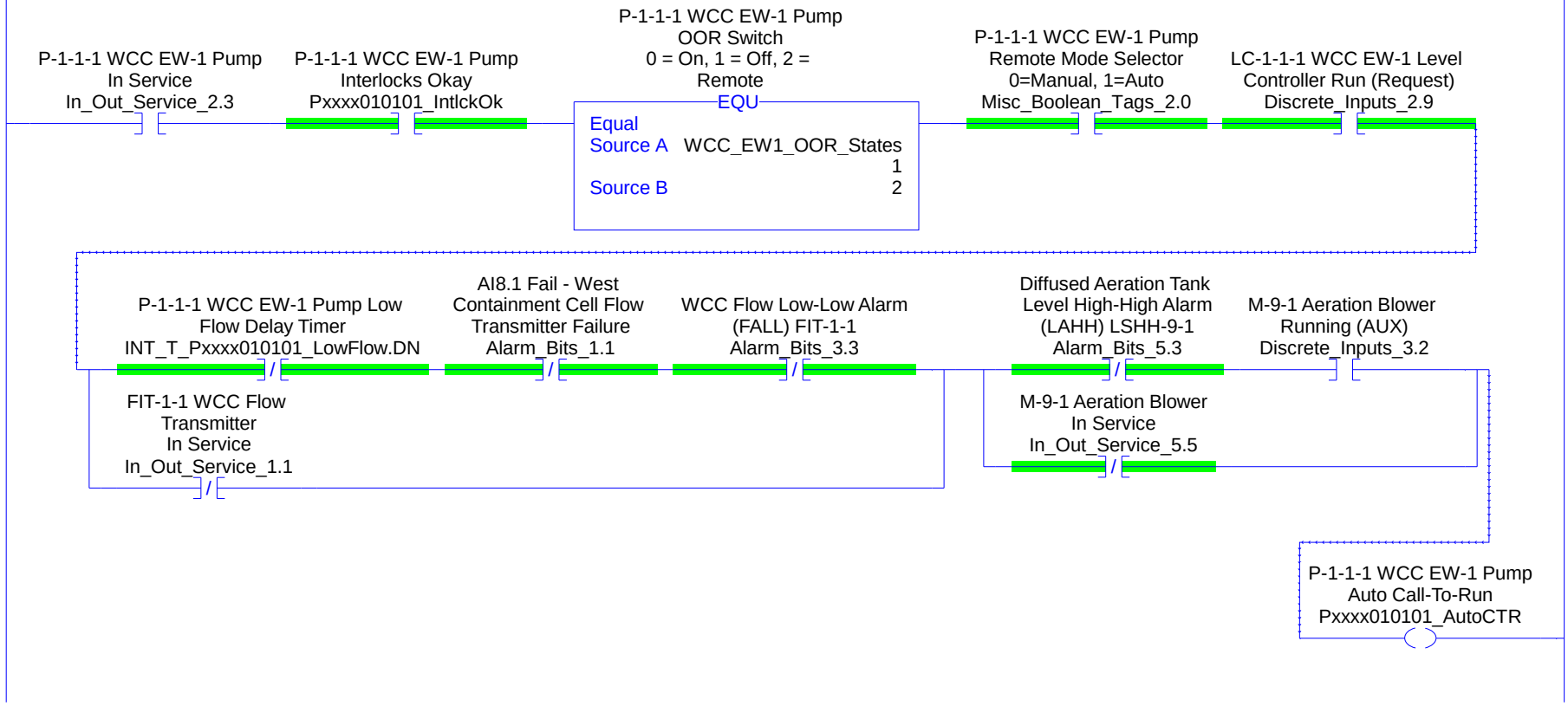

6

This rung monitors pump flow, if pump flow drops below 0.5 or 5.0 gpm depending on the number of WCC pumps running starts a 60 second dwell timer.

FIT-1-1 WCC Flow Transmitter In Service
In_Out_Service_1.1

AI8.1 Fail - West Containment Cell Flow Transmitter Failure
Alarm_Bits_1.1 /

P-1-1-1 WCC EW-1 Pump Auto Call-To-Run
Pxxxx010101_AutoCTR

P-1-1-1 WCC EW-1 Pump Running (AUX)
Discrete_Inputs_1.4

P-1-1-2 WCC EW-2 Pump Running (AUX)
Discrete_Inputs_1.7 /

FIT-1-1 West Containment Cell EW-1 & EW-2 Flow Transmitter Scaled Value [1x gpm]

LES
Less Than (A<B)
Source A Analog_Inputs_Real_1[1] 0.0
Source B 0.5

P-1-1-1 WCC EW-1 Pump Running (AUX)
Discrete_Inputs_1.4

P-1-1-2 WCC EW-2 Pump Running (AUX)
Discrete_Inputs_1.7

FIT-1-1 West Containment Cell EW-1 & EW-2 Flow Transmitter Scaled Value [1x gpm]

LES
Less Than (A<B)
Source A Analog_Inputs_Real_1[1] 0.0
Source B 5.0

P-1-1-1 WCC EW-1 Pump Low Flow Delay Timer
INT_T_Pxxxx010101_LowFlow.DN

P-1-1-1 WCC EW-1 Pump Well Recovery Timer
INT_T_Pxxxx010101_WellRecover.DN /

P-1-1-1 WCC EW-1 Pump Low Flow Delay Timer

MUL
Multiply
Source A 60
Source B 1000
Dest INT_T_Pxxxx010101_LowFlow.PRE 0

P-1-1-1 WCC EW-1 Pump Low Flow Delay Timer

TON
Timer On Delay
EN

Timer INT_T_Pxxxx010101_LowFlow
Preset 0
Accum 0
DN

This rung starts the well recovery timer once a low flow condition has been detected which the low flow latch after 30 minutes.

7

FIT-1-1 WCC Flow Transmitter In Service
In_Out_Service_1.1

AI8.1 Fail - West Containment Cell Flow Transmitter Failure
Alarm_Bits_1.1

P-1-1-1 WCC EW-1 Pump Low Flow Delay Timer
INT_T_Pxxxx010101_LowFlow.DN

P-1-1-1 WCC EW-1 Pump Well Recovery Timer
MUL
Multiply
Source A 30
Source B 60000
Dest INT_T_Pxxxx010101_WellRecover.PRE
0

P-1-1-1 WCC EW-1 Pump Well Recovery Timer
TON
Timer On Delay
Timer INT_T_Pxxxx010101_WellRecover
Preset 0
Accum 0
EN
DN

P-1-1-1 WCC EW-1 Pump Low Flow Recovery Delay
Pxxxx010101_LowFlowRecv

8

This rung starts the pump restart delay timer.

P-1-1-1 WCC EW-1 Pump DELAY TIMER
CPT
Compute
Dest DelayDwell_Timers[0].PRE 864000
Expression DwellDelay_Timer_Setpoints[0]*1000

P-1-1-1 WCC EW-1 Pump Running (AUX) Discrete_Inputs_1.4

P-1-1-1 WCC EW-1 Pump DELAY TIMER DelayDwell_Timers[0].TT

P-1-1-1 WCC EW-1 Pump DELAY TIMER
TON
Timer On Delay
Timer DelayDwell_Timers[0]
Preset 864000
Accum 0
EN
DN

P-1-1-1 WCC EW-1 Pump DELAY TIMER DelayDwell_Timers[0].TT

P-1-1-1 WCC EW-1 Pump Running (AUX) Discrete_Inputs_1.4 /

P-1-1-1 WCC EW-1 Pump Re-Start Delay Pxxxx010101_RestartDelay

9

This rung starts the pump dwell on timer.

P-1-1-1 WCC EW-1 Pump DWELL TIMER
CPT
Compute
Dest DelayDwell_Timers[1].PRE 60000
Expression DwellDelay_Timer_Setpoints[1]*1000

P-1-1-1 WCC EW-1 Pump Running (AUX) Discrete_Inputs_1.4

P-1-1-1 WCC EW-1 Pump DWELL TIMER DelayDwell_Timers[1].TT

P-1-1-1 WCC EW-1 Pump DWELL TIMER
TON
Timer On Delay
Timer DelayDwell_Timers[1]
Preset 60000
Accum 0
EN
DN

P-1-1-1 WCC EW-1 Pump DWELL TIMER DelayDwell_Timers[1].TT

P-1-1-1 WCC EW-1 Pump Minimum Runtime Dwell Pxxxx010101_MinRunDwell

This rung activates the pump run output.

10

P-1-1-1 WCC EW-1 Pump
In Service
In_Out_Service_2.3

P-1-1-1 WCC EW-1 Pump
Interlocks Okay
Pxxxx010101_IntlckOk

P-1-1-1 WCC EW-1 Pump
OOR Switch
0 = On, 1 = Off, 2 =
Remote

EQU
Equal
Source A WCC_EW1_OOR_States
1
Source B 2

P-1-1-1 WCC EW-1 Pump
Remote Mode Selector
0=Manual, 1=Auto
Misc_Boolean_Tags_2.0

P-1-1-1 WCC EW-1 Pump
Auto Call-To-Run
Pxxxx010101_AutoCTR

P-1-1-1 WCC EW-1 Pump
DELAY TIMER
DelayDwell_Timers[0].TT

P-1-1-1 WCC EW-1 Pump
Run Command
Discrete_Outputs_1.0

P-1-1-1 WCC EW-1 Pump
Remote Mode Selector
0=Manual, 1=Auto
Misc_Boolean_Tags_2.0

P-1-1-1 WCC EW-1 Pump
Manual Start
Misc_Boolean_Tags_2.1

P-1-1-1 WCC EW-1 Pump
Manual Stop
Misc_Boolean_Tags_2.2

P-1-1-1 WCC EW-1 Pump
Run Command
Discrete_Outputs_1.0

P-1-1-1 WCC EW-1 Pump
Run Command
Discrete_Outputs_1.0

P-1-1-1 WCC EW-1 Pump
DWELL TIMER
DelayDwell_Timers[1].TT

P-1-1-1 WCC EW-1 Pump
Run Command
Discrete_Outputs_1.0

(End)

The next three rungs determine the positon of the switch on the front of the control panel
0 = "ON"
1 = "OFF"
2 = "REMOTE"

0

P-1-1-2 WCC EW-2 Pump Remote Discrete_Inputs_1.8 [/]
P-1-1-2 WCC EW-2 Pump Running (AUX) Discrete_Inputs_1.7 [ ]
P-1-1-2 WCC EW-2 Pump OOR Switch 0 = On, 1 = Off, 2 = Remote
MOV
Move Source 0
Dest WCC_EW2_OOR_States 1

1

P-1-1-2 WCC EW-2 Pump Remote Discrete_Inputs_1.8 [/]
P-1-1-2 WCC EW-2 Pump Running (AUX) Discrete_Inputs_1.7 [/]
P-1-1-2 WCC EW-2 Pump OOR Switch 0 = On, 1 = Off, 2 = Remote
MOV
Move Source 1
Dest WCC_EW2_OOR_States 1

2

P-1-1-2 WCC EW-2 Pump Remote Discrete_Inputs_1.8 [ ]
P-1-1-2 WCC EW-2 Pump OOR Switch 0 = On, 1 = Off, 2 = Remote
MOV
Move Source 2
Dest WCC_EW2_OOR_States 1

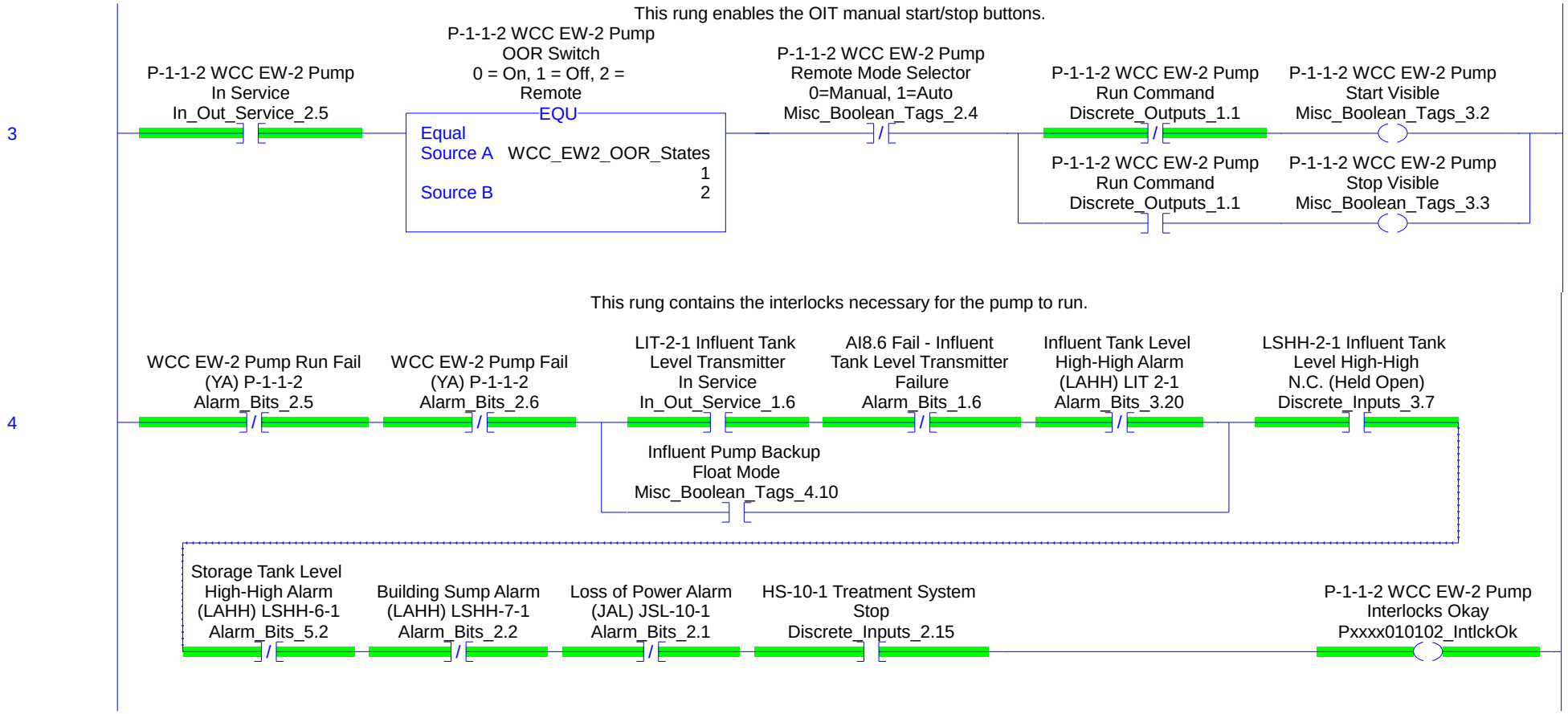
This rung enables the OIT manual start/stop buttons.
3
P-1-1-2 WCC EW-2 Pump In Service In_Out_Service_2.5
P-1-1-2 WCC EW-2 Pump OOR Switch 0 = On, 1 = Off, 2 = Remote
EQU
Equal
Source A WCC_EW2_OOR_States
1
Source B 2
P-1-1-2 WCC EW-2 Pump Remote Mode Selector 0=Manual, 1=Auto Misc_Boolean_Tags_2.4
P-1-1-2 WCC EW-2 Pump Run Command Discrete_Outputs_1.1
P-1-1-2 WCC EW-2 Pump Start Visible Misc_Boolean_Tags_3.2
P-1-1-2 WCC EW-2 Pump Run Command Discrete_Outputs_1.1
P-1-1-2 WCC EW-2 Pump Stop Visible Misc_Boolean_Tags_3.3
This rung contains the interlocks necessary for the pump to run.
4
WCC EW-2 Pump Run Fail (YA) P-1-1-2 Alarm_Bits_2.5
WCC EW-2 Pump Fail (YA) P-1-1-2 Alarm_Bits_2.6
LIT-2-1 Influent Tank Level Transmitter In Service In_Out_Service_1.6
AI8.6 Fail - Influent Tank Level Transmitter Failure Alarm_Bits_1.6
Influent Tank Level High-High Alarm (LAHH) LIT 2-1 Alarm_Bits_3.20
LSHH-2-1 Influent Tank Level High-High N.C. (Held Open) Discrete_Inputs_3.7
Influent Pump Backup Float Mode Misc_Boolean_Tags_4.10
Storage Tank Level High-High Alarm (LAHH) LSHH-6-1 Alarm_Bits_5.2
Building Sump Alarm (LAHH) LSHH-7-1 Alarm_Bits_2.2
Loss of Power Alarm (JAL) JSL-10-1 Alarm_Bits_2.1
HS-10-1 Treatment System Stop Discrete_Inputs_2.15
P-1-1-2 WCC EW-2 Pump Interlocks Okay Pxxxx010102_IntlckOk

5

This rung contains triggers the auto call-to-run logic based on receiving a request from the level controller.

P-1-1-2 WCC EW-2 Pump In Service
In_Out_Service_2.5

P-1-1-2 WCC EW-2 Pump Interlocks Okay
Pxxxx010102_IntlckOk

P-1-1-2 WCC EW-2 Pump OOR Switch 0 = On, 1 = Off, 2 = Remote

EQU
Equal
Source A WCC_EW2_OOR_States
1
Source B 2

P-1-1-2 WCC EW-2 Pump Remote Mode Selector 0=Manual, 1=Auto
Misc_Boolean_Tags_2.4

LC-1-1-2 WCC EW-2 Level Controller Run (Request)
Discrete_Inputs_2.10

P-1-1-2 WCC EW-2 Pump Low Flow Delay Timer
INT_T_Pxxxx010102_LowFlow.DN

AI8.1 Fail - West Containment Cell Flow Transmitter Failure
Alarm_Bits_1.1

WCC Flow Low-Low Alarm (FALL) FIT-1-1
Alarm_Bits_3.3

FIT-1-1 WCC Flow Transmitter In Service
In_Out_Service_1.1

Diffused Aeration Tank Level High-High Alarm (LAHH) LSHH-9-1
Alarm_Bits_5.3

M-9-1 Aeration Blower Running (AUX)
Discrete_Inputs_3.2

M-9-1 Aeration Blower In Service
In_Out_Service_5.5

P-1-1-2 WCC EW-2 Pump Auto Call-To-Run
Pxxxx010102_AutoCTR

6

This rung monitors pump flow, if pump flow drops below 0.5 or 5.0 gpm depending on the number of WCC pumps running starts a 60 second dwell timer.

FIT-1-1 WCC Flow Transmitter In Service
In_Out_Service_1.1

AI8.1 Fail - West Containment Cell Flow Transmitter Failure
Alarm_Bits_1.1 /

P-1-1-2 WCC EW-2 Pump Auto Call-To-Run
Pxxxx010102_AutoCTR

P-1-1-1 WCC EW-1 Pump Running (AUX)
Discrete_Inputs_1.4 /

P-1-1-2 WCC EW-2 Pump Running (AUX)
Discrete_Inputs_1.7

FIT-1-1 West Containment Cell EW-1 & EW-2 Flow Transmitter Scaled Value [1x gpm]
LES
Less Than (A<B)
Source A Analog_Inputs_Real_1[1] 0.0
Source B 0.5

P-1-1-1 WCC EW-1 Pump Running (AUX)
Discrete_Inputs_1.4

P-1-1-2 WCC EW-2 Pump Running (AUX)
Discrete_Inputs_1.7

FIT-1-1 West Containment Cell EW-1 & EW-2 Flow Transmitter Scaled Value [1x gpm]
LES
Less Than (A<B)
Source A Analog_Inputs_Real_1[1] 0.0
Source B 5.0

P-1-1-2 WCC EW-2 Pump Low Flow Delay Timer
INT_T_Pxxxx010102_LowFlow.DN

P-1-1-2 WCC EW-2 Pump Well Recovery Timer
INT_T_Pxxxx010102_WellRecover.DN /

P-1-1-2 WCC EW-2 Pump Low Flow Delay Timer
MUL
Multiply
Source A 60
Source B 1000
Dest INT_T_Pxxxx010102_LowFlow.PRE 60000

P-1-1-2 WCC EW-2 Pump Low Flow Delay Timer
TON
Timer On Delay
EN

Timer INT_T_Pxxxx010102_LowFlow
Preset 60000
Accum 0
DN

This rung starts the well recovery timer once a low flow condition has been detected which the low flow latch after 30 minutes.

7

FIT-1-1 WCC Flow Transmitter In Service
In_Out_Service_1.1

AI8.1 Fail - West Containment Cell Flow Transmitter Failure
Alarm_Bits_1.1

P-1-1-2 WCC EW-2 Pump Low Flow Delay Timer
INT_T_Pxxxx010102_LowFlow.DN

P-1-1-2 WCC EW-2 Pump Well Recovery Timer
MUL
Multiply
Source A 30
Source B 60000
Dest INT_T_Pxxxx010102_WellRecover.PRE
0

P-1-1-2 WCC EW-2 Pump Well Recovery Timer
TON
Timer On Delay
Timer INT_T_Pxxxx010102_WellRecover
Preset 0
Accum 0
EN
DN

P-1-1-2 WCC EW-2 Pump Low Flow Recovery Delay
Pxxxx010102_LowFlowRecv

8

This rung starts the pump restart delay timer.

P-1-1-2 WCC EW-2 Pump DELAY TIMER
CPT
Compute
Dest DelayDwell_Timers[2].PRE
864000
Expression DwellDelay_Timer_Setpoints[2]*1000

P-1-1-2 WCC EW-2 Pump Running (AUX) Discrete_Inputs_1.7

P-1-1-2 WCC EW-2 Pump DELAY TIMER DelayDwell_Timers[2].TT

P-1-1-2 WCC EW-2 Pump DELAY TIMER
TON
Timer On Delay
Timer DelayDwell_Timers[2]
Preset 864000
Accum 0
EN
DN

P-1-1-2 WCC EW-2 Pump DELAY TIMER DelayDwell_Timers[2].TT

P-1-1-2 WCC EW-2 Pump Running (AUX) Discrete_Inputs_1.7

P-1-1-2 WCC EW-2 Pump Re-Start Delay Pxxxx010102_RestartDelay

9

This rung starts the pump dwell on timer.

P-1-1-2 WCC EW-2 Pump DWELL TIMER
CPT
Compute
Dest DelayDwell_Timers[3].PRE
60000
Expression DwellDelay_Timer_Setpoints[3]*1000

P-1-1-2 WCC EW-2 Pump Running (AUX) Discrete_Inputs_1.7

P-1-1-2 WCC EW-2 Pump DWELL TIMER DelayDwell_Timers[3].TT

P-1-1-2 WCC EW-2 Pump DWELL TIMER
TON
Timer On Delay
Timer DelayDwell_Timers[3]
Preset 60000
Accum 0
EN
DN

P-1-1-2 WCC EW-2 Pump DWELL TIMER DelayDwell_Timers[3].TT

P-1-1-2 WCC EW-2 Pump Minimum Runtime Dwell Pxxxx010102_MinRunDwell

This rung activates the pump run output.

10

P-1-1-2 WCC EW-2 Pump
In Service
In_Out_Service_2.5

P-1-1-2 WCC EW-2 Pump
Interlocks Okay
Pxxxx010102_IntlckOk

P-1-1-2 WCC EW-2 Pump
OOR Switch
0 = On, 1 = Off, 2 =
Remote

EQU
Equal
Source A WCC_EW2_OOR_States
1
Source B 2

P-1-1-2 WCC EW-2 Pump
Remote Mode Selector
0=Manual, 1=Auto
Misc_Boolean_Tags_2.4

P-1-1-2 WCC EW-2 Pump
Auto Call-To-Run
Pxxxx010102_AutoCTR

P-1-1-2 WCC EW-2 Pump
DELAY TIMER
DelayDwell_Timers[2].TT

P-1-1-2 WCC EW-2 Pump
Remote Mode Selector
0=Manual, 1=Auto
Misc_Boolean_Tags_2.4

P-1-1-2 WCC EW-2 Pump
Manual Start
Misc_Boolean_Tags_2.5

P-1-1-2 WCC EW-2 Pump
Run Command
Discrete_Outputs_1.1

P-1-1-2 WCC EW-2 Pump
Manual Stop
Misc_Boolean_Tags_2.6

P-1-1-2 WCC EW-2 Pump
Run Command
Discrete_Outputs_1.1

P-1-1-2 WCC EW-2 Pump
Run Command
Discrete_Outputs_1.1

P-1-1-2 WCC EW-2 Pump
DWELL TIMER
DelayDwell_Timers[3].TT

P-1-1-2 WCC EW-2 Pump
Run Command
Discrete_Outputs_1.1

(End)

0

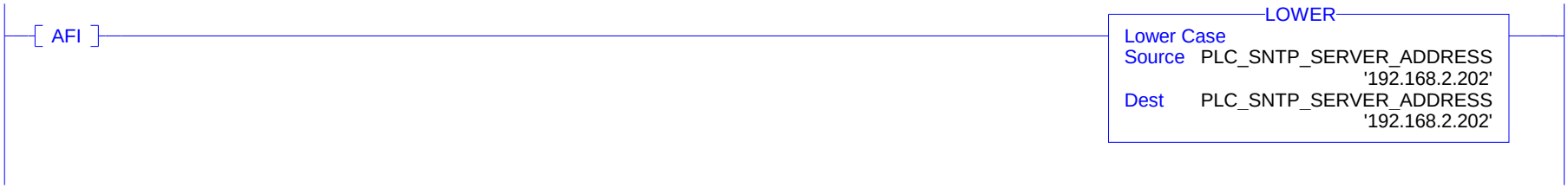
AFI
LOWER
Lower Case
Source PLC_SNTP_SERVER_ADDRESS
'192.168.2.202'
Dest PLC_SNTP_SERVER_ADDRESS
'192.168.2.202'

1

1 - TCP 2- UPD

MOV
Move
Source 2
Dest PLC_SNTP_MSG_DATA.Create_Source.Type
2

Address Family Must be 2

MOV
Move
Source 2
Dest PLC_SNTP_MSG_DATA.Create_Source.Addr.Family
2

Port Number

MOV
Move
Source 0
Dest PLC_SNTP_MSG_DATA.Create_Source.Addr.Port
0

MOV
Move
Source 2000
Dest PLC_SNTP_MSG_DATA.Open_Connection.Timeout
2000

MOV
Move
Source 5000
Dest PLC_SNTP_MSG_DATA.Read_Source.Timeout
5000

Address Family Must be 2

MOV
Move
Source 2
Dest PLC_SNTP_MSG_DATA.Write_Source.ToAddr.Family
2

Port Number

MOV
Move
Source 0
Dest PLC_SNTP_MSG_DATA.Write_Source.ToAddr.Port

0

Disclaimer - All information provided -- No warranty or implied merchantability.
Refer to the RSLogix 5000 End User License Agreement (EULA) in the Release Notes.

This AOI_SNTP_QUERY instruction retrieves the current time from a NTP (Network Time Protocol) server and returns the date to SNTP_Time_Retrieved and optionally the controller's clock as well.

Update "SNTP_SERVER_ADDRESS" tag with <IP address> or <Hostname> of the NTP server.
Examples "2.pool.ntp.org" , "192.168.1.1"

Fill in Query_Interval_in_Min with the number of minutes to periodocally update between successful queries. 0 disables query.
Fill in Query_Error_in_Min with the number fo minutes to retry after an error.
Fill in the Sync_Controller_Clock with a 1 to automatically update controller clock, 0 otherwise.
Next_Query_in_Min will display minutes remaining before the next update.

IMPORTANT! Set the Enable instruction to a 1 to enable the instruction. Set Trigger Update Now if an immediate update is desired (Enable_Instruction must also be set).
Set Sync controller clock to have the controllers clock updated by the instruction at the time of a query.

Note: 1440 minutes = 1 day.

2

SNTP Query and Clock Sync
Instruction

UDI_SNTP_QUERY

SNTP Query and Clock Sync Instruction		
UDI_SNTP_QUERY	PLC_SNTP_AOI_TAG	...
Enable_Instruction	1	
Trigger_Update_Now	0	
Sync_Controller_Clock	1	
Enet_Slot_Number	1	
Query_Interval_in_Min	3600	
Query_Error_Retry_in_Min	5	
Next_Query_in_Min	2593.4585	
UTC_Time	PLC_SNTP_TIME_RETRIEVED	
Server_Address	PLC_SNTP_SERVER_ADDRESS	
MSG_Data	PLC_SNTP_MSG_DATA	
SKT_Create	PLC_SNTP_MSG_CREATE	...
SKT_Open	PLC_SNTP_MSG_OPEN	...
SKT_Write	PLC_SNTP_MSG_WRITE	...
SKT_Read	PLC_SNTP_MSG_READ	...
SKT_Delete	PLC_SNTP_MSG_DELETE	...

EN
DN
ER

3

JSR
Jump To Subroutine
Routine Name PLC_Status

(End)

[GENERAL STATUS]

Monitor Processor Data on first scan dwell timer.

0

S:FS

INT_T_PLCData.EN

INT_T_PLCData.DN

TON
Timer On Delay
Timer INT_T_PLCData
Preset 60000
Accum 0
EN
DN

Get Processor Product Code.

1

INT_T_PLCData.DN

PLC status data
Controller Model Type

GSV
Get System Value
Class Name ControllerDevice
Instance Name
Attribute Name ProductCode
Dest PLC.AS_ProductCode
92

Get Processor Product Revision.

2

INT_T_PLCData.DN

Controller Firmware
Revision Number

GSV
Get System Value
Class Name ControllerDevice
Instance Name
Attribute Name ProductRev
Dest INT_ProductRev
2837

PLC status data
Controller Major Revision

BTD
Bit Field Distribute
Source INT_ProductRev
2837
Source Bit 0
Dest PLC.AS_MajorRev
21
Dest Bit 0
Length 8

PLC status data
Controller Minor Revision

BTD
Bit Field Distribute
Source INT_ProductRev
2837
Source Bit 8
Dest PLC.AS_MinorRev
11
Dest Bit 0
Length 8

Get Processor Serial Number.

3

INT_T_PLCData.DN

PLC status data
Controller Serial Number

GSV
Get System Value
Class Name ControllerDevice
Instance Name
Attribute Name SerialNumber
Dest PLC.AS_SerialNumber
11251280

[PLC, MINOR FAULT and I/O LED STATUS]

Monitor Processor and I/O status every 1 to 2 seconds.

4

INT_T_PLCStatus.EN INT_T_PLCStatus.DN

TON
Timer On Delay
Timer INT_T_PLCStatus
Preset 2000
Accum 0
EN
DN

Get status from processor.

5

GRT
Greater Than (A>B)
Source A INT_T_PLCStatus.ACC
0
Source B 0
0

LES
Less Than (A<B)
Source A INT_T_PLCStatus.ACC
0
Source B 100

Controller Discrete Status

GSV
Get System Value
Class Name ControllerDevice
Instance Name
Attribute Name Status
Dest INT_Status
0

PLC status data
Controller Key Switch
Status 1=Run, 2=Program,
3=Remote

BTD
Bit Field Distribute
Source INT_Status
0
Source Bit 12
Dest PLC.AS_KeySwitch
0
Dest Bit 0
Length 2

Check for Minor Fault from processor.

6

Controller Discrete Status
INT_Status.8

Controller Discrete Status
INT_Status.9

PLC status data
Controller Minor Fault
0=Normal, 1=Minor Fault
PLC.ALM_MinorFlt

Get Minor Fault status from processor.

7

GRT
Greater Than (A>B)
Source A INT_T_PLCStatus.ACC
0
Source B 500

LES
Less Than (A<B)
Source A INT_T_PLCStatus.ACC
0
Source B 600

PLC status data
Controller Minor Fault
0=Normal, 1=Minor Fault
PLC.ALM_MinorFlt

Controller Minor Fault
Word
GSV
Get System Value
Class Name FaultLog
Instance Name
Attribute Name MinorFaultBits
Dest INT_MinorFaultWord
0

PLC status data
Controller Minor Fault
Bits
COP
Copy File
Source INT_MinorFaultWord
Dest PLC.MinorFaultBits
Length 1

Get Force status from processor:
0 - No Forces,
1 - Forces Installed,
2 - Forces Enabled,
3 - Forces installed and Enabled

8

GRT
Greater Than (A>B)
Source A INT_T_PLCStatus.ACC
0
Source B 1000

LES
Less Than (A<B)
Source A INT_T_PLCStatus.ACC
0
Source B 1100

PLC status data
Controller Force Status
0=No Forces, 1=Forces
Installed, 2=Forces
Enabled, 3=Forces
installed and Enabled
GSV
Get System Value
Class Name Module
Instance Name
Attribute Name ForceStatus
Dest PLC.AS_ForceStatus
0

Get I/O Communication LED status from processor:
0 - LED off: No MODULE objects are configured for the controller (there are no modules in the I/O Configuration section of the controller organizer).
1 - Flashing red: None of the MODULE objects are Running.
2 - Flashing green: At least one MODULE object is not Running.
** 3 - Solid green: All the Module objects are Running.

9

GRT
Greater Than (A>B)
Source A INT_T_PLCStatus.ACC
0
Source B 1500

LES
Less Than (A<B)
Source A INT_T_PLCStatus.ACC
0
Source B 1600

PLC status data
Controller I/O LED Status
0=Modules NOT Conf.,
1=Modules NOT Running,
2=Some Modules Running,
3=ALL Modules Running

GSV
Get System Value
Class Name Module
Instance Name
Attribute Name LedStatus
Dest PLC.AS_LEDStatus
0

PLC status data
Controller I/O LED Status
0=Modules NOT Conf.,
1=Modules NOT Running,
2=Some Modules Running,
3=ALL Modules Running

NEQ
Not Equal
Source A PLC.AS_LEDStatus
0
Source B 3

PLC status data
Controller IO Fault
0=Normal, 1=IO Fault
PLC.ALM_IOFlt

[Date and Time]

The following rung moves the PLC processor real time clock into registers for use throughout the program.

10

PLC status data Year

GSV
Get System Value
Class Name WallClockTime
Instance Name
Attribute Name LocalDateTime
Dest PLC.DateTime.AS_Year
2020

The following rung moves the PLC processor real time daylight savings time status into a register for use throughout the program.

11

PLC status data Daylight Savings Time

GSV
Get System Value
Class Name WallClockTime
Instance Name
Attribute Name ApplyDST
Dest PLC.DateTime.AS_DST
1

The following rung calculates the day of the week. (1 = Sun, 2 = Mon, 3 = Tue, 4 = Wed, 5 = Thu, 6 = Fri, 7 = Sat)

12

The DOW instruction calculates the day of the week, based on the Year, Month, and Day and places the result in the DayOfWeek.

UDI_DOW
The DOW instruction calculate...
UDI_DOW INT_DOW ...
FirstDayOfWeek 2
DateTime PLC.DateTime

[Watchdog and Heartbeat]

The following rung is a rolling counter for messaging.

13

PLC status data Rolling counter for communication failure detection logic

ADD
Add
Source A PLC.AS_Heartbeat 417
Source B 1
Dest PLC.AS_Heartbeat 417

PLC status data Rolling counter for communication failure detection logic

GRT
Greater Than (A>B)
Source A PLC.AS_Heartbeat 417
Source B 32000

PLC status data Rolling counter for communication failure detection logic

CLR
Clear
Dest PLC.AS_Heartbeat 417

(End)

1756 Backplane, 1756-A13 : Local Modules

Local: [0] 1756-L71 Project4221

Type:	1756-L71 ControlLogix® 5570 Controller	Parent:	Local
Vendor:	Allen-Bradley	Vendor ID:	1
Slot:	0	Electronic Keying:	Exact Match
Revision:	21.11	Status:	Standby
Module Fault:	Offline	Inhibit Flag	Off

Local: [1] 1756-ENBT/A Ethernet_Module

Type:	1756-ENBT/A 1756 10/100 Mbps Ethernet Bridge, Twisted-Pair Media	Parent:	Local
Vendor:	Allen-Bradley	Vendor ID:	1
Slot:	1	IP Address or Host Name:	192.168.2.200
Electronic Keying:	Compatible Keying	Revision:	6.4
Status:	Standby	Module Fault:	Offline
Inhibit Flag	Off		

Local: [2] 1756-IA16 <no name>

Type:	1756-IA16 16 Point 79V-132V AC Input	Parent:	Local
Vendor:	Allen-Bradley	Vendor ID:	1
Slot:	2	Electronic Keying:	Compatible Keying
Revision:	3.3	Status:	Standby
Module Fault:	Offline	Inhibit Flag	Off
Use Unicast:	n/a		

Module Defined Configuration Tag	Value	Data Type
Local:2:C		AB:1756_DI:C:0
.FilterOffOn_0_7	1	SINT
.FilterOnOff_0_7	9	SINT
.FilterOffOn_8_15	1	SINT
.FilterOnOff_8_15	9	SINT
.FilterOffOn_16_23	0	SINT
.FilterOnOff_16_23	0	SINT
.FilterOffOn_24_31	0	SINT
.FilterOnOff_24_31	0	SINT
.COSOnOffEn	2#0000_0000_0000_0000_1111_1111_1111_1111	DINT
.COSOffOnEn	2#0000_0000_0000_0000_1111_1111_1111_1111	DINT

Local: [3] 1756-IA16 <no name>

Type:	1756-IA16 16 Point 79V-132V AC Input	Parent:	Local
Vendor:	Allen-Bradley	Vendor ID:	1
Slot:	3	Electronic Keying:	Compatible Keying
Revision:	3.3	Status:	Standby
Module Fault:	Offline	Inhibit Flag	Off
Use Unicast:	n/a		

Module Defined Configuration Tag	Value	Data Type
Local:3:C		AB:1756_DI:C:0
.FilterOffOn_0_7	1	SINT
.FilterOnOff_0_7	9	SINT
.FilterOffOn_8_15	1	SINT
.FilterOnOff_8_15	9	SINT
.FilterOffOn_16_23	0	SINT
.FilterOnOff_16_23	0	SINT
.FilterOffOn_24_31	0	SINT
.FilterOnOff_24_31	0	SINT
.COSOnOffEn	2#0000_0000_0000_0000_1111_1111_1111_1111	DINT
.COSOffOnEn	2#0000_0000_0000_0000_1111_1111_1111_1111	DINT

Local: [4] 1756-IA16 <no name>

Type:	1756-IA16 16 Point 79V-132V AC Input	Parent:	Local
Vendor:	Allen-Bradley	Vendor ID:	1
Slot:	4	Electronic Keying:	Compatible Keying
Revision:	3.2	Status:	Standby
Module Fault:	Offline	Inhibit Flag	Off
Use Unicast:	n/a		

Module Defined Configuration Tag	Value	Data Type
Local:4:C		AB:1756_DI:C:0
.FilterOffOn_0_7	1	SINT
.FilterOnOff_0_7	9	SINT
.FilterOffOn_8_15	1	SINT
.FilterOnOff_8_15	9	SINT
.FilterOffOn_16_23	0	SINT

.FilterOnOff_16_23	0	SINT
.FilterOffOn_24_31	0	SINT
.FilterOnOff_24_31	0	SINT
.COSOnOffEn	2#0000_0000_0000_0000_1111_1111_1111_1111	DINT
.COSOffOnEn	2#0000_0000_0000_0000_1111_1111_1111_1111	DINT

Local: [6] 1756-OA16 <no name>

Type:	1756-OA16 16 Point 74V-265V AC Output	Parent:	Local
Vendor:	Allen-Bradley	Vendor ID:	1
Slot:	6	Electronic Keying:	Compatible Keying
Revision:	3.2	Status:	Standby
Module Fault:	Offline	Inhibit Flag	Off
Use Unicast:	n/a		

Module Defined Configuration Tag	Value	Data Type
Local:6:C		AB:1756_DO:C:0
.ProgToFaultEn	0	BOOL
.FaultMode	2#0000_0000_0000_0000_0000_0000_0000_0000	DINT
.FaultValue	2#0000_0000_0000_0000_0000_0000_0000_0000	DINT
.ProgMode	2#0000_0000_0000_0000_0000_0000_0000_0000	DINT
.ProgValue	2#0000_0000_0000_0000_0000_0000_0000_0000	DINT

Local: [8] 1756-IF16 <no name>

Type:	1756-IF16 16 Channel Non-Isolated Voltage/Current Analog Input	Parent:	Local
Vendor:	Allen-Bradley	Vendor ID:	1
Slot:	8	Electronic Keying:	Compatible Keying
Revision:	1.5	Status:	Standby
Module Fault:	Offline	Inhibit Flag	Off
Use Unicast:	n/a		

Module Defined Configuration Tag	Value	Data Type
Local:8:C		AB:1756_IF16_Float_No_Alm:C:0
.ModuleFilter	2	SINT
.RealTimeSample	100	INT
.Ch0Config		AB:1756_NII_Struct_No_Alm:C:0
.Ch1Config		AB:1756_NII_Struct_No_Alm:C:0

.Ch2Config	AB:1756_NII_Struct_No_Alm:C:0
.Ch3Config	AB:1756_NII_Struct_No_Alm:C:0
.Ch4Config	AB:1756_NII_Struct_No_Alm:C:0
.Ch5Config	AB:1756_NII_Struct_No_Alm:C:0
.Ch6Config	AB:1756_NII_Struct_No_Alm:C:0
.Ch7Config	AB:1756_NII_Struct_No_Alm:C:0
.Ch8Config	AB:1756_NII_Struct_No_Alm:C:0
.Ch9Config	AB:1756_NII_Struct_No_Alm:C:0
.Ch10Config	AB:1756_NII_Struct_No_Alm:C:0
.Ch11Config	AB:1756_NII_Struct_No_Alm:C:0
.Ch12Config	AB:1756_NII_Struct_No_Alm:C:0
.Ch13Config	AB:1756_NII_Struct_No_Alm:C:0
.Ch14Config	AB:1756_NII_Struct_No_Alm:C:0
.Ch15Config	AB:1756_NII_Struct_No_Alm:C:0

Local: [9] 1756-IF16 <no name>

Type:	1756-IF16 16 Channel Non-Isolated Voltage/Current Analog Input	Parent:	Local
Vendor:	Allen-Bradley	Vendor ID:	1
Slot:	9	Electronic Keying:	Compatible Keying
Revision:	1.5	Status:	Standby
Module Fault:	Offline	Inhibit Flag	Off
Use Unicast:	n/a		

Module Defined Configuration Tag	Value	Data Type
Local:9:C		AB:1756_IF16_Float_No_Alm:C:0
.ModuleFilter	2	SINT
.RealTimeSample	100	INT
.Ch0Config		AB:1756_NII_Struct_No_Alm:C:0
.Ch1Config		AB:1756_NII_Struct_No_Alm:C:0
.Ch2Config		AB:1756_NII_Struct_No_Alm:C:0
.Ch3Config		AB:1756_NII_Struct_No_Alm:C:0
.Ch4Config		AB:1756_NII_Struct_No_Alm:C:0
.Ch5Config		AB:1756_NII_Struct_No_Alm:C:0
.Ch6Config		AB:1756_NII_Struct_No_Alm:C:0
.Ch7Config		AB:1756_NII_Struct_No_Alm:C:0
.Ch8Config		AB:1756_NII_Struct_No_Alm:C:0
.Ch9Config		AB:1756_NII_Struct_No_Alm:C:0
.Ch10Config		AB:1756_NII_Struct_No_Alm:C:0

.Ch11Config	AB:1756_NII_Struct_No_Alm:C:0
.Ch12Config	AB:1756_NII_Struct_No_Alm:C:0
.Ch13Config	AB:1756_NII_Struct_No_Alm:C:0
.Ch14Config	AB:1756_NII_Struct_No_Alm:C:0
.Ch15Config	AB:1756_NII_Struct_No_Alm:C:0

Local: [11] 1756-OF8 <no name>

Type:	1756-OF8 8 Channel Non-Isolated Voltage/Current Analog Output	Parent:	Local
Vendor:	Allen-Bradley	Vendor ID:	1
Slot:	11	Electronic Keying:	Compatible Keying
Revision:	1.5	Status:	Standby
Module Fault:	Offline	Inhibit Flag	Off
Use Unicast:	n/a		

Module Defined Configuration Tag	Value	Data Type
Local:11:C		AB:1756_OF8_Float:C:0
.ProgToFaultEn	0	BOOL
.Ch0Config		AB:1756_NIO_Struct:C:0
.Ch1Config		AB:1756_NIO_Struct:C:0
.Ch2Config		AB:1756_NIO_Struct:C:0
.Ch3Config		AB:1756_NIO_Struct:C:0
.Ch4Config		AB:1756_NIO_Struct:C:0
.Ch5Config		AB:1756_NIO_Struct:C:0
.Ch6Config		AB:1756_NIO_Struct:C:0
.Ch7Config		AB:1756_NIO_Struct:C:0

Project4221
Controller Organizer Listing 1
MainTask
MainProgram
A08_00_FCVxx010200_Scl
Function Block Diagram 6
A08_01_FITxx010100_SclMinMaxAvg
Function Block Diagram 7
A08_02_FITxx010200_SclMinMaxAvg
Function Block Diagram 12
A08_03_FITxx010301_SclMinMaxAvg
Function Block Diagram 17
A08_04_FITxx010302_SclMinMaxAvg
Function Block Diagram 22
A08_05_FITxx050100_SclMinMaxAvg
Function Block Diagram 27
A08_06_LITxx020100_SclMinMaxAvg
Function Block Diagram 32
A08_07_LTxxx010101_SclMinMaxAvg
Function Block Diagram 36
A08_08_LTxxx010303_SclMinMaxAvg
Function Block Diagram 40
A08_09_LTxxx010200_SclMinMaxAvg
Function Block Diagram 44
A08_10_LTxxx010301_SclMinMaxAvg
Function Block Diagram 48
A08_11_LTxxx010302_SclMinMaxAvg
Function Block Diagram 52
A08_12_LTxxx010102_SclMinMaxAvg
Function Block Diagram 56
A08_13_LTxxx010304_SclMinMaxAvg
Function Block Diagram 60
A08_14_LTxxx010305_SclMinMaxAvg
Function Block Diagram 64
A08_15_LTxxx010306_SclMinMaxAvg
Function Block Diagram 68
A09_00_PDITx030100_SclMinMaxAvg
Function Block Diagram 72
A09_01_PDITx040100_SclMinMaxAvg
Function Block Diagram 76
A09_02_PDITx040200_SclMinMaxAvg
Function Block Diagram 80
A09_03_Pxxxx010301_Scl
Function Block Diagram 84
A09_04_Pxxxx010302_Scl

Function Block Diagram....85
A09_08_LTxxx010103_SclMinMaxAvg
Function Block Diagram 86
A09_09_LTxxx010104_SclMinMaxAvg
Function Block Diagram 90
A09_10_LTxxx010105_SclMinMaxAvg
Function Block Diagram 94
A09_11_LTxxx010106_SclMinMaxAvg
Function Block Diagram 98
Alarms
Ladder Diagram 102
CF_FCV_Control
Ladder Diagram 209
CF_Sump_Pump
Ladder Diagram 217
InputOutput_Mapping
Ladder Diagram 225
MainRoutine
Ladder Diagram 235
Motor_Run_Time
Ladder Diagram 246
ODC_EW1_Control
Ladder Diagram 254
ODC_EW2_Control
Ladder Diagram 269
Periodic_Reset
Ladder Diagram 284
TB_ChemFeed_Pump
Ladder Diagram 288
TB_DAT_Blower
Ladder Diagram 295
TB_Influent_Pump
Ladder Diagram 300
TB_Sump_Pump
Ladder Diagram 306
WCC_EW1_Control
Ladder Diagram 307
WCC_EW2_Control
Ladder Diagram 314
Utility
Utility
MainRoutine
Ladder Diagram 321
PLC_Status
Ladder Diagram 325

Module Properties

1756 Backplane, 1756-A13 : Local Modules 332

Appendix D
Diffused Aeration Tank, Static Mixer, and Metering Pump Operations and Maintenance

OPERATIONS AND MAINTENANCE PLAN
REMEDIAL CONSTRUCTION ACTIVITIES
WATER TREATMENT SYSTEM
WAUKEGAN, ILLINOIS

Diffused Aeration Tank and Metering Pump

Equipment Description / Scope of Supply

(1) DTA1 diffused aerator chamber 304 SS welded construction with removable bolted cover, (3) 24” SS coarse bubble diffusers, (1) 6” demister pad with nozzle outlet, 2” NPT inlet/outlet connections, single point level switch – High Alarm
(1) Rotron DR 513R58 regen blower, 1.5 hp 220 VAC single phase motor, inline filter
(1) Blower low pressure switch – Dwyer 1950-5
(1) welded steel stand for above to mount over 60” dia x 69” high vertical HDPE tank

(1) Metering pump Grundfos Model DDA, 120V AC, adjustable flow control, self priming, graphic liquid crystal display

Controls, programming changes and PLC parts to add above components, does not include wiring to devices

Submittal Section Review		
Approved	Approved as Noted	Revise and Resubmit
Signature Required:		Date:

NOTES:
1. DTA-1 DIFFUSED AERATOR.
2. 304 WELDED STAINLESS STEEL CONSTRUCTION.
3. AERATOR EMPTY WEIGHT: 145 LBS, MAX OPERATING WEIGHT: 650 LBS.

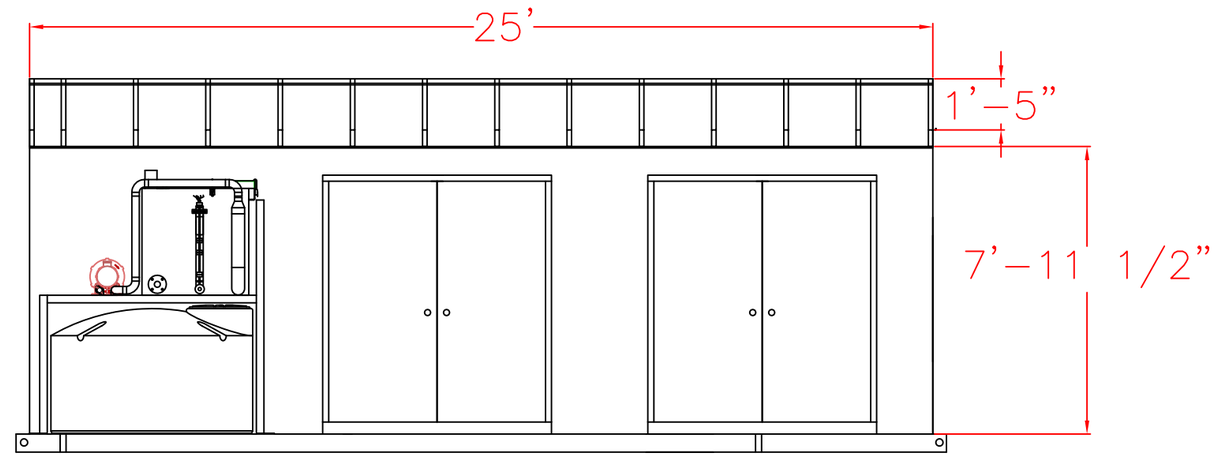

FRONT SECTION VIEW

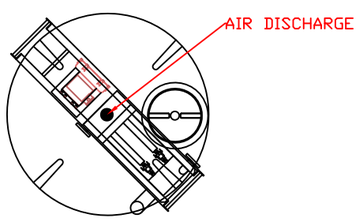

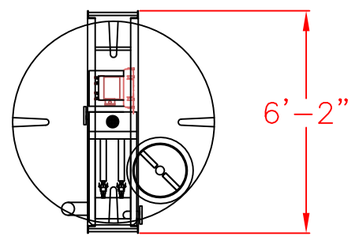

TOP VIEW

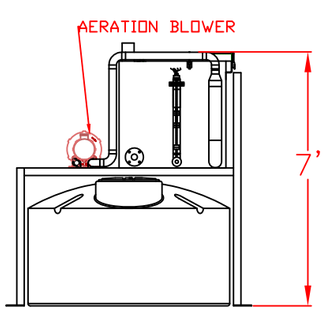

SIDE VIEW

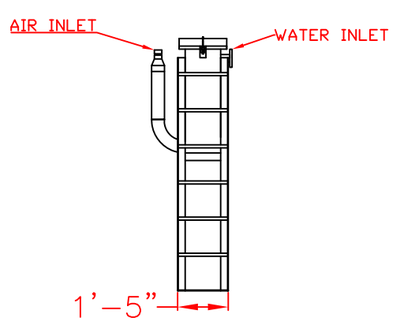

END VIEW

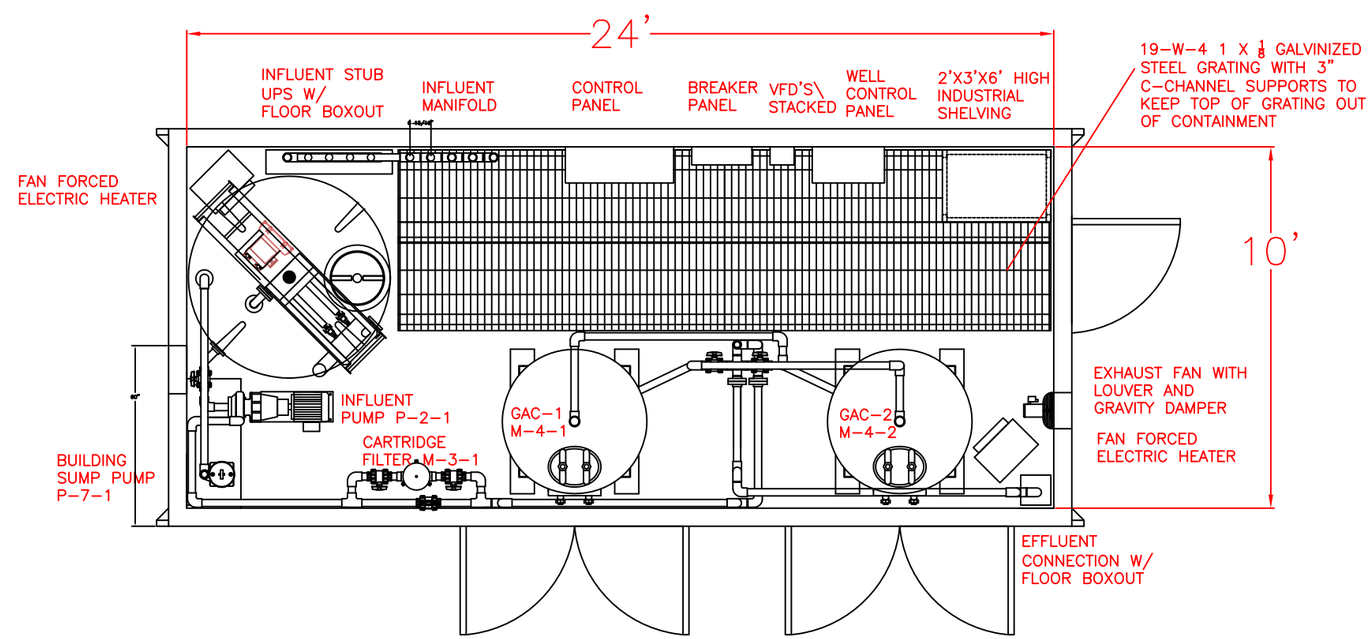

PLAN VIEW

REVISIONS			
REV	DESCRIPTION	DATE	DWN

UNLESS SPECIFIED OTHERWISE
* DIMENSIONS ARE IN INCHES
* DO NOT SCALE DRAWING

DRAWN BY: MK
DESIGNED BY: JU
PROJECT MGR.: MK
DATE: 4/11/14
PROJECT NO.: 4175

THESE MATERIALS ARE PROPRIETARY AND SHALL REMAIN THE PROPERTY OF H2K TECHNOLOGIES, INC. BUYER SHALL HAVE THE USE OF MATERIALS AND INFORMATION FOR THE LIMITED PURPOSE OF INSTALLING AND MAINTAINING THE EQUIPMENT SOLD BY H2K TECHNOLOGIES, INC. NOT TO BE REPRODUCED WITHOUT WRITTEN PERMISSION.

H2K Technologies, Inc.
7550 Commerce St Corcoran MN 55340 Tel: 763-746-9900 ©2014

PROJECT TITLE:
OMC WAUKEGAN HARBOR
WAUKEGAN, IL
ARROWHEAD CONTRACTING

DRAWING TITLE:
DIFFUSED AERATOR ADDITION
PLOT & ELEVATION DRAWING

SHEET 1 OF 1

DRAWING NO.:
4566-01

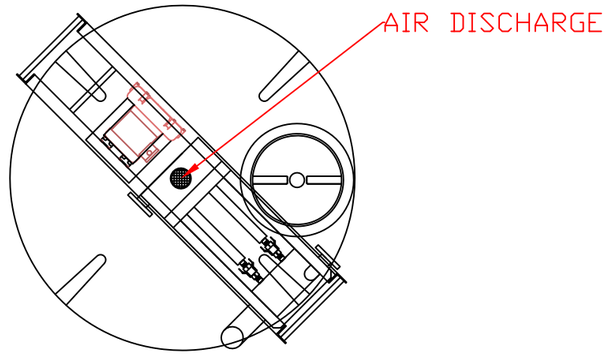

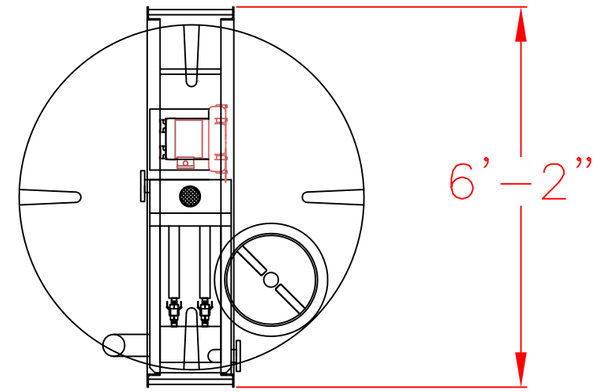

TOP VIEW

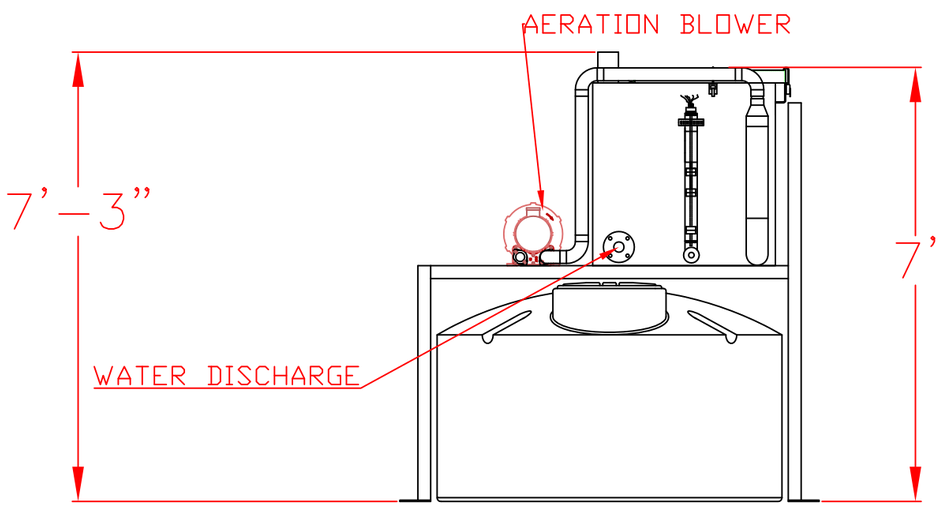

SIDE VIEW

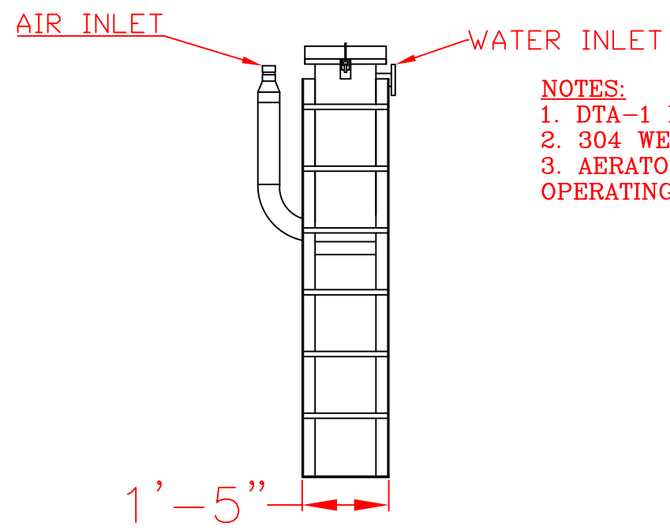

END VIEW

NOTES:
1. DTA-1 DIFFUSED AERATOR.
2. 304 WELDED STAINLESS STEEL CONSTRUCTION.
3. AERATOR EMPTY WEIGHT: 145 LBS, MAX OPERATING WEIGHT: 650 LBS.

REVISIONS			
REV	DESCRIPTION	DATE	DWN

UNLESS SPECIFIED OTHERWISE
* DIMENSIONS ARE IN INCHES
* DO NOT SCALE DRAWING

DRAWN BY: MK
DESIGNED BY: JU
PROJECT MGR.: MK
DATE: 4/11/14
PROJECT NO.: 4175

THESE MATERIALS ARE PROPRIETARY AND SHALL REMAIN THE PROPERTY OF H2K TECHNOLOGIES, INC. BUYER SHALL HAVE THE USE OF MATERIALS AND INFORMATION FOR THE LIMITED PURPOSE OF INSTALLING AND MAINTAINING THE EQUIPMENT SOLD BY H2K TECHNOLOGIES, INC. NOT TO BE REPRODUCED WITHOUT WRITTEN PERMISSION.

H2K Technologies, Inc.
7550 Commerce St Corcoran MN 55340 Tel: 763-746-9900 ©2014

PROJECT TITLE:
DMC WAUKEGAN HARBOR
WAUKEGAN, IL
ARROWHEAD CONTRACTING

DRAWING TITLE:
DIFFUSED AERATOR ADDITION
PLOT & ELEVATION DRAWING

SHEET 1 OF 1

DRAWING NO.:
4566-02

DTA Series
Diffused Aeration Tank Stripper

Features & Specifications

- 304 Stainless steel welded tank construction
- Clearwell for pump out or gravity drain discharge
- (2) 304 Stainless steel fouling-resistant coarse bubble diffusers per chamber with PVC risers
and unions above the water line for easy removal
- Centrifugal pressure blower operating under forced or induced draft, welded steel volute and stand, aluminum wheel, special coatings available
- Full removable top cover for easy access to entire cross section, D-ring buna-N cover gasket
- Over and under weirs and baffles to distribute water across each chamber for maximum residence time, aeration and removal efficiency
- Stainless steel hermetically sealed float rod assembly (single or multiple floats for pump control)
- 6” High steel skid125 lb flanged influent & effluent connections with conical gussets
- Flanged air inlet with diffuser for distribution
- Steel skid with C6x8.2 joists and frame members
continuously welded at the ends, 3/16” steel deck with 1” fillet welds every 12” on center, fork pockets
- PVC air inlet transition piping with flexible coupling for vibration isolation
- Polypropylene demister on vapor discharge to remove 99% 0f 10 micron and larger droplets
- ¾” Drain valves for sump and aeration chambers
- Internal PVC air distributor header
- Clearwell for pumping directly from unit
- 2” PVC Sump level site glass with flange connections for easy removal

H2K Technologies, Inc.

Applications

- Removal of dissolved volatile organic compounds (VOC’s) from water with high dissolved inorganics
- Drinking water for dissolved VOC’s
- Groundwater /wastewater treatment
- Radon removal
- Removal of dissolved chlorinated organic compounds from water (TCE, PCE, TCA, DCA…)
- Removal of gasoline range organics (BTEX compounds), DRO & other hydrocarbons from water (including MTBE)

H2K Technologies, Inc.
7550 Commerce St
Corcoran, MN 55340
Phone: 763.746.9900
Fax: 763.746.9903
www.H2KTECH.com
Sales@H2KTech.com

Model Number	Number of aeration chambers	Liquid Flow Range, GPM	Air flow SCFM	Length Feet	Height Feet	Width Feet	Inlet/Outlet connection, Standard	Vapor discharge connection, inches	Standard sump holding capacity Gallons	Shipping Weight Lbs.	Operating Weight Lbs.
DTA-4	4	1-225	320	10.5	5.5	3.5	2" FPT	(2) 4"	35	1,790	3,200
DTA-6	6	1-225	480	12.5	6	4	2" FPT	(2) 8"	40	2,665	6,240
DTA-8	8	1-225	640	14.5	6	4	2" FPT	(2) 8"	40	2,980	7,820
DTA-10	10	1-450	800	11.5	6	8	2" FPT	(2) 10"	80	3,570	9,250
DTA-12	12	1-450	960	12.5	6	8	4" 150lb flng	(2) 10"	80	3,990	10,100
DTA-16	16	1-450	1,280	15.5	6	8	4" 150 lb flng	(2) 10"	80	4,690	11,230

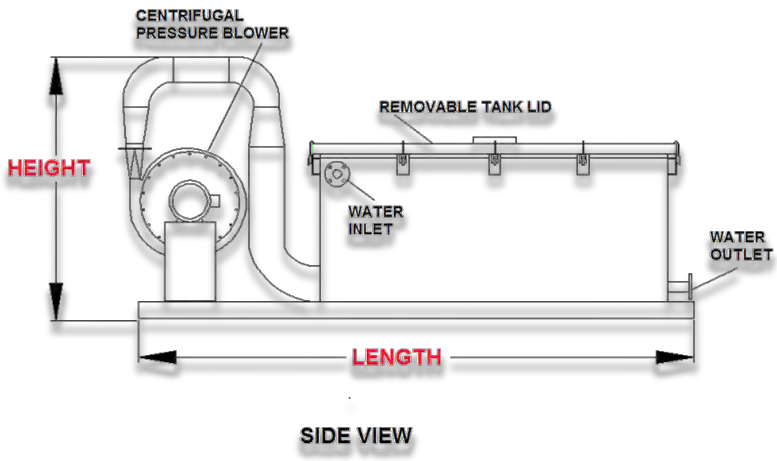

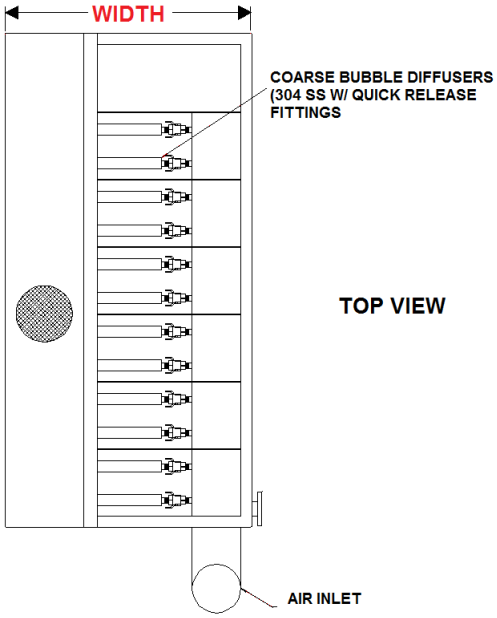

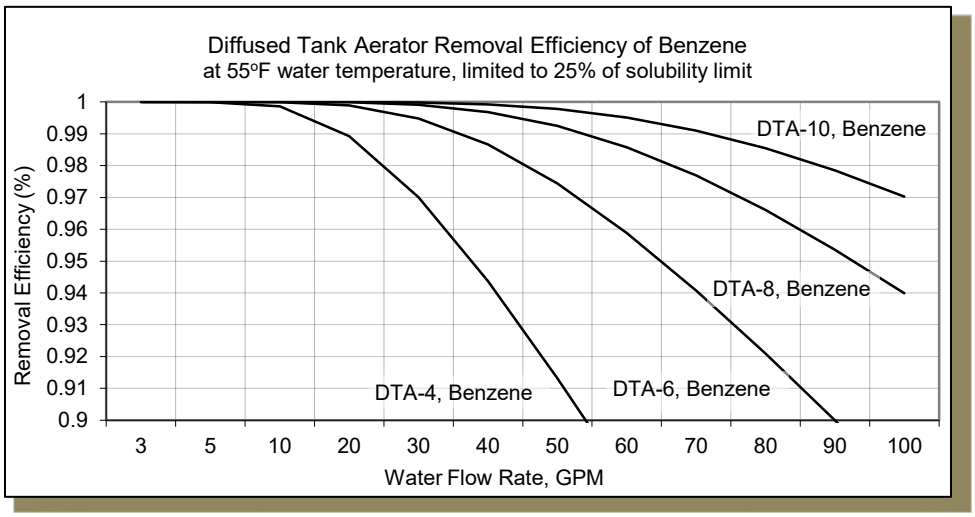

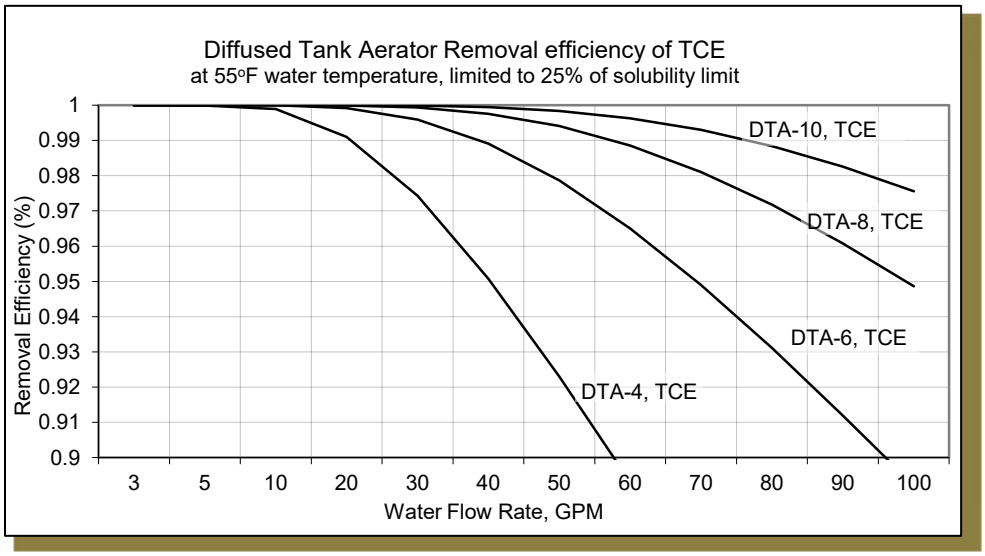

Options

- Epoxy painted steel, fiberglass reinforced plastic construction or welded polypropylene construction
- Larger clearwell for more pump down volume
- High flow units up to 300 gpm
- Sound enclosure with urethane sound insulation to reduce sound level 10-15 dBA at 3
- Centrifugal discharge pump & level controls
- Heat trace or immersion heaters for classified or non-classified electrical areas for freeze protection
- Induced draft blower configuration for humidity
- R-5 insulation with jacket, (FRP or aluminum jacket)
- Custom control panel to control blower, pump and other equipment if required
- Process duct heater to lower humidity in off gas vapor before vapor GAC treatment
- Off gas ducting, FRP, PVC, coated or hot dipped galvanized steel construction
- Enclosures or trailer for freeze protection or mobility
- Flow, pressure, level & temperature gages or transmitters

© 2011 H2K Technologies, Inc.

Additional Photos

© 2011 H2K Technologies, Inc.

DR 513 & CP 513 Regenerative Blower

Scale CAD drawing available upon request.

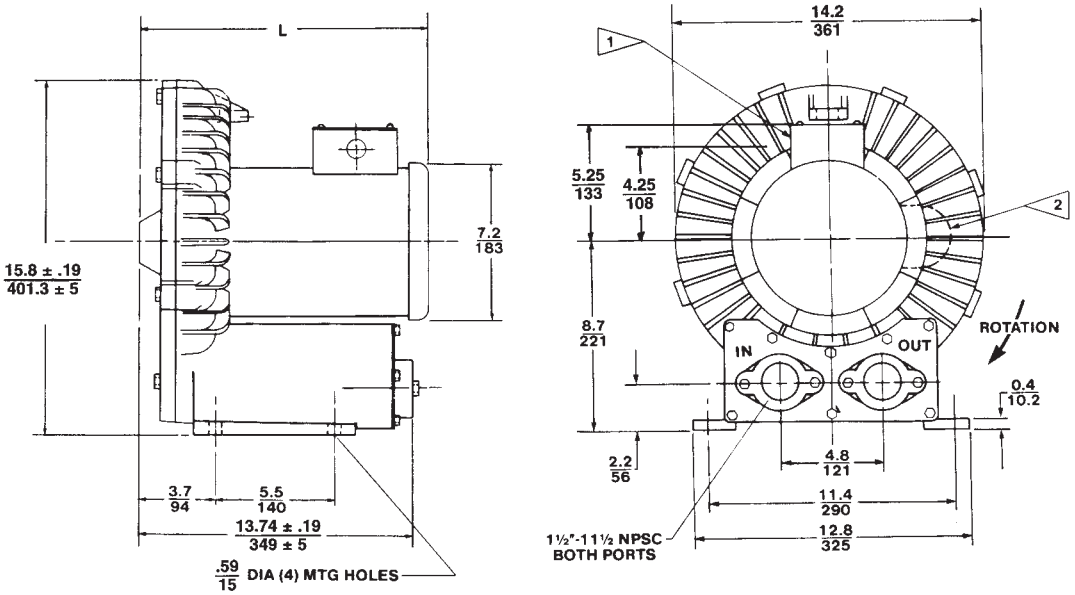

DIMENSIONS: IN / MM
TOLERANCES: .XX ± .08/2
(UNLESS OTHERWISE NOTED)

MODEL	L (IN)	L (MM)
DR513R58	14.7	373
DR513R72	13.7	348
DR513R86	13.7	348
CP513EZ72LR	13.7	348

1 TERMINAL BOX CONNECTION .09 INCH DIAMETER ON TEFC MOTORS

2 LOCATION OF CAPACITOR ON SINGLE PHASE MOTORS AND TERMINAL BOX ON XP MOTORS

SPECIFICATIONS

MODEL	DR513R72	DR513R58	DR513R86	CP513EZ72LR
Part No.	037217	037209	037773	038241
Motor Enclosure – Shaft Material	TEFC – **CS**	TEFC – **CS**	TEFC – **CS**	ChemTEFC – **SS**
Horsepower	1.5	1.5	1.5	Same as DR513R72 – 037217 except add Chemical Processing (CP) features from catalog page iii
Voltage [1]	230/460	115/230	575	
Phase – Frequency [1]	Three - 60 Hz	Single - 60 Hz	Three - 60 Hz	
Insulation Class [2]	F	F	F	
NEMA Rated Motor Amps	4.6/2.3	16.8/8.4	1.8	
Service Factor	1.15	1.15	1.5	
Locked Rotor Amps	43/21	120/60	13	
Max. Blower Amps [3]	4.8/2.4	18.2/9.1	1.85	
Recommended NEMA Starter Size	00/00	1/0	00	
Shipping Weight	86 lb (39 kg)	90 lb (41 kg)	86 lb (39 kg)	

[1] Rotron motors are designed to handle a broad range of world voltages and power supply variations. Our dual voltage 3 phase motors are factory tested and certified to operate on both: **208-230/415-460 VAC-3 ph-60 Hz** and **190-208/380-415 VAC-3 ph-50 Hz**. Our dual voltage 1 phase motors are factory tested and certified to operate on both: **104-115/208-230 VAC-1 ph-60 Hz** and **100-110/200-220 VAC-1 ph-50 Hz**. All voltages above can handle a ±10% voltage fluctuation. Special wound motors can be ordered for voltages outside our certified range.

[2] Maximum operating temperature: Motor winding temperature (winding rise plus ambient) should not exceed 140°C for Class F rated motors or 120°C for Class B rated motors. Blower outlet air temperature should not exceed 140°C (air temperature rise plus inlet temperature). Performance curve maximum pressure and suction points are based on a 40°C inlet and ambient temperature. Consult factory for inlet or ambient temperatures above 40°C.

[3] Maximum blower amps corresponds to the performance point at which the motor or blower temperature rise with a 40°C inlet and/or ambient temperature reaches the maximum operating temperature.

Specifications subject to change without notice. Please consult your Local Field Sales Engineer for specification updates.

Rev. 6/08

BLOWER LOW PRESSURE SWITCH

Series 1950

Explosion-proof Differenti[illegible]es

Compact, Low Cost, Explosion-proof and Weatherproof

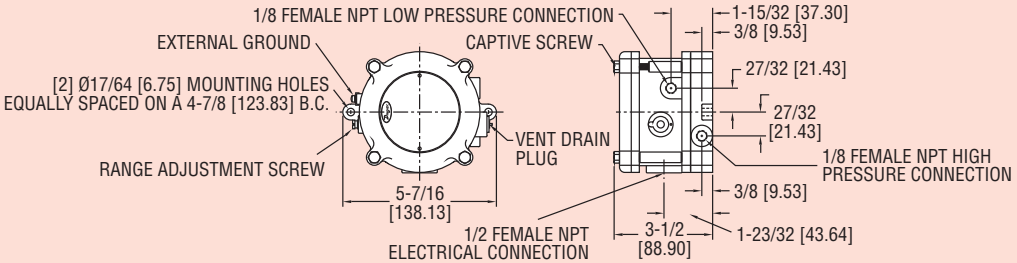

Model 1950 Explosion-Proof Differential Pressure Switch combines the best features of the popular Dwyer® Series 1900 Pressure Switch with an integral explosion-proof and weatherproof housing, making it an exceptional value for either application. It is CE, UL and CSA listed, FM approved for use in Class I, Div 1, Groups C and D, Class II Groups E, F, and G and Class III hazardous atmospheres (NEMA 7 & 9), Raintight NEMA 3 (IP54). Weatherproof features include a drain plug and O-ring seal in cover. Electrical connections are easily made by removing front cover. For convenience the set point adjustment screw is located on the outside of the housing. Twelve models offer set points from .03 to 20 in w.c. (7.5 to 5 kPa) and from .5 to 50 psi (0.035 to 3.5 bar). The unit is very light and compact – about half the weight and bulk of other explosion-proof or weather-proof switches with separate enclosures.

Series 1950 Switches - Operating Ranges and Dead Bands

Model	Range, in w.c.	Approximate Dead Band at Min. Set Point	Approximate Dead Band at Max. Set Point
1950-02-2S	.03 to .10	.025	.05
1950-00-2F	.07 to .15	.04	.05
1950-0-2F	.15 to .50	.10	.15
1950-1-2F	.4 to 1.6	.15	.20
1950-5-2F	1.4 to 5.5	.30	.40
1950-10-2F	3 to 11	.40	.50
1950-20-2F	4 to 20	.40	.60

SPECIFICATIONS

Service: Air and non-combustible, compatible gases.
Wetted Materials: Consult factory.
Temperature Limits: -40 to 140°F (-40 to 60°C); 0 to 140°F (-17.8 to 60°C) for 1950P-8, 15, 25, and 50. -30 to 130°F (-34.4 to 54.4°C) for 1950-02.
Pressure Limits: Continuous: 1950's - 45 in w.c. (0.11 bar); 1950P's - 35 psi (2.41 bar); 1950P-50 only - 70 psi (4.83 bar). Surge: 1950's - 10 psi (0.69 bar), 1950P's - 50 psi (3.45 bar), 1950P-50 only - 90 psi (6.21 bar).
Enclosure Rating: NEMA 3 (IP54), NEMA 7 & 9.
Switch Type: Single-pole double-throw (SPDT).
Electrical Rating: 15 A @, 125, 250, 480 VAC, 60 Hz. Resistive 1/8 HP @ 125 VAC, 1/4 HP @ 250 VAC, 60 Hz.
Electrical Connections: 3 screw type, common, normally open and normally closed.
Process Connections: 1/8″ female NPT.
Mounting Orientation: Diaphragm in vertical position. Consult factory for other position orientations.
Set Point Adjustment: Screw type on top of housing.
Weight: 3.25 lb (1.5 kg); 1950-02 model, 4.4 lb (2 kg).
Agency Approvals: CE, CSA, FM, UL.

Model*	Range, psid	Approximate Dead Band at Min. Set Point	Approximate Dead Band at Max. Set Point
1950P-2-2F	0.5 to 2	.3	.3
1950P-8-2F	1.5 to 8	1.0	1.0
1950P-15-2F	3 to 15	.9	.9
1950P-25-2F	4 to 25	.7	.7
1950P-50-2F	15 to 50	1.0	1.5

CAUTION: For use only with air or compatible gases. Applications with hazardous atmospheres and a single positive pressure may require special venting. *P=PSID range models

AERATOR TANK HIGH LEVEL SWITCH

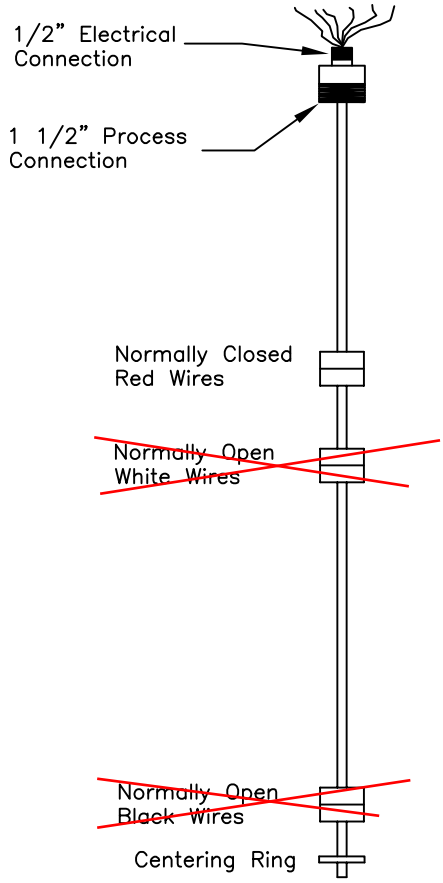

This drawing shows a typical tank pump down with high level alarm scenerio.

Note:
1. All components to be stainless steel.
2. Multiple or single float assemblies.
3. Switch to be 50 watt reed switch with 22 gage PVC insulated leads
4. Length can be specified, but is not field adjustable

SHEET 1 OF 1
DRAWING NO.: LEVEL SUBMIT
DRAWING TITLE: Custom Level Switches
PROJECT TITLE: Standard Product

H2K Technologies, Inc.
9851 13th Ave N., Plymouth, MN 55441, Tel: 763-746-9900
©2003

THESE MATERIALS ARE PROPRIETARY AND SHALL REMAIN THE PROPERTY OF H2K TECHNOLOGIES, INC. BUYER SHALL HAVE THE USE OF MATERIALS AND INFORMATION FOR THE LIMITED PURPOSE OF INSTALLING AND MAINTAINING THE EQUIPMENT SOLD BY H2K TECHNOLOGIES, INC. NOT TO BE REPRODUCED WITHOUT WRITTEN PERMISSION.

UNLESS SPECIFIED OTHERWISE
• DIMENSIONS ARE IN INCHES
• DO NOT SCALE DRAWING

DRAWN BY: MK
DESIGNED BY: MK
PROJECT MGR.: MK
DATE: 9/27/03
PROJECT NO.: Level Switch

REVISIONS

REV	DESCRIPTION	DATE	DWN

GRUNDFOS **INSTRUCTIONS**

SMART Digital - DDA

Installation and operating instructions

BE > THINK > INNOVATE >

GRUNDFOS

Declaration of conformity

GB: EC declaration of conformity

We, Grundfos, declare under our sole responsibility that the products DDA, DDC and DDE, to which this declaration relates, are in conformity with these Council directives on the approximation of the laws of the EC member states:

– Machinery Directive (2006/42/EC).
  Standards used: EN 809: 1998, EN ISO 12100-1+A1: 2009, EN ISO 12100-2+A1: 2009.
– Low Voltage Directive (2006/95/EC). *
  Standard used: EN 61010-1: 2001 (second edition).
– EMC Directive (2004/108/EC).
  Standards used: EN 61326-1: 2006, EN 61000-3-2: 2006+A1: 2009+A2: 2009, EN 61000-3-3: 2008.

* Only for products with operating voltage > 50 VAC or > 75 VDC.

This EC declaration of conformity is only valid when published as part of the Grundfos installation and operating instructions.

BG: ЕС декларация за съответствие

Ние, фирма Grundfos, заявяваме с пълна отговорност, че продуктите DDA, DDC и DDE, за които се отнася настоящата декларация, отговарят на следните указания на Съвета за уеднаквяване на правните разпоредби на държавите членки на ЕС:

– Директива за машините (2006/42/EC).
  Приложени стандарти: EN 809: 1998, EN ISO 12100-1+A1: 2009, EN ISO 12100-2+A1: 2009.
– Директива за нисковолтови системи (2006/95/EC). *
  Приложен стандарт: EN 61010-1: 2001 (второ издание).
– Директива за електромагнитна съвместимост (2004/108/EC).
  Приложени стандарти: EN 61326-1: 2006, EN 61000-3-2: 2006+A1: 2009+A2: 2009, EN 61000-3-3: 2008.

* Само за продукти, работещи при напрежение > 50 VAC или > 75 VDC.

Тази ЕС декларация за съответствие е валидна само когато е публикувана като част от инструкциите за монтаж и експлоатация на Grundfos.

CZ: ES prohlášení o shodě

My firma Grundfos prohlašujeme na svou plnou odpovědnost, že výrobky DDA, DDC a DDE, na něž se toto prohlášení vztahuje, jsou v souladu s ustanoveními směrnice Rady pro sblížení právních předpisů členských států Evropského společenství v oblastech:

– Směrnice pro strojní zařízení (2006/42/ES).
  Použité normy: EN 809: 1998, EN ISO 12100-1+A1: 2009, EN ISO 12100-2+A1: 2009.
– Směrnice pro nízkonapěťové aplikace (2006/95/ES). *
  Použitá norma: EN 61010-1: 2001 (druhé vydání).
– Směrnice pro elektromagnetickou kompatibilitu (EMC) (2004/108/ES).
  Použité normy: EN 61326-1: 2006, EN 61000-3-2: 2006+A1: 2009+A2: 2009, EN 61000-3-3: 2008.

* Pouze pro výrobky s provozním napětím > 50 VAC nebo > 75 VDC.

Toto ES prohlášení o shodě je platné pouze tehdy, pokud je zveřejněno jako součást instalačních a provozních návodů Grundfos.

DK: EF-overensstemmelseserklæring

Vi, Grundfos, erklærer under ansvar at produkterne DDA, DDC og DDE som denne erklæring omhandler, er i overensstemmelse med disse af Rådets direktiver om indbyrdes tilnærmelse til EF-medlemsstaternes lovgivning:

– Maskindirektivet (2006/42/EF).
  Anvendte standarder: EN 809: 1998, EN ISO 12100-1+A1: 2009, EN ISO 12100-2+A1: 2009.
– Lavspændingsdirektivet (2006/95/EF). *
  Anvendt standard: EN 61010-1: 2001 (anden udgave).
– EMC-direktivet (2004/108/EF).
  Anvendte standarder: EN 61326-1: 2006, EN 61000-3-2: 2006+A1: 2009+A2: 2009, EN 61000-3-3: 2008.

* Gælder kun for produkter med driftsspænding > 50 VAC eller > 75 VDC.

Denne EF-overensstemmelseserklæring er kun gyldig når den publiceres som en del af Grundfos-monterings- og driftsinstruktionen.

DE: EG-Konformitätserklärung

Wir, Grundfos, erklären in alleiniger Verantwortung, dass die Produkte DDA, DDC und DDE, auf die sich diese Erklärung bezieht, mit den folgenden Richtlinien des Rates zur Angleichung der Rechtsvorschriften der EU-Mitgliedsstaaten übereinstimmen:

– Maschinenrichtlinie (2006/42/EG).
  Normen, die verwendet wurden: EN 809: 1998, EN ISO 12100-1+A1: 2009, EN ISO 12100-2+A1: 2009.
– Niederspannungsrichtlinie (2006/95/EG). *
  Norm, die verwendet wurde: EN 61010-1: 2001 (zweite Ausgabe).
– EMV-Richtlinie (2004/108/EG).
  Normen, die verwendet wurden: EN 61326-1: 2006, EN 61000-3-2: 2006+A1: 2009+A2: 2009, EN 61000-3-3: 2008.

* Nur für Produkte mit Betriebsspannungen > 50 VAC oder > 75 VDC.

Diese EG-Konformitätserklärung gilt nur, wenn sie in Verbindung mit der Grundfos Montage- und Betriebsanleitung veröffentlicht wird.

EE: EL vastavusdeklaratsioon

Meie, Grundfos, deklareerime enda ainuvastutusel, et tooted DDA, DDC ja DDE, mille kohta käesolev juhend käib, on vastavuses EÜ Nõukogu direktiividega EMÜ liikmesriikide seaduste ühitamise kohta, mis käsitlevad:

– Masinate ohutus (2006/42/EC).
  Kasutatud standardid: EN 809: 1998, EN ISO 12100-1+A1: 2009, EN ISO 12100-2+A1: 2009.
– Madalpinge direktiiv (2006/95/EC). *
  Kasutatud standard: EN 61010-1: 2001 (teine väljaanne).
– Elektromagnetiline ühilduvus (EMC direktiiv) (2004/108/EC).
  Kasutatud standardid: EN 61326-1: 2006, EN 61000-3-2: 2006+A1: 2009+A2: 2009, EN 61000-3-3: 2008.

* Ainult toodete jaoks mille tööpinge on suurem kui > 50 VAC või suurem kui > 75 VDC.

Käesolev EL-i vastavusdeklaratsioon kehtib ainult siis, kui see avaldatakse Grundfosi paigaldus- ja kasutusjuhendi osana.

GR: Δήλωση συμμόρφωσης EC

Εμείς, η Grundfos, δηλώνουμε με αποκλειστικά δική μας ευθύνη ότι τα προϊόντα DDA, DDC και DDE στα οποία αναφέρεται η παρούσα δήλωση, συμμορφώνονται με τις εξής Οδηγίες του Συμβουλίου περί προσέγγισης των νομοθεσιών των κρατών μελών της ΕΕ:

– Οδηγία για μηχανήματα (2006/42/EC).
  Πρότυπα που χρησιμοποιήθηκαν: EN 809: 1998, EN ISO 12100-1+A1: 2009, EN ISO 12100-2+A1: 2009.
– Οδηγία χαμηλής τάσης (2006/95/EC). *
  Πρότυπο που χρησιμοποιήθηκε: EN 61010-1: 2001 (δεύτερη έκδοση).
– Οδηγία Ηλεκτρομαγνητικής Συμβατότητας (EMC) (2004/108/EC).
  Πρότυπα που χρησιμοποιήθηκαν: EN 61326-1: 2006, EN 61000-3-2: 2006+A1: 2009+A2: 2009, EN 61000-3-3: 2008.

* Μόνο για προϊόντα με τάση λειτουργίας > 50 VAC ή > 75 VDC.

Αυτή η δήλωση συμμόρφωσης EC ισχύει μόνον όταν συνοδεύει τις οδηγίες εγκατάστασης και λειτουργίας της Grundfos.

ES: Declaración CE de conformidad

Nosotros, Grundfos, declaramos bajo nuestra entera responsabilidad que los productos DDA, DDC y DDE, a los cuales se refiere esta declaración, están conformes con las Directivas del Consejo en la aproximación de las leyes de las Estados Miembros del EM:

– Directiva de Maquinaria (2006/42/CE).
  Normas aplicadas: EN 809: 1998, EN ISO 12100-1+A1: 2009, EN ISO 12100-2+A1: 2009.
– Directiva de Baja Tensión (2006/95/CE). *
  Norma aplicada: EN 61010-1: 2001 (segunda edición).
– Directiva EMC (2004/108/CE).
  Normas aplicadas: EN 61326-1: 2006, EN 61000-3-2: 2006+A1: 2009+A2: 2009, EN 61000-3-3: 2008.

* Sólo para productos con tensión de funcionamiento > 50 VAC o > 75 VDC.

Esta declaración CE de conformidad sólo es válida cuando se publique como parte de las instrucciones de instalación y funcionamiento de Grundfos.

FR: Déclaration de conformité CE

Nous, Grundfos, déclarons sous notre seule responsabilité, que les produits DDA, DDC et DDE, auxquels se réfère cette déclaration, sont conformes aux Directives du Conseil concernant le rapprochement des législations des Etats membres CE relatives aux normes énoncées ci-dessous :

– Directive Machines (2006/42/CE).
  Normes utilisées : EN 809: 1998, EN ISO 12100-1+A1: 2009, EN ISO 12100-2+A1: 2009.
– Directive Basse Tension (2006/95/CE). *
  Norme utilisée : EN 61010-1: 2001 (deuxième édition).
– Directive Compatibilité Electromagnétique CEM (2004/108/CE).
  Normes utilisées : EN 61326-1: 2006, EN 61000-3-2: 2006+A1: 2009+A2: 2009, EN 61000-3-3: 2008.

* Convient uniquement aux produits avec tension de service > 50 VAC ou > 75 VDC.

Cette déclaration de conformité CE est uniquement valide lors de sa publication dans la notice d'installation et de fonctionnement Grundfos.

HR: EZ izjava o usklađenosti

Mi, Grundfos, izjavljujemo pod vlastitom odgovornošću da je proizvod DDA, DDC i DDE, na koji se ova izjava odnosi, u skladu s direktivama ovog Vijeća o usklađivanju zakona država članica EU:

– Direktiva za strojeve (2006/42/EZ).
  Korištene norme: EN 809: 1998, EN ISO 12100-1+A1: 2009, EN ISO 12100-2+A1: 2009.
– Direktiva za niski napon (2006/95/EZ). *
  Korištena norma: EN 61010-1: 2001 (drugo izdanje).
– Direktiva za elektromagnetsku kompatibilnost (2004/108/EZ).
  Korištene norme: EN 61326-1: 2006, EN 61000-3-2: 2006+A1: 2009+A2: 2009, EN 61000-3-3: 2008.

* Samo za proizvode s radnim naponom > 50 VAC ili > 75 VDC.

Ova EZ izjava o suklađnosti važeća je jedino kada je izdana kao dio Grundfos montažnih i pogonskih uputa.

IT: Dichiarazione di conformità CE

Grundfos dichiara sotto la sua esclusiva responsabilità che i prodotti DDA, DDC e DDE, ai quali si riferisce questa dichiarazione, sono conformi alle seguenti direttive del Consiglio riguardanti il riavvicinamento delle legislazioni degli Stati membri CE:

– Direttiva Macchine (2006/42/CE).
  Norme applicate: EN 809: 1998, EN ISO 12100-1+A1: 2009, EN ISO 12100-2+A1: 2009.
– Direttiva Bassa Tensione (2006/95/CE). *
  Norma applicata: EN 61010-1: 2001 (seconda edizione).
– Direttiva EMC (2004/108/CE).
  Norme applicate: EN 61326-1: 2006, EN 61000-3-2: 2006+A1: 2009+A2: 2009, EN 61000-3-3: 2008.

* Solo per prodotti con tensione di alimentazione > 50 VAC o > 75 VDC.

Questa dichiarazione di conformità CE è valida solo quando pubblicata come parte delle istruzioni di installazione e funzionamento Grundfos.

LV: EK paziņojums par atbilstību prasībām

Sabiedrība GRUNDFOS ar pilnu atbildību dara zināmu, ka produkti DDA, DDC un DDE, uz kuriem attiecas šis paziņojums, atbilst šādām Padomes direktīvām par tuvināšanos EK dalībvalstu likumdošanas normām:

– Mašīnbūves direktīva (2006/42/EK).
  Piemērotie standarti: EN 809: 1998, EN ISO 12100-1+A1: 2009, EN ISO 12100-2+A1: 2009.
– Zema sprieguma direktīva (2006/95/EK). *
  Piemērotais standarts: EN 60335-1: 2006
– Elektromagnētiskās saderības direktīva (2004/108/EK).
  Piemērotie standarti: EN 61326-1: 2006, EN 61000-3-2: 2006+A1: 2009+A2: 2009, EN 61000-3-3: 2008.

* Tikai produktiem, kuru darba spriegums ir > 50 V maiņstrāvas vai > 75 V līdzstrāvas.

Šī EK atbilstības deklarācija ir derīga vienīgi tad, ja ir publicēta kā daļa no GRUNDFOS uzstādīšanas un ekspluatācijas instrukcijām.

LT: EB atitikties deklaracija

Mes, Grundfos, su visa atsakomybe pareiškiame, kad gaminiai DDA, DDC ir DDE, kuriems skirta ši deklaracija, atitinka šias Tarybos Direktyvas dėl Europos Ekonominės Bendrijos šalių narių įstatymų suderinimo:

– Mašinų direktyva (2006/42/EB).
  Taikomi standartai: EN 809: 1998, EN ISO 12100-1+A1: 2009, EN ISO 12100-2+A1: 2009.
– Žemų įtampų direktyva (2006/95/EB). *
  Taikomas standartas: EN 61010-1: 2001 (antrasis leidimas).
– EMS direktyva (2004/108/EB).
  Taikomi standartai: EN 61326-1: 2006, EN 61000-3-2: 2006+A1: 2009+A2: 2009, EN 61000-3-3: 2008.

* Tik produktams, kurių darbinė įtampa yra > 50 V kintama arba > 75 V nuolatinė.

Ši EB atitikties deklaracija galioja tik tuo atveju, kai yra pateikta kaip "Grundfos" įrengimo ir naudojimo instrukcijos dalis.

HU: EK megfelelőségi nyilatkozat

Mi, a Grundfos, egyedüli felelősséggel kijelentjük, hogy a DDA, DDC és DDC termékek, amelyekre jelen nyilatkozik vonatkozik, megfelelnek az Európai Unió tagállamainak jogi irányelveit összehangoló tanács alábbi előírásainak:

– Gépek (2006/42/EK).
  Alkalmazott szabványok: EN 809: 1998, EN ISO 12100-1+A1: 2009, EN ISO 12100-2+A1: 2009.
– Kisfeszültségű Direktíva (2006/95/EK). *
  Alkalmazott szabvány: EN 61010-1: 2001 (második kiadás).
– EMC Direktíva (2004/108/EK).
  Alkalmazott szabványok: EN 61326-1: 2006, EN 61000-3-2: 2006+A1: 2009+A2: 2009, EN 61000-3-3: 2008.

* Csak a > 50 VAC vagy > 75 VDC feszültségnél magasabb üzemi feszültségű berendezések.

Ez az EK megfelelőségi nyilatkozat kizárólag akkor érvényes, ha Grundfos telepítési és üzemeltetési utasítás részeként kerül kiadásra.

NL: EC overeenkomstigheidsverklaring

Wij, Grundfos, verklaren geheel onder eigen verantwoordelijkheid dat de producten DDA, DDC en DDE waarop deze verklaring betrekking heeft, in overeenstemming zijn met de Richtlijnen van de Raad in zake de onderlinge aanpassing van de wetgeving van de EG Lidstaten betreffende:

– Machine Richtlijn (2006/42/EC).
  Gebruikte normen: EN 809: 1998, EN ISO 12100-1+A1: 2009, EN ISO 12100-2+A1: 2009.
– Laagspannings Richtlijn (2006/95/EC). *
  Gebruikte norm: EN 61010-1: 2001 (tweede editie).
– EMC Richtlijn (2004/108/EC).
  Gebruikte normen: EN 61326-1: 2006, EN 61000-3-2: 2006+A1: 2009+A2: 2009, EN 61000-3-3: 2008.

* Alleen voor producten met bedrijfspanning > 50 VAC of > 75 VDC.

Deze EC overeenkomstigheidsverklaring is alleen geldig wanneer deze gepubliceerd is als onderdeel van de Grundfos installatie- en bedieningsinstructies.

UA: Свідчення про відповідність вимогам ЄС

Компанія Grundfos заявляє про свою виключну відповідальність за те, що продукти DDA, DDC та DDE, на які поширюється дана декларація, відповідають таким рекомендаціям Ради з уніфікації правових норм країн - членів ЄС:

– Механічні прилади (2006/42/ЄС).
  Стандарти, що застосовувалися: EN 809: 1998, EN ISO 12100-1+A1: 2009, EN ISO 12100-2+A1: 2009.
– Низька напруга (2006/95/ЄС). *
  Стандарти, що застосовувалися: EN 61010-1: 2001 (друге видання).
– Електромагнітна сумісність (2004/108/ЄС).
  Стандарти, що застосовувалися: EN 61326-1: 2006, EN 61000-3-2: 2006+A1: 2009+A2: 2009, EN 61000-3-3: 2008.

* Тільки для продуктів з робочою напругою > 50 VAC або > 75 VDC.

Ця декларація відповідності ЄС дійсна тільки в тому випадку, якщо публікується як частина інструкцій Grundfos з монтажу та експлуатації.

PL: Deklaracja zgodności WE

My, Grundfos, oświadczamy z pełną odpowiedzialnością, że nasze wyroby DDA, DDC oraz DDE, których deklaracja niniejsza dotyczy, są zgodne z następującymi wytycznymi Rady d/s ujednolicenia przepisów prawnych krajów członkowskich WE:

– Dyrektywa Maszynowa (2006/42/WE).
  Zastosowane normy: EN 809: 1998, EN ISO 12100-1+A1: 2009, EN ISO 12100-2+A1: 2009.
– Dyrektywa Niskonapięciowa (LVD) (2006/95/WE). *
  Zastosowana norma: EN 61010-1: 2001 (drugie wydanie).
– Dyrektywa EMC (2004/108/WE).
  Zastosowane normy: EN 61326-1: 2006, EN 61000-3-2: 2006+A1: 2009+A2: 2009, EN 61000-3-3: 2008.

* Dotyczy produktów o napięciu zasilania > 50 VAC lub > 75 VDC.

Deklaracja zgodności WE jest ważna tylko i wyłącznie wtedy kiedy jest opublikowana przez firmę Grundfos i umieszczona w instrukcji montażu i eksploatacji.

PT: Declaração de conformidade CE

A Grundfos declara sob sua única responsabilidade que os produtos DDA, DDC e DDE, aos quais diz respeito esta declaração, estão em conformidade com as seguintes Directivas do Conselho sobre a aproximação das legislações dos Estados Membros da CE:

– Directiva Máquinas (2006/42/CE).
  Normas utilizadas: EN 809: 1998, EN ISO 12100-1+A1: 2009, EN ISO 12100-2+A1: 2009.
– Directiva Baixa Tensão (2006/95/CE). *
  Norma utilizada: EN 61010-1: 2001 (segunda edição).
– Directiva EMC (compatibilidade electromagnética) (2004/108/CE).
  Normas utilizadas: EN 61326-1: 2006, EN 61000-3-2: 2006+A1: 2009+A2: 2009, EN 61000-3-3: 2008.

* Apenas para produtos com tensão de funcionamento > 50 VCA ou > 75 VCC.

Esta declaração de conformidade CE é apenas válida quando publicada como parte das instruções de instalação e funcionamento Grundfos.

RU: Декларация о соответствии ЕС

Мы, компания Grundfos, со всей ответственностью заявляем, что изделия DDA, DDC и DDE, к которым относится настоящая декларация, соответствуют следующим Директивам Совета Евросоюза об унификации законодательных предписаний стран-членов ЕС:

– Механические устройства (2006/42/ЕС).
  Применявшиеся стандарты: EN 809: 1998, EN ISO 12100-1+A1: 2009, EN ISO 12100-2+A1: 2009.
– Низковольтное оборудование (2006/95/ЕС). *
  Применявшийся стандарт: EN 61010-1: 2001 (второе издание).
– Электромагнитная совместимость (2004/108/ЕС).
  Применявшиеся стандарты: EN 61326-1: 2006, EN 61000-3-2: 2006+A1: 2009+A2: 2009, EN 61000-3-3: 2008.

* Только для изделий с рабочим напряжением > 50 В AC или > 75 В DC.

Данная декларация о соответствии ЕС имеет силу только в случае публикации в составе инструкции по монтажу и эксплуатации на продукцию производства компании Grundfos.

RO: Declaraţie de conformitate CE

Noi, Grundfos, declarăm pe propria răspundere că produsele DDA, DDC şi DDE, la care se referă această declaraţie, sunt în conformitate cu aceste Directive de Consiliu asupra armonizării legilor Statelor Membre CE:

– Directiva Utilaje (2006/42/CE).
  Standarde utilizate: EN 809: 1998, EN ISO 12100-1+A1: 2009, EN ISO 12100-2+A1: 2009.
– Directiva Tensiune Joasă (2006/95/CE). *
  Standard utilizat: EN 61010-1: 2001 (a doua editie).
– Directiva EMC (2004/108/CE).
  Standarde utilizate: EN 61326-1: 2006, EN 61000-3-2: 2006+A1: 2009+A2: 2009, EN 61000-3-3: 2008.

* Numai pentru produse cu tensiunea de funcţionare > 50 VAC ori > 75 VDC.

Această declaraţie de conformitate CE este valabilă numai când este publicată ca parte a instrucţiunilor Grundfos de instalare şi funcţionare.

SK: Prehlásenie o konformite EÚ

My firma Grundfos prehlasujeme na svoju plnú zodpovednosť, že výrobky DDA, DDC a DDE, na ktoré sa toto prehlásenie vzťahuje, sú v súlade s ustanovením smernice Rady pre zblíženie právnych predpisov členských štátov Európskeho spoločenstva v oblastiach:

– Smernica pre strojové zariadenie (2006/42/EC).
  Použité normy: EN 809: 1998, EN ISO 12100-1+A1: 2009, EN ISO 12100-2+A1: 2009.
– Smernica pre nízkonapäťové aplikácie (2006/95/EC). *
  Použitá norma: EN 61010-1: 2001 (druhé vydanie).
– Smernica pre elektromagnetickú kompatibilitu (2004/108/EC).
  Použité normy: EN 61326-1: 2006, EN 61000-3-2: 2006+A1: 2009+A2: 2009, EN 61000-3-3: 2008.

* Len pre produkty s prevádzkovým napätím > 50 VAC or > 75 VDC.

Toto prehlásenie o konformite ES je platné iba vtedy, ak je zverejnené ako súčasť montážnych a prevádzkových pokynov Grundfos.

SI: ES izjava o skladnosti

V Grundfosu s polno odgovornostjo izjavljamo, da so naši izdelki DDA, DDC in DDE, na katere se ta izjava nanaša, v skladu z naslednjimi direktivami Sveta o približevanju zakonodaje za izenačevanje pravnih predpisov držav članic ES:

– Direktiva o strojih (2006/42/ES).
  Uporabljeni normi: EN 809: 1998, EN ISO 12100-1+A1: 2009, EN ISO 12100-2+A1: 2009.
– Direktiva o nizki napetosti (2006/95/ES). *
  Uporabljena norma: EN 61010-1: 2001 (druga izdaja).
– Direktiva o elektromagnetni združljivosti (EMC) (2004/108/ES).
  Uporabljeni normi: EN 61326-1: 2006, EN 61000-3-2: 2006+A1: 2009+A2: 2009, EN 61000-3-3: 2008.

* Samo za izdelke z delovno napetostjo, večjo od 50 V AC ali manjšo od 75 V DC.

ES izjava o skladnosti velja samo kadar je izdana kot del Grundfos instalacije in navodil delovanja.

RS: EC deklaracija o konformitetu

Mi, Grundfos, izjavljujemo pod vlastitom odgovornošću da je proizvod DDA, DDC i DDE, na koji se ova izjava odnosi, u skladu sa direktivama Saveta za usklađivanje zakona država članica EU:

- Direktiva za mašine (2006/42/EC).
  Korišćeni standardi: EN 809: 1998,
  EN ISO 12100-1+A1: 2009, EN ISO 12100-2+A1: 2009.
- Direktiva niskog napona (2006/95/EC). *
  Korišćen standard: EN 61010-1: 2001 (drugo izdanje).
- EMC direktiva (2004/108/EC).
  Korišćeni standardi: EN 61326-1: 2006,
  EN 61000-3-2: 2006+A1: 2009+A2: 2009, EN 61000-3-3: 2008.

* Samo za proizvode sa radnim naponom > 50 VAC ili > 75 VDC.

Ova EC deklaracija o konformitetu važeća je jedino kada je izdata kao deo Grundfos uputstava za instalaciju i rad.

FI: EY-vaatimustenmukaisuusvakuutus

Me, Grundfos, vakuutamme omalla vastuullamme, että tuotteet DDA, DDC ja DDE, joita tämä vakuutus koskee, ovat EY:n jäsenvaltioiden lainsäädännön yhdenmukaistamiseen tähtäävien Euroopan neuvoston direktiivien vaatimusten mukaisia seuraavasti:

- Konedirektiivi (2006/42/EY).
  Sovellettavat standardit: EN 809: 1998,
  EN ISO 12100-1+A1: 2009, EN ISO 12100-2+A1: 2009.
- Pienjännitedirektiivi (2006/95/EY). *
  Sovellettu standardi: EN 61010-1: 2001 (uudistettu versio).
- EMC-direktiivi (2004/108/EY).
  Sovellettavat standardit: EN 61326-1: 2006,
  EN 61000-3-2: 2006+A1: 2009+A2: 2009, EN 61000-3-3: 2008.

* Vain laitteille, joiden käyttöjännite on > 50 VAC tai > 75 VDC.

Tämä EY-vaatimustenmukaisuusvakuutus on voimassa vain, kun se julkaistaan osana Grundfosin asennus- ja käyttöohjeita.

SE: EG-försäkran om överensstämmelse

Vi, Grundfos, försäkrar under ansvar att produkterna DDA, DDC och DDE, som omfattas av denna försäkran, är i överensstämmelse med rådets direktiv om inbördes närmande till EU-medlemsstaternas lagstiftning, avseende:

- Maskindirektivet (2006/42/EG).
  Tillämpade standarder: EN 809: 1998,
  EN ISO 12100-1+A1: 2009, EN ISO 12100-2+A1: 2009.
- Lågspänningsdirektivet (2006/95/EG). *
  Tillämpad standard: EN 61010-1: 2001 (andra upplagan).
- EMC-direktivet (2004/108/EG).
  Tillämpade standarder: EN 61326-1: 2006,
  EN 61000-3-2: 2006+A1: 2009+A2: 2009, EN 61000-3-3: 2008.

* Endast för produkter med driftspänning > 50 VAC eller > 75 VDC.

Denna EG-försäkran om överensstämmelse är endast giltig när den publiceras som en del av Grundfos monterings- och driftsinstruktion.

TR: EC uygunluk bildirgesi

Grundfos olarak bu beyannameye konu olan DDA, DDC ve DDE ürünlerinin, AB Üyesi Ülkelerin kanunlarını birbirine yaklaştırma üzerine Konsey Direktifleriyle uyumlu olduğunun yalnızca bizim sorumluluğumuz altında olduğunu beyan ederiz:

- Makineler Yönetmeliği (2006/42/EC).
  Kullanılan standartlar: EN 809: 1998,
  EN ISO 12100-1+A1: 2009, EN ISO 12100-2+A1: 2009.
- Düşük Voltaj Yönetmeliği (2006/95/EC). *
  Kullanılan standart: EN 61010-1: 2001 (ikinci baskı).
- EMC Diretifi (2004/108/EC).
  Kullanılan standartlar: EN 61326-1: 2006,
  EN 61000-3-2: 2006+A1: 2009+A2: 2009, EN 61000-3-3: 2008.

* Çalışma voltajı yalnızca > 50 VAC veya > 75 VDC değerinde olan ürünler için.

İşbu EC uygunluk bildirgesi, yalnızca Grundfos kurulum ve çalıştırma talimatlarının bir parçası olarak basıldığı takdirde geçerlilik kazanmaktadır.

CN: EC 产品合格声明书

我们格兰富在我们的全权责任下声明，产品 DDA, DDC 和 DDE，即该合格证所指之产品，符合欧共体使其成员国法律趋于一致的以下欧共理事会指令：

- 机械设备指令 (2006/42/EC)。
  所用标准 : EN 809: 1998,
  EN ISO 12100-1+A1: 2009, EN ISO 12100-2+A1: 2009。
- 低电压指令 (2006/95/EC)。*
  所用标准 : EN 61010-1: 2001 (第 2 版)。
- 电磁兼容性指令 (2004/108/EC)。
  所用标准 : EN 61326-1: 2006,
  EN 61000-3-2: 2006+A1: 2009+A2: 2009, EN 61000-3-3: 2008.

* 仅适用于工作电压 > 50 VAC 或 > 75 VDC 的产品。

本 EC 合格性声明仅在作为格兰富安装与操作指导手册的一部分时有效。

JP: EC 適合宣言

Grundfos は、その責任の下に、DDA, DDC 製品および DDE 製品が EC 加盟諸国の法規に関連する、以下の評議会指令に適合していることを宣言します：

- **機械指令（2006/42/EC）。**
  適用規格：EN 809: 1998, EN ISO 12100-1+A1: 2009,
  EN ISO 12100-2+A1: 2009。
- **低電圧指令（2006/95/EC）。***
  適用規格：EN 61010-1: 2001 (第 2 版)。
- **EMC 指令（2004/108/EC）。**
  適用規格：EN 61326-1: 2006, EN 61000-3-2: 2006+A1: 2009+A2: 2009, EN 61000-3-3: 2008。

*** 動作電圧 > 50 VAC または > 75 VDC。**

この EC 適合宣言は、グルンドフォス取扱説明書の一部に掲載される場合のみ有効です。

KO: EC 적합성 선언

Grundfos 에서는 자사의 단독 책임에 따라 이 선언과 관련된 DDA, DDC 및 DDE 제품이 EC 회원국 법률에 기반한 다음 이사회 지침을 준수함을 선언합니다 :

- 기계류 지침 (2006/42/EC).
  사용된 표준 : EN 809: 1998,
  EN ISO 12100-1+A1: 2009, EN ISO 12100-2+A1: 2009.
- 저전압 지침 (2006/95/EC). *
  사용된 표준 : EN 61010-1: 2001 (제 2 출간).
- EMC 지침 (2004/108/EC).
  사용된 표준 : EN 61326-1: 2006,
  EN 61000-3-2: 2006+A1: 2009+A2: 2009,
  EN 61000-3-3: 2008.

* 작동 전압 50 VAC 미만 또는 75 VDC 미만인 제품에만 해당 .

본 EC 인증은 그런포스에서 인쇄 배포한 설치 가이드 및 작업 매뉴얼에 포함되어 발행되었을 경우에만 유효합니다 .

Pfinztal, 1 June 2011

Ulrich Stemick
Technical Director
Grundfos Water Treatment GmbH
Reetzstr. 85, D-76327 Pfinztal, Germany

Person authorised to compile technical file and empowered to sign the EC declaration of conformity.

English (GB) Installation and operating instructions

Original installation and operating instructions.

CONTENTS

		Page
1.	**Safety instructions**	**7**
1.1	Symbols used in this document	7
1.2	Qualification and training of personnel	7
1.3	Safety instructions for the operator/user	7
1.4	Safety of the system in the event of a failure in the dosing pump	7
1.5	Dosing chemicals	7
2.	**General information**	**8**
2.1	Applications	8
2.2	Improper operating methods	8
2.3	Symbols on the pump	9
2.4	Warranty	9
2.5	Nameplate	9
2.6	Type key	10
2.7	Product overview	11
3.	**Technical data / Dimensions**	**12**
3.1	Technical data	12
3.2	Dimensions	14
4.	**Assembly and installation**	**15**
4.1	Pump assembly	15
4.1.1	Requirements	15
4.1.2	Align and install mounting plate	15
4.1.3	Engage pump in mounting plate	15
4.1.4	Adjusting control cube position	15
4.2	Hydraulic connection	16
4.3	Electrical connection	17
5.	**Start-up**	**19**
5.1	Setting the menu language	19
5.2	Deaerating the pump	20
5.3	Calibrating the pump	20
6.	**Operation**	**22**
6.1	Control elements	22
6.2	Display and symbols	22
6.2.1	Navigation	22
6.2.2	Operating states	22
6.2.3	Sleep mode (energy-saving mode)	22
6.2.4	Overview of display symbols	23
6.3	Main menus	24
6.3.1	Operation	24
6.3.2	Info	24
6.3.3	Alarm	24
6.3.4	Setup	24
6.4	Operation modes	25
6.4.1	Manual	25
6.4.2	Pulse	25
6.4.3	Analog 0/4-20 mA	26
6.4.4	Batch (pulse-based)	27
6.4.5	Dosing timer cycle	28
6.4.6	Dosing timer week	28
6.5	Analog output	29
6.6	SlowMode	29
6.7	FlowControl	30
6.8	Pressure monitoring	31
6.8.1	Pressure setting ranges	31
6.8.2	Calibration of pressure sensor	31
6.9	Flow measurement	32
6.10	AutoFlowAdapt	32
6.11	Auto deaeration	32
6.12	Key lock	32
6.12.1	Temporary deactivation	32
6.12.2	Deactivation	32
6.13	Display Setup	33
6.13.1	Units	33
6.13.2	Additional display	33
6.14	Time+date	33
6.15	Bus communication	33
6.15.1	GENIbus communication	33
6.15.2	Profibus® communication	34
6.16	Inputs/Outputs	35
6.16.1	Relay outputs	35
6.16.2	External stop	35
6.16.3	Empty and Low level signals	36
6.17	Basic settings	36
7.	**Service**	**36**
7.1	Cleaning	36
7.2	Service system	36
7.3	Perform service	37
7.3.1	Dosing head overview	37
7.3.2	Dismantling the diaphragm and valves	37
7.3.3	Reassembling the diaphragm and valves	37
7.4	Resetting the service system	38
7.5	Repairs	38
8.	**Faults**	**38**
8.1	List of faults	39
8.1.1	Faults with error message	39
8.1.2	General faults	40
9.	**Disposal**	**41**

Warning

Prior to installation, read these installation and operating instructions. Installation and operation must comply with local regulations and accepted codes of good practice.

1. Safety instructions

These installation and operating instructions contain general instructions that must be observed during installation, operation and maintenance of the pump. It must therefore be read by the installation engineer and the relevant qualified operator prior to installation and start-up, and must be available at the installation location at all times.

1.1 Symbols used in this document

Warning

If these safety instructions are not observed, it may result in personal injury.

Caution

If these safety instructions are not observed, it may result in malfunction or damage to the equipment.

Note

Notes or instructions that make the job easier and ensure safe operation.

1.2 Qualification and training of personnel

The personnel responsible for the installation, operation and service must be appropriately qualified for these tasks. Areas of responsibility, levels of authority and the supervision of the personnel must be precisely defined by the operator. If necessary, the personnel must be trained appropriately.

Risks of not observing the safety instructions

Non-observance of the safety instructions may have dangerous consequences for the personnel, the environment and the pump and may result in the loss of any claims for damages.

It may lead to the following hazards:

- Personal injury from exposure to electrical, mechanical and chemical influences.
- Damage to the environment and personal injury from leakage of harmful substances.

1.3 Safety instructions for the operator/user

The safety instructions described in these instructions, existing national regulations on health protection, environmental protection and for accident prevention and any internal working, operating and safety regulations of the operator must be observed.

Information attached to the pump must be observed.

Leakages of dangerous substances must be disposed of in a way that is not harmful to the personnel or the environment.

Damage caused by electrical energy must be prevented, see the regulations of the local electricity supply company.

Caution

Before any work to the pump, the pump must be in the "Stop" operating state or be disconnected from the mains. The system must be pressureless!

Note

The mains plug is the separator separating the pump from the mains.

Only original accessories and original spare parts should be used. Using other parts can result in exemption from liability for any resulting consequences.

1.4 Safety of the system in the event of a failure in the dosing pump

The dosing pump was designed according to the latest technologies and is carefully manufactured and tested.

If it fails regardless of this, the safety of the overall system must be ensured. Use the relevant monitoring and control functions for this.

Caution

Make sure that any chemicals that are released from the pump or any damaged lines do not cause damage to system parts and buildings.

The installation of leak monitoring solutions and drip trays is recommended.

1.5 Dosing chemicals

Warning

Before switching the supply voltage back on, the dosing lines must be connected in such a way that any chemicals in the dosing head cannot spray out and put people at risk.

The dosing medium is pressurised and can be harmful to health and the environment.

Warning

When working with chemicals, the accident prevention regulations applicable at the installation site should be applied (e.g. wearing protective clothing).

Observe the chemical manufacturer's safety data sheets and safety instructions when handling chemicals!

Warning

If the diaphragm leaks or is broken, dosing liquid will escape from the drain opening on the dosing head (see fig. 3).

Take suitable precautions to prevent harm to health and damage to property from escaping dosing liquid!

Check daily whether liquid is escaping from the discharge opening!

Changing the diaphragm, see section 7. Service.

Caution

A deaeration hose, which is routed into a container, e.g. a drip tray, must be connected to the deaeration valve.

Caution

The dosing medium must be in liquid aggregate state!

Observe the freezing and boiling points of the dosing medium!

The resistance of the parts that come into contact with the dosing medium, such as the dosing head, valve ball, gaskets and lines, depends on the medium, media temperature and operating pressure.

Caution

Ensure that parts in contact with the dosing media are resistant to the dosing medium under operating conditions, see data booklet!

Should you have any questions regarding the material resistance and suitability of the pump for specific dosing media, please contact Grundfos.

2. General information

The DDA dosing pump is a self-priming diaphragm pump. It consists of a housing with stepper motor and electronics, a dosing head with diaphragm and valves and the control cube.

Excellent dosing features of the pump:

- Optimal intake even with degassing media, as the pump always works at full suction stroke volume.
- Continuous dosing, as the medium is sucked up with a short suction stroke, regardless of the current dosing flow, and dosed with the longest possible dosing stroke.

2.1 Applications

The pump is suitable for liquid, non-abrasive, non-flammable and non-combustible media strictly in accordance with the instructions in these installation and operating instructions.

Areas of application

- Drinking water treatment
- Wastewater treatment
- Swimming pool water treatment
- Boiler water treatment
- CIP (Clean-In-Place)
- Cooling water treatment
- Process water treatment
- Wash plants
- Chemical industry
- Ultrafiltration processes and reverse osmosis
- Irrigation
- Paper and pulp industry
- Food and beverage industries

2.2 Improper operating methods

The operational safety of the pump is only guaranteed if it is used in accordance with section *2.1 Applications*.

Warning

Other applications or the operation of pumps in ambient and operating conditions, which are not approved, are considered improper and are not permitted. Grundfos cannot be held liable for any damage resulting from incorrect use.

Warning

The pump is NOT approved for operation in potentially explosive areas!

Warning

A sunscreen is required for outdoor installation!

Caution

Frequent disengagement from the mains voltage, e.g. via a relay, can result in damage to the pump electronics and in the breakdown of the pump. The dosing accuracy is also reduced as a result of internal start procedures.

Do not control the pump via the mains voltage for dosing purposes!

Only use the "External stop" function to start and stop the pump!

2.3 Symbols on the pump

Symbol	Description
	Indication of universally dangerous spot.
	In case of emergency and prior to all maintenance work and repairs, take the mains plug out of the mains supply!
	The device complies with electrical safety class II.
	Connection for deaeration hose at dosing head. If the deaeration hose is not correctly connected, danger will arise due to possible leakage of dosing liquid!

2.4 Warranty

A guarantee claim in accordance with our general terms of sale and delivery is only valid if the following requirements are fulfilled:

- The pump is used in accordance with the information within this manual.
- The pump is not dismantled or incorrectly handled.
- The maintenance is carried out by authorised and qualified personnel.
- Original spare parts are used for repairs during maintenance.

2.5 Nameplate

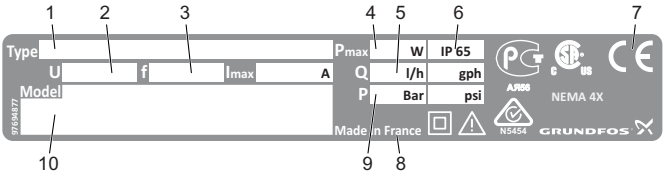

TM04 8144 2011

Fig. 1 Nameplate

Pos.	Description	Pos.	Description
1	Type designation	6	Enclosure class
2	Voltage	7	Mark of approval, CE mark, etc.
3	Frequency	8	Country of origin
4	Power consumption	9	Max. operating pressure
5	Max. dosing flow	10	Model

2.6 Type key

The type key is used to identify the precise pump and is not used for configuration purposes.

Code	Example: DDA 7.5- 16 AR- PP/ V/ C- F- 3 1 U2U2 F G
	Pump type
	Max. flow [l/h]
	Max. pressure [bar]
	Control variant
AR	Standard
FC	AR with FlowControl
FCM	FC with integrated flow measurement
	Dosing head material
PP	Polypropylene
PVC	PVC (polyvinyl chloride, only up to 10 bar)
PV	PVDF (polyvinylidene fluoride)
SS	Stainless steel DIN 1.4401
	Gasket material
E	EPDM
V	FKM
T	PTFE
	Valve ball material
C	Ceramic
SS	Stainless steel DIN 1.4401
	Control cube position
F	Front-mounted (can be changed to the right or left)
	Voltage
3	1 x 100-240 V, 50/60 Hz
	Valve type
1	Standard
2	Spring-loaded (HV version)
	Suction/discharge side connection
U2U2	Hose, 4/6 mm, 6/9 mm, 6/12 mm, 9/12 mm
U7U7	Hose 0.17" x 1/4"; 1/4" x 3/8"; 3/8" x 1/2"
AA	Threaded Rp 1/4", female (stainless steel)
VV	Threaded 1/4" NPT, female (stainless steel)
XX	No connection
	Installation set *
I001	Hose, 4/6 mm (up to 7.5 l/h, 13 bar)
I002	Hose, 9/12 mm (up to 60 l/h, 9 bar)
I003	Hose, 0.17" x 1/4" (up to 7.5 l/h, 13 bar)
I004	Hose, 3/8" x 1/2" (up to 60 l/h, 10 bar)
	Mains plug
F	EU
B	USA, Canada
G	UK
I	Australia, New Zealand, Taiwan
E	Switzerland
J	Japan
L	Argentina
	Design
G	Grundfos

* including: 2 pump connections, foot valve, injection unit, 6 m PE discharge hose, 2 m PVC suction hose, 2 m PVC deaeration hose (4/6 mm)

2.7 Product overview

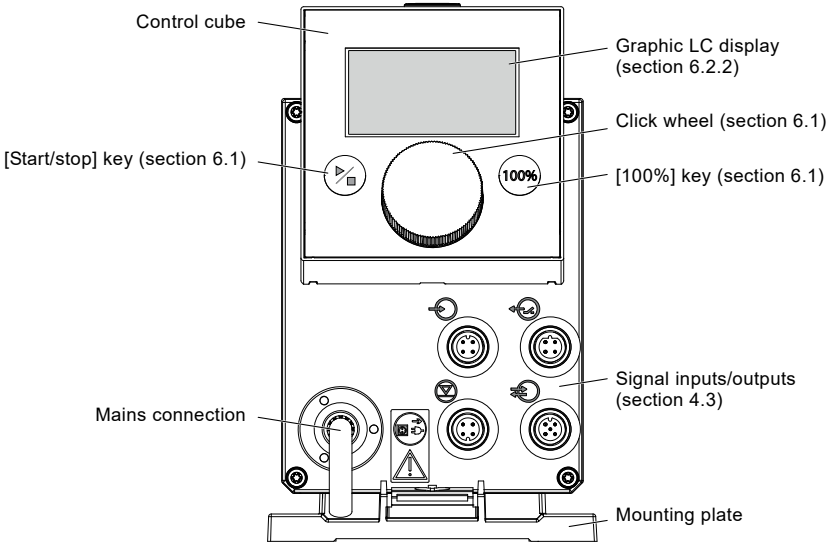

TM04 1129 0110

Fig. 2 Front view of the pump

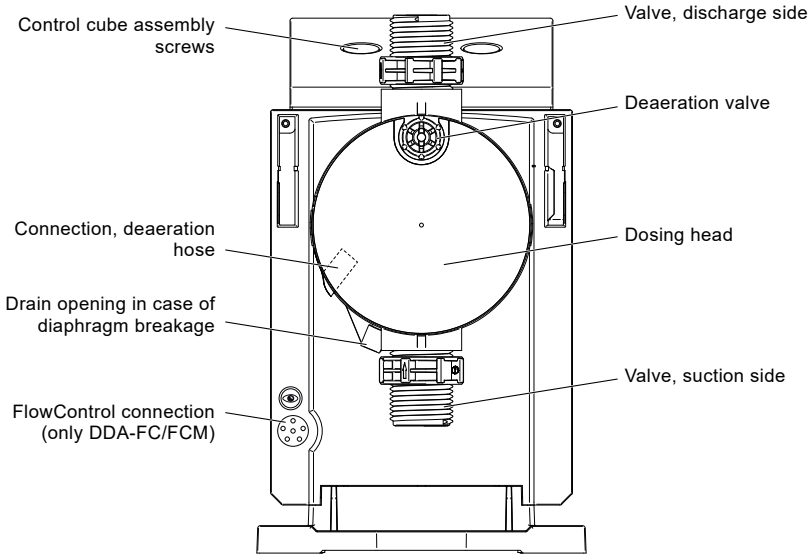

TM04 1133 0110

Fig. 3 Rear view of the pump

3. Technical data / Dimensions

3.1 Technical data

Data			7.5-16	12-10	17-7	30-4
Mechanical data	Turndown ratio (setting range)	[1:X]	3000	1000	1000	1000
	Max. dosing capacity	[l/h]	7.5	12.0	17.0	30.0
		[gph]	2.0	3.1	4.5	8.0
	Max. dosing capacity with SlowMode 50 %	[l/h]	3.75	6.00	8.50	15.00
		[gph]	1.00	1.55	2.25	4.00
	Max. dosing capacity with SlowMode 25 %	[l/h]	1.88	3.00	4.25	7.50
		[gph]	0.50	0.78	1.13	2.00
	Min. dosing capacity	[l/h]	0.0025	0.0120	0.0170	0.0300
		[gph]	0.0007	0.0031	0.0045	0.0080
	Max. operating pressure	[bar]	16	10	7	4
		[psi]	230	150	100	60
	Max. stroke frequency [1)]	[strokes/ min]	190	155	205	180
	Stroke volume	[ml]	0.74	1.45	1.55	3.10
	Accuracy of repeatability	[%]	± 1			
	Max. suction lift during operation [2)]	[m]	6			
	Max. suction lift when priming with wet valves [2)]	[m]	2	3	3	2
	Min. pressure difference between suction and discharge side	[bar]	1 (FC and FCM: 2)			
	Max. inlet pressure, suction side	[bar]	2			
	Max. viscosity in SlowMode 25 % with spring-loaded valves [3)]	[mPas] (= cP)	2500	2500	2000	1500
	Max. viscosity in SlowMode 50 % with spring-loaded valves [3)]	[mPas] (= cP)	1800	1300	1300	600
	Max. viscosity without SlowMode with spring-loaded valves [3)]	[mPas] (= cP)	600	500	500	200
	Max. viscosity without spring-loaded valves [3)]	[mPas] (= cP)	50	300	300	150
	Min. internal hose/pipe diameter suction/discharge side [2), 4)]	[mm]	4	6	6	9
	Min. internal hose/pipe diameter suction/discharge side (high viscosity) [4)]	[mm]	9			
	Min./Max. liquid temperature	[°C]	-10/45			
	Min./Max. ambient temperature	[°C]	0/45			
	Min./Max. storage temperature	[°C]	-20/70			
	Max. relative humidity (non-condensing)	[%]	96			
	Max. altitude above sea level	[m]	2000			

Data			7.5-16	12-10	17-7	30-4
Electrical data	Voltage	[V]	100-240 V, - 10 %/+ 10 %, 50/60 Hz			
	Length of mains cable	[m]	1.5			
	Max. inrush current for 2 ms (100 V)	[A]	8			
	Max. inrush current for 2 ms (230 V)	[A]	25			
	Max. power consumption P_1	[W]	24 [5]			
	Enclosure class		IP65, Nema 4X			
	Electrical safety class		II			
	Pollution degree		2			
Signal input	Max. load for level input		12 V, 5 mA			
	Max. load for pulse input		12 V, 5 mA			
	Max. load for External stop input		12 V, 5 mA			
	Min. pulse length	[ms]	5			
	Max. pulse frequency	[Hz]	100			
	Impedance at 0/4-20 mA analog input	[Ω]	15			
	Max. resistance in level/pulse circuit	[Ω]	1000			
Signal output	Max. ohmic load on relay output	[A]	0.5			
	Max. voltage on relay/analog output	[V]	30 VDC/30 VAC			
	Impedance at 0/4-20 mA analog output	[Ω]	500			
Weight/size	Weight (PVC, PP, PVDF)	[kg]	2.4	2.4		2.6
	Weight (stainless steel)	[kg]	3.2	3.2		4.0
	Diaphragm diameter	[mm]	44	50		74
Sound pressure	Max. sound pressure level	[dB(A)]	60			
Approvals			CE, CB, CSA-US, NSF61, GOST, C-Tick			

1) The maximum stroke frequency varies depending on calibration

2) Data is based on measurements with water

3) Maximum suction lift: 1 m, dosing capacity reduced (approx. 30 %)

4) Length of suction line: 1.5 m, length of discharge line: 10 m (at max. viscosity)

5) With E-Box

3.2 Dimensions

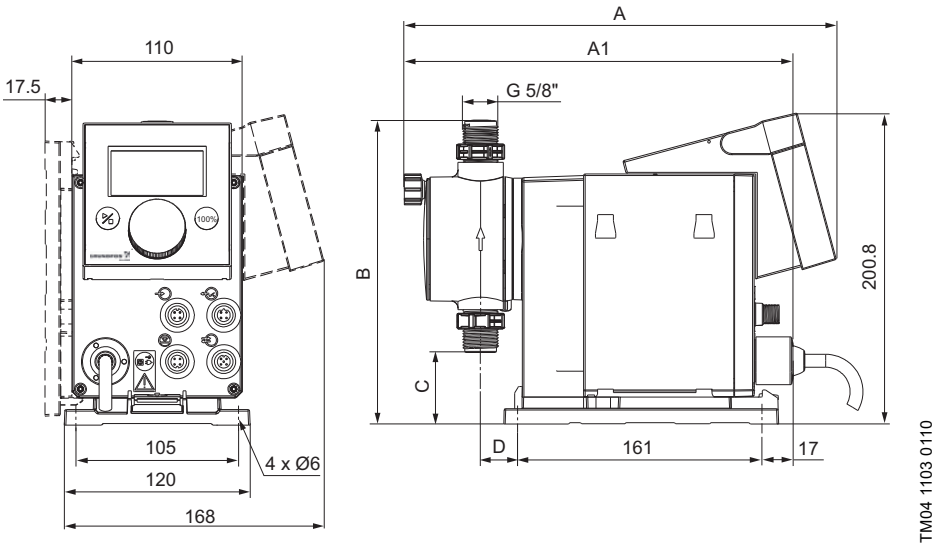

Fig. 4 Dimensional sketch

Pump type	A [mm]	A1 [mm]	B [mm]	C [mm]	D [mm]
DDA 7.5-16	280	251	196	46.5	24
DDA 12-10/17-7	280	251	200.5	39.5	24
DDA 30-4	295	267	204.5	35.5	38.5

4. Assembly and installation

Note

For use in Australia:

Installation of this product must comply with AS/NZS3500!

Certificate of suitability number: CS9431

C-tick number: N20683

4.1 Pump assembly

Warning

Install the pump in such a way that the plug can easily be reached by the operator during operation! This will enable the operator to separate the pump from the mains quickly in case of emergency!

The pump is delivered with a mounting plate. The mounting plate can be mounted vertically e.g. on a wall or horizontally e.g. on a tank. It takes just a few quick steps to firmly secure the pump to the mounting plate by means of a slot mechanism.

The pump can easily be released from the mounting plate for maintenance.

4.1.1 Requirements

- The mounting surface must be stable and must not vibrate.
- Dosing must flow upwards vertically.

4.1.2 Align and install mounting plate

- **Vertical installation**: Mounting plate slot mechanism must be above.
- **Horizontal installation**: Mounting plate slot mechanism must be opposite the dosing head.
- The mounting plate can be used as a drill template, please see fig. 4 for drill hole distances.

TM04 1162 0110

Fig. 5 Locate mounting plate

Warning

Make sure that you do not damage any cables and lines during installation!

1. Indicate drill holes.
2. Drill holes.
3. Secure mounting plate using four screws, diameter 5 mm, to the wall, on the bracket or the tank.

4.1.3 Engage pump in mounting plate

1. Attach the pump to the mounting plate support clamps and slide under slight pressure until it engages.

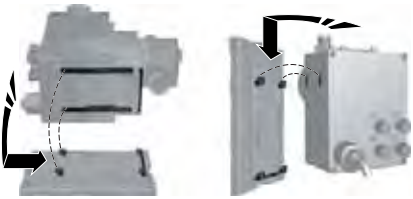

TM04 1159 0110

Fig. 6 Engaging the pump

4.1.4 Adjusting control cube position

The control cube is fitted to the front of the pump on delivery. It can be turned by 90 ° so that the user can select to operate the pump from the right or left side.

Caution

The enclosure class (IP65/Nema 4X) and shock protection are only guaranteed if the control cube is installed correctly!

Caution

Pump must be disconnected from the power supply!

1. Carefully remove both protective caps on the control cube using a thin screwdriver.
2. Loosen screws.
3. Carefully lift off control cube only so far from the pump housing that no tensile stress is produced on the flat band cable.
4. Turn control cube by 90 ° and re-attach.
   – Make sure the O-ring is secure.
5. Tighten screws slightly and attach protective caps.

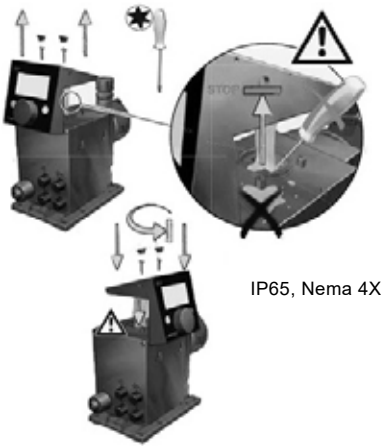

TM04 1182 0110

Fig. 7 Adjusting control cube

4.2 Hydraulic connection

Warning

Risk of chemical burns!

Wear protective clothing (gloves and goggles) when working on the dosing head, connections or lines!

The dosing head may contain water from the factory check!

Caution ***When dosing media which should not come into contact with water, another medium must be dosed beforehand!***

Caution ***Faultless function can only be guaranteed in conjunction with lines supplied by Grundfos!***

Caution ***The lines used must comply with the pressure limits as per section 3.1 Technical data!***

Important information on installation

- Observe suction lift and line diameter, see section *3.1 Technical data*.
- Shorten hoses at right angles.
- Ensure that there are no loops or kinks in the hoses.
- Keep suction line as short as possible.
- Route suction line up towards the suction valve.
- Installing a filter in the suction line protects the entire installation against dirt and reduces the risk of leakage.
- Only control variant FC/FCM: For discharge quantities < 1 l/h we recommend the use of an additional spring-loaded valve (approx. 3 bar) on the discharge side for the safe generation of the necessary differential pressure.

Hose connection procedure

1. Push union nut and tensioning ring across hose.
2. Push cone part fully into hose, see fig. 8.
3. Attach cone part with hose to corresponding pump valve.
4. Tighten union nut manually.
   – Do not use tools!
5. Tighten up union nuts after 2-5 operating hours if using PTFE gaskets!
6. Attach deaeration hose to the corresponding connection (see fig. 3) and run into a container or a collecting tray.

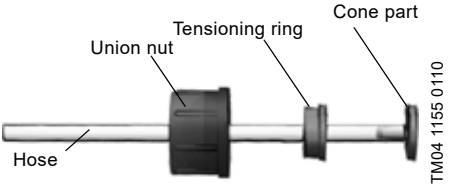

Fig. 8 Hydraulic connection

Note ***Pressure differential between suction and discharge side must be at least 1 bar/14.5 psi!***

Caution ***Tighten up the dosing head screws once before commissioning and after 2-5 operating hours at 3 Nm.***

Installation example

The pump offers various installation options. In the picture below, the pump is installed in conjunction with a suction line, level switch and multifunction valve on a Grundfos tank.

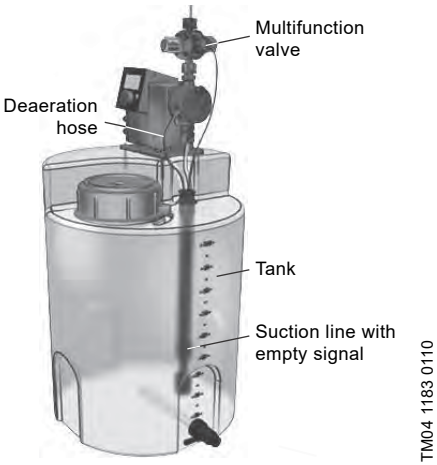

Fig. 9 Installation example

4.3 Electrical connection

Warning
The enclosure class (IP65/Nema 4X) is only guaranteed if plugs or protective caps are correctly installed!

Warning
The pump can start automatically when the mains voltage is switched on!
Do not manipulate mains plug or cable!

Note

The mains plug is the separator separating the pump from the mains.
The rated voltage of the pump, see section 2.5 Nameplate, must conform to local conditions.

Signal connections

Warning
Electric circuits of external devices connected to the pump inputs must be separated from dangerous voltage by means of double or reinforced insulation!

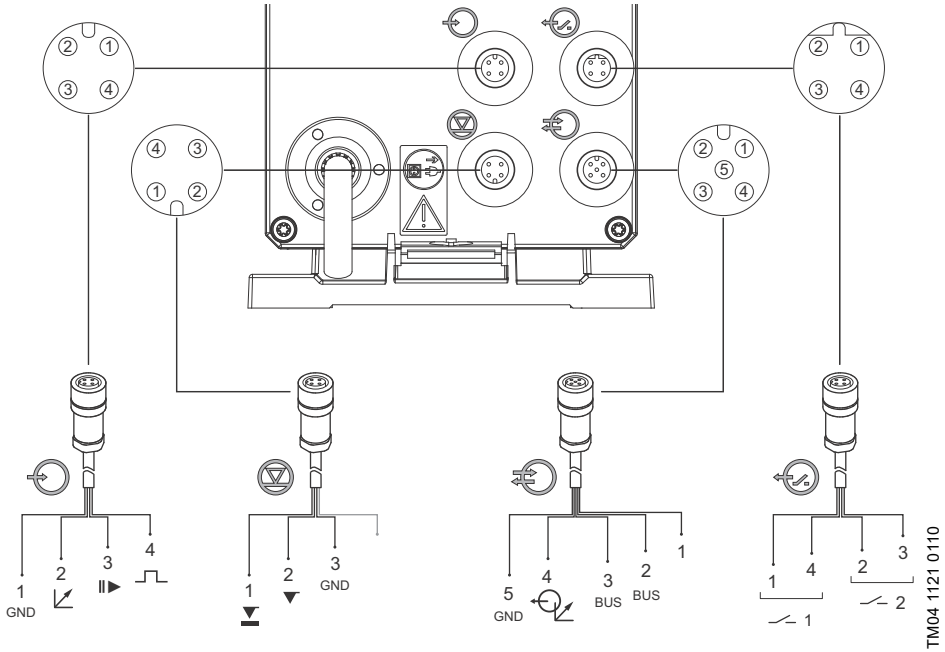

Fig. 10 Wiring diagram of the electrical connections

Analog, External stop and pulse input

Function	Pins				Plug type
	1/brown	2/white	3/blue	4/black	
Analog	GND/(-) mA	(+) mA			mA signal
External stop	GND		X		Pulse
Pulse	GND			X	Pulse

Level signals: Empty signal and Low-level signal

Function	Pins				Plug type
	1	2	3	4	
Low-level signal	X		GND		Pulse
Empty signal		X	GND		Pulse

GENIbus, Analog output

Caution ***Danger of damage to the product due to short circuit! Pin 1 supplies 30 VDC. Never short-circuit pin 1 with any of the other pins!***

Function	Pins					Plug type
	1/brown	2/white	3/blue	4/black	5/yellow/ green	
GENIbus	+30 V	GENI bus TXD	GENI bus RXD		GND	Bus
Analog output				(+) mA	GND/(-) mA	mA signal

Relay outputs

Function	Pins				Plug type
	1/brown	2/white	3/blue	4/black	
Relay 1	X			X	Pulse
Relay 2		X	X		Pulse

FlowControl signal connection

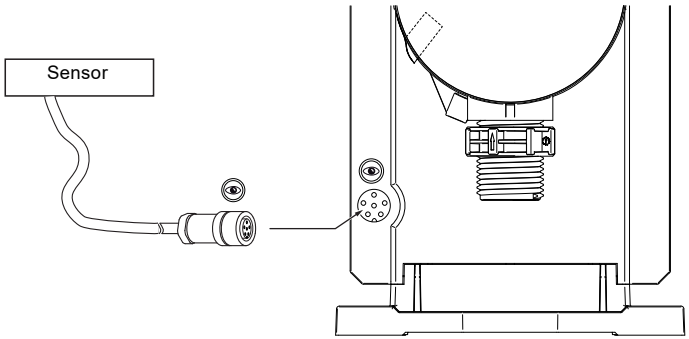

TM04 1158 0110

Fig. 11 FlowControl signal connection

5. Start-up

5.1 Setting the menu language

For description of control elements, see section 6.

1. Turn click wheel to highlight the cog symbol.

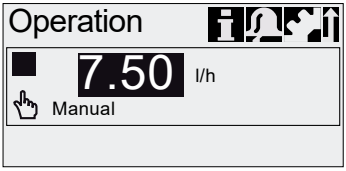

2. Press the click wheel to open the "Setup" menu.

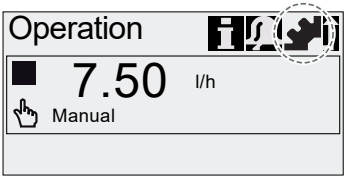

3. Turn the click wheel to highlight the "Language" menu.

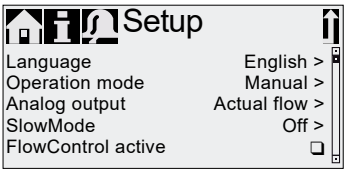

4. Press the click wheel to open the "Language" menu.

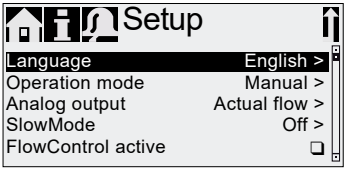

5. Turn the click wheel to highlight the desired language.

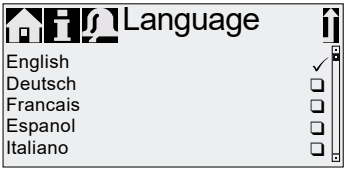

6. Press the click wheel to select the highlighted language.

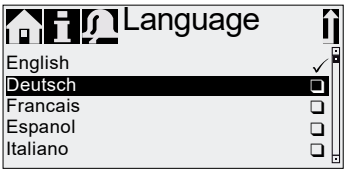

7. Press the click wheel again to confirm the "Confirm settings?" prompt and apply the setting.

TM04 1184 1110

Fig. 12 Set menu language

5.2 Deaerating the pump

Warning

The deaeration hose must be connected correctly and inserted into a suitable tank!

1. Open deaeration valve by approximately half a turn.
2. Press and hold down the [100%] key (deaeration key) until liquid flows continuously without any bubbles from the deaeration hose.
3. Close deaeration valve.

Note

Press the [100%] key and simultaneously turn the click wheel clockwise to increase the duration of the process to up to 300 seconds. After setting the seconds, do not press the key any longer.

5.3 Calibrating the pump

The pump is calibrated in the factory for media with a viscosity similar to water at maximum pump backpressure (see section *3.1 Technical data*).

If the pump is operated with a backpressure that deviates or if dosing a medium whose viscosity deviates, the pump must be calibrated.

For pumps with FCM control variant, it is not necessary to calibrate the pump if there is deviating or fluctuating backpressure as long as the "AutoFlowAdapt" function has been enabled (see section *6.10 AutoFlowAdapt*).

Requirements

- The hydraulics and electrics of the pump are connected (see section *4. Assembly and installation*).
- The pump is integrated into the dosing process under operating conditions.
- The dosing head and suction hose are filled with dosing medium.
- The pump has been deaerated.

Calibration process - example for DDA 7.5-16

1. Fill a measuring beaker with dosing medium. Recommended filling volumes V_1:
   – DDA 7.5-16: 0.3 l
   – DDA 12-10: 0.5 l
   – DDA 17-7: 1.0 l
   – DDA 30-4: 1.5 l

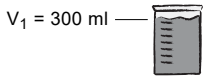

2. Read off and note down the fill volume V_1 (e.g. 300 ml).
3. Place the suction hose in the measuring beaker.

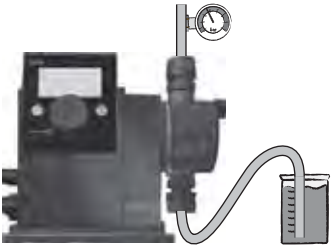

4. Start the calibration process in the "Setup > Calibration" menu.

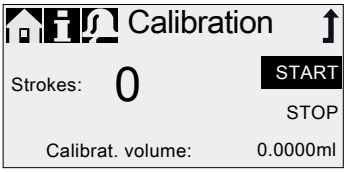

5. The pump executes 200 dosing strokes and displays the factory calibration value (e.g. 125 ml).

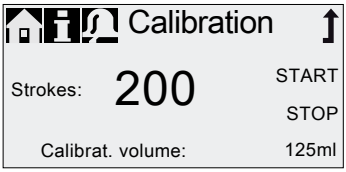

6. Remove the suction hose from the measuring beaker and check the remaining volume V_2 (e.g. 170 ml).

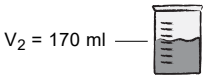

7. From V_1 and V_2, calculate the actual dosed volume $V_d = V_1 - V_2$ (e.g. 300 ml - 170 ml = 130 ml).

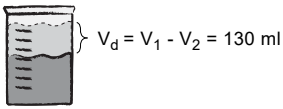

8. Set and apply V_d in the calibration menu.
- The pump is calibrated.

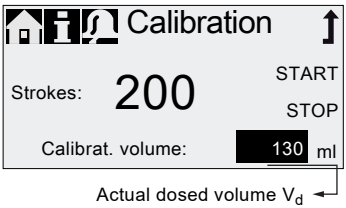

TM04 1154 1110

6. Operation

6.1 Control elements

The pump control panel includes a display and the following control elements.

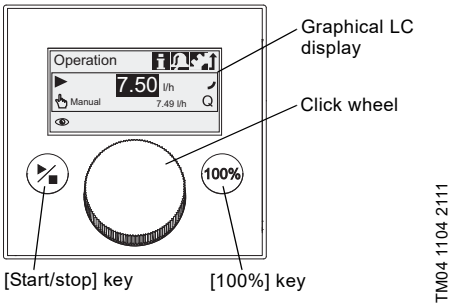

Fig. 13 Control panel

Keys

Key	Function
[Start/stop] key	Starting and stopping the pump.
[100%] key	The pump doses at maximum flow regardless of the operation mode.

Click wheel

The click wheel is used to navigate through the menus, select settings and confirm them.

Turning the click wheel clockwise moves the cursor clockwise in increments in the display. Turning the click wheel counter-clockwise moves the cursor counter-clockwise.

6.2 Display and symbols

6.2.1 Navigation

In the "Info", "Alarm" and "Setup" main menus, the options and submenus are displayed in the rows below. Use the "Back" symbol to return to the higher menu level. The scroll bar at the right edge of the display indicates that there are further menu items which are not shown.

The active symbol (current cursor position) flashes. Press the click wheel to confirm your selection and open the next menu level. The active main menu is displayed as text, the other main menus are displayed as symbols. The position of the cursor is highlighted in black in the sub-menus.

When you position the cursor on a value and press the click wheel, a value is selected. Turning the click wheel clockwise increases the value, turning the click wheel counter-clockwise reduces the value. When you now press the click wheel, the cursor will be released again.

6.2.2 Operating states

The operating state of the pump is indicated by a symbol and display colour.

Display	Fault	Operating state		
White	-	Stop ■	Standby ❚❚	
Green	-			Running ▶
Yellow	Warning	Stop ■	Standby ❚❚	Running ▶
Red	Alarm	Stop ■	Standby ❚❚	

6.2.3 Sleep mode (energy-saving mode)

If in the "Operation" main menu the pump is not operated for 30 seconds, the header disappears. After two minutes, the display brightness is reduced.

If in any other menu the pump is not operated for two minutes, the display switches back to the "Operation" main menu and the display brightness is reduced. This state will be cancelled when the pump is operated or a fault occurs.

6.2.4 Overview of display symbols

The following display symbols may appear in the menus.

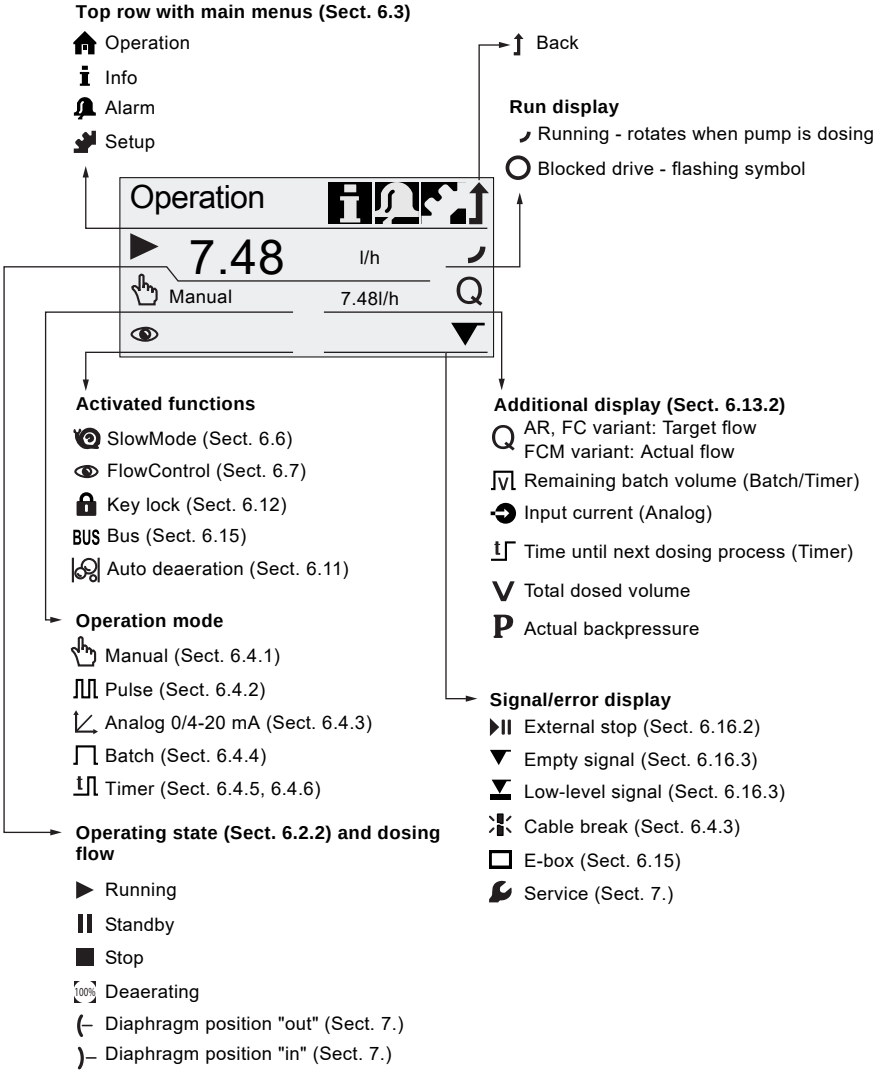

Fig. 14 Overview of display symbols

TM04 1161 1710

6.3 Main menus

The main menus are displayed as symbols at the top of the display. The currently active main menu is displayed as text.

6.3.1 Operation

Status information such as the dosing flow, selected operation mode and operating state is displayed in the "Operation" main menu.

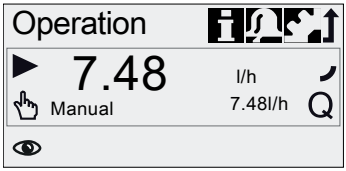

TM04 1157 2011

6.3.2 Info

You can find the date, time and information about the active dosing process, various counters, product data and the service system status in the "Info" main menu. The information can be accessed during operation.

The service system can also be reset from here.

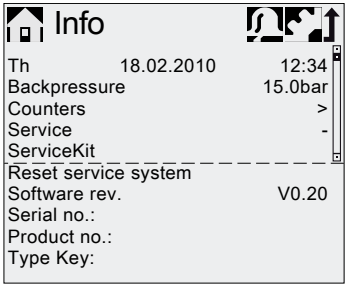

TM04 1106 1010

Counters

The "Info > Counters" menu contains the following counters:

Counters	Resettable
Volume Total dosed volume [l] or US gallons	Yes
Operating hours Accumulated operating hours (pump switched on) [h]	No
Motor runtime Accumulated motor runtime [h]	No
Strokes Accumulated number of dosing strokes	No
Power on/off Accumulated frequency of switching mains voltage on	No

6.3.3 Alarm

You can view errors in the "Alarm" main menu.

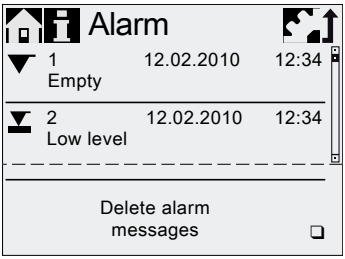

TM04 1109 1010

Up to 10 warnings and alarms, together with their date, time and cause, are listed in chronological order. If the list is full, the oldest entry will be overwritten, see section *8. Faults*.

6.3.4 Setup

The "Setup" main menu contains menus for pump configuration. These menus are described in the following sections.

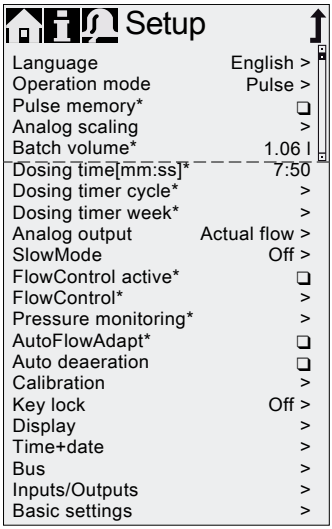

TM04 1110 1010

* These submenus are only displayed for specific default settings and control variants.
The contents of the "Setup" menu also vary depending on the operation mode.

6.4 Operation modes

Six different operation modes can be set in the "Setup > Operation mode" menu.

- Manual, see section 6.4.1
- Pulse, see section 6.4.2
- Analog 0-20mA, see section 6.4.3
  Analog 4-20mA, see section 6.4.3
- Batch (pulse-based), see section 6.4.4
- Dosing timer cycle, see section 6.4.5
- Dosing timer week, see section 6.4.6

6.4.1 Manual

In this operation mode, the pump constantly doses the dosing flow set with the click wheel. The dosing flow is set in l/h or ml/h in the "Operation" menu. The pump automatically switches between the units. Alternatively, the display can be reset to US units (gph). See section *6.13 Display Setup*.

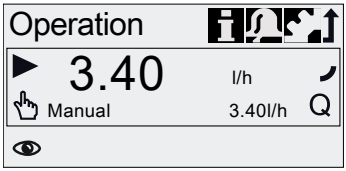

TM04 1125 1110

Fig. 15 Manual mode

The setting range depends on the pump type:

Type	Setting range *	
	[l/h]	[gph]
DDA 7.5-16	0.0025 - 7.5	0.0007 - 2.0
DDA 12-10	0.012 - 12	0.0031 - 3.1
DDA 17-7	0.017 - 17	0.0045 - 4.5
DDA 30-4	0.03 - 30	0.0080 - 8.0

* When the "SlowMode" function is active, the maximum dosing flow is reduced, see section *3.1 Technical data*.

6.4.2 Pulse

In this operation mode, the pump doses the set dosing volume for each incoming (potential-free) pulse, e.g. from a water meter. The pump automatically calculates the optimum stroke frequency for dosing the set volume per pulse.

The calculation is based on:

- the frequency of external pulses
- the set dosing volume/pulse.

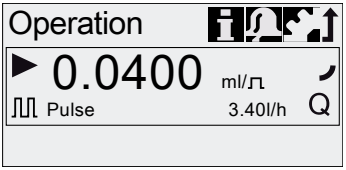

TM04 1126 1110

Fig. 16 Pulse mode

The dosing volume per pulse is set in ml/pulse in the "Operation" menu using the click wheel. The setting range for the dosing volume depends on the pump type:

Type	Setting range [ml/pulse]
DDA 7.5-16	0.0013 - 12.8
DDA 12-10	0.0026 - 25.8
DDA 17-7	0.0027 - 26.8
DDA 30-4	0.0058 - 58.4

The frequency of incoming pulses is multiplied by the set dosing volume. If the pump receives more pulses than it can process at the maximum dosing flow, it runs at the maximum stroke frequency in continuous operation. Excess pulses will be ignored if the memory function is not enabled.

Memory function

When the "Setup > Pulse memory" function is enabled, up to 65,000 unprocessed pulses can be saved for subsequent processing.

Warning

Subsequent processing of saved pulses can cause local increase in concentration!

The contents of the memory will be deleted by:

- Switching off the power supply
- Changing the operation mode
- Interruption (e.g. alarm, External stop).

6.4.3 Analog 0/4-20 mA

In this operation mode, the pump doses according to the external analog signal.
The dosing volume is proportional to the signal input value in mA.

Operation mode	Input value [mA]	Dosing flow [%]
4-20 mA	≤ 4.1	0
	≥ 19.8	100
0-20 mA	≤ 0.1	0
	≥ 19.8	100

If the input value in operation mode 4-20 mA falls below 2 mA, an alarm is displayed and the pump stops. A cable break or signal transmitter error has occurred. The "Cable break" symbol is displayed in the "Signal and error display" area of the display.

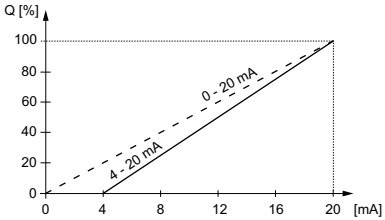

TM04 1120 2010

Fig. 17 Analog scaling

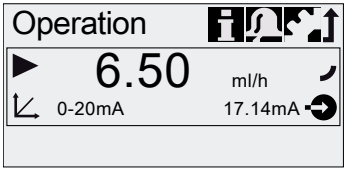

TM04 1127 1110

Fig. 18 Analog operation mode

Set analog scaling

Analog scaling refers to the assignment of the current input value to the dosing flow.

Changes of analog scaling affect also the analog output signal. See section *6.5 Analog output*.

Analog scaling passes through the two reference points (I_1/Q_1) and (I_2/Q_2), which are set in the "Setup > Analog scaling" menu. The dosing flow is controlled according to this setting.

Example 1 (DDA 7.5-16)

Analog scaling with positive gradient:

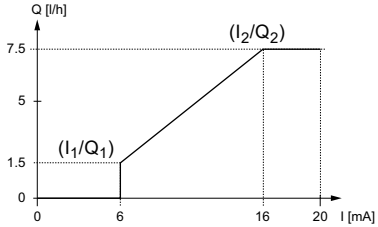

TM04 1160 2010

Fig. 19 Analog scaling with pos. gradient

In example 1, the reference points I_1 = 6 mA, Q_1 = 1.5 l/h and I_2 = 16 mA, Q_2 = 7.5 l/h have been set.

From 0 to 6 mA analog scaling is described by a line that passes through Q = 0 l/h, between 6 mA and 16 mA it rises proportionally from 1.5 l/h to 7.5 l/h and from 16 mA onwards it passes through Q = 7.5 l/h.

Example 2 (DDA 7.5-16)

Analog scaling with negative gradient (Operation mode 0-20 mA):

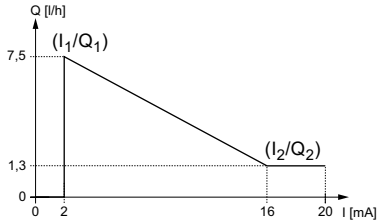

TM04 1101 2010

Fig. 20 Analog scaling with neg. gradient

In example 2, the reference points I_1 = 2 mA, Q_1 = 7.5 l/h and I_2 = 16 mA, Q_2 = 1.3 l/h have been set.

From 0 to 2 mA analog scaling is described by a line that passes through Q = 0 l/h, between 2 mA and 16 mA it drops proportionally from 7.5 l/h to 1.3 l/h and from 16 mA onwards it passes through Q_2 = 1.3 l/h.

Set analog scaling in the "Operation" menu

Analog scaling can also be modified after a security prompt directly in the "Operation" menu. This is how the dosing flow is directly modified for the current flow input value.

Caution

Please observe that changes also have a direct effect on point I_2/Q_2 (see fig. 21)!

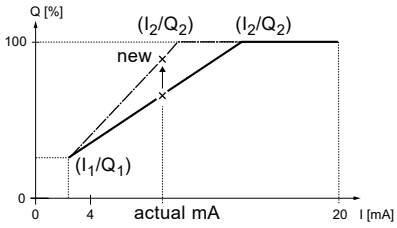

Fig. 21 Set analog scaling ("Operation" menu)

6.4.4 Batch (pulse-based)

In this operation mode, the pump doses the set batch volume in the set dosing time (t_1). A batch is dosed with each incoming pulse.

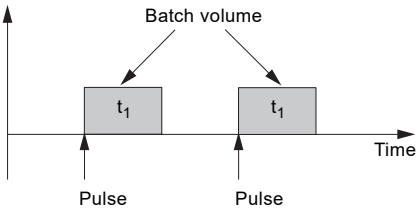

Fig. 22 Batch (pulse-based)

The setting range depends on the pump type:

Type	Setting range per batch		
	from [ml]	to [l]	Resolution * [ml]
DDA 7.5-16	0.74	999	0.0925
DDA 12-10	1.45	999	0.1813
DDA 17-7	1.55	999	0.1938
DDA 30-4	3.10	999	0.3875

* Thanks to the digital motor control, dosing quantities with a resolution of up to 1/8 of the dosing stroke volume can be dosed.

The batch volume (e.g. 75 ml) is set in the "Setup > Batch volume" menu. The minimum dosing time required for this (e.g. 36 seconds) is displayed and can be increased.

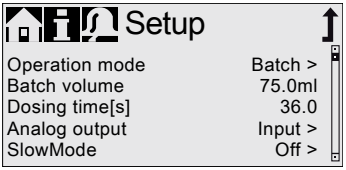

Fig. 23 Batch mode

Signals received during a batch process or an interruption (e.g. alarm, External stop) will be ignored. If the pump is restarted following an interruption, the next batch volume is dosed on the next incoming pulse.

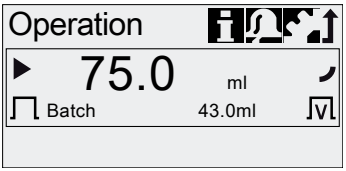

Fig. 24 Batch mode

In the "Operation" menu, the total batch volume (e.g. 75 ml) and the remaining batch volume still to be dosed (e.g. 43 ml) are shown in the display.

6.4.5 Dosing timer cycle

In this operation mode, the pump doses the set batch volume in regular cycles.
Dosing starts when the pump is started after a singular start delay. The setting range for the batch volume corresponds to the values in section *6.4.4 Batch (pulse-based)*.

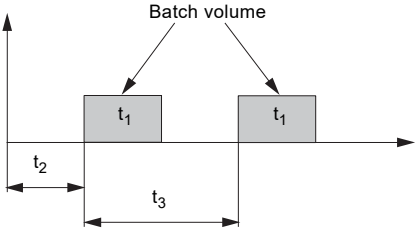

TM04 1107 1109

Fig. 25 Dosing timer cycle diagram

t_1	Dosing time
t_2	Start delay
t_3	Cycle time

In the event of an interruption (e.g. interruption of the mains voltage, External stop), the dosing will be stopped while the time continues running.
After suspending the interruption, the pump will continue to dose according to the actual timeline position.

The following settings are required in the "Setup > Dosing timer cycle" menu:

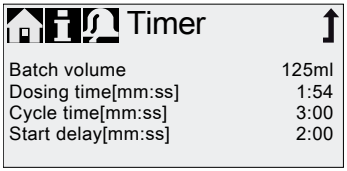

TM04 1137 1110

Fig. 26 Dosing timer cycle

The batch volume to be dosed (e.g. 125 ml) is set in the "Setup > Dosing timer cycle" menu. The dosing time required for this (e.g. 1:54) is displayed and can be changed.

The total batch volume (e.g. 125 ml) and the remaining batch volume still to be dosed are displayed in the "Operation" menu. During breaks in dosing, the time until the next dosing process (e.g. 1:21) is displayed.

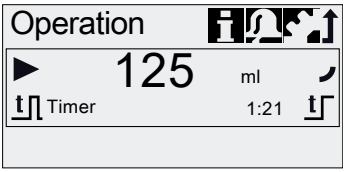

TM04 1136 2011

Fig. 27 Dosing timer cycle

6.4.6 Dosing timer week

In this operation mode, up to 16 dosing procedures are defined for a week.
These dosing procedures may take place regularly on one or several week days. The setting range for the batch volume corresponds to the values in section *6.4.4 Batch (pulse-based)*.

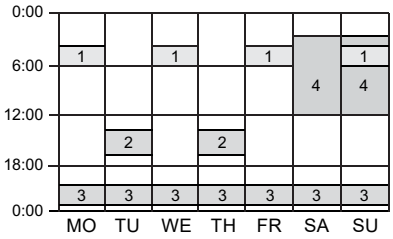

TM04 1108 1109

Fig. 28 Example for Dosing timer week function

Note

If several procedures overlap, the process with the higher dosing flow has priority!

In the event of an interruption (e.g. disconnection of the mains voltage, External stop), the dosing is stopped while the time continues running.
After suspending the interruption, the pump continues to dose according to the actual timeline position.

The following settings are required in the "Setup > Dosing timer week" menu for each dosing procedure:

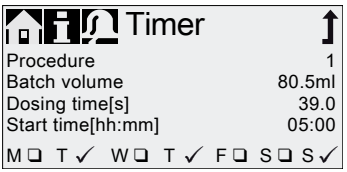

TM04 1138 1110

Fig. 29 Setting the timer

The batch volume (e.g. 80.5 ml) is set in the "Setup > Dosing timer week" menu. The dosing time required for this (e.g. 39.0) is displayed and can be changed.

In the "Operation" menu, the total batch volume (e.g. 80.5 ml) and the remaining batch volume to be dosed is displayed. During breaks in dosing, the time (e.g. 43:32) until the next dosing is displayed.

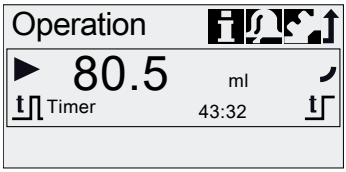

TM04 1136 1110

Fig. 30 Weekly timer dosing (break in dosing)

6.5 Analog output

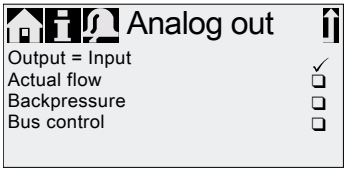

TM04 1153 1110

Fig. 31 Configure analog output

The analog output of the pump is parametrised in the "Setup > Analog output" menu.
The following settings are possible:

Setting	Description of output signal	Variant FCM	Variant FC	Variant AR
Output = Input	The analog input signal is mapped 1:1 to the analog output (e.g. to control several pumps using one signal)	X	X	X
Actual flow **	Current actual flow • 0/4 mA = 0 % • 20 mA = 100 % see section *6.9 Flow measurement*	X	X *	X *
Backpressure	Backpressure, measured in the dosing head • 0/4 mA = 0 bar • 20 mA = Max. operating pressure see section *6.8 Pressure monitoring*	X	X	
Bus control	Enabled by command in Bus control, see section *6.15 Bus communication*	X	X	X

* Output signal is based on motor speed and pump status (target flow).

** Signal has same analog scaling as the current analog input signal. See *6.4.3 Analog 0/4-20 mA*.

Wiring diagram see section *4.3 Electrical connection*.

Note

In all operation modes, the analog output has a range of 4-20 mA. Exception: Operation mode 0-20 mA. Here, the analog output range is 0-20 mA.

6.6 SlowMode

When the "SlowMode" function is enabled, the pump slows down the suction stroke. The function is enabled in the "Setup > SlowMode" menu and is used to prevent cavitation in the following cases:

- for dosing media with a high viscosity
- for degassing dosing media
- for long suction lines
- for large suction lift.

In the "Setup > SlowMode" menu, the speed of the suction stroke can be reduced to 50 % or 25 %.

Caution

Enabling the 'SlowMode' function reduces the maximum dosing flow of the pump to the set percentage value!

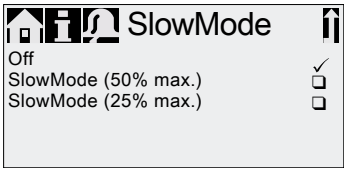

TM04 1153 1110

Fig. 32 SlowMode menu

6.7 FlowControl

Applies to DDA-FC/FCM control variant.

This function is used to monitor the dosing process. Although the pump is running, various influences e.g. air bubbles, can cause a reduced flow or even stop the dosing process. In order to guarantee optimum process safety, the enabled "FlowControl" function directly detects and indicates the following errors and deviations:

- Overpressure
- Damaged discharge line
- Air in the dosing chamber
- Cavitation
- Suction valve leakage > 70 %
- Discharge valve leakage > 70 %.

The occurrence of a fault is indicated by the 'eye' symbol flashing. The faults are displayed in the "Alarm" menu (see section *8. Faults*).

FlowControl works with a maintenance-free sensor in the dosing head. During the dosing process, the sensor measures the current pressure and continuously sends the measured value to the microprocessor in the pump. An internal indicator diagram is created from the current measured values and the current diaphragm position (stroke length). Causes for deviations can be identified immediately by aligning the current indicator diagram with a calculated optimum indicator diagram. Air bubbles in the dosing head reduce e.g. the discharge phase and consequently the stroke volume (see fig. 33).

Requirements for a correct indicator diagram are:

- FlowControl function is active
- pressure difference between suction and discharge side is > 2 bar
- No interruption/pause in discharge stroke
- Pressure sensor and cable are functioning properly
- No leakage > 50 % in suction or discharge valve

If one of these requirements is not met, the indicator diagram cannot be evaluated.

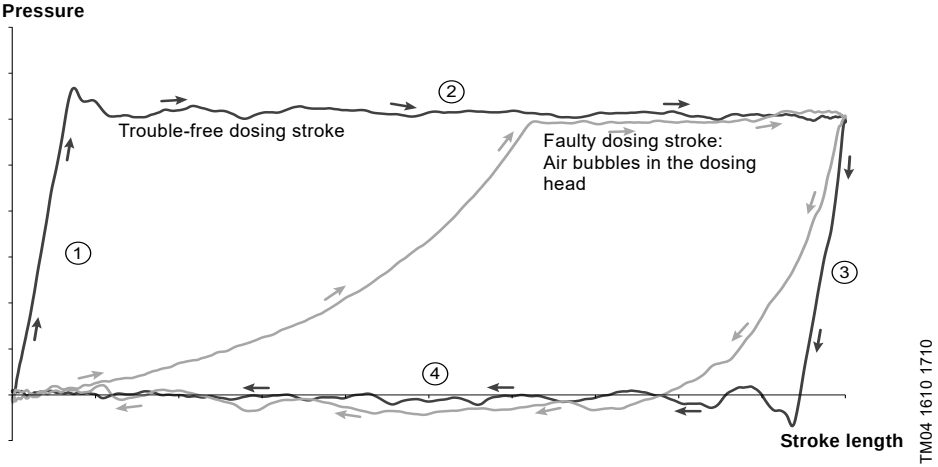

Fig. 33 Indicator diagram

1	Compression phase
2	Discharge phase
3	Expansion phase
4	Suction phase

Setting FlowControl

The "FlowControl" function is set using the two parameters "Sensitivity" and "Delay" in the "Setup > FlowControl" menu.

Sensitivity

In "Sensitivity" the deviation in stroke volume, which will result in an error message, is set in percent.

Sensitivity	Deviation
low	approx. 70 %
medium	approx. 50 %
high	approx. 30 %

Delay

The "Delay" parameter is used to define the time period until an error message is generated: "short", "medium" or "long". The delay depends on the set dosing flow and therefore cannot be measured in strokes or time.

Air bubbles

The "FlowControl" function identifies air bubbles > 60 % of the stroke volume. After switching to "Air bubble" warning status, the pump adapts the stroke frequency to approximately 30-40 % of max. stroke frequency, and starts a special motor drive strategy. The adaptation of the stroke frequency allows the air bubbles to rise from suction to discharge valve. Due to the special motor drive strategy the air bubbles are displaced from the dosing head into the discharge line.

If the air bubbles have not been eliminated after a maximum of 60 strokes, the pump returns to the normal motor drive strategy.

6.8 Pressure monitoring

Applies to DDA-FC/FCM control variant.

A pressure sensor monitors the pressure in the dosing head. If the pressure during the discharge phase falls below 2 bar, a warning is generated (pump continues running). If in the "Setup > Pressure monitoring" menu the function "Min. pressure alarm" is activated, an alarm is generated and the pump is stopped.

If the pressure exceeds the "Max. pressure" set in the "Setup > Pressure monitoring" menu, the pump is shut down, enters the standby state and indicates an alarm.

Caution

The pump restarts automatically once the backpressure falls below the set "Max. pressure"!

6.8.1 Pressure setting ranges

Type	Fixed min. pressure [bar]	Adjustable max. pressure [bar]
DDA 7.5-16	< 2	3-17
DDA 12-10	< 2	3-11
DDA 17-7	< 2	3-8
DDA 30-4	< 2	3-5

Warning

Install a pressure-relief valve in the pressure line to provide protection against impermissibly high pressure!

Caution

The pressure measured in the dosing head is slightly higher than the actual system pressure.

Therefore the "Max. pressure " should be set at least 0.5 bar higher than the system pressure.

6.8.2 Calibration of pressure sensor

The pressure sensor is calibrated in the factory. As a rule, it does not need to be re-calibrated. If specific circumstances (e.g. pressure sensor exchange, extreme air pressure values at the location of the pump) necessitate a calibration, the sensor can be calibrated as follows:

1. Set pump to "Stop" operating state.
2. Make system pressureless and flush.
3. Dismantle suction line and suction valve.

Warning

Calibrating when the suction valve is installed produces incorrect calibration and can cause personal injuries and damage to property!

Only carry out a calibration if this is technically required!

4. Proceed as described below to calibrate:

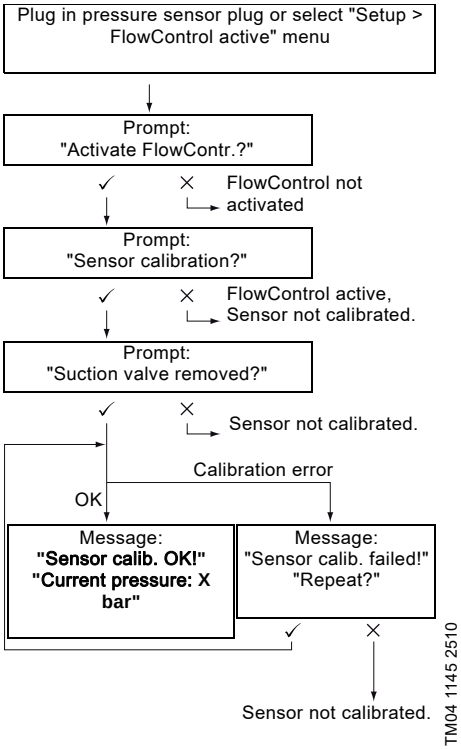

If a calibration is not successfully possible, check plug connections, cable and sensor and replace defective parts where necessary.

6.9 Flow measurement

Applies to DDA-FCM control variant.

The pump accurately measures the actual flow and displays it. Via the 0/4-20 mA analog output, the actual flow signal can easily be integrated into an external process control without additional measuring equipment (see section *6.5 Analog output*).

The flow measurement is based on the indicator diagram as described in section *6.7 FlowControl*. The accumulated length of the discharge phase multiplied by the stroke frequency produces the displayed actual flow. Faults e.g. air bubbles or backpressure that is too low result in a smaller or larger actual flow. When the "AutoFlowAdapt" function is activated (see section *6.10 AutoFlowAdapt*), the pump compensates for these influences by correction of the stroke frequency.

Note ***Strokes which cannot be analysed (partial strokes, pressure differential which is too low) are provisionally calculated based on the setpoint value and displayed.***

6.10 AutoFlowAdapt

Applies to DDA-FCM control variant.

The "AutoFlowAdapt" function is activated in the "Setup" menu. It detects changes in various parameters and responds accordingly in order to keep the set target flow constant.

Note ***Dosing accuracy is increased when "AutoFlowAdapt" is activated.***

This function processes information from the pressure sensor in the dosing head. Errors detected by the sensor are processed by the software.
The pump responds immediately regardless of the operation mode by adjusting the stroke frequency or where necessary compensating for the deviations with a corresponding indicator diagram.

If the target flow cannot be achieved by the adjustments, a warning is issued.

"AutoFlowAdapt" operates on the basis of the following functions:

- FlowControl: malfunctions are identified (see section *6.7 FlowControl*).
- Pressure monitoring: pressure fluctuations are identified (see section *6.8 Pressure monitoring*).
- Flow measurement: deviations from the target flow are identified (see section *6.9 Flow measurement*).

Example of "AutoFlowAdapt"

Pressure fluctuations

The dosing volume decreases as backpressure increases and conversely the dosing volume increases as the backpressure decreases.

The "AutoFlowAdapt" function identifies pressure fluctuations and responds by adjusting the stroke frequency. The actual flow is thus maintained at a constant level.

6.11 Auto deaeration

Dosing degassing media can result in air pockets in the dosing head during breaks in dosing. This can result in no medium being dosed when restarting the pump. The "Setup > Auto deaeration" function performs pump deaeration automatically at regular intervals.
Software-controlled diaphragm movements encourage any bubbles to rise and gather at the discharge valve so that they can be removed on the next dosing stroke.

The function works:

- when the pump is not in the "Stop" operating state
- during breaks in dosing (e.g. External stop, no incoming pulses, etc.).

Note ***The diaphragm movements can displace small volumes into the discharge line. When dosing strongly degassing media, this is however virtually impossible.***

6.12 Key lock

The key lock is set in the "Setup > Key lock" menu by entering a four-digit code. It protects the pump by preventing changes to settings. Two levels of key lock can be selected:

Level	Description
Settings	All settings can only be changed by entering the lock code. The [Start/stop] key and the [100%] key are not locked.
Settings + keys	The [Start/stop] key and the [100%] key and all settings are locked.

It is still possible to navigate in the "Alarm" and "Info" main menu and reset alarms.

6.12.1 Temporary deactivation

If the "Key lock" function is activated but settings need to be modified, the keys can be unlocked temporarily by entering the deactivation code. If the code is not entered within 10 seconds, the display automatically switches to the "Operation" main menu. The key lock remains active.

6.12.2 Deactivation

The key lock can be deactivated in the "Setup > Key lock" menu via the "Off" menu point. The key lock is deactivated after the general code "2583" or a pre-defined custom code has been entered.

6.13 Display Setup

Use the following settings in the "Setup > Display" menu to adjust the display properties:

- Units (metric/US)
- Display contrast
- Additional display.

6.13.1 Units

Metric units (litres/millilitres/bar) or US units (US gallons/PSI) can be selected. According to the operation mode and menu, the following units of measurement are displayed:

Operation mode/ function	Metric units	US units
Manual control	ml/h or l/h	gph
Pulse control	ml/⊓	ml/⊓
0/4-20 mA Analog control	ml/h or l/h	gph
Batch (pulse- or timer-controlled)	ml or l	gal
Calibration	ml	ml
Volume counter	l	gal
Pressure monitoring	bar	psi

6.13.2 Additional display

The additional display provides additional information about the current pump status. The value is shown in the display with the corresponding symbol.

In "Manual" mode the "Actual flow" information can be displayed with Q = 1.28 l/h (see fig. 34).

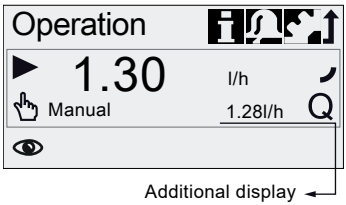

TM04 1151 2011

Fig. 34 Display with additional display

The additional display can be set as follows:

Setting	Description	
Default display	Depending on the operation mode:	
	Q	Actual flow (Manual/Pulse) [1), 2)]
	Q	Target flow (Pulse)
		Input current (analog)
	∫vl	Remaining batch volume (Batch, Timer)
	t∫	Period until next dosing (Timer)
Dosed volume	V	Dosed vol. since last reset (see *Counters* on page 24)
Actual flow	Q	Current actual flow [1)]
Backpressure	P	Current backpressure in the dosing head [3)]

1) only DDA-FCM control variant

2) only if indicator diagram can be evaluated (see *6.7 FlowControl*)

3) only DDA-FCM/FC control variant

6.14 Time+date

The time and date can be set in the "Setup > Time+date" menu.

Caution ***The conversion between summer and winter time does not take place automatically!***

6.15 Bus communication

BUS

The bus communication enables remote monitoring and setting of the pump via a fieldbus system.

6.15.1 GENIbus communication

The pump is supplied with an integrated module for GENIbus communication. The pump identifies the bus control after connecting to the corresponding signal input. The "Activate communication?" prompt is displayed. After confirmation, the corresponding symbol appears in the "Activated functions" area in the "Operation" menu.

In the "Setup > Bus" menu the GENIbus address can be set from 32 to 231 and bus control can be deactivated.

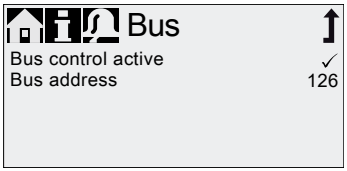

TM04 1139 2410

Fig. 35 Bus menu

6.15.2 Profibus® communication

The pump can be integrated into a Profibus DP network using the additional E-box 150 (retrofitting possible for software version V2.0 and higher).

Warning

Prior to installation and start-up, read the documentation delivered with the E-Box 150!

The functional profile for Profibus communication and the GSD-file can be found on the product CD delivered with the E-box 150.

Activate communication

1. Set the pump to operating state "Stop" with the [Start/stop] key.
2. Switch off the power supply of the pump.
3. Install and connect the E-Box 150 as described in the separate installation and operating instructions of the E-Box 150.
4. Switch on the power supply of the pump.

The "Activate communication?" prompt is displayed.

After confirmation, the "Bus" symbol appears in the "Activated functions" area of the "Operation" menu, no matter if the prompt was accepted or refused.

If the prompt has been accepted, the bus control function is activated. If the prompt has been refused, bus control function can be activated in "Setup > Bus" menu.

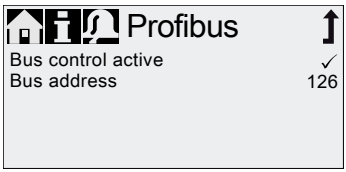

TM04 1139 2410

Fig. 36 Submenu for Profibus

Setting the bus address

1. Enter "Setup > Bus" menu and set desired bus address from 0 to 126.
2. The pump needs to be restarted to initialise the new bus address. Switch off the power supply of the pump and wait for approximately 20 seconds.
3. Switch on the power supply of the pump.

The pump is initialised with the new bus address.

Characteristics of bus communication

To start and stop the pump via Profibus, it needs to be in operating state "Running". When the pump is remotely stopped from Profibus, the "External stop" symbol is displayed and the pump switches to operating state "Standby".

While bus control function is activated, the "Setup" menu only shows the "Bus" and "Key lock" submenus. The other main menus, the "External stop" function and the keys are still available.

All operation modes (see section *6.4 Operation modes*) can still be used when bus control is activated. This allows to use the bus control only for monitoring and setting the pump. In this case the "ProfibusWatchDog" (see funtional profile on E-Box product CD) should be deactivated in Profibus control, because otherwise faults in communication can stop the pump.

Note ***To change any settings manually, the bus control function must be deactivated temporarily.***

The analog output can not be used while the pump is bus-controlled as both functions use the same electrical connection. See section *4.3 Electrical connection*.

Deactivate communication

Warning

After deactivating the bus control function, the pump can start automatically!

Before deactivating the bus control function, set the pump to operating state "Stop"!

Bus control function can be deactivated in the "Setup > Bus" menu. After deactivation all submenus in "Setup" menu are available.

The "Bus" symbol in the display disappears at next restart of the pump, after the E-Box plug was disconnected.

Caution ***After disconnecting any plug, always refit protective cap!***

Communication faults

Faults are only detected, if the "ProfibusWatchDog" (see funtional profile on E-Box product CD) is activated.

Warning

After a communication fault is repaired, the pump can start automatically, depending on current bus control and pump settings!

Before repairing any fault, set the pump to operating state "Stop"!

In case of bus communication faults (e.g. communication cable break), the pump stops dosing and switches to operating state "Standby" approximately 10 seconds after the fault was detected. An alarm is triggered, detailing the cause of the fault. See section *8. Faults*.

6.16 Inputs/Outputs

In the "Setup > Inputs/Outputs" menu, you can configure the two outputs "Relay 1+Relay 2" and the signal inputs "External stop", "Empty signal" and "Low-level signal".

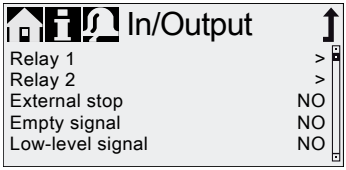

TM04 1152 1110

Fig. 37 Inputs/Outputs menu

6.16.1 Relay outputs

The pump can switch two external signals using installed relays. The relays are switched by potential-free pulses. The connection diagram of the relays is shown in section *4.3 Electrical connection*. Both relays can be allocated with the following signals:

Relay 1 signal	Relay 2 signal	Description
Alarm *	Alarm	Display red, pump stopped (e.g. empty signal, etc.)
Warning *	Warning	Display yellow, pump is running (e.g. low-level signal, etc.)
Stroke signal	Stroke signal	Each full stroke
Pump dosing	Pump dosing *	Pump running and dosing
Pulse input **	Pulse input **	Each incoming pulse from pulse input
Bus control	Bus control	Activated by a command in the bus communication
	Timer Cycle	See following sections
	Timer Week	See following sections
Contact type		
NO *	NO *	Normally open contact
NC	NC	Normally closed contact

* Factory setting

** The correct transmission of incoming pulses can only be guaranteed up to a pulse frequency of 5 Hz.

Timer Cycle (Relay 2)

For the "Relay 2 > Timer Cycle" function, set the following parameters:

- On (t_1)
- Start delay (t_2)
- Cycle time (t_3)

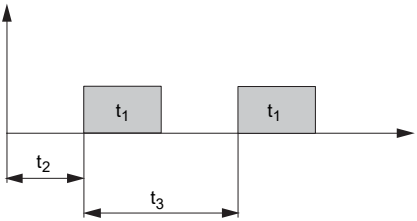

TM04 1124 2110

Fig. 38 Diagram

Timer Week (Relay 2)

This function saves up to 16 relay on-times for a week. The following settings can be made for each relay switching operation in the "Relay 2 > Timer Week" menu:

- Procedure (No.)
- On time (duration)
- Start time
- Weekdays.

6.16.2 External stop

The pump can be stopped via an external pulse, e.g. from a control room. When activating the external stop pulse, the pump switches from the operating state "Running" into the operating state "Standby". The corresponding symbol appears in the "Signal/error display" area of the display.

Caution

Frequent disengagement from the mains voltage, e.g. via a relay, can result in damage to the pump electronics and in the breakdown of the pump. The dosing accuracy is also reduced as a result of internal start procedures.

Do not control the pump via the mains voltage for dosing purposes!

Only use the "External stop" function to start and stop the pump!

The contact type is factory-set to normally open contact (NO). In the "Setup > Inputs/Outputs > External stop" menu, the setting can be changed to normally closed contact (NC).

6.16.3 Empty and Low level signals

In order to monitor the filling level in the tank, a dual-level sensor can be connected to the pump. The pump responds to the signals as follows:

Sensor signal	Pump status
Low level	• Display is yellow • Flashes • Pump continues running
Empty	• Display is red • Flashes • Pump stops

Caution ***When the tank is filled up again, the pump restarts automatically!***

Both signal inputs are allocated to the normally open contact (NO) in the factory. They can be re-allocated in the "Setup > Inputs/Outputs" menu to normally closed contact (NC).

6.17 Basic settings

All settings can be reset to the settings default upon delivery in the "Setup > Basic settings" menu.

Selecting "Save customer settings" saves the current configuration to the memory. This can then be activated using "Load customer settings".

The memory always contains the previously saved configuration. Older memory data is overwritten.

7. Service

In order to ensure a long service life and dosing accuracy, wearing parts such as diaphragms and valves must be regularly checked for signs of wear. Where necessary, replace worn parts with original spare parts made from suitable materials.

Should you have any questions, please contact your service partner.

Warning

If the diaphragm leaks or is broken, dosing liquid will escape from the drain opening on the dosing head (see fig. 3).

Take suitable precautions to prevent harm to health and damage to property caused by escaping dosing liquid!

Check daily whether liquid is escaping from the drain opening!

7.1 Cleaning

If necessary, clean all pump surfaces with a dry and clean cloth.

7.2 Service system

According to the motor runtime or after a defined period of operation, service requirements will appear. Service requirements appear regardless of the current operating state of the pump and do not affect the dosing process.

Service requirement	Motor runtime [h] *	Time interval [months] *
Service soon!	7500	23
Service now!	8000	24

* Since the last service system reset

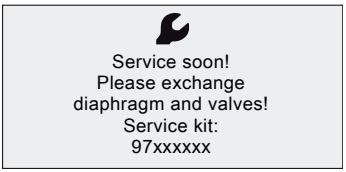

TM04 1131 1110

Fig. 39 Service soon!

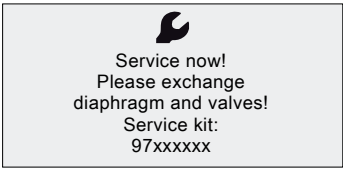

TM04 1131 1110

Fig. 40 Service now!

The service requirement signals when the replacement of wearing parts is due and displays the number of the service kit. Press the click wheel to temporarily hide the service prompt.

When the "Service now!" message appears (displayed daily), the pump must be serviced immediately. The symbol appears in the "Operation" menu.

The number of the service kit required is also displayed in the "Info" menu.

For media which result in increased wear, the service interval must be shortened.

7.3 Perform service

Only spare parts and accessories from Grundfos should be used for maintenance. The usage of non-original spare parts and accessories renders any liability for resulting damages null and void.

Information about carrying out maintenance can be found in the service kit catalog on our homepage (www.grundfosalldos.com).

Warning

Risk of chemical burns!

When dosing dangerous media, observe the corresponding precautions in the safety data sheets!

Wear protective clothing (gloves and goggles) when working on the dosing head, connections or lines!

Do not allow any chemicals to leak from the pump. Collect and dispose of all chemicals correctly!

Caution

Before any work to the pump, the pump must be in the "Stop" operating state or be disconnected from the mains. The system must be pressureless!

7.3.1 Dosing head overview

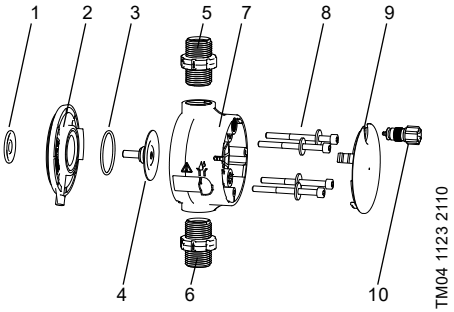

Fig. 41 Changing the diaphragm and valves

1	Safety diaphragm
2	Flange
3	O-ring
4	Diaphragm
5	Valve on discharge side
6	Valve on suction side
7	Dosing head
8	Screws with discs
9	Cover
10	Deaeration valve

7.3.2 Dismantling the diaphragm and valves

1. Make system pressureless.
2. Empty dosing head before maintenance and flush it if necessary.
3. Set pump to "Stop" ■ operating state using the [Start/stop] key.
4. Press the [Start/stop] and [100%] keys at the same time to put the diaphragm into "out" position.
   – Symbol (– must be displayed (see fig. 14).
5. Take suitable steps to ensure that the returning liquid is safely collected.
6. Dismantle suction, pressure and deaeration hose.
7. Dismantle valves on suction and discharge side (5, 6).
8. Remove the cover (9).
9. Undo screws (8) on the dosing head (7) and remove with discs.
10. Remove the dosing head (7).
11. Unscrew diaphragm (4) counter-clockwise and remove with flange (2).

7.3.3 Reassembling the diaphragm and valves

1. Attach flange (2) correctly and screw on new diaphragm (4) clockwise.
   – Make sure that the O-ring (3) is seated correctly!
2. Press the [Start/stop] and [100%] keys at the same time to put the diaphragm into "in" position.
   – Symbol)– must be displayed (see fig. 14).
3. Attach the dosing head (7).
4. Install screws with discs (8) and cross-tighten.
   – Torque: 3 Nm.
5. Attach the cover (9).
6. Install new valves (5, 6).
   – Do not interchange valves and pay attention to direction of arrow.
7. Connect suction, pressure and deaeration hose (see section *4.2 Hydraulic connection*)
8. Press the [Start/stop] key to leave the service mode.
9. Deaerate dosing pump (see section *5.2 Deaerating the pump*).
10. Please observe the notes on commissioning in section *5. Start-up*!

7.4 Resetting the service system

After performing the service, the service system must be reset using the "Info > Reset service system" function.

7.5 Repairs

Warning

The pump housing must only be opened by personnel authorised by Grundfos!

Repairs must only be carried out by authorised and qualified personnel!

Switch off the pump and disconnect it from the voltage supply before carrying out maintenance work and repairs!

After consulting Grundfos, please send the pump, together with the safety declaration completed by a specialist, to Grundfos. The safety declaration can be found at the end of these instructions. It must be copied, completed and attached to the pump.

Caution

If the pump has been used to dose toxic liquids or liquids hazardous to health, the pump must be cleaned prior to dispatch!

If the above requirements are not met, Grundfos may refuse to accept delivery of the pump. The shipping costs will be charged to the sender.

8. Faults

In the event of faults in the dosing pump, a warning or an alarm is triggered.
The corresponding fault symbol flashes in the "Operation" menu, see section *8.1 List of faults*.
The cursor jumps to the "Alarm" main menu symbol.
Press the click wheel to open the "Alarm" menu and, where necessary, faults to be acknowledged will be acknowledged.

A yellow display indicates a warning and the pump continues running.

A red display indicates an alarm and the pump is stopped.

The last 10 faults are stored in the "Alarm" main menu. When a new fault occurs, the oldest fault is deleted.

The two most recent faults are shown in the display, you can scroll through all the other faults. The time and cause of the fault are displayed.

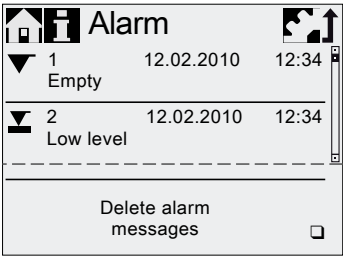

TM04 1109 1010

The list of faults can be deleted at the end of the list.

If there is a service requirement, this appears when the "Alarm" menu is opened. Press the click wheel to temporarily close the service prompt (see section *7.2 Service system*).

8.1 List of faults

8.1.1 Faults with error message

Display in the "Alarm" menu	Possible cause	Possible remedy
Empty (Alarm)	• Dosing medium tank empty	• Fill tank. • Check contact setting (NO/NC).
Low level (Warning)	• Dosing medium tank almost empty	
Overpressure (Alarm)	• Discharge valve blocked • Isolating valve in discharge line closed • Pressure peaks due to high viscosity • Max. pressure set too low (see section *6.8 Pressure monitoring*)	• Replace valve if necessary (see section *7.3 Perform service*). • Check flow direction of valves (arrow) and correct if necessary. • Open the isolating valve (on the discharge side). • Enlarge diameter of discharge line. • Change pressure setting (see section *6.8 Pressure monitoring*).
Low backpressure (Warning/alarm *)	• Faulty diaphragm • Broken discharge line • Pressure differential between suction and discharge side too low • Leakage in the pressure loading valve at Q < 1 l/h • Deaeration valve open	• Change the diaphragm (see section *7.3 Perform service*). • Check discharge line and repair if necessary. • Install additional spring-loaded valve (approx. 3 bar) on the discharge side. • Close the deaeration valve.
Air bubble (Warning)	• Broken/leaky suction line • Strongly degassing medium • Tank dosing medium empty	• Check suction line and repair if necessary. • Provide positive inlet pressure (place dosing medium tank above the pump). • Enable "SlowMode" (see section *6.6 SlowMode*). • Fill tank.
Cavitation (Warning)	• Blocked/constricted/squeezed suction line • Blocked/constricted suction valve • Suction lift too high • Viscosity too high	• Enable "SlowMode" (see section *6.6 SlowMode*). • Reduce suction lift. • Increase suction hose diameter. • Check suction line and open isolating valve if necessary.
Suct. valve leak (Warning)	• Leaky/dirty suction valve • Deaeration valve open	• Check valve and tighten it up. • Flush system. • Replace valve if necessary (see section *7.3 Perform service*). • Check O-ring position. • Install filter in suction line. • Close the deaeration valve.
Disch. valve leak (Warning)	• Leaky/dirty discharge valve • Leakage in the pressure loading valve • Deaeration valve open	• Check valve and tighten it up. • Flush system. • Replace valve if necessary (see section *7.3 Perform service*). • Check O-ring position. • Install screen in suction line. • Close the deaeration valve. • Install spring-loaded valve on the discharge side.
Flow deviation (Warning)	• Considerable deviation between target and actual flow • Pump not or incorrectly calibrated	• Check installation. • Calibrate the pump (see section *5.3 Calibrating the pump*).

Display in the "Alarm" menu	Possible cause	Possible remedy
Pressure sensor (Warning)	• Broken "FlowControl" cable (see fig. 11) • Sensor defect • Pressure sensor not correctly calibrated.	• Check plug connection. • Change sensor if necessary. • Calibrate pressure sensor correctly (see section *6.8.2 Calibration of pressure sensor*).
Motor blocked (Alarm)	• Backpressure greater than nominal pressure • Damage to gears	• Reduce backpressure. • Arrange for repair of gears, if necessary.
BUS Bus error (Alarm)	• Fieldbus communication error	• Check cables for correct specification and damage; replace if necessary. • Check cable routing and shielding; correct if necessary.
E-Box (Alarm)	• E-Box connection error • Faulty E-Box	• Check plug connection. • Replace E-Box if necessary.
Cable break (Alarm)	• Defect in analog cable 4-20 mA (input current < 2 mA)	• Check cable/plug connections and replace, if necessary. • Check signal transmitter.
Service now (Warning)	• Time interval for service expired	• Perform service (see section *7.3 Perform service*).

* Depending on setting

8.1.2 General faults

Fault	Possible cause	Possible remedy
Dosing flow too high	Inlet pressure greater than backpressure	Install additional spring-loaded valve (approx. 3 bar) on the discharge side.
		Increase pressure differential.
	Incorrect calibration	Calibrate the pump (see section *5.3 Calibrating the pump*).
No dosing flow or dosing flow too low	Air in dosing head	Deaerate the pump.
	Faulty diaphragm	Change the diaphragm (see section *7.3 Perform service*).
	Leakage/fracture in lines	Check and repair lines.
	Valves leaking or blocked	Check and clean valves.
	Valves installed incorrectly	Check that the arrow on the valve housing is pointing in the direction of flow. Check whether all O-rings are installed correctly.
	Blocked suction line	Clean suction line/install filter.
	Suction lift too high	Reduce suction lift.
		Install priming aid.
		Enable "SlowMode" (see section *6.6 SlowMode*).
	Viscosity too high	Enable "SlowMode" (see section *6.6 SlowMode*).
		Use hose with larger diameter.
		Install spring-loaded valve on the discharge side.
	Faulty calibration	Calibrate the pump (see section *5.3 Calibrating the pump*).
	Deaeration valve open	Close the deaeration valve.

Fault	Possible cause	Possible remedy
Irregular dosing	Valves leaking or blocked	Tighten up valves, replace valves if necessary (see section *7.3 Perform service*).
	Backpressure fluctuations	Keep backpressure constant.
		Activate "AutoFlowAdapt" (only DDA-FCM).
Liquid escaping from the drain opening on the flange	Faulty diaphragm	Change the diaphragm (see section *7.3 Perform service*).
Liquid escaping	Dosing head screws not tightened	Tighten up screws (see section *4.2 Hydraulic connection*).
	Valves not tightened	Tighten up valves/union nuts (see section *4.2 Hydraulic connection*).
Pump not sucking in	Suction lift too high	Reduce suction lift; if necessary, provide positive inlet pressure.
	Backpressure too high	Open the deaeration valve.
	Soiled valves	Flush system, replace valves if necessary (see section *7.3 Perform service*).

9. Disposal

This product or parts of it must be disposed of in an environmentally sound way.
Use appropriate waste collection services.
If this is not possible, contact the nearest Grundfos company or service workshop.

Subject to alterations.

Safety declaration

Please copy, fill in and sign this sheet and attach it to the pump returned for service.

Note ***Fill in this document using English or German language.***

Product type (nameplate) _____

Model number (nameplate) _____

Dosing medium _____

Fault description

Please make a circle around the damaged parts.
In the case of an electrical or functional fault, please mark the cabinet.

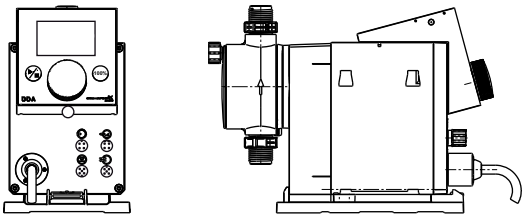

TM04 1185 1110

Please describe the error/cause of the error in brief.

_____

_____

We hereby declare that the pump has been cleaned and is completely free from chemical, biological and radioactive substances.

_____
Date and signature

_____
Company stamp

Argentina
Bombas GRUNDFOS de Argentina S.A.
Ruta Panamericana km. 37.500 Lote 34A
1619 - Garin
Pcia. de Buenos Aires
Phone: +54-3327 414 444
Telefax: +54-3327 411 111

Australia
GRUNDFOS Pumps Pty. Ltd.
P.O. Box 2040
Regency Park
South Australia 5942
Phone: +61-8-8461-4611
Telefax: +61-8-8340 0155

Austria
GRUNDFOS Pumpen Vertrieb Ges.m.b.H.
Grundfosstraße 2
A-5082 Grödig/Salzburg
Tel.: +43-6246-883-0
Telefax: +43-6246-883-30

Belgium
N.V. GRUNDFOS Bellux S.A.
Boomsesteenweg 81-83
B-2630 Aartselaar
Tél.: +32-3-870 7300
Télécopie: +32-3-870 7301

Belarus
Представительство ГРУНДФОС в Минске
220123, Минск,
ул. В. Хоружей, 22, оф. 1105
Тел.: +(375) 17 233 97 65
Факс: (375) 17 233 97 69
E-mail: grundfos_minsk@mail.ru

Bosnia/Herzegovina
GRUNDFOS Sarajevo
Trg Heroja 16,
BiH-71000 Sarajevo
Phone: +387 33 713 290
Telefax: +387 33 659 079
e-mail: grundfos@bih.net.ba

Brazil
BOMBAS GRUNDFOS DO BRASIL
Av. Humberto de Alencar Castelo Branco, 630
CEP 09850 - 300
São Bernardo do Campo - SP
Phone: +55-11 4393 5533
Telefax: +55-11 4343 5015

Bulgaria
Grundfos Bulgaria EOOD
Slatina District
Iztochna Tangenta street no. 100
BG - 1592 Sofia
Tel. +359 2 49 22 200
Fax. +359 2 49 22 201
email: bulgaria@grundfos.bg

Canada
GRUNDFOS Canada Inc.
2941 Brighton Road
Oakville, Ontario
L6H 6C9
Phone: +1-905 829 9533
Telefax: +1-905 829 9512

China
Grundfos Alldos
Dosing & Disinfection
ALLDOS (Shanghai) Water Technology Co. Ltd.
West Unit, 1 Floor, No. 2 Building (T 4-2)
278 Jinhu Road, Jin Qiao Export Processing Zone
Pudong New Area
Shanghai, 201206
Phone: +86 21 5055 1012
Telefax: +86 21 5032 0596
E-mail: grundfosalldos-CN@grundfos.com

China
GRUNDFOS Pumps (Shanghai) Co. Ltd.
50/F Maxdo Centre No. 8 Xing Yi Rd.
Hongqiao Development Zone
Shanghai 200336
PRC
Phone: +86-21 6122 5222
Telefax: +86-21 6122 5333

Croatia
GRUNDFOS CROATIA d.o.o.
Cebini 37, Buzin
HR-10010 Zagreb
Phone: +385 1 6595 400
Telefax: +385 1 6595 499
www.grundfos.hr

Czech Republic
GRUNDFOS s.r.o.
Čapkovského 21
779 00 Olomouc
Phone: +420-585-716 111
Telefax: +420-585-716 299

Denmark
GRUNDFOS DK A/S
Martin Bachs Vej 3
DK-8850 Bjerringbro
Tlf.: +45-87 50 50 50
Telefax: +45-87 50 51 51
E-mail: info_GDK@grundfos.com
www.grundfos.com/DK

Estonia
GRUNDFOS Pumps Eesti OÜ
Peterburi tee 92G
11415 Tallinn
Tel: + 372 606 1690
Fax: + 372 606 1691

Finland
OY GRUNDFOS Pumput AB
Mestarintie 11
FIN-01730 Vantaa
Phone: +358-3066 5650
Telefax: +358-3066 56550

France
Pompes GRUNDFOS Distribution S.A.
Parc d'Activités de Chesnes
57, rue de Malacombe
F-38290 St. Quentin Fallavier (Lyon)
Tél.: +33-4 74 82 15 15
Télécopie: +33-4 74 94 10 51

Germany
GRUNDFOS Water Treatment GmbH
Reetzstraße 85
D-76327 Pfinztal (Söllingen)
Tel.: +49 7240 61-0
Telefax: +49 7240 61-177
E-mail: gwt@grundfos.com

Germany
GRUNDFOS GMBH
Schlüterstr. 33
40699 Erkrath
Tel.: +49-(0) 211 929 69-0
Telefax: +49-(0) 211 929 69-3799
E-mail: infoservice@grundfos.de
Service in Deutschland:
E-mail: kundendienst@grundfos.de

Greece
GRUNDFOS Hellas A.E.B.E.
20th km. Athinon-Markopoulou Av.
P.O. Box 71
GR-19002 Peania
Phone: +0030-210-66 83 400
Telefax: +0030-210-66 46 273

Hong Kong
GRUNDFOS Pumps (Hong Kong) Ltd.
Unit 1, Ground floor
Siu Wai Industrial Centre
29-33 Wing Hong Street &
68 King Lam Street, Cheung Sha Wan
Kowloon
Phone: +852-27861706 / 27861741
Telefax: +852-27858664

Hungary
GRUNDFOS Hungária Kft.
Park u. 8
H-2045 Törökbálint,
Phone: +36-23 511 110
Telefax: +36-23 511 111

India
GRUNDFOS Pumps India Private Limited
118 Old Mahabalipuram Road
Thoraipakkam
Chennai 600 097
Phone: +91-44 4596 6800

Indonesia
PT GRUNDFOS Pompa
Jl. Rawa Sumur III, Blok III / CC-1
Kawasan Industri, Pulogadung
Jakarta 13930
Phone: +62-21-460 6909
Telefax: +62-21-460 6910 / 460 6901

Ireland
GRUNDFOS (Ireland) Ltd.
Unit A, Merrywell Business Park
Ballymount Road Lower
Dublin 12
Phone: +353-1-4089 800
Telefax: +353-1-4089 830

Italy
GRUNDFOS Pompe Italia S.r.l.
Via Gran Sasso 4
I-20060 Truccazzano (Milano)
Tel.: +39-02-95838112
Telefax: +39-02-95309290 / 95838461

Japan
GRUNDFOS Pumps K.K.
Gotanda Metalion Bldg. 5F,
5-21-15, Higashi-gotanda
Shiagawa-ku, Tokyo,
141-0022 Japan
Phone: +81 35 448 1391
Telefax: +81 35 448 9619

Korea
GRUNDFOS Pumps Korea Ltd.
6th Floor, Aju Building 679-5
Yeoksam-dong, Kangnam-ku, 135-916
Seoul, Korea
Phone: +82-2-5317 600
Telefax: +82-2-5633 725

Latvia
SIA GRUNDFOS Pumps Latvia
Deglava biznesa centrs
Augusta Deglava ielā 60, LV-1035, Rīga,
Tālr.: + 371 714 9640, 7 149 641
Fakss: + 371 914 9646

Lithuania
GRUNDFOS Pumps UAB
Smolensko g. 6
LT-03201 Vilnius
Tel: + 370 52 395 430
Fax: + 370 52 395 431

Malaysia
GRUNDFOS Pumps Sdn. Bhd.
7 Jalan Peguam U1/25
Glenmarie Industrial Park
40150 Shah Alam
Selangor
Phone: +60-3-5569 2922
Telefax: +60-3-5569 2866

Mexico
Bombas GRUNDFOS de México S.A. de C.V.
Boulevard TLC No. 15
Parque Industrial Stiva Aeropuerto
Apodaca, N.L. 66600
Phone: +52-81-8144 4000
Telefax: +52-81-8144 4010

Netherlands
GRUNDFOS Netherlands
Veluwezoom 35
1326 AE Almere
Postbus 22015
1302 CA ALMERE
Tel.: +31-88-478 6336
Telefax: +31-88-478 6332
E-mail: info_gnl@grundfos.com

New Zealand
GRUNDFOS Pumps NZ Ltd.
17 Beatrice Tinsley Crescent
North Harbour Industrial Estate
Albany, Auckland
Phone: +64-9-415 3240
Telefax: +64-9-415 3250

Norway
GRUNDFOS Pumper A/S
Strømsveien 344
Postboks 235, Leirdal
N-1011 Oslo
Tlf.: +47-22 90 47 00
Telefax: +47-22 32 21 50

Poland
GRUNDFOS Pompy Sp. z o.o.
ul. Klonowa 23
Baranowo k. Poznania
PL-62-081 Przeźmierowo
Tel: (+48-61) 650 13 00
Fax: (+48-61) 650 13 50

Portugal
Bombas GRUNDFOS Portugal, S.A.
Rua Calvet de Magalhães, 241
Apartado 1079
P-2770-153 Paço de Arcos
Tel.: +351-21-440 76 00
Telefax: +351-21-440 76 90

Romania
GRUNDFOS Pompe România SRL
Bd. Biruintei, nr 103
Pantelimon county Ilfov
Phone: +40 21 200 4100
Telefax: +40 21 200 4101
E-mail: romania@grundfos.ro

Russia
ООО Грундфос
Россия, 109544 Москва, ул. Школьная 39
Тел. (+7) 495 737 30 00, 564 88 00
Факс (+7) 495 737 75 36, 564 88 11
E-mail grundfos.moscow@grundfos.com

Serbia
GRUNDFOS Predstavništvo Beograd
Dr. Milutina Ivkovića 2a/29
YU-11000 Beograd
Phone: +381 11 26 47 877 / 11 26 47 496
Telefax: +381 11 26 48 340

Singapore
GRUNDFOS (Singapore) Pte. Ltd.
24 Tuas West Road
Jurong Town
Singapore 638381
Phone: +65-6865 1222
Telefax: +65-6861 8402

Slovenia
GRUNDFOS d.o.o.
Šlandrova 8b, SI-1231 Ljubljana-Črnuče
Phone: +386 1 568 0610
Telefax: +386 1 568 0619
E-mail: slovenia@grundfos.si

South Africa
Grundfos (PTY) Ltd.
Corner Mountjoy and George Allen Roads
Wilbart Ext. 2
Bedfordview 2008
Phone: (+27) 11 579 4800
Fax: (+27) 11 455 6066
E-mail: lsmart@grundfos.com

Spain
Bombas GRUNDFOS España S.A.
Camino de la Fuentecilla, s/n
E-28110 Algete (Madrid)
Tel.: +34-91-848 8800
Telefax: +34-91-628 0465

Sweden
GRUNDFOS AB
(Box 333) Lunnagårdsgatan 6
431 24 Mölndal
Tel.: +46 31 332 23 000
Telefax: +46 31-331 94 60

Switzerland
GRUNDFOS ALLDOS International AG
Schönmattstraße 4
CH-4153 Reinach
Tel.: +41-61-717 5555
Telefax: +41-61-717 5500
E-mail: grundfosalldos-CH@grund-fos.com

Switzerland
GRUNDFOS Pumpen AG
Bruggacherstrasse 10
CH-8117 Fällanden/ZH
Tel.: +41-1-806 8111
Telefax: +41-1-806 8115

Taiwan
GRUNDFOS Pumps (Taiwan) Ltd.
7 Floor, 219 Min-Chuan Road
Taichung, Taiwan, R.O.C.
Phone: +886-4-2305 0868
Telefax: +886-4-2305 0878

Thailand
GRUNDFOS (Thailand) Ltd.
92 Chaloem Phrakiat Rama 9 Road,
Dokmai, Pravej, Bangkok 10250
Phone: +66-2-725 8999
Telefax: +66-2-725 8998

Turkey
GRUNDFOS POMPA San. ve Tic. Ltd. Sti.
Gebze Organize Sanayi Bölgesi
Ihsan dede Caddesi,
2. yol 200. Sokak No. 204
41490 Gebze/ Kocaeli
Phone: +90 - 262-679 7979
Telefax: +90 - 262-679 7905
E-mail: satis@grundfos.com

Ukraine
ТОВ ГРУНДФОС УКРАЇНА
01010 Київ, Вул. Московська 8б,
Тел.:(+38 044) 390 40 50
Фах.: (+38 044) 390 40 59
E-mail: ukraine@grundfos.com

United Arab Emirates
GRUNDFOS Gulf Distribution
P.O. Box 16768
Jebel Ali Free Zone
Dubai
Phone: +971-4- 8815 166
Telefax: +971-4-8815 136

United Kingdom
GRUNDFOS Pumps Ltd.
Grovebury Road
Leighton Buzzard/Beds. LU7 8TL
Phone: +44-1525-850000
Telefax: +44-1525-850011

U.S.A.
GRUNDFOS Pumps Corporation
17100 West 118th Terrace
Olathe, Kansas 66061
Phone: +1-913-227-3400
Telefax: +1-913-227-3500

Uzbekistan
Представительство ГРУНДФОС в Ташкенте
700000 Ташкент ул.Усмана Носира 1-й тупик 5
Телефон: (3712) 55-68-15
Факс: (3712) 53-36-35

Addresses revised 27.04.2012

95724708 0412
ECM: 1090660

The name Grundfos, the Grundfos logo, and the payoff Be–Think–Innovate are registrated trademarks owned by Grundfos Management A/S or Grundfos A/S, Denmark. All rights reserved worldwide.

Advantages of the Model 2850 In-line Static Mixer

- Low Cost
- Designed for PVC, CPVC, stainless steel systems
- Integral injection fittings
- Predictable mixing
- Easy installation
- No maintenance required
- No moving parts
- Available with flanged, threaded, or tri-clover end fittings

Information Required for Express Service Quotation:

- Main Pipe Size and I.D.
- Main Line Fluid and Flow Rate
- Main Line Temperature, Pressure and Viscosity
- Quality of Injected Fluids
- Flow Rate, Temperature, Viscosity of Each Injected Fluid
- Material of Mixer Body
- Material of Mixer Plate
- Injection Fitting Material
- Other Special Requirements

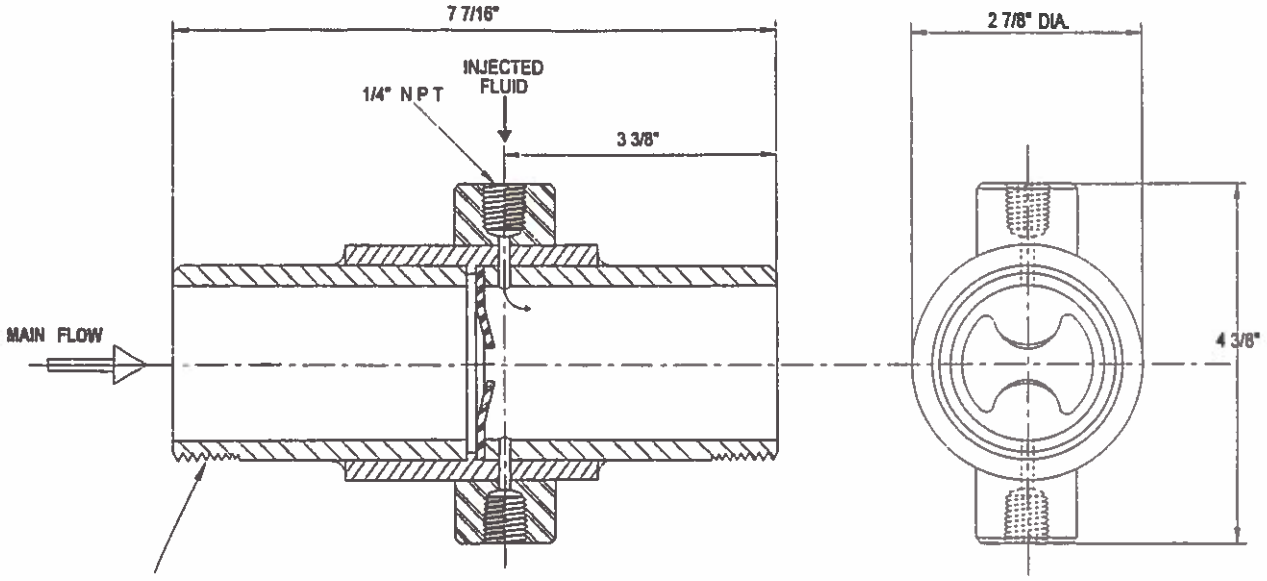

LOW COST, INLINE, STATIC MIXER
EASY INSTALLATION AND HOOK-UP
LONG SERVICE LIFE
AVAILABLE IN 1" THROUGH 12"
SCHEDULE 80 PVC PIPE

WESTFALL

WESTFALL MANUFACTURING COMPANY
15 Broad Common Road
Bristol, Rhode Island 02809-2721 USA
Email: info@westfallmfg.net
Web-site: www.westfallmfg.com
Tel: 401-253-3799
(888) 928-3747
FAX: 401-253-6530

Model 2850 In-Line Static Mixer

Bulletin 2850 Jan 2002

OPERATION & MAINTENANCE MANUAL
FOR THE
MODEL 2800/2850 WESTFALL
STATIC MIXER

INSTRUCTIONS:

1. INSTALL BETWEEN PIPE FLANGES WITH FLOW DIRECTION ARROWS POINTING DOWNSTREAM.

2. SEQUENTIALLY TIGHTEN FLANGE BOLTS FOR UNIFORM GASKET COMPRESSION (MODEL 2800 0NLY)

MAINTENANCE:

1. INSPECT INJECTION NOZZLES FOR OBSTRUCTIONS OR DAMAGE.

2. INSPECT LEADING AND TRAILING FACES OF MIXER FINS FOR EROSION OR PITTING AS NEEDED.

SPARE PARTS:

1. NO SPARE PARTS REQUIRED.

NOTE: MIXER PERFORMANCE DEPENDS ON INSTALLATION WITH FLOW DIRECTION ARROWS POINTING DOWNSTREAM.

FLUIDS MUST BE INJECTED THROUGH MIXER FLANGE NOZZLES.

SULFURIC ACID APPLICATIONS: MOUNT NOZZLE VERTICALLY UP (AT 6:00 O'CLOCK POSITION). TURN OFF ACID FIRST ON SHUTDOWN.

CONTACT:
WESTFALL MANUFACTURING COMPANY
TOLL FREE @ 888-WATER-47 OR (401) 253-3799
FAX: 401) 253-6530
E-MAIL: info@westfallmfg.net

MANUAL DE MANTENIMIENTO Y OPERACIÓN DEL MEZCLADOR ESTÁTICO TIPO OBLEAS WESTFALL MODELO 2800/2850

INSTRUCCIONES:

1. INSTALAR ENTRE LAS BRIDAS DEL TUBO CON LAS FLECHAS DE DIRECCIÓN DEL FLUJO INDICANDO AGUAS ABAJO.
2. APRETAR SECUENCIALMENTE LOS PERNOS DE LA BRIDA PARA LOGRAR UNA COMPRESIÓN UNIFORME DE LA JUNTA. (MODELO 2800 SOLAMENTE)

MANTENIMIENTO:

1. INSPECCIONE LAS BOQUILLAS DE INYECCIÓN PARA VERIFICAR SI HAY OBSTRUCCIONES O EROSIÓN.
2. CUANDO SEA NECESARIO, INSPECCIONE LAS CARAS DELANTERAS Y TRASERAS DE LA PLACA DEL MEZCLADOR PARA DETERMINAR SI HAY EROSIÓN O PICADO.

REPUESTOS:

1. NO REQUIERE REPUESTOS.

NOTA: EL RENDIMIENTO DEL MEZCLADOR DEPENDE DE QUE SE INSTALE CON LAS FLECHAS DE DIRECCIÓN DEL FLUJO APUNTANDO AGUAS ABAJO.

LOS FLUIDOS SE DEBEN INYECTAR A TRAVÉS DE LAS BOQUILLAS DE LAS BRIDAS DEL MEZCLADOR.

APLICACIONES CON ÁCIDO SULFÚRICO: INSTALE LA BOQUILLA VERTICALMENTE HACIA ARRIBA (EN LA POSICIÓN DE LAS 6:00). CIERRE EL ÁCIDO SULFÚRICO ANTES DE APAGAR EL MEZCLADOR.

CONTACTO:

WESTFALL MANUFACTURING COMPANY

LLAME GRATIS AL 888-WATER-47 O (401) 253-3799

FAX: (401) 253-6530

CORREO ELECTRÓNICO: info@westfallmfg.net

2" WESTFALL MODEL 2850 STATIC MIXER
SCH80 PVC CONSTRUCTION
(1) .8 BETA PVC PLATE
(1) 1/2" PVC QUILL WITH BUILT IN CHECK VALVE
THREADED ENDS

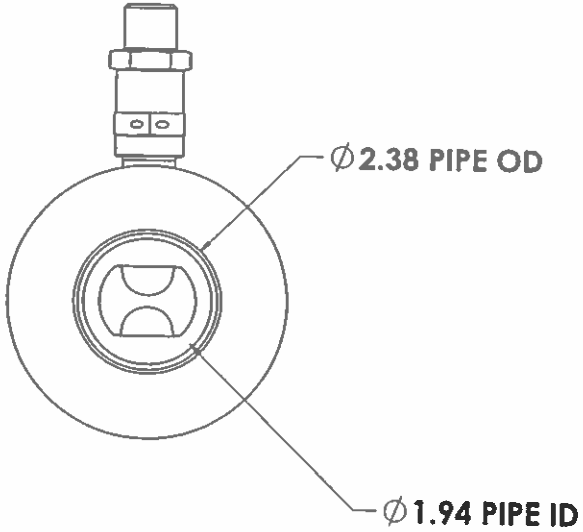

FLOW
------->

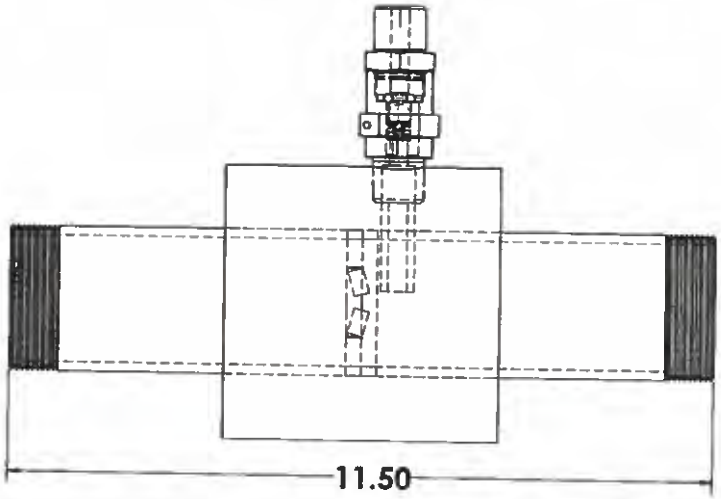

CLIENT APPROVAL:
APPROVED BY: DATE:
PRINT NAME: TITLE:
COMPANY:

WESTFALL

WESTFALL MANUFACTURING COMPANY
15 BROAD COMMON ROAD, BRISTOL RI 02809 U.S.A
P: 401 253-3799 F: 401-253-6530 www.westfallmfg.com

WESTFALL STATIC MIXER
MODEL 2850 - 2"
DIMENSIONS ARE IN INCHES (UNLESS OTHERWISE NOTED)

SCALE		DATE 9.3.2014	
DRAWN BY MGP	CHECKED BY		APPROVED BY

PROJECT
EQUIPMENT
PLANT
SHEET
DWG. NO. 2-2850-B

WESTFALL MANUFACTURING CO.

HEADLOSS CHART

pipe ID ***2.07*** ***inches***

Pipe area 0.0234 ft2

GPM	CFS	ft/s	MODEL 2800 0.7 BETA psi Head loss	MODEL 2800 0.8 BETA psi Head loss	MODEL 2800 0.9 BETA psi Head loss	MODEL 3050 SINGLE psi Head loss	MODEL 3050 DOUBLE psi Head loss	MODEL 3050 TRIPLE psi Head loss
10	0.022	0.95	0.20	0.08	0.04	0.003	0.007	0.010
20	0.045	1.91	0.80	0.33	0.17	0.014	0.028	0.040
30	0.067	2.86	1.79	0.75	0.37	0.031	0.062	0.090
40	0.089	3.81	3.19	1.33	0.66	0.054	0.111	0.160
50	0.111	4.77	4.98	2.08	1.04	0.085	0.173	0.251
60	0.134	5.72	7.17	3.00	1.49	0.123	0.249	0.361
70	0.156	6.67	9.76	4.08	2.03	0.167	0.338	0.491
80	0.178	7.63	12.75	5.33	2.65	0.218	0.442	0.642
90	0.201	8.58	16.13	6.75	3.36	0.276	0.559	0.812
100	0.223	9.53	19.92	8.33	4.15	0.340	0.691	1.002
110	0.245	10.49	24.10	10.08	5.02	0.412	0.836	1.213
120	0.267	11.44	28.68	12.00	5.97	0.490	0.995	1.443

Gray Polyvinyl Chloride (PVC) Type 1 Sheeting

This PVC sheet has excellent corrosion resistance and weather resistance. The working temp is 33 deg F to 160 deg F. and the forming temperatures of 245 deg F. It is good electrical and thermal insulator and has a self-extinguishing per UL Test 94. PVC applications are almost unlimited. It's the most widely used member of the vinyl family. It is excellent when used for corrosion-resistant tanks, ducts, fume hoods, and pipe. Ideal for self-supporting tanks, fabricated parts, tank linings, and spacers. It is not UV stabilized and has a tolerance of +or 10%.

Metering Pump Injection Quills Instructions

The injection quill is ideal for the injection of chemicals into the center stream of a process pipeline. This provides for a more homogeneous mix to take place in the pipeline. Each quill has a built in stainless steel spring-loaded check, to help prevent back siphoning.
The injection quill is available in two sizes, 6" length suitable for 4"-6" pipe diameters and 8" length suitable for 8"-10" pipe diameters. The connection for both sizes is 1/2" NPT or BSP. Six (6) materials of construction are available that provide compatibility for most chemicals injected. Each quill comes standard with a stainless steel spring, as an option Hastelloy C is available at an extra charge (consult factory) or the quill may be ordered with out a spring. Pressure and temperature are dependent on the material of construction and vary from 150 and 1000 PSIG and 50° C (125°F) and 260° C (500°F).

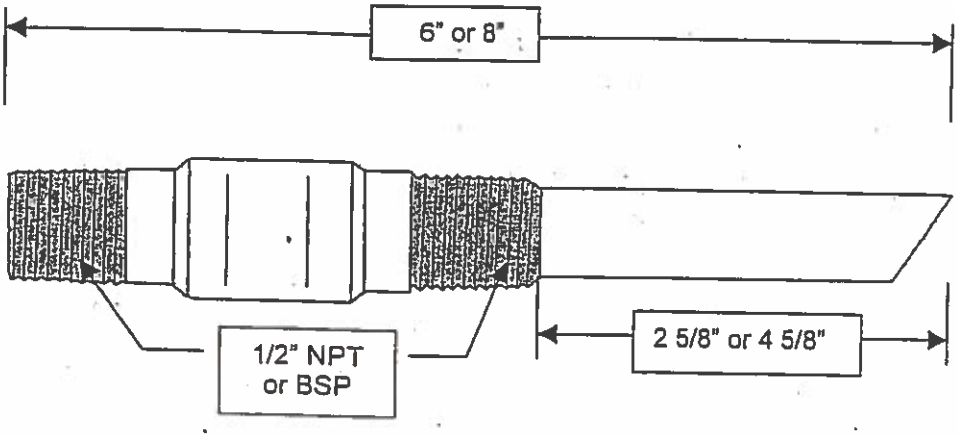

REVISIONS			
LTR	DATE	BY	DESCRIPTION
1		DM	

MIXER PLATE BETA OPENINGS

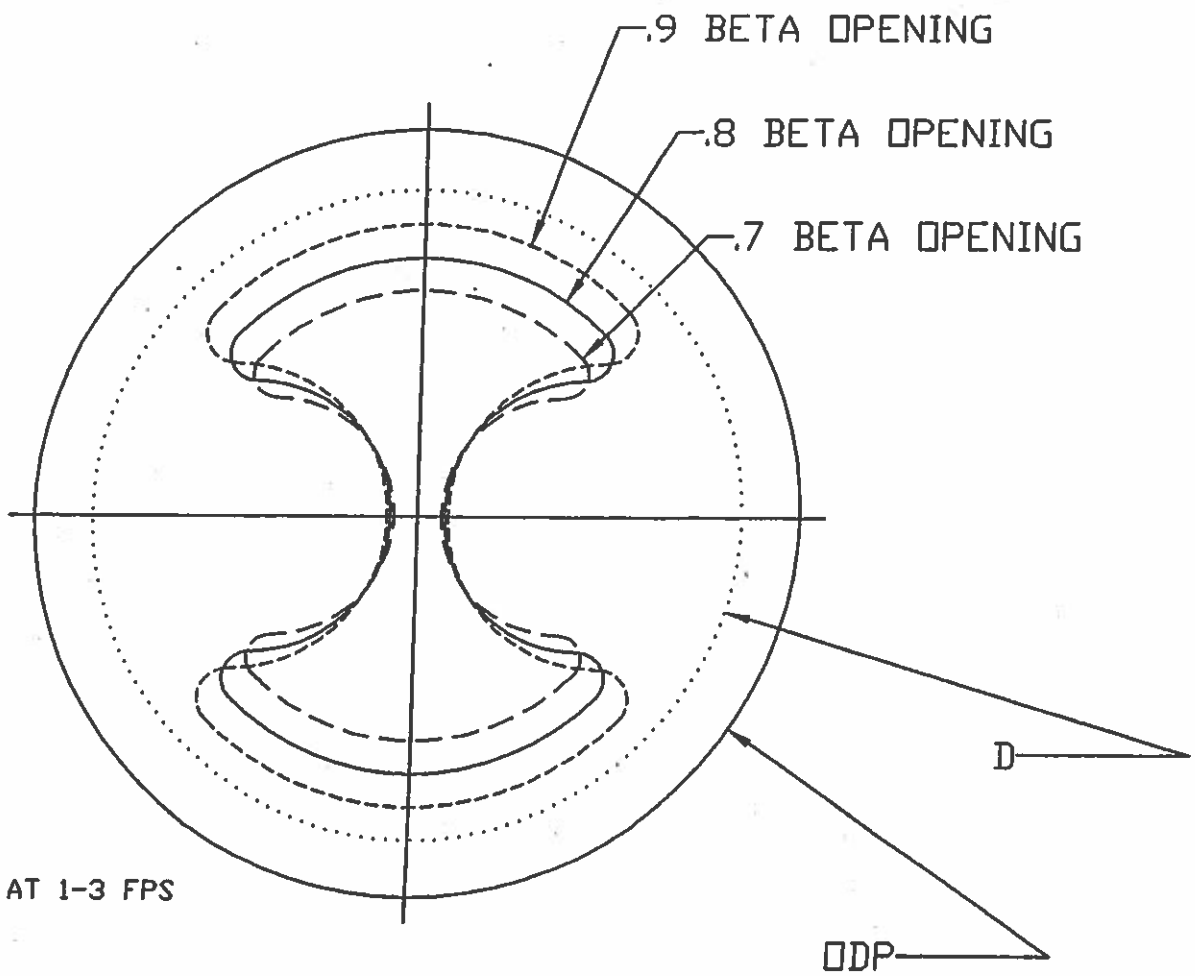

.7 BETA RATIO = EXCELLENT MIXING AT 1-3 FPS
ALDEN LABORATORY CoV = .008

.8 BETA RATIO = EXCELLENT MIXING AT 3-8 FPS
ALDEN LABORATORY CoV = .009

.9 BETA RATIO = EXCELLENT MIXING AT 8-11 FPS
ALDEN LABORATORY CoV = .050

CoV = STANDARD DEVIATION OF THE TEST DATA DIVIDED BY THE AVERAGE OF THE TEST DATA

DIMENSIONS IN INCHES (MM) UNLESS OTHERWISE NOTED	WESTFALL MANFACTURING CO BRISTOL RI 02809 USA	
PROJECT NO	TO SHOW BETA OPENING DIFFERENCE	
EQUIPN NO		
PLANT	DRW. DRM	DRW. No. BETA REFERANCE
	DATE 8/23/03	SCALE NONE / SHEET 1 OF 1

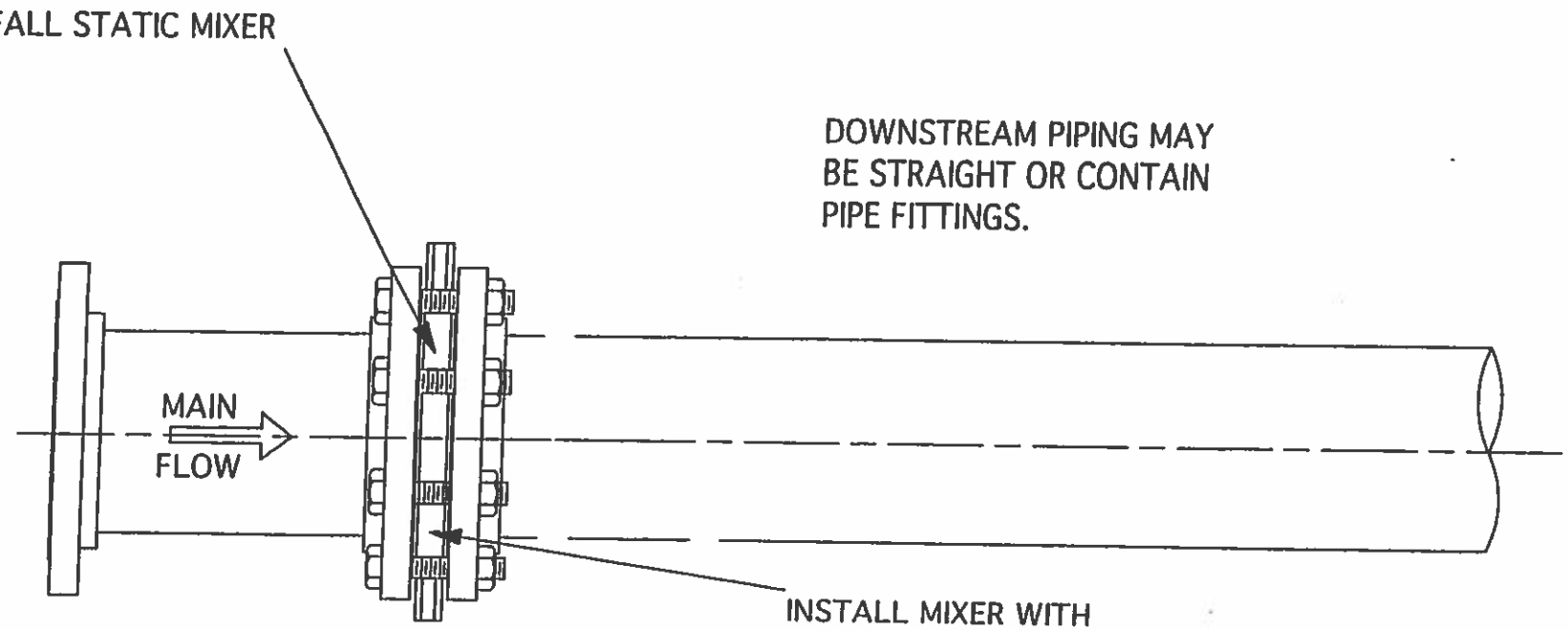

TYPICAL INSTALLATION
PLAN VIEW

I – 2913

WESTFALL
MANUFACTURING

BRISTOL, RHODE ISLAND 02809-0007
PHONE 401-253-3799 FAX 401-253-6530

MODEL 2800
TYPICAL INSTALLATION VIEW

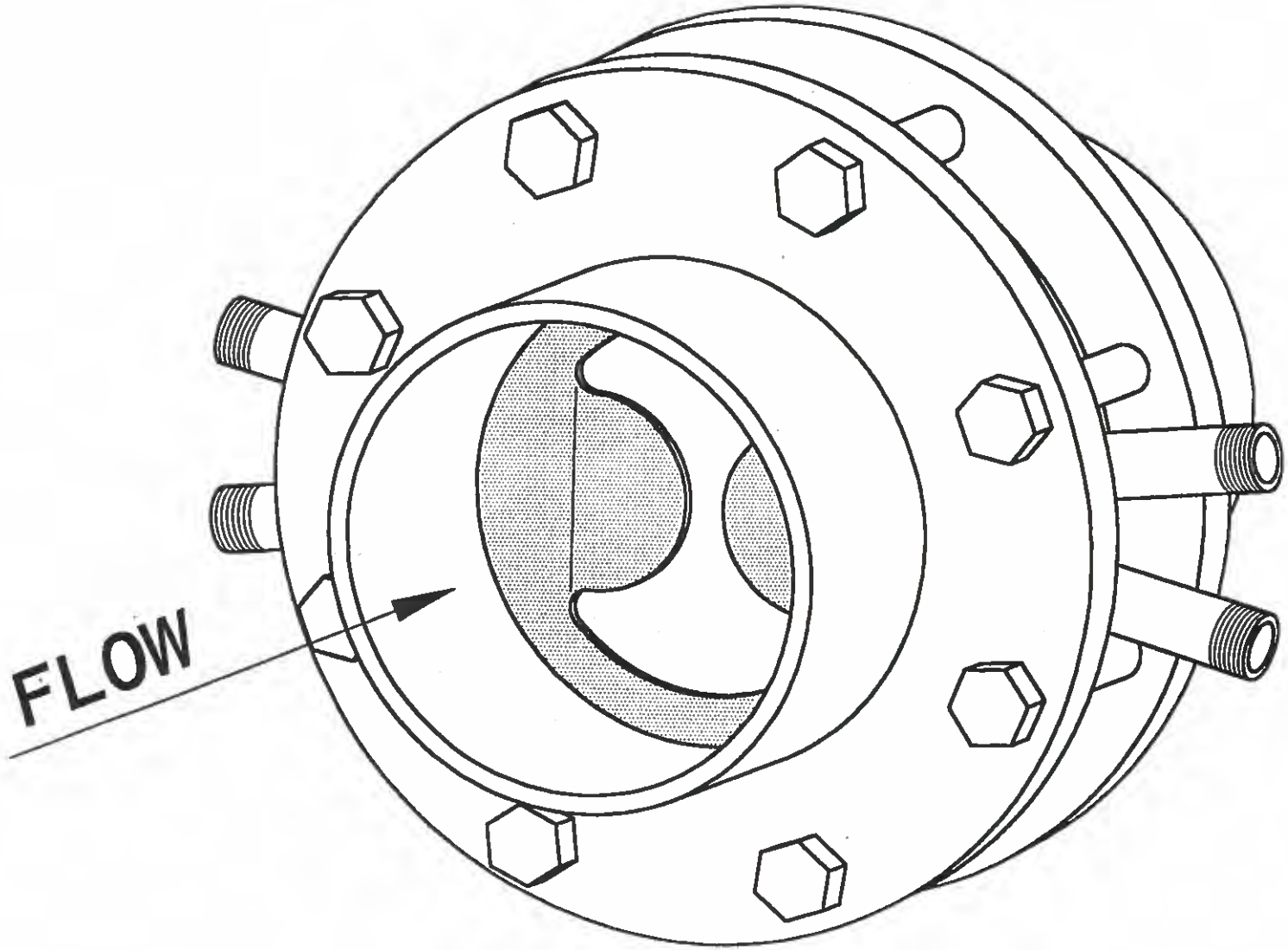

Westfall Manufacturing Company's

Terms and Conditions of Sale

The items described in this document are herby offered for sale at prices established by Westfall Manufacturing Company, its subsidiaries and its authorized distributors (Collectively Seller). This offer and its acceptance by any customer ("Buyer") shall be governed by all the following Terms and Conditions. Buyer's order for any item described in its document, when communicated to verbally or in writing, shall constitute acceptance of this offer.

1. **Terms and Conditions of Sale**: All descriptions, quotations, proposals, offers, acknowledgments, acceptances and sales of Seller's products are subject to and shall be governed exclusively by the terms and conditions stated herein. Buyer's acceptance of any offer to sell is limited to these terms and conditions. Any terms or condition in addition to, or inconsistent with those stated herein, proposed by Buyer in any acceptance of an offer by Seller, are hereby objected to No such additional, different or inconsistent terms and conditions shall become part of the contract between Buyer and Seller unless expressly accepted in writing by Seller. Seller's acceptance of any offer to purchase by Buyer is expressly conditional upon Buyer's assent to all the terms and conditions stated herein, including any terms in addition to, or inconsistent with those contained in Buyer's offer. Acceptance of Seller's products shall in all events constitute such assent.

2. **Payment**: Buyer net 30 days from the date of delivery of the items purchased hereunder shall make Payment. Any claims by Buyer for omissions or shortages in a shipment shall be waived unless Seller receives notice thereof within 30 days after Buyer's receipt of the shipment.

3. **Delivery**: Unless otherwise provided on the face hereof, delivery shall be made F.O.B. Seller's plant. Regardless of the method of delivery, however, risk of loss shall pass to Carrier until delivery is made to the buyer. Any delivery dates are approximate only and seller shall have no liability for any delays in delivery. Shipments are made by common carrier. Freight prepaid and added to invoice.

4. **Warranty:** Seller warrants that the items sold hereunder shall be free from defects in material and workmanship for a period of one year from the date of shipment to Buyer. This warranty comprises the sole and entire warranty pertaining to items provided hereunder. Seller makes no other warranty, guarantee, or representation of any kind whatsoever. All other warranties, including but not limited to, merchantability and fitness for purpose, whether express, implied, or arising by operation of law, trade use, or course of dealing are hereby disclaimed. Not withstanding the foregoing, there are no warranties whatsoever on items built or acquired wholly or partially, to Buyer's designs or specifications.

5. **Limitation of Remedy:** Seller's liability arising from or in anyway connected with items sold or this contract shall be limited exclusively to repair or replacement of the items sold or refund of the purchase price paid by Buyer, at Seller's sole option. In no event shall Seller be liable for any incidental, consequential or special damages of any kind or nature whatsoever, including but not limited to lost profits arising from or in an way connected with this agreement or items sold hereunder, whether alleged to arise from breach of contract, express or implied warranty, or in tort, including without limitation, negligence, failure to warn or strict liability.

6. **Changes, Reschedules, and Cancellations:** Buyer may request to modify the designs or specifications for the items sold hereunder as well as the quantities and delivery dates thereof, or may request to cancel all or part of his order, however, no such requested modifications or cancellation shall become part of the contract between Buyer and Seller unless accepted by Seller in a written amendment to this Agreement. Acceptance of any such requested modification or cancellation shall be at Seller's discretion, and shall be upon such terms and conditions as Seller may require.

7. **Special Tooling:** A tooling charge may be imposed for any special tooling, including without limitation, dies, fixtures, molds and patterns, acquired to manufacture items sold pursuant to this contract. Such special tooling shall be and remain Seller's property notwithstanding payment of any charges by Buyer. In no event will buyer acquire any interest in apparatus belonging to Seller, which is utilized in the manufacture of the items sold hereunder, even if such apparatus has been specially converted or adapted for such manufacture and notwithstanding any charges paid by Buyer. Unless otherwise agreed, Seller shall have the right to alter, discard or otherwise dispose of any special tooling or other property in its sole discretion at anytime.

8. **Buyer's Property:** Any designs, tools, patterns. materials, drawings, confidential information or equipment furnished by Buyer or any other items which become Buyer's property, may be considered obsolete and may be destroyed by Seller after (2) consecutive years have elapsed without Buyers placing an order for the items which are manufactured using such property. Seller shall not be responsible for any loss or damage to such property while it is in Seller's possession or control.

9. **Taxes:** Unless otherwise indicated on the face herein, all prices are exclusive of excise, sales, use, property, occupational or like taxes which may be imposed by any taxing authority upon the manufacture, sale, or delivery of the items sold hereunder. If such taxes must be paid by Seller or if Seller is liable for the collection of such tax, the amount thereof shall be in addition to the amounts for items sold. Buyer agrees to pay all such taxes or to reimburse Seller therefore upon receipt of its invoice. If Buyer claims exemption from any sales, use or other tax imposed by any taxing authority, Buyer shall save Seller harmless from and against any such tax, together with any interest or penalties thereon which may be assessed if the items are held to be taxable.

10. **Indemnity For Infringement of Intellectual Property Rights:** Seller shall have no liability for infringement of any patents, trademarks, copyrights, trade dress, trade secrets or similar rights except as provided in this Part 10. Seller will defend and indemnify Buyer against allegations of infringement of U.S. patents, U.S. trademarks, copyrights, trade dress, and trade secrets (hereinafter "Intellectual Property Rights"). Seller will defend at its expense and will pay the cost of any settlement or damages awarded in an action brought based on an allegation that an item sold pursuant to this contract infringes the Intellectual Property Rights of a third party. Seller's obligation to defend and indemnify Buyer s contingent on Buyer notifying Seller within (10) days after Buyer becomes aware of such allegations of infringement, and Seller having sole control over the defense of any allegations or actions including all negotiations for settlement or compromise. If any item sold hereunder is subject to a claim that it infringes the Intellectual Property Rights of a third party, Seller may, at its sole expense and option, procure for Buyer the right to continue using said item, replace or modify said item so as to make it noninfringing, or offer to accept return of said item and return the purchase price less a reasonable allowance for depreciation. Notwithstanding the foregoing, Seller shall have no liability for claims of infringement based on information provided by Buyer, or directed to items delivered hereunder for which the designs are specified in whole or party by Buyer, or infringement resulting from modification, combination or use in a system of any item sold

hereunder. The foregoing provisions of this Part 10 shall constitute Seller's sole and exclusive liability and Buyer's sole and exclusive remedy for infringement of Intellectual property Rights. If a claim is based on information provided by Buyer or if the design for an item delivered hereunder is specified in whole or in part by Buyer, Buyer shall defend and indemnify Seller for all costs, expenses or judgments resulting from any claim that such items infringe any patent, trademark, copyright, trade dress, trade secret or any similar right.

11. **Force Majeure:** Seller does not assume the risk of and shall not be liable for delay or failure to perform any of Seller's obligations by reason of circumstances beyond the reasonable control of Seller (hereinafter "events of Force Majeure"). Events of Force Majeure shall include without limitation, accidents, acts of God, strikes or labor disputes, acts, laws, rules or regulations of any government or government agency, fires, floods, delays or failures in delivery of carriers or suppliers, shortages of materials and any other cause beyond Seller's control.

12. **Entire Agreement/Governing Law:** The terms and conditions set forth herein, together with any amendments, modifications and any different terms or conditions expressly accepted by Seller in writing, shall constitute the entire Agreement concerning the items sold, and there are no oral or other representations or agreements which pertain thereto. This agreement shall be governed in all respects by the internal law of the State of Rhode Island without regard to such state's conflicts of laws principles. No actions arising out of the sale of the items sold hereunder or either party may bring this agreement more than two (2) years after the cause of action accrues.

Manufacturers Warranty

Westfall Manufacturing Company, the manufacturer of the static mixers, guarantees that the mixer shall be free of all defects caused by inferior materials or poor workmanship for a period of (1) One year from ship date.

This guarantee shall not include damage caused by improper installation, or use of improper chemicals, or improper operations of the unit.

Westfall Manufacturing Company, Inc
15 Broad Common Road
Bristol RI 02809-2721 USA
Voice: (401) 253-3799 or (888) 928-3747
Fax: (401) 253-6530
Email: info@westfallmfg.net
Web: www.westfallmfg.com

Appendix E
System Startup and Calibration

OPERATIONS AND MAINTENANCE PLAN
REMEDIAL CONSTRUCTION ACTIVITIES
WATER TREATMENT SYSTEM
WAUKEGAN, ILLINOIS

System Startup and Calibration

System Startup
Water Treatment System
Waukegan, Illinois

A. Loop 1 - Containment Cells:		
1. General: The purpose of these wells and sump is to extract groundwater containing PCB contaminated water from the containment cells and consolidation facility.		
2. Equipment and Instruments:	Equipment Provided Y/N	Notes
P-1-1-1 to P-1-1-2 - West Containment Cell Extraction Well Pumps	Y	
P-1-2 - Consolidation Facility Sump Pump	Y	
P-1-3-1 to P-1-3-2 - ODC Containment Cell Extraction Well Pumps	Y	
FCV-1-2 - Consolidation Facility Flow Control Valve	Y	
LT-1-1-1 to LT-1-1-2 - West Containment Cell Extraction Well Level Transmitters	NA	Not within SOW
LT-1-2 - Consolidation Facility Sump Level Transmitter	Y	
LT-1-3-1 to LT-1-3-6 - ODC Containment Cell Extraction Well Level Transmitters	NA	Not within SOW
FE/FIT-1-1 - West Containment Cell Flow Transmitters	Y	
FE/FIT-1-2 - Consolidation Facility Flow Transmitters	Y	
FE/FIT-1-3-1 to FE/FIT-1-3-2 - ODC Containment Cell Flow Transmitters	Y	
3. Functional Requirements:	Function Provided Y/N	Notes
a. Monitor Levels (Low-Low Status, Low Status, High Status, High High Status, Level Feedback)	Y	Transmitter Feed back, Set Points on HMI
b. Monitor Flows (Totalalize, Flow Feedback)	Y	Function tested by changing the flow rate in each FIT. Flow matched mA reading
c. Monitor Pump Status (Remote Status, On Status, Fail Status, Run Command, Speed Command, Speed Feedback)	Y	
d. Provide remote manual start and stop pushbuttons on the HMI for running pumps manually. Provide an operator entry on the HMI for entering a manual speed command from 0 to 100 % for each variable speed pump.	Y	Toggled Switches all worked, Toggled through HMI screen manual and automatic modes
e. Provide remote manual/auto selector switch on the HMI for automatic operation of the pumps.	Y	
f. Provide an operator entry on the HMI for entering a low and high elevation level setpoint in feet for the west containment cell extraction wells. Additionally provide operator entries on the HMI WATER TREATMENT SYSTEM for entering a minimum flow setpoint in gpm, delay time setpoint in seconds, and dwell time setpoint in seconds for the pump.	NA	WCC uses contact probes Warrick level controllers
g. Provide an operator entry on the HMI for entering a low and high elevation level setpoint in feet for the consolidation facility sump.	Y	Pump start stop based on water elevation
h. Provide a level/differential selector switch on the HMI for each extraction well. Additionally provide an operator entry on the HMI for entering a well elevation level setpoint in feet and a cell differential level setpoint in feet for each extraction well. Provide separate PID controllers for maintaining a set well elevation level or differential level across the containment cell wall.	Y	Untested
i. Provide an operator entry on the HMI for entering a maximum system flow setpoint from 0 to 50 gpm for the treatment facility.	Y	Operator entry set points are provided on HMI. Flow setpoints are provided.
j. Provide an operator entry on the HMI for entering a manual position from 0 to 100 % for valve.	Y	Manual position set points for the valve are provided. Tested, valve reacts accurately for each set point entered.
k. Provide remote manual/auto selector switch on the HMI for automatic operation of each valve.	Y	Manual and auto switch provided for each valve

System Startup
Water Treatment System
Waukegan, Illinois

4. Manual Control Functions:		
a. The west containment cell pumps must be switched to remote mode at the local OOR hand switch in order for the HMI to have remote control and the remote manual/auto selector switch must be switched to manual. When the pump manual start pushbutton is pressed the pump will run continuously. When the pump manual stop pushbutton is pressed the pump will be disabled.	Y	Main Panel OOR Switches function tested
b. The consolidation facility pump must be switched to remote mode at the local OOR hand switch in order for the HMI to have remote control and the remote manual/auto selector switch must be switched to manual. When the pump manual start pushbutton is pressed the pump will run continuously. When the pump manual stop pushbutton is pressed the pump will be disabled.	Y	Main Panel OOR Switches function tested
c. The ODC Containment cell pumps must be switched to remote mode at the local OOR hand switch in order for the HMI to have remote control and the remote manual/auto selector switch must be switched to manual. When the pump manual start pushbutton is pressed the pump will run continuously at the manual speed command. When the pump manual stop pushbutton is pressed the pump will be disabled.	Y	Main Panel OOR Switches function tested
d. The valve must be switched to auto mode at manual/auto selector on the HMI. Enter a desired manual position and the valve will open to the entered position.	Y	Main Panel OOR Switches function tested
5. Auto Control Functions:		
a. The west containment cell pumps must be switched to remote mode at the local OOR hand switch in order for the HMI to have remote control and the remote manual/auto selector switch must be switched to auto. The pumps will switch on when the well elevation level is at or above the high level settings. The pumps will switch off when the well elevation level is at or below the low level settings.	Y	Function can not be tested as we are in a state of high level, low level will take weeks/months to achieve.
b. The consolidation facility pump must be switched to remote mode at the local OOR hand switch in order for the HMI to have remote control and the remote manual/auto selector switch must be switched to auto. The pump will switch on when the well elevation level is at or above the high level settings and the calculated maximum available flow is greater than the minimum flow setpoint. The pump will switch to cycle mode when the well elevation level is at or above the high level settings and the calculated maximum available flow is equal to or less than the minimum flow setpoint. When in cycle mode the pump will wait until the delay time has expired to turn the pump on and then run for the dwell time, repeating the sequence over and over. The pump will switch off when the well level is at or below the low level settings. Additional a PID controller will adjust the consolidation facility flow control valve to maintain the maximum available flow for the consolidation facility. The maximum available flow shall be calculated by subtracting the west containment cell flow and ODC Containment cell flows from the maximum system flow. the maximum system flows.	Y	Function Tested. All switch functions tested and HMI auto/manual control tested. Test simulated by entering setpoints into the HMI Pump Start and Pump Stop. Both high and low values were entered to insure pump automated start and stop. Cycle mod tested and delay time tested by manually entering a setpoint within the pump start/stop criteria. Pump shut off tested using manually entered set point criteria. Manual values were entered into the FCV-1-2. these were related to flow through FIT 1-2. Additionally, WCC flow was operated for a brief time and FCV-1-2 reacted to the Total System Flow Set Point. FCV-1-2 Closes when CF Sump Pump is in an off condition.
c. The ODC Containment cell pumps must be switched to remote mode at the local OOR hand switch in order for the HMI to have remote control and the remote manual/auto selector switch must be switched to auto. When the level/differential switch is set to level, a PID controller will adjust the pump speed to maintain an elevation level in the extraction well. When the level/differential switch is set to differential, a PID controller will adjust the pump speed to maintain a differential level across the containment cell wall.	Y	level is not controlled by elevation. Existing level control from existing system.

System Startup
Water Treatment System
Waukegan, Illinois

6. Alarms:		
a. Extraction Well Header Low Pressure: A low pressure condition indicates an extraction well pump failure or leak. If a Low pressure condition is detected shutdown the effected pair of pumps.	NA	NA Not in scope of work
b. Extraction Well Header No Flow: A no flow condition indicates an extraction well pump failure or leak. If a no flow condition is detected shutdown the effected pair of pumps.	Y	FALL indicates no flow and is shut down condition, set point is adjusted/adjustable in HMI. Manual ball valves were closed to reach FALL set point.
B. Loop 2 – Influent Pump Tank:		
1. General: The purpose of the influent pump tank is to provide minimal storage for extracted water from the containment cells. An influent pump will pump the liquid from the tank through the cartridge filter system and GAC Adsorption Systems for treatment and then to the north ditch.		
2. Equipment and Instruments:	Equipment Installed y/n	
T-2-1 - Influent Tank	Y	
P-1-2 - Influent Feed Pump	Y	
LE/LIT-2-1 - Influent Tank Level Transmitter	Y	
3. Functional Requirements:	Function Provided y/n	Notes
a. Monitor Influent Tank Level (Low-Low Status, Low Status, High Status, High-High Status, Level Feedback)	Y	Test simulated by filling and depleting tank. Range of the sensor is 0-38 inches. Set point are adjustable
b. Monitor Influent Pump Status (Remote Status, On Status, Fail Status, Run Command)	Y	Pump fail status tested by depressing motor overload on motor starter. Remote on, fail and run commands are included in HMI
c. Provide remote manual start and stop pushbuttons on the HMI for running influent pump manually.	Y	Main Panel OOR Switches
d. Provide remote manual/auto selector switch on the HMI for automatic operation of the influent pump.	Y	Remote manual/auto switches are included on HMI. Tested for operation.
e. Provide operator entries on the HMI for entering a minimum and maximum influent tank level from 0 to 6 ft.	Y	0-38 Inches was used. Set points for operator were included. Test simulated by entering in different setpoints.
4. Manual Control Functions:		
a. The influent pump must be switched to remote mode at the local OOR hand switch in order for the HMI to have remote control and the remote manual/auto selector switch must be switched to manual. When the pump manual start pushbutton is pressed the pump will run continuously. When the pump manual stop push button is pressed the pump will be disabled.	Y	Remote manual/auto switches are included on HMI. Tested for operation. When pump is switched to ON position pump will run continuously. When the pump is set to off the pump will not run. When the pump is set to Automatic the PLC controller has automated control of the pump.
5. Auto Control Functions:		
a. The influent pump must be switched to remote mode at the local OOR hand switch in order for the HMI to have remote control and the remote manual/auto selector switch must be switched to auto. The influent pump will switch on when the level is at or above the maximum influent tank level setting. The influent pump will switch off when the level is at or below the minimum influent tank level.	Y	Remote control of the influent pump was tested. The pump is controlled by the set points entered into the HMI. The pump is also automatically controlled by the Low and Low-low level alarm. Test simulated by cycling water through the influent tank and allowing water level to control the pump.
6. Interlocks:		
a. In the event of a sump high level alarm, if the influent pump is ON, the pump will be disabled.	Y	Tested, water level in the tank met the high-high alarm. The pump continued to operate.
b. In the event of an influent pump failure, if a pump is ON, the pump will be disabled.	Y	the overload on the motor starter was tripped, the pump was disabled.
c. In the event of power failure, if a pump is ON, the pump will be disabled.	Y	Power was disconnected the pump disabled.
d. In the event of a tank low-low level, if the influent pump is ON, the pump will be disabled.	Y	low-low tank level criteria were met, pump disabled

System Startup
Water Treatment System
Waukegan, Illinois

7. Alarms:		
a. Influent Tank Low-Low Level: A low-low level indicates the tank level is about to drop below the pump inlet. If a low-low level condition is detected perform a controlled system shutdown by disabling the influent pump.	Y	Low-Low level alarm will send out alarm
b. Influent Tank High-High Level: A high-high level indicates the tank is about to overflow. If a high-high level condition is detected perform a controlled system shutdown by disabling the containment cell and consolidation facility pumps.	Y	Influent high-high tank level results in a system shut down and alarm call out. This was simulated by filling the influent tank above the high-high level mark
C. Loop 3 – Liquid Cartridge Filter System:		
1. General: The purpose of the liquid cartridge filter system is to treat the extracted water from the containment cells and consolidation facility. The filter capacity is monitored for diminished performance.		
2. Equipment and Instruments:	Equipment Installed y/n	
DPIT-3-1 - Liquid Cartridge Filter System Differential Pressure Transmitters	Y	
3. Functional Requirements:	Function Provided y/n	
a. Monitor Differential Pressures (High-High Status, High Status, Differential Pressure Feedback)	Y	Differential pressure has only High and Low set points
b. Provide operator entries on the HMI for entering a high-high and high differential pressure from 0 to 30 psi, with a default setting of 20 psi.	Y	Differential pressure is expressed in INCHES of H2O. Span is 0-1000. High set point is 330 inches of H2O
4. Manual Control Functions: None.		
5. Auto Control Functions: None.		
6. Alarms:		
a. Liquid Cartridge Filter High-High Differential Pressure: A high differential pressure indicates a clogged liquid cartridge filters. If a high differential pressure condition is detected perform a controlled system shutdown by disabling the containment cell, consolidation facility, and influent pumps.	Y	Simulated high pressure alarm by closing the discharge valve and creating high pressure. High-high pressure condition was met. MODE FUNCTION SECTION states only High and LOW Settings. Contradiction in requirements. High level alarm set at 12 PSI or 340 Inches of H2O
D. Loop 4 – Liquid GAC Adsorption Systems:		
1. General: The purpose of the liquid GAC Adsorption Systems is to treat the extracted water from the containment cells and consolidation facility. The filter capacity is monitored for diminished performance.		
2. Equipment and Instruments:	Equipment Installed y/n	
DPIT-40-1 to DPIT-40-2 - Liquid GAC Adsorption Systems Differential Pressure Transmitters	Y	
3. Functional Requirements:	Function Provided y/n	
a. Monitor Differential Pressures (High-High Status, High Status, Differential Pressure Feedback)	Y	
b. Monitor Flow (Totalalize, Flow Feedback)	NA	NA
c. Provide operator entries on the HMI for entering a high-high and high differential pressure from 0 to 20 psi, with a default setting of 15 psi.	Y	Simulated high pressure alarm by closing the discharge valve to each vessel to reach high pressure alarm. Differential pressure is measured in Inches of H2O. High pressure condition was met. MODE FUNCTION SECTION states only High and Low settings. Contradiction in requirements. High level alarm set at 12 PSI or 340 Inches of H2O
d. Local manual hand ball valves shall be provided for backwashing of the liquid GAC Adsorption Systems. A separate potable source and pump is required for backwashing. During a manual backwash function the system must be shutdown.	Y	Local manual hand ball valves exist for backwash. A valve schedule for each scenario is provided.

System Startup
Water Treatment System
Waukegan, Illinois

4. Manual Control Functions: None.		
5. Auto Control Functions: None.		
6. Alarms:		
a. Liquid GAC Filter High Differential Pressure: A high differential pressure indicates a clogged liquid GAC Adsorption Systems. If a high differential pressure condition is detected perform a controlled system shutdown by disabling the containment cell, consolidation facility, and influent pumps.	Y	High differential pressure is set at 340 Inches of H2O. Test simulated by closing the discharge valve to each pressure vessel until high pressure alarm condition met.
E. Loop 5 – North Ditch:		
1. General: The purpose of this loop is to monitor the treated water discharge flow into the north ditch.		
2. Equipment and Instruments:	Equipment Installed y/n	
FE/FIT-5-1 - Treated Water Flow Transmitter	Y	
3. Functional Requirements:	Function Provided y/n	
a. Monitor Flow (Totalalize, Flow Feedback)	Y	
4. Manual Control Functions: None.		
5. Auto Control Functions: None.		
6. Alarms:		
a. Treated Water Flow Meter Failure: A flow meter failure condition indicates a problem with the flow meter. If a flow meter failure is detected perform a controlled system shutdown by disabling the containment cell, consolidation facility, and influent pumps.	Y	Test simulated by closing discharge valve downstream of the pump until low flow set point was met. Alarm condition occurred.
F. Loop 7 – Leak Detection:		
1. General: The purpose of this leak detection is to monitor the system for leaks.		
2. Equipment and Instruments:	Equipment Installed y/n	
LSH-7-1 - Building Sump High Level	Y	
3. Functional Requirements:	Function Provided y/n	
a. Monitor Sump Control Panel (High Level Status)	Y	
4. Manual Control Functions: None.		
5. Auto Control Functions: None.		
6. Alarms:		
a. Building Sump High Level Alarm: A high level alarm in the building sump indicates there is a leak in the building. If a high level condition is detected perform a controlled system shutdown by disabling the containment cell, consolidation facility, and influent pumps.	Y	Building sump High level alarm simulated by filling the building sump pit with water until the LSH-7-1 detected the water in the sump.
G. Loop 10 – Miscellaneous:		
1. General: The purpose of the miscellaneous section is monitor nonprocess loop related functions.		
2. Equipment and Instruments:	Equipment Installed y/n	
JSL-10-1 - Control Panel Loss of Power	Y	
ESL-10-1 - Control Panel UPS Alarm	Y	
ZSL-10-1 - Building Entry Door Closed	Y	

System Startup
Water Treatment System
Waukegan, Illinois

3. Functional Requirements:	Function Provided y/n	
a. Monitor Power (Loss of Power Status)	Y	Test simulated by shutting off breaker to Control panel
b. Monitor UPS (Common Alarm Status)	Y	Test simulated by shutting off breaker to Control panel
c. Monitor Building (Entry Door Status)	Y	Building alarm system exists.
d. Provide an operator entry on the HMI for entering an intrusion time delay set point from 0 to 60 seconds.	Y	Intrusion time delay exists. Manually entered setpoint
e. Provide an operator entry and button on the HMI for entering an alpha-numeric security code to disable the intrusion alarm.	Y	Operator entry button exists for entering an alpha-numeric security code
f. Provide an operator entry and button on the HMI for entering an new alpha-numeric security code to change the code to.	Y	Operator entry button exists.
g. Provide an operator button on the HMI for re-enabling the intrusion alarm.	Y	Operator entry button exists.
4. Manual Control Functions: None.		
5. Auto Control Functions: None.		
6. Alarms:		
a. Loss of Power: A loss of power condition indicates a utility power has been lost. If a loss of power condition is detected perform a controlled system shutdown by disabling the containment cell, consolidation facility, and influent pumps.	Y	Simulated alarm by disconnecting control panel power from main building breaker panel. All motors disabled. UPS power activated. UPS power provided backup to PLC control panel. UPS provided power for 68 minutes (for one UPS power supply. Second UPS was disconnected for test).
b. UPS Alarm: A UPS alarm is a common alarm indicating low battery, etcetera.	Y	UPS signal to PLC that power supply was going to shut down, and low power existed
c. Intrusion Alarm: A	Y	Simulated alarm by enabling alarm system and methodically opening each door. System reset after each door opened and alarm condition met.
Additional Misc. Control systems		
1. General: The purpose of the miscellaneous section is monitor nonprocess loop related functions.		
2. Equipment and Instruments:		
Building Heaters	Equipment Installed	Chromalox electric hanging forced air heaters
	Function Provided	Heaters are internally thermostatically controlled. Heaters tested by turning the units on and of.
Building Exhaust fans	Equipment Installed	Honeywell automated louvers, Leader Exhaust fan and thermostat.
	Function Provided	Provided at OOR switch on the Control panel. Thermostat to select interior ambient temperature. Test simulated by repositioning thermostat setting and system operated.
Building Sump pump	Equipment Installed	Goulds 2 inch cast iron sump pump and float switch
	Function Provided	in the event of pipe or equipment failure or leak, the building sump pump will switch on and transfer leaked water into the influent tank. Test simulated by filling the building sump with water.

WATER TREATMENT SYSTEM
WAUKEGAN HARBOR

INSTRUMENT CALIBRATION SHEET

CH2M HILL

INSTRUMENT CALIBRATION SHEET

Rev.06.05.92

COMPONENT	MANUFACTURER	PROJECT
Code:	Name: Siemens	Number: SC 916
Name: LE 2-1 Influent Tank	Model: Multiranger 100 Transmitter	Name: DMC-WH-WTS
	Serial #: PBDE5150040	

FUNCTIONS

	RANGE	VALUE	UNITS
Indicate? (Y) / N	Chart:		
Record? Y / N	Scale:	0-38	inches of water
Transmit/ Y	Input:	0-38	inches of water
Convert? (Y) / N	Output:	4-20mA	DC

COMPUTING FUNCTIONS? Y / N
Describe: Provides run/stop for Well pumps and Influent pumps

CONTROL? (Y) / N
Action? (direct) reverse
Modes? P / I / D
SWITCH? Y / (N)
Unit Range:
Differential: fixed/adjustable
Reset? automatic / manual

ANALOG CALIBRATIONS

REQUIRED			AS CALIBRATED			
			Increasing Input		Decreasing Input	
Input	Indicated	Output	Indicated	Output	Indicated	Output
12	12	9.05	12	9.05	12	9.05
16	16	10.74	16	10.73	16	10.73
9	9	7.78	9	7.85	9	7.76
10	10	8.21	10	8.21	10	8.19
24	24	14.1	24	14.13	24	14.10
26	26	14.94	26	14.97	26	14.97

CONTROL MODE SETTINGS: P: I: D:

DISCRETE CALIBRATIONS

Number	REQUIRED Trip Point (note rising or falling)	REQUIRED Reset Pt.	AS CALIBRATED Trip Point (note rising or falling)	AS CALIBRATED Reset Pt.	Note No.
1.					
2.					
3.	N/A				
4.					
5.					
6.					
7.					

#	NOTES:
	High/High not to be set over 26" or dead space of transmitter reads incorrectly

Component Calibrated and Ready for Startup
By: JDP
Date: 3/50/14
Tag No.: LE 2-1 LIT 2-1

.421

©COPYRIGHT 2014 CH2M HILL

WATER TREATMENT SYSTEM
WAUKEGAN HARBOR

INSTRUMENT CALIBRATION SHEET

CH2M HILL INSTRUMENT CALIBRATION SHEET Rev.06.05.92

COMPONENT	MANUFACTURER	PROJECT
Code:	Name: Endress + Hauser	Number: SC 916
Name: FIT 1-1 WCC	Model: Pro Mag 50	Name: DMC-WH-WTS
	Serial #: J600 7416000	

FUNCTIONS

	RANGE	VALUE	UNITS
Indicate? Y / N	Chart:		
Record? Y / N	Scale:	0-50	GPM
Transmit/ Convert? Y / N	Input:	0-50	GPM
	Output:	4-20	mA DC

COMPUTING FUNCTIONS? (Y) / N
Describe: West Containment Cell Flow Transmitter w/totalizing meter

CONTROL? (Y) / N
Action? direct / reverse
Modes? P / I / D

SWITCH? Y / N
Unit Range:
Differential: fixed/adjustable
Reset? automatic / manual

ANALOG CALIBRATIONS

REQUIRED			AS CALIBRATED			
Input	Indicated	Output	Increasing Input		Decreasing Input	
			Indicated	Output	Indicated	Output
0						
10						
20						

CONTROL MODE SETTINGS: P: I: D:

DISCRETE CALIBRATIONS

REQUIRED			AS CALIBRATED		Note No.
Number	Trip Point (note rising or falling)	Reset Pt.	Trip Point (note rising or falling)	Reset Pt.	
1.					
2.					
3.					
4.					
5.					
6.					
7.					

#	NOTES:
	- Did not run wells

Component Calibrated and Ready for Startup
By: JDP
Date: 7/30/14
Tag No.:

©COPYRIGHT 2014 CH2M HILL

WATER TREATMENT SYSTEM
WAUKEGAN HARBOR

INSTRUMENT CALIBRATION SHEET

CH2M HILL INSTRUMENT CALIBRATION SHEET Rev.06.05.92

COMPONENT	MANUFACTURER	PROJECT
Code:	Name: Endress Hauser	Number: SL-916
Name: CF FIT 1-2	Model: 50P40-EL0A1AA0BBAA	Name: BMC-WH-WTS
	Serial #: J6007816000	

FUNCTIONS

	RANGE	VALUE	UNITS	COMPUTING FUNCTIONS? Y / N	CONTROL? Y / N
Indicate? Y / N	Chart:	reranged 0-75	gpm	Describe: CF FIT 1-2	Action? direct / reverse
Record? Y / N	Scale:	0-50	gpm	Flow Transmitter / Totalizer	Modes? P / I / D
Transmit/ Convert? Y / N	Input:	0-50	gpm		SWITCH? Y / N
	Output:	4-20	mA		Unit Range:
					Differential: fixed/adjustable
					Reset? automatic / manual

ANALOG CALIBRATIONS

REQUIRED			AS CALIBRATED			
Input	Indicated	Output	Increasing Input		Decreasing Input	
			Indicated	Output	Indicated	Output
0	0	4	0	4.01	0	4.01
25	25	12	25.3	12.08	25	11.98
40	40	16.8	40	16.76	39.5	16.62
25	25	9.33	25.03	9.4		
45	45	13.6	44.25	13.44		
CONTROL MODE SETTINGS:			P:	I:	D:	

DISCRETE CALIBRATIONS

Number	REQUIRED Trip Point (note rising or falling)	REQUIRED Reset Pt.	AS CALIBRATED Trip Point (note rising or falling)	AS CALIBRATED Reset Pt.	Note No.
1.					
2.					
3.					
4.					
5.					
6.					
7.					

#	NOTES:
	Controls FCV-1-2 Valve Closes when Pump is off
	• After Inspecting we reranged FIT to 0-75

Component Calibrated and Ready for Startup
By: JDP
Date: 7/30/14
Tag No.:

0.32 mA/gpm

©COPYRIGHT 2014 CH2M HILL

WATER TREATMENT SYSTEM
WAUKEGAN HARBOR

INSTRUMENT CALIBRATION SHEET

CH2M HILL INSTRUMENT CALIBRATION SHEET Rev.06.05.92

COMPONENT	MANUFACTURER	PROJECT
Code:	Name: Endress Hauser	Number: SC-916
Name: FIT-1-3-1	Model: 50P40-5L0A1AA0BAA	Name: OW-WH-WTS
	Serial #:	

FUNCTIONS

	RANGE	VALUE	UNITS	COMPUTING FUNCTIONS? Y / N	CONTROL? Y / N
Indicate? Y / N	Chart:			Describe: ODC Well EW-1	Action? direct / reverse Modes? P / I / D
Record? Y / N	Scale:				SWITCH? Y / N Unit Range:
Transmit/ Convert? Y / N	Input:				Differential: fixed/adjustable
	Output:				Reset? automatic / manual

ANALOG CALIBRATIONS							DISCRETE CALIBRATIONS					Note No.
REQUIRED			AS CALIBRATED				REQUIRED			AS CALIBRATED		
Input	Indicated	Output	Increasing Input		Decreasing Input		Number	Trip Point	Reset Pt.	Trip Point	Reset Pt.	
			Indicated	Output	Indicated	Output		(note rising or falling)		(note rising or falling)		
							1.					
							2.					
							3.					
							4.					
							5.					
							6.					
CONTROL MODE SETTINGS:			P:	I:	D:		7.					

#	NOTES:	Component Calibrated and Ready for Startup
		By:
		Date:
		Tag No.:

©COPYRIGHT 2014 CH2M HILL

INSTRUMENT CALIBRATION SHEET

CH2M HILL INSTRUMENT CALIBRATION SHEET Rev.06.05.92

COMPONENT	MANUFACTURER	PROJECT
Code:	Name: Endress Hauser	Number:
Name: FIT-1-3-2	Model: 50P40-ELDP0BRAA	Name:
	Serial #:	

FUNCTIONS

	RANGE	VALUE	UNITS	COMPUTING FUNCTIONS? Y / N	CONTROL? Y / N
Indicate? Y / N	Chart:			Describe: ODC EW-2	Action? direct / reverse Modes? P / I / D
Record? Y / N	Scale:				SWITCH? Y / N Unit Range:
Transmit/ Convert? Y / N	Input:				Differential: fixed/adjustable
	Output:				Reset? automatic / manual

ANALOG CALIBRATIONS

REQUIRED			AS CALIBRATED			
Input	Indicated	Output	Increasing Input		Decreasing Input	
			Indicated	Output	Indicated	Output
CONTROL MODE SETTINGS:			P:	I:	D:	

DISCRETE CALIBRATIONS

REQUIRED			AS CALIBRATED		Note No.
Number	Trip Point (note rising or falling)	Reset Pt.	Trip Point (note rising or falling)	Reset Pt.	
1.					
2.					
3.					
4.					
5.					
6.					
7.					

#	NOTES:	Component Calibrated and Ready for Startup
		By:
		Date:
		Tag No.:

©COPYRIGHT 2014 CH2M HILL

WATER TREATMENT SYSTEM
WAUKEGAN HARBOR

INSTRUMENT CALIBRATION SHEET

CH2M HILL INSTRUMENT CALIBRATION SHEET Rev.06.05.92

COMPONENT	MANUFACTURER	PROJECT
Code:	Name: Endress Hauser	Number: SC-916
Name: FIT S-1	Model: 50P40-EL0A1AA0BBAA	Name: OMC-WH-WTS
	Serial #: J6007K6100	

FUNCTIONS

	RANGE	VALUE	UNITS	COMPUTING FUNCTIONS? Y / N	CONTROL? Y / N
Indicate? Y / N	Chart:			Describe: FIT S-1 Effluent	Action? direct / reverse
Record? Y / N	Scale:	0-50	gpm	Flow Transmitter/Totalizer	Modes? P / I / D
Transmit/ Convert? Y / N	Input:	0-50	gpm		SWITCH? Y / N
	Output:	4-20	mA		Unit Range:
					Differential: fixed/adjustable
					Reset? automatic / manual

ANALOG CALIBRATIONS

REQUIRED			AS CALIBRATED			
Input	Indicated	Output	Increasing Input		Decreasing Input	
			Indicated	Output	Indicated	Output
0	0	4	0	4.002	0	4.002
25	25	12	24.40	11.60	26.6	12.51
40	40	16.8	39.7	16.7	42.4	17.46
25		9.33	25.2	9.38		
45		13.6	44.33	13.46		
CONTROL MODE SETTINGS:			P:	I:	D:	

DISCRETE CALIBRATIONS

REQUIRED			AS CALIBRATED		Note No.
Number	Trip Point (note rising or falling)	Reset Pt.	Trip Point (note rising or falling)	Reset Pt.	
1.					
2.					
3.					
4.					
5.					
6.					
7.					

#	NOTES:
	Leak Detection Low Low Alarm - or Pipe Break/fail

Component Calibrated and Ready for Startup
By: JDP
Date: 7/30/14
Tag No.:

©COPYRIGHT 2014 CH2M HILL

INSTRUMENT CALIBRATION SHEET

CH2M HILL INSTRUMENT CALIBRATION SHEET Rev.06.05.92

COMPONENT	MANUFACTURER	PROJECT
Code:	Name: Spears	Number: SL-9130
Name: FCV-1-2 CF Control Valve	Model: 2/2 01A 1239-015A	Name: OMB - WH - WTS
	Serial #: 12498H	

FUNCTIONS

	RANGE	VALUE	UNITS	COMPUTING FUNCTIONS? Y / N	CONTROL? Y / N
Indicate? Y / N	Chart:			Describe: CF Flow Control	Action? direct / reverse
Record? Y / N	Scale:	0-100	%	controls flow of Influent water	Modes? P / I / D
Transmit/	Input:	0-100	%	compared to	SWITCH? Y / N
Convert? Y / N	Output:	4-20 ma	mADC		Unit Range:
					Differential: fixed/adjustable
					Reset? automatic / manual

ANALOG CALIBRATIONS

REQUIRED			AS CALIBRATED				
Input	Indicated	Output	Increasing Input		Decreasing Input		Note No.
			Indicated	Output	Indicated	Output	
24%	24%	7.84	24.4%	7.91	~~24.8~~ 24.6	~~15.98~~ 7.94	
40%	40%	10.4	39.9	10.39	39.4	10.3	
75%	75%	16	74.37	15.9	74.88	15.98	

CONTROL MODE SETTINGS: P: I: D:

DISCRETE CALIBRATIONS

REQUIRED			AS CALIBRATED		
Number	Trip Point (note rising or falling)	Reset Pt.	Trip Point (note rising or falling)	Reset Pt.	Note No.
1.					
2.					
3.					
4.					
5.					
6.					
7.					

#	NOTES:
	Input and out put signals match

Component Calibrated and Ready for Startup
By: JDP
Date: 7/30/14
Tag No.: FCV 1-2

©COPYRIGHT 2014 CH2M HILL

WATER TREATMENT SYSTEM
WAUKEGAN HARBOR

INSTRUMENT CALIBRATION SHEET

CH2M HILL INSTRUMENT CALIBRATION SHEET Rev.06.05.92

COMPONENT	MANUFACTURER	PROJECT
Code:	Name: Rosemount	Number: SC-916
Name: DPIT-3-1	Model: 3051CD3A02A1AM4D455	Name: OMC-WH-WTS
	Serial #: 2590789	

FUNCTIONS

	RANGE	VALUE	UNITS	COMPUTING FUNCTIONS? Y / N	CONTROL? Y / N
Indicate? Y / N	Chart:	0-36.14	psi	Describe: Filter ΔP	Action? direct / reverse Modes? P / I / D
Record? Y / N	Scale:	0-1000	"wc		SWITCH? Y / N Unit Range:
Transmit/ Convert? Y / N	Input:	0-1000	"wc		Differential: fixed/adjustable
	Output:	4-20	mADC		Reset? automatic / manual

ANALOG CALIBRATIONS

REQUIRED			AS CALIBRATED				
Input	Indicated	Output	Increasing Input		Decreasing Input		
			Indicated	Output	Indicated	Output	
0		4	0.1	4.004			
200		7.2	[illegible]	7.17	215	7.42	
600		13.6	605	13.87	593	13.46	
700		20	[illegible]	16.35	723	15.55	
CONTROL MODE SETTINGS:			P:	I:	D:		

DISCRETE CALIBRATIONS

REQUIRED			AS CALIBRATED		Note No.
Number	Trip Point (note rising or falling)	Reset Pt.	Trip Point (note rising or falling)	Reset Pt.	
1.					
2.					
3.					
4.					
5.					
6.					
7.					

#	NOTES:
	Simulated Alarm by closing Discharge Valve ~ Alarm High
	Changed units to psi

Component Calibrated and Ready for Startup
By: JDP
Date: 7/30/14
Tag No.:

0.016 mA/"wc

©COPYRIGHT 2014 CH2M HILL

WATER TREATMENT SYSTEM
WAUKEGAN HARBOR

INSTRUMENT CALIBRATION SHEET

CH2M HILL

INSTRUMENT CALIBRATION SHEET

Rev.06.05.92

COMPONENT	MANUFACTURER	PROJECT
Code:	Name: Rosemount	Number: SL-916
Name: DPIT 4-1	Model: 3051CD3A02A1M4D4S5	Name: OMC-WH-WTS
	Serial #: 2590787	

FUNCTIONS

	RANGE	VALUE	UNITS	COMPUTING FUNCTIONS? Y / N	CONTROL? Y / N
Indicate? Y / N	Chart:	0-36.14	psi	Describe: CARBON #1 ΔP	Action? direct / reverse
Record? Y / N	Scale:	0-1000"	"WC		Modes? P / I / D
Transmit/ Convert? Y / N	Input:	0-1000	"WC		SWITCH? Y / N
	Output:	4-20	mADC		Unit Range:
					Differential: fixed/adjustable
					Reset? automatic / manual

ANALOG CALIBRATIONS

REQUIRED			AS CALIBRATED			
Input	Indicated	Output	Increasing Input		Decreasing Input	
			Indicated	Output	Indicated	Output
0		4				
200		7.2	195	7.15	202	7.17
600		13.6	600	13.76	626	14.03
700		15.2	700	15.21	707	15.26
CONTROL MODE SETTINGS:			P:	I:	D:	

DISCRETE CALIBRATIONS

REQUIRED			AS CALIBRATED		Note No.
Number	Trip Point (note rising or falling)	Reset Pt.	Trip Point (note rising or falling)	Reset Pt.	
1.					
2.					
3.					
4.					
5.					
6.					
7.					

#	NOTES:
	Alarm - High only - simulated by Closing Discharge Valve
	Changed units to psi

Component Calibrated and Ready for Startup

By: JDP

Date: 7/30/14

Tag No.:

MKE/424337
FEBRUARY 25, 2014
©COPYRIGHT 2014 CH2M HILL

INSTRUMENTATION AND CONTROL
FOR PROCESS SYSTEMS
40 90 01 SUPPLEMENT 4 - 1

WATER TREATMENT SYSTEM
WAUKEGAN HARBOR

INSTRUMENT CALIBRATION SHEET

CH2M HILL

INSTRUMENT CALIBRATION SHEET

Rev.06.05.92

COMPONENT	MANUFACTURER	PROJECT
Code:	Name: Rosemount	Number: SC-916
Name: DPIT 4-2	Model: 3051CD3A02A1M4 D455	Name: DMC-WH-WTS
	Serial #: 2990788	

FUNCTIONS

	RANGE	VALUE	UNITS	COMPUTING FUNCTIONS? Y / N	CONTROL? Y / N
Indicate? Y / N	Chart:	0-36.14	psi	Describe: CARBON #2 ΔP	Action? direct / reverse
Record? Y / N	Scale:	0-600	"WC		Modes? P / I / D
Transmit/ Convert? Y / N	Input:	0-600	"WC		SWITCH? Y / N
	Output:	4-20	mA DC		Unit Range:
					Differential: fixed/adjustable
					Reset? automatic / manual

ANALOG CALIBRATIONS

REQUIRED			AS CALIBRATED			
Input	Indicated	Output	Increasing Input		Decreasing Input	
			Indicated	Output	Indicated	Output
0		4				
200		7.2	202	7.25	205	7.31
600		13.6	612	13.8	614	8.1
700		20	695	15.12	699	15.18

CONTROL MODE SETTINGS: P: I: D:

DISCRETE CALIBRATIONS

Number	REQUIRED Trip Point (note rising or falling)	REQUIRED Reset Pt.	AS CALIBRATED Trip Point (note rising or falling)	AS CALIBRATED Reset Pt.	Note No.
1.					
2.					
3.					
4.					
5.					
6.					
7.					

#	NOTES:
	Changed units to psi

Component Calibrated and Ready for Startup
By: JDP
Date: 7/30/14
Tag No.:

©COPYRIGHT 2014 CH2M HILL

WATER TREATMENT SYSTEM
WAUKEGAN HARBOR

INSTRUMENT CALIBRATION SHEET

CH2M HILL

INSTRUMENT CALIBRATION SHEET

Rev.06.05.92

COMPONENT	MANUFACTURER	PROJECT
Code:	Name: Floor Sump	Number: SC-916
Name: LSH 7-1 Floor Sump H	Model: H2K	Name: OMC-WH-WTS
	Serial #: –	

FUNCTIONS

	RANGE	VALUE	UNITS
Indicate? Y / N	Chart:		
Record? Y / N	Scale:		
Transmit/ Convert? Y / N	Input:		
	Output:		

COMPUTING FUNCTIONS? Y (N)
Describe: Floor sump shut Down
High - High - system shut Down

CONTROL? (Y) / N
Action? (direct) / reverse
Modes? P / I / D

SWITCH? (Y) / N
Unit Range: 5"
Differential: (fixed) / adjustable
Reset? automatic / (manual)

ANALOG CALIBRATIONS

REQUIRED			AS CALIBRATED			
Input	Indicated	Output	Increasing Input		Decreasing Input	
			Indicated	Output	Indicated	Output
	N/A					
CONTROL MODE SETTINGS:			P:	I:	D:	

DISCRETE CALIBRATIONS

Number	REQUIRED Trip Point (note rising or falling)	REQUIRED Reset Pt.	AS CALIBRATED Trip Point (note rising or falling)	AS CALIBRATED Reset Pt.	Note No.
1.	Rise 5"	fall	Rise 5"		
2.					
3.					
4.					
5.					
6.					
7.					

#	NOTES:

Component Calibrated and Ready for Startup
By: VDP
Date: 7/30/14
Tag No.: LSH 7-1

©COPYRIGHT 2014 CH2M HILL

WATER TREATMENT SYSTEM
WAUKEGAN HARBOR

INSTRUMENT CALIBRATION SHEET

CH2M HILL INSTRUMENT CALIBRATION SHEET Rev.06.05.92

COMPONENT	MANUFACTURER	PROJECT
Code:	Name:	Number: SC-916
Name: Level switch on-off P-7-1 Building Sump	Model:	Name: OMC-WH - WTS
	Serial #:	

FUNCTIONS

	RANGE	VALUE	UNITS	COMPUTING FUNCTIONS? Y / N	CONTROL? Y / N
Indicate? Y / N	Chart:			Describe: Turns sump pump on/off -	Action? direct / reverse
Record? Y / N	Scale:				Modes? P / I / D
Transmit/ Convert? Y / N	Input:				SWITCH? Y / N
	Output:				Unit Range: Single point
					Differential: N/A fixed/adjustable
					Reset? automatic / manual

ANALOG CALIBRATIONS

REQUIRED			AS CALIBRATED			
Input	Indicated	Output	Increasing Input		Decreasing Input	
			Indicated	Output	Indicated	Output
CONTROL MODE SETTINGS:			P:	I:	D:	

N/A

DISCRETE CALIBRATIONS

REQUIRED			AS CALIBRATED		Note No.
Number	Trip Point (note rising or falling)	Reset Pt.	Trip Point (note rising or falling)	Reset Pt.	
1.	rise 4.5"	fall 3"	rise 4.5"	fall 3"	
2.					
3.					
4.					
5.					
6.					
7.					

#	NOTES:

Component Calibrated and Ready for Startup
By: JDP
Date: 7/30/14
Tag No.: P-7-1 on/off

©COPYRIGHT 2014 CH2M HILL

WATER TREATMENT SYSTEM
WAUKEGAN HARBOR

INSTRUMENT CALIBRATION SHEET

CH2M HILL INSTRUMENT CALIBRATION SHEET

Columbus Electric Thermostate model #1A22-7

Rev.06.05.92

COMPONENT	MANUFACTURER	PROJECT
Code:	Name: Honeywell / Leader Fan /	Number: SL 916
Name: Building Exhaust Fan system	Model: (MS7104F 1210x3) P14-2	Name: OMC-WH-WTS
	Serial #: 1426M00381/1426M00378/1426M00383	

FUNCTIONS

	RANGE	VALUE	UNITS
Indicate? Y / N	Chart:		
Record? Y / N	Scale:		
Transmit/ Convert? Y / N	Input:		
	Output:		

COMPUTING FUNCTIONS? Y / N
Describe: thermostate controled motor controled exhaust fan and Louver

CONTROL? (Y) / N
Action? (direct) / reverse
Modes? P / I / D

SWITCH? (Y) / N
Unit Range: 130° - 80°
Differential: fixed/(adjustable)
Reset? (automatic) / manual

ANALOG CALIBRATIONS

REQUIRED			AS CALIBRATED			
Input	Indicated	Output	Increasing Input		Decreasing Input	
			Indicated	Output	Indicated	Output
	N/A					

CONTROL MODE SETTINGS: P: I: D:

DISCRETE CALIBRATIONS

REQUIRED			AS CALIBRATED		Note No.
Number	Trip Point (note rising or falling)	Reset Pt.	Trip Point (note rising or falling)	Reset Pt.	
1.	Variable	Variable	SA	SA	
2.					
3.					
4.					
5.					
6.					
7.					

#	NOTES:
	tested by turning thermostate below Ambient temp
	system tested OK

Component Calibrated and Ready for Startup
By: JDP
Date: 2/30/14
Tag No.:

©COPYRIGHT 2014 CH2M HILL

WATER TREATMENT SYSTEM
WAUKEGAN HARBOR

INSTRUMENT CALIBRATION SHEET

CH2M HILL INSTRUMENT CALIBRATION SHEET

Rev.06.05.92

COMPONENT	MANUFACTURER	PROJECT
Code:	Name: Chromalox XZ	Number: SC-916
Name: Building Heaters	Model: LUHD0221340O	Name: OMC-WH-WTS
	Serial #: 105304-1 / 1005304-1	

FUNCTIONS

	RANGE	VALUE	UNITS
Indicate? Y / N	Chart:		
Record? Y / N	Scale:		
Transmit/ Convert? Y / N	Input:		
	Output:		

COMPUTING FUNCTIONS? Y / N
Describe: Building Heat thermostate control

CONTROL? (Y) / N
Action? (direct) / reverse
Modes? P / I / D

SWITCH? (Y) / N
Unit Range: LO - HI
Differential: fixed/(adjustable)
Reset? (automatic) / manual

ANALOG CALIBRATIONS

REQUIRED			AS CALIBRATED			
Input	Indicated	Output	Increasing Input		Decreasing Input	
			Indicated	Output	Indicated	Output

CONTROL MODE SETTINGS: P: I: D:

DISCRETE CALIBRATIONS

REQUIRED			AS CALIBRATED		Note No.
Number	Trip Point (note rising or falling)	Reset Pt.	Trip Point (note rising or falling)	Reset Pt.	
1.	LO	HI			
2.					
3.					
4.					
5.					
6.					
7.					

#	NOTES: New thermostats will be installed in East Heater

Component Calibrated and Ready for Startup
By: JDP
Date: 7/30/14
Tag No.:

©COPYRIGHT 2014 CH2M HILL

WATER TREATMENT SYSTEM
WAUKEGAN HARBOR

INSTRUMENT CALIBRATION SHEET

CH2M HILL INSTRUMENT CALIBRATION SHEET Rev.06.05.92

COMPONENT	MANUFACTURER	PROJECT
Code:	Name: Sentrol Industrial Guardian	Number: 3C-916
Name: Intrusion Alarm System	Model: Guardian Switch	Name: OMC-WH-WTS
	Serial #: 151 6Z ~~OK~~ OK	

FUNCTIONS

	RANGE	VALUE	UNITS	COMPUTING FUNCTIONS? Y / N	CONTROL? Y / N
Indicate? Y / N	Chart:			Describe: Alarm system for treatment	Action? direct / reverse
Record? Y / N	Scale:	~~open~~		Building Alarm switch on	Modes? P / I / D
Transmit/	Input:			3 Doors	SWITCH? (Y) / N
Convert? Y / N	Output:				Unit Range: open/closed
					Differential: (fixed/adjustable)
					Reset? automatic (manual)

ANALOG CALIBRATIONS

REQUIRED			AS CALIBRATED			
Input	Indicated	Output	Increasing Input		Decreasing Input	
			Indicated	Output	Indicated	Output
Door #1	Closed	Alarm set - open	Door	Alarm	Indicated	
Door #2	Closed	Alarm set - open	Door	Alarm	Indicated	
Door #3	Closed	Alarm set - open	Door	Alarm	Indicated	
CONTROL MODE SETTINGS:			P:	I:	D:	

DISCRETE CALIBRATIONS

REQUIRED			AS CALIBRATED		Note No.
Number	Trip Point (note rising or falling)	Reset Pt.	Trip Point (note rising or falling)	Reset Pt.	
1.					
2.					
3.					
4.					
5.					
6.					
7.					

#	NOTES:
	System OK

Component Calibrated and Ready for Startup
By: JDP
Date: 7/30/14
Tag No.:

©COPYRIGHT 2014 CH2M HILL

Appendix F
Consolidation Facility Sump Pump Operations and Maintenance

OPERATIONS AND MAINTENANCE PLAN
REMEDIAL CONSTRUCTION ACTIVITIES
WATER TREATMENT SYSTEM
WAUKEGAN, ILLINOIS

CF Sump Pump O&M

LETTER OF TRANSMITTAL

EPG COMPANIES INC.
PH. 763-424-2613 FAX 763-493-4812

CORPORATE OFFICES
19900 CTY. RD. 81
MAPLE GROVE, MN 55311

MAILING ADDRESS
P.O. BOX 427
ROGERS, MN 55374

DATE 6-20-14

JOB NO. 14-11577

ATTENTION Clayton Nystrom

RE: Waukegan Water Treatment System

TO Arrowhead Contracting, Inc.
100 Seahorse Drive
Waukegan, IL 60085

WE ARE SENDING YOU ☑ ATTACHED ☐ UNDER SEPARATE COVER VIA _____ THE FOLLOWING ITEMS:

☐ SHOP DRAWINGS ☐ PRINTS ☐ COPY OF LETTER ☐ SAMPLES ☐ SPECIFICATIONS
☐ CHANGE ORDER ☐ PLANS ☑ O & M Manual

COPIES	DATE	NO.	DESCRIPTION
1	6-20-14		Operation & Maintenance Manual

REASON FOR TRANSMITTAL CHECKED BELOW:

☐ FOR APPROVAL ☐ APPROVED AS SUBMITTED ☐ RESUBMIT _____ COPIES FOR APPROVAL
☑ FOR YOUR USE ☐ RETURNED FOR CORRECTIONS ☐ SUBMIT _____ COPIES FOR DISTRIBUTION
☐ AS REQUESTED ☐ FOR REVIEW AND COMMENT ☐ RETURN _____ CORRECTED PRINTS
☐ APPROVED AS NOTED ☐ _____
☐ FOR BIDS DUE _____ ☐ PRINTS RETURNED AFTER LOAN TO US

REMARKS

Ron Clasen 763-463-9833
Need Start Franklin# 282 301 8110 238.00

COPY TO _____ SIGNED: _____

PLEASE NOTIFY US AT ONCE IF ENCLOSURES ARE NOT AS NOTED.

240034

EPG Companies Inc.

Operations & Maintenance Manual

FOR

Arrowhead Contracting, Inc. Waukegan Water Treatment System

EPG Job #14-11577

EPG Companies Inc.

Operations and Maintenance Index

Arrowhead Contracting, Inc. – Waukegan Water Treatment System

EPG Job # 14-11577

Bulletin	1055	List of Equipment
Drawing	05775-0000	Series 12 SurePump™
Drawing	05775-0010	Series 12 Size 5 Sump Drainer
Bulletin	0335g	Engineer's Specification EPG WSDPT SurePump™ Wheeled Sump Drainer for side slope riser installations with built-in level sensor
Bulletin	0480f	Materials of Construction
Bulletin	0130c	EPG Sump Drainer Vent Tube / Check Valve Installation Instructions
Bulletin	0680a	EPG SurePump™ with LevelMaster™ Level Sensor Disassembly / Assembly Operation & Maintenance Instructions
Bulletin	0691a	EPG SurePump™ with LevelMaster™ Level Sensor Replacement Instructions for Level Sensor in Wheeled Sump Drainer
Bulletin	3360	Caution
Bulletin	0123	Engineer's Specification EPG LevelMaster™ LT Submersible Level Sensor
Bulletin	0690c	EPG LevelMaster™ Level Sensor Operation & Maintenance Instructions
Bulletin	0790	Test Equipment
Drawing	01774-0000	Vent Tube Assembly
Bulletin	0780a	Troubleshooting Guide
Bulletin	6090a	Wire Cable Clamp Installation Instructions
Bulletin	0370a	Storage Information
Bulletin	0380d	SurePump™ Installation Record
Bulletin	0202	SurePump Warranty Requirements
Form	200	SurePump™ Installation Record
Bulletin	0610a	Installation Guide EPG SurePump™ Pumping System
Bulletin	0620b	Start Up Checklist EPG SurePump™ Pumping System
Bulletin	0285d	Model NW Stainless Steel Discharge Adapter for Leachate, Monitoring, and Remediation Piping Applications
Bulletin	0291c	Installation Instructions – NW Disconnect for Leachate, Monitoring, and Remediation Pumping Applications
Drawing	02523-0605	BJBL600B Breakout Junction Box for Level Sensor
Drawing	03626-0500	BJBP500 Breakout Junction Box for Motor Lead
Bulletin	0200d	Limited Warranty

© EPG Companies Inc. 2014

EPG Companies Inc.

List of Equipment

Arrowhead Contracting, Inc. – Waukegan Water Treatment System

EPG Job # 14-11577

1 each WSDPT 12-3
EPG SurePump, patented, stainless steel Wheeled Sump Drainer, size 5, with 2 HP, 230 V, 1Ø motor, 60'of jacketed 14-4 CP motor lead, 0-11' level sensor ith built-in lightning arrestor and 60' Hytrel lead, and 60' of 3/16" stainless steel suspension cable and clamps.

1 each NW2SS
EPG Discharge Adapter, 2" cast 316SS disconnect.

1 each BJBL600B
EPG Breakout Box, NEMA 4X non-metallic enclosure, junction box for 1 ea. level sensor. Includes desiccant dryer, bellows, and connection terminals.

1 each BJBP500
EPG Breakout Box, NEMA 4X non-metallic enclosure for 1 ea. motor lead, with connection terminals.

© EPG Companies Inc. 2014

SERIES 12 SurePump™

Flow Range 35-75 GPM

60 Hz

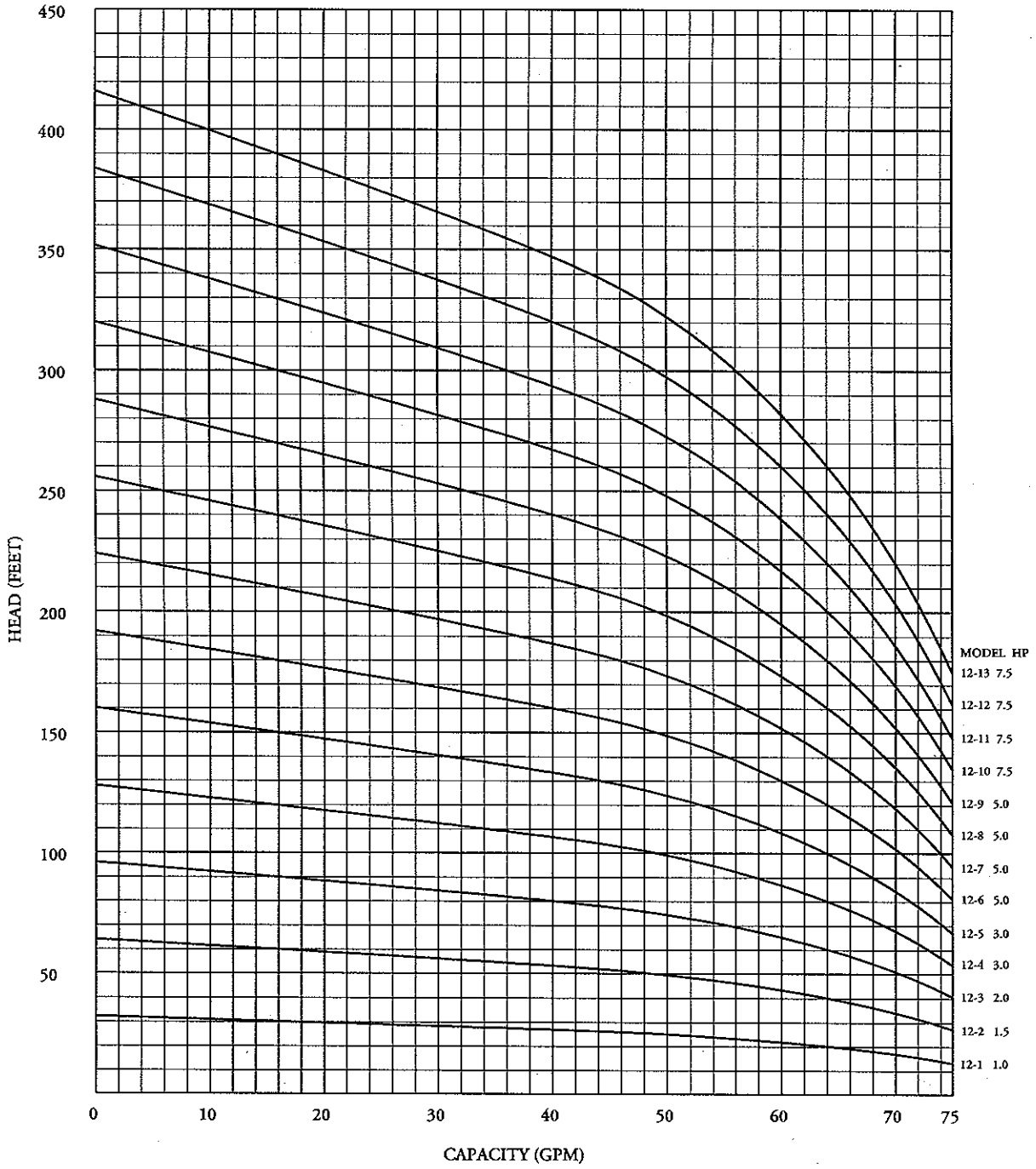

DATA SUBJECT TO CHANGE WITHOUT NOTICE

© 2014 EPG Companies Inc.
SurePump is a Reg. TM of EPG Companies Inc.

SERIES 12 SIZE 5 WHEELED SUMP DRAINER

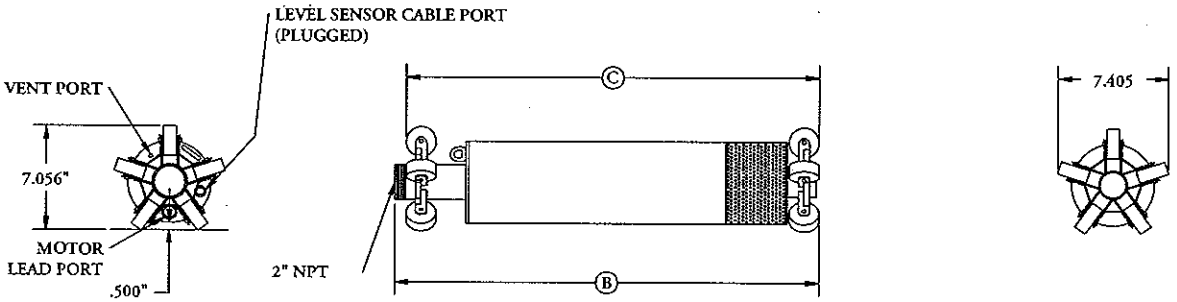

WSD

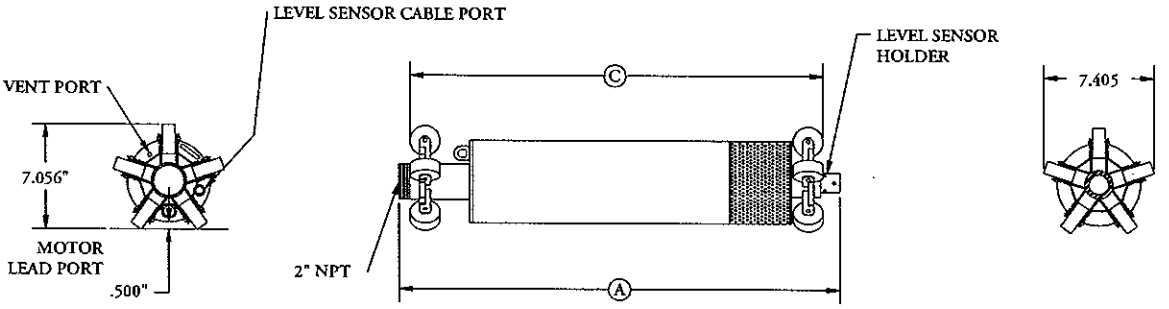

WSDPT

MODEL	HP	PHASE	A	B	C	*APPROX. SHIPPING WEIGHT	
						WSD	WSDPT
12-1	1.00	1	36.01	34.89	34.14	77.26	82.26
12-1	1.00	3	36.01	34.89	34.14	77.26	82.26
12-2	1.50	1	40.48	39.36	38.61	87.64	92.64
12-2	1.50	3	38.61	37.49	36.74	80.80	85.80
12-3	2.00	1	44.58	43.46	42.71	95.65	100.65
12-3	2.00	3	43.08	41.96	41.21	91.18	96.18
12-4	3.00	1	55.68	54.56	53.81	130.52	135.52
12-4	3.00	3	52.68	51.56	50.81	116.58	121.58
12-5	3.00	1	58.28	57.16	56.41	149.06	154.06
12-5	3.00	3	55.28	54.16	53.41	131.12	136.12
12-6	5.00	1	66.88	65.76	65.01	158.48	163.48
12-6	5.00	3	60.88	59.76	59.01	137.61	142.61

MODEL	HP	PHASE	A	B	C	*APPROX. SHIPPING WEIGHT	
						WSD	WSDPT
12-7	5.00	1	69.48	68.36	67.61	162.03	167.03
12-7	5.00	3	63.48	62.36	61.61	141.15	146.15
12-8	5.00	1	72.08	70.96	70.21	165.57	170.57
12-8	5.00	3	66.08	64.96	64.21	144.70	149.70
12-9	5.00	1	74.68	73.56	72.81	169.12	174.12
12-9	5.00	3	68.68	67.56	66.81	148.24	153.24

NOTE: ALL DIMENSIONS ARE IN INCHES.

*SHIPPING WEIGHT INCLUDES
WSD: CRATE, 50' OF 12-4 MOTOR LEAD, 50' OF 3/16" SS CABLE.
WSDPT: CRATE, 50' OF 12-4 MOTOR LEAD, 50' OF 3/16" SS CABLE,
LEVEL SENSOR AND CABLE.

© 2014 EPG Companies Inc.
SurePump is a Reg. TM of EPG Companies Inc.

EPG Companies Inc.

January 2002

ENGINEER'S SPECIFICATION

EPG WSDPT SurePump™ Wheeled Sump Drainer

for side slope riser installations
with built-in level sensor

Furnish __1__ centrifugal submersible EPG WSDPT SurePump Wheeled Sump Drainer(s) (U.S. patented), Model WSDPT __12__ - __3__ with __3__ impeller stages. Each unit shall be suitable for side slope riser installation. Each unit shall be equipped with a __2__ HP, submersible electric motor for operation on __230__ Volts, __1__ phase, 60 Hertz service with __60__ feet of power cable. Each SurePump Wheeled Sump Drainer shall have a __2__ inch MNPT threaded discharge nozzle and be capable of delivering __60__ GPM at __65__ feet of TDH. Each SurePump will be fitted with __60__ feet of stainless steel lifting cable of sufficient strength to permit removal of the unit.

DESIGN

Each SurePump Wheeled Sump Drainer shall be capable of pumping contaminated ground water for spill recovery, leachate, condensate, and purge applications. A removable transmitter mount (patent pending) shall be installed at the center bottom of the Sump Drainer for liquid level control. The Sump Drainer shall permit the unit to "pump down" to within __9__ inches of the sump bottom without any loss of performance or damage to the pump. External "priming" shall not be required nor allowed. The Sump Drainer shall be equipped with a vent valve to assist with the evacuation of air from the Sump Drainer.

MATERIALS

Major components shall be made of 304 stainless steel, seal rings are to be made of E-Glide™, and bearings are to be E-Glide. In addition, all fasteners shall be 304 stainless steel.

CHECK VALVE

Each unit shall include a built-in check valve with non-metallic seat, and housing and disc of 304 stainless steel.

SHAFT

The shaft shall be of 304 stainless steel and rotate on E-Glide bearings that are fluid lubricated.

DIFFUSER CHAMBER

The diffuser chambers for each impeller shall be 304 stainless steel and fitted with E-Glide impeller seal rings.

IMPELLERS

The impeller(s) shall be closed and consist of 304 stainless steel.

MOTOR

The motor shall be a submersible, hermetically sealed Franklin motor in __Pollution Recovery__ construction. The motor shall be designed for continuous duty, capable of sustaining up to __100__ starts per day. The motor shall be connected to the pump via a motor adaptor and coupling in 304 stainless steel. Single phase motors in ½ HP to 1 HP only shall have thermal protection in the motor windings to protect the windings from overload. The unit will restart automatically after the motor cools down. Larger horsepower single phase motors and three phase motors shall have thermal protection located in the control panel that is manually reset.

MOTOR LEAD WIRE

The lead wire shall be no-splice with EPG's "CP" waterproof and chemically resistant jacket over 600 Volt insulation and be of the length specified.

© 2014 EPG Companies Inc.
SurePump & E-Glide are Reg.
TM of EPG Companies Inc.

Materials of Construction

EPG SurePump™

	STANDARD
Check Valve Housing	304 Stainless Steel
Check Valve	304 Stainless Steel
Check Valve Seat	E-Glide™
Diffuser Chamber	304 Stainless Steel
Impeller Seal Ring	E-Glide™
Impeller	304 Stainless Steel
Motor Adapter	304 Stainless Steel
Inlet Screen	304 Stainless Steel
Pump Shaft	304 Stainless Steel
Coupling	329/420/431 Stainless Steel
Fasteners	304 Stainless Steel
Bearings	E-Glide™

FRANKLIN ELECTRIC MOTORS

	1/3 to 2 HORSEPOWER	3 to 60 HORSEPOWER
End Bell Castings	304 Stainless Steel over Iron	304 Stainless Steel over Iron
Stator Shell	301 Stainless Steel	301 Stainless Steel
Shaft Extension	303 Stainless Steel	303 Stainless steel
Fasteners	316 Stainless Steel	300 Stainless Steel
Seal Cover	Tefzel	Sintered Bronze
Shaft Seal	Viton	Viton, Carbon, Ceramic Face Seal
Diaphragm	Viton	Nitrile Rubber
Diaphragm Plate	304 Stainless Steel	304 Stainless Steel
Diaphragm Spring	302 Stainless Steel	302 Stainless Steel
Diaphragm Cover	316 Stainless Steel	304 Stainless Steel
Slinger	Viton	Nitrile Rubber
Lead Sleeve	316 Stainless Steel	316 Stainless Steel
Lead Jam Nut	316 Stainless Steel	N/A
Lead Jam Clamp	N/A	300 Stainless Steel
Lead Potting	Epoxy	Epoxy
Lead Bushing	Viton	Viton

© 2014 EPG Companies Inc.
SurePump is a Reg. TM of EPG Companies Inc.

EPG Sump Drainer Vent Tube / Check Valve

INSTALLATION INSTRUCTIONS

EPG's patented sump drainer* enables a submersible pump to pump down and restart in applications that would normally cause the pump to air lock.

Critical to the operation of the sump drainer is the installation of the vent tube and air check valve. The vent tube / check valve assembly has two functions. First, as the sump drainer fills with fluid the vent tube assembly allows air trapped inside of the sump drainer to escape, allowing the sump drainer to completely fill with fluid. When the sump drainer pump starts the vent assembly then closes, allowing the pump to draw liquid through the screen at the opposite end of the sump drainer. The closed check valve enables the pump to continue pumping even though the fluid level in the sump is below the normal intake of the pump.

The vent tube may be tied off to the pump discharge line. The vent check valve will operate correctly even if submerged.

INSTALLATION

Refer to Figure 1 for help in completing this procedure.

1. Slip the free end of the plastic vent tube onto the adapter on the top of the sump drainer.
2. Verify the open end of the check valve is labeled "VAC".
3. As you lower the sump drainer into the sump, uncoil the vent tube and fasten it to the discharge pipe. We recommend you keep the check valve above the fluid level. The check valve will work if it is submerged, but can foul with particles in the fluid.

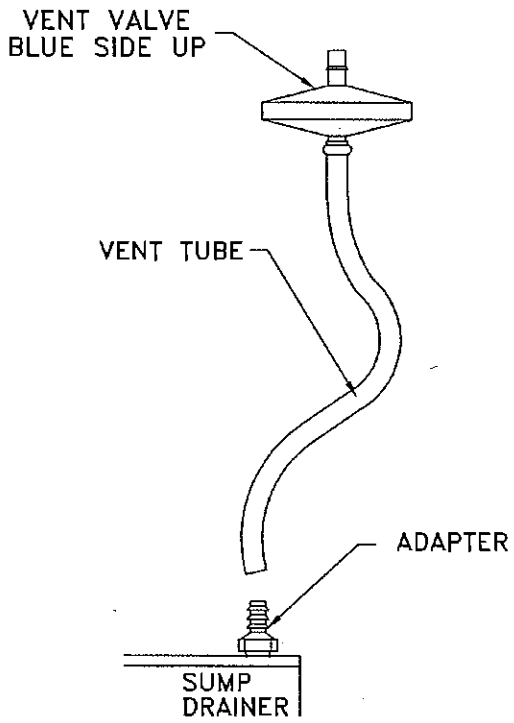

Figure 1. Vent Tube / Check Valve Assembly

* U.S. Patent #4,966,534 and 4,992,030

© 2014 EPG Companies Inc.

EPG SurePump™ with LevelMaster™ Level Sensor Disassembly / Assembly

OPERATION & MAINTENANCE INSTRUCTIONS

NOTE: Refer to Table B for list of tools needed for disassembly, assembly, and testing.

1. Place the pump on a suitable work surface with blocks to prevent the pump from rolling. Remove the vent tube by pulling straight out from the top. In cold weather it is better to unscrew the vent hose barb adaptor with tube attached rather than trying to pull the tube off the hose barb.

2. Unscrew the cord restraint nuts and pull inserts out about two (2) feet along the motor lead and level sensor lead. Loosen the insert from the wires so they are free to move through the cord restraint.

3. Mark the alignment of the tube and top (check for factory alignment marks). Center punch new marks in top and tube if factory marks cannot be found. The alignment marks will make reassembly easier.

4. Remove the four (4) cap screws that secure the tube to the top and carefully pull the top, with pump and motor attached, out of the tube. Do not hammer, pry, or pound on tube or top. Allow the sensor lead wire to slide through the cord restraint.

5. Remove the three (3) socket head setscrews from the level sensor housing on the bottom of the tube. Carefully pull the level sensor up and out from the bottom of the tube. Carefully remove the sensor lead wire by pulling the controller end back through the top. Cover the end of the sensor lead wire with tape to prevent moisture and dirt from entering. If the sensor is unused or put into storage, remove the dryer from the controller and install on end of vent tube during storage period.

6. Remove the nuts (4) that secure the motor to the pump and pull the motor from the pump. Do not remove the motor lead from the motor unless it will be replaced with a new lead. It is recommended that a new motor lead be used whenever the old lead is removed from the motor because of possible damage to the lead or distortion of the rubber seal that may prevent resealing.

7. Unscrew the motor lead nut from the motor. Work the lead back and forth to loosen seal and unplug the lead from the motor connector. Remove the lead by pulling the controller end back through the top.

8. Unscrew the pump assembly from the top using cloth strap wrenches to prevent damage to the metal surfaces.

CAUTION

Do not attempt to disassemble level sensor or pump motor. Any disassembly will void the warranty.

© 2014 EPG Companies Inc.
SurePump, LevelMaster, & PumpMaster are Reg. TM of EPG Companies Inc.

ASSEMBLY

1. Apply pipe sealing compound to the top threads and screw the pump to the top. To prevent damage to the top sealing surface or the pump bowls, tighten pump to top using cloth strap wrenches.

2. Slide motor and pump together and align motor shaft splines to pump splines by turning the motor shaft. Align the motor lead connector with the cutaway in the pump flange. Secure motor to pump with four (4) nuts.

3. Slide the long end of the motor lead through the cord restraint cap and nut in the top. Insert plug into the motor connector. Tighten motor lead connector nut to secure lead to motor.

4. Inspect upper and inside surface of tube and remove any sharp edges or burrs. Wipe surface of tube and top to remove any dirt, sand, or metal filings. Remove the O-ring and clean sealing groove in the top. If original O-ring installation used a spacer / shim between the top and O-ring, clean the shim and reinstall into the sealing groove in the top.

5. Carefully slide level sensor lead wire through the top cord restraint and nut.

> **CAUTION**
> Use care while handling the level sensor lead wire to prevent damage to the conductors and center vent tube.

6. Slide the level sensor and center it within the sensor housing at the bottom of the tube. Secure it with the three (3) socket head setscrews. To prevent damage to the sensor case, do not over tighten the setscrews.

7. Position the tube vertically and carefully slide the pump and motor assembly into the tube. Guide the assembly past the sensor lead wire to prevent crushing or cutting the lead wire. Remove slack from the sensor lead wire by pulling the lead wire out through the top.

8. Install a new top O-ring and liberally apply white petroleum jelly (Vaseline or equivalent) to the O-ring and cover sealing surfaces. Align the screw holes in the top with the holes in the tube and carefully slide the top into the tube making sure that the O-ring is not damaged.

9. Remove the slack from the motor lead and sensor lead wire. Secure the top to the tube with three (3) cap screws. Tighten cap screws until sealing grease starts to bead out from the top-to-tube joint. Do not over tighten.

10. Secure motor lead and sensor lead wire with the cord restraint nuts. Tighten the nut until the edge of the insert can be seen on the inside edge. Install vent hose.

© 2014 EPG Companies Inc.
SurePump, LevelMaster, & PumpMaster are Reg. TM of EPG Companies Inc.

SEAL TEST PROCEDURE

NOTE: Refer to Figure 2.

1. Install mechanical plug into the discharge pipe connection located in pump top. Tighten to recommended specifications. Refer to Table A.

2. Connect gage tubing to vent fitting.

3. Connect magnehelic gage to gage tubing.

4. Fill five gallon pail with water to the rim.

5. Place pump assembly, as depicted on Figure 2, in the filled five gallon pail.

6. Observe the magnehelic gage. The pressure should read about 5" W.C. and hold steady.
   a. If the pressure holds steady, the pump is ready to be installed. Remove the gauge tubing and the mechanical plug.
   b. If the gauge pressure does not hold steady, there is an air leak in the top assembly.
      b.1. Remove the pump assembly from the five gallon pail and refill the pail with water.
      b.2. Mix a solution of soap and water in a hand pump spray application bottle and spray the top assembly.
      b.3. Place the pump assembly in the five gallon pail and observe the top assembly for bubbles to determine point of the seal leak.
      b.4. Make necessary adjustments to the pump assembly and repeat items b.1. through b.3. until the leak has been corrected and the gauge pressure holds steady.

INSTALLATION

1. Remove the gage tubing and the mechanical plug and install the vent tube with vent valve.

2. Run the level sensor lead wire to the PumpMaster™ control panel or breakout box and connect the sensor RED wire to the (-) terminal and BLACK wire to the (+) terminal. Connect the level sensor vent tube to the dryer and check for kinks and crushed areas in the tube connection area. The vent tube must be open to allow atmospheric pressure change compensation in the sensor.

3. Repeat bucket test to verify level sensor operation.

4. Install pump into place.

5. Check the level sensor readings before running pump. The LevelMaster meter should indicate the proper depth of the sensor when immersed in liquid. If the meter shows -34.7 the lead wires connections are reversed, not connected or damaged. Be certain to check correct voltages at the controller and measure the resistance of the motor lead and motor to assure proper wiring.

© 2014 EPG Companies Inc.
SurePump, LevelMaster, & PumpMaster are Reg. TM of EPG Companies Inc.

Table A

MECHANICAL PLUG SPECIFICATION

Nominal Pipe Size	Maximum Allowable Back Pressure PSIG		Tightening Torque
	Air	Water	
1"	5	110	20 in. lbs.
1.25"	5	100	30 in. lbs.
1.5"	5	70	5 ft. lbs.
2"	5	40	10 ft. lbs.
3"	5	30	12 ft. lbs.

Table B

TOOLS AND ITEMS REQUIRED FOR MAINTENANCE OF EPG SUREPUMP

* 0-32 Screw with 5/16" hex head
* 5/16" Nut driver
* 10-32 x 5/16" long stainless steel set screw
* 3/32" Allen wrench
* .0005" Shim stock (blue)
* O-ring set 4, 5, and 6
* White petroleum jelly (Vaseline)
* Anti-seize compound
* Small channel lock pliers
* Magnehelic gage (Model 2010)
* Scissors to cut shim stock
* Flat blade screwdriver
* 1/2" Open end wrench
* 24" of 1/4" OD nylon tubing
* Mechanical plug set -- 1", 1.25", 1.5", 2", and 3"
* Torque wrench

© 2014 EPG Companies Inc.
SurePump, LevelMaster, & PumpMaster are Reg. TM of EPG Companies Inc.

Figure 1

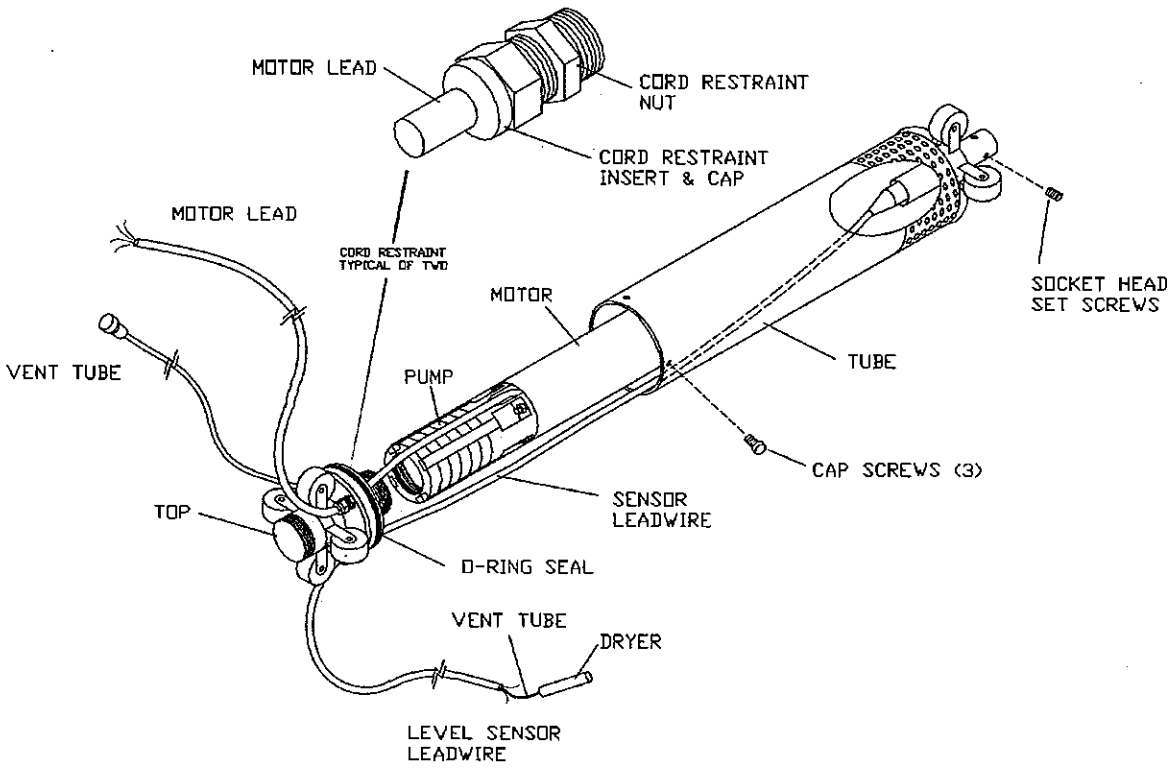

© 2014 EPG Companies Inc.
SurePump, LevelMaster, & PumpMaster are Reg. TM of EPG Companies Inc.

EPG Companies Inc.

September 2004

EPG SurePump™ with LevelMaster™ Level Sensor

REPLACEMENT INSTRUCTIONS FOR LEVEL SENSOR IN WSDPT

1. Use a 15/16 open end wrench to loosen and then remove the cord restraint nut (2).
2. Slide the cord restraint nut (2) and the grommet (3) off of the level sensor cable (1).
3. Use a 3/32" hex key to loosen the two setscrews from the locking collar.
4. Tie a string to the top end of the level sensor cable (1) and use electrician's tape to secure the string. Remove desiccant dryer from vent tube and close vent tube with tape.
5. Push several inches of the level sensor cable (1) into the sump drainer. Pull the level sensor holder (8) and the level sensor (6) out of the locking collar (5).
6. Pull the level sensor cable (1) through the sump drainer to a point where the electrician's tape can be removed.
   CAUTION: Do not pull the string through the sump drainer, it will be used to assist installation of the new level sensor.
7. Use the 3/32" hex key to loosen the setscrew (7) in the level sensor holder (8) and remove the level sensor.
8. Remove the string from the level sensor cable (1).
9. Remove the foam protective cover from the new level sensor.
10. Remove the desiccant dryer tube (9) and seal the vent tube with electrician's tape.
    CAUTION: The vent tube must have a dessicant dryer installed at all times or be sealed with electrician's tape. It is very important not to allow any dirt or moisture to enter the vent tube.
11. Place the new level sensor (6) in the level sensor holder (8). Secure the setscrew with the 3/32 hex key and torque to a maximum of seven-inch pounds.
    CAUTION: Do not over tighten the setscrew. Over tightening can damage the level sensor. Seven-inch pounds torque will secure the level sensor (6) in place.
12. Tie the string to the new level sensor cable end (1) and use electrician's tape to secure the string.
13. At the sump drainer's discharge end, pull the string and level sensor cable (1) through the sump drainer until the level sensor holder (8) is seated in the locking collar (5).
    CAUTION: Do not pull the cable tight. Allow two to three inches of slack in the sump drainer.
14. Insure the level sensor holder (8) is securely seated in the locking collar (5) and tighten the two setscrews (4). Torque to 15-inch pounds.
15. Remove the electrician's tape and string from the level sensor cable.
16. Reinstall the grommet (3) and the cord restraint nut (2). Tighten with the 15/16 open end wrench
17. Remove the tape from the vent tube and reinstall the dryer (9).

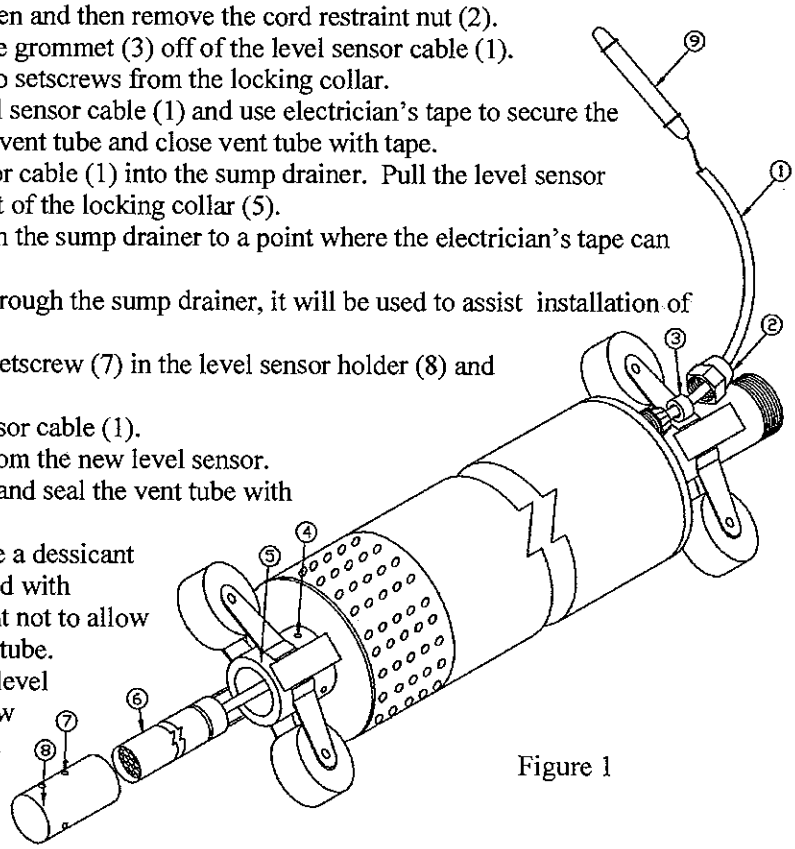

Figure 1

Tools/Equipment needed:

- 15/16 open end wrench
- 3/32 hex key
- Electrician's tape
- String-2 or 3 feet longer than sump drainer
- Torque wrench with inch pound scale

© 2014 EPG Companies Inc.
SurePump, LevelMaster, & PumpMaster are Reg. TM of EPG Companies Inc.

CAUTION

EPG submersible level sensors are designed for rugged use. However, care should be taken to protect these devices from over pressure and sudden impact. When lowering the level sensor into a liquid, penetrate the surface slowly and only to the depth that the unit is designed for. Do not drop or wash with high pressure since this may damage the unit.

© EPG Companies Inc. 2014

ENGINEER'S SPECIFICATION

EPG LevelMaster™ LT Submersible Level Sensor

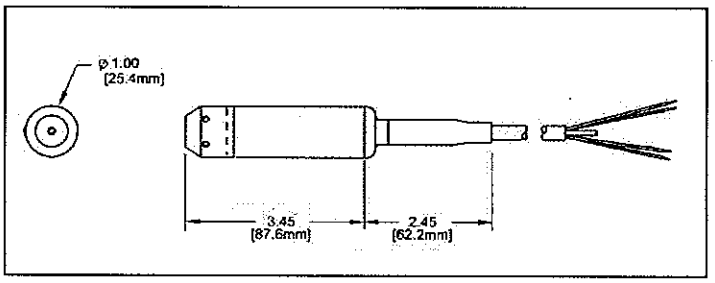

GENERAL FEATURES

* Application: The LevelMaster sensor is designed specifically to work with the EPG SurePump™, but its durability, accuracy and weight make it the logical choice for stand alone level applications. The chemical resistant jacketed cable with water block contains a vent tube for atmospheric pressure compensation.
* Ranges Available: 0-28" through 0-690' models are standard. Call EPG for other available ranges.
* Accuracy: The LevelMaster sensor has built-in temperature compensation as well as precise calibration giving an accuracy of ±0.25% at ambient temperature and a combined repeatability and hysteresis error of ±0.10%.
* Fully Submersible: The LevelMaster sensor is fully submersible in any liquid compatible with 316 stainless steel and the chemical resistant polyurethane cable jacket. It is designed for submergence at depths greater than 1.5X operating level without sustaining damage. Call EPG for more severe service.
* Superior Noise Immunity: Designed for heavy duty use in hostile environments, the LevelMaster sensor gives outstanding noise immunity. Unlike transducers, whose signals may be distorted by outside interference, the LevelMaster sensor utilizes a conditioned compensated 4-20 mA output to maximize signal strength and accuracy. The sensor also features a shielded lead to help prevent signal disruption from outside sources.

PERFORMANCE

* Depth Range:	0-28" thru 0-690' (0-1 PSI thru 0-300 PSI)
* Static Accuracy:	±0.25% FSO
* Thermal Error:	0.10% FSO/°C
* Resolution:	+0.0001% FS

© 2014 EPG Companies Inc.
LevelMaster & SurePump are Reg. TM of EPG Companies Inc.

ELECTRICAL

* Excitation:	9 to 28 VDC, Red = (+) excitation, Black = (-) excitation
* Input Current:	20 mA maximum
* Output:	4-20 mA (2 wire)
* Zero offset (max):	4-20 mA, ±.25mA
* Output impedance:	<10 ohms
* Insulation resistance:	100 megohms at 50VDC
* Circuit protection:	Polarity, surge & shorted output
* Power supply rejection:	<±.05% FSO/VDC (mA output)
* Electrical termination:	2-22 AWG conductors in a shielded cable with sensor breather and polyurethane jacket

ENVIRONMENTAL

* Compensated temp range:	0° to 50°C
* Operating temp range:	-20° to 60°C

PHYSICAL

* Dimensions:	Nominal diameter of 1.0" X 5.9" length
* Weight:	7 oz. (not including cable)
* Cable:	Polyurethane jacketed shielded cable with polyethylene vent tube and Kevlar tension members (.05 lbs/ft)
* Wetted materials:	316 SS, Viton
* Mounting provision:	Suspended by cable

MODEL {Call EPG for other ranges available – specify length (---)}

PART #	DESCRIPTION	RANGE
LT01X---	Submersible Pressure Transmitter	0-2.3'
LT03X---	" " "	0-6.9'
LT05X---	" " "	0-11'
LT07X---	" " "	0-16'
LT10X---	" " "	0-23'
LT15X---	" " "	0-34'
LT30X---	" " "	0-69'
LT50X---	" " "	0-115'
LT100X---	" " "	0-230'
LT300X---	" " "	0-692'

© 2014 EPG Companies Inc.
LevelMaster & SurePump are Reg. TM of EPG Companies Inc.

EPG LevelMaster™ Level Sensor

OPERATION & MAINTENANCE INSTRUCTIONS

Characteristics of the LevelMaster Level Sensor

EPG Companies Inc. LevelMaster level sensor is a submersible pressure transmitter. The pressure transmitter is a precision measurement devise that incorporates isolated diaphragm sensors that are specifically designed for use with hostile fluids and gases. The sensor utilizes a silicon pressure cell that has been fitted into a stainless steel package with a stainless steel barrier diaphragm. The sensor assembly is housed in a rugged 316 stainless steel case.

The device features a high performance internal signal conditioning. Standard output is 4 to 20 mA. All units have surge and reverse polarity protection.

All EPG transmitters are permanently etched with wiring information, part number (P/N), serial number (S/N), date of manufacture (DOM), range, excitation, and output.

All EPG transmitters are designed for rugged use. However, care should be taken to protect these devices from overpressure and sharp impact. When lowering submersible pressure transmitters into a liquid, penetrate the surface slowly and only to the depth necessary. Do not drop the unit from above the surface. All transmitters can be cleaned by rinsing them in mild detergent. Do not pressure wash.

Vent Filter / Water Vapor Trap

The vent filter and water vapor trap is a replaceable vent tube dehumidifier intended for use with the submersible pressure transmitters. This device is specifically designed to protect sensitive electronic components from mildew, corrosion, rust, and other forms of deterioration while at the same time preventing the formation of a liquid column.

Vent filters should be changed when they are 85% spent. Do not remove the old filter until a new one is available. The number one failure mode is moisture and corrosion damage due to lack of maintenance of the vent filter. The vent filter connects to the existing vent tube as it exits the cable at the junction box via a tube.

Replacement vent filters can be ordered by calling EPG at 800-443-7426. The vent filter and water vapor trap can be exposed to air, industrial gases, refrigerants, organic liquids, and solvents. However, they should not be used when ammonia is present.

Specifications

Most installations of submersible pressure transmitters connect the cable directly to the control panel or to a breakout box (junction box). From this breakout box, end users must run cable to the required

© 2014 EPG Companies Inc.
LevelMaster is a Reg. TM of EPG Companies Inc.

instrumentation. Specifications for the polyurethane or Tefzel jacketed cable is as follows:

* Excitation:	10 to 40 VDC, Red = (+) excitation, Black = (-) excitation
* Input Current:	20 mA maximum
* Output:	4-20 mA (2 wire)
* Zero offset (max):	4-20 mA, ±.12mA
* Output impedance:	<10 ohms
* Insulation resistance:	100 megohms at 50VDC
* Circuit protection:	Polarity, surge & shorted output
* Power supply rejection:	<±.05% FSO/VDC (mA output)
* Electrical termination:	2-24 AWG conductors in a shielded cable with sensor breather, water block, and polyurethane jacket
* Compensated temp range:	0° to 50°C
* Operating temp range:	-20° to 70°C
* Dimensions:	Nominal diameter of 1.0" X 4.15" length
* Weight:	7 oz. (not including cable)
* Cable:	Polyurethane jacketed shielded cable with polyethylene vent tube and Kevlar tension members
* Wetted materials:	316 SS, Viton
* Mounting provision:	Suspended by cable

Polyurethane Cable

The standard cable is polyurethane and will handle most environments and has a self-sealing feature. If a cut occurs in the outer jacket of the cable, a water block feature below the outer jacket will self-seal in most cases to guard against the incursion of water.

Chemical Resistance of Polyurethane

Potable Water, Waste Water, Borax, Butane, Animal Fat, Carbonic Acid, Citric Acid, Cod Liver Oil, Corn Oil, Glycerin, Glycol, Mineral Oils, Potassium Nitrate, Potassium Sulfate, Silicone Oils, Stoddard Solvent, Tannic Acid (10), Tartaric Acid, Turbine Oil, and most Leachate.

Tefzel® Cable

Optional Tefzel cable is recommended for use in highly corrosive environments. It offers additional resistance in corrosive environments over the standard polyurethane cable.

Chemical Resistance of Tefzel

© 2014 EPG Companies Inc.
LevelMaster is a Reg. TM of EPG Companies Inc.

Acetic Acid (Glacial), Acetic Anhydride, Acetone, Aluminum Chloride, Anti-Freeze, Bromine, Calcium Chloride, Calcium Hydroxide, Chlorine, Copper Chloride, Ferrous Chloride, Hydrochloric Acid, Ketones, Lacquer Thinners, Leachate, and Sulfuric Acid.

Cable Lengths

The maximum length of cable to be used with the submersible pressure transmitter is up to 10,000 feet.

OPTIONS

* Titanium Housing:	Used for highly corrosive environments
* Lightning Protection:	Protects against transient voltages and lightning associated surges up to 20,000 amperes
* Temperature Sensor:	A sensor with 4-20 mA output for temperature (0-50°C) is available -- Excitation: 9-30 VDC, White = (+) excitation, Green = (-) excitation.

© 2014 EPG Companies Inc.
LevelMaster is a Reg. TM of EPG Companies Inc.

TEST EQUIPMENT

To insure proper installation, EPG recommends the following instruments. When working with electrical circuits, use caution to avoid electrical shock.

Megohmmeter:	To measure insulation value of motor and motor leads to ground. The higher the reading, the better.
Ohmmeter:	(Must be able to read less than 1 ohm) To measure resistance winding to winding in motor, check quality of any connections made in motor circuit to test coils of relays and continuity of circuits.
Volt Meter:	To verify correct supply voltage and measure system requirements when running.
Clamp on Amp Meter:	To measure current draw in system.

© 2014 EPG Companies Inc.

VENT TUBE ASSEMBLY

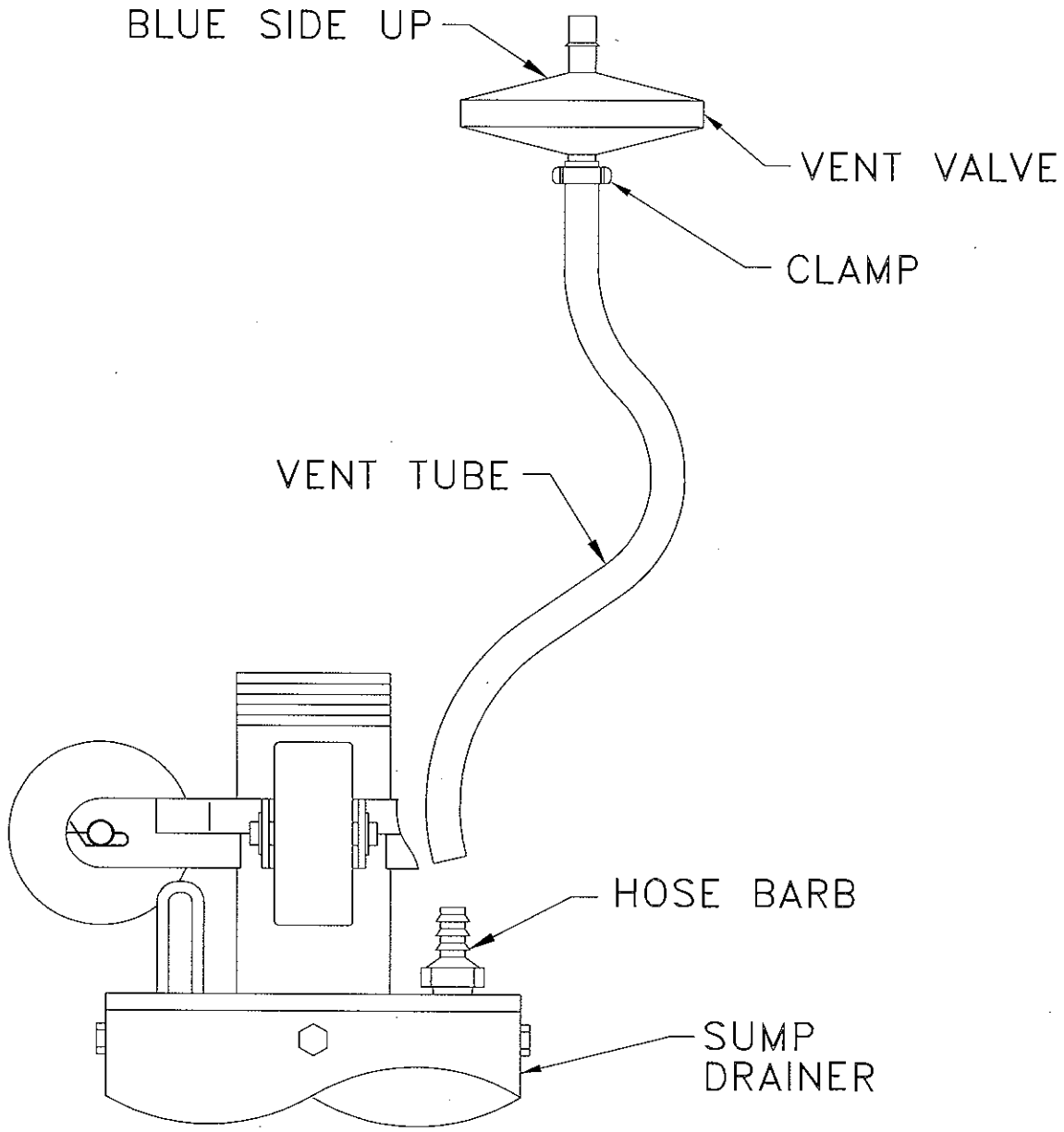

TROUBLESHOOTING GUIDE

FAULT	POSSIBLE CAUSE	HOW TO CHECK	HOW TO CORRECT
Pump or blower does not run.	No electricity at controller.	Check for voltage at controller.	If no voltage at controller, check for cause. Contact power company if voltage is incorrect.
	Fuses are blown or circuit breakers are tripped.	Check fuses for correct size and check for loose, dirty, or corroded connections in fuse receptacle, terminal strip and at splice points.	Replace with proper fuse or reset circuit breaker. If new fuses blow or circuit breaker trips, the electrical installation, motor and leads must be checked.
	Motor starter overloads have tripped out.	Check for voltage on line and load side of starter. Check megohm value of motor and lead.	Reset heaters or replace. Inspect starter for other damage. If heater trips again, check the supply voltage. Replace motor or lead as needed.
	Motor and/or cable are defective.	Turn off voltage, disconnect drop leads from controller to the motor. Measure the lead-to-lead resistances with ohmeter (RX-1). Measure lead-to-ground values with megohm meter. Record measured values.	If open winding or ground is found, remove pump and recheck values at the surface. Repair or replace motor or cable.

 © 2014 EPG Companies Inc.

FAULT	POSSIBLE CAUSE	HOW TO CHECK	HOW TO CORRECT
	Starter does not energize.	Energize control circuit and check for voltage at the holding coil.	If no voltage, check control circuit. If voltage, check holding coil for shorts. Replace bad coil.
	Defective controls.	Check all sensors and safety switches for operation. Inspect contact in control devices.	Replace worn or defective parts.
	Defective capacitor. (Single phase only.)	Turn off voltage, discharge capacitor. Check with megohm meter. Record measured values.	Replace if defective.
Pump runs but does not deliver liquid.	Liquid level in sump is too low or sump infiltration rate is reduced or intranded gas.	Check sump draw down.	See pump data sheet for minimum submergence values.
	Vent valve not installed or improperly installed.	Make sure valve is attached to the to of the sump drainer and that it is not installed backward.	Replace valve if missing. Reverse valve if installed upside down.
	Inlet strainer is clogged.	Install pressure gauge, start pump, gradually close the discharge valve and read pressure at shutoff.	Remove pump and inspect for blockage. Clean screen as needed. Inspect check valve for blockage. Rinse out pump and reinstall.

 © 2014 EPG Companies Inc.

FAULT	POSSIBLE CAUSE	HOW TO CHECK	HOW TO CORRECT
	Pump is defective or worn.	Same as description above.	Convert PSI to feet (PSI x 2.31 ft/PSI = ___ ft.), add elevation from pressure gauge to liquid level to the converted pressure reading. Refer to specific pump curve for shutoff head for that pump model. If calculated value is close to curve, pump is probably OK. If not, remove pump & inspect.
Pump runs continuously.	Leak in system.	Check system for leaks.	Replace damaged pipes or repair leaks.
	Worn pump.	Install pressure gauge, start pump, gradually close the discharge valve and read pressure at shut-off.	Pull pump and inspect. Replace worn impellers, bearings or other close fitting parts.
	Loose or broken motor shaft.	Little or no liquid will be delivered if the pump/motor coupling is loose or if the motor shaft has sheared off.	Check for damaged shafts if coupling is loose and replace worn or defective units.
	Pump intake or impellers blocked.	Restricted flow may indicate a clogged intake screen or partially blocked impellers. Pump may be installed in mud or sand.	Clean screen and reset pump. It may be necessary to clean impellers.

 © 2014 EPG Companies Inc.

FAULT	POSSIBLE CAUSE	HOW TO CHECK	HOW TO CORRECT
Pump runs but at reduced capacity.	Wrong rotation.	Check for proper electrical connection in control box.	Correct wiring and change leads as required.
	Leak in system.	Check system for leaks.	Replace damaged pipes or repair leaks.
	Pump strainer or check valve is clogged.	Remove pump and inspect.	Clean, repair, rinse out and re-install pump. It may be necessary to take pump apart and clean impellers. Check discharge line for any obstructions.

 © 2014 EPG Companies Inc.

EPG Companies Inc.

December 1997

Wire Cable Clamp

INSTALLATION
INSTRUCTIONS

Recommended Method of Applying Clamps to get Maximum Holding Power

1. *Turn back* the specified amount of cable from the loop. Apply the first clamp one base width from the dead end of the wire cable (U-bolt over dead end - live end rests in clamp saddle). Tighten nuts evenly to recommended torque.

2. *Apply the next clamp* as near the loop as possible. Turn on nuts firm, take up rope slack, and tighten nuts evenly to recommended torque.

3. Do not use clamps on plastic coated wire rope.

4. Never use clamps to connect two straight lengths of wire rope.

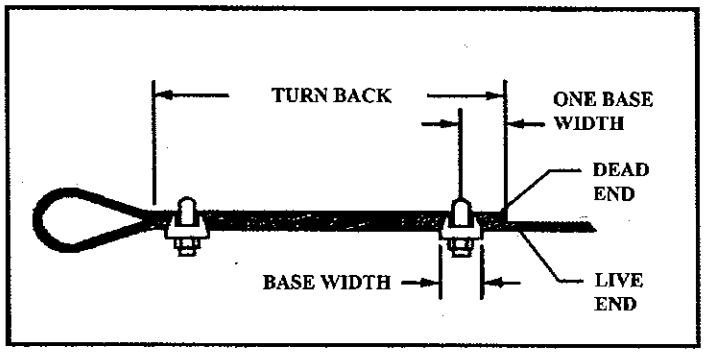

Attaching Clamps

A termination made in accordance with instruction and using the number of clamps shown has an approximate 80% efficiency rating. This rating is based upon the catalog breaking strength of wire rope.

Number of Clamps Recommended

Clamp Size Inches	Minimum No. of Clamps	Amount of Cable to Turn Back in Inches	Breaking Strength FT/LBS	Clamp Torque FT/LBS	Cable Strength with Clamps FT/LBS
1/8	2	3 1/4	1,760	4.5	1400
3/16	2	3 3/4	3,700	7.5	2960
1/4	2	4 3/4	6,400	15	5120

© 2014 EPG Companies Inc.

STORAGE INFORMATION

SUREPUMP™

1. The ideal storage condition for SurePump is in a warm dry location. Although SurePump will tolerate a light freeze, temperatures should not fall below -3°C (27°F). Repeated freezing and thawing should be avoided to prevent possible loss of motor fluid.

2. Limit storage time to less than two years if storage area temperatures exceed 100°F. Limit storage time to one year or less if storage area temperatures exceed 130°F.

3. To prevent motor seal damage and/or fluid loss, always store SurePump vertically.

LEVELMASTER™

1. IMPORTANT: During any short or long term storage, to prevent moisture damage to internal components, the desiccant dryer must be installed on the vent tube of the submersible level sensor signal cable. Store in a warm dry location to prevent internal condensation in the meter enclosure.

2. If the level sensor is installed in a SurePump, pump must be stored in a vertical position. Coil the sensor signal cable and place in a box or protected area to prevent damage to the signal cable. Do not stack heavy items on top of level sensor signal cable.

3. Make certain that the desiccant dryer is attached to the end of the level sensor vent tube. Inspect dryer periodically and replace if crystals are pink or white.

PUMPMASTER™ CONTROLS

1. To prevent condensation/moisture damage within the control cabinet, store the PumpMaster in a warm dry location.

2. Check that the corrosion inhibitor cartridge is installed in the interior of the cabinet. If the PumpMaster control will be stored for over six months, contact EPG Companies Inc. for additional corrosion inhibitor cartridges

NOTE
The non-volatile memory of level and flow meters may deteriorate if left without power for periods greater than one year. If storage times are expected to exceed one year contact EPG Companies Inc. for special precautions.

© 2014 EPG Companies Inc.
PumpMaster, LevelMaster & SurePump are Reg. TM of EPG Companies Inc.

EPG Companies Inc.

SurePump™ Installation Record

Form Completed by: _____ Installation Date: _____

Company: _____ EPG Serial #: _____

PUMPS, CONTROLS AND POWER SUPPLY

Installer:	Address:	Installation Location:
Motor Model HP	Volts: Max Amps Rating:	Pump Model:
Power Supply Transformers: Number Used: KVA Each:	Hertz: Comments:	
Pump Control Panel: Mfg. & Model #:	Motor Starter Size:	Overload Heater Part or setting range: IEC Starters:
Lightning Arrestors: Mfg. & Model:	Surge Capacitors: Yes _____ No _____	Disconnect Fuse or Circuit Breaker Amp Rating:
Primary Flow Control Devices: (Low Level Control, Flow Control, Valve, System Back Pressure, etc.)		

OPERATING DATA (Measurements at Control Panel)

PUMP CONDITIONS: GPM	VOLTS	AMPS
Pump Not Running 0	R-Y _____ R-B _____ B-Y _____	
Open Discharge	R-Y _____ R-B _____ B-Y _____	R _____ Y _____ B _____
Normal Operation Run Time _____ Off Time _____	R-Y _____ R-B _____ B-Y _____	R _____ Y _____ B _____

INSTALLATION DATA

© 2014 EPG Companies Inc.
PumpMaster, LevelMaster & SurePump are Reg. TM of EPG Companies Inc.

EPG Companies Inc.

Discharge Line Size:	Discharge Pressure:	Pump Submergence:	Fluid Temp: _____°F _____°C
External Check Valve Used?	Location:	Cable Length & Size:	Ground Resistance
Insulation Megohm Readings:	Before Installation:	After Installation:	After 30 min. Run:

SENSORS

Type of Level Sensor: Pressure Transmitter _____ Load Monitor _____ Floats _____ Other _____	Transmitter Serial Number:
Length of Sensor Lead:	Ohm Readings Across I.S. Barrier:
mA Readings on Transmitter Lead:	Voltage Reading Entering Level Meter: ____VAC Voltage Leaving Level Meter: _____VAC
Are Flow Sensors Used: Yes _____ No _____	Flow Spool Made of: PVC _____ Stainless Steel _____

Comments: _____

_____

_____

_____

_____

_____

Place one copy of this record in the control panel, return one copy to EPG, and retain original for your records.

In case of problems or questions, contact EPG Companies Inc., 19900 County Road 81, Maple Grove, MN 55311. Phone: 800-762-8418 FAX: 763-493-4812

© 2014 EPG Companies Inc.
PumpMaster, LevelMaster & SurePump are Reg. TM of EPG Companies Inc.

SurePump Warranty Requirements

The following conditions must be met to validate EPG's SurePump warranty…

A: Form 200 must be completed and returned within 10 days of startup.

B: Motor to be protected by dual element time delay fuses.

C: Motor starter overloads must be ambient-compensated quick-trip. Trip must be within 10 seconds.

D: Supply EPG with make and model of starter and overload heaters selected for approval.

© 2014 EPG Companies Inc.

EPG SurePump™ Installation Record

EPG Job No. _____

Installer's Name _____

Address _____

City _____ State _____ Zip _____

Phone _____ Fax _____

Contact name _____

Owner's Name _____

Address _____

City _____ State _____ Zip _____

Phone _____ Fax _____

Contact name _____

Sump Name/ ID _____ Date Installed _____

Leachate or Condensate Temp _____ °F Or °C

Pump:

Model No. _____

Rating: _____ GPM@ _____ Ft. TDH

HP _____ Voltage _____ Phase _____

Actual Pump Delivery _____ GPM@ _____ PSI

Operating Cycle _____ ON (Min/Hr) _____ OFF (Min/Hr) (Circle Min. or Hr. as appropriate)

Side Slope Riser Information:

Slope _____ :1

Length of riser Pipe (A+B) _____ ft.

Vertical Distance = Sump to Top of Riser Pipe (C) _____ ft.

Riser ID _____ SDR _____

Distance From Top of Riser Pipe to Controller _____ ft.

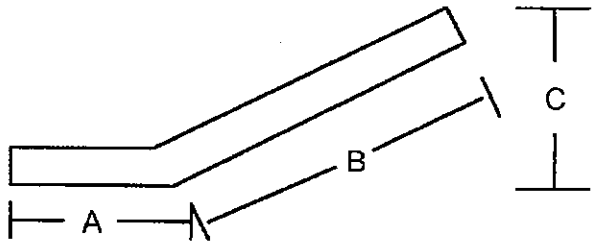

Power Supply:

Cable: Service Entrance to Control Distance _____ ft Wire Size _____ AWG/MCM

Copper ____ Jacketed _____ Aluminum ____ Individual conductors ____

Cable: Control to Motor _____ ft _____ AWG/MCM

Copper ____ Jacketed ____

© 2014 EPG Companies Inc.
PumpMaster & SurePump are Reg. TM of EPG Companies Inc.

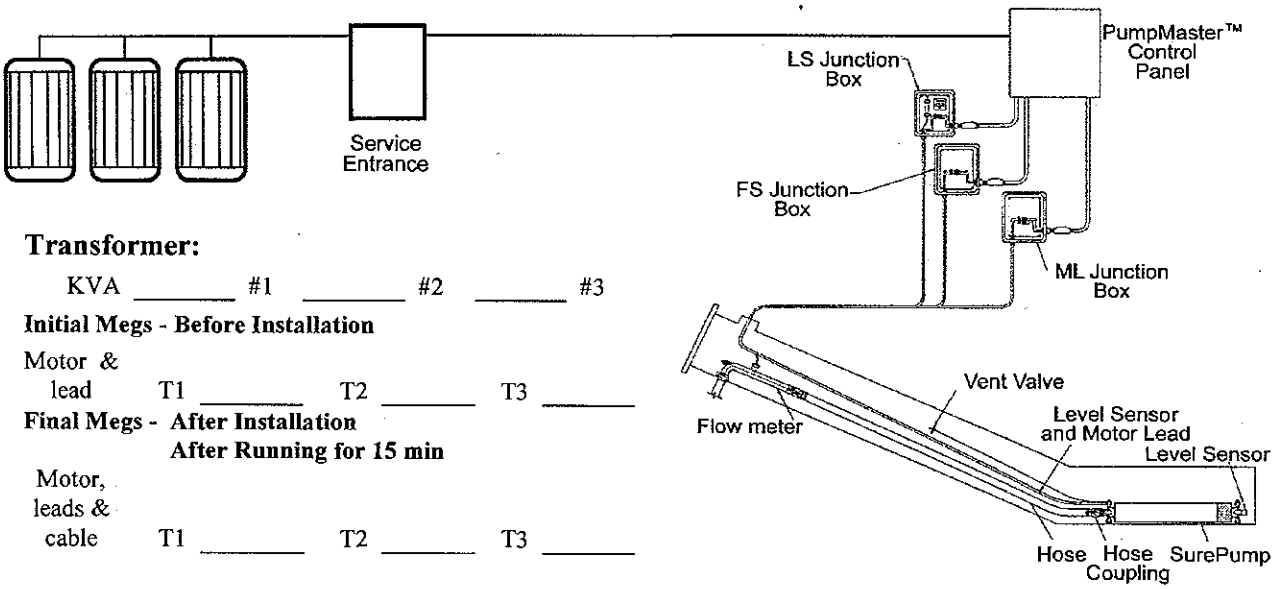

Transformer:

KVA _____ #1 _____ #2 _____ #3

Initial Megs - Before Installation

Motor & lead T1 _____ T2 _____ T3 _____

Final Megs - After Installation

After Running for 15 min

Motor, leads & cable T1 _____ T2 _____ T3 _____

Incoming Voltage:

No Load L1-L2 _____ L2-L3 _____ L1-L3 _____

Full Load L1-L2 _____ L2-L3 _____ L1-L3 _____

Running Amps:

Hookup:1

Full Load L1 _____ L2 _____ L3 _____ % unbalanced _____

Hookup:2

Full Load L1 _____ L2 _____ L3 _____ % unbalanced _____

Hookup:3

Full Load L1 _____ L2 _____ L3 _____ % unbalanced _____

Ground wire size _____ AWG/MCM

DC Ground Current _____ mA Ground Test _____ Ohms

Motor Surge Protection _____ Yes _____ No

Control Panel:

Model # _____

Short Circuit Device

Circuit Breaker _____ Rating _____ Setting

Fuses _____ Type _____ Rating

_____ Standard _____ Time Delay

Controls are Grounded to:

_____ Motor

_____ Rod

_____ Power Supply

Start Overloads:

Set at _____ amps

Name: _____

Company _____

Date _____

© 2014 EPG Companies Inc.
PumpMaster & SurePump are Reg. TM of EPG Companies Inc.

INSTALLATION GUIDE

EPG SurePump™ Pumping System

- ❑ 1. Verify that equipment and supply voltage match.
- ❑ 2. Inspect equipment, look for shipping damage, dirt, and rough handling.
- ❑ 3. Control panel should be mounted in a secure way at least 15' from riser or sump and 36" above grade to bottom of control panel.
- ❑ 4. When the control panel is mounted, make sure it is level front to back, side to side and top to bottom. Shim and adjust the mounts until it is level and square in all three plains. The door should close without sagging or binding.
- ❑ 5. Inspect inside of control panel. Look for items which might have come loose during shipping.
- ❑ 6. Install breakout junction boxes between the riser or sump and control panel. See instructions for location suggested for junction boxes which are packed with breakout junction boxes.
- ❑ 7. Test level sensor in bucket of water. Does it return back to zero? Control panel needs to be installed and have power to it.
- ❑ 8. Install vent valve and tubing. See Bulletin 0130c.
- ❑ 9. Install suspension cable. See Bulletin 6090a.
- ❑ 10. Fasten motor lead and sensor cable to discharge line every 5' to 7' with plastic wire ties. It's best if they are on separate sides of line; use padding between cables and any metal straps.
- ❑ 11. Run pump down riser slowly using stainless steel suspension cable as hold back. Make sure motor lead and sensor cable are slack as you lower pump.
- ❑ 12. Take ohm reading of each motor lead wire to wire and compare the values in Table 13 of the Franklin Electric motor manual for 1Ø and Table 22 or 24 for 3Ø. Be sure to add wire resistance value to value from table 13. See page 47 for wire resistance.
- ❑ 13. Check insulation resistance as pump is lowered down riser. Resistance may drop gradually as pump and cable enter the liquid, but any sudden drop indicates a problem.
- ❑ 14. Run sensor leads and power cables in separate conduits to control panel. It is a good idea to use breakout junction boxes. See Design Guide 05644 and Bulletin 8230.
- ❑ 15. If you have to remove dryer from end of transducer cable to pull cable through fittings or conduit. Seal end of the vent tube with a piece of tape. Reinstall dryer as soon as possible. See Bulletin 0550a.
- ❑ 16. Megger motor leads. Resistance must be 1 megohm or greater.
- ❑ 17. Connect pump to control panel complying with local and national codes. Controller terminal strips, motor leads, and sensor leads are all labeled and/or color coded to simplify connections.
- ❑ 18. Inspect wire connections. Are they the correct colors? Are they tight?

© 2014 EPG Companies Inc.
LevelMaster & SurePump are Reg. TM of EPG Companies Inc.

- ☐ 19. If color-coded wires were not continued from sump or riser you need to ohm out each circuit.
- ☐ 20. Measure resistance to ground. It must be less than 25 ohms. If greater stop work and report to owner. It should be 1 ohm or less to protect electronic equipment.
- ☐ 21. Measure voltage prior to control panel or at entrances to control panel. Measure and record voltage line to line.
- ☐ 22. Compare these reading to voltage listed on drawing and label in control panel.
- ☐ 23. Review equipment list and drawings for any accessory circuits. If present, run volt and ohm test.
- ☐ 24. Check and make sure all hand switches are in the off position. If you have a water level indicator verify leachate level in sump or riser.
- ☐ 25. Turn on power at panel main disconnect.
- ☐ 26. Level meters display should light up. Record displayed reading. How does this reading compare to your measured level reading?
- ☐ 27. If level and flow meter do not light up check GFCI, reset if necessary.
- ☐ 28. Are any indicator lights on?
- ☐ 29. Should they be on?
- ☐ 30. Make sure pump is turned off. Using built in or hand held simulator, verify level meter settings are correct for this site. See meter data sheet for factory settings and meter instructions.
- ☐ 31. Bump pump by turning switch to hand two or three times to make sure pump has reached its resting point. You should have minimum of 3' of slack in the cables.
- ☐ 32. To verify correct rotation place hand around discharge line. It will torque right if the rotation is correct when looking down at pump.
- ☐ 33. When pump is running measure and record amperage and voltage. Check 3Ø systems for current balance it should be within 5% of average.
- ☐ 34. Verify that starting, running and stopping causes no significant vibration or hydraulic shocks.
- ☐ 35. After 15 minutes of running time measure volts and amperage to see if they are stable. Are they as specified?
- ☐ 36. After pump and level sensor have been tested pot seal offs.
- ☐ 37. Complete Form 200. Note: <u>If this form is not completed and returned to EPG it will impact system warranty.</u>

Special Instructions: Because electrical fittings are not designed to be liquid or vapor tight, you must use a thread sealant such as Teflon tape on all threaded joints. All field installed openings must be sealed with gasket threaded fittings such as Myers hubs. When using thread tape on joints, the conduit can no longer be considered a ground path. You must pull separate ground wires to bond all the parts to the ground.

© 2014 EPG Companies Inc.
LevelMaster & SurePump are
Reg. TM of EPG Companies Inc.

START UP CHECKLIST

EPG SurePump™ Pumping System

QUESTIONS FOR CONTRACTOR OR INSTALLER

- ☐ A: Did they use the Installation Guide – Bulletin 0610b?
- ☐ B: Was sensor and power cable tied or strapped to discharge line? On what kind of spacing?
- ☐ C: What is the as built length of riser and sump? Were cables long enough? There should be three or more feet of slack in the cables.
- ☐ D: What size cable was run for supply power?
- ☐ E: What is the distance from power supply transformer to pump control panel?
- ☐ F: How did they verify that pump is down into sump?
- ☐ G: Did they test level sensor prior to installing?
- ☐ H: Did they test pump prior to installing or prior to your arrival?
- ☐ I: Was a pressure gauge installed in the pump discharge line?
- ☐ J: Do they have any questions or concerns?
- ☐ K: Did they complete Form 200?

PHYSICAL INSPECTION OF CONTROL PANEL

- ☐ A: Is the control panel located at least 15' from sump or riser and 36" above grade to bottom of panel?
- ☐ B: Are power and sensor cable runs in separate conduit? If not, stop work and have this corrected.
- ☐ C: Are seal-offs installed in both sensor and power runs? If not, suggest breakout junction boxes with seal-offs or have seal-offs installed.
- ☐ D: Are seal-offs potted? If not, stop work and have them potted.

Special Instructions: Because electrical fittings are not designed to be liquid or vapor tight, you must use a thread sealant such as Teflon tape on all threaded joints. All field installed openings must be sealed with gasket threaded fittings such as Myers hubs. When using thread tape on joints, the conduit can no longer be considered a ground path. You must pull separate ground wires to bond all the parts to the ground.

© 2014 EPG Companies Inc.
LevelMaster & SurePump are Reg. TM of EPG Companies Inc.

- ❑ E: Will inner and outer door of enclosure open and close freely? If not, loosen enclosure mounting bolts and shim until it is level and square. Then retighten mounting bolts.
- ❑ F: Water and vapor tight seals are required at all openings.

PRIOR TO ENERGIZING CONTROL PANEL

- ❑ A: Measure resistance to ground. It must be less than 25 Ohms. If greater stop work and report to owner. It should be 1 Ohm or less to protect electronic equipment.
- ❑ B: Measure voltage prior to control panel or at entrances to control panel. Measure and record voltage line.
- ❑ C: Compare this reading to voltage listed on drawing and label in control panel.
- ❑ D: Megger motor leads resistance must be 1 megohm or greater.
- ❑ E: Take Ohm reading of each motor lead wire to wire and compare these to values in Table 13 of the 2011 Franklin Electric AIM Manual for 1Ø and Table 22 or 24 for 3Ø. Be sure to add wire resistance value to value from Table 13and 21. See page 47 for wire resistance.
- ❑ F: Inspect inside of control panel. Look for items that may have come loose during shipping.
- ❑ G: Has sealing edge made contact with the gasket all the way around?
- ❑ H: Inspect wire connections. Are they the correct colors? Are they tight?
- ❑ I: If color-coded wires were not continued from sump or riser you need to Ohm out each circuit.
- ❑ J: Review equipment list and drawings from any accessory circuits. If present, run volt and Ohm test.
- ❑ K: Check and make sure all hand switches are in off position. If you have a water level indicator verify leachate level in sump or riser.

POWER UP

- ❑ A: Turn on power at panel main disconnect.
- ❑ B: Level meters display should light up. Record displayed reading. How does this reading compare to your measured level reading?
- ❑ C: If level and flow meter do not light up check GFCI, reset if necessary.
- ❑ D: Are any indicator lights on? Should they be on?

© 2014 EPG Companies Inc.
LevelMaster & SurePump are
Reg. TM of EPG Companies Inc.

- ❑ E: Make sure pump is turned off. Using built in or hand held simulator, verify level meter settings are correct for this site.
- ❑ F: Bump pump by turning hand switch two or three times to make sure pump has reached its resting point. You should have minimum of 3' of slack in the cables.
- ❑ G: To verify correct rotation place hand around discharge line. It will torque right if the rotation is correct.
- ❑ H: If there is liquid in sump with level above pump start set point and below 150". Then turn pump selector switch to AUTO. Run pump through one complete cycle.
- ❑ I: When pump is running measure and record amperage and voltage. Check 3Ø systems for current balance within 5% of average.
- ❑ J: Verify that starting, running and stopping causes no significant vibration or hydraulic shocks.
- ❑ K: How does your Form 200 compare to the installers?

© 2014 EPG Companies Inc.
LevelMaster & SurePump are
Reg. TM of EPG Companies Inc.

Model NW Stainless Steel Discharge Adapter

MODEL	"A"	"B"	Minimum I.D.	Weight (lbs.)
NW1.5SS-C	1.5" NPT	4"	8"	8
NW2SS-C	2" NPT	5"	8"	12
NW3SS	1.5" NPT	6.25"	12"	26
NW4SS	4" NPT	8.125"	12"	33

For Leachate, Monitoring, and Remediation Piping Applications

- 316 stainless steel construction for "C" models. All others are 304 Stainless Steel
- Insert and housing are tapered for easy installation and removal
- Viton® O-Ring seal
- EPDM gasket for inner and outer wall seal
- Extended length nipple on housing allows adapter to fit from 1/4" to 4" thick wall pipe
- 1.5", 2", 3", 4" NPT sized fittings for pump pipe, lift out pipe and discharge pipe
- Tested to 300 PSIG

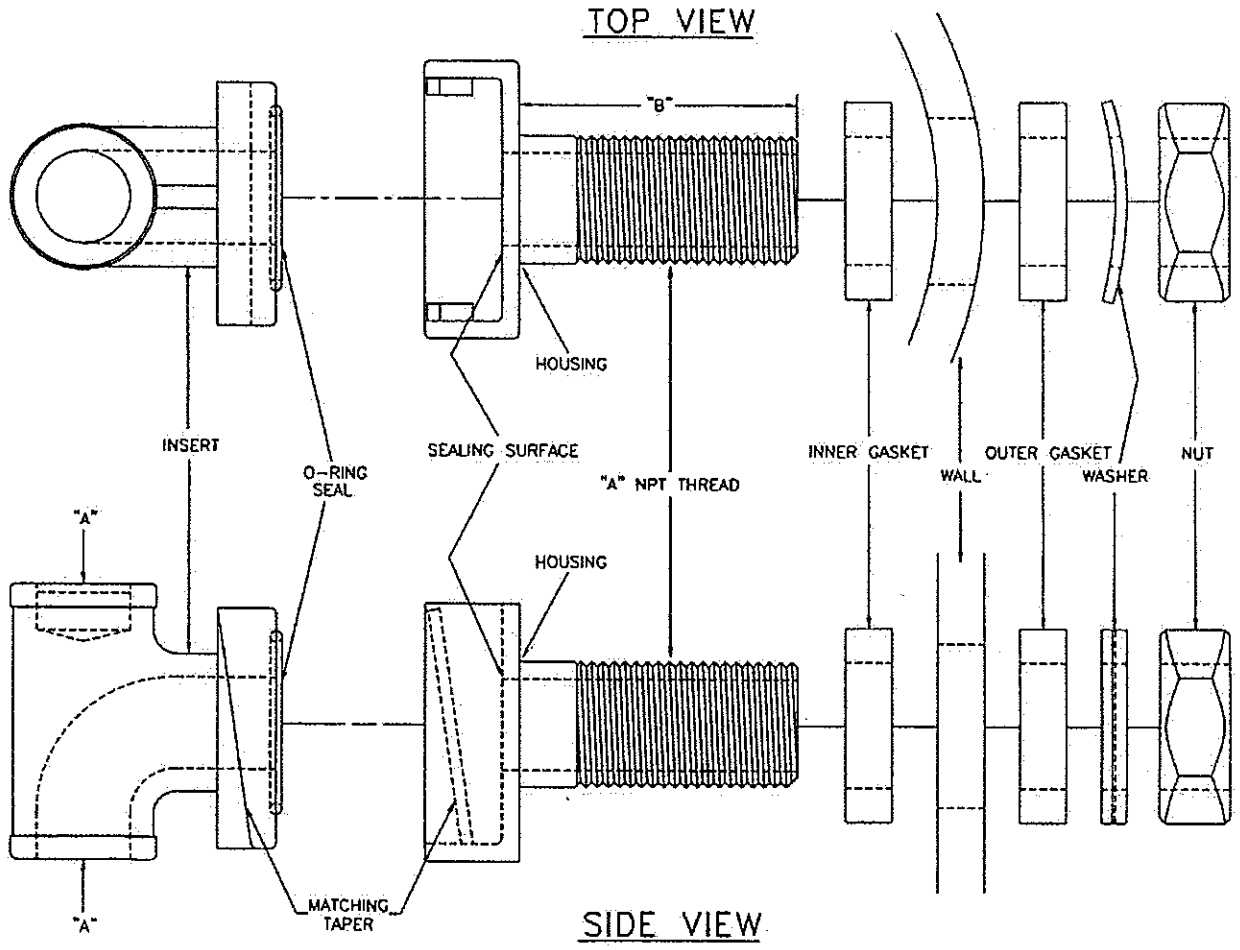

© 2014 EPG Companies Inc.

Installation Instructions - NW Disconnect

For Leachate, Monitoring, and Remediation Pumping Applications

- Using correctly sized hole saw, drill thru one wall of the riser in alignment with the force main.
- Install inner gasket on the threaded NW tail.
- Install the NW tail thru hole in riser.
- Install outside gasket, backup washer & locknut, tighten lock nut until the NW tail is secure.
- Lubricate the o-ring and install into the o-ring groove in the NW head.

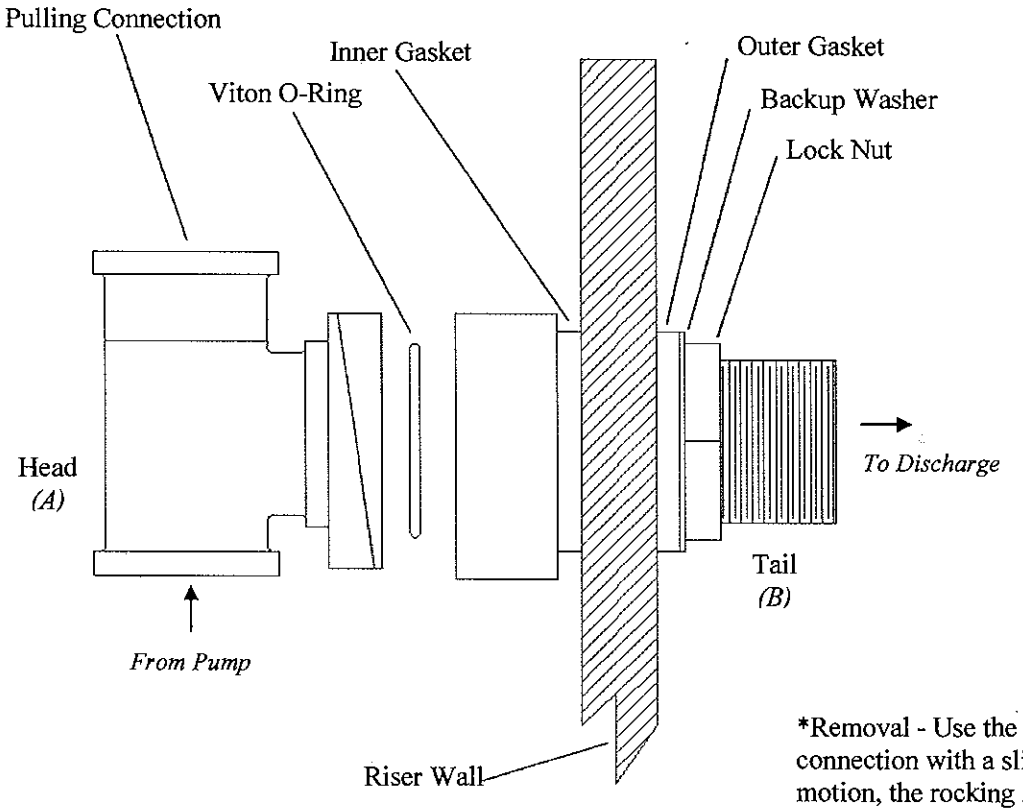

*Removal - Use the pulling connection with a slight rocking motion, the rocking motion helps unseat the taper.

MODEL	"A"	"B"	Hole Saw Size
NW1.5SS-C	1-1/2" NPT	1-1/2" NPT	2"
NW2SS-C	2" NPT	2" NPT	2-1/2"
NW3SS	3" NPT*	3" NPT	3-5/8"
NW4SS	4" NPT	4" NPT	4-3/4"

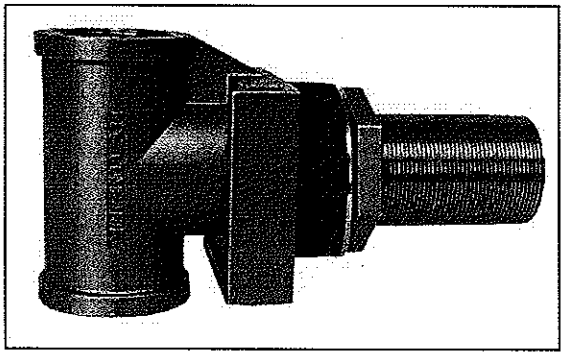

**NW3SS has 1.5" Pulling Connection*

© 2014 EPG Companies Inc.

BJBL600B

BREAKOUT JUNCTION BOX FOR LEVEL SENSOR

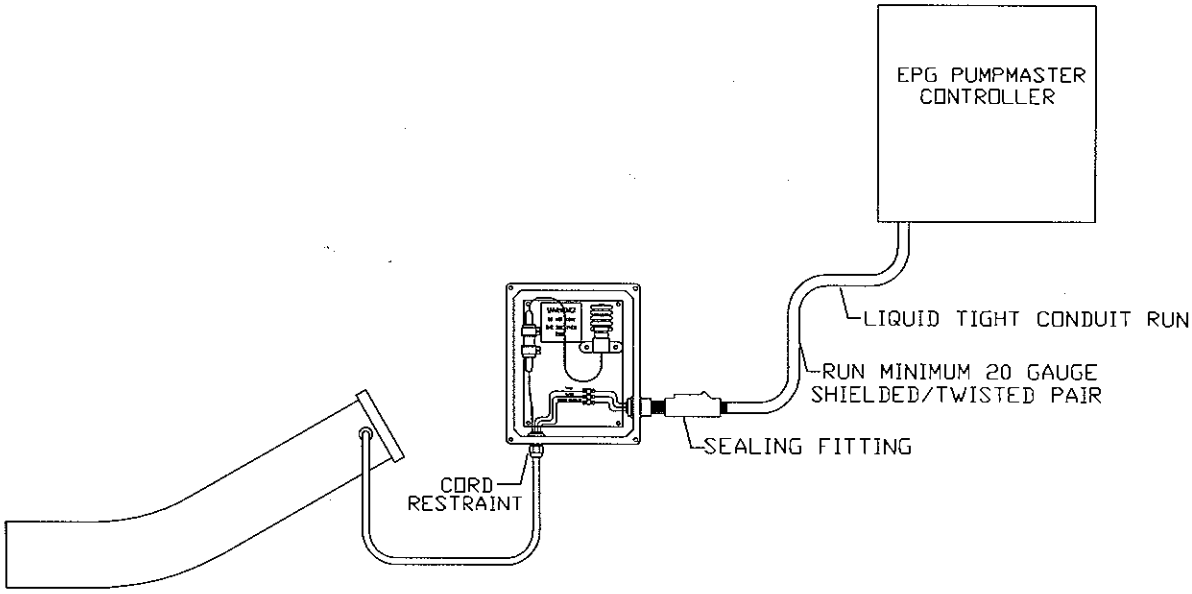

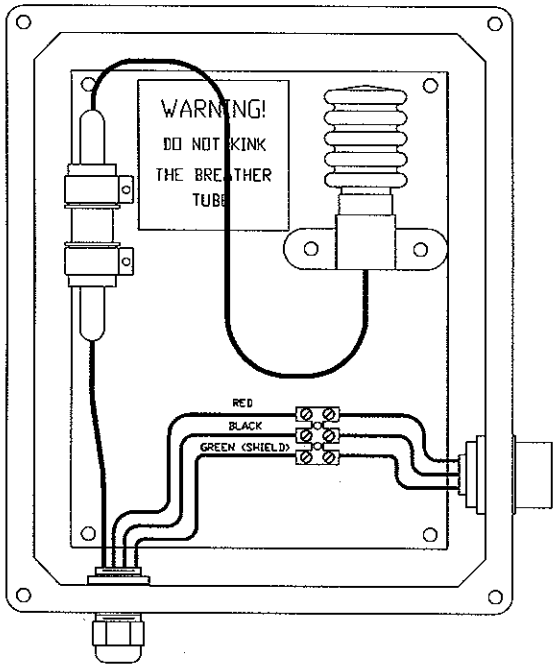

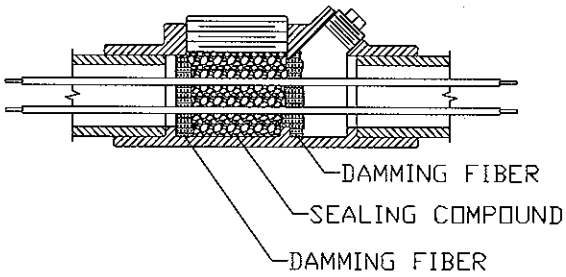

NOTE:

BOX DIMENSIONS (OUTER WALL):
10 3/4" X 8 3/4" X 6"

MOUNTING HOLES FOR 5/16" BOLT/SCREW,
12 1/8" X 6" CENTER TO CENTER, 4 PL.

* NOTICE * © EPG Companies Inc. 2002

REFERENCE

TOLERANCES (EXCEPT AS NOTED)	REVISIONS NO.	DATE	BY	EPG COMPANIES		
DECIMAL ±	1			TYPICAL INSTALLATION		
FRACTIONAL ±	2			DESIGN C.A.S.	SCALE NONE	MATERIAL
ANGULAR ±	3			DRAWN C.A.S.	DATE 05/07/02	DRAWING NO. 02523-0605
	4			CHK'D	APP'D	
	5					

BJBP500

BREAKOUT JUNCTION BOX FOR MOTOR LEAD

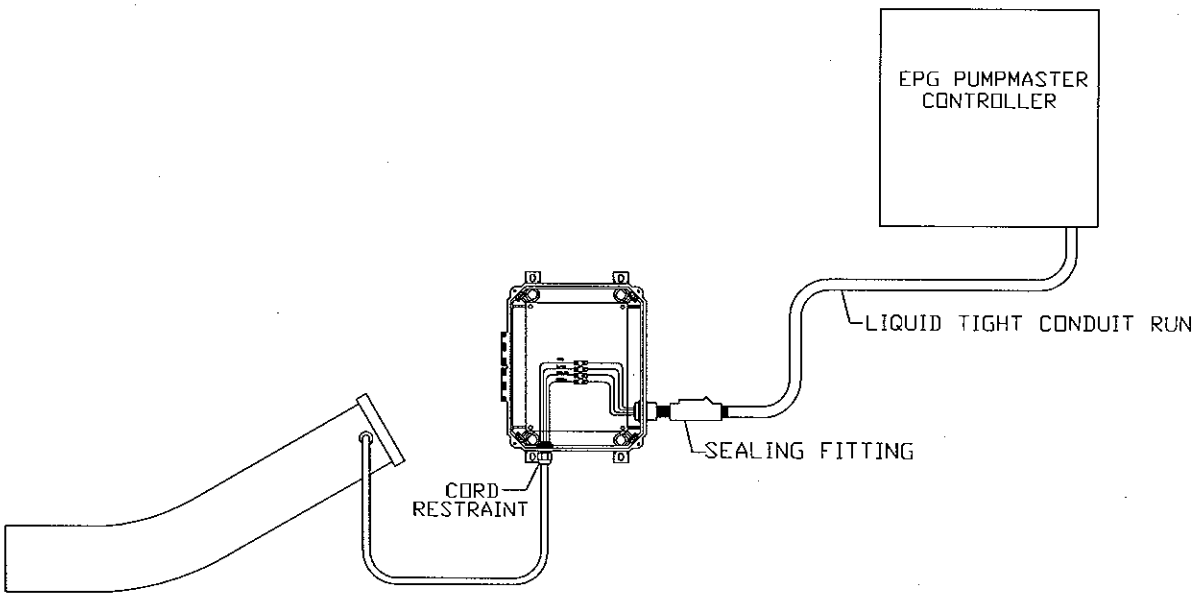

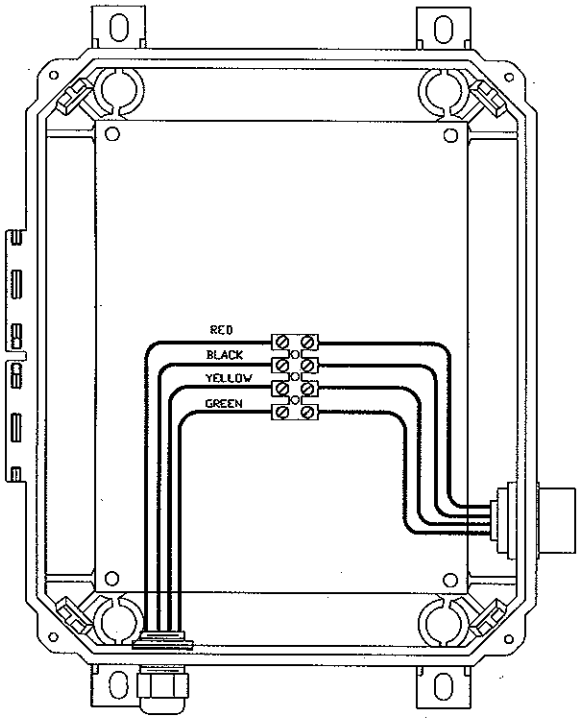

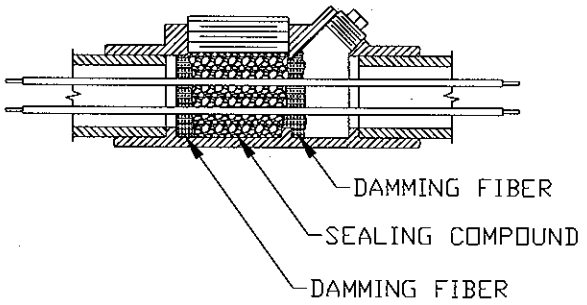

NOTE:

BOX DIMENSIONS (OUTER WALL):
10 ¾" X 8 ¾" X 6"

MOUNTING HOLES FOR 5/16" BOLT/SCREW,
12⅛" X 6" CENTER TO CENTER, 4 PL.

* NOTICE * © EPG Companies Inc. 2002
REFERENCE

TOLERANCES (EXCEPT AS NOTED)	REVISIONS NO.	DATE	BY	EPG COMPANIES		
DECIMAL ±	1			TYPICAL INSTALLATION		
	2					
FRACTIONAL ±	3			DESIGN	SCALE NONE	MATERIAL
	4			DRAWN U.E.V.	DATE 05/07/02	DRAWING NO. 03626-0500
ANGULAR ±	5			CHK'D	APP'D	

LIMITED WARRANTY

This agreement shall be deemed to have been entered into in the State of Minnesota, and shall be construed in accordance with the laws of the State of Minnesota, including Minnesota's enactment of the Uniform Commercial Code. Buyer hereby stipulates and agrees that Hennepin County, Minnesota shall be the proper jurisdiction for adjudicating all claims and controversies arising from this agreement.

Products manufactured by EPG Companies Inc. are warranted for a period of 12 months if Form 200 is returned (see Bulletin 0202), from date of installation or eighteen (18) months from date of manufacture* to be free from defects of materials and workmanship. It is expressly agreed that the exclusive remedy under this warranty is limited solely to the repair or replacement, at the sole discretion of EPG, of the part that failed. The cost of labor for any field repairs is not covered by this warranty. EPG Companies will not be liable for any damage or wear due to abnormal conditions or improper installation.

Products not manufactured by EPG Companies Inc. are covered by the original manufacturer's warranty, which EPG Companies passes through to the purchaser. The actual manufacturer will make warranty determination.

To have a defective part repaired or replaced, you must return the defective product to EPG Companies. Please call (800) 443-7426 or (763) 424-2613 to obtain a RMA number. Send defective product (freight prepaid) with RMA #, description of installation, installation data and failure date to EPG Companies Inc., 19900 County Rd. 81, Maple Grove, MN 55311.

EPG Companies will not be held liable for any incidental or consequential damages, losses or expenses incurred from installation, use or any other reason. THERE ARE NO OTHER WARRANTIES, EXPRESSED OR IMPLIED, INCLUDING IMPLIED WARRANTIES OF EITHER FITNESS FOR A PARTICULAR PURPOSE OR OF MERCHANTABILITY, WHICH EXTEND BEYOND THOSE SPECIFICALLY LISTED HERE.

If equipment is to be stored for a period greater than six months, proper storage precautions must be taken if the warranty is to be maintained. Please call EPG Companies for specific requirements regarding product storage.

The following is a partial list of items, which will void the warranty:

- Opening the motor for any reason.
- Using undersized electrical wire.
- Making unauthorized circuit changes. Please call EPG Companies before making any changes.
- Operating a three phase submersible motor from single phase power through a phase converter unless 3-leg ambient-compensated quick trip overload protectors are used and complete details are sent in writing to EPG Companies.

* To qualify for the delayed installation warranty you must contact EPG Companies Inc., at (800) 443-7426 or (763) 424-2613 within 60 days of purchase.

© 2014 EPG Companies Inc.

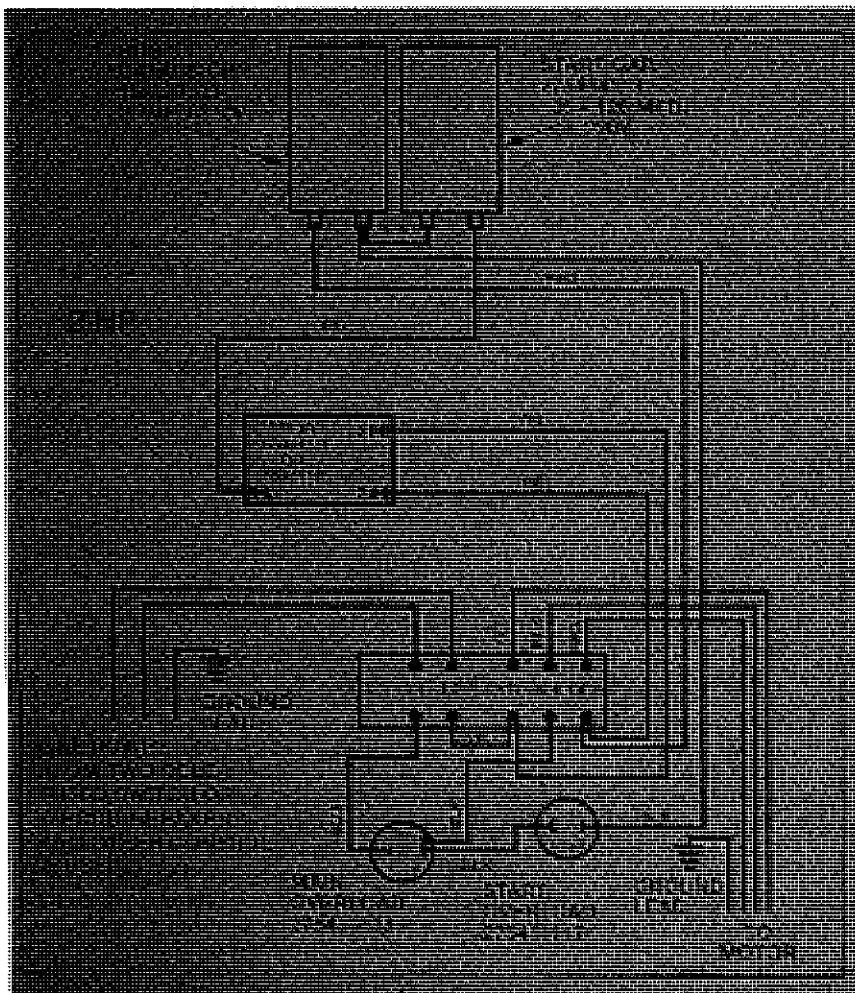

Franklin Electric

WARNING

TO PREVENT HAZARD OF FATAL OR SERIOUS ELECTRIC SHOCK

INSTALLATION AND VERIFICATION

Submersible Motor Control Boxes

Applications

QUICK DISCONNECT (QD) & CAPACITOR RUN CONTROL (CRC) – These control boxes are designed for use with Franklin 3-wire single-phase submersible motors through 1 hp.

STANDARD & DELUXE – These control boxes are designed for use with Franklin 3-wire single-phase submersible motors from 1 through 15 hp. Recommended for water systems that use pressure switches, level switches, or other pilot devices. Deluxe boxes (only) contain magnetic line contactors carefully matched to the motor rating, eliminating the need for external line contactors.

Basic Features – All Boxes

- Suitable for outdoor mounting
- Capacitor Start / Capacitor Run design (except QD boxes)
- UL Listed for US and Canada (60 Hz models)

Basic Features – Standard & Deluxe Boxes

- Heavy duty box-type terminals accept up to AWG #2 wire
- External access to overload resets
- Multiple-size knockouts
- User-friendly connection diagrams
- Easy access to grounding lugs

Single-Phase Control Box Specifications

BOX TYPE	HZ	HP RANGE	KW RANGE	ENCLOSURE	TERMINAL BLOCK		MAG CONTACTOR	AGENCY APPROVALS
					TERMINALS	MAX WIRE		
Quick Disconnect (QD)	60	1/3 - 1	0.25 - 0.75	NEMA 3R, IP23	5	AWG 10	No	UL listed for US and Canada
Quick Disconnect (QD)	50	1/3 - 1	0.25 - 0.75	NEMA 3R, IP23	5	AWG 10	No	CSA Certified
Capacitor Run Control (CRC)	60	1/2 - 1	0.37 - 0.75	NEMA 3R, IP23	5	AWG 10	No	UL listed for US and Canada
Standard (S)	60	1 - 10	0.75 - 7.5	NEMA 3R, IP23	5	AWG 2	No	UL listed for US and Canada
Standard (S)	50	1.5 - 5	0.75 - 3.7	NEMA 3R, IP23	5	AWG 2	No	CSA Certified
Deluxe (D)	60	2 - 15	1.5 - 11	NEMA 3R, IP23	6	AWG 2	Yes	UL listed for US and Canada
Extra Large Deluxe (D-XL)	60	15	11	NEMA 3R, IP23	5	AWG 00	Yes	UL listed for US and Canada

Enclosure – Quick Disconnect (QD) & Capacitor Run Control (CRC) Boxes

- **Knockouts:**
  - Bottom: Two 0.88” knockouts and one 1.31” knockout.
  - Side: One 0.88” knockout and one 1.31” knockout on each side.
- **Terminal Block:** five terminals provided for wiring up to AWG #10 wire.

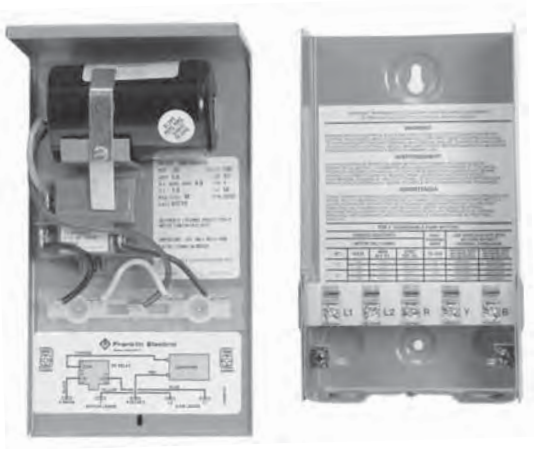

Quick Disconnect (QD) Control Boxes

HP	KW	SHIPPING WEIGHT		MOTOR CARTON SIZE (in inches)	ENC SIZE
		LBS	KG		
1/3	0.25	4	1.8	5.5 x 3.25 x 9	QD
1/2	0.37	4	1.8	5.5 x 3.25 x 9	QD
3/4	0.55	4	1.8	5.5 x 3.25 x 9	QD
1	0.75	4	1.8	5.5 x 3.25 x 9	QD

Capacitor Run Control (CRC) Boxes

HP	KW	SHIPPING WEIGHT		MOTOR CARTON SIZE (in inches)	ENC SIZE
		LBS	KG		
1/2	0.37	5	2.3	5.5 x 3.25 x 9	QD
3/4	0.55	5	2.3	5.5 x 3.25 x 9	QD
1	0.75	5	2.3	5.5 x 3.25 x 9	QD

QD Box Dimensions

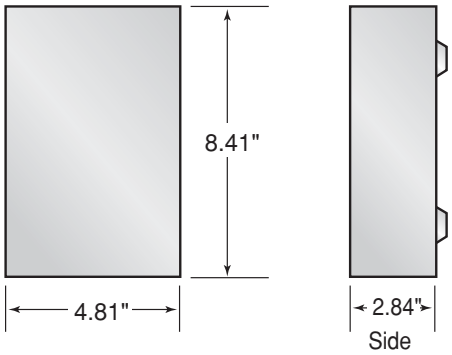

Enclosure – Standard & Deluxe Boxes

- **Knockouts:** Two 1.31” diameter holes for 1” conduit connection. One 1.75” knockout for 1.25” conduit. One 0.88” knockout for 0.5” conduit connection.
- **Terminal Block:** six terminals provided for wiring up to AWG 2 wire.

Standard Control Boxes

HP	KW	SHIPPING WEIGHT LBS	SHIPPING WEIGHT KG	MOTOR CARTON SIZE (in inches)	ENC SIZE
1.5	1.1	7	3.2	8.125 x 6.25 x 11.25	A
2	1.5	7	3.2	8.125 x 6.25 x 11.25	A
3	2.2	7	3.2	8.125 x 6.25 x 11.25	A
5 (60 Hz)	3.7	8	3.6	8.125 x 6.25 x 11.25	A
5 (50 Hz)	3.7	8	3.6	8.125 x 6.25 x 18	B
7.5	5.5	12	5.5	8.125 x 6.25 x 18	B
10	7.5	14	6.4	8.125 x 6.25 x 18	B

Standard & Deluxe Dimensions

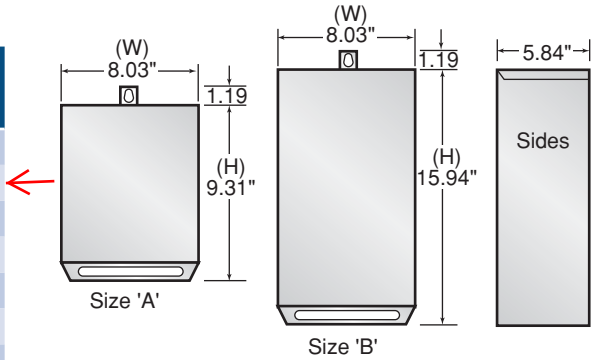

Deluxe Control Boxes

HP	KW	SHIPPING WEIGHT LBS	SHIPPING WEIGHT KG	MOTOR CARTON SIZE (in inches)	ENC SIZE
2	1.5	7.0	3.2	8.125 x 6.25 x 11.25	A
3	2.2	7.3	3.3	8.125 x 6.25 x 11.25	A
5	3.7	11.2	5.1	8.125 x 6.25 x 18	B
7.5	5.5	13.1	6.0	8.125 x 6.25 x 18	B
10	7.5	14.7	6.7	8.125 x 6.25 x 18	B
15	11	16.5	7.5	8.125 x 6.25 x 18	B
15 (XL)	11	28.0	12.7	16 x 7.125 x 19	C

Enclosure – Extra Large Deluxe (D-XL) Boxes

- **Knockouts:**
  - Bottom: two knockouts for 0.75” conduit, and two for 1.5” conduit.
  - Side: one knockout for 2” conduit.
- **Terminal Block:** two terminals provided for incoming power and three terminals provided for drop cable for conductors from AWG 14 to 00.
- **Control Switch Terminal Block:** accepts conductors from AWG 20 to 6.

Size ‘C’

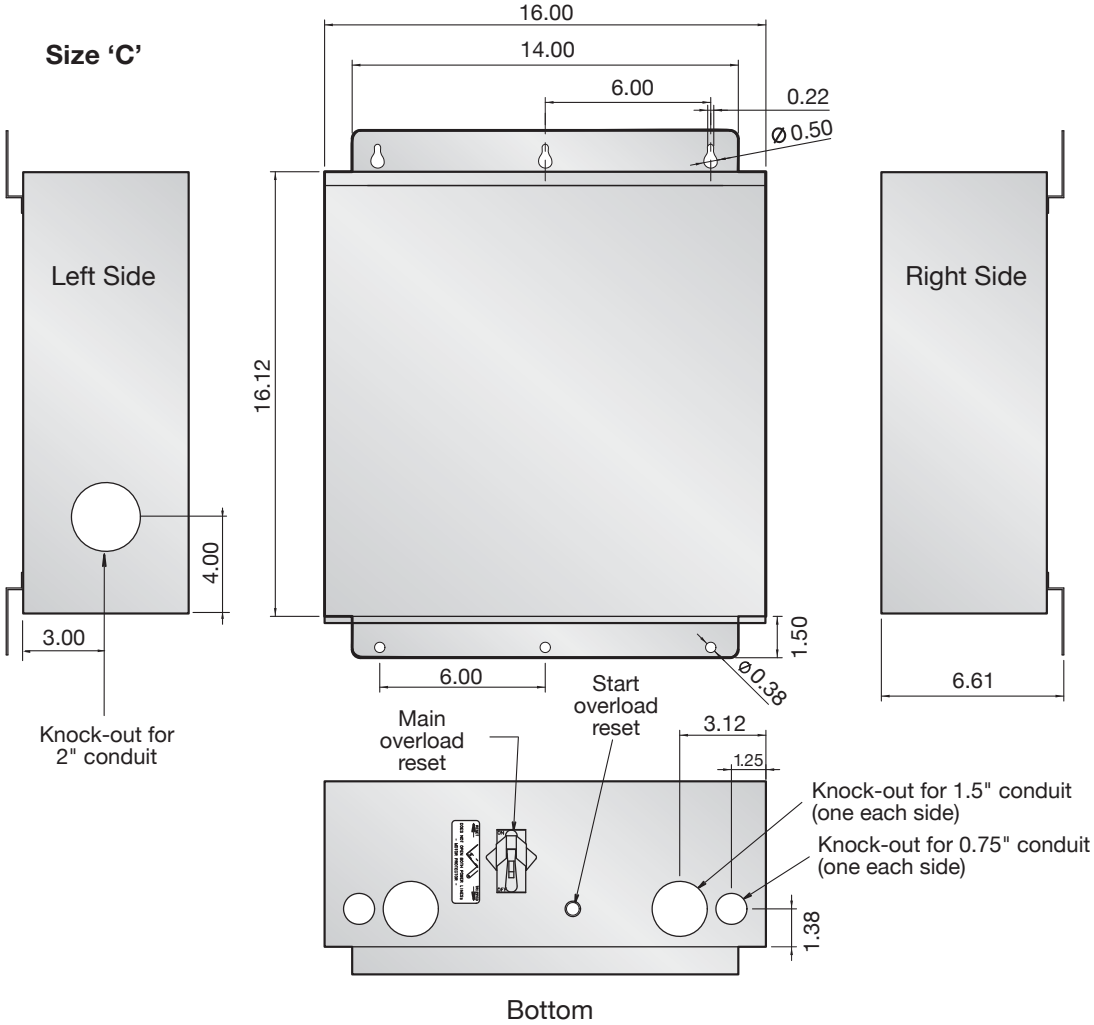

Control Box Models

HP (KW)	DESCRIPTION				MODEL	STOCK STATUS
	PH	VOLTS	HZ	TYPE		
1/3 hp (0.25 kW)	1P	115	60	Q	280 102 4915	YES
	1P	220	50	Q	280 353 0115	
	1P	230	60	Q	280 103 4915	YES
1/2 hp (0.37 kW)	1P	115	60	Q	280 104 4915	YES
	1P	220	50	Q	280 355 0115	YES
	1P	230	60	Q	280 105 4915	YES
	1P	230	60	CRC	282 405 5015	YES
3/4 hp (0.55 kW)	1P	220	50	Q	280 357 0115	YES
	1P	230	60	Q	280 107 4915	YES
	1P	230	60	CRC	282 407 5015	YES
1 hp (0.75 kW)	1P	220	50	Q	280 358 0115	YES
	1P	230	60	Q	280 108 4915	YES
	1P	230	60	CRC	282 408 5015	YES
1.5 hp (1.1 kW)	1P	220	50	S	282 350 8110	YES
	1P	230	60	S	282 300 8110	YES
2 hp (1.5 kW)	1P	220	50	S	282 351 8110	YES
	1P	230	60	S	282 301 8110	YES
	1P	230	60	D	282 301 8310	YES
3 hp (2.2 kW)	1P	220	50	S	282 352 8110	YES
	1P	230	60	S	282 302 8110	YES
	1P	230	60	D	282 302 8310	YES
5 hp (3.7 kW)	1P	220	50	S	282 253 9010	YES
	1P	230	60	S	282 113 8110	YES
	1P	230	60	D	282 113 9310	YES
7.5 hp (5.5 kW)	1P	230	60	S	282 201 9210	YES
	1P	230	60	D	282 201 9310	YES
10 hp (7.5 kW)	1P	230	60	S	282 202 9230	YES
	1P	230	60	D	282 202 9330	YES
15 hp (11 kW)	1P	230	60	D	282 203 9330	YES
	1P	230	60	D-XL	282 203 9621	YES

NOTES:

Q = Quick Disconnect Control Box
CRC = Capacitor Run Control Box
S = Standard Control Box
D = Deluxe Control Box
D-XL = Extra Large Deluxe Control Box

Control Box Parts

QD Control Box Parts - 60 Hz

HP Voltage Model No.	Rating	No. Req.	Component Part No.	Kit Order No.
1/3 hp - 115 V 280 102 4915	Start Capacitor 159-191 MFD, 110 V	1	275 464 125	305 207 925
	QD Relay	1	223 415 905	305 101 905
1/3 hp - 230 V 280 103 4915	Start Capacitor 43-53 MFD, 220 V	1	275 464 126	305 207 926
	QD Relay	1	223 415 901	305 101 901
1/2 hp - 115 V 280 104 4915	Start Capacitor 250-300 MFD, 125 V	1	275 464 201	305 207 951
	QD Relay	1	223 415 906	305 101 906
1/2 hp - 230 V 280 105 4915	Start Capacitor 59-71 MFD, 220 V	1	275 464 105	305 207 905
	QD Relay	1	223 415 902	305 101 902
3/4 hp - 230 V 280 107 4915	Start Capacitor 86-103 MFD, 220 V	1	275 464 118	305 207 918
	QD Relay	1	223 415 903	305 101 903
1 hp - 230 V 280 108 4915	Start Capacitor 105-126 MFD, 220 V	1	275 464 113	305 207 913
	QD Relay	1	223 415 904	305 101 904
1/2 hp - 230 V CRC 282 405 5015	Start Capacitor 43-53 MFD, 220 V	1	275 464 126	305 207 926
	Run Capacitor 15 MFD, 370 V	1	156 362 101	305 203 907
	QD Relay	1	223 415 912	305 105 901
3/4 hp - 230 V CRC 282 407 5015	Start Capacitor 59-71 MFD, 220 V	1	275 464 105	305 207 905
	Run Capacitor 23 MFD, 370 V	1	156 362 102	305 203 908
	QD Relay	1	223 415 913	305 105 902
1 hp - 230 V CRC 282 408 5015	Start Capacitor 86-103 MFD, 220 V	1	275 464 118	305 207 918
	Run Capacitor 23 MFD, 370 V	1	156 362 102	305 203 908
	QD Relay	1	223 415 914	305 105 903

QD Control Box Parts - 50 Hz

HP Voltage Model No.	Rating	No. Req.	Component Part No.	Kit Order No.
1/3 hp - 220 V 280 353 0115	Start Capacitor 43-53 MFD, 220 V	1	275 461 123	305 205 923
	Capacitor Overload Assembly	1	151 033 957	305 218 957
	Relay 220 V	1	155 031 112	305 213 912
1/2 hp - 220 V 280 355 0115	Start Capacitor 43-53 MFD, 220 V	1	275 461 123	305 205 923
	Capacitor Overload Assembly	1	151 033 957	305 218 957
	Relay 220 V	1	155 031 112	305 213 912
3/4 hp - 220 V 280 357 0115	Start Capacitor 59-71 MFD, 220 V	1	275 461 108	305 205 908
	Capacitor Overload Assembly	1	151 033 918	305 218 918
	Relay 220 V	1	155 031 112	305 213 912
1 hp - 220 V 280 358 0115	Start Capacitor 86-103 MFD, 220V	1	275 461 106	305 205 906
	Capacitor Overload Assembly	1	151 033 906	305 218 906
	Relay 220 V	1	155 031 112	305 213 912

Replacement Parts for Older Style QD Control Boxes

Description	Rating	No. Req.	Component Part No.	Kit Order No.
Voltage Relay Kit	115 Volt with bracket and screws	1	155 031 901	305 102 901
	230 Volt with bracket and screws	1	155 031 902	305 102 902
	208 Volt with bracket and screws	1	155 031 903	305 102 903
Capacitor Overload Assembly	1/3 hp, 115 Volt	1	151 033 973	305 218 973
	1/3 hp, 230 Volt	1	151 033 974	305 218 974
	1/2 hp, 115 Volt	1	151 033 975	305 218 975
	1/2 hp, 230 Volt	1	151 033 976	305 218 976
	3/4 hp, 230 Volt	1	151 033 978	305 218 978
	1 hp, 230 Volt	1	151 033 979	305 218 979
	1.5 hp, 230 Volt	1	151 033 980	305 218 980
Overload Kit	1/3 hp, 115 Volt	1	NA	305 100 901
	1/3 hp, 230 Volt	1	NA	305 100 902
	1/2 hp, 115 Volt	1	NA	305 100 903
	1/2 hp, 230 Volt	1	NA	305 100 904
	3/4 hp, 230 Volt	1	NA	305 100 905
	1 hp, 230 Volt	1	NA	305 100 906

NOTE: Some Franklin motors, controls & parts are not stock items and may need to be special ordered.

Control Box Parts

Standard Control Box Parts - 60 Hz

HP Size Model No.	Rating	No. Req.	Component Part No.	Kit Order No.
1/1.5 hp - 4" 282 300 8110	Start Capacitor 105-126 MFD, 220 V	1	275 464 113	305 207 913
	Run Capacitor 10 MFD, 370 V	1	155 328 102	305 204 902
	Overload	1	275 411 107	305 215 907
	Relay - 230 V*	1	155 031 102	305 213 902
2 hp - 4" 282 301 8110	Start Capacitor 105-126 MFD, 220 V	1	275 464 113	305 207 913
	Run Capacitor 20 MFD, 370 V	1	155 328 103	305 204 903
	Start Overload	1	275 411 117	305 215 917
	Run Overload	1	275 411 113	305 215 913
	Relay - 230 V*	1	155 031 102	305 213 902
3 hp - 4" 2823028110	Start Capacitor 208-250 MFD, 220 V	1	275 463 111	305 206 911
	Run Capacitor 45 MFD, 370 V	1	155 327 109	305 203 909
	Start Overload	1	275 411 118	305 215 918
	Run Overload	1	275 411 115	305 215 915
	Relay - 230 V*	1	155 031 102	305 213 902
5 hp - 4" & 6" 282 113 8110	Start Capacitor 270-324 MFD, 330 V	1	275 468 119	305 208 919
	Run Capacitor 40 MFD, 370 V	2	155 327 114	305 203 914
	Start Overload	1	275 411 119	305 215 919
	Run Overload	1	275 406 102	305 214 902
	Relay - 230V*	1	155 031 601	305 213 961
7.5 hp - 6" 282 201 9210	Start Capacitor 270-324 MFD, 330 V	1	275 468 119	305 208 919
	Start Capacitor 216-259 MFD, 330 V	1	275 468 118	305 208 918
	Run Capacitor 45 MFD, 370 V	1	155 327 109	305 203 909
	Start Overload	1	275 411 102	305 215 902
	Run Overload	1	275 406 122	305 214 922
	Relay - 230V*	1	155 031 601	305 213 961
10 hp - 6" 282 202 9230	Start Capacitor 270-324 MFD, 330 V	1	275 468 119	305 208 919
	Start Capacitor 130-154 MFD, 330 V	1	275 463 120	305 206 920
	Start Capacitor 216-259 MFD, 330 V	1	275 468 118	305 208 918
	Run Capacitor 35 MFD, 370 V	2	155 327 102	305 203 902
	Start Overload	1	275 406 103	305 214 903
	Run Overload	1	155 409 101	155 409 101
	Relay - 230V*	1	155 031 601	305 213 961
All	Lightning Arrestor	1	150 814 902	150 814 902
208 V Relay *	Relay 1.5-3 hp (replaces 155031102)	1	155 031 103	305 213 903
	Relay 5-15 hp (replaces 155031601)	1	155 031 602	305 213 904

Standard Control Box Parts - 50 Hz

HP Voltage Model No.	Rating	No. Req.	Component Part No.	Kit Order No.
1.5 hp - 220 V 282 350 8110	Start Capacitor 105-126 MFD, 220 V	1	275 464 113	305 207 913
	Run Capacitor 10 MFD, 370 V	1	155 328 102	305 203 909
	Overload Assembly - Run	1	275 411 114	305 215 914
	Relay 220 V	1	155 031 112	305 213 912
2 hp - 220 V 282 351 8110	Start Capacitor 189-227 MFD, 220 V	1	275 468 115	305 208 915
	Run Capacitor 20 MFD, 370V	1	155 328 103	305 204 903
	Overload Assembly - Run	1	275 411 102	305 215 902
	Overload Assembly - Start	1	275 411 106	305 215 906
	Relay 220 V	1	155 031 112	305 213 912
3 hp - 220 V 282 352 8110	Start Capacitor 270-324 MFD, 220 V	1	275 468 119	305 208 919
	Run Capacitor 35 MFD, 370 V	1	155 327 102	305 203 902
	Overload Assembly - Run	1	275 406 107	305 214 907
	Overload Assembly - Start	1	275 411 107	305 215 907
	Relay 220 V	1	155 031 112	305 213 912
5 hp - 220 V 282 253 9010	Start Capacitor 189-227 MFD, 220 V	2	275 468 115	305 208 915
	Run Capacitor 30 MFD, 220 V	1	155 327 101	305 203 901
	Run Capacitor 45 MFD, 220 V	1	155 327 109	305 203 909
	Overload Assmbly - Run	1	275 406 102	305 214 902
	Overload Assembly - Start	1	275 411 102	305 215 902
	Relay 220 V	1	155 031 112	305 213 912

NOTE: Some Franklin motors, controls and parts are not stock items and may need to be special ordered.

* For 208 V systems or where line voltage is between 200 V and 210 V a low voltage relay and larger cable are required:

- Use relay part number 155 031 103 in place of 155 031 102 on 1.5 through 3 hp applications.
- Use relay 115 031 602 for 5-15 hp applications.
- Use the next size larger cable than is specified in the 230 V table.
- Boost transformers are an alternative to special relay and cable.

Control Box Parts

Deluxe Control Box Parts

HP Size Model No.	Rating		No. Req.	Component Part No.	Kit Order No.
2 hp - 4" 282 301 8310	Start Capacitor	105-126 MFD, 220 V	1	275 464 113	305 207 913
	Run Capacitor	20 MFD, 370 V	1	155 328 103	305 204 903
	Start Overload		1	275 411 117	305 215 917
	Run Overload		1	275 411 113	305 215 913
	Contactor		1	155 325 102	305 226 901
	Relay - 230 V*		1	155 031 102	305 213 902
3 hp - 4" 282 302 8310	Start Capacitor	208-250 MFD, 220 V	1	275 463 111	305 206 911
	Run Capacitor	45 MFD, 370 V	1	155 327 109	305 203 909
	Start Overload		1	275 411 118	305 215 918
	Run Overload		1	275 411 115	305 215 915
	Contactor		1	155 325 102	305 226 901
	Relay - 230 V*		1	155 031 102	305 213 902
5 hp - 4" & 6" 282 113 9310	Start Capacitor	270-324 MFD, 330 V	1	275 468 119	305 208 919
	Run Capacitor	40 MFD, 370 V	2	155 327 114	305 203 914
	Start Overload		1	275 411 119	305 215 919
	Run Overload		1	275 406 102	305 214 902
	Contactor		1	155 326 101	305 347 903
	Relay - 230 V*		1	155 031 601	305 213 961
7.5 hp - 6" 282 201 9310	Start Capacitor	270-324 MFD, 330 V	1	275 468 119	305 208 919
	Start Capacitor	216-259 MFD, 330 V	1	275 468 118	305 208 918
	Run Capacitor	45 MFD, 370 V	1	155 327 109	305 203 909
	Start Overload		1	275 411 102	305 215 902
	Run Overload		1	275 406 121	305 214 921
	Contactor		1	155 326 102	305 347 902
	Relay - 230 V*		1	155 031 601	305 213 961
10 hp - 6" 282 202 9330	Start Capacitor	270-324 MFD, 330 V	1	275 468 119	305 208 919
	Start Capacitor	130-154 MFD, 330 V	1	275 463 120	305 206 920
	Start Capacitor	216-259 MFD, 330 V	1	275 468 118	305 208 918
	Run Capacitor	35 MFD, 370 V	2	155 327 102	305 203 902
	Start Overload		1	275 406 103	305 214 903
	Run Overload		1	155 409 101	155 409 101
	Contactor		1	155 326 102	305 347 902
	Relay - 230 V*		1	155 031 601	305 213 961
15 hp - 6" 282 203 9330	Start Capacitor	270-324 MFD, 330 V	2	275 468 119	305 208 919
	Start Capacitor	161-193 MFD, 330 V	1	275 463 122	305 206 912
	Run Capacitor	45 MFD, 370 V	3	155 327 109	305 203 909
	Start Overload		1	275 406 103	305 214 903
	Run Overload		1	155 409 102	155 409 102
	Contactor		1	155 429 101	305 347 901
	Relay - 230 V*		1	155 031 601	305 213 961
15 hp - 6" 282 203 9621 X-Large Enclosure	Start Capacitor	350-420 MFD, 330 V	2	275 468 120	305 208 920
	Run Capacitor	45 MFD, 370 V	3	155 327 109	305 203 909
	Start Overload		1	275 406 103	305 214 903
	Run Overload		1	155 409 102	155 409 102
	Contactor		1	155 429 101	305 347 901
	Relay - 230 V*		2	155 031 601	305 213 961
All	Lightning Arrestor		1	150 814 902	150 814 902
208 V Relay*	Relay 1.5-3 hp (replaces 155 031 102)		1	155 031 103	305 213 903
	Relay 5-15 hp (replaces 155 031 601)		1	155 031 602	305 213 904

NOTE: Some Franklin motors, controls & parts are not stock items and may need to be special ordered.

* For 208 V systems or where line voltage is between 200 V and 210 V a low voltage relay and larger cable are required:

- Use relay part number 155 031 103 in place of 155 031 102 on 1.5 through 3 hp applications.
- Use relay 115 031 602 for 5-15 hp applications.
- Use the next size larger cable than is specified in the 230 V table.
- Boost transformers are an alternative to special relay and cable.

Appendix G
State of Illinois Exotic Upland and Wetland Plants

EXOTIC, INVASIVE PLANTS IN ILLINOIS HABITATS

GRASSLANDS: Prairies, Roadsides, Fencelines, Right-of-ways...

Crown Vetch
(Coronilla varia)
Photo: Mike Garrett

Multiflora Rose
(Rosa multiflora)
Photo: Mike Garrett

Teasel
(Dipsacus syvestris, D. laciniatus)
Photo: Chris Evans

Sweet Clover
(Melilotus alba, M. officinalis)
Photo: Mike Garrett

Spotted Knapweed
(Centaurea biebersteinii)
Photo: Leslie J. Mehrhoff

Leafy Spurge
(Euphorbia esula)
Photo: William M. Ciesla

Common Reed
(Phragmites australis)
Photo: Ohio State Weed Lab

Reed Canarygrass
(Phalaris arundinacea)
Photo: Mike Garrett

Giant Hogweed
(Heracleum mantegazzianum)
Photo: Donna R. Ellis

Sericea Lespedeza
(Lespedeza cuneata)
Photo: James H. Miller

MAP KEY: = Widespread = Occassional / Rare = Absent

For more information on invasive plants visit the Illinois CAPS website at: www.inhs.uiuc.edu/research/CAPS/

USDA

EXTENSION

RIVER TO RIVER

Illinois Department of Agriculture

ILLINOIS NATURAL HISTORY SURVEY

EXOTIC, INVASIVE PLANTS IN ILLINOIS GRASSLANDS

Illinois was once dominated by large continuous stretches of prairie throughout the state. Many of the plants that made up the prairies have since retreated to remnant pockets and along roadsides, railroads, and right-of-ways. These areas are continually invaded by new plants being sown or transported by humans, animals, and vehicles.

Crown Vetch *(Coronilla varia)*: Perennial. **Native to:** Europe, Southeast Asia, and Northern Africa. **Distribution:** Found along roadways and waterways, but is invading prairies, pastures, woodland edges, and open areas. **ID Keys:** Herbaceous legume with creeping stems 2 to 6' long. Leaflets of 15 to 25 oblong leaves arranged alternately on stem. Flower clusters are pinkish-purple to white in color and are present from May through August. **Importance:** Fast establishment and rapid vegetative growth cause it to displace native vegetation**.**

Multiflora Rose *(Rosa multiflora)*: Perennial. **Native to:** Japan, Korea, and Eastern China. **Distribution:** Found in fields, pastures, and roadsides. It also may occur in dense forests, particularly near disturbances such as treefall gaps. **ID Keys:** Thorny shrub with arching stems. Leaves are divided into 5 to 11 toothed leaflets with fringed stipules. White to pinkish flowers appear in May with red 'hips' that persist through winter. **Importance:** Grows aggressively and displaces native shrubs and herbs. Degrades habitat for wildlife and grazing areas.

White and Yellow Sweet Clover *(Melitotus alba, M. officinalis)*: Biennial. **Native to:** Europe. **Distribution:** Along roadways, ditches, pastures, and open areas. **ID Keys:** Herbaceous plant that grows to be 3 to 5' tall in bush-like form. Three finely toothed leaflets are alternately arranged on the stem. First year plants do not flower. Second year plants produce fragrant yellow or white flowers in spring to early summer. **Importance:** Displaces native vegetation**.**

Common and Cutleaf Teasel *(Dipsacus syvestris, D. laciniatus)*: Biennial. **Native to:** Europe. **Distribution:** Found along roadsides and disturbed areas. **ID Keys:** Grows as a basal rosette for first year then sends up a tall flowering stalk 6 to 7' tall. Rosette leaves are oval to oblong and quite hairy. Flowering plants have large, oblong, opposite, sessile leaves that are prickly, stems also are prickly. Flowers are small and packed into dense oval-shaped heads with white or purple flower clusters. **Importance:** Lack of natural enemies allows teasel to proliferate. Teasel can quickly can form large monocultures excluding all native vegetation.

Leafy Spurge *(Euphorbia esula)*: Perennial. **Native to:** central and eastern Europe, western Asia. **Distribution:** Prairies, rangeland, pastures, along streams and open woodlands. **ID Keys:** Herbaceous plant that exudes milky sap. Leaves are alternate, opposite, and/or whorled around stem. Leaves are lance shaped and are 3/4 to 2 3/4" long and 1/10 to 1/5" wide with smooth margins. Greenish-yellow clusters of flowers are at the ends of most branches and stems. **Importance:** *Federal Noxious Weed.* Roots exude allelochemicals that deter the growth of other plants, decreasing plant diversity. The plants also produce a milky sap that irritates animals and is poisonous to most livestock. May also cause a rash on humans.

Common Reed *(Phragmites australis)*: Perennial. **Native to:** Europe. **Distribution:** In riparian areas, flood plains, and ditches. Prefers moist, well-drained soil. **ID Keys:** Grass that reaches 12' tall that spreads via rhizomes and stolons. Leaf blades are 3/4 to 3" wide, hairy, long, and taper near stem. **Importance:** Crowds out native species, diminishes habitats for wildlife, and increases flooding due to water impediment**.**

Spotted Knapweed *(Centaurea biebersteinii):* Biennial. **Native to:** Europe. **Distribution:** Pastures and rangeland, establishes readily on disturbed ground. **ID Keys:** Leaves of first year rosette compound with irregular lobes. Leaves are 2 to 6" long, alternately arranged, hairy, and have translucent dots. Lower leaves are divided, while upper leaves are not. Purplish disc flowers. **Importance:** Drought tolerant due to deep taproot which also aids in increasing erosion, surface runoff, and stream sedimentation. Produces allelochemicals (catechins) that remain in the soil, making restoration difficult.

Reed Canarygrass *(Phalaris arundinacea)*: Perennial. **Native to:** Eurasia and Northwestern United States. **Distribution:** Wetlands including marshes, wet prairies, wet meadows, fens, stream banks, and swales. **ID Keys:** Grass that grows 2 to 6' tall. Erect, hairless stems with leaf blades are 1/4 to 1/3" wide, gradually tapering, up to 10" long. It has a transparent ligule (a membrane where blade and sheath meet). Densely clustered green to purple changing to beige flowers from May to mid-June. **Importance:** Out competes native species by forming dense stands. Invasion associated with disturbance. It has been planted widely for forage and for erosion control. Foreign genotypes out-compete native ones.

Giant Hogweed *(Heracleum mantegazzianum)*: Perennial. **Native to:** Caucasus Mountains between Europe and Asia. **Distribution:** Rich moist soils of flood plains and streambanks. **ID Keys:** Herbaceous plant reaching 8 to 15' tall. Hollow stems that are 2 to 4" diameter with purple blotches and coarse white hairs that encircle the stem at the base of the leaf. Leaves are lobed and deeply incised and can reach 5' in diameter. Large umbrella shaped flower clusters. **Importance:** *Federal Noxious Weed.* Outcompetes native vegetation and causes increased erosion along streambanks; most importantly causes severe skin irritation upon contact.

Sericea Lespedeza *(Lespedeza cuneata)*: Perennial. **Native to:** Eastern Asia. **Distribution:** Found along roadsides and in disturbed open areas, in addition to borders of ponds, swamps, and meadows. **ID Keys:** Legume with herbaceous to woody stems which reach 3 to 6' tall. Erect leafy branches that are ashy to green in color. Leaves are compound and composed of three leaflets. Creamy yellow flowers are present from late July through October. **Importance:** Invades and displaces native vegetation. Unpalatable to livestock**.**

Invasive plants have the ability to thrive and spread aggresively outside of their natural range. While some invasive plants tend to be more aggressive than others, it remains equally important to be able to correctly identify and manage the invasive plant before it begins to cause damage to the ecosystem, humans, or animals.

What can you do? Prevent establishment of invasive plants by using only native or non-invasive plants in the landscape. Learn to identify locally important invasive plants. Once they are identified, you can proceed by determining the best strategy for removal. Not all plants can be removed the same way, so be sure to ask questions on how to specifically remove the invasve plants you have. Replace the invasive plants with non-invasive and native plants to prevent re-establishment. Increased awareness of invasive plants will aid in slowing the spread.

Please visit our website at *www.inhs.uiuc.edu/research/CAPS/* or email invasives@inhs.uiuc.edu for more information on invasives.

EXOTIC, INVASIVE PLANTS IN ILLINOIS HABITATS

AQUATIC AREAS: Wetlands, Lakes, Streams, Rivers, Marshes...

Water Hyacinth
(Eichornia crassipes)
Photo: Leslie J. Mehrhoff

Eurasian Watermilfoil
(Myriophyllum spicatum)
Photo: Allison Jazz

Watercress
(Nasturtium officinale, N. microphyllum)
Photo: Richard Old

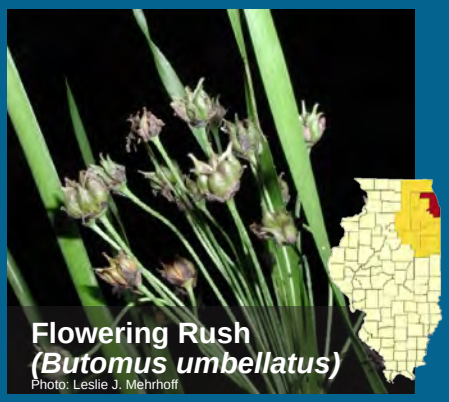

Flowering Rush
(Butomus umbellatus)
Photo: Leslie J. Mehrhoff

Curly Leaf Pondweed
(Potamogeton crispus)
Photo: Chris Evans

Brazilian Elodea
(Egeria densa)
Photo: Richard Old

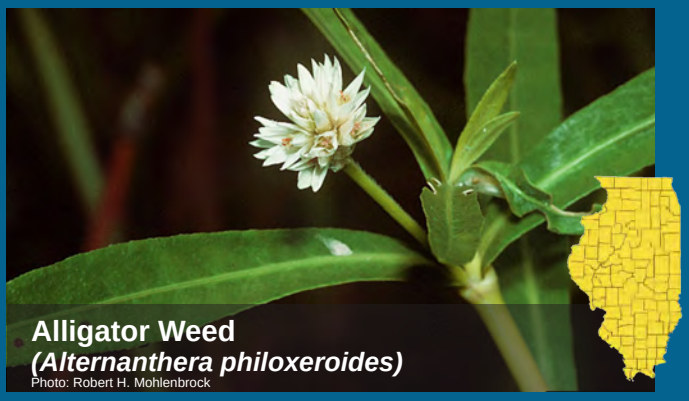

Alligator Weed
(Alternanthera philoxeroides)
Photo: Robert H. Mohlenbrock

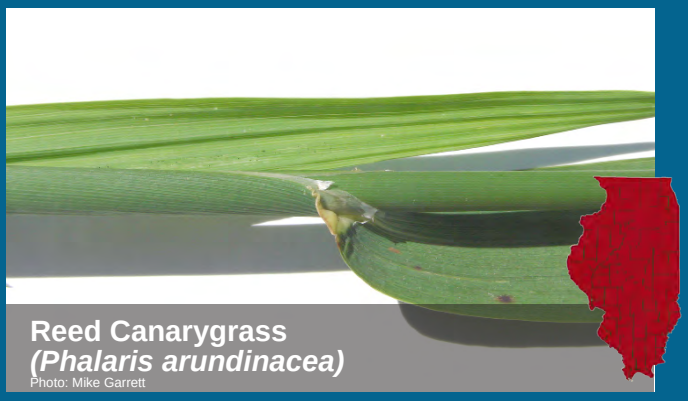

Reed Canarygrass
(Phalaris arundinacea)
Photo: Mike Garrett

Purple Loosetrife
(Lythrum salicaria)
Photo: John D. Byrd, Mississippi State University

Hydrilla
(Hydrilla verticillata)
Photo: Chris Evans

MAP KEY: = Widespread = Occassional / Rare = Absent

For more information on invasive plants visit the Illinois CAPS website at: www.inhs.uiuc.edu/research/CAPS/

USDA

EXTENSION

RIVER TO RIVER Cooperative Weed Management Area

Illinois Department of Agriculture

ILLINOIS NATURAL HISTORY SURVEY

EXOTIC, INVASIVE PLANTS IN ILLINOIS WETLANDS

Wetlands are important habitat types in Illinois for wildlife as well as protecting against flooding and recharging groundwater sources. Development and land-use change in Illinois has left natural wetlands as a rare habitat type; less that 10% of pre-settlement wetlands still exist. Much of it has been converted to urban and agriculture uses or dammed for creating lakes and other engineering projects.

Eurasian Watermilfoil (*Myriophyllum spicatum* L.): Perennial. **Native to:** Eurasia and northern Africa. **Distribution:** Still or slow moving water, but occasionally in faster moving water of streams and rivers. Thrives in shallow water with ample light penetration. **ID Keys:** Submersed plant with stems up to 12' long. Usually only immersed when flowering or water level low. Leaves are finely dissected with a whorled arrangement around stem. Spreads by rhizomes or fragmentation. **Importance:** Impedes water flow and displaces natural aquatic vegetation.

Curlyleaf Pondweed *(Potamogeton crispus)*: Perennial. **Native to:** Eurasia. **Distribution:** Found floating or submerged in shallow waters of lakes, streams, rivers, reservoirs, ditches, and marshes. **ID Keys:** Leaves are smooth, alternate, and elliptical, 1/2" wide and 2 to 3" long. Leaf margins are wavy and have a prominent midrib. **Importance:** Inhibits water flow in drainage or irrigation ditches and canals; hybridizes with native species.

Hydrilla *(Hydrilla verticillata)*: Perennial. **Native to:** Africa, Asia, and Australia. **Distribution:** Found at depths of up to 20' or more of fresh, slow-moving, or still water. **ID Keys:** Submerged plant with leaves whorled around stem in groups of 3 to 8. Leaves 5/8" long and very narrow, directly attached to stem, margins are slightly toothed. **Importance:** *Federal Noxious Weed.* Forms a dense, mat-like stand that not only outcompetes native vegetation, but also destroys fish & wildlife habitat and acts as a breeding ground for mosquitoes; may cause water flow impediment and subsequent flooding.

Alligator Weed *(Alternanthera philoxeroides)*: Perennial. **Native to:** South America. **Distribution:** Grows over still water and on wet banks; can withstand some salinity and some extended immersion in flooded conditions. **ID Keys:** Stems are smooth and can be single or branched. Leaves are opposite, attached to stem, waxy, lanceolate, 1 1/2 to 4 1/2" long, and 1/2 to 1" wide with entire margins. **Importance:** Forms a dense mat over the surface of lakes, ponds, and canals restricting light to animals and plants below, thus altering water temperatures and oxygen content. Creates an ideal breeding ground for mosquitoes.

Water Hyacinth *(Eichornia crassipes)*: Perennial. **Native to:** South America. **Distribution:** Prefers still and slow moving waters where it can put down roots in sediments. **ID Keys:** Floating plant with thick, glossy, round leaves (4 1/2" wide), inflated leaf stems, and very showy lavender flowers; can grow to 16" tall. **Importance:** Forms a carpeted layer from shore to shore of slow moving or still waters, preventing native plants from germinating and growing, reducing habitats for most native fish and aquatic animals.

Watercress *(Nasturtium officinale, N. microphyllum)*: Perennial. **Native to:** Europe and central Asia. **Distribution:** Gently flowing water in or near lakes, streams, rivers. **ID Keys:** Floating, leafy plants with hollow stems; 4 to 18" tall. Leaves are pinnately compound. Produces small white and green flowers in clusters. **Importance:** Becomes dense and can impede water flow, prevent native vegetation from growing, and reduce habitat.

Brazilian Elodea *(Egeria densa)*: Perennial. **Native to:** South America (Brazil, Argentina, and Uruguay). **Distribution:** Fresh water lakes & ponds and slow moving streams. **ID Keys:** Leaves (3 to 8) whorled, range in size from 1/2 to 1 1/2" long and 1/8 to 1/5" wide, often curved downward. Plants have lots of adventitious roots and heavily laterally branched. **Importance:** Dense mats restrict water flow, trap sediment, and impede recreational use of waterways; also will reduce light and out-compete native plants.

Flowering rush *(Butomus umbellatus)*: Perennial. **Native to:** Europe. **Distribution:** Emergent plant along shorelines or submersed plant in lakes and rivers. **ID Keys:** Green triangular stems up to 3' tall (similar to bulrush). Leaves are limp under water; above the surface they are spirally twisted. Umbrella shaped cluster of flowers that are whitish pink (only flowers in shallow water or dry sites). **Importance:** Crowds out native plants, forms dense stands which interfere with recreational lake use and reduces habitat.

Reed Canarygrass *(Phalaris arundinacea)*: Perennial. **Native to:** Eurasia. **Distribution:** Wetlands including marshes, wet prairies, wet meadows, fens, stream banks, and swales. Quite common in the northern part of the state where it frequently occurs in wet meadows and marshes. **ID Keys:** Grass that grows 2 to 6' tall. Erect hairless stems with leaf blades are 1/4 to 1/3" wide, gradually tapering, up to 10" long. Distinct transparent ligule (a membrane where blade and sheath meet). Densely clustered green to purple changing to beige flowers from May to mid-June. **Importance:** It has been planted widely for forage and for erosion control. Out competes native species by forming dense stands. Invasion associated with disturbance.

Purple Loosetrife (*Lythrum salicaria* L.): Perennial. **Native to:** Eurasia. **Distribution:** Found in wetlands, pond edges, streambanks, canals, and ditches. **ID Keys:** Herbaceous plant that grows up to 6' tall. Leaves are lanceolate 2 to 5" long and may have some small hairs. They are opposite or whorled around branching stems. Pinkish purple to red flower spikes. **Importance:** Commonly planted as ornamental; displaces natural vegetation and wildlife.

Invasive plants have the ability to thrive and spread aggresively outside of their natural range. While some invasive plants tend to be more aggressive than others, it remains equally important to be able to correctly identify and manage the invasive plant before it begins to cause damage to the ecosystem, humans, or animals.

What can you do? Inspect and clean boats and equipment before leaving the water area. Use native plant species around home and in aquatic areas. Be aware of plants rapidly spreading or increasing in number and identify them if unknown. If they are invasive, seek advice on determining the best strategy for removal. Not all plants can be removed the same way, so be sure to ask questions on how to specifically remove the invasive plant you have.

Please visit our website at www.inhs.uiuc.edu/research/CAPS/ or email invasives@inhs.uiuc.edu for more information on invasives.