4. Lift the LCD display and detach the display connector from the circuit board.

   The circuit board layout may vary for each terminal model. The location of the connector varies by model.

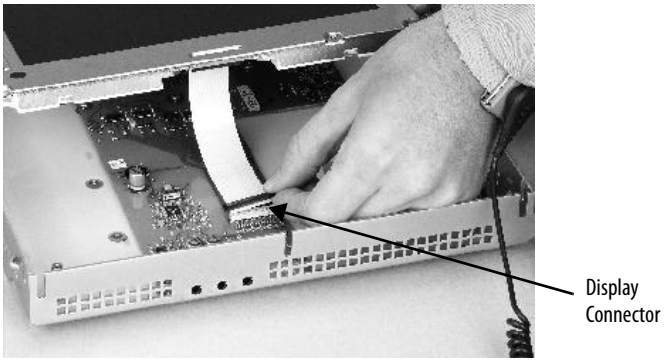

5. Detach the backlight connectors from the circuit board.
   - The 1250 has one or two backlight connectors depending on the series of the display.
   - The 1500 has four backlight connectors.

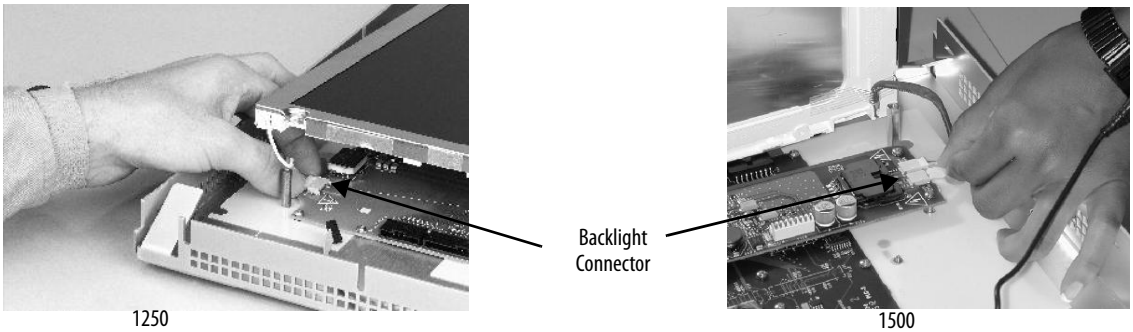

1250 1500

6. Follow these steps for the 700 and 1000 displays.
   a. Press the retaining tab that secures the backlight, then pull out the backlight.

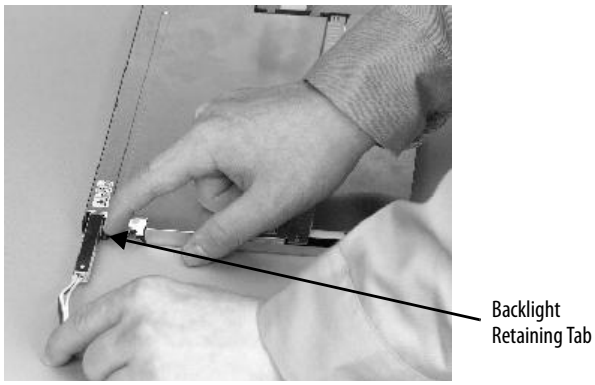

b. Insert the new backlight.

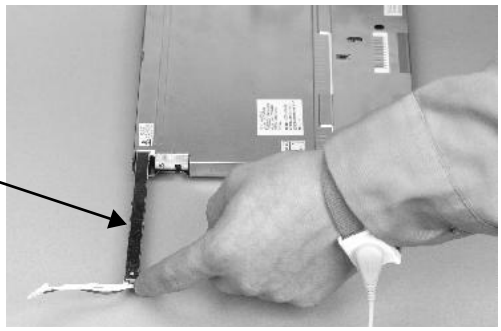

7. Follow these steps for the 1250 and 1500 displays.

   a. Remove the screws that secure the backlights and remove the backlights.

      For the 1250 series A and B displays, the two backlights are each secured with two screws. The single backlight for the 1250 series C displays is secured with one screw.

      For the 1500 series B displays, remove the tape, then remove the backlights.

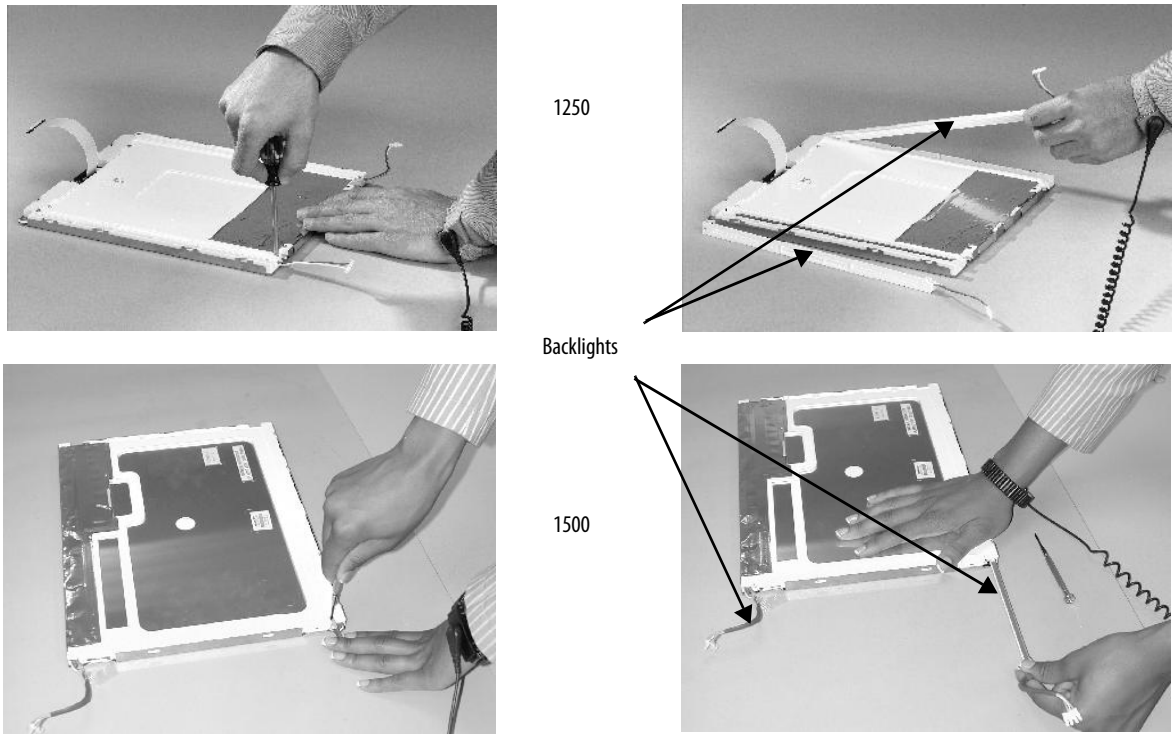

   b. Insert the new backlights then secure each with the same screws from the previous step, and torque to 0.117 N•m (1.04 lb•in).

8. Attach the LCD display connector to the circuit board.

   Refer to step 4.

9. Attach the backlight connector to the circuit board.

   Refer to step 5.

10. Secure the LCD display.
    a. Attach the display bracket then secure the display in the bracket for the 700 series C display.
    b. Attach the four screws for all other displays.

    Tighten the screws and torque to 0.58 N•m (5...7 lb•in).

11. Replace the display module bezel.

Remove the Product ID Label

You can remove the label on your terminal and attach your own label.

1. Remove the Allen-Bradley label using your fingers or a tweezers.

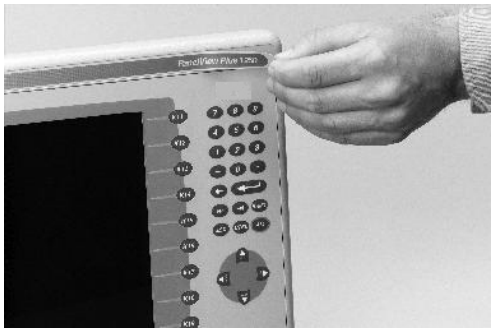

2. Clean area with damp cloth and isopropyl alcohol.
3. Remove adhesive backing of OEM label and affix over area where label was located.

Replace the Keypad Legend Inserts

Legend strips are available as separate catalog numbers for keypad terminals. One side of the legend strips have default key legends; the other side is blank for creating custom legends.

The F1-F*xx* and K1-K*xx* legend inserts are accessible when the display module bezel is removed.

Follow these steps to replace the key legend inserts.

1. Remove power from the terminal.
2. Remove the display module bezel.

3. Pull the legend inserts out from the slots on the bezel.

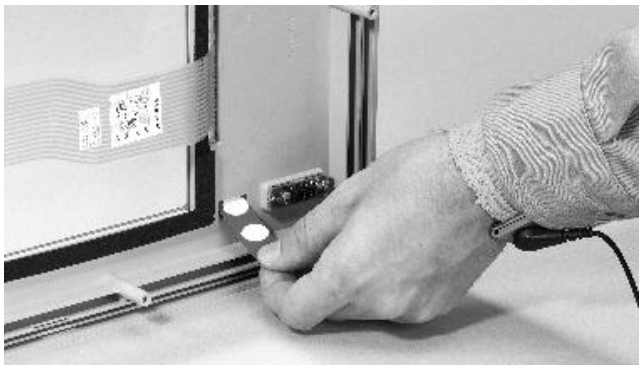

4. Slide the new legend strips into the same slots until only the end tab is visible.
5. Replace the display module bezel.

Load an SD Card or USB Flash Drive

All logic modules have an SD (secure digital) card slot and two USB host ports for external storage:

- The SD card slot supports catalog number 1784-SD*x* cards.
- The USB host ports support USB flash drives.

Both the SD card and USB flash drives are hot-swappable; they can be loaded and unloaded while the terminal is powered on and running.

TIP
- SD card volumes are named Storage Card2, Storage Card3, ...
- USB flash drive volumes are named USB Storage, USB Storage2, ...

SD card and USB flash drive partitions are managed by the Storage Manager in the control panel. Alternatively, they can be partitioned on a personal computer running a Windows operating system.

TIP SD card volume names and physical characteristics are consistent with the CompactFlash card used by other PanelView Plus products. Applications on these CompactFlash cards will easily migrate to the SD card used by the PanelView Plus 6 terminals.

To load an SD card or USB flash drive, insert the media in the appropriate slot on the logic module until firmly seated.

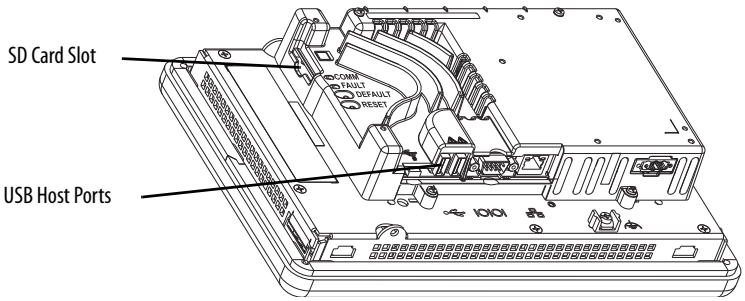

To remove the SD card, press on the card to release it, then pull it out. To remove a USB flash drive, gently pull it from the port.

Clean the Display

Use a protection antiglare overlay for easier cleaning of the display screen.

ATTENTION: Use of abrasive cleaners or solvents may damage the display. Do not scrub or use brushes.

Follow these steps to clean the display screen.

1. Disconnect power from the terminal.
2. Use a clean sponge or soft cloth with mild soap or detergent to clean the display.
3. Dry the display with a chamois or moist cellulose sponge to avoid water spots.

Remove fresh paint splashes and grease before drying by rubbing lightly with isopropyl alcohol (70% concentration). Then wash the display using mild soap or detergent. Rinse with clean water.

Terminal Connections

Topic	Page
Connections to Controllers	136
Communication Port Isolation	137
USB Ports	138
Serial Connections	139
Ethernet Connections	142
DH-485/DH+ Communication Module	144
ControlNet Module	147

ATTENTION: Wiring and Safety Guidelines

Use publication NFPA 70E, Electrical Safety Requirements for Employee Workplaces, IEC 60364 Electrical Installations in Buildings, or other applicable wiring safety requirements for the country of installation when wiring the devices. In addition to the NFPA guidelines, here are some other guidelines to follow:

- Route communication cables to terminal by a separate path from incoming power. Do not run signal wiring and power wiring in the same conduit.
- Cross power and communication lines at right angles if they must cross.
- Communication lines can be installed in the same conduit as low-level DC I/O lines (less than 10V).
- Shield and ground cables appropriately to avoid electromagnetic interference (EMI). Grounding minimizes noise from EMI and is a safety measure in electrical installations.

For more information on grounding recommendations, refer to the National Electrical Code published by the National Fire Protection Association.

Connections to Controllers

The tables provide a summary of PanelView Plus 6 connections to controllers and interface modules for runtime communication.

Table 47 - Runtime Communication Cables: PanelView Plus 6 Terminals to SLC Controllers

Protocol	PanelView Plus 6 Comm Port	SLC 500, 5/01, 5/02 CH1 RJ45 (DH-485)	SLC 5/03, 5/04, 5/05 CH0 (9-pin RS-232) (DF1 or DH-485)	SLC 5/03 CH1 (RJ45) (DH-485)	SLC 5/04 CH1 (DH+)	SLC 5/05 CH1 (ENET)
DF1	RS-232 (DF1) port (9-pin)	—	2711-NC13 (5 m/16 ft) 2711-NC14 (10 m/32 ft)	—	—	—
DH-485	RS-232 (DH-485) port (9-pin)	Use AIC+ module (1761-NET-AIC) to connect to port 1 or 2	2711-NC13 (5 m/16 ft) 2711-NC14 (10 m/32 ft)	Use AIC+ module (1761-NET-AIC) to connect to port 1 or 2	—	—
	DH-485 port Requires 2711P-RN6, 2711P-RN6K	1761-CBL-AS03 (3 m/10 ft) 1761-CBL-AS09 (9 m/30 ft)	Use AIC+ module (1761-NET-AIC) to connect to port 3	1761-CBL-AS03 (3 m/10 ft) 1761-CBL-AS09 (9 m/30 ft)	—	—
ControlNet	ControlNet port Requires 2711P-RN15S, 2711P-RN15SK	—	—	—	—	—
EtherNet/IP	EtherNet/IP port	—	Use 1761-NET-ENI module with Ethernet cable	—	—	1585J-M type cable or 2711P-CBL-EX04 (4 m/14 ft) (1)
DH+	DH+ port Requires 2711P-RN6, 2711P-RN6K	—	—	—	Shielded twinaxial cable (1770-CD)	—

(1) EtherNet/IP direct connection from the terminal to an SLC 5/05 controller requires an Ethernet switch or the 2711P-CBL-EX04 crossover cable.

Table 48 - Runtime Communication Cables: PanelView Plus 6 Terminals to PLC-5 and MicroLogix Controllers

Protocol	PanelView Plus 6 Comm Port	PLC-5, PLC-5C, PLC-5E CH0 (25-pin RS-232) (DF1)	MicroLogix 1400, 1500LRP CH1/CH2 (9-pin RS-232) (DF1 or DH-485)	MicroLogix 1000, 1100, 1200, 1400, 1500LSP CH0 (8-pin Mini DIN) (DF1 or DH-485)	MicroLogix 1100, 1400 Ethernet
DF1	RS-232 (DF1) port (9-pin)	2711-NC13 (5 m/16 ft) 2711-NC14 (10 m/32 ft) (9-to-25 pin adapter required)	2711-NC13 (5 m/16 ft) 2711-NC14 (10 m/32 ft)	2711-NC21 (5 m/16 ft) 2711-NC22 (15 m/49 ft) (2)	—
DH-485	RS-232 (DH-485) port (9-pin)	—	2711-NC13 (5 m/16 ft) 2711-NC14 (10 m/32 ft)	2711-NC21 (5 m/16 ft) 2711-NC22 (15 m/49 ft)	—
	DH-485 port Requires 2711P-RN6, 2711P-RN6K	—	—	Use AIC+ module (1761-NET-AIC) to connect to port 3	—
ControlNet	ControlNet port Requires 2711P-RN15S, 2711P-RN15SK	To PLC-5C with ControlNet cable	—	—	—
EtherNet/IP	EtherNet/IP port	To PLC-5E with 1585J-M type cable or 2711P- CBL-EX04 (4 m/14 ft) (1)	Use 1761-NET-ENI module with Ethernet cable		1585J-M type cable or 2711P- CBL-EX04 (4 m/14 ft) (2)
DH+	DH+ port Requires 2711P-RN6, 2711P-RN6K	Shielded twinaxial cable (1770-CD)	—	—	—

(1) For a direct connection between the terminal and the controller use the 2711P-CBL-EX04 crossover cable.
(2) The AIC+ module is recommended for isolation purposes when the terminal and controller are not on same power supply.

Table 49 - Runtime Communication Cables: PanelView Plus 6 Terminals to Logix Controllers

Protocol	PanelView Plus 6 Comm Port	ControlLogix CH0 (9-pin RS-232) (DF1)	CompactLogix™ CH0 (9-pin RS-232) (DF1 or DH-485)
DF1	RS-232 (DF1) port (9-pin)	2711-NC13 (5 m/16 ft) 2711-NC14 (10 m/32 ft) 2706-NC13 (3 m/10 ft)	2711-NC13 (5 m/16 ft) 2711-NC14 (10 m/32 ft) 2706-NC13 (3 m/10 ft)
DH-485	RS-232 (DH-485) port (9-pin)	—	2711-NC13 (5 m/16 ft) 2711-NC14 (10 m/32 ft) 2706-NC13 (3 m/10 ft)
	DH-485 port Requires 2711P-RN6, 2711P-RN6K	—	Use AIC+ module (1761-NET-AIC) Connect to Port 3
ControlNet	ControlNet port Requires 2711P-RN15S, 2711P-RN15SK	Use 1756-CNB module with ControlNet cable	1769-L35CR, 1769-L32C, 1768-CNB, or 1768-CNBR with ControlNet cable
EtherNet/IP	EtherNet/IP port	Use 1756-EN2T or 1756-ENBT module with 1585J-M type cable or 2711P- CBL-EX04 (4 m/14 ft)(1)	To 1769-L35E, 1769-L23E, 1769-L32E, or 1768-ENBT module with 1585J-M type cable or 2711P- CBL-EX04 (4 m/14 ft) (1)
DH+	DH+ port Requires 2711P-RN6, 2711P-RN6K	Use 1756-DHRIO module with shielded twinaxial cable (1770-CD)	—

(1) For a direct connection between the terminal and controller, use the 2711P-CBL-EX04 crossover cable.

Table 50 - Runtime Communication Cables: PanelView Plus 6 Terminals to Interface Modules

Protocol	PanelView Plus 6 Comm Port	1747-AIC	1761-NET-AIC			1771-NET-ENI
			Port 1 (9-pin)	Port 2 (8-pin Mini DIN)	Port 3 (DH-485)	Port 2 (8-pin Mini DIN)
DF1	RS-232 port (9-pin)	—	2711-NC13 (5 m/16 ft) 2711-NC14 (10 m/32 ft)	2711-NC21 (5 m/16 ft) 2711-NC22 (15 m/49 ft) Null modem required	—	1761-CBL-AP00 (5 m) 1761-CBL-PM02 (2 m) 2711-CBL-PM05 (5 m) 2711-CBL-PM10 (10 m)
DH-485	RS-232 port (9-pin)	—	2711-NC13 (5 m/16 ft) 2711-NC14 (10 m/32 ft)	2711-NC21 (5 m/16 ft) 2711-NC22 (15 m/49 ft) Null modem required	—	
	DH-485 port Requires 2711P-RN6, 2711P-RN6K	Direct connection to single AIC with Belden 9842 cable(1)	—	—	Direct connection to single AIC+ with Belden 9842 cable (1)	—

(1) Use serial port on the PanelView Plus 6 terminal with an AIC+ module for a DH-485 network solution.

Communication Port Isolation

The PanelView Plus 6 terminals contain integral and modular (externally attached) communication ports. Most of these ports contain electrical isolation.

Table 51 - Communication Port Isolation

Integral Communication Port	Isolation	External Communication Module Port	Isolation
RS-232	Isolated	DH-485, Cat. no. 2711P-RN6	Isolated
USB	Nonisolated	DH+, Cat. no. 2711P-RN6	Isolated
Ethernet	Isolated	ControlNet, Cat. no. 2711P-RN15S, 2711P-RN15SK	Isolated

USB Ports

The terminals have two USB 2.0 host ports and one mini USB 2.0 device port.

Figure 10 - USB Ports

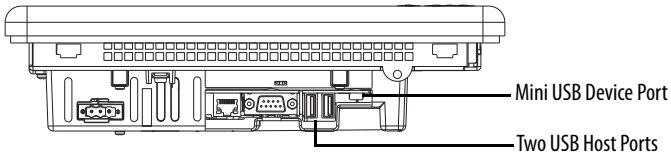

The mini USB (type B) device port supports a connection to a host computer using TCP/IP communication and the USB function RNDIS client driver.

The two USB (type A) host ports support connections to:

- USB keyboard and mouse devices, HID devices, with native device drivers
- Removable, hot-swappable, USB flash drives for external storage
- USB supported printers
- Other USB devices such as modems, cameras, and bar code readers

A vendor specific Windows CE driver is required for all other USB devices. For a list of compatible USB devices, go to the knowledgebase at the Rockwell Automation technical support site and search for ID 115072.
http://www.rockwellautomation.com/support

Plug a USB device into either one of the two USB host ports on the logic module.

Table 52 - USB Connector Pinout

	Pin	Signal
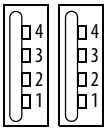	1	USBVCC
	2	USBD-
	3	USBD+
	4	USB-GND

IMPORTANT The USB host and device ports are not to be used for runtime operations.

WARNING: Do not connect or disconnect the communication cable with power applied to the terminal, or the serial device on the other end of the cable. An electrical arc could cause an explosion in hazardous location installations. Be sure that power is removed or the area is nonhazardous before proceeding.

WARNING: USB devices not powered by the USB port must be within the same enclosure and connected to a ground system common with the terminal, or the USB devices must be used with a USB hub that provides galvanic isolation.

If a USB hub is connected to the terminal, an externally powered USB hub is recommended. Before attaching devices to a USB hub, check that the power adapter is connected and powered on.

Serial Connections

The logic module of the terminals has a serial RS-232 port that supports these connections:

- DH-485 communication through a serial connection
- DF1 full-duplex communication with controllers using direct connections or modem connections
- Third-party point-to-point communication
- Application uploads and downloads

The serial port is a 9-pin, male, RS-232 connector. Table 53 shows the pinout descriptions for this port and how these pins map to the serial ports on the controllers.

The maximum cable length for serial communication is 15.24 m (50 ft).

Figure 11 - RS-232 Serial Port

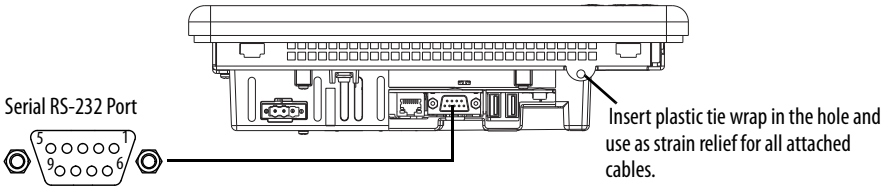

Table 53 - RS-232 Serial Port Connector Pinout

PanelView Plus RS-232 Port 9-pin DCE		SLC or Logix 9-pin	PLC 25-pin	MicroLogix/ ENI 8-pin DIN
1				
2	RXD →	2	3	4
3	← TXD	3	2	7
4	← DTR	4	20	
5	↔ COM	5	7	2
6	DSR →	6	6	
7	← RTS	7	4	
8	CTS →	8	5	
9				
Connector Shell	Chassis Gnd			

WARNING: Do not connect or disconnect the communication cable with power applied to the terminal, or the serial device on the other end of the cable. An electrical arc could cause an explosion in hazardous location installations. Be sure that power is removed or the area is nonhazardous before proceeding.

Modem Connection

Wire or radio modem communication is possible between the terminal and controller. Each modem must support full duplex communication. Refer to your modem user manual for details on settings and configuration.

Figure 12 - Modem Connection

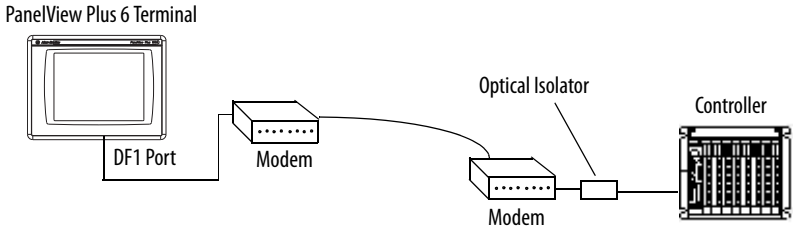

Construct a Null Modem Cable

To construct a null modem cable, refer to this pinout.

Table 54 - Null Modem Pinout

Pin Description	PanelView Plus 9-pin	9-pin Modem	PanelView Plus 9-pin	25-pin Modem	Pin Symbol
FG (Frame Ground)	-	-	-	1	FG
TD (Transmit Data)	3	2	3	3	RD
RD (Receive Data)	2	3	2	2	TD
RTS (Request to Send)	7	8	7	5	CTS
CTS (Clear to Send)	8	7	8	4	RTS
SG (Signal Ground)	5	5	5	7	SG
DSR (Data Set Ready)	6	4	6	20	DTR
DTR (Data Terminal Ready)	4	6	4	6	DSR

Computer Connections

The RS-232 serial port of the logic module supports application uploads and downloads between the terminal and a computer using a direct connection.

Figure 13 - Serial Port Connection to Computer

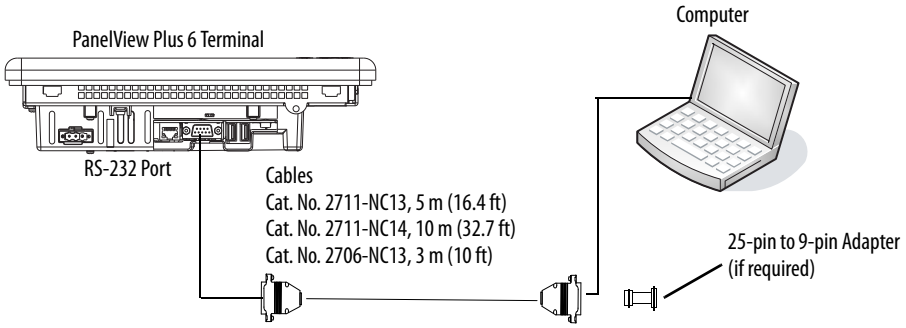

Table 55 - Upload/Download Cable with Handshaking

PanelView Plus Port (DCE)		Computer Port (DTE) with Handshaking	
9-pin male		**9-pin male**	
1 NC		1	DCD
2	RXD →	2	RXD (Data Receive)
3	← TXD	3	TXD (Data Transmit)
4 NC		4	
5	↔ COM	5	COM
6 (pulled high to +12V)	DSR →	6	DSR
7	← RTS	7	RTS
8	CTS →	8	CTS
9 NC		9	NC

Table 56 - Upload/Download Cable without Hardware Handshaking

PanelView Plus Port (DCE)		Computer Port (DTE)	
9-pin male		**9-pin**	**25-pin**
2	RXD →	2	3
3	← TXD	3	2
5	↔ COM	5	7

Ethernet Connections

The Ethernet port on the logic module that supports these connections:

- EtherNet/IP communication
- Third-party Ethernet communication
- Auto MDI/MDIX connections
- Network connections
- Application uploads/downloads
- Printing

Ethernet Connector

The base-configured unit of the terminals has an RJ45, 10/100 Base-T connector for EtherNet/IP or Ethernet TCP/IP network communication.

Figure 14 - Ethernet Connector

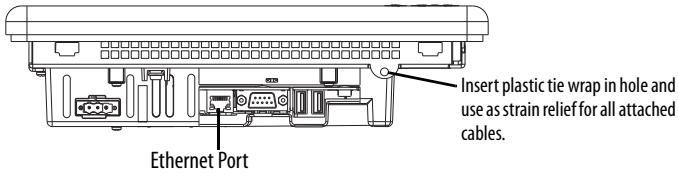

Table 57 - Ethernet Connector Pinout

Connector	Pin	Pin Name
Looking into RJ45 Connector 1 8 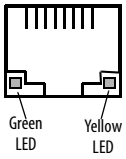 Green LED Yellow LED	1	TD+
	2	TD-
	3	RD+
	4	NC
	5	NC
	6	RD-
	7	NC
	8	NC
	Shield Connection	No direct connection (AC coupled to chassis GND)

The Ethernet connector has two indicators that provide the status of activity.

Table 58 - Ethernet Status Indicators

Indicator	LED Color	Description
Link Integrity	Yellow	Asserted when a link is present.
Activity LED	Green	Pulsed active when receive or transmit activity is present.

Ethernet Cable

Use Belden 7921A shielded CAT5E cable according to TIA 568-B.1 and RJ45 connector according to IEC 60603-7 for compliance with Marine emission limits and the European Union 89/336/EEC EMC Directive.

The maximum length of the Ethernet cable between the logic module's Ethernet port and a 10/100 Base-T port on an Ethernet hub (without repeaters or fiber) is 100 m (328 ft).

WARNING: Do not connect or disconnect any communication cable with power applied to this device or any device on the network. An electrical arc could cause an explosion in hazardous location installations. Be sure that power is removed or the area is nonhazardous before proceeding.

Security Considerations

IGMP (Internet Group Management Protocol) is used for IPv4 multicast. A multicast is communication between a single sender and multiple receivers on a network. IGMP is used to exchange membership status data between IPv4 routers that support multicasting and members of multicast groups. A router is an intermediary device on a communication network that expedites message delivery by finding the most efficient route for a message packet within a network, or by routing packets from one subnetwork to another. A sub-network is a separate part of an organization's network identified through IP addressing.

PanelView Plus terminals provide level 2 (full) support for IPv4 multicasting (IGMP version 2) as described in RFC 1112 and RFC 2236.

SNMP (Simple Network Management Protocol) is used for internal network management and is not supported.

Ports 137 and 138 are normally open to support the NetBIOS protocol used by Windows CE.NET similar to other Microsoft and IBM network operating systems.

DH-485/DH+ Communication Module

Terminals with a catalog number 2711P-RN6 or 2711P-RN6K communication module support communication with these networks:

- DH+ networks
- DH-485 networks

The communication module has a separate port for each communication protocol. You can communicate with only one network at one time.

Figure 15 - DH-485/DH+ Communication Module Connectors

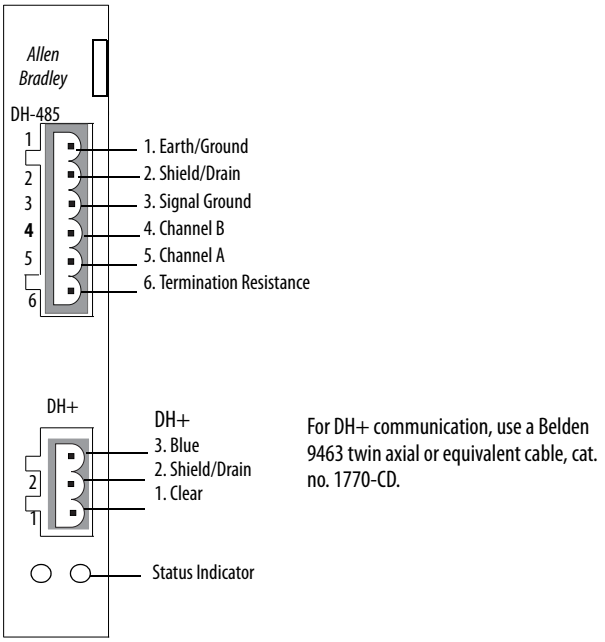

IMPORTANT See your controller documentation for appropriate controller connections.

Status Indicators

The module has indicators that show the status of the DH-485 or DH+ network connection.

Table 59 - DH-485 and DH+ Status Indicators

Indicator State	Description
Off	Channel is not online.
Blinking green	Device is only node on the network.
Solid green	Device is online and receiving token.
Blinking red	DH-485: Duplicate node. DH+: Parity error.
Solid red	Failed selftest.

DH-485 Network Port Wiring

Refer to the figures to attach the RS-485 connector to a Belden 3106A or 9842 cable. Refer to Connections to Controllers on page 136 if you are using standard Allen-Bradley cables.

IMPORTANT A daisy-chained network is recommended. We do not recommend a hybrid star/daisy chain networks as shown.

Figure 16 - Daisy-chain Connection

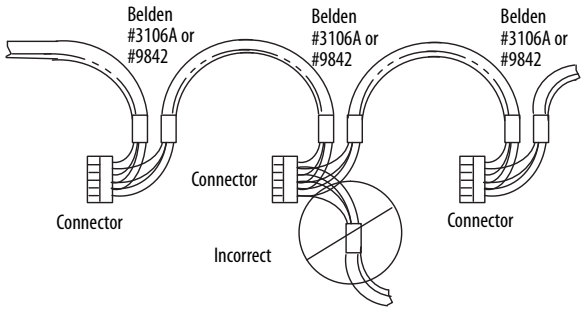

Attach the connector to a Belden 3106A or 9842 cable as shown Figure 17 or Figure 18.

Figure 17 - Single Cable Connection

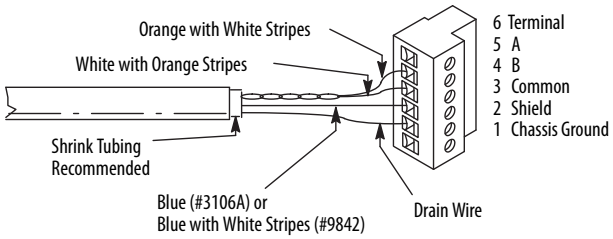

Figure 18 - Multiple Cable Connection

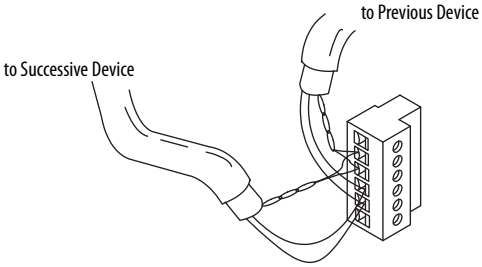

Table 60 - Belden 3106A Wire Connections

For this Wire/Pair	Connect this Wire	To this Terminal
Shield/Drain	Non-jacketed	Terminal 2 - Shield
Blue	Blue	Terminal 3 - (Common)
White/Orange	White with Orange Stripe	Terminal 4 - (Data B)
	Orange with White Stripe	Terminal 5 - (Data A)

DH+ Network Connections

Use a Belden 9463 twin-axial or equivalent cable, catalog number 1770-CD, to connect a terminal to a DH+ link.

You can connect a DH+ link in two ways:

- **Trunk line/drop line** - from the drop line to the connector screw terminals on the DH+ connectors of the processor.
- **Daisy chain** - to the connector screw terminals on the DH+ connectors on the processor.

Follow these guidelines when installing DH+ communication links:

- Do not exceed these cable lengths:
  - Trunk line-cable length: 3,048 m (10,000 ft)
  - Drop-cable length: 30.4 m (100 ft)

  The maximum cable length is determined by the baud rate.
- Do not connect more than 64 stations on a single DH+ link.

Figure 19 - Terminal Connection to DH+ Link

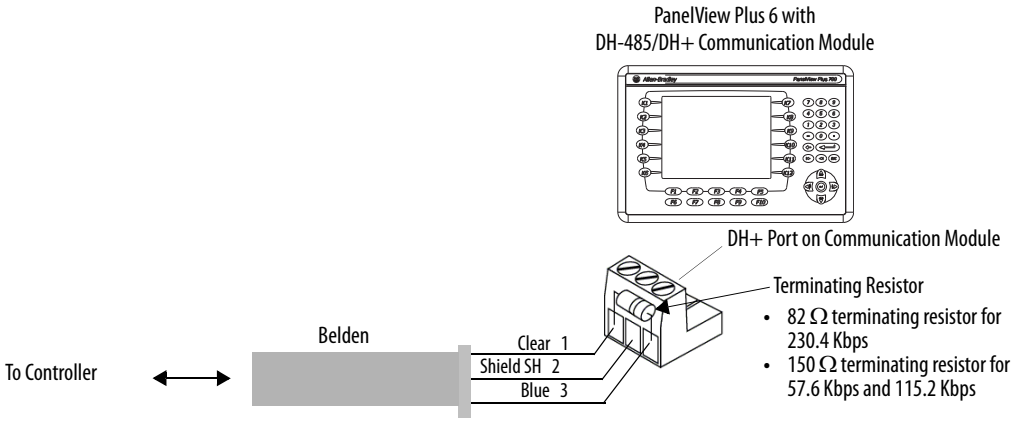

ControlNet Module

Terminals with a catalog number 2711P-RN15S or 2711P-RN15SK communication module support ControlNet communication and the transfer of applications between devices on a ControlNet network.

Additional Resources

For more information on ControlNet products, refer to these publications:

- NetLinx Selection Guide, publication NETS-SG001
- ControlNet Coax Media Planning and Installation Guide, publication CNET-IN002

The Rockwell Automation website http://www.rockwellautomation.com provides information and product descriptions of ControlNet products.

ControlNet Protocol

The terminals support Unscheduled and Scheduled messaging, Scheduled I/O, and redundant cabling with PLC-5C and ControlLogix controllers.

The ControlNet architecture supports multiple processors and up to 99 nodes (via taps) anywhere along the trunk cable of the network. There is no minimum tap separation and you can access the ControlNet network from every node (including adapters).

Compatible ControlNet Controllers

A PanelView Plus 6 terminal with a ControlNet module communicates with a PLC-5C or ControlLogix controller using Unscheduled messaging:

- PLC-5C (PCCC commands)
- ControlLogix processor (CIP protocol)

These controllers are supported:

- ControlLogix with a 1756-CNB ControlNet module
- PLC-5/20C, PLC-5/40C, PLC-5/60C, PLC-5/80C

Software and Firmware Requirements

The software and firmware must be installed on the development computer and the PanelView Plus 6 terminal to configure and communicate with an Allen-Bradley controller on a ControlNet network.

Table 61 - ControlNet Unscheduled Communication

Software/Firmware	Version/Revision Requirements
FactoryTalk View Studio	Version 6.0 or later
FactoryTalk View Machine Edition Runtime	Version 6.0 or later
ControlNet module firmware	2711P-RN15S, Series A, Rev A (firmware revision 2.07 or later) (1)

(1) This applies to terminals that are ordered as pre-configured units with the ControlNet module.

Table 62 - ControlNet Scheduled Communication

Requirements	Version Requirements
FactoryTalk View Studio	Version 6.0 or later
FactoryTalk View Machine Edition Runtime	Version 6.0 or later
RSNetWorx™ for ControlNet	Version 5.11 or later
RSLogix™ 5000	Version 18.0 or later
ControlNet module firmware	2711P-RN15S, Series A, Rev C (firmware revision 3.08 or later) (1)

(1) This applies to terminals that are ordered as preconfigured units with the ControlNet module.

WARNING: The ControlNet communication module, cat. no. 2711P-RN15S or 2711P-RN15SK, will not run with FactoryTalk View ME firmware revision 3.20.04 or earlier. All ControlNet modules with revision 3.07 firmware must be upgraded to revision 3.08 or later; otherwise, outputs may turn on an indeterminate state.

ControlNet Module Connectors

Figure 20 - Cat. No. 2711P-RN15S or 2711P-RN15SK Communication Module

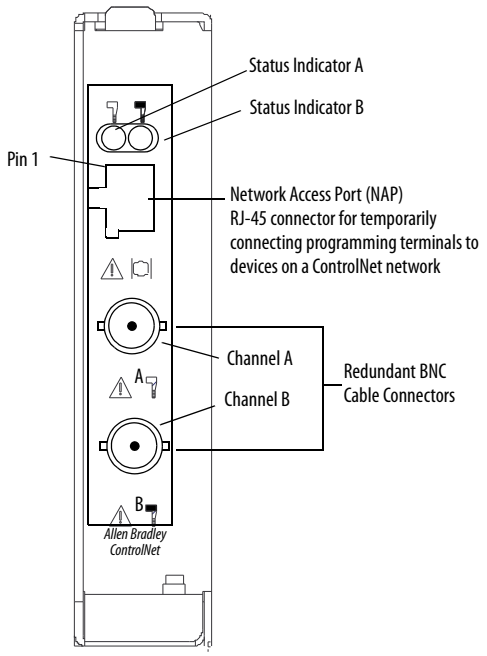

Pin	NAP Signal
1	Signal Common
2	No Connection
3	TX_H
4	TX_L
5	RX_L
6	RX_H
7	No Connection
8	Signal Common
Shell	Earth/Ground

ATTENTION: Do not connect more than one ControlNet network to the communication module. If you attempt to connect a second network to the module, your communication system will operate erratically.

NAP and Redundant Cables

Refer to the ControlNet Coax Media Planning and Installation Guide, publication CNET-IN002, for descriptions of ControlNet components.

Table 63 - ControlNet NAP and Redundant Cables

Item	Cat. No.
RG-6 quad-shield	1786-RG6
Coax repeater	1786-RPT, 1786-RPTD
Coax taps	1786-TPR, 1786-TPS, 1786-TPYR, 1786-TPYS
Network access cable	1786-CP
Coax tool kit	1786-CTK
Segment terminators	1786-XT
BNC connectors	1786-BNC, 1786-BNCJ, 1786-BNCP, 1786-BNCJ1

IMPORTANT Do not connect to a network using both the redundant cable BNC connector and the Network Access Port (NAP).

Module Connection to ControlNet Network

You can make these connections with the ControlNet communication module:

- Connect directly to a ControlNet network, which requires a tap.
- Connect to a device already connected to the ControlNet network.

WARNING: When used in a Class I, Division 2, hazardous location, this equipment must be mounted in a suitable enclosure with proper wiring that complies with the governing electrical codes.

WARNING: Do not connect or disconnect any communication cable with power applied to this device or any device on the network. An electrical arc could cause an explosion in hazardous location installations. Be sure that power is removed or the area is nonhazardous before proceeding.

Firmware Upgrades

Topic	Page
Terminal Firmware	151
Download Firmware Files	152
Firmware Upgrade Wizard	152
Upgrading Terminal Firmware from a Storage Device	153
Upgrade Terminal Firmware over the Network	156

Terminal Firmware

Firmware components are packaged as execute-in-place (XIP) regions in a single System Code (SC) .img file. When the SC .img file is copied to the Virtual File System (VFS) on the terminal, the terminal's XIP regions are updated and the terminal restarts automatically. These firmware components are affected during an upgrade:

- FactoryTalk View Machine Edition Station
- Communication protocols and drivers including Kepware drivers
- Windows fonts
- Windows CE Pro components
- FactoryTalk components
- User extensions

A firmware upgrade does not affect these terminal components or settings:

- Windows registry
- File system including the FactoryTalk View Machine Edition application loaded in the terminal
- Network parameters including the network device name, DHCP-enabled and static IP addressing, speed, and duplex setting
- Display settings
- Screen saver configuration
- Touch-screen calibration

Download Firmware Files

Before upgrading your terminal firmware, you need to download the appropriate firmware installation package from the Rockwell Automation website. The package is named PVP700-1500_6.0-yyyymmdd.exe, where 6.0 is the ME version contained in the package and yyyymmdd is the date the package was created. This installation package contains:

- Firmware Upgrade Package (FUP) contains an autorun executable and the new firmware files.
- Firmware Upgrade Wizard (FUW), version 6.0 , is used to upgrade the terminal firmware using the contents of the FUP.

Both the FUP and FUW are copied to a specified location on your computer during the download.

Follow these steps to download firmware installation files to your computer.

1. Go to http://www.rockwellautomation.com/support and select Firmware Updates under Downloads.
2. Select the 'PanelView Plus' link.
3. Locate the new FUP.

   TIP The FUP name is ME_PVP6xX_6.0-yymmdd.fup:
   - yyyymmdd is the date the firmware package was created
   - 6.0 is the version of ME contained in this package
4. Download the upgrade file (.exe) to a temporary folder on the same drive as the FactoryTalk View Machine Edition (ME).
5. Run the upgrade file (.exe) installation procedure.
   - The FUW is installed in the FactoryTalk View ME folder.
   - The firmware upgrade package (.fup) file is installed into the folder specified during the installation procedure.

You are now ready to run the FUW to upgrade terminal firmware from a USB flash drive or SD card or by using a network connection.

Firmware Upgrade Wizard

The Firmware Upgrade Wizard (FUW) is used to upgrade the terminal firmware. Two methods are provided for upgrading the firmware:

- Create a firmware upgrade card with the contents of the FUP file that you can then load in the terminal to upgrade the firmware.

  The firmware upgrade card can be a USB flash drive or an SD card, catalog number 1784-SD*x*.
- Upgrade firmware in a terminal connected to a computer over a direct network connection. The network connection requires a computer running RSLinx Enterprise software, version 5.0 or later. In the RSLinx Enterprise software, you select the terminal you want to upgrade.

You can run the FUW from within FactoryTalk View Studio software or from the Programs menu on your computer:

- Choose Tools>Firmware Upgrade Wizard in FactoryTalk View Studio.
- Choose Start>Programs>Rockwell Software>FactoryTalk View>Tools>ME Firmware Upgrade Wizard.

Upgrading Terminal Firmware from a Storage Device

Upgrading firmware from a storage device is a two-step process. First, you create a firmware upgrade card with the required firmware files. Secondly, you load the card in the target terminal to upgrade the firmware.

The firmware upgrade card can be a USB flash drive or an SD card.

Create a Firmware Upgrade Card

Follow these steps to copy firmware files to a USB flash drive or SD card.

1. Insert either a USB flash drive or an SD card into the appropriate slot on your computer.
2. Run the Firmware Upgrade Wizard.
   - Choose Tools>Firmware Upgrade Wizard in FactoryTalk View Studio.
   - Choose Start>Programs>Rockwell Software>FactoryTalk View>Tools>ME Firmware Upgrade Wizard.
3. Follow these steps from the initial Firmware Upgrade Wizard dialog box.
   a. Select Create firmware upgrade card.
   b. Select the location of the firmware card by browsing to the root directory of the storage card loaded in your computer for example E:\.

      The firmware files will be copied to this location. You can also specify a folder on the hard drive.
   c. From the Existing terminal type pull-down list, choose a version 6.0, PanelView Plus terminal.
   d. Click Next.

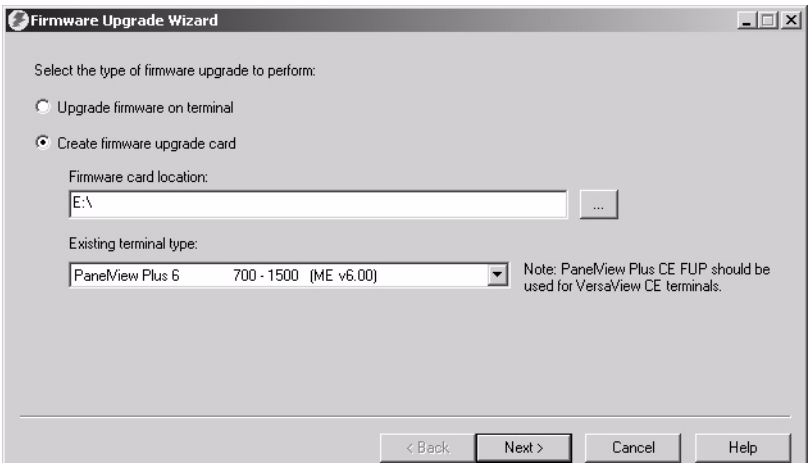

4. Follow these steps from this dialog box.
   a. Browse to the location of the firmware source files on your computer, where the FUP was installed.
   b. Choose the firmware revision for the upgrade.
   c. Click Next.

      It may take several seconds for the next dialog to appear while the FUP is being retrieved.

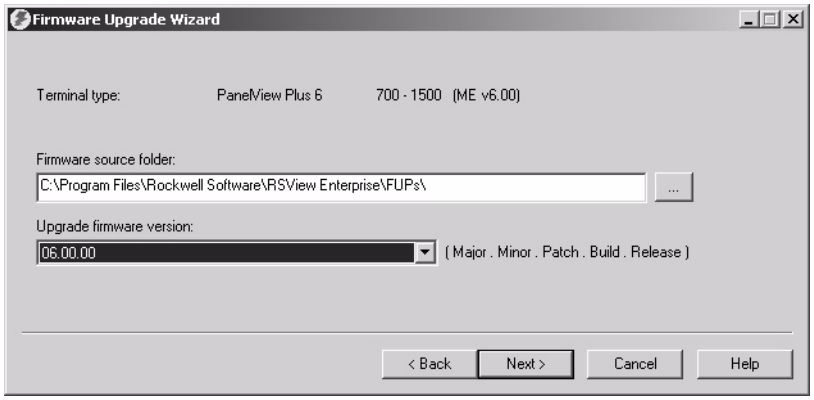

5. From this dialog, optionally select the KEPServer drivers you want installed on your terminal, then click Next.

The final dialog summarizes your choices for creating the firmware upgrade card.

6. Click Finish to copy the firmware files to the firmware upgrade card.

   A progress bar will automatically update as files are copied to the USB flash drive or SD card.

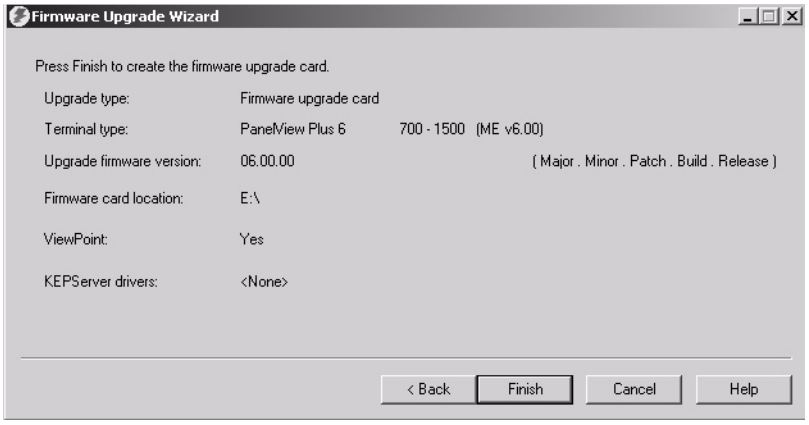

7. Click OK when the firmware upgrade completes successfully.

TIP If the firmware files were copied to a location on the hard drive, copy the files to the root directory of the USB flash drive or SD card.

8. Remove the USB flash drive or SD card from your computer.
9. Proceed to the next section to use this firmware upgrade card to upgrade the terminal firmware.

Upgrade Terminal Firmware Using Firmware Upgrade Card

Follows these steps to transfer firmware files from the USB flash drive or SD card to the terminal. This is the firmware upgrade card you just created.

IMPORTANT
- Do not remove or accidently disconnect the USB flash drive or SD card while a firmware upgrade is in process. This could corrupt the firmware and make the terminal unstable.
- Do not power off the terminal during a firmware upgrade.
- USB hubs can produce unexpected behavior and are not recommended.

1. Insert the USB flash drive or SD card into the appropriate slot on your terminal.

   The firmware upgrade automatically starts and displays this dialog.

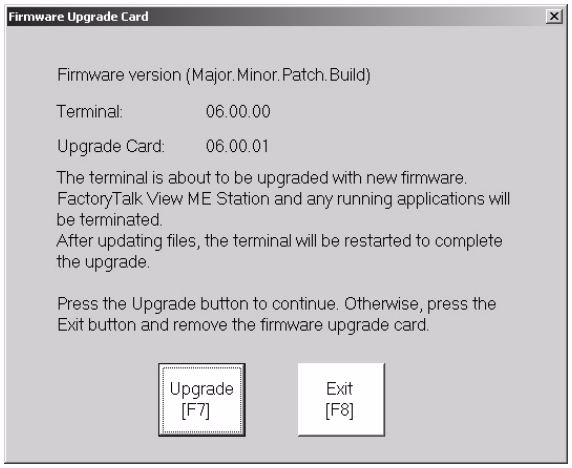

2. Press the Upgrade button or [F7] on the terminal to start the firmware upgrade.

   The terminal restarts and displays a progress bar during the upgrade.

   When the upgrade is complete, the terminal will restart, executing the new firmware.

3. Remove the USB flash drive or SD card from the terminal.

IMPORTANT If the firmware upgrade fails because of a power loss or the firmware upgrade card is inadvertently removed, you can restore the terminal to the factory default firmware. Refer to Access Maintenance Operations on page 169 for details on how to restore the factory default settings.

Upgrade Terminal Firmware over the Network

You can upgrade firmware in a terminal connected to a computer over a direct network connection. The network connection requires a computer running the Firmware Upgrade Wizard (FUW) and RSLinx Enterprise software, version 5.0 or later.

RSLinx Enterprise software is required so that you can select the terminal on the network.

Follow these steps to copy firmware files to the terminal over a network using RSLinx Enterprise software and Ethernet communication.

1. Run the Firmware Upgrade Wizard.
   - Choose Tools>Firmware Upgrade Wizard in FactoryTalk View Studio.
   - Choose Start>Programs>Rockwell Software>FactoryTalk View>Tools>ME Firmware Upgrade Wizard.
2. Select Upgrade firmware on terminal and click Next.

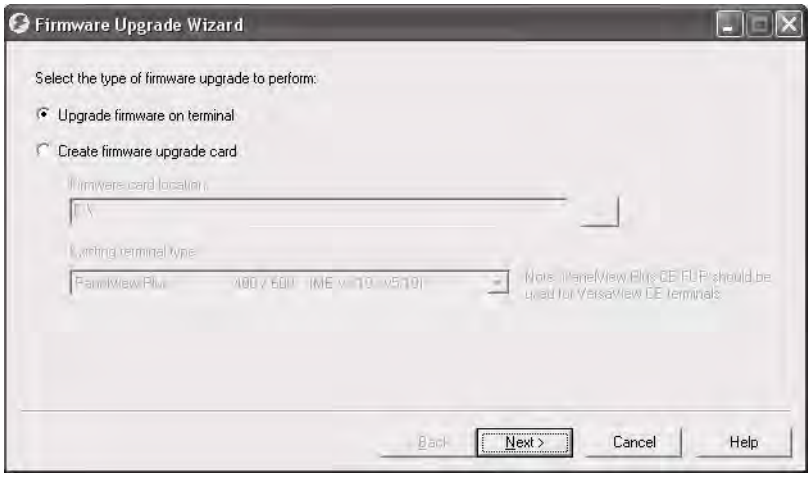

3. Click Yes to continue.

   It is not necessary to back up files on PanelView Plus 6 terminals.

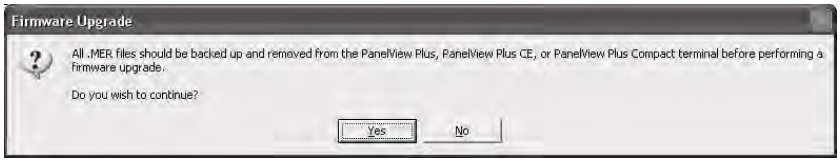

4. Select Network Connection (using RSLinx Enterprise) and click Next.

   This is the only valid selection for PanelView Plus 6 terminals.

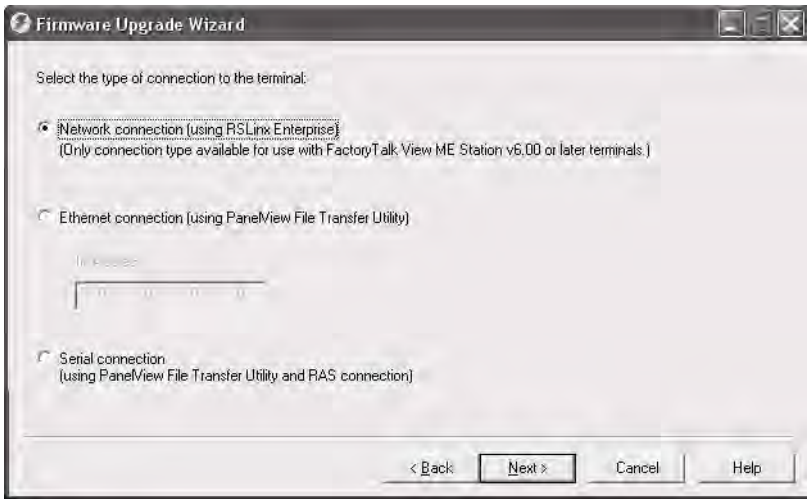

5. Navigate to and select the terminal to receive the firmware update, then click Next.

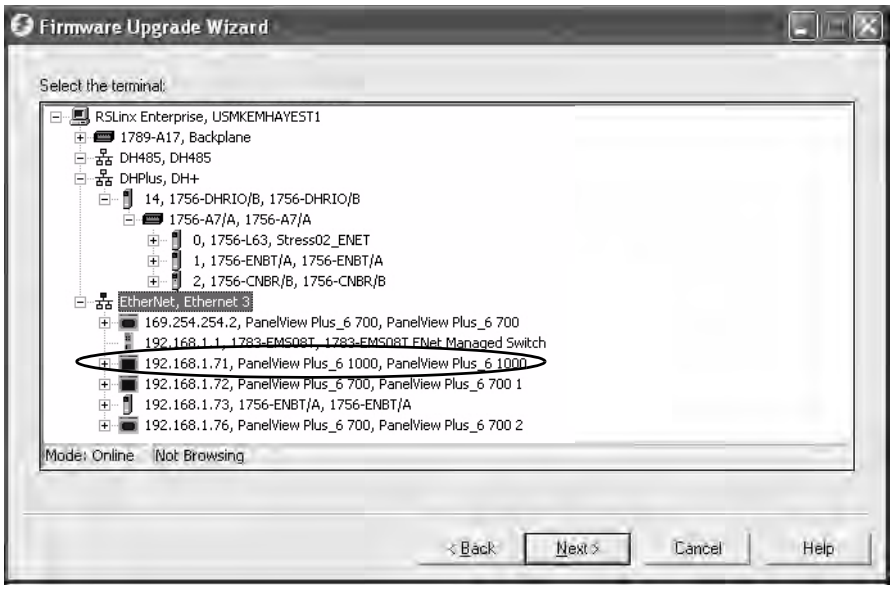

6. Follow these steps from this dialog box.
   a. Browse to the location of the firmware source files on your computer, where the FUP was installed.

      The default location is shown.
   b. Choose the version of the upgrade firmware from the pull-down list.
   c. Click Next.

      It may take several seconds for the next dialog to appear while the FUP is being retrieved.

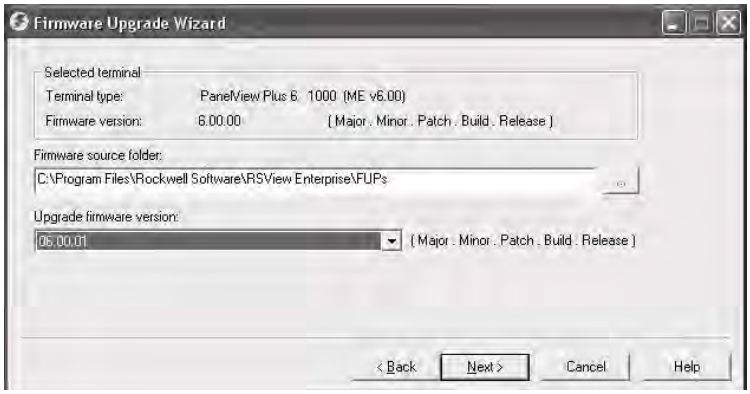

7. From this dialog, optionally select the KEPServer drivers you want installed on your terminal, then click Next.

The final dialog summarizes your choices for upgrading the terminal firmware.

8. Click Finish to update the firmware in the terminal.

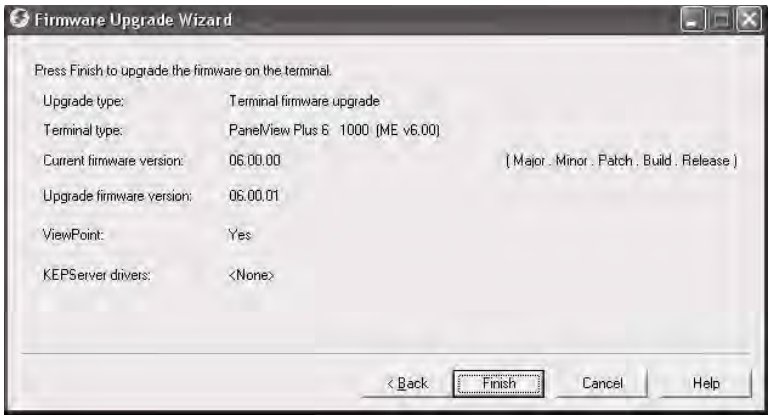

9. Click Yes to continue with the update.

   A progress bar will automatically update as firmware files are copied to the terminal.

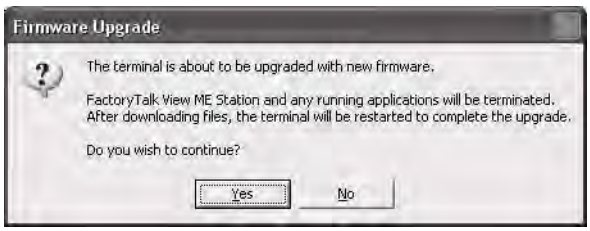

10. Click OK when the firmware upgrade is complete.

    The terminal will restart, executing the new firmware.

IMPORTANT If the firmware upgrade fails because of a power loss or some other reason, you can restore the terminal to the factory default firmware. Refer to Access Maintenance Operations on page 169 for details on how to restore the factory default settings.

Troubleshoot the System

Topic	Page
Status Indicators	159
Isolate the Anomaly	160
Start-up Messages and Codes	162
Check Terminal Components	164
Ethernet Connection	166
Program Launcher ActiveX Control	166
Application Does Not Run	167
Configuration Mode Access	167
File System Errors	167
Advanced Diagnostics	168
Access Maintenance Operations	169
Restore Factory Defaults	171

Status Indicators

The terminals have two status indicators to isolate operating anomalies:.

- COMM indicator (green) for communication
- FAULT indicator (red) for hardware and firmware faults

Figure 21 - Status Indicators

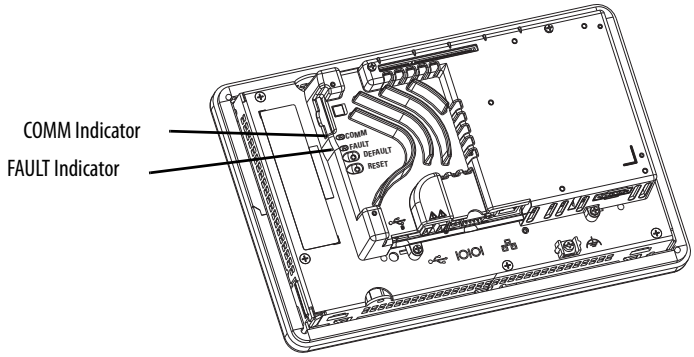

Isolate the Anomaly

This section provides general troubleshooting information to assist you when trying to isolate anomalies.

Check for Adequate Power

A terminal that does not receive adequate power could result in unpredictable behavior. Refer to Appendix A, Specifications, for power requirements.

Check Indicators at Startup

When the terminal starts, the fault and comm indicators flash on and off, then the comm indicator flashes to signal progress during startup. When startup is complete, the comm indicator remains on, and is controlled by the communication driver or application. The comm indicator typically flashes when communication is active.

If the indicators remain off, the power supply or logic module has failed. Check the power cable:

- If the power is not within range, replace the power supply.
- If the power is within range, replace the logic module.

The table shows indicator states if the terminal powers on and stops during startup.

Table 64 - Indicator States if Terminal Stops During Startup

Fault (Red) Indicator	Comm (Green) Indicator	Description
Blinking	Off	Recoverable firmware error. Last firmware download failed. Reload the firmware using the Firmware Upgrade Wizard (FUW).
On	Off	Non-recoverable hardware fault with logic module. Replace the logic module.
	Blinking	Non-recoverable hardware fault with display module. Replace the display module.

Check the Start-up Messages and Codes

Refer to Start-up Messages and Codes on page 162 for a list of message states and error codes that may appear on the splash screen during startup.

Check Voltages and Temperatures

Check the battery voltage, processor temperature, and display temperature:

- Battery voltage must be at least 2.75V DC. Replace the battery if the voltage is less than 2.75V DC.
- CPU (processor) temperature should be less than 95 °C (203 °F).
- Display temperatures should be less than 55 °C (131 °F).

From FactoryTalk View ME Station, do the following:

- Check the CPU temperature and battery voltage by selecting Terminal Settings>System Information>Terminal Information.
- Check the display temperature by selecting Terminal Settings>Display> Display Temperature.

From the desktop control panel, do the following:

- Open the Hardware Monitor applet and select the Monitors tab.

  This tab shows the battery voltage, processor temperature, and display temperature.

If the CPU and display temperatures are higher, check for obstructed airflow in the chassis and attempt to moderate the ambient temperatures within the enclosure and surroundings.

Check the System Event Log

Check the system event log for errors or unexpected behaviors:

- From FactoryTalk View ME Station, select Terminal Settings>System Event Log.
- From the control panel, open the Hardware Monitor applet and select the System Event Log tab.

Start-up Messages and Codes

The splash screen reports actions and status conditions that occur during startup. This includes firmware and hardware revision information.

Figure 22 - Splash Screen

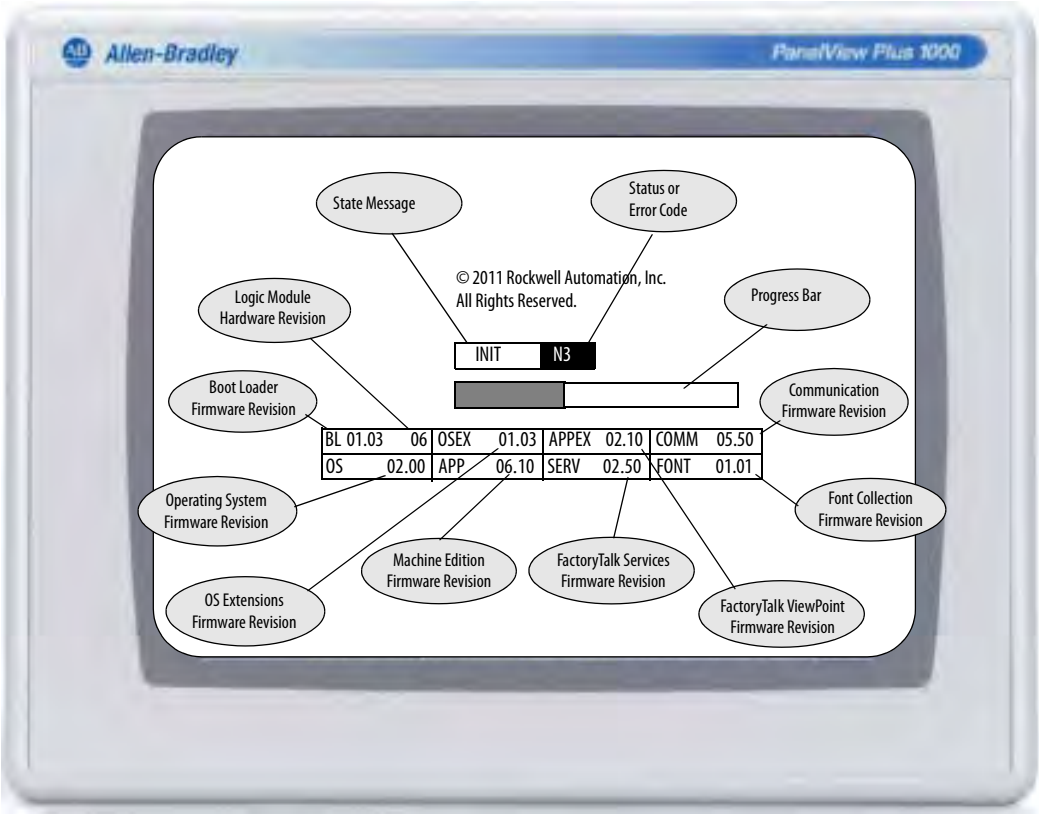

This table lists messages associated with each state and the corresponding status or error codes.

Table 65 - Start-up Messages and Codes

State Message Description	State Message	Code	Recommended Action
Common Start-up Messages			
Boot loader attempting PC connection via USB device	AutoTest	0A	Messages during this phase of startup are for information purposes only.
Boot loader loads firmware image into RAM	AutoTest	E6	
Boot loader jumps to operating system	AutoTest	FF	
Operating system starts up	Boot	G0	
Operating system registration and initialization	Init	H1 - JA	
Machine Edition registration and initialization	Init	K1 - MA	
Machine Edition load and execute	Init	ME	

Table 65 - Start-up Messages and Codes

State Message Description	State Message	Code	Recommended Action
Firmware Installation and Loading			
Load firmware image into RAM	Update	1E	Messages during firmware installation and loading are for information purposes only.
Write firmware image to storage	Update	A5	
Load factory-default firmware image into RAM	Restore	E6	
Write factory-default firmware image to storage	Restore	A5	
Restore factory-default configuration data	Restore	DC	
Firmware validation (CRC/format) failure	Fatal	1E	A fatal error during firmware installation or loading is usually recoverable by doing one of the following: • Reset terminal from maintenance menu • Restore factory defaults from maintenance menu See page 171 for details on how to perform a restore. • Re-install firmware Refer to Access Maintenance Operations on page 169 for details on resetting terminal and restoring factory defaults.
Firmware failed to validate compatibility index of a firmware region	Fatal	1F	
Firmware update failure	Fatal	0F	
Firmware write to storage failure	Fatal	A5	
Firmware stored image verification failure	Fatal	D2	
Invalid or missing OS firmware image	Fatal	FF	
Power on Self-test (POST) Failures			
Failed RAM	Fatal	03	A fatal error during POST is usually due to failed hardware: • For failed RAM, replace the logic module. • For stuck key, stuck touch, and failed backlight, replace the display module.
Stuck key	Fatal	31	
Stuck touch	Fatal	3A	
Failed backlight	Fatal	3B	
Restore Operation Failures			
Failed to initialize restore operation	Fatal	R0	A fatal error during a restore operation is usually recoverable by resetting the terminal from the maintenance menu. Refer to Access Maintenance Operations on page 169 for details on resetting the terminal.
Failed restore because of invalid header in .pvb file	Fatal	R1	
Failed restore because of invalid header	Fatal	R2	
Failed restore because of inability to write intermediate files to terminal	Fatal	R3	
Failed restored because of corrupt .pvb file	Fatal	R4	
Watch Dog			
Watch dog reset	Fatal	02	A watch dog reset is usually a momentary loss of control due to a software failure. Monitor this error for recurrence and remedial action.

Check Terminal Components

This section provides tips on how to isolate anomalies with the display, touch screen, keypad, attached keyboard, or mouse. If you are unable to resolve the anomaly, replace the display.

Table 66 - Resolve Anomalies with Display

Symptom	Recommended Action (1)
The display is dim or unreadable.	Check the brightness setting: • In FactoryTalk View ME Station, select Terminal Settings>Display>Display Intensity. • From the desktop control panel, open the Display applet and select the Backlight tab.
The backlight is turning off or dimming the display unexpectedly.	Check the screen saver settings: • In FactoryTalk View ME Station, select Terminal Settings>Display>Screen Saver. • From the desktop control panel, open the Display applet and select the Screen Saver tab.
A startup error appears during startup.	Record the message and check the startup error messages table.

(1) If you are unable to resolve the anomaly, replace the display.

Table 67 - Resolve Anomalies with Touch Screen

Symptom	Recommended Action (1)
The touch screen is not operating correctly.	Calibrate the touch screen: • In FactoryTalk View ME Station, select Terminal Settings>Input Devices>Touch Screen>Calibration. • From the desktop control panel, open the Touch applet and select the Calibration tab. The calibration requires five screen touches. When the touches do not converge to a satisfactory calibration, you are asked repeatedly for additional screen touches. The process continues until a valid calibration is performed. A touch screen that does not calibrate is not present or not functioning properly. Replace the touch-screen display module.
The display may not have a touch screen.	Check the catalog number of the unit. Verify that your display is a touch screen by looking at the label on the terminal.
The screen cursor is not visible.	Verify that the cursor is enabled: • In FactoryTalk View ME Station, select Terminal Settings>Display>Cursor. • From the desktop control panel, open the Display applet and select the Advanced tab.
The touch screen does not accept touch input.	Attach a USB mouse to check whether the anomaly is with the touch screen or the application: • If the mouse works, but the touch screen does not, then the touch driver or touch screen is not functioning properly. • If both the mouse and the touch screen are not working, then it is an application anomaly.
Touch input and dragging is inaccurate. The touch screen is present and working but requires calibration.	Calibrate the touch screen: • In FactoryTalk View ME Station, select Terminal Settings>Input Devices>Touch Screen>Calibration. • From the desktop control panel, open the Touch applet and select the Calibration tab.

(1) If you are unable to resolve the anomaly, replace the display module or bezel.

Table 68 - Resolve Anomalies with Mouse

Symptom	Recommended Action
The mouse is not operating correctly.	Check the USB cable and connection. Detach and then reattach the mouse. Cycle power to the terminal.
The screen cursor may not be visible or the mouse settings may need adjusting.	Check if the screen cursor is disabled: • In FactoryTalk View ME Station, select Terminal Settings>Display>Cursor. • From the desktop control panel, open the Display applet and select the Advanced tab. Check the mouse setting: • In FactoryTalk View ME Station, select Terminal Settings>Input Devices>Mouse. • From the desktop control panel, open the Mouse applet.
The mouse is a keyboard/mouse USB composite device.	Attach a standalone USB mouse.
The USB mouse may not be working or noncompliant.	Replace the USB mouse. Try a different model or manufacturer. If attaching a new mouse resolves the anomaly, then the old mouse was not working or is noncompliant. For a list of compatible USB devices, go to the knowledgebase at the Rockwell Automation technical support site http://www.rockwellautomation.com/support and search for ID 115072.

Table 69 - Resolve Anomalies with Keyboard

Symptom	Recommended Action
The keyboard does not work.	Check the USB cable and connector. Detach and reattach the keyboard. Verify a good connection. Cycle power to the terminal.
The keyboard is not accepting key input.	Check the key input using the keypad: • If the keypad works, but the keyboard does not, then the keyboard driver or keyboard is not working. • If both the keypad and keyboard are not working, then the issue is probably an application failure. Issues with keyboard input may be the fault of the application.the application: • Press a key outside the application such as an edit box in the shell. If the keypad works outside the application, then the application is at fault. • Press Ctrl+Esc simultaneously to open the Start menu, cursor to run, type numbers and viewable characters into the Run dialog.
The keyboard is a keyboard/mouse USB composite device.	Attach a standalone USB keyboard.
The USB keyboard may not be a compliant device.	Replace the USB keyboard. Try a different model or manufacturer. If a new keyboard resolves the issue, then the old keyboard was probably noncompliant. For a list of compatible USB devices, go to the knowledgebase at the Rockwell Automation technical support site http://www.rockwellautomation.com/support and search for ID 115072.

Ethernet Connection

This table provides tips on how to isolate Ethernet anomalies.

Table 70 - Resolve Ethernet Anomalies

Action	Description
Check the status indicators at the Ethernet connection	• Green indicates a communication link and should be on. • Amber indicates data activity and should be flashing. • Verify that there is a connection to the Ethernet hub/switch.
Check cable connections and quality of cable	Check for: • Cable crimping • Ethernet hub/switch connection • Uplink ports
Check the IP Address of the Built-in Ethernet Controller	• From FactoryTalk View ME Station, select Terminal Settings>Networks and Communications>Network Connections>Network Adapters. • From the desktop control panel, open the Network and Dial-up Connections control panel applet. If DHCP is enabled, the device expects a valid IP address to be acquired within a several seconds after startup. The TCP/IP protocol automatically assigns 169.254.nnn.nnn when it fails to acquire an IP address from the server. In general, an IP address that begins with 169 will not support a network connection. A bad Ethernet connection and the absence of a valid IP address are typically reported in a Communication error message box with the Winsock critical error 10065 - No route to host.
Check for conflicting IP addresses	If DHCP is not enabled, make sure the IP address you specify is not in conflict with the address of another device on the network.
Check the device name of the terminal	Do not allow devices on the network with same host name. • In FactoryTalk View ME Station, select Terminal Settings>Communications and Networks>Network Connections>Device Name. • From the desktop control panel, open the System applet and select the Device Name tab.
Contact your Network Administrator to check peer or server settings	The other side of the Ethernet connection may be an issue.
Check the requirements of network applications	Network applications may have specific requirements such as Proxy Settings for Internet Explorer and Ethernet Configuration for ActiveSync.
Check multi-homed devices	Multi-homed devices, more than one Ethernet node, can cause confusion and ambiguity. Keep the network connections as simple as possible.
From the desktop, use the network tools Ping.exe and Ipconfig.exe to diagnose issues with IP addresses and host devices.	These network utilities are diagnostic tools. • Ping is an Internet utility used to determine whether a particular IP address is reachable online by sending out a packet and waiting for a response. Ping is used to test and debug a network as well as see if a user or server is online. • IPconfig is a Windows command line utility that manages the IP address assigned to the machine it is running in. It displays the computer's currently assigned IP, subnet mask and default gateway addresses.

Program Launcher ActiveX Control

If desktop access is restricted and you use the Program Launcher - ActiveX control to launch a file viewer, text editor, or PDF reader, the system will lock up when you try to open a file.

To avoid this issue, associate a file with the application you are launching. The viewer, editor, or PDF reader will automatically launch with the associated file.

Application Does Not Run

If a terminal application does not run, there may be an issue with the FactoryTalk View Machine Edition (ME) application. Verify that a startup screen was configured and that the runtime file is a compatible version.

If the terminal application does not run at startup, try to run the application manually. If the application runs manually, then the operating system may be starting up with an invalid shortcut path. Check the shortcuts in the Windows startup folder.

\Windows\StartUp

Check the syntax of each shortcut path in the Startup folder and verify that a valid target application exists.

Check that the application is not missing components or required DLLs. Remove and reload the application.

Configuration Mode Access

To access Configuration mode while an application is running, your FactoryTalk View ME application must contain a screen with a Goto Configure Mode button. When the application is running, you can press this button to access Configuration mode.

If a running application does not contain a Goto Configure Mode button, you can access Configuration mode during startup in one of two ways:

- Enter Safe mode from the general Maintenance screens. Refer to page 169 for details.
- Detect a Safe mode request at startup by enabling this startup option in the System applet of the control panel. Refer to page 101 for details.

TIP If the terminal is configured to enter Configuration mode at startup and does not, then reload the firmware.

File System Errors

File system errors are rare and can usually be corrected. The internal file system is transaction-safe and is significantly more reliable than the FAT file system that supports the external, removable, USB and SD storage devices. Always stop applications before removing power so that data is cleanly flushed out to the file system and the file system is brought to an orderly stop.

Do not remove the external USB or SD storage devices while writing to the device is underway. Although the FactoryTalk View Machine Edition (ME) application runs from RAM, functions such as data logging, event logging, and historical trending, write to nonvolatile memory and should be stopped before removing power.

Advanced Diagnostics

Ping and ipconfig are valuable tools for network debugging along with some knowledge of IP and the Winsock error codes:

- Try to ping the destination host.
- Check the destination address.
- Check whether you have a router configured in your network system (your WinSock implementation).
- Use the tracert command at the command prompt on the desktop to try and determine where the failure occurs along the route between your host and the destination host.
- Take advantage of alternate connectivity - mouse versus touch screen, keyboard versus keypad, serial communication, and alternate Ethernet connections.
- Examine the folder \Windows\DumpFiles for crash logs when suspecting an application or operating system crash.

  The crash dump file is viewable offline, on a workstation, using common Windows development or debugging tools, for example, Visual Studio or WinDBG. At a minimum, the information in the crash dump file will reveal the date and time of the exception, the exception type, the name of the offending process and the register state, including the program counter.
- Store Autorun.exe utilities on an SD card that can be easily run by inserting the card in the SD card slot of the terminal.
- Know useful keyboard shortcuts so that you can navigate around the system without a mouse or touch screen.
- Check the system event log in the Hardware Monitor control panel application or under Terminal Settings>System Event Log in FactoryTalk View ME Station. Look for error conditions or reasons that might cause unexpected behaviors or restarts.
- Check the configuration settings in the desktop control panel applications or in FactoryTalk View ME Station.

Access Maintenance Operations

The terminal typically launches the Windows desktop or a FactoryTalk View ME application on startup. You can also start the system in Maintenance mode for diagnostic and repair purposes.

Follow these steps to access Maintenance actions at startup.

TIP Terminals require an attached USB keyboard to navigate in Maintenance mode.

1. Insert a thin, nonconductive probe into the hole marked Default on the back of the logic module and press the switch.

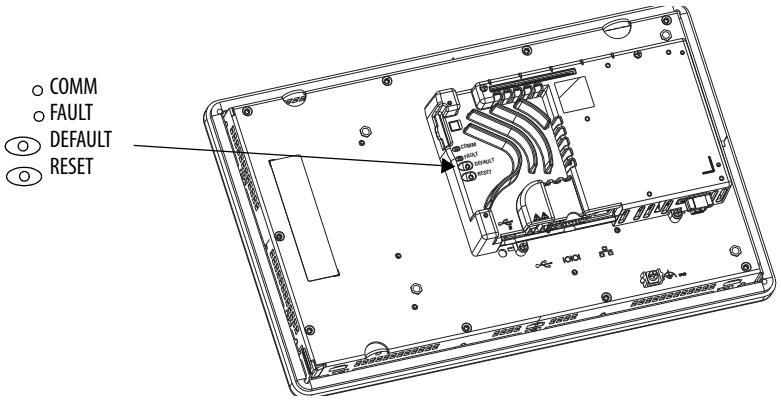

TIP To access this menu from a fault state, press the Reset switch, then press and hold the Default switch until you see the menu.

The terminal restarts in Maintenance mode with the display brightness set to 100%. Refer to Table 71 for a description of maintenance operations.

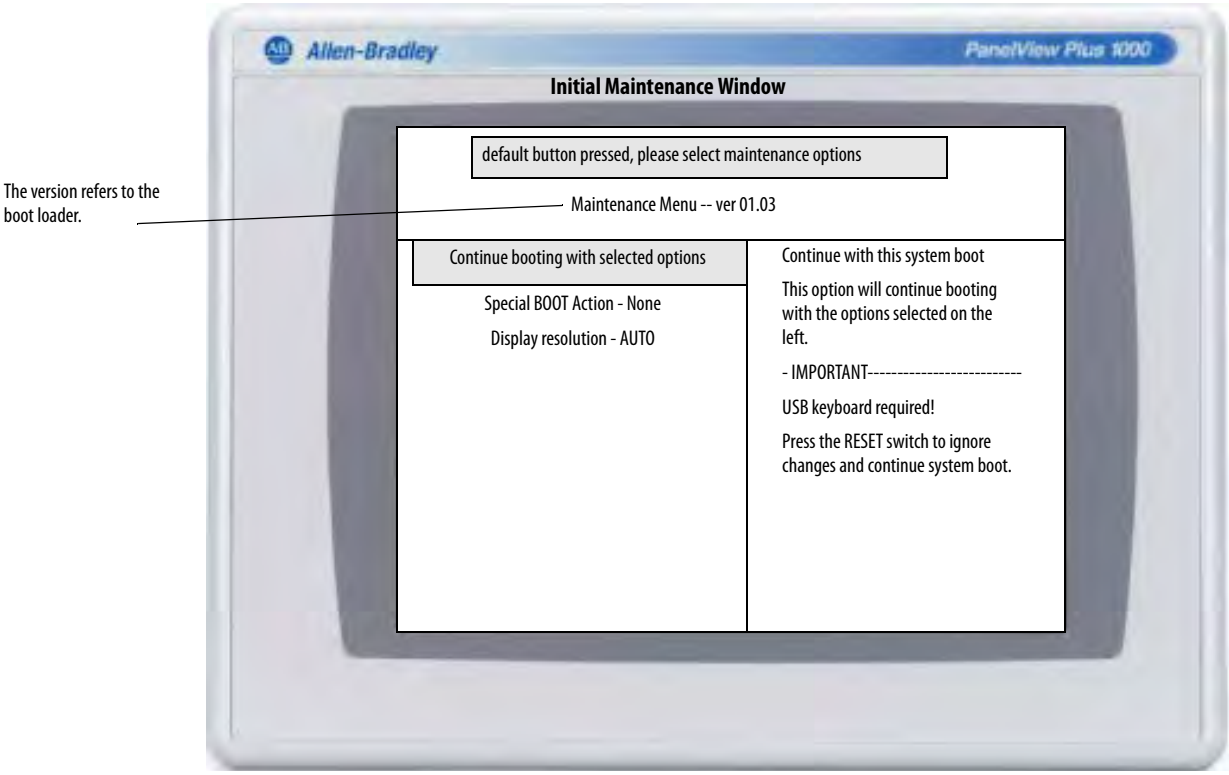

TIP Use the keys at the bottom of window to make selections.

2. Press the up and down arrow keys on the keypad or attached keyboard to move up and down the list or maintenance options:
   - Continue booting with selection option.
   - Special Boot Action
   - Display Resolution
3. With an option selected, press the right or left arrow keys to cycle through the available operations or settings.

   The result of each action is explained on the right.

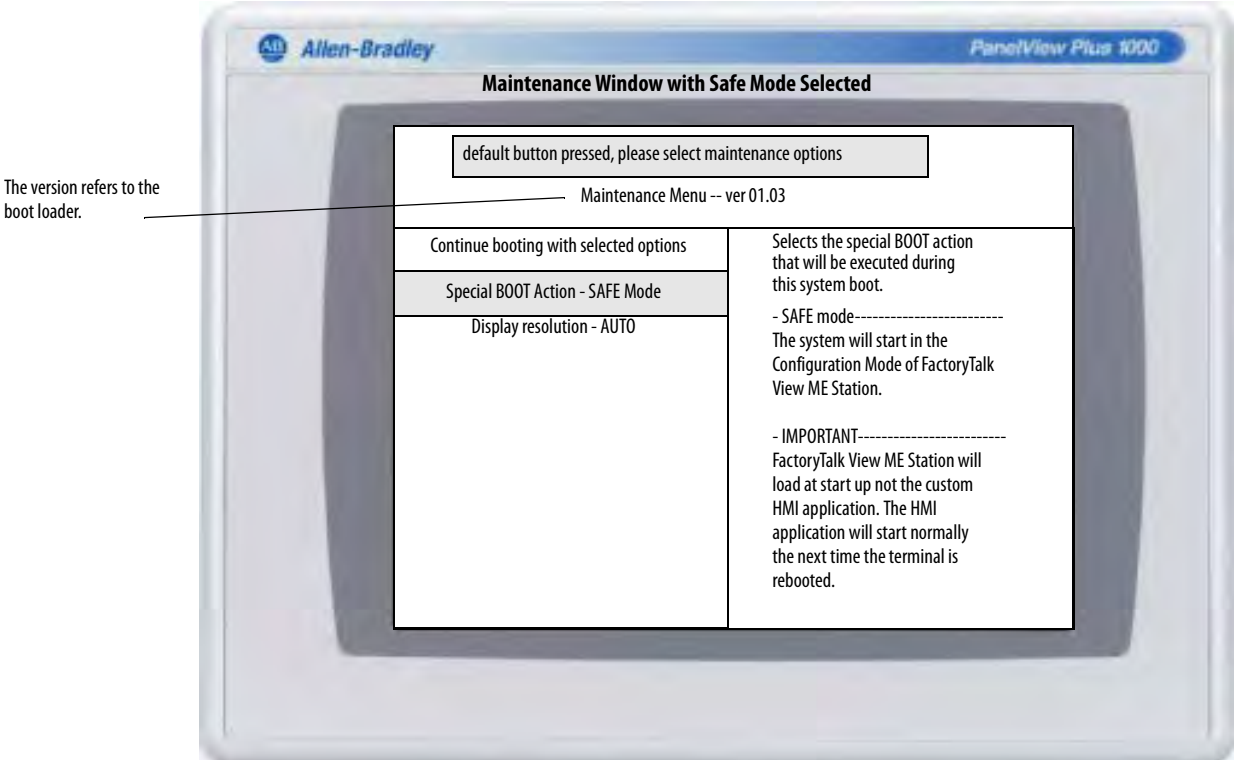

4. Follow these steps, when done making selections:
   a. Press the up arrow to return to ‘Select Continue booting with selected options’.
   b. Press the Enter key to continue booting.

Table 71 - Maintenance Startup Operations

Operation	Description
None	Exits Maintenance mode and continues with a normal restart.
Safe mode	Starts the system in Safe operating mode. This is a diagnostic mode with reduced functionality allowing for recovery from a software anomaly. In Safe mode, you can repair offending applications or changes that caused the anomaly. **Important:** FactoryTalk View ME Station will not run the HMI .mer application on startup if one is loaded, but will instead enter Configuration mode. The HMI application will run the next time the system is reset.
Restore factory defaults	Restores all storage media on the terminal to its initial factory default state, including firmware, registry, file system, and configuration data. Typically, this option is used to recover from a failed firmware upgrade. **Important:** All storage media is returned to its original state when purchased. All user-installed, firmware updates are removed. See Restore Factory Defaults on page 171 for details on how to perform a restore.
Reset terminal	Restores all user-accessible storage and configuration data on the terminal to its default state. The current firmware version is retained. **Important:** All storage media is returned to its original state when purchased except for the firmware. The latest FactoryTalk View ME image is retained. All user data changes or additions are lost.
Display resolution	Sets the startup, display resolution. If the system can't detect the resolution, you can choose the appropriate resolution by terminal model. • Auto - auto detects the display resolution. • VGA - sets the resolution to 640x480x16 for the 700 and 1000 terminals. • SVGA - sets the resolution to 800 x 600 x 16 for the 1250 terminals. • XVGA - sets the resolution to 1024 x 768 x 16 for the 1500 terminal.

Perform the maintenance operations in this order to diagnose and repair operating problems with your terminal.

1. Safe mode - stops an application from starting automatically.
2. Reset terminal - removes user-installed applications, user-configuration changes, and user-accessible data.
3. Restore factory defaults - returns the terminal to its original, out-of-box state.

Restore Factory Defaults

To recover from a firmware update failure, for example, fatal code 0F, you need to restore your terminal to its out-of-box, factory default state.

Follow these steps to restore factory defaults from Maintenance mode.

TIP Terminals require an attached USB keyboard to navigate in Maintenance mode.

1. While pressing and holding the Default switch on the back of the logic module, press and release the Reset switch.

   After releasing the Reset switch, release the Default switch to enter the maintenance menu.

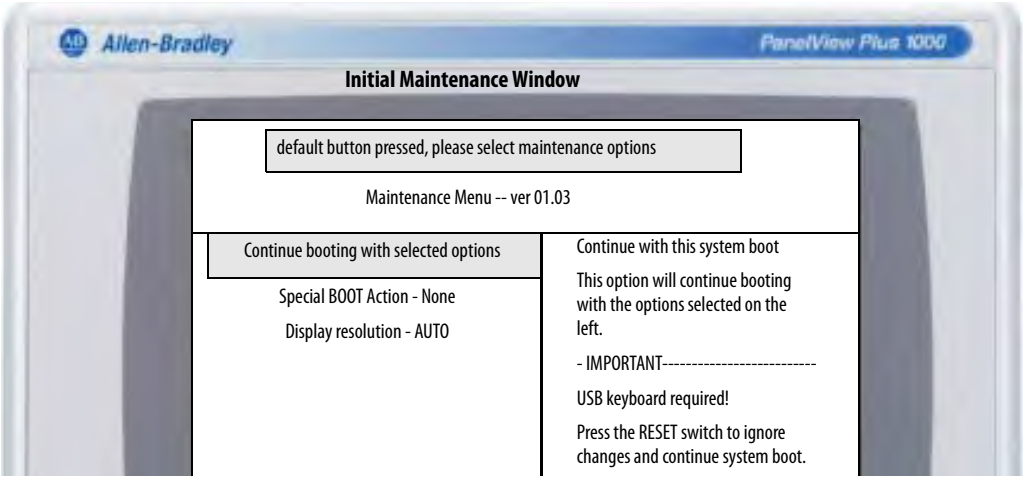

TIP Use the keys at the bottom of window to make selections.

2. Press the down arrow on the keyboard to select the following option:

   Special BOOT Action -None

3. Press the right arrow three times to select the following option:

   Special BOOT Action - Restore Factory Defaults.

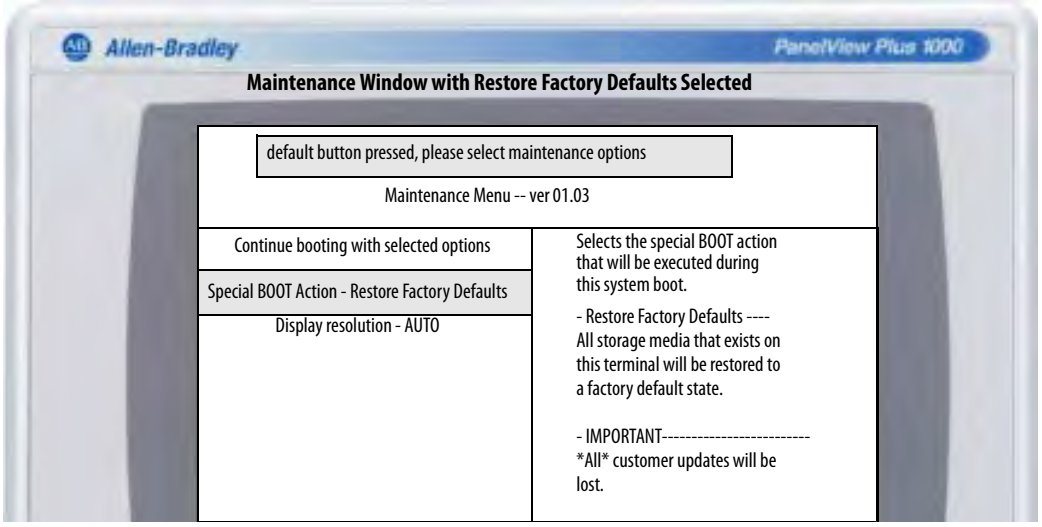

4. Press the up arrow to select "Continue booting with selected option".
5. Press Enter on your keyboard to initiate the factory default restore process.

   The terminal is returned to its out-of-box state, including the firmware, registry, file system, and storage areas. All user data is lost after the restore.

Specifications

Technical Specifications

Table 72 - Technical Specifications - 2711P-K*xxxx*8, 2711P-T*xxxx*8, 2711P-B*xxxx*8, 2711P-K*xxxx*9, 2711P-T*xxxx*9, 2711P-B*xxxx*9

Attribute	2711P-K*xxxx*8, 2711P-T*xxxx*8, 2711P-B*xxxx*8, 2711P-K*xxxx*9, 2711P-T*xxxx*9, 2711P-B*xxxx*9
Operating system	Microsoft Windows CE 6.0 R3
CPU	x86 - 1.0 GHz
Display type	Color active matrix, thin film transistor (TFT), liquid crystal display (LCD)
Display size 700 1000 1250 1500	 6.5 in. 10. 4 in. 12.1 in. 15 in.
Display area (WxH) 700 1000 1250 and 1250 high-bright 1500	 132 x 99 mm (5.2 x 3.9 in.) 211 x 158 mm (8.3 x 6.2 in.) 246 x 184 mm (9.7 x 7.2 in.) 304 x 228 mm (12.0 x 9.0 in.)
Resolution 700 1000 1250 and 1250 high-bright display 1500	 640 x 480, 18-bit color graphics 640 x 480, 18-bit color graphics 800 x 600, 18-bit color graphics 1024 x 768, 18-bit color graphics
Luminance, typical 700 to 1500 1250 high-bright	 300 cd/m^2 Nits 1000 cd/m^2 Nits
Backlight 700 to 1500 1250 high-bright	 CCFL 50,000 hours life, min Backlight not replaceable
Touch screen Actuation rating Operating force	Analog resistive 1 million presses 10…110 g
Keypad function keys [(1)] Actuation rating Operating force	Function keys, numeric and navigation 1 million presses 340 g
Real-time clock	Battery-backed, +/-2 minutes per month Battery life is 4 years min at 25 °C (77 °F)
Memory	512 MB nonvolatile memory, 512 MB RAM
Secure digital (SD) card	1 GB or 2 GB, cat. no. 1784-SD1 or 1784-SD2
Status indicators	COMM (green), Fault (red)

Table 72 - Technical Specifications - 2711P-K*xxxx*8, 2711P-T*xxxx*8, 2711P-B*xxxx*8, 2711P-K*xxxx*9, 2711P-T*xxxx*9, 2711P-B*xxxx*9

Attribute	2711P-K*xxxx*8, 2711P-T*xxxx*8, 2711P-B*xxxx*8, 2711P-K*xxxx*9, 2711P-T*xxxx*9, 2711P-B*xxxx*9
Electrical	
Input voltage, DC	24V DC nom (18…32V DC)
Power consumption, DC	70 W max (2.9 A at 24V DC) 39 W typical (1.6A @ 24V DC)
Input voltage, AC	85…264V AC
Line frequency	47…63 Hz
Power consumption, AC	160 VA max, 65 VA typical
External power supply, cat. no. 2711P-RSACDIN Input voltage, AC Line frequency Power consumption, AC	 85…264V AC 47…63 Hz 120 VA max
PCI slot, max power	DC supply: 5 W AC supply: 5 W
Weight, approx. for base-configured unit without communication module	
700 keypad or keypad/touch 700 touch	1.8 kg (4.1 lb) 1.7 kg (3.7 lb)
1000 keypad or keypad/touch 1000 touch	2.8 kg (6.2 lb) 2.5 kg (5.6 lb)
1250 keypad or keypad/touch 1250 touch	3.4 kg (7.5 lb) 3.2 kg (7.0 lb)
1500 keypad or keypad/touch 1500 touch	4.5 kg (9.9 lb) 4.2 kg (9.2 lb)
Dimensions, approx., (HxWxD) for base-configured unit without communication module	
700 keypad or keypad/touch 700 touch	193 x 290 x 55 mm (7.58 x 11.40 x 2.18 in.) 179 x 246 x 55 mm (7.04 x 9.68 x 2.18 in.)
1000 keypad or keypad/touch 1000 touch	248 x 399 x 55 mm (9.77 x 15.72 x 2.18 in.) 248 x 329 x 55 mm (9.77 x 12.97 x 2.18 in.)
1250 keypad or keypad/touch 1250 touch 1250 high-bright touch	282 x 416 x 55 mm (11.12 x 16.36 x 2.18 in.) 282 x 363 x 55 mm (11.12 x 14.30 x 2.18 in.) 282 x 363 x 74 mm (11.12 x 14.30 x 2.90 in.)
1500 keypad or keypad/touch 1500 touch	330 x 469 x 65 mm (12.97 x 18.46 x 2.55 in.) 330 x 416 x 65 mm (12.97 x 16.37 x 2.55 in.)

(1) Number of function keys varies by terminal size.

Environmental Specifications

Table 73 - Environmental Specifications - 2711P-K*xxxx*8, 2711P-T*xxxx*8, 2711P-B*xxxx*8, 2711P-K*xxxx*9, 2711P-T*xxxx*9, 2711P-B*xxxx*9

Attribute	2711P-K*xxxx*8, 2711P-T*xxxx*8, 2711P-B*xxxx*8, 2711P-K*xxxx*9, 2711P-T*xxxx*9, 2711P-B*xxxx*9
Temperature, operating	0…55 °C (32…131 °F)
Temperature, nonoperating	-25…70 °C (-13…158 °F)
Heat dissipation	240 BTU/hr.
Relative humidity	5…95% without condensation
Vibration	10…57 Hz, 0.012 PC-PC displacement 57…500 Hz, 2 g PC acceleration
Shock, operating	15 g at 11 ms
Shock, nonoperating	30 g at 11 ms
Enclosure ratings	NEMA/UL Type 12, 13, 4X (Indoor use only), and IEC IP54, IP65
Airborne contaminants	For PanelView Plus 6 conformal-coated PCBA level products with catalogs numbers ending in K, these apply: ANSI/ISA S71.04 - 1985 Severity Level G3 EN60654-4:1998 Class 3

Certifications

Table 74 - Certifications - 2711P-K*xxxx*8, 2711P-T*xxxx*8, 2711P-B*xxxx*8, 2711P-K*xxxx*9, 2711P-T*xxxx*9, 2711P-B*xxxx*9

Certification(1)	2711P-K*xxxx*8, 2711P-T*xxxx*8, 2711P-B*xxxx*8, 2711P-K*xxxx*9, 2711P-T*xxxx*9, 2711P-B*xxxx*9
c-UL-us	UL Listed Industrial Control Equipment, certified for use in US and Canada. See File E10314. UL Listed Industrial Control Equipment for use in: • Class I, Div 2, Group A, B, C, D • Class I, Zone 2, Group IIC (3) • Class II, Div 2 Groups F, G • Class III Hazardous Locations
CE (EMC)	European Union 2004/108/EC EMC Directive, compliant with: • EN 61000-6-2; Industrial Immunity • EN 61000-6-4; Industrial Emissions
CE (LVD)	European Union 2006/95/EC Low Voltage Directive, compliant with: • EN 61131-2; Programmable Controllers
C-Tick	Australian Radiocommunications Act, compliant with: AS/NZS CISPR 11; Industrial Emissions
Marine (2)	Components identified as marine-certified meet the requirements of one or more marine societies. For marine-certified components, refer to the Product Certification link below this table.

(1) When marked or otherwise declared. See the Product Certification link on http://www.ab.com for declarations of conformity, certificates, and other certification details.
(2) The touch and combination keypad/touch versions of the 700 and 1000 display modules and all logic modules are marine certified.
(3) Applies only to the 1250 high-bright display module.

Notes:

Fonts Resident on Terminal

True Type Fonts

The table lists true type fonts that are pre-installed on the terminals. The default system font is Tahoma.

TIP The Arial Unicode MS font contains almost 50,000 characters and provides default language support for many non-Latin languages and scripts including Arabic, Hebrew, Vietnamese, Thai, Hindi (Devanagari), and other Indic languages. The font also includes Chinese, Japanese, and Korean (CJK) support.

You can load additional fonts on the system by copying the font files to the \Windows\Fonts folder on the terminal. To access this folder, select the My Device icon on the desktop or choose Start>Programs>Windows Explorer.

Table 75 - True Type Fonts

True Type Fonts	File Name
Arial Unicode MS version 1.01	**arialuni.ttf**
Latin Fonts	
Arial	
Arial (Subset 1_30)	arial_1_30.ttf
Arial Black	arialk.ttf
Arial Bold	arialbd.ttf
Arial Bold Italic	arialbi.ttf
Arial Italic	ariali.ttf
Comic Sans MS	
Comic Sans MS	comic.ttf
Comic Sans MS Bold	comicbd.ttf
Courier New	
Courier New (Subset 1_30)	cour_1_30.ttf
Courier New Bold	courbd.ttf
Courier New Bold Italic	courbi.ttf
Courier New Italic	couri.ttf
Georgia	
Georgia	georgia.ttf
Georgia Bold	georgiab.ttf
Georgia Bold Italic	georgiaz.ttf
Georgia Italic	georgiai.ttf
Impact	impact.ttf
Kino	kino.ttf
Microsoft Logo	mslogo.ttf
Symbol	symbol.ttf

Table 75 - True Type Fonts

True Type Fonts	File Name
Tahoma	
Tahoma (Subset 1_07)	tahoma_1_07.ttf
Tahoma Bold	tahomabd.ttf
Times New Roman	
Times New Roman (Subset 1_30)	times_1_30.ttf
Times New Roman Bold	timesbd.ttf
Times New Roman Bold Italic	timesbi.ttf
Times New Roman Italic	timesi.ttf
Trebuchet MS	
Trebuchet MS	trebuc.ttf
Trebuchet MS Bold	trebucbd.ttf
Trebuchet MS Bold Italic	trebucbi.ttf
Trebuchet MS Italic	trebucit.ttf
Verdana	
Verdana	verdana.ttf
Verdana Bold	verdanab.ttf
Verdana Bold Italic	verdanaz.ttf
Verdana Italic	verdanai.ttf
Webdings	webdings.ttf
Wingding	wingding.ttf
PanelView Fonts	
PV 12 x 24, PV 12 x 8	PV12x24.tff, PV12x8.ttf
PV 16 x 24	
PV 18 x 16, PV 18 x 8	
PV 24 x 32	
PV 32 x 40, PV 32 x 64	
PV 4 x 6	
PV 6 x 16, PV 6 x 24, PV 6 x 8, PV 6 x 9	
PV 8 x 16, PV 8 x 20, PV 8 x 24	
PV Double High	PVdouble_high.ttf
PV Double Wide	PVdouble_wide.ttf
PV Extra Large	PVextra_large.ttf
PV Large	PVlarge.ttf
PV Small	PVsmall.ttf
PV Tiny	PVtiny.ttf
PV Very Tiny	PVvery_tiny.ttf
East Asian Fonts	
Gulim version 2.21 - Korean	gulim.ttc
MS Gothic version 2.30 - Japanese	gulim.ttc

Virtual Key Codes

Key Definitions

The tables in this appendix show the Windows virtual key codes for the function keys and the keypad keys on the terminals.

Table 76 - Function Key Virtual Key Codes

Win CE Standard (Winuser.h)			OEM Specific (SDKuser.h)		
Function Key	**Virtual Key Code**	**Hex**	**Function Key**	**Virtual Key Code**	**Hex**
F1	VK_F1	0x70	K1	PVP_VK_K1	0xC1
F2	VK_F2	0x71	K2	PVP_VK_K2	0xC2
F3	VK_F3	0x72	K3	PVP_VK_K3	0xC3
F4	VK_F4	0x73	K4	PVP_VK_K4	0xC4
F5	VK_F5	0x74	K5	PVP_VK_K5	0xC5
F6	VK_F6	0x75	K6	PVP_VK_K6	0xC6
F7	VK_F7	0x76	K7	PVP_VK_K7	0xC7
F8	VK_F8	0x77	K8	PVP_VK_K8	0xC8
F9	VK_F9	0x78	K9	PVP_VK_K9	0xC9
F10	VK_F10	0x79	K10	PVP_VK_K10	0xCA
F11	VK_F11	0x7A	K11	PVP_VK_K11	0xCB
F12	VK_F12	0x7B	K12	PVP_VK_K12	0xCC
F13	VK_F13	0x7C	K13	PVP_VK_K13	0xCD
F14	VK_F14	0x7D	K14	PVP_VK_K14	0xCE
F15	VK_F15	0x7E	K15	PVP_VK_K15	0xCF
F16	VK_F16	0x7F	K16	PVP_VK_K16	0xD0
F17	VK_F17	0x80	K17	PVP_VK_K17	0xD1
F18	VK_F18	0x81	K18	PVP_VK_K18	0xD2
F19	VK_F19	0x82	K19	PVP_VK_K19	0xD3
F20	VK_F20	0x83	K20	PVP_VK_K20	0xD4

Table 77 - Keypad Virtual Key Codes

Win CE Standard (Winuser.h)		
Function Key	**Virtual Key Code**	**Hex**
Numbers 0…9	VK_0…VK_9	0x30…0x39
Minus sign (-)	VK_Hyphen	0xBD
Decimal point (.)	VK_Period	0xBE
Backspace	VK_Back	0x08
Enter	VK_Return	0x0D
Previous	Terminal specific	0xD5
Next	VK_Tab	0x09
Shift	VK_Shift	0x10
Esc	VK_Escape	0x1B
Ctrl	VK_Control	0x11
Alt	VK_Menu	0x12
Left Arrow	VK_Left	0x25
Up Arrow	VK_Up	0x26
Right Arrow	VK_Right	0x27
Down Arrow	VK_Down	0x28

A

AC power
- connection 40
- functional earth ground 39
- protective earth 39

accessories
- adapter plates 24, 22
- backlights 22, 24
- communication modules 22
- display modules 21
- function key legend inserts 22
- logic modules 22
- mounting hardware 23
- power supply and terminal blocks 23
- SD cards 22
- solar visor 22

ActiveX controls 14, 77
- Program Launcher 166

adapter plates 24

advanced diagnostics 101

alarm display, enable or disable 77

antiglare overlays 22, 29

application
- checking integrity 72
- loading .MER 48
- running 48
- troubleshooting 167

B

backlight 22
- brightness 65, 95

backup and restore 89

backup terminal image 89

battery
- replacement 127
- warning on startup 99

battery voltage 75
- control panel 93
- FactoryTalk View ME 75

bezel replacement 24, 124

button styles 100

C

cables 136

catalog numbers
- accessories 22
- communication modules 22, 19
- display modules 21
- logic modules 22

CCFL backlight control 65

clearances 30

closed system 14

communication
- controller address 58
- ControlNet 147
- DH+/DH485 module 144, 145, 146
- Ethernet 142
- KEPServer 56, 112
- RSLinx Enterprise 56
- serial 139

communication module 16, 22
- installation 120
- replacement 121

configuration mode
- accessing 43
- loading application 48
- running application 48
- terminal settings 46

configured terminals 17
- catalog numbers 19
- PanelView Plus 6 19

control panel 88
- advanced diagnostics 101
- backup and restore 89, 93, 100
- cursor 96
- desktop background 95, 93
- keyboard and keypad settings 94
- logo updates 98
- network servers 103
- print set up 113, 93
- rotating images 97, 92
- screen saver 96, 99, 92
- touch screen calibration 94
- user accounts 102

ControlNet
- cables 149, 147
- ControlNet protocol 147
- overview 147
- Software Requirments 148

copying files
- applications 64
- font files 64

cursor
- control panel 96
- FactoryTalk View ME 66

D

date and time 78

DC power
- connection 38
- earth ground 37

default switch 169

deleting files
- applications 62
- font files 62
- log files 62

desktop access
- disable 53
- enable 52
- factory default state 15
- open versus closed 14
- reset password 54
- set password 54

device name 61

DH485
network connections 144
port connectors 144
status indicators 144
DHPlus
network connections 146
port connectors 144
status indicators 144
diagnostics
in FactoryTalk View ME 73
dimensions
panel cutout 30, 31
display brightness
FactoryTalk View ME 65
display module 16, 18, 21
cleaning 133
display settings
configuration mode 65, 95
FactoryTalk View ME 65
resolution 169
display temperature
control panel 93
FactoryTalk View ME 65

E

earth ground
DC power 37
enable desktop acess 52
environment and enclosure information 25
error messages 162
Ethernet
connector pinout 142
DHCP 59
IP address 58
link speed 60
name server addresses 60
port 17
status indicators 142
troubleshooting 166
extended features 14, 87
external power supply 37

F

factory defaults 169
FactoryTalk View Machine Edition Station 15
FactoryTalk View ME 56, 75, 77
alarm display enable or disable 77
battery voltage 75
check file integrity 72, 43, 66
diagnostics 72, 65
Ethernet settings 58
font linking 84
input devices 67, 45
IP address 58
keyboard or keypad settings 67
loading application 48
print options 70, 75
regional settings 80-83, 48
screen saver 66, 49, 67, 74, 77
terminal device name 61, 46, 77, 68, 62
FactoryTalk View Studio for ME 15
FactoryTalk ViewPoint 15
file server 87
configuration 112
file viewers 15, 87
firmware revisions 77
control panel 99
FactoryTalk View ME 77
firmware upgrades
firmware upgrade wizard 152
over network 156
recover from failure 163, 171
using storage device 153
fonts 177
linking 84
ftp server 87
anonymous login example 110
configuration 109, 111
security 109
function keys
function key legend inserts 22
virtual key code mapping 179

H

hazardous location 26
high-bright displays
antiglare overlay 29
installation 28
solar visor 29

I

IGMP Protocol 143
input devices
control panel 94
FactoryTalk View ME 67
mouse 67, 69
input panel 45
installation
backlight 129, 127, 124
clearances 30
environment and enclosure 25
hazardous location 26, 28
keypad legend inserts 132
mounting 32
panel cutouts 30, 31, 132
SD card 133
Internet Group Management Protocol (IGMP) 143

K

KEPServer 56
KEPServer configuration 112
keyboard
troubleshooting 164
keyboard and keypad settings
control panel 94
FactoryTalk View ME 67
keypad input 18

L

languages 80
loading application 48
logic module 16, 17, 22
replacement 120
logo manager 98
logs
application files 72
runtime files 72
system event log 74, 92, 161

M

maintenance operations
default switch 169
factory defaults 169
resolution 169
safe mode 169
marine-certified components 18, 21, 22
memory usage 75
control panel 93
FactoryTalk View ME 75
modular components 16
communication module 16
display module 16
logic module 16
mounting 32
hardware 23
mouse 67, 69
troubleshooting 164

N

NAP 149
network servers 87, 103
enabling or disabling 103
file 112, 109
vnc 104
web 108

O

open system 14
open versus closed system 14, 100
operating system 85
extended features 14
without extended features 14

P

panel cutout dimensions 30
password
destkop access 54
reset password 54
set password 54
PDF reader 116
pdf reader 15, 87
power connections
AC power 39
DC power 37
restart 42
terminal block 36
power supply and terminal blocks 23, 36
print setup
control panel 113
for alarms 70
processor temperature 75
control panel 93
FactoryTalk View ME 75
product dimensions 31
Program Launcher ActiveX Control 166
protective earth
AC power 39

R

regional settings
FactoryTalk View ME 80-83
reset switch 17, 41
reset terminal from maintenance window 171
restart system 41
restore factory defaults 169, 171
restore terminal image 89
right-click functionality on touch screen 86
rotating terminal images 97
RSLinx communication settings 56
run loaded application 48
runtime cables 136

S

safe mode 101, 171
screen saver
control panel 96
FactoryTalk View ME 66
SD card
installation 133
storage name 133
using to back up and restore image 89
serial communication
connections 139
DF1 139
null modem cable 140
ports 139, 142, 139
transferring applications 139
using a modem 140
servers
enabling or disabling 103
file 87, 112, 87, 109
UPnP 87
ViewPoint 87, 103, 104
web 87, 108
Simple Network Management Protocol (SNMP) 143
SNMP Protocol 143
software support
FactoryTalk View ME Station 15
Windows CE operating system 15
solar visor 22

specifications 173
- certifications 175
- environmental 175
- technical 173

startup
- anomalies 167
- error messages 162

startup options 15, 42
- advanced diagnostics 101
- changing button style 100, 99
- detecting safe mode 100, 49, 100, 101
- FactoryTalk View ME 49
- open or closed system 100
- run configuration mode 49, 50, 51

status indicators 17, 142, 159

storage media 133, 138

string entry 67

system event log 161
- control panel 92
- FactoryTalk View ME 74

system information
- control panel 99
- FactoryTalk View ME 77

T

task bar 115

temperature
- display 93
- logic module 93
- processor 75

terminal settings 46
- date 78, 73
- long date format 83
- short date format 82, 74
- time 78, 81, 79

time and date operations
- FactoryTalk View ME 77

touch screen 18

touch screen calibration
- control panel 94
- FactoryTalk View ME 68

transferring files 64

troubleshooting 159
- accessing configuration mode 167, 168
- change display resolution 169
- Ethernet connection 166
- general 160
- keyboard 164
- maintenance operations 169, 164
- power check 160
- restore factory defaults 169
- start in safe mode 169, 162, 159

U

UPnP server 87

USB flash drive
- loading 133
- storage name 133
- using to back up and restore image 90

USB ports 138
- connector pinouts 138
- device 17, 138
- host 17, 27, 138
- installation 27
- load USB flash drive 133

user accounts 102

V

VNC server 87
- client viewers 86, 104, 106, 104
- security 104
- view-only connection example 105, 104

voltage
- battery 75, 93

W

watchdog errors 101

web server 87
- configuration 108

Windows CE operating system 15, 85
- with extended features 14

Windows Explorer 115

wiring and safety guidelines 35, 135

Rockwell Automation Support

Rockwell Automation provides technical information on the Web to assist you in using its products. At http://www.rockwellautomation.com/support, you can find technical manuals, technical and application notes, sample code and links to software service packs, and a MySupport feature that you can customize to make the best use of these tools. You can also visit our Knowledgebase at http://www.rockwellautomation.com/knowledgebase for FAQs, technical information, support chat and forums, software updates, and to sign up for product notification updates.

For an additional level of technical phone support for installation, configuration, and troubleshooting, we offer TechConnect℠ support programs. For more information, contact your local distributor or Rockwell Automation representative, or visit http://www.rockwellautomation.com/support/.

Installation Assistance

If you experience a problem within the first 24 hours of installation, review the information that is contained in this manual. You can contact Customer Support for initial help in getting your product up and running.

United States or Canada	1.440.646.3434
Outside United States or Canada	Use the Worldwide Locator at http://www.rockwellautomation.com/support/americas/phone_en.html, or contact your local Rockwell Automation representative.

New Product Satisfaction Return

Rockwell Automation tests all of its products to ensure that they are fully operational when shipped from the manufacturing facility. However, if your product is not functioning and needs to be returned, follow these procedures.

United States	Contact your distributor. You must provide a Customer Support case number (call the phone number above to obtain one) to your distributor to complete the return process.
Outside United States	Please contact your local Rockwell Automation representative for the return procedure.

Documentation Feedback

Your comments will help us serve your documentation needs better. If you have any suggestions on how to improve this document, complete this form, publication RA-DU002, available at http://www.rockwellautomation.com/literature/.

Rockwell Otomasyon Ticaret A.Ş., Kar Plaza İş Merkezi E Blok Kat:6 34752 İçerenköy, İstanbul, Tel: +90 (216) 5698400

www.rockwellautomation.com

Power, Control and Information Solutions Headquarters

Americas: Rockwell Automation, 1201 South Second Street, Milwaukee, WI 53204-2496 USA, Tel: (1) 414.382.2000, Fax: (1) 414.382.4444
Europe/Middle East/Africa: Rockwell Automation NV, Pegasus Park, De Kleetlaan 12a, 1831 Diegem, Belgium, Tel: (32) 2 663 0600, Fax: (32) 2 663 0640
Asia Pacific: Rockwell Automation, Level 14, Core F, Cyberport 3, 100 Cyberport Road, Hong Kong, Tel: (852) 2887 4788, Fax: (852) 2508 1846

Publication 2711P-UM006B-EN-P - April 2012
Supersedes Publication 2711P-UM006A-EN-P - November 2010

Copyright © 2012 Rockwell Automation, Inc. All rights reserved. Printed in the U.S.A.

SAGINAW CONTROL & ENGINEERING
Your Enclosure Source ®

Saginaw Control & Engineering
95 Midland Road
Saginaw, MI 48638-5770
Phone: (800)234-6871
Fax: (989)799-4524
http://www.saginawcontrol.com

Part Information - SCE-FS1818

SCE-FS1818

Application -

Folding shelves can be installed on the inside or outside of large enclosures. They are designed to support test equipment and programmers. Locks in the horizontal position. When not in use, shelf can be folded down. Made of heavy gauge steel and powder coated white epoxy polyester. "SS" parts are stainless steel Type 304 with #4 brush finish.

Industry Standards - (IS17)

NEMA Not Applicable
UL Not Applicable
CSA N/A

Notes -

Provided with UL Recognized sealing washer to maintain Environmental Rating of the enclosure.

Product Specifications -

Part Number: SCE-FS1818
Description: Shelf, Folding
Height: 18.00"
Width: 18.00"
Depth: 1.75"
Price Code: P2
List Price: $183.79
Catalog Page: 299
Est. Ship Weight: 17.00 lbs

Download CAD Package
Add to Bill of Material

Similar Part Numbers -

SCE-FS1212 - Shelf, Folding
SCE-FS1212SS - Shelf, S.S. Folding
SCE-FS1818SS - Shelf, S.S. Folding
SCE-FS2424 - Shelf, Folding
SCE-FS2424SS - Shelf, S.S. Folding

Installation Information -

Folding Shelf Hole Pattern

Saginaw Control and Engineering
95 Midland Road
Saginaw, MI 48638-5770
(800)234-6871
Fax: (989)799-4524

SVX9000 Adjustable Frequency Drives

Modular, Configurable, Compact

EATON

Powering Business Worldwide

Multiple communication protocols allow connectivity to any existing automation system

- Modbus TCP
- EtherNet IP
- Modbus®
- PROFIBUS DP
- LonWorks
- CAN
- DeviceNet™

Seven built-in applications

Use for material handling, extruders, mixers, pumps, fans, cranes and more.

- Basic
- Standard
- Local/remote control
- Multi-step speed control
- PID control
- Multi-purpose control
- Pump and fan control with auto-changeover

Power module

- 3/4 hp to 2000 hp
- 208/230V, 480V, 575/690V
- Semiconductor technology
- Connections via multi-pole connector
- Remote mount with a fiber optic cable
- 208/230/480 Vac frame sizes 4–6 equipped with a built-in brake chopper

Power unit options:

- Input and output filters
- Brake resistors
- NEMA Type 1 (IP21) NEMA Type 12 (IP54)
- Open chassis frame 10 and larger

Power supplies

- +10 Vdc reference
- +24 Vdc auxiliary
- Encoder (+15 Vdc/+24 Vdc)

SVX9000 enclosures

- Standard NEMA Type 1 (IP21)
- Sealed NEMA Type 12 (IP54)(Metal cover, internal fan, conduit plate)

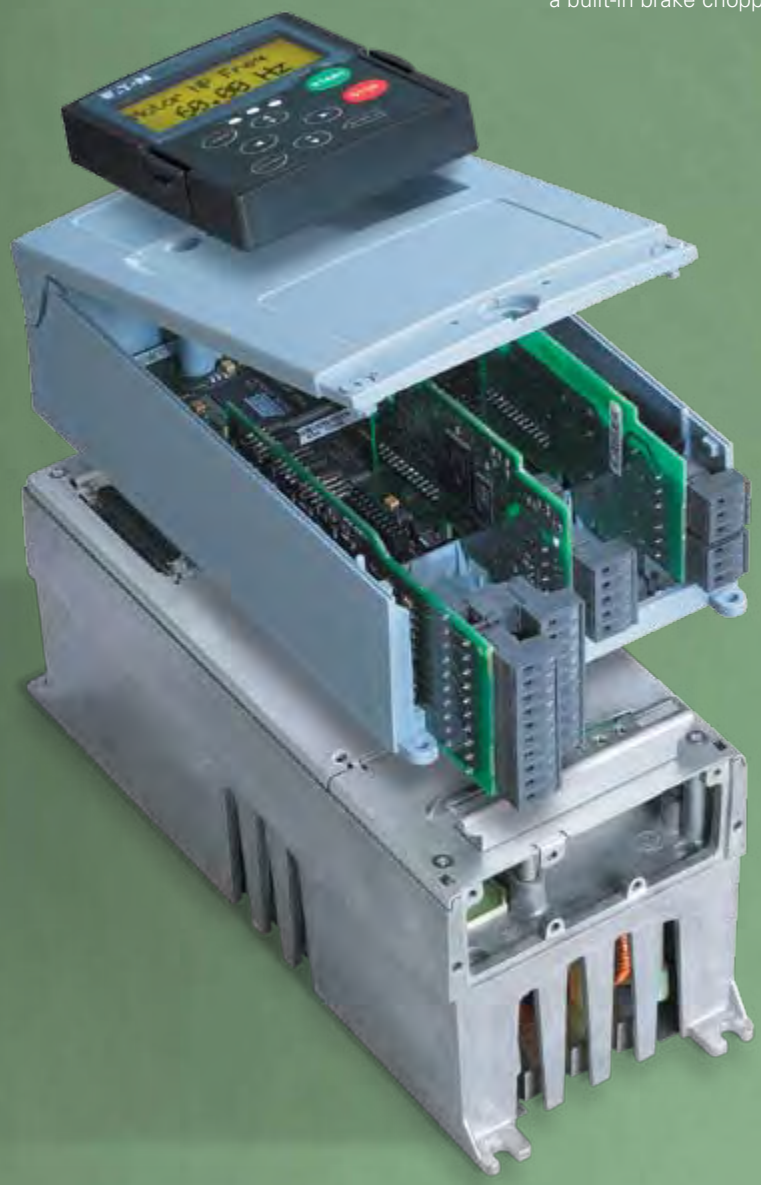

Modular, configurable and compact.

Eaton's SVX9000 adjustable frequency drives are the compact, modular solution to variable speed applications. They enable a broad range of new application capabilities. A complete selection of option cards allows you to configure the drive to meet any requirement. With its wide voltage range, high overload ability, and user-friendly alphanumerical keypad, SVX9000 drives are the smart decision for every user.

Modular design: convenient and cost effective.

Just three screws link the control module to the power module. What's more, control units are interchangeable within frame sizes while software, control panels, I/O and communication cards are common throughout the line. Separating the power and control units provides installation advantages and reduced spare parts requirements. For convenience, the SVX9000 is field convertible from Type 1 to Type 12 (frames 4–6). Its reduced size equates to less panel space used and easy retrofits.

Quick start-up wizard.

Even when the drive is unpowered, the SVX9000 can be programmed and tested. The control logic module can be powered from an external +24 Vdc source so you're ready to train, test and go live whenever needed. Whether you choose local or remote operations via the keypad, simple copy/paste functions streamline the process.

Communication flexibility.

The SVX9000 may be configured with several different communication protocols, making it easy to communicate with all commonly used control systems. The control unit's powerful microprocessor can be used for local control tasks, thereby freeing resources of the control system for other control tasks. 9000XEngine, our versatile block-programming tool, eliminates the need for a PLC and significantly simplifies the control system.

Optional I/O: configuration simplified.

Up to five plug-and-play I/O cards, each with unique input and output configurations, can be installed. Multiple analog and digital input and output cards and additional application-specific hardware are available.

PC Tools—drag and drop configuration. Store and access whenever needed.

9000XLoad

9000XLoad is an easy-to-use tool for uploading system, application and option card software intended for use by engineering, commissioning and service personnel. 9000XLoad is also suitable for loading custom applications to the SVX9000 drive.

9000XDrive

9000XDrive is a software tool that allows uploading and downloading drive parameters. Parameters can be changed, saved, and uploaded to any number of SVX9000 drives. The tool has the ability to print parameters or save them to a file for future use and reference. Parameters can be compared to default values to determine drive setup. Operator functions include the ability to set references, start and stop the drive, and to monitor signals and actual values. These values can be displayed via a graphic display.

9000XEngine

Create IEC 1131-3 compliant custom applications with 9000XEngine. This graphical design tool customizes the control logic and parameters in the SVX9000. Functional Block Diagram (FBD), Ladder Diagram (LD) and Structured Text (ST) are all part of the function set. 9000XEngine enables the creation of parameters, fault messages and other application-related features.

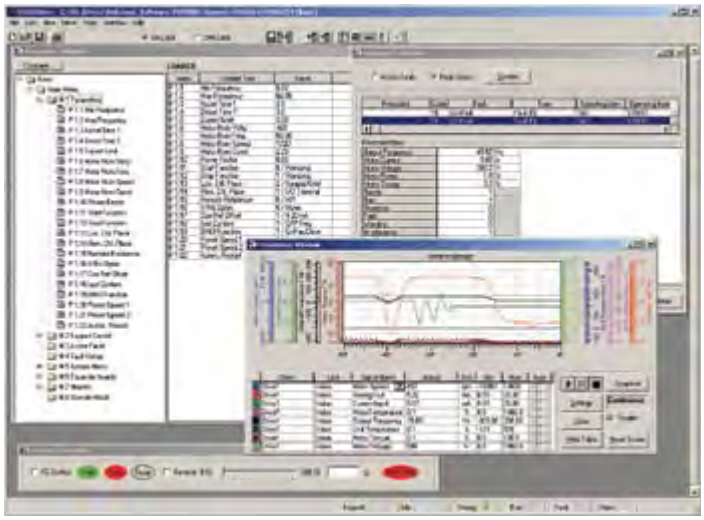

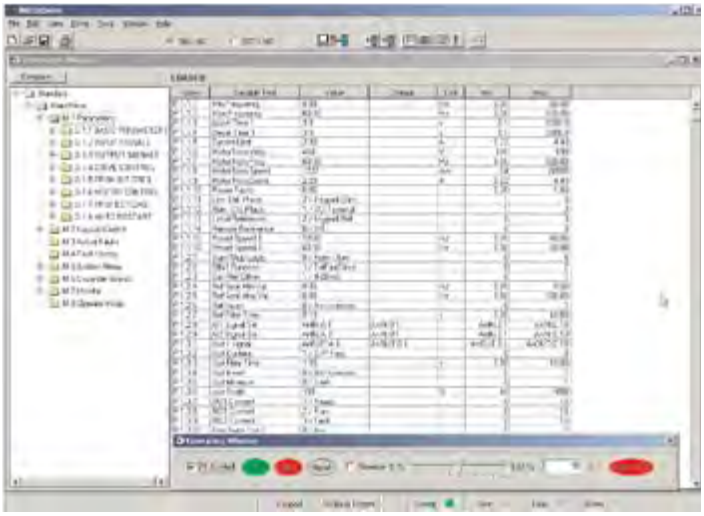

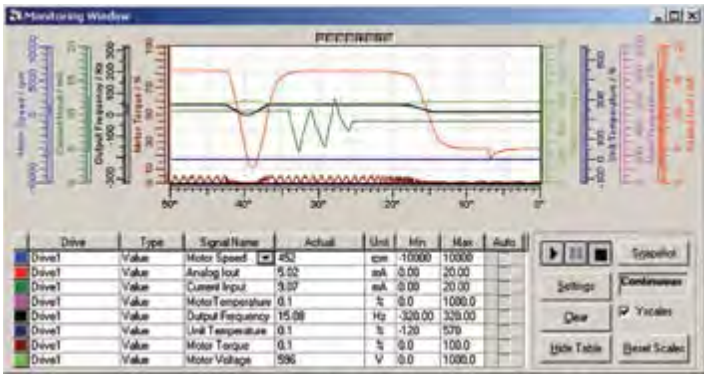

SVX9000 Series at a glance:

- Wide range of horsepower and voltage selection
- Start-up wizard
- Modular design concept
- External +24 Vdc can be used to power the controller
- Built-in 3% line reactor
- Open and enclosed drives (CT/I_H rated to 50˚C)
- 30-fault history with status at time of fault
- Easy operation

SPX9000 Series at a glance:

- High performance for demanding applications
- Increased micro-processing power (4 times more CPU capability)
- Encoder feedback
- High resolution analog inputs
- Speed and torque loop capability
- Customizable software
- Same ease of operation

The SVX9000 keypad and display unit.

The SVX9000 keypad offers the user a full view into the drive. The keypad provides the ability to view and change parameters, as well as monitor actual running values. Built in upload and download capability makes programming several SVX9000 drives a snap, cutting installation time. The three-line alphanumeric programmable display with status indicators uses English words for parameters, status, and diagnostic messages without the use of codes and lookup tables. The display has large, clear characters easily visible in any light condition.

Horsepower	Voltage Range	Enclosure Style
3/4 to 100 hp	208, 230V	Type 1, Type 12
1 to 200 hp	380, 480V	Type 1, Type 12
250 to 1900 hp	480V	Open Chassis
2 to 150 hp	575, 690V	Type 1, Type 12
200 to 2000 hp	575, 690V	Open Chassis

Eaton's Electrical Sector is a global leader in power distribution, power quality, control & automation and monitoring products. When combined with Eaton's full-scale engineering services, these products provide customer-driven PowerChain Management® solutions to serve the power system needs of the data center, industrial, institutional, government, utility, commercial, residential, IT, mission critical and OEM markets worldwide.

PowerChain Management solutions help enterprises achieve sustainable and competitive advantages through proactive management of the power system as a strategic, integrated asset throughout its life cycle, resulting in enhanced safety, greater reliability and energy efficiency. For more information, visit www.eaton.com/electrical.

Eaton Corporation
Electrical Sector
1111 Superior Ave.
Cleveland, OH 44114
United States
877-ETN-CARE (877-386-2273)
Eaton.com

© 2009 Eaton Corporation
All Rights Reserved
Printed in USA
Publication No. BR04003001E
September 2009

Powering Business Worldwide

PowerChain Management®

PowerChain Management is a registered trademark of Eaton Corporation.

All other trademarks are property of their respective owners.

SVX9000 Drives

Quick Start Guide

Effective November 2011
Supersedes December 2003

CONTENT

STEP 1 — Keypad Operation Overview
STEP 2 — Standard Wiring Diagrams and Connections
STEP 3 — Start-Up Wizard
STEP 4 — Operating and Programming Menu Navigation
STEP 5 — Faults and Warning Indication
STEP 6 — Monitoring Menu

EATON
Powering Business Worldwide

STEP 1

Keypad Operation Overview

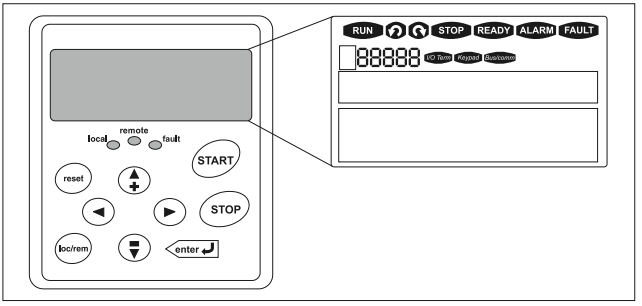

Keypad and Display

LCD Status Indicators

Indicator	Description
RUN	**Run** Indicates that the SVX9000 is running and controlling the load. Blinks when a stop command has been given but the SVX9000 is still ramping down.
	Counterclockwise Operation The output phase rotation is BAC, corresponding to counterclockwise rotation of most motors.
	Clockwise Operation The output phase rotation is ABC, corresponding to clockwise rotation of most motors.
STOP	**Stop** Indicates that the SVX9000 is stopped and not controlling the load.
READY	**Ready** Indicates that the SVX9000 is ready to be started.
ALARM	**Alarm** Indicates that there is one or more active drive alarm(s).
FAULT	**Fault** Indicates that there is one or more active drive fault(s).
I/O Term	**I/O Terminal** Indicates that the I/O terminals have been chosen for control.
Keypad	**Keypad** Indicates that the keypad has been chosen for control.
Bus/comm	**Bus/Communications** Indicates that the communications bus control has been chosen for control.

LED Status Indicators

Indicator	Description
local	**Local — Steady Illumination** Indicates that the SVX9000 is ready to be started and operated from the Local mode. **Local — Flashing** Indicates that the SVX9000 is ready for operating command to select Local or Remote operation.
remote	**Remote** Indicates that the SVX9000 is operating and controlling the load remotely. **Remote — Flashing** Indicates that the SVX9000 is ready for operating command to select Local or Remote operation.
fault	**Fault** Indicates that there is one or more active drive fault(s).

STEP 1 (Continued)

Navigation Buttons

Button	Description
START	**Start** This button operates as the START button for normal operation when the “Keypad” is selected as the active control.
enter	**Enter** This button is used in the parameter edit mode to save the parameter setting and move to the next parameter … • to reset the Fault History if pressed while in the “Fault History” menu. • to confirm the acceptance of a change. • to change a virtual button status while in the “Button” menu. • to confirm the start-up list at the end of the Start-Up Wizard. • when the “Operate” menu is active, to exit the “Operate” submenu.
STOP	**Stop** This button has two integrated operations. The button operates as STOP button during normal operation … • motor STOP from the keypad, which is always active unless disabled by the “StopButtonActive” parameter. • used to reset the active faults.
reset	**Reset** Resets the active faults.
loc/rem	**Local / Remote** Switches between LOCAL and REMOTE control for start, speed reference and reverse functions. The control locations corresponding to local and remote can be selected within an application.
◄	**Left Arrow** • navigation button, movement to left. • in parameter edit mode, exits mode, backs up one step. • cancels edited parameter (exit from a parameter edit mode). • When in “Operate” menu will move backward through menu. • At end of “Start-Up Wizard”, repeats the “Start-Up Wizard” setup menu.
►	**Right Arrow** • navigation button, movement to right. • enter parameter group mode. • enter parameter mode from group mode. • When in “Operate” menu will move forward through menu.
▲ + ▼ −	**Up and Down Arrows** • move either up or down a menu list to select the desired menu item. • editing a parameter/password, while the active digit/character is scrolled. • increase/decrease the reference value of the selected parameter. • in the “Operate” menu, will cause the display of the active reference source and value and allow its change if the keypad is the active reference source. Used to set the password (if defined) when leaving the “Operate” menu. • scroll through the “Active Faults” menu when the SVX9000 is stopped.

Menu Navigation

Navigation Tips

- To navigate within one level of a menu, use the up and down arrows.
- To move deeper into the menu structure and back out, use the right and left arrows.
- To edit a parameter, navigate to show that parameter’s value, and press the right arrow button to enter the edit mode. In edit mode, the parameter value will flash.

STEP 1 (Continued)

- When in edit mode, the parameter value can be changed by pressing the up or down arrow keys.
- When in edit mode, pressing the right arrow a second time will allow you to edit the parameter value digit by digit.
- To confirm the parameter change you must press the ENTER button. *The value will not change unless the ENTER button is pushed*.
- Some parameters can not be changed while the SVX9000 is running. The screen will display LOCKED if you attempt to edit these parameters while the drive is running. Stop the drive to edit these parameters. See the *SVX9000 Application Manual* for identification of these parameters specific to your chosen application.

Main Menu

The data on the control keypad are arranged in menus and submenus. The first menu level consists of M1 to M8 and is called the Main Menu. The Main Menu is illustrated on **Page 7**. Some of the submenus will vary for each application choice.

STEP 2

Standard Wiring Diagrams and Terminal Locations

Power and Motor Wiring Terminal Schematic for SVX9000 Drives

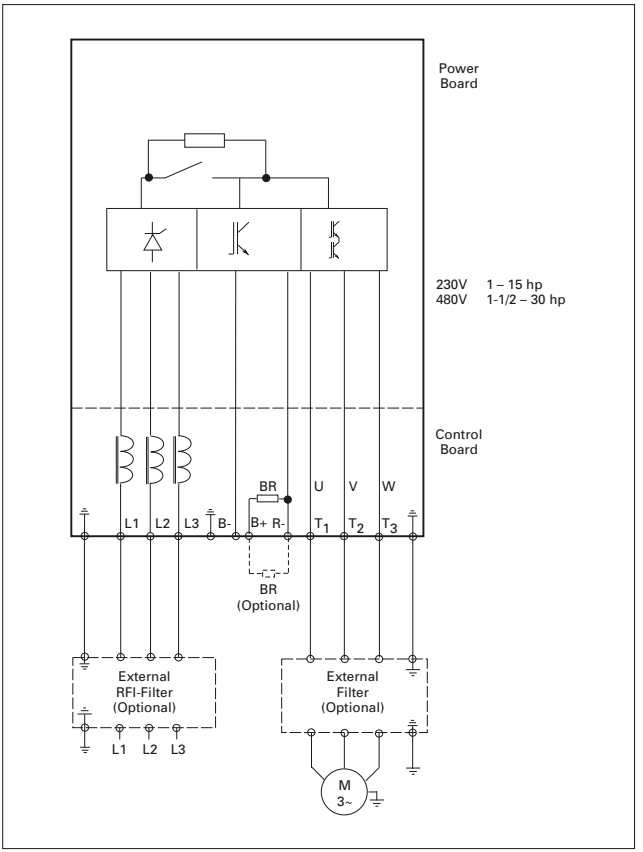

SVX9000 Power and Motor Wiring for Low Horsepower Drives (1 – 30 hp)

STEP 2 (Continued)

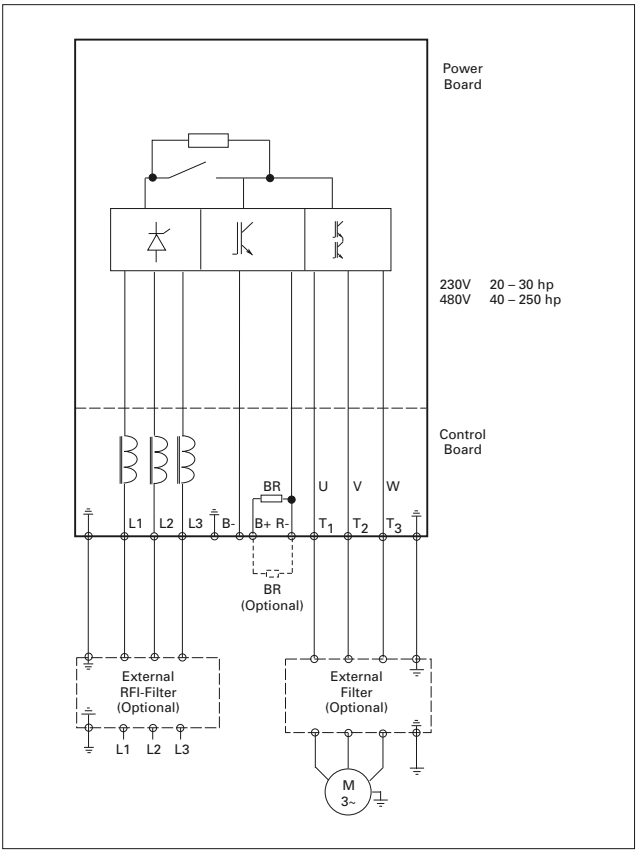

SVX9000 Power and Motor Wiring for Large Horsepower Drives (20 – 250 hp)

STEP 2 (Continued)

Standard Application Default I/O Configuration

Reference potentiometer 1 – 10 kW

Terminal		Signal	Description		
OPTA1					
1	$+10V_{ref}$	Reference output	Voltage for potentiometer, etc.		
2	AI1+	Analog input, voltage range 0 – 10V DC	Voltage input frequency reference		
3	AI1-	I/O Ground	Ground for reference and controls		
4	AI2+	Analog input, current range 0 – 20 mA	Current input frequency reference		
5	AI2-				
6	+24V	Control voltage output	Voltage for switches, etc. max 0.1A		
7	GND	I/O ground	Ground for reference and controls		
8	DIN1	Start forward (programmable)	Contact closed = start forward		
9	DIN2	Start reverse (programmable)	Contact closed = start reverse		
10	DIN3	External fault input (programmable)	Contact open = no fault Contact closed = fault		
11	CMA	Common for DIN1 – DIN3	Connect to GND or +24V		
12	+24V	Control voltage output	Voltage for switches (see #6)		
13	GND	I/O ground	Ground for reference and controls		
14	DIN4	Multi-step speed select 1	DIN4	DIN5	Frequency ref.
15	DIN5	Multi-step speed select 2	Open Closed Open Closed	Open Open Closed Closed	Ref.U_{in} Multi-step ref.1 Multi-step ref.2 Ref.I_{in}
16	DIN6	Fault reset	Contact open = no action Contact closed = fault reset		
17	CMB	Common for DIN4 – DIN6	Connect to GND or +24V		
18	AO1+	Output frequency Analog output	Programmable Range 0 – 20 mA/R_L, max. 500W		
19	AO1-				
20	DO1	Digital output READY	Programmable Open collector, I ≤ 50 mA, U ≤ 48V DC		
OPTA2					
21	RO1	Relay output 1 RUN			
22	RO1				
23	RO1				
24	RO2	Relay output 2 FAULT			
25	RO2				
26	RO2				

Note: For more information on jumper selections, see the *9000X AF Drives User Manual, Chapter 4.*

Jumper Block X3: CMA and CMB Grounding

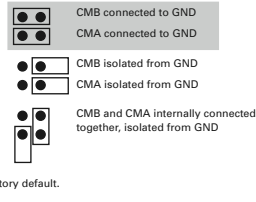

STEP 3

Start-Up Wizard

If the wizard is not enabled at power-up, press the STOP button for 5 secs. to enable it.

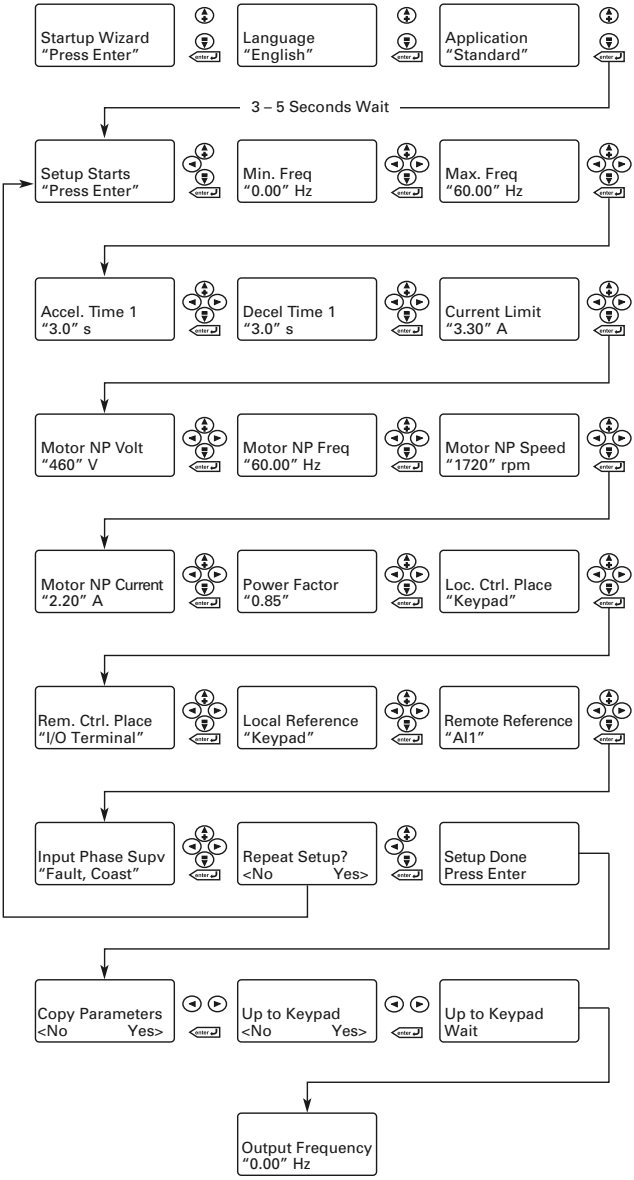

STEP 4

Operating & Programming Menu Navitation

Main Menu

The data on the control keypad are arranged in menus and submenus. The first menu level consists of M1 to M8 and is called the Main Menu. The structure of these menus and their submenus is illustrated below. Some of the submenus will vary for each application choice.

Main Menu Navigation

Menu Navigation:

Up Arrow — The up arrow advances to the next menu item.
For example, pressing the up arrow once will advance from M1 to M2.

Down Arrow — The down arrow backs up to the previous menu item.
For example, pressing the down arrow once will back up from M2 to M1.

Right Arrow — The right arrow will advance to the next level in the menu.
For example, pressing the right arrow once will advance from M2 to R2.1.

Left Arrow — The left arrow will back up one level in the menu structure.
For example, pressing the left arrow once will back up from R2.1 to M2.

- **M1 Parameters**
  - G1.1
  - . . .
  - G1.x
- **M2 Keypad Control**
  - R2.1 Keypad Reference
  - P2.2 Keypad Direction
  - . . .
  - P2.x Stop Button Active
- **M3 Active Faults**
  - A3.1 Active Fault 1
    - T3.1.1 Operation Days
    - . . .
    - T3.1.13 Zero Speed
  - . . .
  - A3.x Active Fault x
- **M4 Fault History**
  - H4.1 Most Recent Fault
    - T4.1.1 Operation Days
    - . . .
    - T4.1.13 Zero Speed
  - . . .
  - H4.1.x Oldest Saved Fault
- **M5 System Menu**
  - S5.1 Language
  - S5.2 Application
  - S5.3 Copy Parameters
  - S5.4 Compare Parameters
  - S5.5 Security
  - S5.6 Keypad Settings
  - S5.7 Hardware Settings
  - S5.8 System Information
- **M6 Expander Boards**
  - G6.1 Slot A Board
  - . . .
  - G6.5 Slot E Board
- **M7 Monitor**
  - V7.1 Output Frequency–0.00 Hz
  - V7.2 Frequency Reference–0.00 Hz
  - . . .
  - M7.1x Multimonitor
    - N7.1x.1
- **M8 Operate Mode**
  - O1 Output Frequency–0.0 Hz
  - O2 Freq Reference–0.0 Hz
  - . . .
  - Ox . . .

Note: Enter Key — Holding the "Enter" key for more than 3 seconds will allow you to go directly to the programming mode.

STEP 4 (Continued)

Operate Menu — M8

The Operate Menu provides a easy to use method of viewing key numerical Monitoring Menu items. Some applications also support the setting of reference values in this menu. The items displayed vary by application. The table below is an example for the Standard application.

Operate Menu Items — Standard Application Example

Code	Signal Name	Unit	Description
O.1	Output Frequency	Hz	Output frequency
O.2	FreqReference	Hz	Frequency reference
O.3	Motor Speed	rpm	Calculated motor speed
O.4	Motor Current	A	Measured motor current
O.5	Motor Torque	%	Calculated torque based on nominal motor torque
O.6	Motor Power	%	Calculated power based on nominal motor power
O.7	Motor Voltage	V	Calculated motor voltage
O.8	DC-Bus Voltage	V	Measured DC-bus voltage
O.9	Unit Temperature	°C	Heatsink temperature
O.10	MotorTemperature	%	Calculated motor temperature based on the motor nameplate information and the calculated motor load
R1	Keypad Reference	Hz	Keypad frequency reference setting

The menu is navigated by using the left and right arrow buttons. If a reference level is available for setting, the up and down arrow buttons adjust the value. To exit the Operate Menu to access the other menus, depress the ENTER button for 2 seconds. While in the other menus, if there is no keypad activity, the display will return to the Operate Menu after 30 seconds.

STEP 4 (Continued)

Parameters — M1

Standard Parameters — M1

Code	Parameter	Min.	Max.	Unit	Default	Cust	ID	Note
P1.1.1	Min frequency	0.00	Par. 1.1.2	Hz	0.00		101	
P1.1.2	Max frequency	Par. 1.1.1	320.00	Hz	60.00		102	**NOTE**: If f_{max} > than the motor synchronous speed, check suitability for motor and drive system.
P1.1.3	Acceleration time 1	0.1	3000.0	s	3.0		103	
P1.1.4	Deceleration time 1	0.1	3000.0	s	3.0		104	
P1.1.5	Current limit	0.1 x I_H	2 x I_H	A	I_L		107	
P1.1.6 ①	Nominal voltage of the motor	180	690	V	P: 230V P: 460V P: 575V		110	
P1.1.7 ①	Nominal frequency of the motor	30.00	320.00	Hz	60.00		111	Check the rating plate of the motor.
P1.1.8 ①	Nominal speed of the motor	300	20 000	rpm	1720		112	The default applies for a 4-pole motor and a nominal size frequency converter.
P1.1.9 ①	Nominal current of the motor	0.1 x I_H	2 x I_H	A	I_H		113	Check the rating plate of the motor.
P1.1.10 ①	Power Factor	0.30	1.00		0.85		120	Check the rating plate of the motor.
P1.1.11	Local Control Place	1	3		2		171	**1** = I/O Terminal **2** = Keypad **3** = Fieldbus
P1.1.12	Remote Control Place	1	3		1		172	**1** = I/O Terminal **2** = Keypad **3** = Fieldbus
P1.1.13 ①	Local reference	0	3		2		173	**0** = AI1 **1** = AI2 **2** = Keypad **3** = Fieldbus
P1.1.14 ①	Remote reference	0	3		0		174	**0** = AI1 **1** = AI2 **2** = Keypad **3** = Fieldbus
P1.1.15	Identification	0	2		0		631	**0** = Not used **1** = V/Hz **2** = V/Hz with boost
P1.1.16	V/Hz Opt	0	1		0		109	**0** = Not used **1** = Automatic torque boost
P1.1.17	Preset speed 1	0.00	Par. 1.1.2	Hz	10.00		105	Speeds preset by operator.
P1.1.18	Preset speed 2	0.00	Par. 1.1.2	Hz	40.00		106	

① Parameter value can only be changed after the drive has been stopped.

STEP 4 (Continued)

Input Signals — M1 → G1.2

Code	Parameter	Min.	Max.	Unit	Default	Cust	ID	Note
P1.2.1 ①	Start/Stop logic	0	6		0		300	**DIN1** / **DIN2** **0** Start fwd / Start rvs **1** Start/Stop / Rvs/Fwd **2** Start/Stop / Run enable **3** Start pulse / Stop pulse **4** Fwd ③ / Rvs ③ **5** Start ③/ Stop / Rvs/ Fwd **6** Start ③/ Stop / Run enable
P1.2.2 ①	DIN3 function	0	7		1		301	**0** = Not used **1** = Ext. fault. closing cont. **2** = Ext. fault. opening cont. **3** = Run enable **4** = Acc./Dec. time select. **5** = Force CP to Remote ④ **6** = Rvs (if par. 1.2.1 = 3)
P1.2.3	Current reference offset	0	1		1		302	**0** = 0 – 20mA **1** = 4 – 20mA
P1.2.4	Reference scaling minimum value	0.00	Par. 1.2.5	Hz	0.00		303	Selects the frequency that corresponds to the min. reference signal 0.00 = No scaling
P1.2.5	Reference scaling maximum value	0.00	320.00	Hz	0.00		304	Selects the frequency that corresponds to the max. reference signal 0.00 = No scaling
P1.2.6	Reference inversion	0	1		0		305	**0** = Not inverted **1** = Inverted
P1.2.7	Reference filter time	0.00	10.00	s	0.10		306	**0** = No filtering
P1.2.8 ②	AI1 signal selection				A.1		377	TTF programming method used.
P1.2.9 ②	AI2 signal selection				A.2		388	TTF programming method used.

① Parameter value can only be changed after the drive has been stopped.
② Use TTF method to program these parameters.
③ Rising edge required to start.
④ CP = control place.

Output Signals — M1 → G1.3

Code	Parameter	Min.	Max.	Unit	Default	Cust	ID	Note
P1.3.1 ①	Analog output 1 signal selection	0			A.1		464	TTF programming method used.
P1.3.2	Analog output function	0	8		1		307	**0** = Not used **1** = Output freq. (0 – f_{max}) **2** = Freq. reference (0 – f_{max}) **3** = Motor speed (0 – Motor nominal speed) **4** = Motor current (0 – I_{nMotor}) **5** = Motor torque (0 – T_{nMotor}) **6** = Motor power (0 – P_{nMotor}) **7** = Motor voltage (0 – U_{nMotor}) **8** = DC-Bus volt (0 – 1000V)
P1.3.3	Analog output filter time	0.00	10.00	s	1.00		308	**0** = No filtering

① Parameter value can only be changed after the drive has been stopped.

STEP 4 (Continued)

Output Signals — M1 → G1.3 (Continued)

Code	Parameter	Min.	Max.	Unit	Default	Cust	ID	Note
P1.3.4	Analog output inversion	0	1		0		309	**0** = Not inverted **1** = Inverted
P1.3.5	Analog output minimum	0	1		0		310	**0** = 0 mA **1** = 4 mA
P1.3.6	Analog output scale	10	1000	%	100		311	
P1.3.7	Digital output 1 function	0	16		1		312	**0** = Not used **1** = Ready **2** = Run **3** = Fault **4** = Fault inverted **5** = FC overheat warning **6** = Ext. fault or warning **7** = Ref. fault or warning **8** = Warning **9** = Reversed **10** = Preset speed 1 **11** = At speed **12** = Mot. regulator active **13** = OP freq. limit 1 superv. **14** = Remote Control Active **15** = Thermistor fault/warng **16** = Fieldbus input data
P1.3.8	Relay output 1 function	0	16		2		313	Same as parameter 1.3.7
P1.3.9	Relay output 2 function	0	16		3		314	Same as parameter 1.3.7
P1.3.10	Output frequency limit 1 supervision	0	2		0		315	**0** = No limit **1** = Low limit supervision **2** = High limit supervision
P1.3.11	Output frequency limit 1; Supervised value	0.00	320.00	Hz	0.00		316	
P1.3.12 ①	Analog output 2 signal selection	0			0.1		471	TTF programming method used.
P1.3.13	Analog output 2 function	0	8		4		472	Same as parameter 1.3.2
P1.3.14	Analog output 2 filter time	0.00	10.00	s	1.00		473	**0** = No filtering
P1.3.15	Analog output 2 inversion	0	1		0		474	**0** = Not inverted **1** = Inverted
P1.3.16	Analog output 2 minimum	0	1		0		475	**0** = 0 mA **1** = 4 mA
P1.3.17	Analog output 2 scaling	10	1000	%	100		476	

① Parameter value can only be changed after the drive has been stopped.

STEP 4 (Continued)

Drive Control Parameters — M1 ➔ G1.4

Code	Parameter	Min.	Max.	Unit	Default	Cust	ID	Note
P1.4.1	Ramp 1 shape	0.0	10.0	s	0.0		500	**0** = Linear **>0** = S-curve ramp time
P1.4.2	Ramp 2 shape	0.0	10.0	s	0.0		501	**0** = Linear **>0** = S-curve ramp time
P1.4.3	Acceleration time 2	0.1	3000.0	s	10.0		502	
P1.4.4	Deceleration time 2	0.1	3000.0	s	10.0		503	
P1.4.5 ①	Brake chopper	0	4		0		504	**0** = Disabled **1** = Used when running **2** = External brake chopper **3** = Used when stopped/ running **4** = Used when running (no testing)
P1.4.6	Start function	0	1		0		505	**0** = Ramp **1** = Flying start
P1.4.7	Stop function	0	3		1		506	**0** = Coasting **1** = Ramp **2** = Ramp+Run enable coast **3** = Coast+Run enable ramp
P1.4.8	DC braking current	0.00	I_L	A	0.7 x I_H		507	
P1.4.9	DC braking time at stop	0.00	600.00	s	0.00		508	**0** = DC brake is off at stop
P1.4.10	Frequency to start DC braking during ramp stop	0.10	10.00	Hz	1.50		515	
P1.4.11	DC braking time at start	0.00	600.00	s	0.00		516	**0** = DC brake is off at start
P1.4.12	Flux brake	0	1		0		520	**0** = Off **1** = On
P1.4.13	Flux braking current	0.1 x I_H	I_L	A	I_H		519	

① Parameter value can only be changed after the drive has been stopped.

Prohibit Frequencies — M1 ➔ G1.5

Code	Parameter	Min.	Max.	Unit	Default	Cust	ID	Note
P1.5.1	Skip frequency range 1 low limit	0.00	Par. 1.5.2	Hz	0.00		509	
P1.5.2	Skip frequency range 1 high limit	0.00	Par. 1.1.2	Hz	0.0		510	**0** = Skip frequency range 1 not used
P1.5.3	Skip frequency acc./dec. ramp	0.1	10.0		1.0		518	

STEP 4 (Continued)

Motor Control Parameters — M1 ➔ G1.6

Code	Parameter	Min.	Max.	Unit	Default	Cust	ID	Note
P1.6.1 ①	Motor control mode	0	1/6		0		600	**SVX:** **0** = Frequency control **1** = Speed control **Additionally for SPX:** **2** = Torque control **3** = Closed loop speed ctrl **4** = Closed loop torque ctrl
P1.6.2 ①	V/Hz optimization	0	1		0		109	**0** = Not used **1** = Automatic torque boost
P1.6.3 ①	V/Hz ratio selection	0	3		0		108	**0** = Linear **1** = Squared **2** = Programmable **3** = Linear with flux optim.
P1.6.4 ①	Field weakening point	8.00	320.00	Hz	60.00		602	
P1.6.5 ①	Voltage at field weakening point	10.00	200.00	%	100.00		603	n% x U_{nmot}
P1.6.6 ①	V/Hz curve midpoint frequency	0.00	Par. 1.6.4	Hz	60.00		604	
P1.6.7 ①	V/Hz curve midpoint voltage	0.00	100.00	%	100.00		605	n% x U_{nmot} Parameter max. value = par. 2.6.5
P1.6.8 ①	Output voltage at zero frequency	0.00	40.00	%	1.30		606	n% x U_{nmot}
P1.6.9	Switching frequency	1.0	Varies	kHz	Varies		601	See **Table 8-12** on page 57 for exact values
P1.6.10	Overvoltage controller	0	2		1		607	**0** = Not used **1** = Used (no ramping) **2** = Used (ramping)
P1.6.11	Undervoltage controller	0	1		1		608	**1** = Yes **2** = No
P1.6.12	Load Drooping	0.00	100.00		0.00		620	Drooping % of nominal speed at nominal torque
P1.6.13	Identification	0	1		0		631	**0** = Not used **1** = OL v/f Ratio **2** = OL v/f and Boost

① Parameter value can only be changed after the drive has been stopped.

Output Signals — M1 ➔ G1.3

Code	Parameter	Min.	Max.	Unit	Default	Cust	ID	Note
P1.7.1	Response to reference fault	0	6		6		700	**0** = No response **1** = Warning **2** = Warning+ Previous Freq. **3** = Wrng+ PresetFreq 1.7.2 **4** = Fault.stop acc. to 1.4.7 **5** = Fault.stop by coasting **6** = Fault, Restart

STEP 4 (Continued)

Protections — M1 → G1.7

Code	Parameter	Min.	Max.	Unit	Default	Cust	ID	Note
P1.7.2	Reference fault frequency	0.00	Par. 1.1.2	Hz	0.00		728	
P1.7.3	Response to external fault	0	3		2		701	**0** = No response **1** = Warning **2** = Fault.stop acc. to 1.4.7 **3** = Fault.stop by coasting
P1.7.4	Input phase supervision	0	3		3		730	
P1.7.5	Response to undervoltage fault	1	3		0		727	
P1.7.6	Output phase supervision	0	3		2		702	
P1.7.7	Earth fault protection	0	3		2		703	
P1.7.8	Thermal protection of the motor	0	3		2		704	
P1.7.9	Motor ambient temperature factor	-100.0	100.0	%	0.0		705	
P1.7.10	Motor cooling factor at zero speed	0.0	150.0	%	40.0		706	
P1.7.11	Motor thermal time constant	1	200	min	45		707	
P1.7.12	Motor duty cycle	0	100	%	100		708	
P1.7.13	Stall protection	0	3		0		709	**0** = No response **1** = Warning **2** = Fault.stop acc. to 1.4.7 **3** = Fault.stop by coasting
P1.7.14	Stall current	0.1	I_{nMotor} x 2	A	I_L		710	
P1.7.15	Stall time limit	1.00	120.00	s	15.00		711	
P1.7.16	Stall frequency limit	1.0	Par. 1.1.2	Hz	25.0		712	
P1.7.17	Underload protection	0	3		0		713	**0** = No response **1** = Warning **2** = Fault.stop acc. to 1.4.7 **3** = Fault.stop by coasting
P1.7.18	Field weakening area load	10	150	%	50		714	
P1.7.19	Zero frequency load	5.0	150.0	%	10.0		715	
P1.7.20	Underload protection time limit	2	600	s	20		716	
P1.7.21	Response to thermistor fault	0	3		2		732	**0** = No response **1** = Warning **2** = Fault.stop acc. to 1.4.7 **3** = Fault.stop by coasting
P1.7.22	Response to fieldbus fault	0	3		2		733	See P1.7.21
P1.7.23	Response to slot fault	0	3		2		734	See P1.7.21
P1.7.24	FB MCW Bit 15	0	2		0		771	**0** = No action **1** = Fault low **2** = Fault high

STEP 4 (Continued)

Auto Restart Parameters — M1 ➔ G1.8

Code	Parameter	Min.	Max.	Unit	Default	Cust	ID	Note
P1.8.1	Wait time	0.10	10.00	s	0.50		717	
P1.8.2	Trial time	0.00	60.00	s	30.00		718	
P1.8.3	Start function	0	2		0		719	**0** = Ramp **1** = Flying start **2** = According to par. 1.4.6
P1.8.4	Number of tries after undervoltage trip	0	10		0		720	
P1.8.5	Number of tries after overvoltage trip	0	10		0		721	
P1.8.6	Number of tries after overcurrent trip	0	3		0		722	
P1.8.7	Number of tries after reference trip	0	10		0		723	
P1.8.8	Number of tries after motor temperature fault trip	0	10		0		726	
P1.8.9	Number of tries after external fault trip	0	10		0		725	
P1.8.10	Number of tries after underload fault trip	0	10		0		738	

Keypad Control — M2

This menu provides the parameters for the setting of the keypad frequency reference, the selection of motor direction when in keypad operation, and when the STOP button is active.

Keypad Control Parameters — M2

Code	Parameter	Min.	Max.	Unit	Default	Cust	ID	Note
P2.1	Control place	0	3		0		1685	**0** = Keypad L/R **1** = Local **2** = Remote **3** = I/O force
R2.1	Keypad reference	Par. 1.1.1	Par. 1.1.2	Hz				
P2.3	Direction (on keypad)	0	1		0		123	**0** = Forward **1** = Reverse
P2.4	Stop button	0	1		1		114	**0** = Limited function of Stop button **1** = Stop button always enabled
P2.5	Operate menu hide	0	1		0		1688	**0** = No **1** = Yes

Other Menus — M3 to M6

Menus M3 to M6 provide information on the Active Faults, Fault History, System Menu settings and the Expander Board setup. These menu items are explained in detail in Chapter 5 of the *SVX9000 User Manual*.

STEP 5

Faults and Fault Codes

Code/Fault Directory

Fault Code	Fault	Fault Code	Fault	Fault Code	Fault
1	Overcurrent	**16**	Motor overtemperature	**40**	Device unknown
2	Overvoltage	**17**	Motor underload	**41**	IGBT temperature
3	Ground (Earth) Fault	**22**	EEPROM checksum fault	**42**	Brake resistor overtemperature
5	Charging Switch	**24**	Counter fault	**43**	Encoder fault
6	Emergency stop	**25**	Microprocessor watchdog fault	**44**	Device change (different type)
7	Saturation trip	**26**	Startup prevented	**45**	Device added (different type)
8	System fault	**29**	Thermistor fault	**50**	Analog input I_{in} < 4 mA (for the signal range 4 to 20 mA)
9	Undervoltage	**31**	IGBT temperature (hardware)	**51**	External fault
10	Input line supervision	**32**	Fan heat sink	**52**	Keypad communication fault
11	Output phase supervision	**34**	CAN bus communication	**53**	Communication bus fault
12	Brake chopper supervision	**36**	Control unit	**54**	Slot fault
13	SVX9000 undertemperature	**37**	Device change (same type)	**56**	PT100 board temperature fault
14	SVX9000 overtemperature	**38**	Device added (same type)	**—**	—
15	Motor stalled	**39**	Device removed	**—**	—

STEP 6

Monitoring Menu — M7

The Monitoring Menu items are meant for viewing parameter values during operation. Monitored values are updated every 0.3 sec. Monitored items are identified by item numbers V7.1 to V1.xx, where "xx" varies by application. The table below provides an example of the monitored values for the **Standard** application.

Monitored parameters are not editable from this menu (See Parameter Menu [M1] to change parameter values).

Monitoring Menu Items — Standard Application Example

Code	Signal Name	Unit	Description
V7.1	Output Frequency	Hz	Output frequency
V7.2	Frequency reference	Hz	Frequency reference setting
V7.3	Motor speed	rpm	Calculated motor speed
V7.4	Motor current	A	Measured motor current
V7.5	Motor torque	%	Calculated torque based on nominal motor torque
V7.6	Motor power	%	Calculated power based on nominal motor power
V7.7	Motor voltage	V	Calculated motor voltage
V7.8	DC bus voltage	V	Measured DC-bus voltage
V7.9	Unit temperature	°C	Heatsink temperature
V7.10	Calculated motor temperature	°C	Calculated motor temperature based on the motor nameplate information and the calculated motor load
V7.11	Analog Input 1	V	Voltage input at Terminals AI1+ and GND
V7.12	Analog input 2	mA	Current input at Terminals AI2+ and AI2-
V7.13	DIN1, DIN2, DIN3	—	Digital input status (see figure below)
V7.14	DIN4, DIN5,DIN6	—	Digital input status (see figure below)
V7.15	DO1, RO2, RO3	—	Digital and relay output status (see figure below)
V7.16	Analog I_{out}	mA	Current output at Terminals AO1+ and AO1-
V7.17	Multimonitor		(See below)

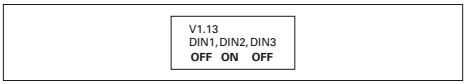

Digital Inputs — DIN1, DIN2, DIN3 Status

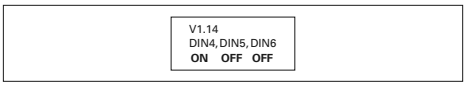

Digital Inputs — DIN4, DIN5, DIN6 Status

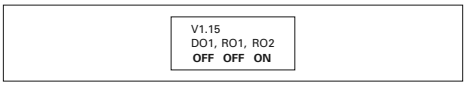

Digital and Relay Outputs — DO1, RO1, RO2 Status

Multimonitor (V7.17)

This parameter allows the viewing and selection (if allowed by System menu item, P5.5.4) of three simultaneously monitored items from the Monitored Menu Items shown in the table above. Use the right arrow key to select the item to be modified and then the up or down arrow keys to select the new item. Press the ENTER key to accept the change.

Eaton is dedicated to ensuring that reliable, efficient and safe power is available when it's needed most. With unparalleled knowledge of electrical power management across industries, experts at Eaton deliver customized, integrated solutions to solve our customers' most critical challenges.

Our focus is on delivering the right solution for the application. But, decision makers demand more than just innovative products. They turn to Eaton for an unwavering commitment to personal support that makes customer success a top priority. For more information, **visit www.eaton.com/electrical.**

Eaton Corporation
Electrical Sector
1111 Superior Ave.
Cleveland, OH 44114
United States
877-ETN-CARE (877-386-2273)
Eaton.com

© 2011 Eaton Corporation
All Rights Reserved
Printed in USA
Publication No. MN04003009E / Z11191
November 2011

Eaton is a registered trademark of Eaton Corporation.

All other trademarks are property of their respective owners.

Powering Business Worldwide

SureCall Wide Band Outdoor Omni Antenna

SC-288W User Guide

- Wide Band (698 – 2700 MHz) Broadband
- 2G/3G/4G and WLAN systems
- Designed for outdoor use only
- Omni-directional antenna 3-4 dB Gain

Overview

The SC-288W wide band fiberglass antenna is an omni-directional antenna that can receive and send signals from 360° and does not need to be pointed toward a cellular tower. Range of antenna is approximately 30 miles to and from cellular towers free of obstructions.

Besides the antenna itself, parts include mounting equipment for either a flat horizontal surface or a wall. It should be mounted in an upright position for best results.

Installation

Place antenna through the hole on the top of the L-Bracket.

Attached 3 screws through the L-Bracket and into holes on the base of the antenna.

Place the 2 U-bolt ends with the J-Mount (not included) inside, through the U-Bolt base and then through the L-Bracket.

Attach the 3 lock washers to the ends of the U-Bolts on the back of the L-Bracket and tighten with the provided Hex nuts.

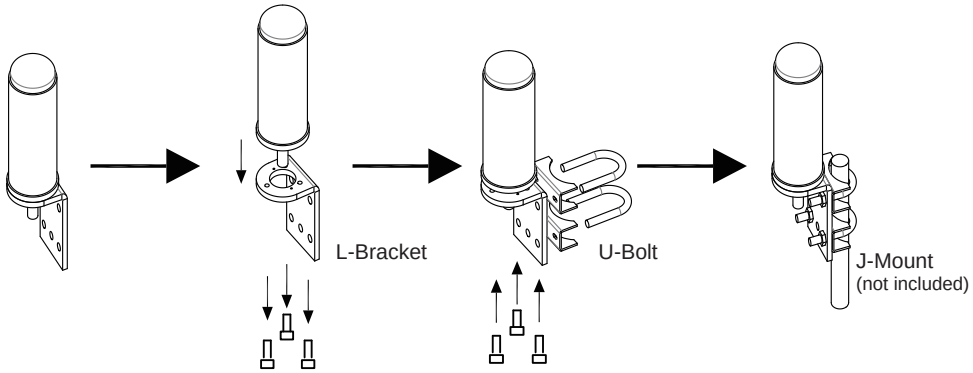

Specifications

Frequency	698-960 / 1700-2700 MHz
Input Impedance	50 Ohm
Antenna Gain	2-3 dBi / 3-4 dBi
VSWR	≤1.8
Power Rating	10 W
Polarization Type	Vertical
Radiation	Omni-directional
Maximum Power	100 Watt
Connector type	N-Female
Dimension	9.5” x 3.9”
Color	White
Mount	Mounts on the roof or wall
Operating Temperature	-22°F to +176°
Beamwidth Groundplane	E:72 H:92/ E:50 H:80
Material	Fiberglass

SureCall | 48346 Milmont Drive, Fremont CA 94538 | 1-888-365-6283 | sales@surecall.com

COAXIAL RF SURGE PROTECTION

GT Series

The GT (Gas Tube) Series of RF DC pass broadband surge arrestors are value-priced and applicable to many general applications. Products offer excellent VSWR and superior RF performance for equipment operating between DC and 7GHz. They are available in a variety of connector options, for 50Ω and 75Ω RF networks. Replaceable gas-tube options are also available.

FEATURES

- Frequency ranges from DC to 7 GHz
- 7/16" DIN, N-Type, F-Type, TNC, and SMA
- Repeatable RF performance after surge
- 75 Ohm version available
- Weatherproof when installed

STANDARDS

- Weatherproof : IEC 60529 IP 67
- Bellcore TA-NWT-000487
- Procedure 4.11, Wind Driven (120 MPH)
- CE & RoHS Compliant

GENERAL SPECIFICATIONS*

Insertion Loss	Typically 0.1 dB
VSWR	Typically 1.1:1
Return Loss	Typically <26 dB
Typical Surge	20 kA 8/20µs Waveform

*Confirm with product specific datasheet for detailed specifications

POLYPHASER'S LIGHTNING ARRESTOR TECHNOLOGY

The GT product family is based upon PolyPhaser's market establishing gas tube surge protection technology. This field-tested product family is used all over the world and covers many general applications, such as land mobile radio, WiFi and GPS.

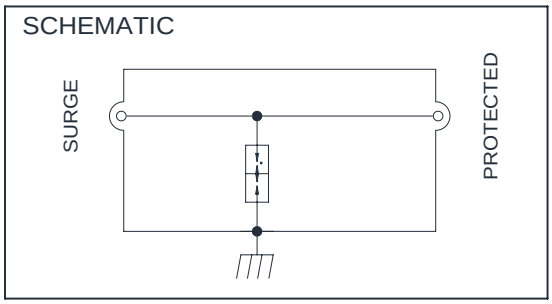

DIMENSIONS

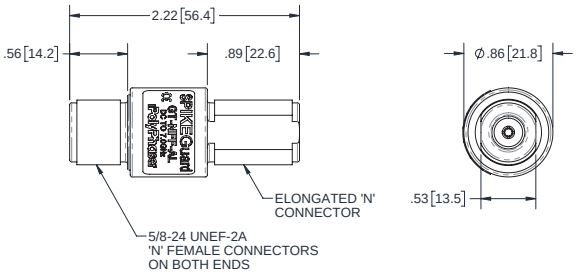

P/N: GT-NFF-AL

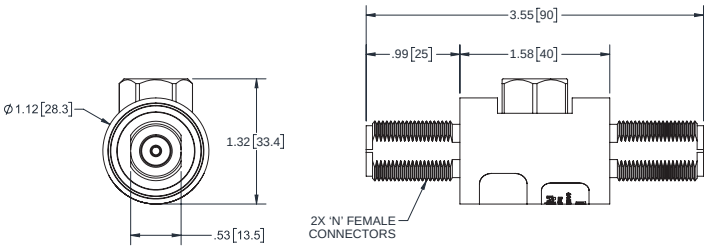

P/N: RGT

1464-051 RevA

© PolyPhaser, 2017, All rights reserved

AVAILABLE PART NUMBERS

Standard Gas Tub Arrestors – 50Ω

Part Number	Frequency Rage	Connector	Max Operating Current	RF Power (RMS)
DT-NFF	DC - 3 GHz	N-Type	10A	40W
DT-NFM	DC - 3 GHz	N-Type	10A	40W
GTH-NFF-AL	DC - 7 GHz	N-Type	10A	1kW
GTH-NFM-AL	DC - 7 GHz	N-Type	10A	1kW
GT-NFF-AL	DC - 7 GHz	N-Type	10A	90W
GT-NFM-AL	DC - 7 GHz	N-Type	10A	90W
GT-NFSF-AL	DC - 7 GHz	N-Type to SMA	10A	90W
GT-TFF-AL	DC - 7 GHz	TNC	10A	90W
GT-TFM-AL	DC - 7 GHz	TNC	10A	90W

Standard Gas Tub Arrestors – 75Ω

Part Number	Frequency Rage	Connector	Max Operating Current	Avg. CW RF Power @ 100MHz
GT75-FFF (75Ω)	DC - 2.5 GHz	F-Type	6A	50W

Replaceable Gas Tub Arrestors – 50Ω

Part Number	Frequency Rage	Connector	Max Operating Current	Avg. CW RF Power @ 100MHz
RGT	DC - 2.4 GHz	N-Type	10A	50W
RGT-ME	DC - 2.4 GHz	N-Type	10A	50W
RGT-DFF	DC - 2.7 GHz	7/16" DIN	10A	Max 400W
RGT-DFM	DC - 2.7 GHz	7/16" DIN	10A	Max 400W
RGT-KIT-GASTUBE	Replaceable Gas Tube Kit			

Installation Manual

APEX Series

Silicon and MOV Panel Protection

APEX Series

TRANSTECTOR

Table of Contents

Mechanical Installation	3
Table One - Application Rating	3
Figure 1 - Mounting Details	4
Electrical Installation	5
Figure 2 - 120T Configuration	5
Figure 3 - 120S Configuration	5
Figure 4 - 240S Configuration	6
Figure 5 - 120W, 240W Configuration	6
Figure 6 - 240D Configuration	6
Figure 7 - Card Installation	9

WARNING: AC Power to the surge suppressor, at the surge suppressor, and in the vicinity of the surge suppressor MUST be disconnected prior to performing the following mechanical and electrical installation procedure.

WARNING: Wiring conductors utilized to attach Phases L1, L2, L3, the Neutral and Safety Ground from the AC power source to the APEX Series should be color-coded to conform with appropriate electrical codes and/or accepted wiring practices. It is very important to make no assumptions that wiring colors on existing electrical installations correspond to proper phase, neutral, or ground connections.

WARNING: The disconnect utilized in the current path from the electrical distribution and the APEX Series must be coordinated to operate properly in conjunction with all other disconnects contained within the same electrical distribution.

WARNING: Proper electrical connections must be accomplished in accordance with applicable International, National, and/or Local electrical code requirements.

©2009 Transtector Systems, Inc. All rights reserved.

APEX Series Installation

The APEX Series surge suppressor models are designed specifically to operate on the following configurations:

Configurations	
120V 1Ø	240V 3Ø Delta
120/240 Split 1Ø	220/380 3Ø Wye
120/208 3Ø Wye	230/400 3Ø Wye
240V 1Ø	240/415 3Ø Wye

Suppression is accomplished in parallel between phase conductors and/or between phase and the neutral conductors, depending upon the voltage configuration. Once activated, the suppressor remains operative until excess transient energy is dissipated and instantaneous peak line voltage falls below the approximate 120% overvoltage threshold. At that time the suppressor automatically deactivates, resets to a “ready” state, and awaits further transient activity.

Please take a moment to read and understand the installation instructions included with this product. If any questions should arise concerning the proper installation of this product, please contact us.

Mechanical Installation

Step 1:

Select a location along the electrical distribution system as physically close to critical equipment loads as practical to install the surge suppressor. The suppressor can be installed at distribution panels, at equipment AC power inputs, or at the secondary windings of isolation transformers. The suppressor must be positioned within four (4) feet (122 cm) of the AC power source. It is recommended that the suppressor be installed within two (2) feet (61 cm) of the AC power source, if possible.

CAUTION: Increasing electrical impedance values to the inputs of any transient suppressor, regardless of manufacturer, can increase the device’s voltage limiting levels. Suppressors should be installed as physically close to the protected electrical distribution panel or critical load as possible using the largest size wiring/conductors as practical.

Step 2:

Verify that the maximum current rating of the electrical service to be protected does not exceed specified amperage rating of the suppressor model to be installed.

Table One: Application Rating	
APEX II	225 Amps and below
APEX III	400 Amps and below
APEX IV	1000 Amps and below

CAUTION: Transtector's Applications Engineering Department must be contacted prior to installing the APEX Series suppressor when the maximum current rating of the electrical service to be protected exceeds the specified amperage rating of the surge suppressor.

Step 3:

Unpack the surge suppressor from its shipping container and visually inspect for shipping related damage. Open the suppressor door and verify that all components, lights, displays, and electrical connections are secure.

Step 4:

Refer to the APEX Series enclosure diagram (Figure 1). Note the suggested locations on either the bottom or the left side of the suppressor enclosure to drill holes to route conduit from the AC power source to the suppressor assembly. Apertures intended to provide a path for AC wiring conductors can be bored anywhere into the suppressor enclosure as long as suppression components are not damaged or obstructed in the process.

Step 5:

Refer to the mounting illustration (Figure 1) for the APEX Series suppressor. Drill four (4) mounting holes anyplace on the mounting surface. Insure mounting holes are spaced 8" (20.38 cm) apart from each other horizontally and are separated 13" (33 cm) vertically.

Step 6:

Physically position the surge suppressor as close as possible to the AC power source and securely mount it to any surface capable of permanently supporting 20 pounds (9.1 Kg) of weight. (Mounting hardware is not included).

WARNING: Serious and/or fatal electrical shock hazards exist if extreme care is not exercised during all phases of mechanical and electrical installation procedures.

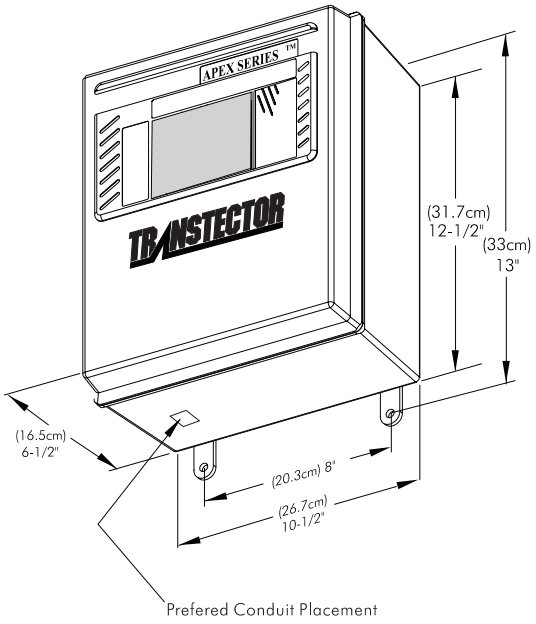

Figure 1 - Mounting Details

©2009 Transtector Systems, Inc. All rights reserved.

Electrical Installation

NOTE: These instructions are intended to guide the equipment installer through a step-by-step procedure resulting with the surge suppressor being electrically connected in parallel with its AC power source.

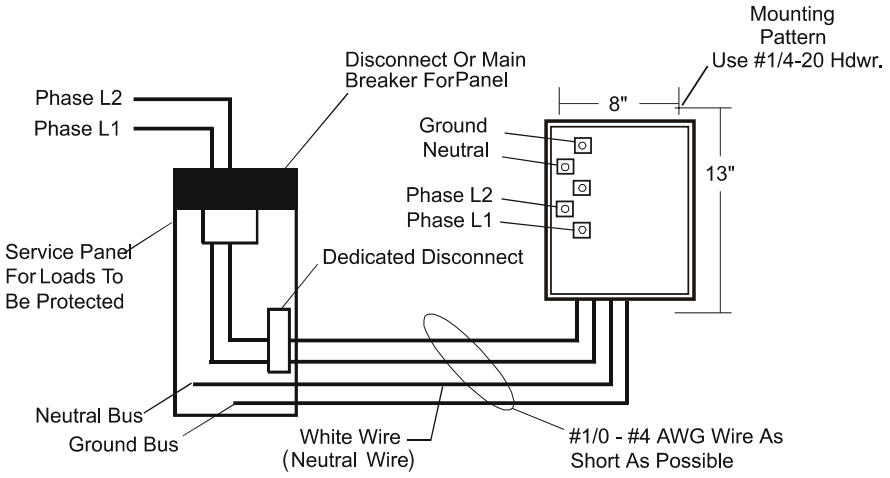

Figure 2 - 120T configuration - typical installation consists of two phase conductors with one neutral

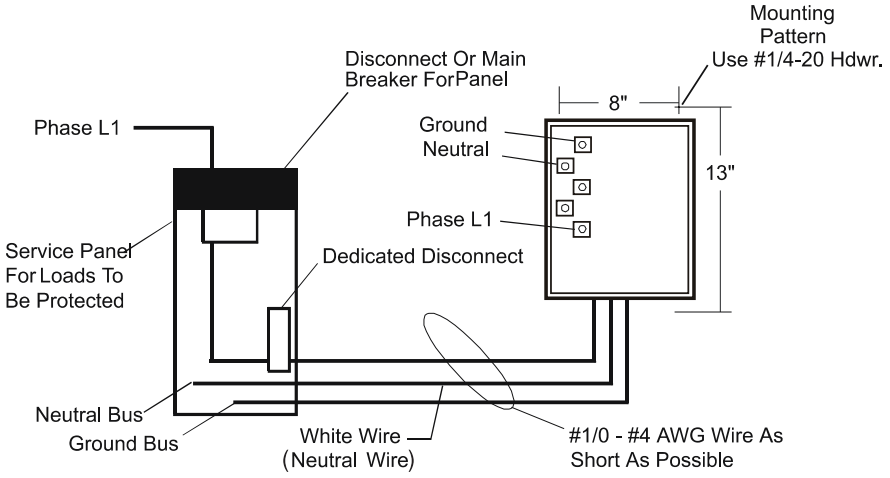

Figure 3 - 120S configuration - typical Installation consists of one phase conductor with one neutral

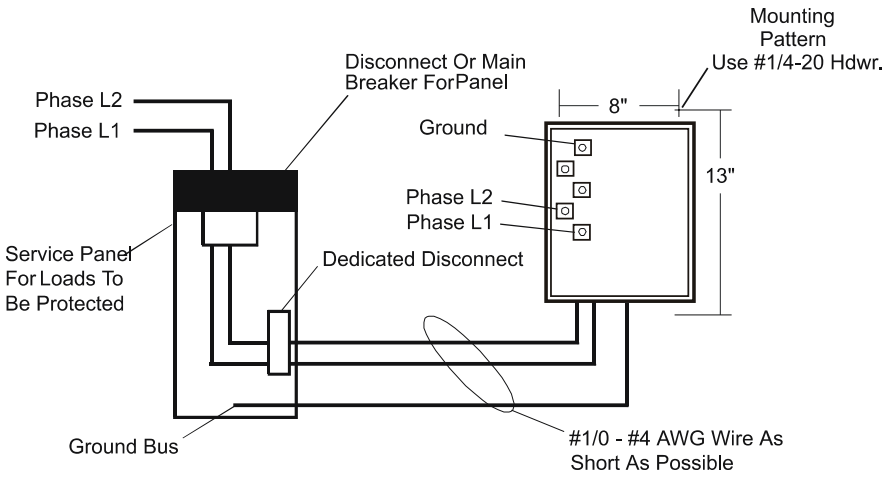

Figure 4 - 240S configuration - typical Installation consists of two phase conductors with no neutral
NOTE: Phase L, or Phase L2 can be substituted for neutral in international applications.

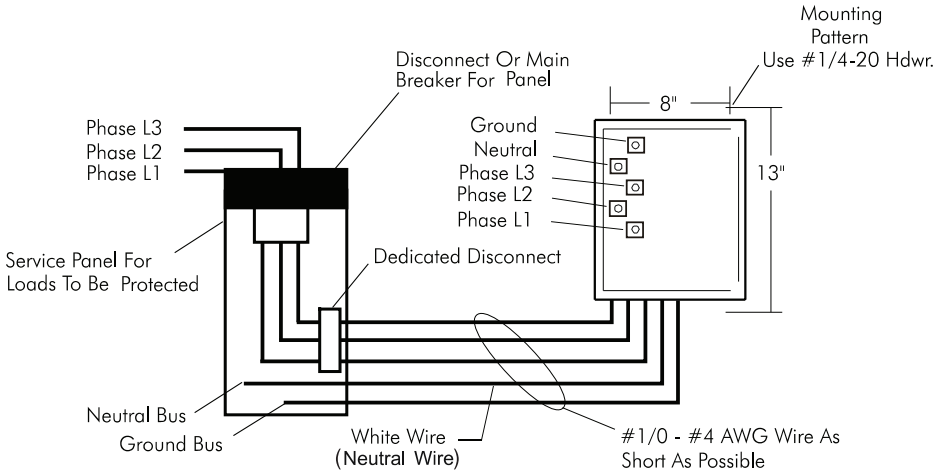

Figure 5 - 120W, 240W configuration - international installation consists of voltages ranging from 380 to 415 between phase conductors; and ranging from 220 to 240 between phase conductors and neutral

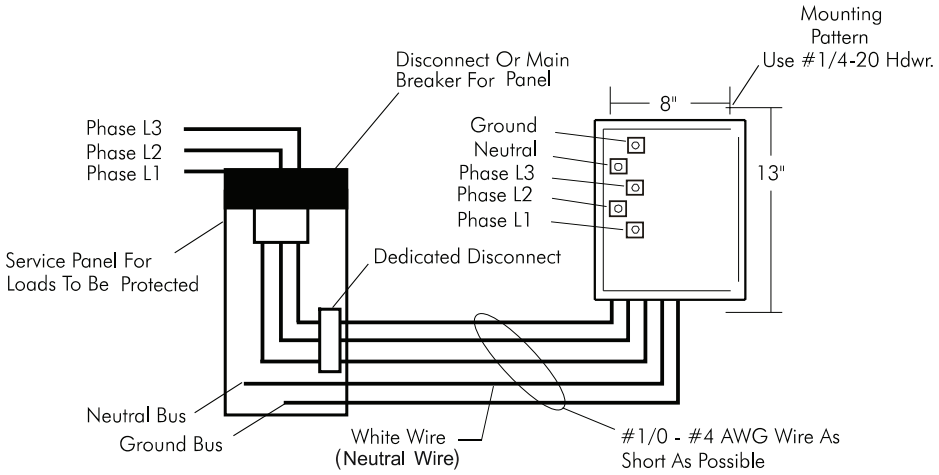

Figure 6 - 240D configuration - typical installation

©2009 Transtector Systems, Inc. All rights reserved.
www.transtector.com | ISO 9001: 2000 & 14001 certified company

WARNING: All international, national, local, and other applicable electrical codes must be followed and adhered to during all phases of the electrical installation. If any of the following electrical installation procedures conflict with applicable electrical codes, the suppressor installation must be discontinued and Transtector System's Applications Engineering department must be contacted for further instructions.

Step 1:

Ensure that the electrical installation is accomplished by qualified personnel that are certified and/or licensed to service and install equipment upon the appropriate electrical services.

Step 2:

Verify at the AC power source, at the point where the surge suppressor will be electrically attached, that the surge suppressor is designed to protect upon that specificed voltage configuration.

Step 3:

Verify that the maximum current rating of the electrical service to be protected does not exceed the specified amperage of the surge suppressor.

Step 4:

Measure AC voltages between phase(s) and neutral and/or between phases as appropriate using an AC voltmeter. Verify that the measured RMS voltages between the fore mentioned conductors complies to the nominal values appropriate for the electrical distribution.

WARNING: AC Power to the surge suppressor, at the surge suppressor, and in the vicinity of the surge suppressor MUST be disconnected prior to performing the following mechanical and electrical installation procedure.

Step 5:

Disconnect power at the AC power source at the point where the APEX Series will be connected. Verify that AC power is disabled.

NOTE: The mechanical and electrical installation illustrations are referenced in Figures 1 through 6 and are applicable with the remaining electrical installation procedural steps.

WARNING: Wiring conductors utilized to attach Phases L1, L2, L3, the Neutral and Safety Ground from the AC power source to the APEX Series should be color-coded to conform with appropriate electrical codes and/or accepted wiring practices. It is very important to make no assumptions that wiring colors on existing electrical installations correspond to proper phase, neutral, or ground connections.

Identify and verify each specific phase, neutral, and ground references at the AC power source prior to proceeding with these electrical installation procedures.

WARNING: The disconnect utilized in the current path from the electrical distribution and the APEX Series must be coordinated to operate properly in conjunction with all other disconnects contained within the same electrical distribution.

WARNING: Proper electrical connections must be accomplished in accordance with applicable International, National, and/or Local electrical code requirements.

Step 6:

Tap into the three (3) phase conductors via an approved disconnect, i.e. circuit breaker that is sized appropriately (typically 60 Amps) on the load side of the main circuit breaker of the AC power service requiring surge suppression. If neutral is required for the system, tap into the neutral/bus wire. These

wiring conductors must be sized accordingly dependent upon the following parameters:

If the APEX Series suppressor is positioned within two (2) feet (61 cm.) from the AC power source, then a minimum of #6 (4.1 mm.) sized wiring conductors are recommended.

If the APEX Series suppressor is positioned within four (4) feet (122 cm.) from the AC power source, then a minimum of #4 (5.2 mm.) sized wiring conductors are recommended.

CAUTION: Contact Transtector's Application Engineering Department before proceeding with the installation if the suppressor cannot be installed within four (4) feet of the AC power source requiring protection from transient overvoltages.

Step 7:

If a breaker cannot be supplied in the protected panelboard, install either three (3) external fuses or an external three pole thermal/magnetic circuit breaker to be used as a disconnect in series with the surge suppressor and the AC power source. Fuses should be rated at ten (10) AMPs less than the service disconnect to a maximum of 100 AMPS (Typically BUSSMAN LPN Series fuse). A 60 AMP circuit breaker can be used in conjunction with #6 AWG. (4.1 mm.) sized wire if the surge suppressor is installed within two (2) feet (61 cm.) of the AC power source. Ensure that the disconnect is installed initially in its "OPEN" state so that AC power cannot pass through it until it is reset.

CAUTION: The disconnect addressed in the above procedural step serves a dual purpose. It provides a means for maintenance personnel to de-energize AC power supplied to the APEX Series suppressor to allow for servicing the device. It also allows the suppressor to be electrically removed from the AC power source in the event of catastrophic failure modes without disrupting AC power to critical loads. Its current rating must be rated lower than that of the main disconnect supplying power to the protected electrical loads.

Step 8:

Route wiring conductors through metal conduit from the disconnect installed in the previous step at the AC power source to the suppressor enclosure. Mate the conduit to the suppressor enclosure at the hole bored in Step 4 of the Mechanical Installation procedures on page 3. Ensure that the conduit is properly grounded at the AC power source.

WARNING: Adequate and proper grounding practices must be heeded to insure that human safety is accomplished during electrical fault conditions.

Step 9:

Open the front door of the suppressor enclosure and insure that conduit and/or external grounding conductors are securely fastened to Ground lug designated with the letter G on the terminal block at the left side of the backpanel assembly where the three suppressor modules attach. Locate the labeled terminal block providing the means to attach the electrical wiring conductors from the AC power source the APEX Series suppressor. The designated labels on the terminal block correspond to specific Phase and/or Neutral conductors from the AC power wiring positions on the terminal block.

WARNING: In Wye configurations verify that the neutral conductor from the AC power source is connected properly to the "N" designated position on the terminal block identified in Step 9. If any phase conductor should accidentally be connected to that "N" designated connection point severe suppressor damage will result and human safety will be compromised as AC power is applied to the APEX Series suppressor.

Step 10:

After electrical wiring hook-up is complete and prior to energizing electrical power, each suppressor card must be firmly inserted into it's respective backpanel slot. Refer to the installation instruction sheet

©2009 Transtector Systems, Inc. All rights reserved.

located inside of the enclosure door and note the phase labeling on each card.

Proper slot placement will align the cards with lable on the outside of the door. Cards must be inserted into their respective slots, with the card fingers engaging the electrical stab-down contacts, and pressed completely into place. Figure 7 depicts the card finger alignment into the slots. Press adjacent cards together sideways to snap the interlock pins on the top and bottom for added stability.

WARNING: the card interlock pins must be separated before removing individual cards for services.

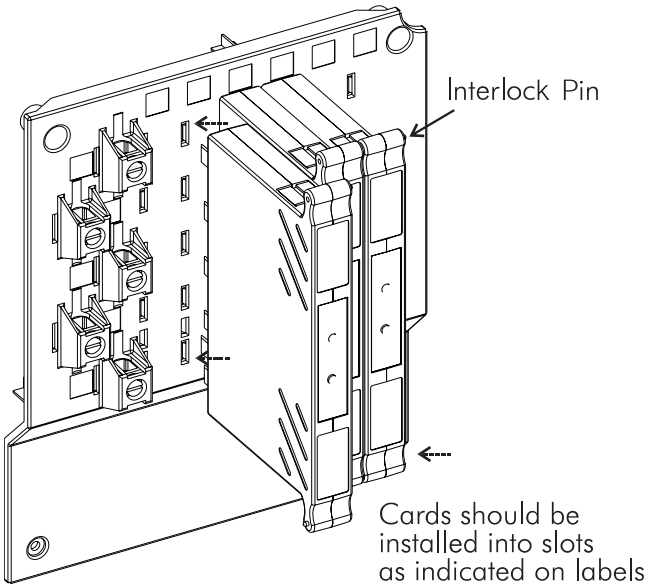

Figure 7 - card installation

NOTE: Depending on the configuration of your Apex Series suppressor, this unit could have between 1 and 6 cards to install.

■ Surge Protection
For Business-Critical Continuity™

Edco PC642 Series

Zone/Loop/Data

Edco PC642 Series Surge Suppressor

The Edco PC642 Series surge suppressor is a two-pair pair (four wire) module implementing three-stage hybrid technology. This module addresses over-voltage transients with gas tubes and silicon avalanche components. In addition, sneak and fault currents are mitigated with resettable fuses (PTCs). The PTCs increase resistance several orders of magnitude when over-currents exceed safe levels. A normal state resumes when over-currents are removed. The ability to self-restore in this manner significantly increases suppressor performance and survivability.

The Edco PC642 card edge module is gold-plated, double sided and is designed to mate with the the Edco PCB1B gold-plated female terminal connector (sold separately). When snapped together, the data circuits "pass thru" the protector in a serial fashion from the four "Field Side" terminals to the four "Electronics Side" terminals. Terminals 1 or 10 of the PCB1B must be attached to Building-Approved Ground per Edco Technical Bulletin # 2015.

EDCO PCB1B BASE SOLD SEPARATELY

Features

UL® 497B

- Three-stage hybrid protection
- Sneak/fault current protection
- Resettable fuses – PTCs
- Low capacitance option
- Plug-in module
- Requires Edco PCB1B base
- Fast response time
- UL listed 497B
- PC642PTU (Pass Thru Unit) available for troubleshooting
- 5 year warranty

General Technical Specifications

Operating Voltage	5, 12, 18, 24, 30, 36, 43, 52, 180 VDC
Clamping Voltage	8, 15, 20, 30, 36, 43, 50, 60, 200 VDC
Operating Current	0.15 A
Peak Surge Current	10 kA (8 x 20 µs)
Frequency Range	0 to 20 MHz
Insertion Loss	< 0.1 dB at 20 MHz
SPD Technology	GDT, SAD, w/Series PTC
Connection Type	Terminal block w/compression lugs Terminals accept up to 10 AWG
Operating Temperature	-40°C to +85°C
Dimensions (Inches)	2H x 1W x 2.5L (PC642 + PCB1B Base)
Weight	1 oz
Certifications	UL 497B, ISO 9001:2000

Caution: *The hybrid design of this product includes series resistance. Do not place this product in service on any signal line capable of supplying more than 150 milliamperes continuously.*

EMERSON™
Network Power

Installation Instructions

Terminal Assignments

PCB1B:

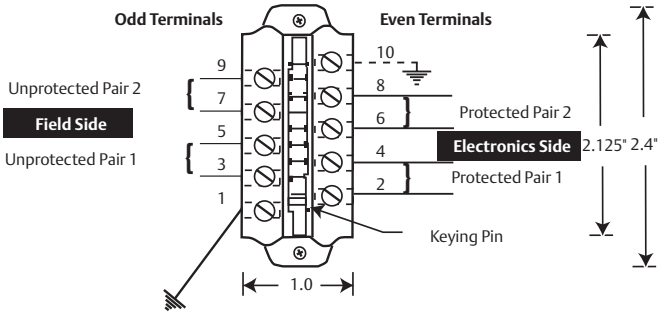

Ground Terminal 1 or 10 to Building Approved Ground.

DO NOT daisy chain grounds. NOT intended for shield termination.
Install ground in accordance with all applicable codes.

Read and Understand These Instructions:
These protectors are intended for indoor use on communication loop circuits which have been isolated from the Public Switch Telephone Network.

The communication loop circuits shall not be exposed to accidental contact with the electric light or power conductors. The protectors shall be installed per the applicable requirements of the National Electric Code, ANSI/NFPA 70.

Ordering Information

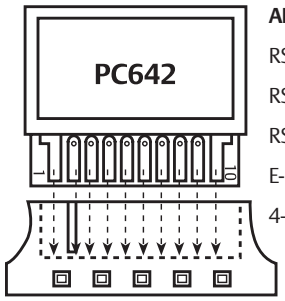

PCB1B

APPLICATION:	
RS485, RS422:	PC642C-008LC & PCB1B
RS423, Token Ring:	PC642C-008LC & PCB1B
RS232:	PC642C-020 & PCB1B
E-NET, 10 BASE T:	PC642C-030LC & PCB1B
4–20ma:	PC642C-036 & PCB1B

How to Specify the Appropriate Model

PC642C - [ ][ ][ ][ ]

VOLTAGE CLAMP

8 Volts	0	0	8
15 Volts	0	1	5
20 Volts	0	2	0
30 Volts	0	3	0
36 Volts	0	3	6
43 Volts	0	4	3
50 Volts	0	5	0
60 Volts	0	6	0
*200 Volts	2	0	0

•Not UL Listed

	no suffix stage 2 clamp each line-to-ground
D	stage 2 clamp line-to-line only
X	stage 2 clamp line-to-line and each line to ground
LC	low capacitance option stage 2 clamp line-to-line and each line to ground

Emerson Network Power.
The global leader in enabling Business-Critical Continuity™.

- AC Power
- Connectivity
- DC Power
- Embedded Computing
- Embedded Power
- Monitoring
- Outside Plant
- Power Switching & Control
- Precision Cooling
- Racks and Integrated Cabinets
- Services
- **Surge Protection**

EMERSON™
Network Power

IO-50105 3/07 Rev. 0 Printed in USA

Business-Critical Continuity, Emerson Network Power and the Emerson Network Power logo are trademarks and service marks of Emerson Electric Co. ©2007 Emerson Electric Co.

Single Phase Three Wire—120/240 Vac—UL Listed
Main Circuit Breaker (Order QO, QOT, QO-EPD, QO-GFI, QO-AFI and QO-PL branch circuit breakers from pages 6-10 and 6-11.)

	Mains Rating (A)	Spaces	▲Max. Number Single Pole Circuits	Max. Number of Tandem Circuit Breakers	Total Price (Interior, Box & Cover)	Load Center Box and Interior		Indoor Cover with Door (Order Separately)			Main Wire Size AWG/kcmil Al or Cu	Equipment Ground Bar Kit (Order Separately)		Box No. See Page 1-12
						Catalog Number	Price	Flush Catalog No.	Surface Catalog No.	Price		Catalog No.	Price	
INDOOR	**Convertible Mains —Factory-installed Main Circuit Breaker—22,000 RMS Sym. Amperes Short Circuit Current Rating —Convertible to Main Lugs (see below) or Lower Amperage Main Circuit Breaker (See page 1-2) ■**													
	QOM1 Main Circuit Breaker Frame Size—Copper Bus													
	100	12	12	0	**$ 226.10**	QO112M100	**$ 201.**	QOC12UF	QOC12US	**$ 25.10**	#6–1	PK9GTA	**$ 8.90**	5
		16	16	0	**253.10**	QO116M100	**228.**	QOC20U100F	QOC20U100S	**25.10**		PK12GTA	**10.50**	6
		20	20	0	**289.10**	QO120M100	**264.**	QOC20U100F	QOC20U100S	**25.10**		PK15GTA	**11.40**	6
		24	24	0	**369.10**	QO124M100	**344.**	QOC24UF	QOC24US	**25.10**	#6–2/0	PK15GTA	**11.40**	7
		32	32	0	**484.10**	QO132M100	**459.**	QOC32UF	Use Flush	**25.10**		PK18GTA	**12.50**	8
	125	24	24	0	**546.10**	QO124M125	**521.**	QOC24UF	QOC24US	**25.10**	#6–2/0	PK15GTA	**11.40**	7
		32	32	0	**694.40**	QO132M125	**668.**	QOC32UF	Use Flush	**26.40**		PK18GTA	**12.50**	8
	Convertible Mains —Factory-installed Main Circuit Breaker—22,000 RMS Sym. Amperes Short Circuit Current Rating —Convertible to Main Lugs (see below) or Lower Amperage Main Circuit Breaker (See page 1-2)■													
	QOM2 Main Circuit Breaker Frame Size—Copper Bus													
	150	20	30	10	**$ 547.00**	QO12030M150	**$ 489.**	QOC30UF	QOC30US	**$ 58.00**	#4–250	PK18GTA	**$12.50**	9
		24	24	0	**566.00**	QO124M150	**508.**	QOC30UF	QOC30US	**58.00**		PK15GTA	**11.40**	9
		30	30	0	**569.00**	QO130M150	**511.**	QOC30UF	QOC30US	**58.00**		PK18GTA	**12.50**	9
		32	32	0	**646.00**	QO132M150	**588.**	QOC40UF	QOC40US	**58.00**		PK18GTA	**12.50**	10
	200	20	40	20	**547.00**	QO12040M200	**489.**	QOC30UF	QOC30US	**58.00**	#4–250	PK23GTA	**14.20**	9
		24	24	0	**577.00**	QO124M200	**519.**	QOC30UF	QOC30US	**58.00**		PK15GTA	**11.40**	9
		30	30	0	**586.00**	QO130M200	**528.**	QOC30UF	QOC30US	**58.00**		PK18GTA	**12.50**	9
		30	40	10	**638.00**	QO13040M200	**580.**	QOC30UF	QOC30US	**58.00**		PK23GTA	**14.20**	9
		40	40	0	**747.00**	QO140M200	**689.**	QOC40UF	QOC40US	**58.00**		PK23GTA	**14.20**	10
		42	42	0	**813.00**	QO142M200	**739.**	QOC42UF	QOC42US	**74.00**	#4–300	PK23GTA	**14.20**	11
	225	40	40	0	**797.00**	QO140M225	**723.**	QOC42UF	QOC42US	**74.00**		PK23GTA	**14.20**	11
		42	42	0	**835.00**	QO142M225	**761.**	QOC42UF	QOC42US	**74.00**		PK23GTA	**14.20**	11
	Fixed Mains—Factory-installed LAL Main Circuit Breaker—42,000 Fully Rated RMS Sym. Amperes Maximum Short Circuit Current Rating ♦													
	300	42	42	0	**$4686.00**	QON42MS300 (int)★ MH68 (box)	**$4107. 75.‡**	MHC68VF	MHC68VS	**$504.‡**	(1) #4–500 or (2) #4–3/0	PK27GTA▼ or PK15GTA6	**$22.50**	16
	400	42	42	0	**4686.00**	QON42MS400 (int)★ MH68 (box)	**4107. 75.‡**	MHC68VF	MHC68VS	**504.‡**	(1) #4–600 or (2) #4–250		**35.50**	16

Above listings thru 200 A mains rating meet Federal Specification W-P-115c as Type 1, Class 2.
▲ Maximum number of single pole branch circuits utilizing QO and/or QOT circuit breakers.
■ 22,000 AIR main circuit breaker UL Listed for use ahead of QO, QOT and QO-PL 10,000 AIR branch circuit breakers to permit their application on systems with up to 22,000 amperes available fault current.
♦ UL short circuit current rating depends on lowest interrupting rating of circuit breakers installed. Also, UL Listed 5000 A short circuit current for corner grounded Delta systems. Use QO-H circuit breakers only.
★ Interior only, order box separately.
▼ PK27GTA includes a #6–2/0 Al/Cu lug.

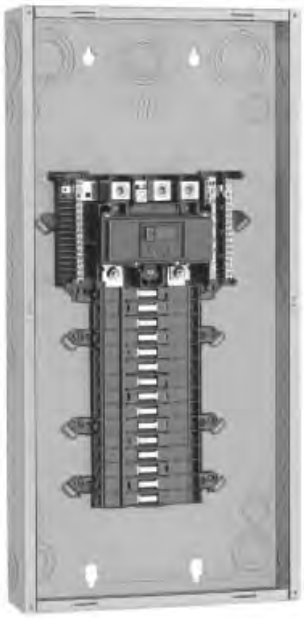

QO130M150

Main Lug Kits

QOL125

QOL225

Field-installable Main Lugs (Convertible Load Centers Only)

Main Lug △ Ampere Rating	Use On Convertible Load Center With Mains Rating	Catalog Number	Price	Lug Wire Size □ AWG/kcmil Al or Cu
125	100–125	QOL125◊	**$29.40**	#6–2/0
225	150–225	QOL225◊	**69.00**	#6–300

△ Do not exceed the load center mains rating.
□ Wire range listed for QOL lug kits is the wire range of that lug. To find out maximum wire size permitted in a particular load center per UL, see pages 1-2 thru 1-7 under main wire size.
◊ If main circuit breaker knockout has been removed from the load center's trim, order appropriate filler plate from page 1-9.

For additional information, reference Catalog #1100CT9901.

© 2003 Schneider Electric
All Rights Reserved
9/8/03

DE3A		‡PE1A	

Discount Schedule

REV	DESCRIPTION	BY	DATE	–	----	--	--/--/--
–	----	--	--/--/--	–	----	--	--/--/--

CKT NO	ACCESSORIES	TYPE	RATING AMP/P	RATING AMP/P	TYPE	ACCESSORIES	CKT NO
1		QOB	30/2	30/2	QOB		2
3							4
5		QOB	20/2	20/2	QOB		6
7							8
9		QOB	15/2	15/2	QOB		10
11							12
13		QOB	15/2	15/2	QOB		14
15							16
17		QOB	20/1	15/1	QOB		18
19		QOB	15/1	15/1	QOB		20
21		QOB	15/1	15/1	QOB		22
23		QOB	15/1				24
25							26
27							28
29							30
31							32
33							34
35							36
37							38
39							40
41	BLANK					BLANK	42

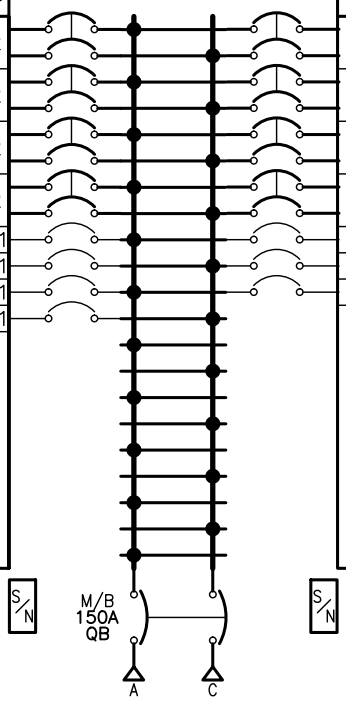

PHYSICAL DATA

ENCLOSURE Type 1
Surface – Hinged
FRONT CAT#: NC50SHR
BOX CAT#: MH50
DIMENSIONS:
50''H x 20''W x 5.75''D
WIRE BENDING SPACE:
TOP – 5
BOTTOM – 9.26
SIDE – 6.13
PBA: 707HR

BUSSING: Aluminum
Tin Plated

OPTIONAL FEATURES:
BRANCH USER PLACEMENT
ALUMINUM SOLID NEUTRAL
ALUMINUM GROUND BAR

ELECTRICAL DATA

SYSTEM: 120/240V 1Ph 3W 60Hz
System Ampacity: 150A
10kA SYMS. SCCR

MAIN: MAIN BREAKER QB 150A
Bottom FEED
10kA AIR
INCOMING CONDUCTORS(S) PER NEC:
#4 – 300 kcmil

BRANCH MOUNTING TYPE: BOLT–ON

----------BRANCH SUMMATION----------

2 – 30A/2P QOB	2 – 20A/2P QOB
4 – 15A/2P QOB	1 – 20A/1P QOB
6 – 15A/1P QOB	

JOB NAME:	H2K TECH	EQUIPMENT DESIGNATION:	
JOB LOCATION:	HUTCHINSON MN	EQUIPMENT TYPE:	NQ (Circuit Breaker Type) PANEL 1 OF 1
DRAWN BY:	(Q2C)	DRAWING TYPE:	ONE LINE DIAGRAM
ENGR:		square D by Schneider Electric	
DATE:	May 13 2014		
DRAWING STATUS:	QUOTE	DWG# 034958967–01	PG 1 OF 1 REV –

Table 9.20: QOB-GFI, QOB-EPD, and QOB-EPE Circuit Breakers

Ampere Rating ▲	One-pole		Two-pole—Common Trip		Three-pole—Common Trip			
	Catalog No.	$ Price	Catalog No.	$ Price	Catalog No.	$ Price	Catalog No.	$ Price
QOB-GFI—QOB Qwik-Gard™ Circuit Breaker With Ground Fault Circuit Interrupter—UL Class A 4–6 mA People Protection. ■								
	120 Vac—10 k AIR		120/240 Vac—10 k AIR		208Y/120 Vac—10 k AIR			
15 A	QOB115GFI	248.	QOB215GFI	444.	QOB315GFI	791.		
20 A	QOB120GFI	248.	QOB220GFI	444.	QOB320GFI	791.		
25 A	QOB125GFI	248.	QOB225GFI	444.	—	—		
30 A	QOB130GFI	248.	QOB230GFI	444.	QOB330GFI	791.		
40 A	—	—	QOB240GFI	444.	QOB340GFI	791.		
50 A	—	—	QOB250GFI	444.	QOB350GFI	791.		
60 A	—	—	QOB260GFI ♦	444.	—	—		
QOB-VHGFI ★								
	120 Vac—22 k AIR							
15 A	QOB115VHGFI	497.						
20 A	QOB120VHGFI	497.						
25 A	QOB125VHGFI	497.						
30 A	QOB130VHGFI	497.						
QOB-EPD—QOB Equipment protection circuit breakers with UL Listed 30 mA (EPD) or 100 mA (EPE) equipment protection.								
	120 Vac—10 k AIR		120/240 Vac—10 k AIR		240 Vac—10 k AIR			
15 A	QOB115EPD	417.	QOB215EPD	671.	QOB315EPD ♦	1077.	QOB315EPE ♦	1077.
20 A	QOB120EPD	417.	QOB220EPD	671.	QOB320EPD ♦	1077.	QOB320EPE	1077.
25 A	QOB125EPD	417.	QOB225EPD	671.	—	—	—	—
30 A	QOB130EPD	417.	QOB230EPD	671.	QOB330EPD ♦	1077.	QOB330EPE ♦	1077.
40 A	—	—	QOB240EPD	671.	QOB340EPD ♦	1077.	QOB340EPE ♦	1077.
50 A	—	—	QOB250EPD	671.	QOB350EPD ♦	1077.	QOB350EPE ♦	1077.
60 A	—	—	QOB260EPD	671.	—	—	—	—
QOB-VHEPD								
	120 Vac—22 k AIR							
15 A	QOB115VHEPD	772.						
20 A	QOB120VHEPD	772.						
25 A	QOB125VHEPD	772.						
30 A	QOB130VHEPD	772.						
QOB-HM—High magnetic trip circuit breakers								
15 A	QOB115HM▼	39.80						
20 A	QOB120HM▼							
QOB-K—Key operated QOB circuit breakers △								
	120 Vac—10 k AIR							
10 A	QOB110K	168.						
15 A	QOB115K	168.						
20 A	QOB120K	168.						
25 A	QOB125K	168.						
30 A	QOB130K	168.						

(Footnotes for Tables 9.20, 9.21, and 9.22)

- ▲ 10–30 A circuit breakers are suitable for use with 60 °C or 75 °C conductors. 35–60 A circuit breakers are suitable for use with 75 °C conductors.
- ■ Do not connect to more than 250 feet of load conductor for the total one-way run to prevent nuisance tripping.
- ♦ Suitable only for feeding 240 Vac and 208 Vac two-wire loads. Does not contain load neutral connection.
- ★ Recommended for applications where high initial inrush may occur and for individual dimmer applications.
- ▼ UL Listed as SWD (switching duty) rated suitable for switching 120 Vac fluorescent lighting loads.
- △ Available in single pole construction and can be mounted in any single pole space which will accept a standard QOB. These circuit breakers can be turned ON or OFF or RESET with a special key (Catalog No. QOK10) included with the circuit breaker. These circuit breakers are UL Listed and available as shown in the table.
- □ UL Listed for use on circuit feeding fluorescent and High Intensity Discharge (HID) lighting systems such as mercury vapor, metal halide, or high pressure sodium. These circuit breakers are physically interchangeable with QOB circuit breakers.
- ◊ UL Listed 5,000 AIR on 3Ø corner grounded delta systems.
- ☆ UL Listed as HACR type for use with air conditioning, heating, and refrigeration equipment having motor group combinations and marked for use with HACR type circuit breakers.
- ▽ DC Rating is not available on indicated products.
- ◒ QOB2150VH uses 4 pole spaces. QOB3110VH, QOB3125VH, and QOB3150VH each use 6 pole spaces. 40A maximum circuit breaker mounted opposite. Use with 75 °C wire only.
- ∗ For QO plug-on circuit breaker pricing, see the tables starting on Digest page 1–2.
- ♦ See note in Instruction Bulletin when using in an enclosure with a QO403 or QON prefix.

Table 9.21: Standard Interrupting QOB 10,000 AIR Circuit Breakers

Ampere Rating ▲	One-pole		Two-pole—Common Trip		Two-pole—Common Trip ◊		Three-pole—Common Trip	
	Catalog No.	$ Price	Catalog No.	$ Price	Catalog No.	$ Price	Catalog No.	$ Price
QOB Bolt-On								
	120 Vac—10 k AIR 48 Vdc—5 k AIR		120/240 Vac—10 k AIR 48 Vdc—5 k AIR ▽		240 Vac—10 k AIR		240 Vac—10 k AIR 48 Vdc—5 k AIR ▽	
10 A	QOB110	39.80	QOB210	89.	—	—	QOB310	293.
15 A	QOB115☆▼	39.80	QOB215☆	89.	QOB215H	240.	QOB315☆	293.
20 A	QOB120☆▼	39.80	QOB220☆	89.	QOB220H	240.	QOB320☆	293.
25 A	QOB125☆	39.80	QOB225☆	89.	QOB225H	240.	QOB325☆	293.
30 A	QOB130☆	39.80	QOB230☆	89.	QOB230H	240.	QOB330☆	293.
35 A	QOB135☆	39.80	QOB235☆	89.	—	—	QOB335☆	293.
40 A	QOB140☆	39.80	QOB240☆	89.	QOB240H	240.	QOB340☆	293.
45 A	QOB145☆	39.80	QOB245☆	89.	—	—	QOB345☆	293.
50 A	QOB150☆	39.80	QOB250☆	89.	QOB250H	240.	QOB350☆	293.
60 A	QOB160☆	39.80	QOB260☆	89.	QOB260H	240.	QOB360☆	293.
70 A	QOB170☆	78.	QOB270☆	168.	QOB270H	308.	QOB370☆▽	369.
80 A	—	—	QOB280☆▽	240.	QOB280H	366.	QOB380☆▽	419.
90 A	—	—	QOB290☆▽	240.	QOB290H	366.	QOB390☆▽	419.
100 A	—	—	QOB2100☆▽	240.	QOB2100H	366.	QOB3100☆▽	419.
110 A	—	—	QOB2110☆▽	501.	—	—	—	—
125 A	—	—	QOB2125☆▽	501.	—	—	—	—
Molded Case Switch 60 A max—240 Vac			QOB200	89.	—	—	QOB300	293.
Molded Case Switch 100 A max—240 Vac			QOB2000	234.	—	—	QOB3000	507.

Table 9.22: High Interrupting QOB and Specialty Circuit Breakers

Ampere Rating ▲	One-pole		Two-pole—Common Trip		Three-pole—Common Trip	
	Catalog No.	$ Price	Catalog No.	$ Price	Catalog No.	$ Price
QOB-VH						
	120 Vac—22 k AIR		120/240 Vac —22 k AIR		240 Vac—22 k AIR	
15 A	QOB115VH☆▼	72.	QOB215VH☆	171.	QOB315VH☆	440.
20 A	QOB120VH☆▼	72.	QOB220VH☆	171.	QOB320VH☆	440.
25 A	QOB125VH☆	72.	QOB225VH☆	171.	QOB325VH☆	440.
30 A	QOB130VH☆	72.	QOB230VH☆	171.	QOB330VH☆	440.
40 A	QOB140VH	86.	QOB240VH☆	171.	QOB340VH☆	440.
50 A	QOB150VH	86.	QOB250VH☆	171.	QOB350VH☆	440.
60 A	QOB160VH	86.	QOB260VH☆	171.	QOB360VH☆	440.
70 A	QOB170VH	137.	QOB270VH☆	273.	QOB370VH☆	560.
80 A	—	—	QOB280VH☆	384.	QOB380VH☆	629.
90 A	—	—	QOB290VH☆	384.	QOB390VH☆	629.
100 A	—	—	QOB2100VH☆	384.	QOB3100VH☆	629.
110 A	—	—	QOB2110VH☆	1110.	QOB3110VH ◒	1809.
125 A	—	—	QOB2125VH☆	1110.	QOB3125VH ◒	1809.
150 A	—	—	QOB2150VH ◒	1223.	QOB3150VH ◒	1809.
QHB						
	120 Vac—65 k AIR		120 Vac/240 Vac—65 k AIR		240 Vac—65 k AIR	
15 A	QHB115☆▼	122.	QHB215☆	342.	QHB315☆	596.
20 A	QHB120☆▼	122.	QHB220☆	342.	QHB320☆	596.
25 A	QHB125☆	122.	QHB225☆	342.	QHB325☆	596.
30 A	QHB130☆	122.	QHB230☆	342.	QHB330☆	596.
QOB-HID—HID circuit breakers □						
	120 Vac—10 k AIR		120/240 Vac—10 k AIR		240 Vac—10 k AIR	
15 A	QOB115HID▼	49.50	QOB215HID	108.	QOB315HID	327.
20 A	QOB120HID▼	49.50	QOB220HID	108.	QOB320HID	327.
25 A	QOB125HID	49.50	QOB225HID	108.	QOB325HID	327.
30 A	QOB130HID	49.50	QOB230HID	108.	QOB330HID	327.
40 A	QOB140HID	49.50	QOB240HID	108.	—	—
50 A	QOB150HID	49.50	QOB250HID	108.	—	—
QOB-SWN—Switch Neutral—Common Trip—NEC 514.11						
			1-pole—2-Wire 2 Spaces —120 Vac		2-pole—3-Wire 3 Spaces—120/240 Vac	
10 A	—	—	QOB210SWN	116.	QOB310SWN	170.
15 A	—	—	QOB215SWN	116.	QOB315SWN	170.
20 A	—	—	QOB220SWN	116.	QOB320SWN	170.
25 A	—	—	QOB225SWN	116.	QOB325SWN	170.
30 A	—	—	QOB230SWN	116.	QOB330SWN	170.
40 A	—	—	QOB240SWN	116.	QOB340SWN	170.
50 A	—	—	QOB250SWN	116.	QOB350SWN	170.

Table 9.23: QO/QOB Circuit Breaker Wire Sizes

Breaker Type	Ampere Rating ◑	Wire Size (AWG)	
		Al	Cu
QOB 1-pole	10–30 A	#14–8	#14–8
	10–30 A	—	two #14–10
	35–70 A	#8–2	#8–2
QOB 2-pole	10–30 A	#14–8	#14–8
	10–30 A	—	two #14–10
	35–70 A	#8–2	#8–2
	80–125 A	#4–2/0	#4–2/0
	150–200 A	#4–300 kcmil	#4–300 kcmil
QOB 3-pole	10–30 A	#14–8	#14–8
	35–70 A	#8–2	#8–2
	80–125 A	#4–2/0	#4–2/0
QOB-VH	110–150 A	#4–300 kcmil	#4–300 kcmil
QOB-GFI and QOB-EPD	15–30 A	#12–8	#14–8
	40, 50, or 60 A	#12–4	#14–6

◑ 10–30 A circuit breakers are suitable for use with 60 °C or 75 °C conductors. 35–60 A circuit breakers are suitable for use with 75 °C conductors.

Table 9.24: QO™ Arc-Fault Circuit Breakers ✪ ◪

Circuit Breaker Type	Ampere Rating ♦	1P 120 Vac 10 kAIR 1 Space Required		1P 120 Vac 22 kAIR 1 Space Required	
		Catalog Number	$ Price	Catalog Number	$ Price
Combination Arc-Fault Interupter	15 A	QOB115CAFI	306.	QOB115VHCAFI	612.
	20 A	QOB120CAFI	306.	QOB120VHCAFI	612.

Note: See Digest page 7-12 for accessories.

- ✪ UL Listed as HACR type for use with air conditioning, heating, and refrigeration equipment having motor group combinations and marked for use with HACR type circuit breakers.
- ◪ QO arc-fault circuit breakers provide branch feeder protection (for example, QO115AFI) or combination protection (for example, QO115CAFI) as required by the NEC and local code adoption, and comply with UL 1699.
- ♦ 10–30 A circuit breakers are suitable for use with 60 °C or 75 °C conductors. 35–60 A circuit breakers are suitable for use with 75 °C conductors.

© 2012 Schneider Electric
All Rights Reserved

LC1D09

LC1D093

LC1D115

LC1DT20

3-Pole Contactors with AC and DC Operating Coils

Maximum Horsepower Ratings						Maximum Current		Auxiliary Contacts Built In		Catalog Number ▲■	AC Control Price	DC Control Price
Single Phase		Three Phase				Inductive AC3 Amperes	Resistive AC1 Amperes	N.O.	N.C.			
115 V hp	230 V hp	200 V hp	230 V hp	460 V hp	575 V hp							
0.5	1	2	2	5	7.5	9	20	1	1	LC1D09	**$ 94.**	**$119.**
1	2	3	3	7.5	10	12	25	1	1	LC1D12	**119.**	**149.**
1	3	5	5	10	15	18	32	1	1	LC1D18	**136.**	**160.**
2	3 5	7.5 10	7.5 10	15 20	20 30	25 32	40 50	1 1	1 1	LC1D25 LC1D32	**151.** **172.**	**181.** **213.**
3	5 7.5	10 15	10 15	30 40	30 40	40 50	60 70	1 1	1 1	LC1D40 LC1D50	**218.** **234.**	**275.** **291.**
5	10	20	20	50	50	65	80	1	1	LC1D65	**322.**	**379.**
7.5	15	25	30	60	60	80	110	1	1	LC1D80	**363.**	**420.**
. . .	. . .	30	40	75	100	115	175	1	1	LC1D115	**479.**	**479.**
. . .	. . .	40	50	100	125	150	200	1	1	LC1D150	**696.**	**696.**

4-pole Contactors with AC and DC Operating Coils

Maximum Current Utilization Categories	Number of Poles		Instantaneous Auxiliary Contacts		Catalog Number ▲■	AC Control Price	DC Control Price
AC-1	N.O.	N.C.	N.O.	N.C.			
20	4	0	1	1	LC1DT20	**$ 94.**	**$119.**
	2	2	1	1	LC1D098	**94.**	**119.**
25	4	0	1	1	LC1DT25	**119.**	**149.**
	2	2	1	1	LC1D128	**119.**	**149.**
32	4	0	1	1	LC1DT32	**149.**	**183.**
	2	2	1	1	LC1D188	**149.**	**183.**
40	4	0	1	1	LC1DT40	**193.**	**240.**
	2	2	1	1	LC1D258	**193.**	**240.**
60	4	0	1	1	LC1D40004	**296.**	**. . .**
	4	0	1	1	LP1D40004	**. . .**	**353.**
	2	2	1	1	LC1D40008	**296.**	**. . .**
	2	2	1	1	LP1D40008	**. . .**	**353.**
80	4	0	0	0	LC1D65004	**446.**	**. . .**
	4	0	0	0	LP1D65004	**. . .**	**503.**
	2	2	0	0	LC1D65008	**446.**	**. . .**
	2	2	0	0	LP1D65008	**. . .**	**503.**
125	4	0	0	0	LC1D80004	**489.**	**. . .**
	4	0	0	0	LP1D80004	**. . .**	**524.**
	2	2	0	0	LC1D80008	**489.**	**. . .**
	2	2	0	0	LP1D80008	**. . .**	**524.**
200	4	0	0	0	LC1D115004	**630.**	**630.**

▲ Use voltage codes from the "Voltage Codes" table below to complete the catalog number.
■ Contactor supplied with touch safe cable clamps. For ring terminal configuration on LC.D09–D32 and LC.DT20–DT40 contactors only, add "6" before coil voltage suffix. For spring terminal configuration add "3" before coil voltage suffix. No price adder for these modifications.

Voltage Codes (D-Line Only)▼

Contactor	Hz	24 V	48 V	110 V	120 V	125 V	208 V	220 V	240 V	250 V	440 V	480 V	600 V
AC													
LC1D40–LC1D150 only (see notes)	50	B5	E5	F5	. . .	. . .	. . .	M5★	U5	. . .	. . .	. . .	. . .
	60	B6	E6	F6	G6	. . .	L6	M6	U6	. . .	. . .	T6	X6♦
All (see notes)	50/60	B7	E7	F7	G7	. . .	LE7	M7	U7	. . .	. . .	T7★	X7★
DC (D09–D32, D115 and D150 coils with integral suppression device are fitted as standard)													
D09–D32 Low Consumption	. . .	BL	EL	FL	. . .	. . .	. . .	ML	. . .	UL	. . .	. . .	. . .
All	. . .	BD	ED	FD	. . .	GD	. . .	MD	. . .	UD	RD	. . .	. . .

♦ Not available for LC1D115 and LC1D150.
★ Not available for LC1D40–LC1D150.
▼ Other voltages available. See page 16-17.

Dimensions . . . . . pages 16-24–16-32
Overload Relays . . . . . pages 16-19–16-20
Accessories. . . . . pages 16-6–16-13
Replacement Coils . . . . . pages 16-15–16-18

For additional information on D-Line contactors, reference Catalog #8502CT9901R5/03.

© 2004 Schneider Electric
All Rights Reserved
7/16/04

LRD22

Ambient Compensated bi-metallic overload relays

LRD overload relays are designed for direct mounting to D-line contactors. To mount these overloads separately, select separate mount kits from the table below.

D-Line overload relays

Current Setting Range Amperes	For direct mounting to LC1●●●	Class 10 with Single Phase Sensitivity	Class 10 without Single Phase Sensitivity	Class 20 with Single Phase Sensitivity	Class 20 without Single Phase Sensitivity	Price
.10–.16	D09–D32	LRD01	LR3D01	. . .	. . .	
.16–.25	D09–D32	LRD02	LR3D02	. . .	. . .	
.25–.40	D09–D32	LRD03	LR3D03	. . .	. . .	
.40–.63	D09–D32	LRD04	LR3D04	. . .	. . .	
.63–1	D09–D32	LRD05	LR3D05	. . .	. . .	**$ 60.00**
1–1.6	D09–D32	LRD06	LR3D06	. . .	. . .	
1.6–2.5	D09–D32	LRD07	LR3D07	. . .	. . .	
2.5–4	D09–D32	LRD08	LR3D08	LRD1508	LR3D1508A1	
4–6	D09–D32	LRD10	LR3D10	LRD1510	LR3D1510A1	
5.5–8	D09–D32	LRD12	LR3D12	LRD1512	LR3D1512A1	
7–10	D09–D32	LRD14	LR3D14	LRD1514	LR3D1514A1	
9–13	D12–D32	LRD16	LR3D16	LRD1516	LR3D1516A1	**62.00**
12–18	D18–D32	LRD21	LR3D21	LRD1521	LR3D1521A1	
16–24	D25–D32	LRD22	LR3D22	. . .	. . .	
17–25	D25–D32	. . .	. . .	LRD1522	LR3D1522A1	
23–32	D25–D32	LRD32	LR3D32	. . .	. . .	
23–28	D25–D32	. . .	. . .	LRD1530	LR3D1530A1	**73.00**
25–32	D25–D32	. . .	. . .	LRD1532	LR3D1532A1	
30–38	D32	LRD35	LR3D35	. . .	. . .	
17–25	D40–D80	LRD3322	LR3D3322	LR2D3522	LR3D3522	
23–32	D40–D80	LRD3353	LR3D3353	LR2D3553	LR3D3553	
30–40	D40–D80	LRD3355	LR3D3355	LR2D3555	LR3D3555	**107.00**
37–50	D50–D80	LRD3357	LR3D3357	LR2D3557	LR3D3557	
48–65	D50–D80	LRD3359	LR3D3359	LR2D3559	LR3D3559	
55–70	D65–D80	LRD3361	LR3D3361	LR2D3561	LR3D3561	
63–80	D65–D80	LRD3363	LR3D3363	LR2D3563	LR3D3563	**127.00**
80–104	D80	LRD3365	. . .	. . .	. . .	
80–104	D115–D150	LRD4365	. . .	. . .	. . .	
95–120	D115–D150	LRD4367	. . .	. . .	. . .	**362.00**
110–140	D150	LRD4369	. . .	. . .	. . .	

Mounting Kits and Plates▲

Description	For use with overload relays:	Catalog Number	Price
Separate mounting kits for mounting to 35 mm omega rail or for panel mounting with screws	LRD01–35 and LR3D01–35	LAD7B10	**$ 8.70**
	LRD15●●	LAD7B105	**10.40**
	LR2D15●●	LA7D1064	**8.70**
	LR2D25●●	LA7D2064	**13.10**
	LRD3●●●, LR3D3●●●, LR2D35●●	LA7D3064	**17.50**
Mounting plates for screw mounting at 110 mm (4.3") centers	LRD01–35, LR3D01–35, LR2D15●●	DX1AP25	**11.00**
	LR2D25●●	DX1AP26	**12.00**
	LRD3●●●, LR3D3●●●, LR2D35●●	LA7D902	**16.40**

▲ When using mounting plates, separate mounting kits are also required.

LA7D901

Accessories

Description	For use with	Standard Packaging	Catalog Number	Price
Pre wiring kit allows direct connection of the N.C. contact of relay LRD01–D32 or LR3D01–D32 to the contactor	LC1D09 through D18	10	LAD7C1	**$ 8.70**
	LC1D25, D32	10	LAD7C2	**8.70**
Stop button locking device	All relays except LRD01–D32, LR3D01–D32 and LR9D	10	LA7D901	**2.20**
Remote stop/tripping or electrical reset♦	LRD01–D32, LR3D01–32	1	LAD703■	**43.70**
	All relays except LRD01–D32, LR3D01–D31	1	LA7D03■	**43.70**
Reset by flexible cable 500 mm (19.6 in.)	LRD01–D32	1	LAD7305	**100.00**

■ Part number to be completed by adding coil voltage code.

LA7D03

Control Circuit Voltages for LA7D03 and LAD703

Volts	12	24	48	110	220/230	380/400	415/440
AC 50/60 Hz	J★	B	E	F	M	Q	N
DC	J	B	E	F	M	. . .	. . .

♦ The time that the LA7D03 can remain energized depends on its rest time; 1 s pulse wth 9 s rest time; 5 s pulse with 30 s rest time; 10 s pulse with 90 s rest time; maximum pulse duration of 20 s with rest time of 300 s. Consumption on inrush and sealed : < 100 VA
★ Not available for LRD01-D32, LR3D01-D32.

Dimensions. . . . . page 16-30

For additional information, reference Catalog #8502CT9901R5/03.

© 2004 Schneider Electric
All Rights Reserved
6/14/04

PS5R Slim Line Specifications

Wattage		**30W**	**60W**	**90W**
Type		**PS5R-SC12 / PS5R-SC24**	**PS5R-SD24**	**PS5R-SE24**
Input	**Input Voltage (single phase, 2-wire)**	85 to 264VAC, 100 to 370VDC		
	Input Current (typical) **100VAC**	0.9A	1.7A	2.3A
	Input Current (typical) **200VAC**	0.6A	1.0A	1.4A
	Internal Fuse Rating	3.15A	3.15A	4A
	Inrush Current (cold start) **200VAC**	50A max.		
	Leakage Current	0.75mA max.		
	Typical Efficiency **12VDC**	78%	–	–
	Typical Efficiency **24VDC**	80%	83%	82%
Output	**Output Current Ratings at 12VDC**	2.5A	–	–
	Output Current Ratings at 24VDC	1.3A	2.5A	3.75A
	Voltage Adjustment	±10% (V.ADJ control on front)		
	Output Holding Time	20ms min. (at rated input and output)		
	Rise Time	100ms max. (at rated input and output)		
	Line Regulation	0.4% max.		
	Load Regulation	1.5% max.		
	Temperature Regulation	0.05% degree C max.		
	Ripple Voltage	2% p-p max. including noise		
	Overcurrent Protection	105% or more, auto reset		103% to 110%, auto reset
	Overvoltage Protection	120% min. SHUTDOWN		
	Dielectric Strength	Between input and ground: 2000VAC, 1 minute *		
	Insulation Resistance	Between input and output terminals: 100MΩ min.		
	Operating Temperature	-10 to +60°C (14 to 140°F)		
	Storage Temperature	-25 to +75°C (-13 to +167°F)		
	Operating Humidity	20 to 90% relative humidity (no condensation, no freezing)		
	Vibration Resistance	Frequency 10 to 55Hz, Amplitude 0.375mm		
	Shock Resistance	300m/s² 3 times each in 6 axes (150 m/s² using mounting bracket)		
	Approvals	EMC: EN61204-3 (EMI: Class B, EMS: Industrial), LVD: EN60950, EN50178 listed, UL 1604, UL1310 (PS5R-SC, -SD), c-UL (CSA 22.2 No. 14)		
	Harmonic Directive (EN61000-3-2)	N/A	N/A	EN61000-3-2 A14 class A
	Weight (Approx.)	250g	285g	440g
	Terminal Screw	M3.5 slotted-Phillips head screw (screw terminal type)		
	IP Protection	IP20 (finger-safe)		
	Dimensions HxWxD (mm)	95 x 36 x 108	95 x 36 x 108	115 x 46 x 121
	Dimensions HxWxD (inches)	3.74 x 1.42 x 4.25	3.74 x 1.42 x 4.25	4.53 x 1.81 x 4.76

* Between input and output: 3000VAC, 1 minute; Between output and ground: 500VAC, 1 minute

UL 489 DIN Rail Miniature Circuit Breakers

WMZ Circuit Breakers

PRODUCT OVERVIEW

Optimum and Efficient Protection for Every Application

Optimum product quality, tested reliability and safety stand for best protection of personnel, installations and plant. Eaton's WMZ DIN rail mountable circuit breaker is designed for use in branch service applications.

Powerful Offering for Machine and System Builders

The WMZ is available with C and D characteristics in accordance with UL® 489, CSA® C22.2 No.5; UL 1077, CSA C22.2 No.235 and IEC 60947-2.

Typical Applications

Feeder and Branch Circuit Protection

- Convenience receptacle circuits (internal / external)
- Motor control circuits
- Load circuits leaving the equipment (external)
- HACR equipment (heating, air conditioning, refrigeration) (internal / external)
- PLC I/O points
- Computers
- Power supplies
- Control instrumentation
- Relays
- UPS
- Power conditioners

Features

- Complete range of UL 489 listed DIN rail mounted miniature circuit breakers up to 40 ampere current rating
- Standard ratings of 10 kAIC at 277/480 Vac
- Select amperages available at 14 kAIC at 277/480 Vac and 10 kAIC at125 Vdc
- Current limiting design provides fast short-circuit interruption that reduces the let-through energy, which can damage the circuit
- Suitable for branch circuit device protection
- Thermal-magnetic overcurrent protection
  - Two levels of short-circuit protection, categorized by C and D curves
- Trip-free design — breaker can not be defeated by holding the handle in the ON position
- Captive screws cannot be lost
- SWD (switching duty) — suitable for switching fluorescent lighting loads ($I_n \leq 20A$)
- Fulfill UL 489, CSA C22.2 No.5 and also IEC 60947-2 Standard
- For use in applications for which UL 1077 or CSA C22.2 No.235 are also allowed
- Field installable shunt trip and auxiliary switch subsequent mounting
- Separate version for ring-tongue connection (Type WMZT….T), terminal screws can be removed (on both sides)
- Module width of only 17.7 mm (per pole)
- Contact Position Indicator (red / green)
- Easy installation on DIN rail
- Possibility for sealing the toggle in ON or OFF position

WMZ Complies with the Latest National and International Standards

Standards — Feeder and Branch Circuit Protection

UL 489

Standard for molded case circuit breakers (MCCB) for feeder and branch circuit protection.	UL®
Products meet the requirements of the National Electrical Code® (NEC®).	

CSA C22.2 No.5

Standard for molded case circuit breakers (MCCB) for feeder and branch circuit protection (corresponds closely to UL 489 Standard).	CSA®
Products meet the requirements of the Canadian Electrical Code (CEC).	

UL 489 DIN Rail Miniature Circuit Breakers

WMZ Circuit Breakers

PRODUCT OVERVIEW

Tripping Characteristics

Eaton WMZ branch circuit breakers are available with "C" and "D" tripping characteristics.

C-curve devices are suitable for application where medium levels of inrush current are expected. Applications include small transformers, lighting, pilot devices, control circuits and coils. C-curve devices provide a medium magnetic trip point.

D-curve devices are suitable for applications where high levels of inrush current are expected. The high magnetic trip point prevents nuisance tripping in high inductive applications such as motors, transformers and power supplies.

Eaton WMZ devices are current limiting, which means they interrupt fault currents within one half cycle of the fault. Current limiting devices offer superior protection by reducing peak let-through current and energy.

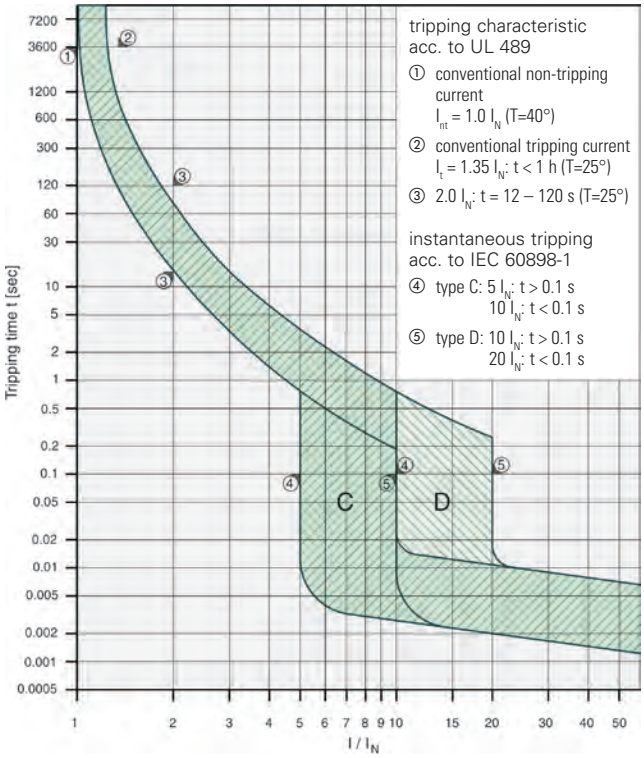

Device Printing on Front and Side

Installation options

These branch circuit breakers are available in two terminal configurations: standard box terminals that accept multiple conductors and ring-tongue terminals, ideally suited to demanding requirements of the semi-conductor industry. All breakers mount on standard 35 mm DIN rail. Bus connectors and feeder terminal facilitate mounting and wiring of multiple miniature circuit breaker arrays in control panel assemblies. These circuit breakers can also be reverse feed.

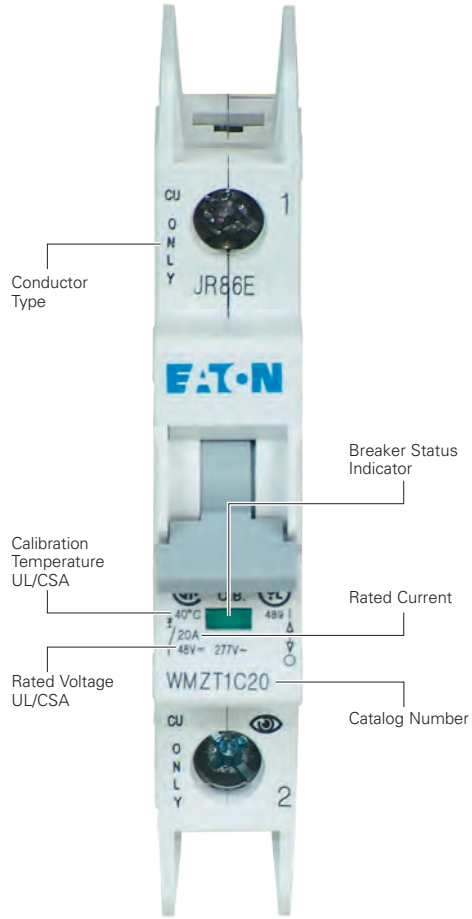

Catalog Numbering System

WMZ T 1 C 16 T

Breaker Family
WMZ = WMZ UL Circuit Breaker

Breaker Type
T = 10 kAIC
H = 14 kAIC ①
D = 10 kAIC/DC ①②

Number of Poles
1 = 1-Pole
2 = 2-Pole
3 = 3-Pole ③

Protective Curve
C = C Curve (5–10X I_n)
D = D Curve (10–20X I_n) ③

Ampere Rating

X0 = 0.5 Amps	**10** = 10 Amps
01 = 1 Amps	**13** = 13 Amps
X1 = 1.5 Amps	**15** = 15 Amps
02 = 2 Amps	**16** = 16 Amps
03 = 3 Amps	**20** = 20 Amps
04 = 4 Amps	**25** = 25 Amps
05 = 5 Amps	**30** = 30 Amps
06 = 6 Amps	**32** = 32 Amps
07 = 7 Amps	**40** = 40 Amps
08 = 8 Amps	

Terminal
T = Ring Terminals
[blank] = Standard Box Terminals

① Limited curve and ampere offerings.
② 125 Vdc for 1-Pole, 250 Vdc for 2-pole in series.
③ Not offered for Type WMZD.

UL 489 DIN Rail Miniature Circuit Breakers

WMZ Circuit Breakers

PRODUCT SELECTION

WMZT Product Selection

- UL approved (UL 489) and CSA Certified (CSA C22.2 No.5-02) as Branch Circuit Breakers
- Interrupting capacity: 10 kA UL/CSA; 15 kA IEC 60947
- Current limiting device
- Optional connections for ring-tongue terminals

WMZT UL 489 Circuit Breakers — 10 kAIC

Amperes	1-Pole Catalog Number	2-Pole Catalog Number	3-Pole Catalog Number
C Curve (5 – 10X I_n Current Rating)			
0.5	WMZT1CX0	WMZT2CX0	WMZT3CX0
1	WMZT1C01	WMZT2C01	WMZT3C01
1.5	WMZT1CX1	WMZT2CX1	WMZT3CX1
2	WMZT1C02	WMZT2C02	WMZT3C02
3	WMZT1C03	WMZT2C03	WMZT3C03
4	WMZT1C04	WMZT2C00	WMZT3C04
5	WMZT1C05	WMZT2C05	WMZT3C05
6	WMZT1C06	WMZT2C06	WMZT3C06
7	WMZT1C07	WMZT2C07	WMZT3C07
8	WMZT1C08	WMZT2C08	WMZT3C08
10	WMZT1C10	WMZT2C10	WMZT3C10
13	WMZT1C13	WMZT2C13	WMZT3C13
15	WMZT1C15	WMZT2C15	WMZT3C15
16	WMZT1C16	WMZT2C16	WMZT3C16
20	WMZT1C20	WMZT2C20	WMZT3C20
25	WMZT1C25	WMZT2C25	WMZT3C25
30	WMZT1C30	WMZT2C30	WMZT3C30
32	WMZT1C32	WMZT2C32	WMZT3C32
40	WMZT1C40	WMZT2C40	WMZT3C40
D Curve (10 – 20X I_n Current Rating)			
0.5	WMZT1DX0	WMZT2DX0	WMZT3DX0
1	WMZT1D01	WMZT2D01	WMZT3D01
1.5	WMZT1DX1	WMZT2DX1	WMZT3DX1
2	WMZT1D02	WMZT2D02	WMZT3D02
3	WMZT1D03	WMZT2D03	WMZT3D03
4	WMZT1D04	WMZT2D04	WMZT3D04
5	WMZT1D05	WMZT2D05	WMZT3D05
6	WMZT1D06	WMZT2D06	WMZT3D06
7	WMZT1D07	WMZT2D07	WMZT3D07
8	WMZT1D08	WMZT2D08	WMZT3D08
10	WMZT1D10	WMZT2D10	WMZT3D10
13	WMZT1D13	WMZT2D13	WMZT3D13
15	WMZT1D15	WMZT2D15	WMZT3D15
16	WMZT1D16	WMZT2D16	WMZT3D16
20	WMZT1D20	WMZT2D20	WMZT3D20
25	WMZT1D25	WMZT2D25	WMZT3D25
30	WMZT1D30	WMZT2D30	WMZT3D30
32	WMZT1D32	WMZT2D32	WMZT3D32
40	WMZT1D40	WMZT2D40	WMZT3D40

WMZT UL 489 Circuit Breakers with Ring-Tongue Terminals — 10 kAIC

Amperes	1-Pole Catalog Number	2-Pole Catalog Number	3-Pole Catalog Number
C Curve with Ring-Tongue Terminals (5 – 10X I_n Current Rating)			
0.5	WMZT1CX0T	WMZT2CX0T	WMZT3CX0T
1	WMZT1C01T	WMZT2C01T	WMZT3C01T
1.5	WMZT1CX1T	WMZT2CX1T	WMZT3CX1T
2	WMZT1C02T	WMZT2C02T	WMZT3C02T
3	WMZT1C03T	WMZT2C03T	WMZT3C03T
4	WMZT1C04T	WMZT2C04T	WMZT3C04T
5	WMZT1C05T	WMZT2C05T	WMZT3C05T
6	WMZT1C06T	WMZT2C06T	WMZT3C06T
7	WMZT1C07T	WMZT2C07T	WMZT3C07T
8	WMZT1C08T	WMZT2C08T	WMZT3C08T
10	WMZT1C10T	WMZT2C10T	WMZT3C10T
13	WMZT1C13T	WMZT2C13T	WMZT3C13T
15	WMZT1C15T	WMZT2C15T	WMZT3C15T
16	WMZT1C16T	WMZT2C16T	WMZT3C16T
20	WMZT1C20T	WMZT2C20T	WMZT3C20T
25	WMZT1C25T	WMZT2C25T	WMZT3C25T
30	WMZT1C30T	WMZT2C30T	WMZT3C30T
32	WMZT1C32T	WMZT2C32T	WMZT3C32T
40	WMZT1C40T	WMZT2C40T	WMZT3C40T
D Curve with Ring-Tongue Terminals (10 – 20X I_n Current Rating)			
0.5	WMZT1DX0T	WMZT2DX0T	WMZT3DX0T
1	WMZT1D01T	WMZT2D01T	WMZT3D01T
1.5	WMZT1DX1T	WMZT2DX1T	WMZT3DX1T
2	WMZT1D02T	WMZT2D02T	WMZT3D02T
3	WMZT1D03T	WMZT2D03T	WMZT3D03T
4	WMZT1D04T	WMZT2D04T	WMZT3D04T
5	WMZT1D05T	WMZT2D05T	WMZT3D05T
6	WMZT1D06T	WMZT2D06T	WMZT3D06T
7	WMZT1D07T	WMZT2D07T	WMZT3D07T
8	WMZT1D08T	WMZT2D08T	WMZT3D08T
10	WMZT1D10T	WMZT2D10T	WMZT3D10T
13	WMZT1D13T	WMZT2D13T	WMZT3D13T
15	WMZT1D15T	WMZT2D15T	WMZT3D15T
16	WMZT1D16T	WMZT2D16T	WMZT3D16T
20	WMZT1D20T	WMZT2D20T	WMZT3D20T
25	WMZT1D25T	WMZT2D25T	WMZT3D25T
30	WMZT1D30T	WMZT2D30T	WMZT3D30T
32	WMZT1D32T	WMZT2D32T	WMZT3D32T
40	WMZT1D40T	WMZT2D40T	WMZT3D40T

For our complete product offering, see the Distribution Products Catalog (CA08101001E).

Let-Through Energy

Characteristic C (0.5 – 32A), 277V

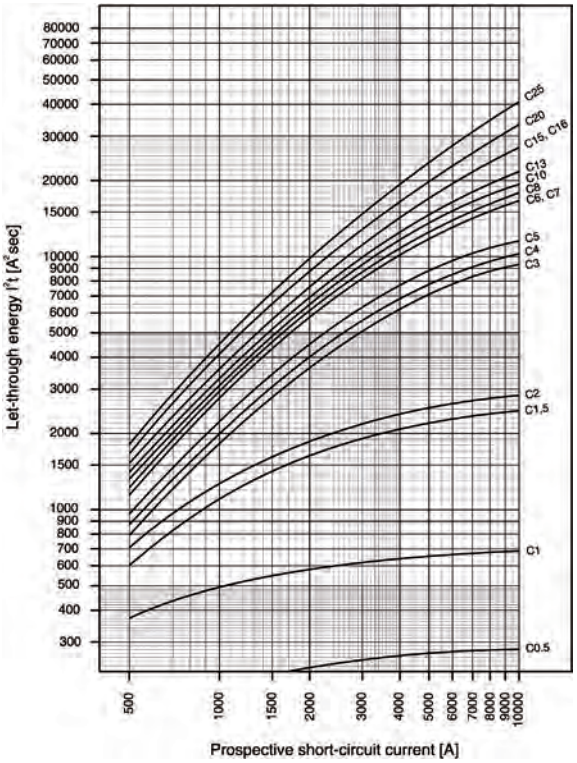

Characteristic C (40A), 240V

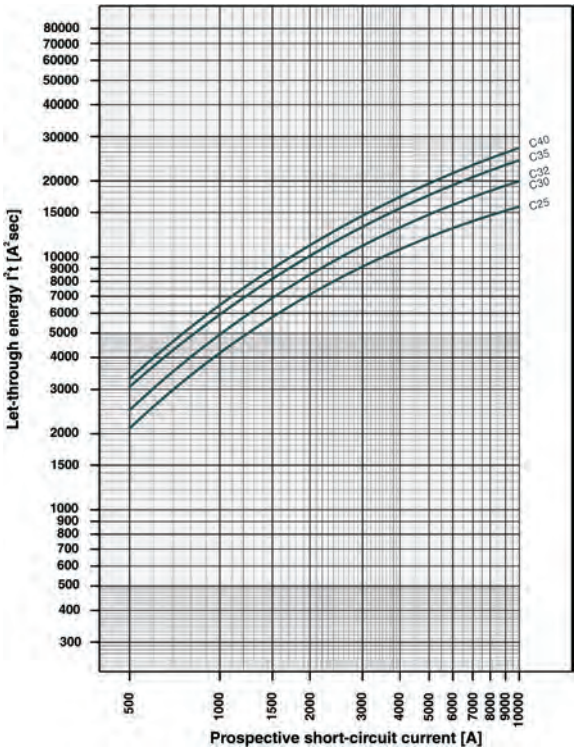

Characteristic D (0.5 – 32A), 277V

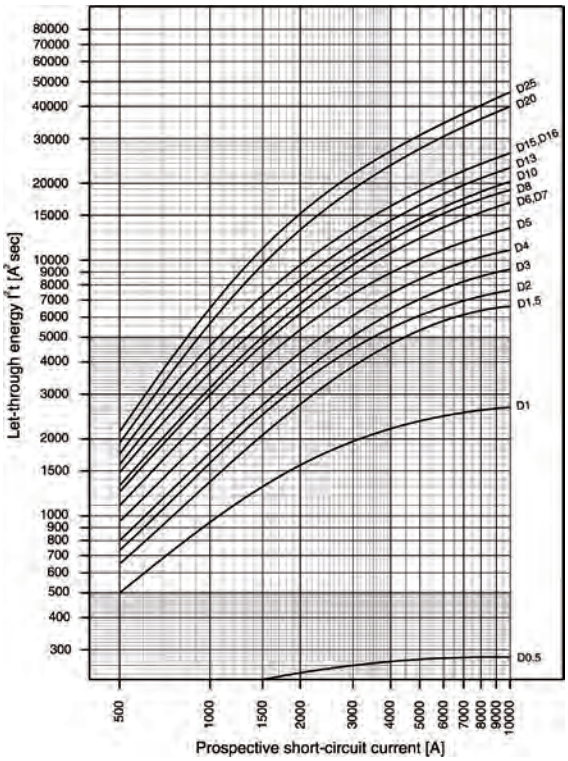

Characteristic D (40A), 240V

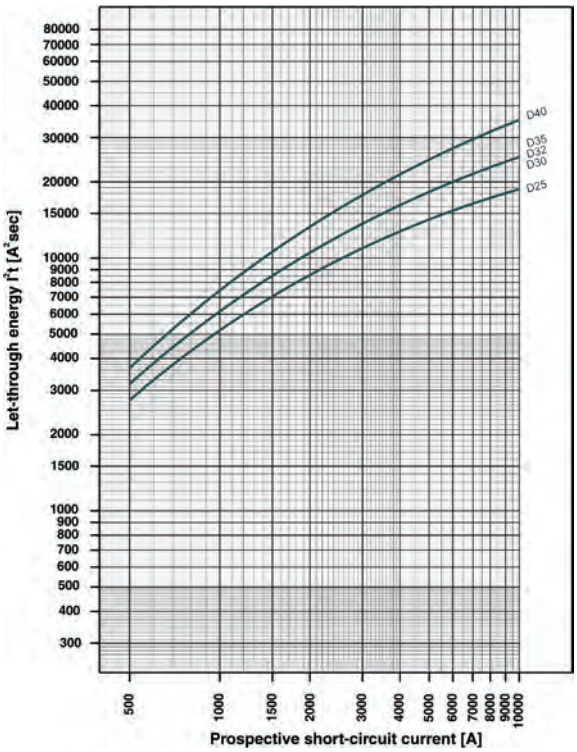

UL 489 DIN Rail Miniature Circuit Breakers

WMZ Circuit Breakers

TECHNICAL DATA

Influence of Ambient Temperature T on Load Carrying Capacity

Device Market Current Rating I_n (A) at 40°C	I_n (A) at Higher Ambient Temperature							
	15°C	20°C	25°C	30°C	40°C	50°C	55°C	60°C
0.5	0.6	0.5	0.5	0.5	0.5	0.5	0.5	0.5
1.0	1.1	1.1	1.1	1.0	1.0	1.0	0.9	0.9
1.5	1.7	1.6	1.6	1.6	1.5	1.4	1.4	1.4
2.0	2.2	2.2	2.1	2.1	2.0	1.9	1.9	1.8
3.0	3.3	3.2	3.2	3.1	3.0	2.9	2.9	2.8
4.0	4.4	4.3	4.2	4.2	4.0	3.8	3.8	3.7
5.0	5.5	5.4	5.3	5.2	5.0	4.8	4.7	4.6
6.0	6.6	6.5	6.4	6.2	6.0	5.8	5.6	5.5
7.0	7.7	7.6	7.4	7.3	7.0	6.7	6.6	6.4
8.0	8.8	8.6	8.5	8.3	8.0	7.7	7.5	7.4
10.0	11.0	10.8	10.6	10.4	10.0	9.6	9.4	9.2
13.0	14.3	14.0	13.8	13.5	13.0	12.5	12.5	12.0
15.0	16.5	16.2	15.9	15.6	15.0	14.4	14.1	13.8
16.0	17.6	17.3	17.0	16.6	16.0	15.4	15.0	14.7
20.0	22.0	21.6	21.2	20.8	20.0	19.2	18.8	18.4
25.0	27.5	27.0	26.5	26.0	25.0	24.0	23.3	23.0
30.0	33.0	32.4	31.8	31.2	30.0	28.8	28.2	27.6
32.0	35.2	34.6	33.9	33.3	32.0	30.7	30.1	29.4
40.0	44.0	43.2	42.4	41.6	40.0	38.4	37.6	36.8

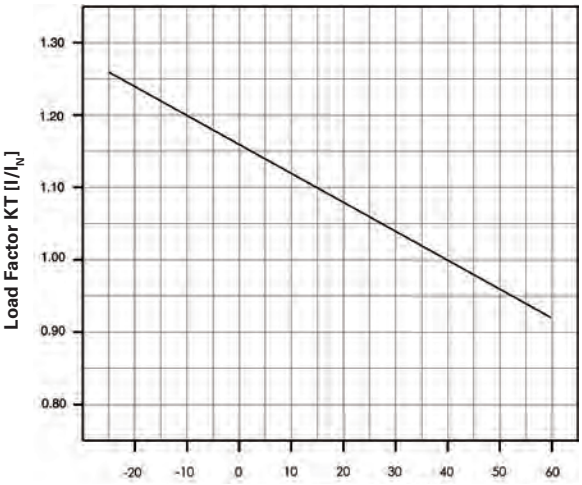

Ambient Temperature T [°C]

Maximum Load I_L at ambient temperature T: I_L (T) = I_N K_T(T)

Technical Data

RU Series Universal Relays

Key features:

- Full featured universal miniature relays
- Designed with environment taken into consideration
- Two terminal styles: plug-in and PCB mount
- Non-polarized LED indicator
- No internal wires, lead-free construction
- Cadmium-free contacts
- Mechanical flag indicator
- Manual latching lever with color coding for AC or DC coil
- Snap-on yellow marking plate; optional marking plates are available in four other colors
- Maximum contact ratings: 10A (RU2), 6A (RU4), 3A (RU42)
- UL Recognized, CSA Certified, EN Compliant

EN61810-1

With Latching or Momentary Lever

Mechanical Indicator*
The contact position can be confirmed through the five small windows.

Marking Plate
Standard yellow marking plate is easily replaced with optional marking plates in four colors for easy identification of relays.

LED Indicator*
Non-polarized green LED indicator is standard provision for plug-in terminal, latching lever types

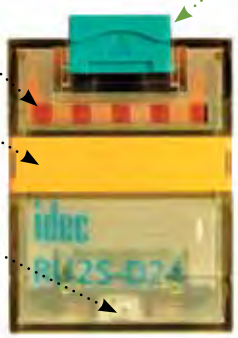

Latching and Momentary Lever
Using the lever, operation can be checked without energizing the coil. The lever is color coded for AC and DC coils.

	Latching	Momentary
AC coil:	Orange	Red
DC coil:	Green	Blue

In Normal Operation

Note: Turn off the power to the relay coil when using the latching lever. After checking the operation, return the latching lever in the normal position.

Standard (without lever)

AC/DC Color Marking
For identification of AC or DC coils.
AC coil: Yellow
DC coil: Blue

Mechanical Indicator*

Marking Plate

LED Indicator*
Non-polarized green LED indicator is standard provision for plug-in terminal types.

AC Coil

DC Coil

Coil Voltage	Tape Color
24V AC	White
100 to 110V AC	Clear
110 to 120V AC	Blue
200 to 220V AC	Black
220 to 240V AC	Red
24V DC	Green
6V DC	Voltage marking on yellow tape
12V DC	
48V DC	
110V DC	

*Not available on PCB type.

Part Number Selection

Contact	Model	Part Number: Standard	Part Number: With Latching Lever	Part Number: With Momentary Lever	Coil Voltage Code (Standard Stock in bold)
DPDT (10A)	Standard	RU2S-C-□	RU2S-□	RU2S-M-□	A24, **A110**, **A220** D6, D12, **D24**, D48, D110
	With RC (AC coil only)	RU2S-CR-□	RU2S-R-□	RU2S-MR-□	A110, A220
	With diode (DC coil only)	RU2S-CD-□	RU2S-D-□	RU2S-MD-□	D6, D12, **D24**, D48, D110
	PCB	RU2V-NF-□	—	—	A24, A110, A220 D6, D12, **D24**, D48, D110
4PDT (6A)	Standard	RU4S-C-□	RU4S-□	RU4S-M-□	A24, **A110**, **A220** D6, D12, **D24**, D48, D110
	With RC (AC coil only)	RU4S-CR-□	RU4S-R-□	RU4S-MR-□	A110, A220
	With diode (DC coil only)	RU4S-CD-□	RU4S-D-□	RU4S-MD-□	D6, D12, D24, D48, D110
	PCB	RU4V-NF-□	—	—	A24, **A110**, A220 D6, D12, **D24**, D48, D110
4PDT Bifurcated (3A)	Standard	RU42S-C-□	RU42S-□	RU42S-M-□	A24, A110, A220 D6, D12, **D24**, D48, D110
	With RC (AC coil only)	RU42S-CR-□	RU42S-R-□	RU42S-MR-□	A110, A220
	With diode (DC coil only)	RU42S-CD-□	RU42S-D-□	RU42S-MD-□	D6, D12, D24, D48, D110
	PCB	RU42V-NF-□	—	—	A24, A110, A220 D6, D12, **D24**, D48, D110

1. Plug-in terminal models have an LED indicator and a mechanical indicator as standard.
2. PCB models do not have an LED indicator or a mechanical indicator.

Ordering Information

When ordering, specify the Part No. and coil voltage code:

(example) **RU2S-C** **A110**

Part No. — Coil Voltage Code

Coil Voltage Table

Coil Voltage Code	A24	A110	A220	D6	D12	D24	D48	D110
Coil Rating	24V AC	110-120V AC	220-240V AC	6V DC	12V DC	24V DC	48V DC	110V DC

Sockets

Relays	Spring Clamp DIN Rail Mount	Standard DIN Rail Mount	Finger-safe DIN Rail Mount	Panel Mount	PCB Mount
RU2S (DPDT)	SU2S-11L	SM2S-05	SM2S-05C	SY4S-51	SM2S-61 SM2S-62
RU4S (4PDT) RU42S (4PDT)	SU4S-11L	SY4S-05	SY4S-05C		SY4S-61 SY4S-62

Hold Down Springs & Clips

Appearance	Item	Relay	For DIN Mount Socket	For Through Panel & PCB Mount Socket
	Pullover Wire Spring	RU2S/RU4S/ RU42S	SY4S-02F1	SY4S-51F1
	Leaf Spring (side latch)	RU2S/RU4S/ RU42S	SFA-202*	SFA-302*
	Leaf Spring (top latch)	RU2S/RU4S/ RU42S	SFA-101*	SFA-301*

Note: Order 2 pieces for each relay

Accessories

Name	Part Number	Color Code *
Marking Plate	RU9Z-P*	A (orange), G (green), S (blue), W (white), Y (yellow)

Specify a color code when ordering. The marking plate can be removed from the relay by inserting a flat screwdriver under the marking plate.

Specifications

Model (Contact)	RU2 (DPDT)	RU4 (4PDT)	RU42 (4PDT-bifurcated)
Contact Material	Silver alloy	Silver (gold clad)	Silver-nickel (gold clad)
Contact Resistance [1]	50 mΩ maximum		
Minimum Applicable Load [2]	24V DC, 5 mA (reference value)	1V DC, 1 mA	1V DC, 0.1 mA
Operating Time [3]	20 ms maximum		
Release Time [3]	20 ms maximum		
Power Consumption	AC: 1.1 to 1.4VA (50 Hz), 0.9 to 1.2VA (60 Hz) DC: 0.9 to 1.0W		
Insulation Resistance	100MΩ minimum (500V DC megger)		
Dielectric Strength	Between contact and coil: 2500V AC, 1 minute		
	Between contacts of different poles:		
	2500V AC, 1 minute	2000V AC, 1 minute	
	Between contacts of the same pole: 1000V AC, 1 minute		
Operating Frequency	Electrical: 1800 operations/h maximum Mechanical: 18,000 operations/h maximum		
Vibration Resistance	Damage limits: 10 to 55 Hz, amplitude 0.5 mm Operating extremes: 10 to 55 Hz, amplitude 0.5 mm		
Shock Resistance	Damage limits: 1000 m/s^2 (100G) Operating extremes: 150 m/s^2 (15G)		
Mechanical Life	AC: 50,000,000 operations DC: 100,000,000 operations		50,000,000 operations
Electrical Life [4]	See table on page 794		
Operating Temperature [5]	PCB model: –55 to +70°C (no freezing) Blade model: –55 to +60°C (no freezing)		
Operating Humidity	5 to 85% RH (no condensation)		
Weight	Approx. 35g		

1. Measured using 5V DC, 1A voltage drop method
2. Measured at operating frequency of 120 operations/min (failure rate level P, reference value)
3. Measured at the rated voltage (at 20°C), excluding contact bouncing;
   Release time of AC relays with RC: 25 ms maximum
   Release time of DC relays with diode: 40 ms maximum
4. Contact Load and Electrical Life (at ambient temperature 20°C)
5. Measured at the rated voltage.

Accessories

Item	Appearance	Use with	Part No.	Remarks
Aluminum DIN Rail (1 meter length)		All DIN rail sockets	BNDN1000	The BNDN1000 is designed to accommodate DIN mount sockets. Made of durable extruded aluminum, the BNDN1000 measures 0.413 (10.5mm) in height and 1.37 (35mm) in width (DIN standard). Standard length is 39" (1,000mm).
DIN Rail End Stop		DIN rail	BNL5	9.1 mm wide.
Replacement Hold-Down Spring Anchor		Horseshoe clip for DIN rail sockets	Y778-011	For use on DIN rail mount socket when using pullover wire hold down spring. 2 pieces included with each socket.

Coil Ratings

Rated Voltage (V)		Coil Voltage Code	Rated Current (mA) ±15% (at 20°C)		Coil Resistance (Ω) ±10% (at 20°C)	Operating Characteristics (values at 20°C)		
			50 Hz	60 Hz		Maximum Continuous Applied Voltage	Pickup Voltage	Dropout Voltage
AC (50/60 Hz)	24	A24	49.3	42.5	164	110%	80% maximum	30% minimum
	110-120	A110	8.4-10.0	7.1-8.2	4,550			
	220-240	A220	4.2-5.0	3.6-4.2	18,230			
DC	6	D6	155		40	110%	80% maximum	10% minimum
	12	D12	80		160			
	24	D24	44.7		605			
	48	D48	18		2,560			
	110	D110	8.9		12,100			

1. The rated current includes the current of the LED indicator.

Surge Suppressor Ratings

Model		Ratings
AC Coil	With RC	RC series circuit R: 20 kΩ, C: 0.033 μF
DC Coil	With Diode	Diode reverse voltage: 1000V Diode forward current: 1A

UL and c-UL Ratings

Voltage	Resistive			General Use			Horse Power Rating		
	RU2	RU4	RU42	RU2	RU4	RU42	RU2	RU4	RU42
250V AC	10A	—	3A	—	6A	—	—	1/10HP	—
30V DC	10A	6A	3A	—	—	—	—	—	—

Contact Ratings

Maximum Contact Capacity						
Contact	Continuous Current	Allowable Contact Power		Voltage (V)	Rated Load	
		Resistive Load	Inductive Load		Res. Load	Ind. Load
DPDT	10A	2500VA AC	1250VA AC	250 AC	10A	5A
		300W DC	150W DC	30 DC	10A	5A
4PDT	6A	1500VA AC	600VA AC	250 AC	6A	0.8A
		180W DC	90W DC	30 DC	6A	1.5A
4PDT bifurcated	3A	750VA AC	200VA AC	250 AC	3A	0.8A
		90W DC	45W DC	30 DC	3A	1.5A

1. On 4PDT relays, the maximum allowable total current of neighboring two poles is 6A. At the rated load, make sure that the total current of neighboring two poles does not exceed 6A (3A + 3A = 6A).
2. Inductive load for the rated load — cos ø = 0.3, L/R = 7 ms

CSA Ratings

Voltage	Resistive
	RU42
250V AC	3A
30V DC	3A

TÜV Ratings

Voltage	Resistive			Inductive		
	RU2	RU4	RU42	RU2	RU4	RU42
250V AC	10A	6A	3A	5A	0.8A	0.8A
30V DC	10A	6A	3A	5A	1.5A	1.5A

Socket Specifications

	Sockets	Terminal	Electrical Rating	Wire Size	Torque
DIN Rail Mount Sockets	SU2S-11L	Spring clamp terminals	250V/10A	24-16 AWG	—
	SU4S-11L	Spring clamp terminals	250V/6A (using RU4), 10A (using RU2)	24-16 AWG	—
	SM2S-05	M3 screw with captive wire clamp	300V, 10A	Maximum up to 2–#14AWG	5.5 - 9in•lbs
	SM2S-05C	M3 screw with captive wire clamp, fingersafe	300V, 10A	Maximum up to 2–#14AWG	5.5 - 9in•lbs
	SY4S-05	M3 screw with captive wire clamp	300V, 7A (using RU4), 10A (using RU2)	Maximum up to 2–#14AWG	5.5 - 9in•lbs
	SY4S-05C	M3 screw with captive wire clamp, fingersafe	300V, 7A (using RU4), 10A (using RU2)	Maximum up to 2–#14AWG	5.5 - 9in•lbs
Through Panel Mount Socket	SY4S-51	Solder	300V, 7A	—	—
PCB Mount Socket	SY4S-61	PCB mount	300V, 7A	—	—
	SY4S-62	PCB mount	250V, 7A	—	—

Electrical Life Curves

RU2 (Resistive Load)

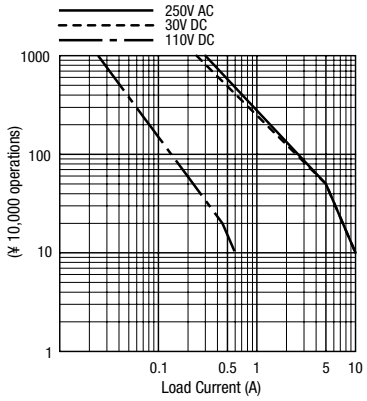

RU4 (Resistive Load)

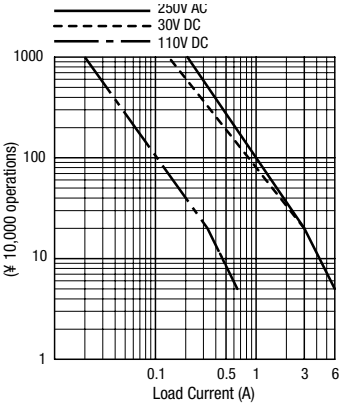

RU42 (Resistive Load)

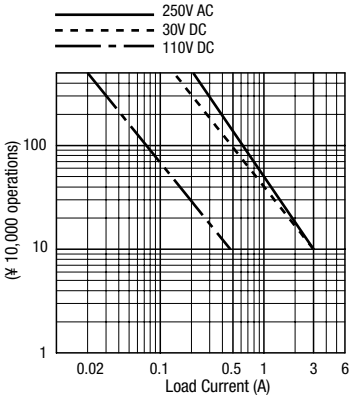

RU2 (Inductive Load)

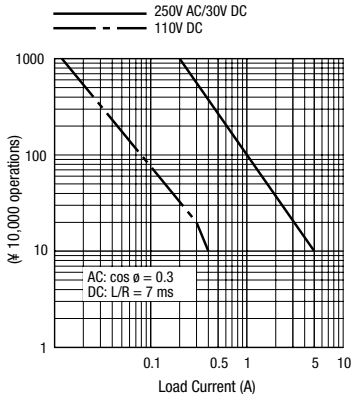

RU4 (Inductive Load)

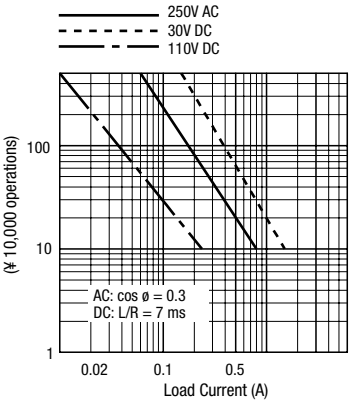

RU42 (Inductive Load)

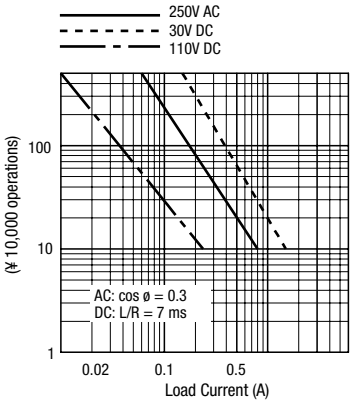

Maximum Switching Current

RU2

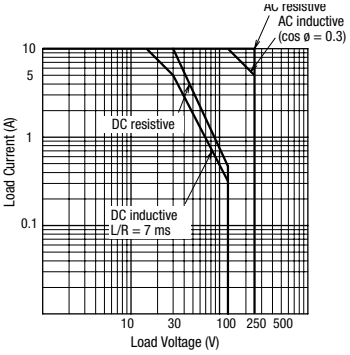

RU4

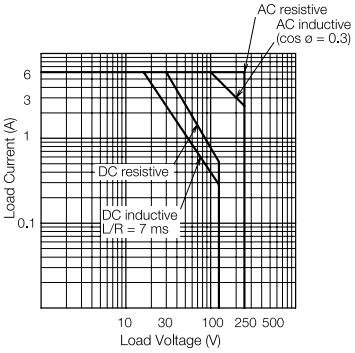

RU42 (Bifurcated)

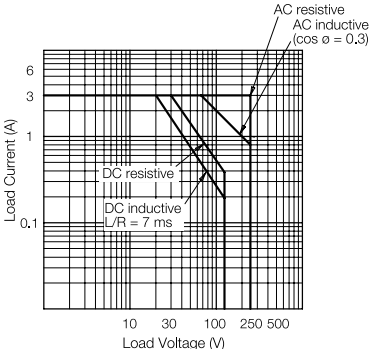

Ambient Temperature vs. Temperature Rise Curves

RU2 (AC Coil, 50 Hz)

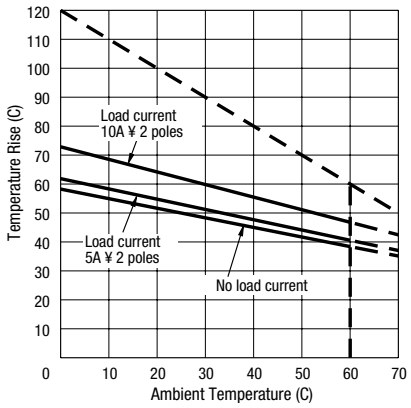

RU2 (AC Coil, 60 Hz)

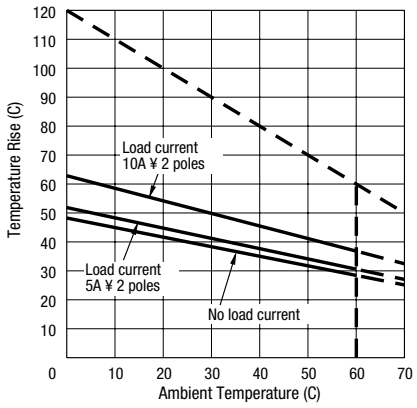

RU2 (DC Coil)

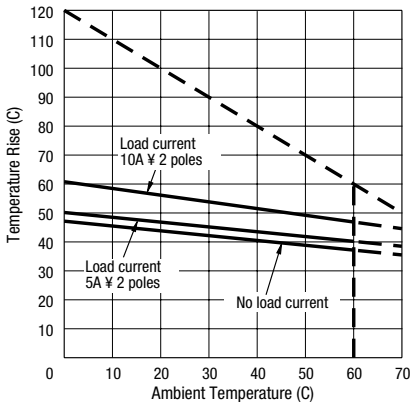

RU4/RU42 (AC Coil, 50 Hz)

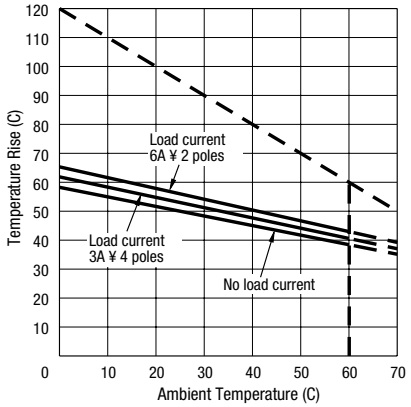

RU4/RU42 (AC Coil, 60 Hz)

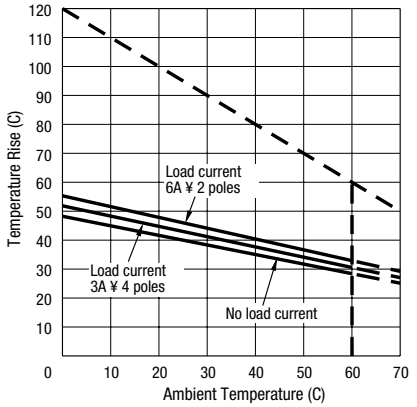

RU4/RU42 (DC Coil)

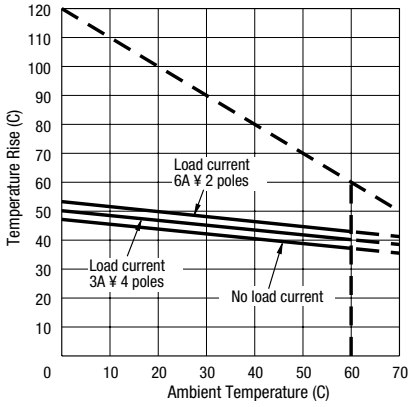

The above temperature rise curves show the characteristics when 100% the rated coil voltage is applied.
The heat resistance of the coil is 120°C. The slant dashed line indicates the allowable temperature rise for the coil at different ambient temperatures.
Load current 6A x 2 poles is for the RU4 models only.

Internal Connection (View from Bottom)

RU2S-* Standard

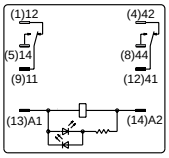

24V AC/DC coil or less

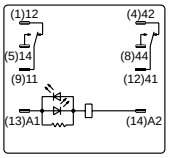

Over 24V AC/DC coil

RU2S-*R with RC

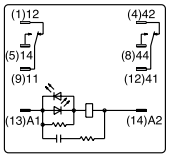

RU2S-*D With Diode

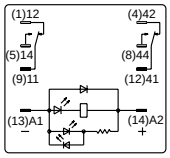

24V DC coil or less

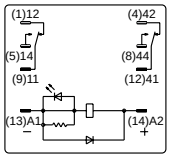

Over 24V DC coil

RU2V-NF-*

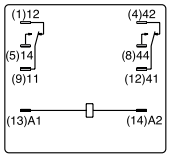

RU4S-*/RU42S-* Standard

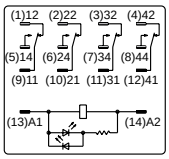

24V AC/DC coil or less

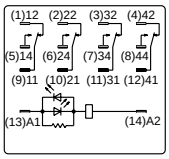

Over 24V AC/DC coil

RU4S-*R/RU42S-*R With RC

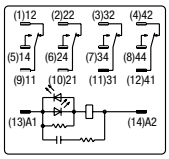

RU4S-*D/RU42S-*D With Diode

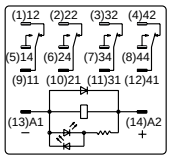

24V DC coil or less

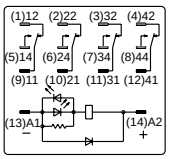

Over 24V DC coil

RU4V-NF-*/RU42V-NF-*

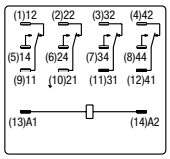

Dimensions (mm)

RU2S

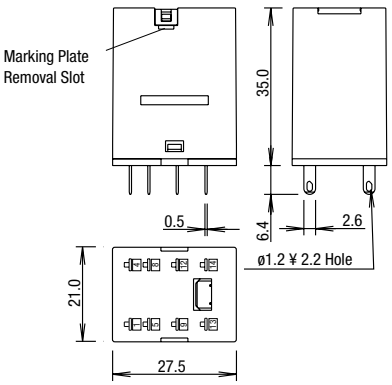

Marking plate removal slot is provided only on one side. Insert a flat screwdriver into the slot to remove the marking plate.

RU2V

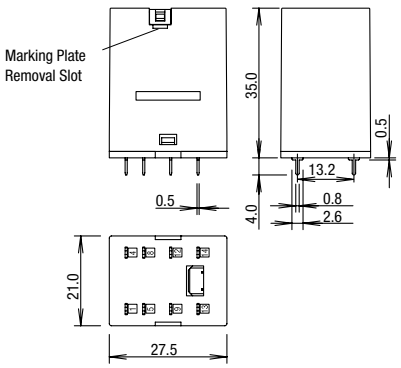

Mounting Hole Layout

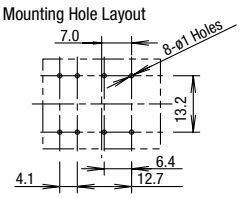

All dimensions in mm.

Dimensions con't (mm)

RU4S/RU42S

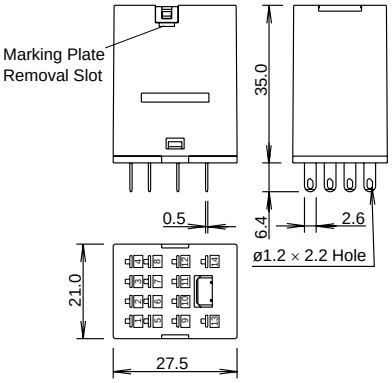

Marking plate removal slot is provided only on one side.
Insert a flat screwdriver into the slot to remove the marking plate.

RU4V/RU42V

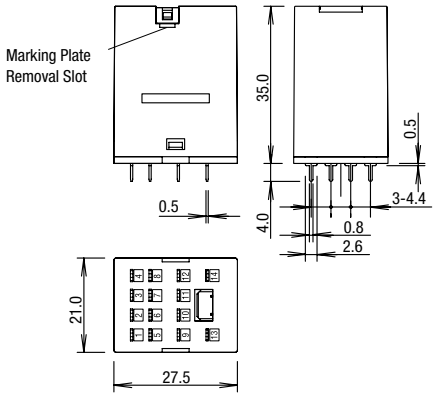

Mounting Hole Layout

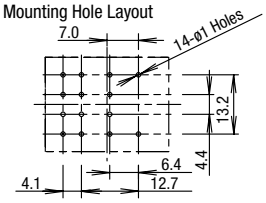

All dimensions in mm.

Spring Clamp DIN Rail Mount Sockets

SU2S-11L

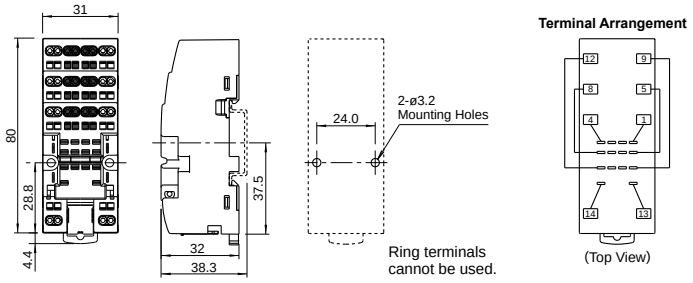

SU4S-11L

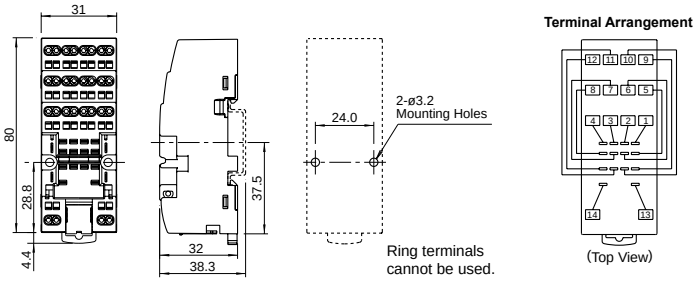

Standard DIN Rail Mount Sockets

SM2S-05

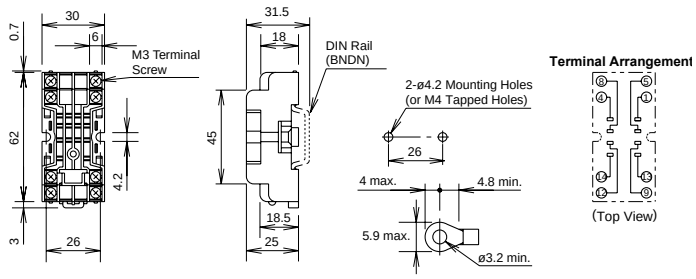

SY4S-05

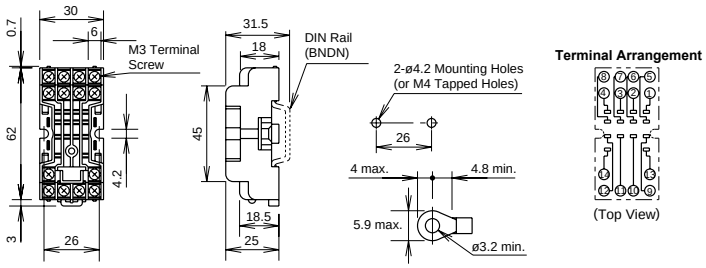

Dimensions con't (mm)

Finger-safe DIN Rail Mount Sockets

SM2S-05C

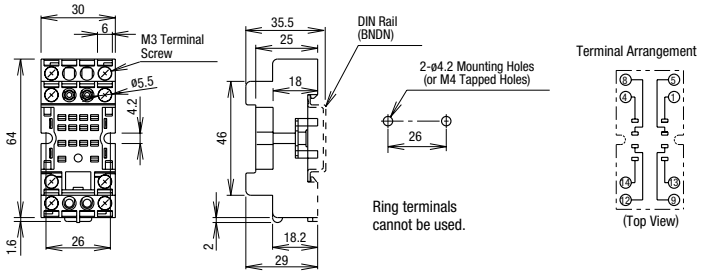

SY4S-05C

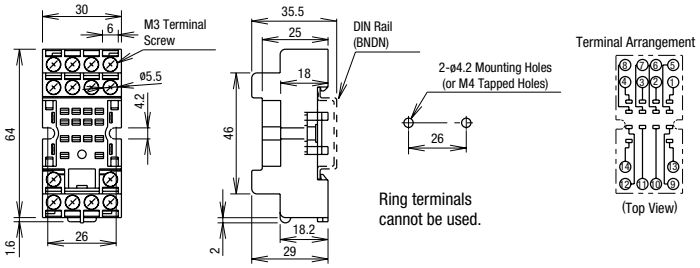

PCB Mount Sockets

SM2S-61

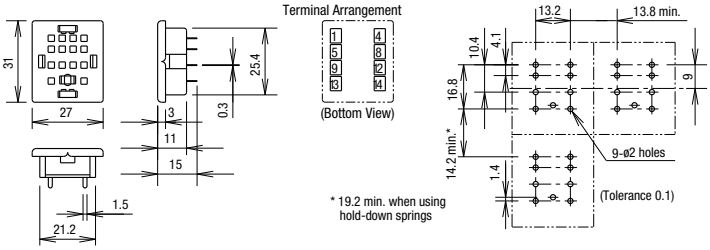

SM2S-62

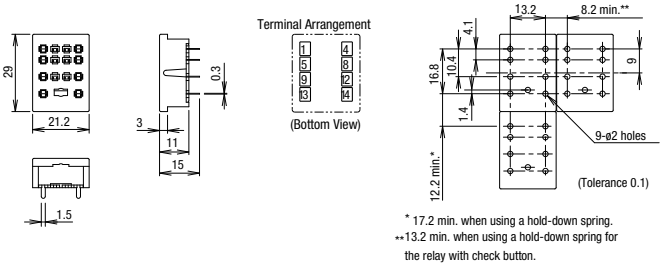

SY4S-61

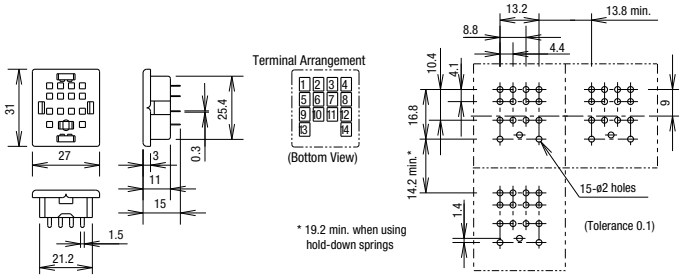

SY4S-62

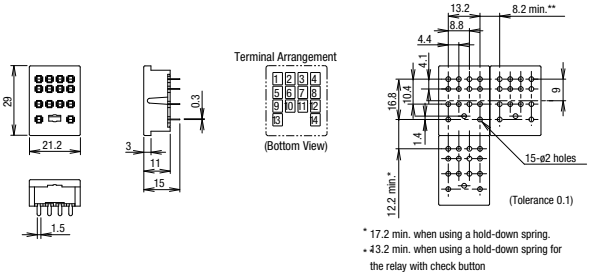

Through Panel Mount Socket

SY4S-51

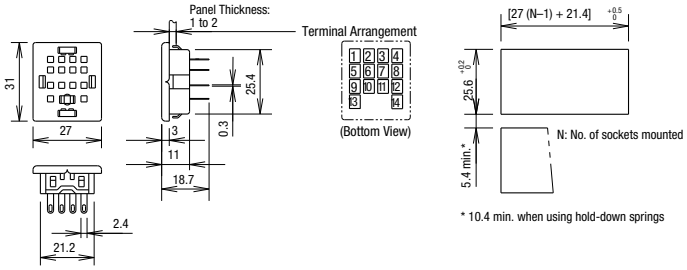

Operating Instructions

Driving Circuit for Relays

1. To ensure correct relay operation, apply rated voltage to the relay coil.

2. Input voltage for the DC coil:
   A complete DC voltage is best for the coil power to make sure of stable relay operation. When using a power supply containing a ripple voltage, suppress the ripple factor within 5%. When power is supplied through a rectification circuit, the relay operating characteristics, such as pickup voltage and dropout voltage, depend on the ripple factor. Connect a smoothing capacitor for better operating characteristics as shown below.

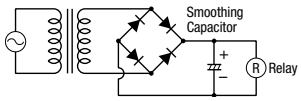

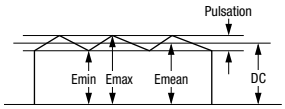

Ripple Factor (%) $\frac{\text{Emax} - \text{Emin}}{\text{Emean}}$ ¥ 100%

Emax = Maximum of pulsating current
Emin = Minimum of pulsating current
Emean = DC mean value

3. Leakage current while relay is off:
   When driving an element at the same time as the relay operation, special consideration is needed for the circuit design. As shown in the incorrect circuit below, leakage current (Io) flows through the relay coil while the relay is off. Leakage current causes coil release failure or adversely affects the vibration resistance and shock resistance. Design a circuit as shown in the correct example.

Incorrect

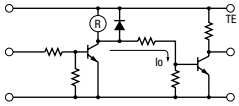

Correct

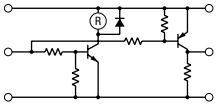

4. Surge suppression for transistor driving circuits:
   When the relay coil is turned off, a high-voltage pulse is generated, causing a transistor to deteriorate and sometimes to break. Be sure to connect a diode to suppress the back electromotive force. Then, the coil release time becomes slightly longer. To shorten the coil release time, connect a Zener diode between the collector and emitter of the transistor. Select a Zener diode with a Zener voltage slightly higher than the power voltage.

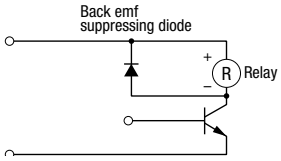

Protection for Relay Contacts

1. The contact ratings show maximum values. Make sure that these values are not exceeded. When an inrush current flows through the load, the contact may become welded. If this is the case, connect a contact protection circuit, such as a current limiting resistor.

2. Contact protection circuit:
   When switching an inductive load, arcing causes carbides to form on the contacts, resulting in increased contact resistance. In consideration of contact reliability, contact life, and noise suppression, use of a surge absorbing circuit is recommended. Note that the release time of the load becomes slightly longer. Check the operation using the actual load. Incorrect use of a contact protection circuit will adversely affect switching characteristics. Four typical examples of contact protection circuits are shown in the following table:

RC	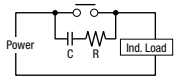	This protection circuit can be used when the load impedance is smaller than the RC impedance in an AC load power circuit. • R: Resistor of approximately the same resistance value as the load • C:0.1 to 1 µF
	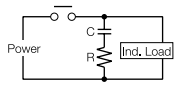	This protection circuit can be used for both AC and DC load power circuits. R: Resistor of approximately the same resistance value as the load C: 0.1 to 1 µF
Diode	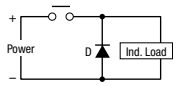	This protection circuit can be used for DC load power circuits. Use a diode with the following ratings. Reverse withstand voltage: Power voltage of the load circuit x 10 Forward current: More than the load current
Varistor	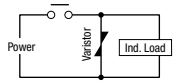	This protection circuit can be used for both AC and DC load power circuits. For a best result, when using a power voltage of 24 to 48V AC/DC, connect a varistor across the load. When using a power voltage of 100 to 240V AC/DC, connect a varistor across the contacts.

3. Do not use a contact protection circuit as shown below:

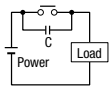	This protection circuit is very effective in arc suppression when opening the contacts. But, the capacitor is charged while the contacts are opened. When the contacts are closed, the capacitor is discharged through the contacts, increasing the possibility of contact welding.
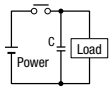	This protection circuit is very effective in arc suppression when opening the contacts. But, when the contacts are closed, a current flows to charge the capacitor, causing contact welding.

Generally, switching a DC inductive load is more difficult than switching a DC resistive load. Using an appropriate arc suppressor, however, will improve the switching characteristics of a DC inductive load.

Soldering

1. When soldering the relay terminals, use a soldering iron of 30 to 60W, and quickly complete soldering (within approximately 3 seconds).

2. Use a non-corrosive rosin flux.

Operating Instructions con't

Other Precautions

1. General notice:
   To maintain the initial characteristics, do not drop or shock the relay.

   The relay cover cannot be removed from the base during normal operation. To maintain the initial characteristics, do not remove the relay cover.

   Use the relay in environments free from condensation, dust, sulfur dioxide (SO_2), and hydrogen sulfide (H_2S).

   Make sure that the coil voltage does not exceed applicable coil voltage range.
2. UL and CSA ratings may differ from product rated values determined by IDEC.
3. Do not use relays in the vicinity of strong magnetic field, as this may affect relay operation.

Safety Precautions

- Turn off the power to the relay before starting installation, removal, wiring, maintenance, and inspection of the relays. Failure to turn power off may cause electrical shock or fire hazard.
- Observe specifications and rated values, otherwise electrical shock or fire hazard may be caused.
- Use wires of the proper size to meet voltage and current requirements. Tighten the terminal screws on the relay socket to the proper tightening torque.
- Surge absorbing elements on AC relays with RC or DC relays with diode are provided to absorb the back electromotive force generated by the coil. When the relay is subject to an excessive external surge voltage, the surge absorbing element may be damaged. Add another surge absorbing provision to the relay to prevent damage.

Precautions for the RU Relays

- Before operating the latching lever of the RU relay, turn off the power to the RU relay. After checking the circuit, return the latching lever to the original position.
- Do not use the latching lever as a switch. The durability of the latching lever is a minimum of 100 operations.
- When using DC loads on 4PDT relays, apply a positive voltage to terminals of neighboring poles and a negative voltage to the other terminals of neighboring poles to prevent the possibility of short circuits.
- DC relays with a diode have a polarity in the coil terminals. Apply the DC voltage to the correct terminals.

RY/RM Series Miniature Relays

Key features:

- RY2 (3A), RY4 (5A), RM2 (5A)
- General purpose miniature relays
- 3A or 5A contact capacity
- Wide variety of terminal styles and coil voltages meet a wide range of applications
- All 4PDT types have arc barriers.

Part Number Selection

Contact	Model	Part Number: Plug-in Terminal	Part Number: PC Board Terminal	Coil Voltage Code
DPDT (Slim) 3A	Standard	RY2S-U □	RY2V-U □	AC6V, AC12V, AC24V, AC110V, AC120V, AC220V, AC240V DC6V, DC12V, D24V, DC48V, DC110V
	With Indicator	RY2S-UL □	RY2V-UL □	
	With Check Button	RY2S-UC □	—	
	With Indicator and Check Button	RY2S-ULC □		
	Top Bracket Mounting	RY2S-UT □		
	With Diode (DC coil only)	RY2S-UD □	RY2V-UD □	DC6V, DC12V, DC24V, DC48V, DC110V
DPDT (Wide) 5A	Standard	RM2S-U □	RM2V-U □	RYAC6V, AC12V, AC24V, AC110-120V, AC220-240V DC6V, DC12V, DC24V, DC48V, DC100-110V
	With Indicator	RM2S-UL □	RM2V-UL □	
	With Check Button	RM2S-UC □	—	
	With Indicator and Check Button	RM2S-ULC □		
	Top Bracket Mounting	RM2S-UT □		
	With Diode (DC coil only)	RM2S-UD □		DC6V, DC12V, DC24V, DC48V, DC100-110V
	With Indicator and Diode (DC coil only)	RM2S-ULD □		
4PDT 5A	Standard	RY4S-U □	RY4V-U □	AC6V, AC12V, AC24V, AC110-120V, AC220-240V DC6V, DC12V, DC24V, DC48V, DC100-110V
	With Indicator	RY4S-UL □	RY4V-UL □	
	With Check Button	RY4S-UC □	—	
	With Indicator and Check Button	RY4S-ULC □		
	Top Bracket Mounting	RY4S-UT □		
	With Diode (DC coil only)	RY4S-UD □		DC6V, DC12V, DC24V, DC48V, DC100-110V
	With Indicator and Diode (DC coil only)	RY4S-ULD □		

Top mount models are designed to mount directly to a panel and do not require a socket.

Ordering Information

When ordering, specify the Part No. and coil voltage code:

(example) **RY4S-U** **AC110-120V**

Part No. — Coil Voltage Code

Sockets

Relays	Standard DIN Rail Mount	Finger-safe DIN Rail Mount	Through Panel Mount	PCB Mount
RY2S	SY2S-05	SY2S-05C	SY2S-51	SY2S-61
RM2	SM2S-05	SM2S-05C	SM2S-51	SY4S-61 SY4S-62
RY4S	SY4S-05	SY4S-05C	SY4S-51	

Hold Down Springs & Clips

Appearance	Item	Relay	For DIN Mount Socket	For Through Panel & PCB Mount Socket
	Pullover Wire Spring	RY2S	SY2S-02F1	SY4S-51F1
		RM2	SY4S-51F1	SY4S-51F1
		RY4S		
	Leaf Spring [1] (side latch)	RY2S	SFA-202 [2]	SFA-302
		RM2, RY4S		
	Leaf Spring [1] (top latch)	RY2S	SFA-101 [2]	SFA-301
		RM2		
		RY4S		

1. Not available for PCB mount socket SY4S-62.
2. Order 2 pieces per relay.

Accessories

Item	Appearance	Use with	Part No.	Remarks
Aluminum DIN Rail (1 meter length)		All DIN rail sockets	BNDN1000	The BNDN1000 is designed to accommodate DIN mount sockets. Made of durable extruded aluminum, the BNDN1000 measures 0.413 (10.5mm) in height and 1.37 (35mm) in width (DIN standard). Standard length is 39" (1,000mm).
DIN Rail End Stop		DIN rail	BNL5	9.1 mm wide.
Replacement Hold-Down Spring Anchor		Horseshoe clip for all DIN rail sockets	Y778-011	For use on DIN rail mount socket when using pullover wire hold down spring. 2 pieces included with each socket.

Specifications

Contact Model	Standard Contact		
	RY2 - DPDT Slim	RM2 - DPDT Wide	RY4 - 4PDT
Contact Material	Gold-plated silver	Silver	Gold-plated silver
Contact Resistance [1]	50 mΩ maximum	30 mΩ maximum	50 mΩ maximum
Minimum Applicable Load	24V DC, 5 mA; 5V DC, 10 mA (reference value)	24V DC, 10 mA; 5V DC, 20 mA (reference value)	24V DC, 5 mA; 5V DC, 10 mA (reference value)
Operating Time [2]	20 ms maximum		
Release Time [2]	20 ms maximum		
Power Consumption (approx.)	AC: 1.1 VA (50 Hz), 1 VA (60 Hz) DC: 0.8W	AC: 1.4 VA (50 Hz), 1.2 VA (60 Hz) DC: 0.9W	AC: 1.4 VA (50 Hz), 1.2 VA (60 Hz) DC: 0.9W
Insulation Resistance	100 MΩ minimum (500V DC megger)		
Dielectric Strength	Between live and dead parts:		
	1500V AC, 1 minute	2000V AC, 1 minute	2000V AC, 1 minute
	Between contact and coil:		
	1500V AC, 1 minute	2000V AC, 1 minute	2000V AC, 1 minute
	Between contacts of different poles:		
	1500V AC, 1 minute	2000V AC, 1 minute	2000V AC, 1 minute
	Between contacts of the same pole:		
	1000V AC, 1 minute	1000V AC, 1 minute	1000V AC, 1 minute
Operating Frequency	Electrical: 1800 operations/h maximum Mechanical: 18,000 operations/h maximum		
Vibration Resistance	Damage limits: 10 to 55 Hz, amplitude 0.5 mm Operating extremes: 10 to 55 Hz, amplitude 0.5 mm		
Shock Resistance	Damage limits: 1000 m/s^2 Operating extremes: 100 m/s^2 (DPDT Slim), 200 m/s^2 (4PDT, DPDT Wide)		
Mechanical Life	50,000,000 operations		
Electrical Life	200,000 operations (220V AC, 3A)	500,000 operations (220V AC, 5A)	100,000 operations (220V AC, 5A) 200,000 operations (220V AC, 3A)
Operating Temperature [3]	–25 to +55°C (no freezing)	–25 to +45°C (no freezing)	–25 to +55°C (no freezing) [4]
Operating Humidity	45 to 85% RH (no condensation)		
Weight (approx.)	23g	35g	34g

Note: Above values are initial values.
1. Measured using 5V DC, 1A voltage drop method
2. Measured at the rated voltage (at 20°C), excluding contact bouncing
   Release time of relays with diode: 40 ms maximum
3. For use under different temperature conditions, refer to Continuous Load Current vs. Operating Temperature Curve. The operating temperature range of relays with indicator or diode is –25 to +40°C.
4. When the total current of 4 contacts is less than 15A, the operating temperature range is –25 to +70°C.

AC Coil Ratings

Voltage (V)	Rated Current (mA) ±15% at 20°C				Coil Resistance (Ω) ±10% at 20°C		Operation Characteristics (against rated values at 20°C)		
	AC 50Hz		AC 60Hz						
	DPDT Slim	DPDT Wide & 4PDT	DPDT Slim	DPDT Wide & 4PDT	DPDT Slim	DPDT Wide & 4PDT	Max. Continuous Applied Voltage	Pickup Voltage	Dropout Voltage
6	170	240	150	200	18.8	9.4	110%	80% maximum	30% minimum
12	86	121	75	100	76.8	39.3			
24	42	60.5	37	50	300	153			
110	9.6	—	8.4	—	6,950	—			
110-120	—	9.4-10.8	—	8.0-9.2	—	4,290			
120	8.6	—	7.5	—	8,100	—			
220	4.7	—	4.1	—	25,892	—			
220-240	—	4.7-5.4	—	4.0-4.6	—	18,820			
240	4.9	—	4.3	—	26,710	—			

DC Coil Ratings

Voltage (V)	Rated Current (mA) ±15% at 20°C		Coil Resistance (Ω) ±10% at 20°C		Operation Characteristics (against rated values at 20°C)		
	DPDT Slim	DPDT Wide & 4PDT	DPDT Slim	DPDT Wide & 4PDT	Max. Continuous Applied Voltage	Pickup Voltage	Dropout Voltage
6	128	150	47	40	110%	80% maximum	10% minimum
12	64	75	188	160			
24	32	36.9	750	650			
48	18	18.5	2,660	2,600			
100-110	—	8.2-9.0	—	12,250			
110	8	—	13,800	—			

Contact Ratings

Maximum Contact Capacity						
Contact	Continuous Current	Allowable Contact Power		Rated Load		
		Resistive Load	Inductive Load	Voltage (V)	Res. Load	Ind. Load
DPDT Slim (RY2)	3A	660 VA AC 90W DC	176 VA AC 45W DC	110V AC	3A	1.5A
				220V AC	3A	0.8A
				30V DC	3A	1.5A
DPDT Wide (RM2)	5A	1100VA AC 150W DC	440VA AC 75W DC	110V AC	5A	2.5A
				220V AC	5A	2A
				30V DC	5A	2.5A
4PDT (RY4)	5A	1200 VA AC 150W DC	288 VA AC 60W DC	240V AC	5A	1.2A
				30V DC	5A	2A

Note: Inductive load for the rated load — cos ø = 0.3, L/R = 7 ms

TÜV Ratings

Voltage	DPDT Slim	DPDT Wide	4PDT
240V AC	3A	5A	5A
30V DC	3A	5A	5A

AC: cos ø = 1.0, DC: L/R = 0 ms

UL Ratings

Voltage	Resistive			General use		
	DPDT Slim	DPDT Wide	4PDT	DPDT Slim	DPDT Wide	4PDT
240V AC	3A	5A	5A	0.8A	2A	5A
120V AC	—	—	—	1.5A	2.5A	—
100V DC	0.2A	0.4A	0.2A	0.2A	—	0.2A
30V DC	3A	5A	5A	3A	—	5A

CSA Ratings

Voltage	Resistive			General use		
	DPDT Slim	DPDT Wide	4PDT	DPDT Slim	DPDT Wide	4PDT
240V AC	3A	5A	5A	0.8A	2A	5A
120V AC	3A	5A	—	1.5A	2.5A	—
100V DC	—	—	—	0.2A	0.4A	0.2A
30V DC	3A	5A	5A	1.5A	2.5A	1.5A

Socket Specifications

	Sockets	Terminal	Electrical Rating	Wire Size	Torque
DIN Rail Mount Sockets	SY2S-05	M3 screws with captive wire clamp	300V, 7A	Maximum up to 2–#14AWG	5.5 - 9 in•lbs
	SM2S-05	M3 screw with captive wire clamp	300V, 10A	Maximum up to 2–#14AWG	5.5 - 9 in•lbs
	SY4S-05	M3 screw with captive wire clamp	300V, 7A*	Maximum up to 2–#14AWG	5.5 - 9 in•lbs
Finger-safe DIN Rail Mount	SY2S-05C	M3 screws with captive wire clamp, fingersafe	300V, 7A	Maximum up to 2–#14AWG	5.5 - 9 in•lbs
	SM2S-05C	M3 screw with captive wire clamp, fingersafe	300V, 10A	Maximum up to 2–#14AWG	5.5 - 9 in•lbs
	SY4S-05C	M3 screw with captive wire clamp, fingersafe	300V, 7A*	Maximum up to 2–#14AWG	5.5 - 9 in•lbs
Through Panel Mount Socket	SY2S-51	Solder	250V, 7A	—	—
	SM2S-51	Solder	250V, 10A	—	—
	SY4S-51	Solder	250V, 7A*	—	—
PCB Mount Socket	SY2S-61	PCB Mount	300V, 7A	—	—
	SY4S-61	PCB Mount	300V, 7A	—	—
	SY4S-62	PCB Mount	250V, 7A	—	—

* When using only 2 poles of the 4-poles, the UL recognized current is 10A.

Characteristics (Reference Data)

Electrical Life Curves

AC Load

(RY2)

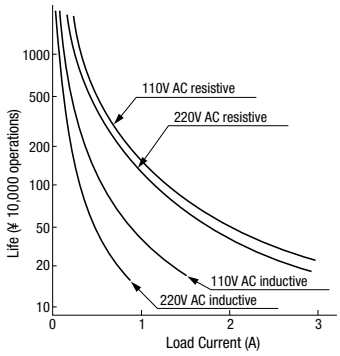

(RY4)

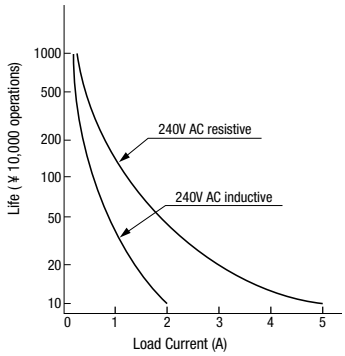

(RM2)

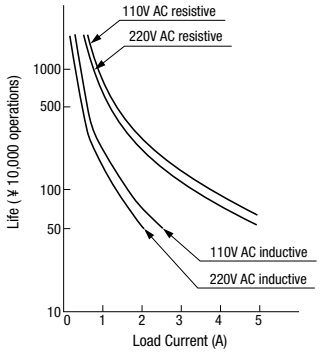

DC Load

(RY2)

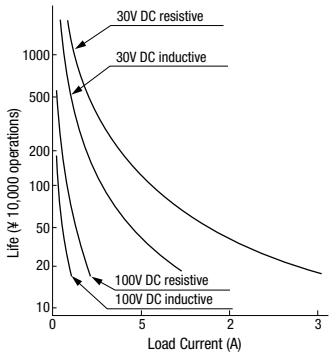

(RY4)

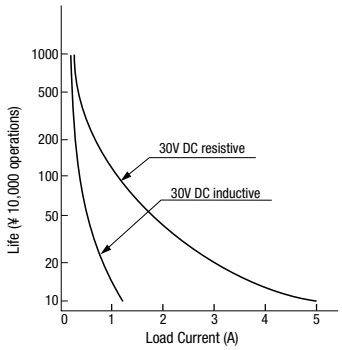

(RM2)

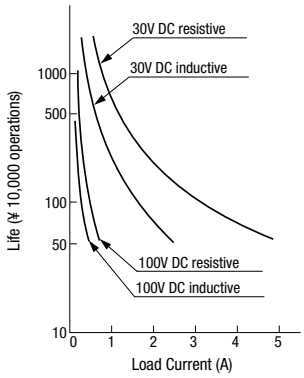

Maximum Switching Capacity

(RY2)

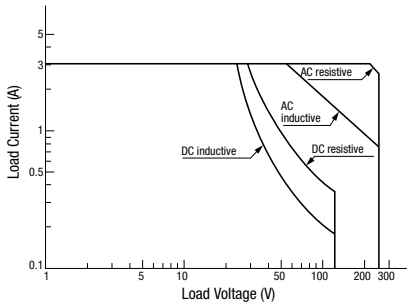

(RY4)

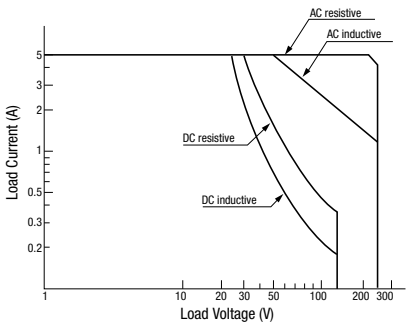

(RM2)

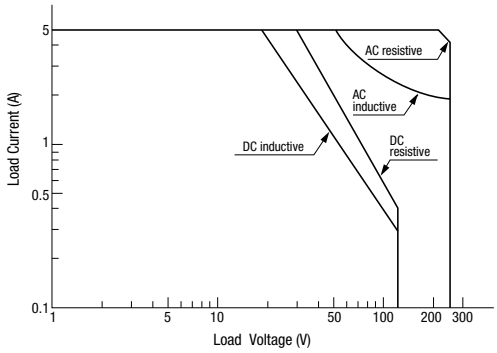

Continuous Load Current vs. Operating Temperature Curve (Standard Type, With Check Button, and Top Bracket Mounting Type)

(RY2)

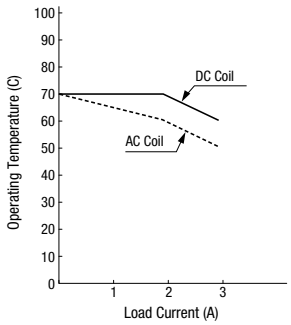

(RY4)

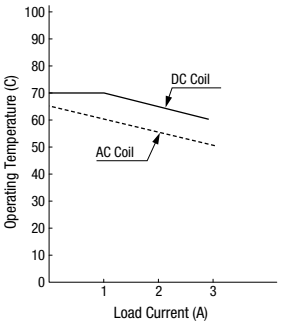

(RM2)

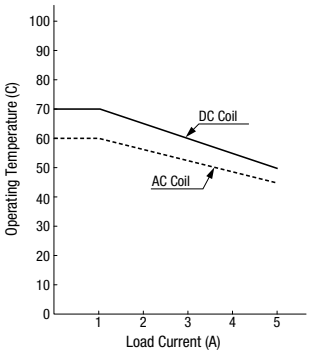

Internal Connection (View from Bottom)

Standard Type

DPDT Slim (RY2)	DPDT Wide (RM2)	4PDT (RY4)	With Check Button
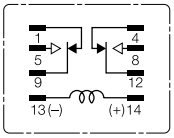	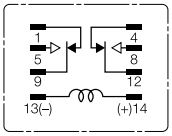	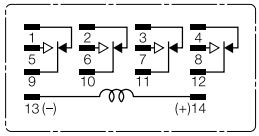	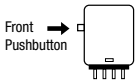 Contacts can be operated by pressing the check button.

With Indicator (-L type)

	DPDT Slim (RY2)		DPDT Wide (RM2)		4PDT (RY4)	
Coil Below 100V AC/DC	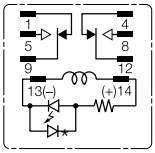	Coil Below 24V AC/DC	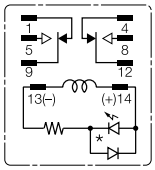		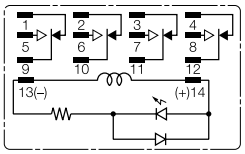	When the relay is energized, the indicator goes on. • An LED protection diode is not contained in DPDT relays for coils below 100V DC. • If coil polarity is reversed LED will not light.
Coil 100V AC/DC and over	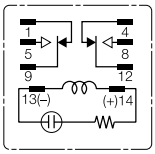	Coil 24V AC/DC and over	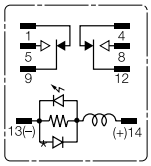		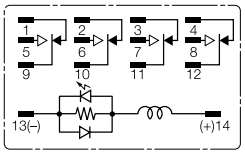	

With Diode (-D type)

DPDT Slim (RY2)	DPDT Wide (RM2)	4PDT (RY4)	
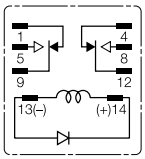	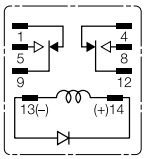	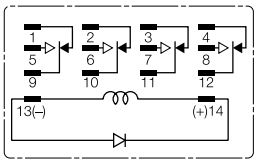	Contains a diode to absorb the back emf generated when the coil is de-energized. The release time is slightly longer. • Diode Characteristics Reverse withstand voltage: 1,000V Forward current: 1A

With Indicator and Diode (-LD type)

	DPDT Wide (RM2)	4PDT (RY4)		DPDT Wide (RM2)	4PDT (RY4)	
Coil Below 24V DC	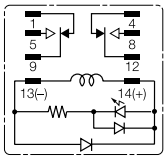	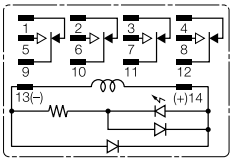	Coil 24V DC and over	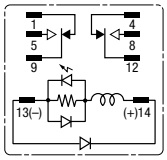	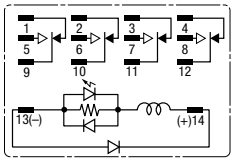	Contains an LED indicator and a surge absorber.

Dimensions (mm)

RY2S

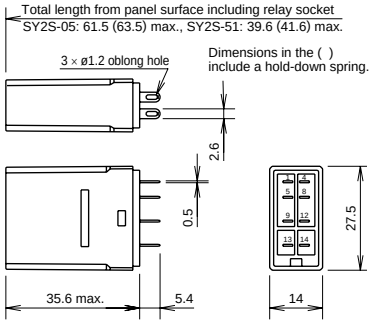

RY4S

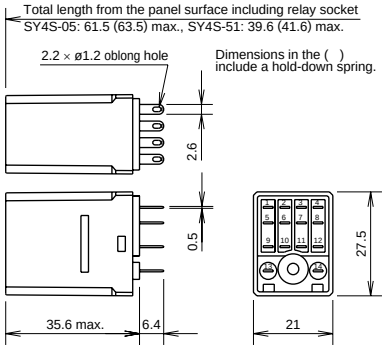

RM2S

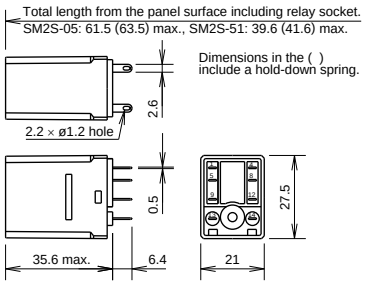

RY2V

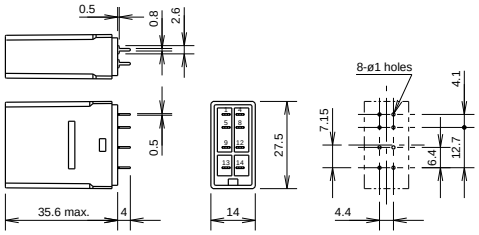

RY4V

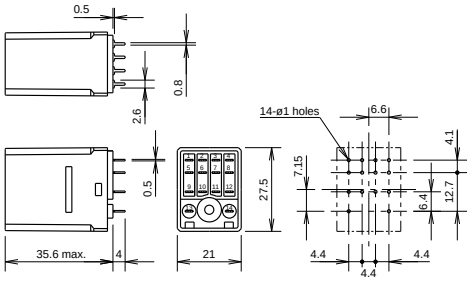

RM2V

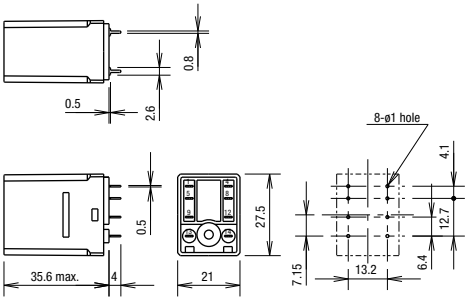

RY2S-UT

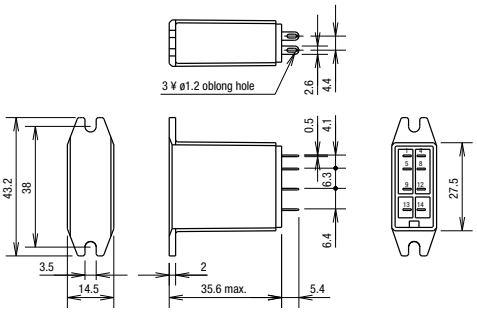

RY4S-UT

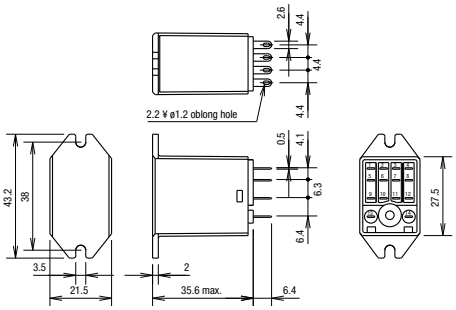

RM2S-UT

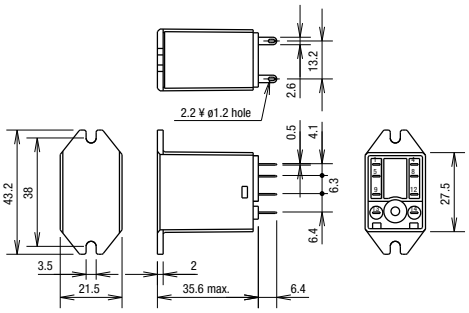

Dimensions

Standard DIN Rail Mount Sockets

SY2S-05

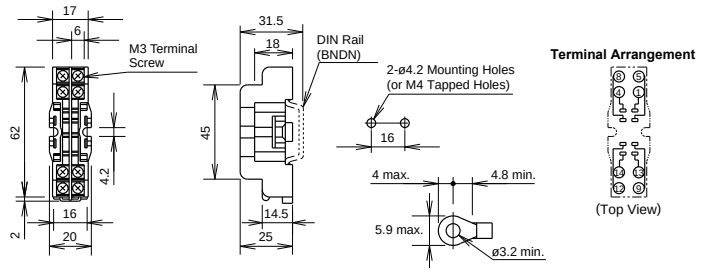

SM2S-05

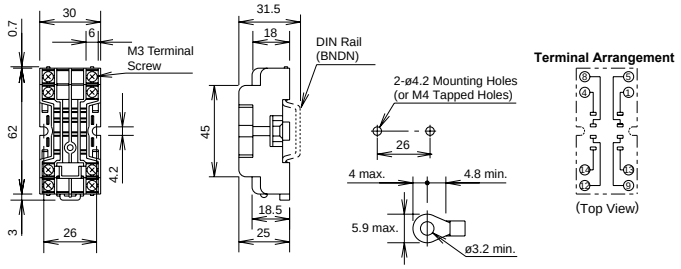

SY4S-05

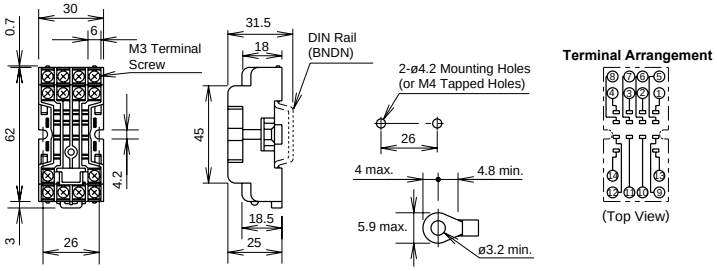

Finger-safe DIN Rail Mount Sockets

SY2S-05C

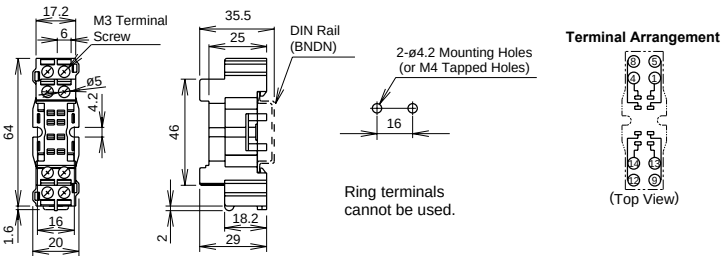

SM2S-05C

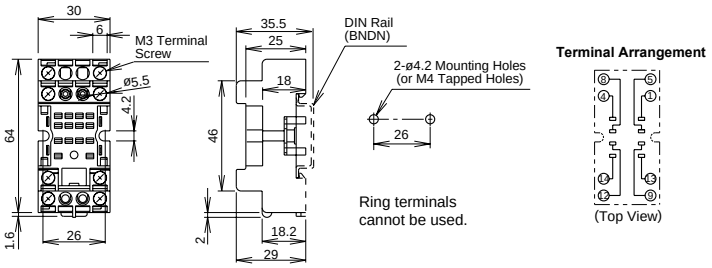

SY4S-05C

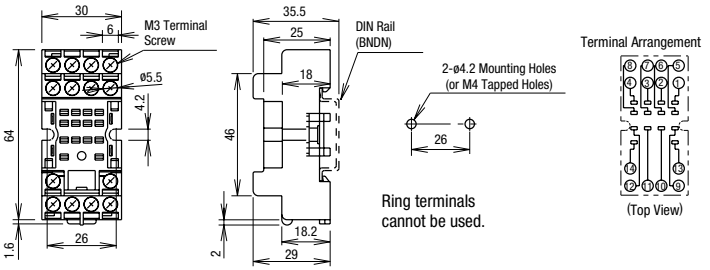

Through Panel Mount Socket

SY2S-51

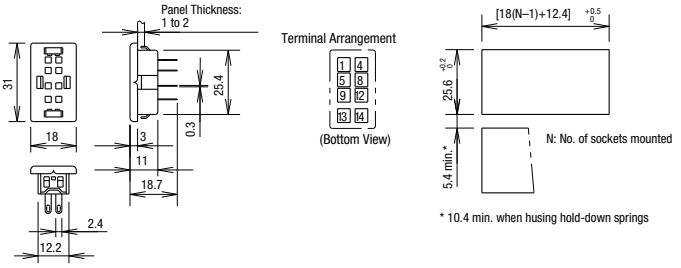

SM2S-51

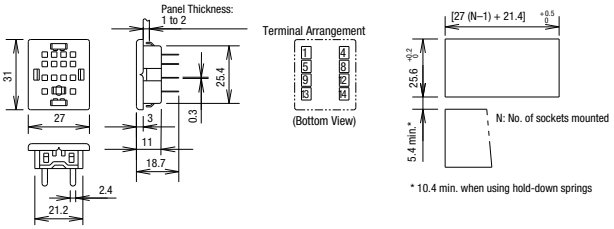

SY4S-51

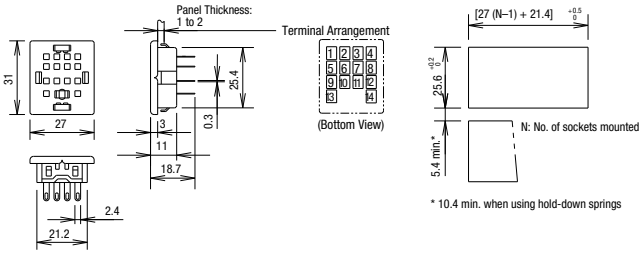

PCB Mount Sockets

SY2S-61

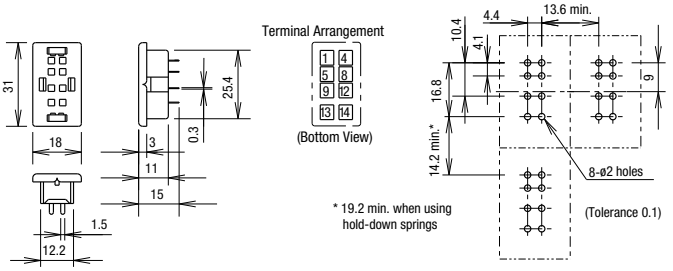

SY4S-61

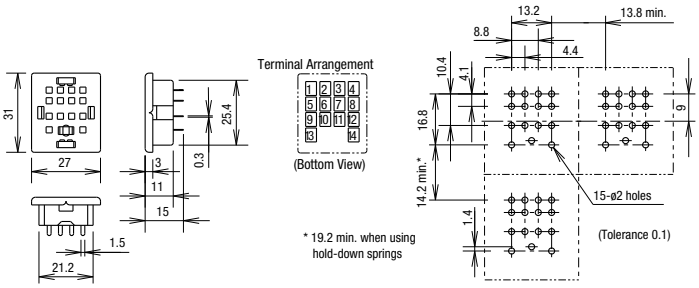

SY4S-62

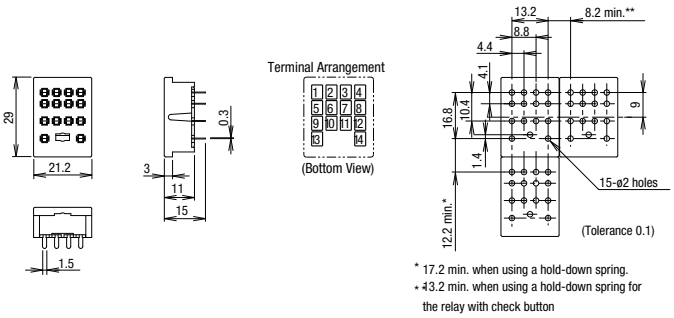

Operating Instructions

Driving Circuit for Relays

1. To ensure correct relay operation, apply rated voltage to the relay coil.

2. Input voltage for the DC coil:
   A complete DC voltage is best for the coil power to make sure of stable relay operation. When using a power supply containing a ripple voltage, suppress the ripple factor within 5%. When power is supplied through a rectification circuit, the relay operating characteristics, such as pickup voltage and dropout voltage, depend on the ripple factor. Connect a smoothing capacitor for better operating characteristics as shown below.

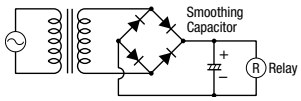

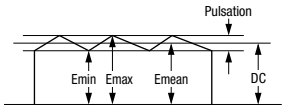

Ripple Factor (%) $\frac{\text{Emax} - \text{Emin}}{\text{Emean}}$ ¥ 100%

Emax = Maximum of pulsating current
Emin = Minimum of pulsating current
Emean = DC mean value

3. Leakage current while relay is off:
   When driving an element at the same time as the relay operation, special consideration is needed for the circuit design. As shown in the incorrect circuit below, leakage current (Io) flows through the relay coil while the relay is off. Leakage current causes coil release failure or adversely affects the vibration resistance and shock resistance. Design a circuit as shown in the correct example.

Incorrect

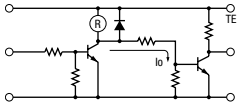

Correct

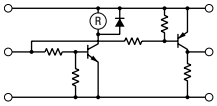

4. Surge suppression for transistor driving circuits:
   When the relay coil is turned off, a high-voltage pulse is generated, causing a transistor to deteriorate and sometimes to break. Be sure to connect a diode to suppress the back electromotive force. Then, the coil release time becomes slightly longer. To shorten the coil release time, connect a Zener diode between the collector and emitter of the transistor. Select a Zener diode with a Zener voltage slightly higher than the power voltage.

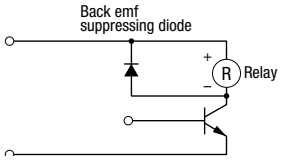

Protection for Relay Contacts

1. The contact ratings show maximum values. Make sure that these values are not exceeded. When an inrush current flows through the load, the contact may become welded. If this is the case, connect a contact protection circuit, such as a current limiting resistor.

2. Contact protection circuit:
   When switching an inductive load, arcing causes carbides to form on the contacts, resulting in increased contact resistance. In consideration of contact reliability, contact life, and noise suppression, use of a surge absorbing circuit is recommended. Note that the release time of the load becomes slightly longer. Check the operation using the actual load. Incorrect use of a contact protection circuit will adversely affect switching characteristics. Four typical examples of contact protection circuits are shown in the following table:

RC	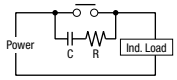	This protection circuit can be used when the load impedance is smaller than the RC impedance in an AC load power circuit. • R: Resistor of approximately the same resistance value as the load • C:0.1 to 1 µF
	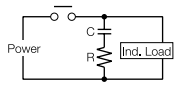	This protection circuit can be used for both AC and DC load power circuits. R: Resistor of approximately the same resistance value as the load C: 0.1 to 1 µF
Diode	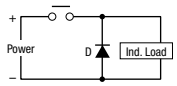	This protection circuit can be used for DC load power circuits. Use a diode with the following ratings. Reverse withstand voltage: Power voltage of the load circuit x 10 Forward current: More than the load current
Varistor	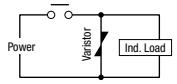	This protection circuit can be used for both AC and DC load power circuits. For a best result, when using a power voltage of 24 to 48V AC/DC, connect a varistor across the load. When using a power voltage of 100 to 240V AC/DC, connect a varistor across the contacts.

3. Do not use a contact protection circuit as shown below:

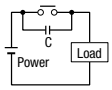	This protection circuit is very effective in arc suppression when opening the contacts. But, the capacitor is charged while the contacts are opened. When the contacts are closed, the capacitor is discharged through the contacts, increasing the possibility of contact welding.
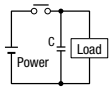	This protection circuit is very effective in arc suppression when opening the contacts. But, when the contacts are closed, a current flows to charge the capacitor, causing contact welding.

Generally, switching a DC inductive load is more difficult than switching a DC resistive load. Using an appropriate arc suppressor, however, will improve the switching characteristics of a DC inductive load.

Soldering

1. When soldering the relay terminals, use a soldering iron of 30 to 60W, and quickly complete soldering (within approximately 3 seconds).

2. Use a non-corrosive rosin flux.

Operating Instructions con't

Other Precautions

1. General notice:
   To maintain the initial characteristics, do not drop or shock the relay.

   The relay cover cannot be removed from the base during normal operation. To maintain the initial characteristics, do not remove the relay cover.

   Use the relay in environments free from condensation, dust, sulfur dioxide (SO_2), and hydrogen sulfide (H_2S).

   Make sure that the coil voltage does not exceed applicable coil voltage range.
2. UL and CSA ratings may differ from product rated values determined by IDEC.
3. Do not use relays in the vicinity of strong magnetic field, as this may affect relay operation.

Safety Precautions

- Turn off the power to the relay before starting installation, removal, wiring, maintenance, and inspection of the relays. Failure to turn power off may cause electrical shock or fire hazard.
- Observe specifications and rated values, otherwise electrical shock or fire hazard may be caused.
- Use wires of the proper size to meet voltage and current requirements. Tighten the terminal screws on the relay socket to the proper tightening torque.
- Surge absorbing elements on AC relays with RC or DC relays with diode are provided to absorb the back electromotive force generated by the coil. When the relay is subject to an excessive external surge voltage, the surge absorbing element may be damaged. Add another surge absorbing provision to the relay to prevent damage.

Precautions for the RU Relays

- Before operating the latching lever of the RU relay, turn off the power to the RU relay. After checking the circuit, return the latching lever to the original position.
- Do not use the latching lever as a switch. The durability of the latching lever is a minimum of 100 operations.
- When using DC loads on 4PDT relays, apply a positive voltage to terminals of neighboring poles and a negative voltage to the other terminals of neighboring poles to prevent the possibility of short circuits.
- DC relays with a diode have a polarity in the coil terminals. Apply the DC voltage to the correct terminals.

Industrial Ethernet Switch - FL SWITCH LM 8TX - 2832632

Please be informed that the data shown in this PDF Document is generated from our Online Catalog. Please find the complete data in the user's documentation. Our General Terms of Use for Downloads are valid
(http://download.phoenixcontact.com)

Ethernet Lean Managed Switch with eight 10/100 Mbps RJ45 ports

Product description

The compact Lean Managed Switches (LM) enable the flexible and cost-effective creation of managed Ethernet networks in automation applications. Thanks to the wide range of connection versions and the extended temperature range of -40°C to +70°C, it optimally meets the requirements of industrial applications. It supports PROFINET conformance class A. And its integrated software enables the redundant creation, diagnostics, and monitoring of networks using IT standard protocols.

Product Features

- Web-based management, SNMP
- Compact housing
- Comprehensive fiber optic versions
- Configuration can be stored externally
- -40°C ... +70°C ambient temperature
- Configurable alarm contact

Ethernet EtherNet/IP

Key commercial data

Packing unit	1 pc
Weight per Piece (excluding packing)	300.0 GRM
Custom tariff number	85176200
Country of origin	Germany

Technical data

Note:

Utilization restriction	EMC: class A product, see manufacturer's declaration in the download area

Dimensions

Width	45 mm
Height	99 mm

Industrial Ethernet Switch - FL SWITCH LM 8TX - 2832632

Technical data

Dimensions

Depth	112 mm

Ambient conditions

Degree of protection	IP20
Ambient temperature (operation)	-40 °C ... 70 °C
Ambient temperature (storage/transport)	-40 °C ... 85 °C
Permissible humidity (operation)	30 % ... 95 % (non-condensing)
Permissible humidity (storage/transport)	30 % ... 95 % (non-condensing)
Air pressure (operation)	80 kPa ... 108 kPa (2000 above sea level)
Air pressure (storage/transport)	70 kPa ... 108 kPa (3000 above sea level)
Noise immunity	EN 61000-6-2:2005

Interfaces

Interface 1	Ethernet (RJ45)
No. of ports	8 (RJ45 ports)
Connection method	RJ45
Note on connection method	Auto negotiation and autocrossing
Transmission physics	Copper
Transmission speed	10/100 MBit/s
Transmission length	100 m (per segment)
Interface 5	Serial (V.24 (RS-232))
Connection method	V.24 (RS-232-C), 6-pos. MINI-DIN socket (PS/2)

Function

Basic functions	Store-and-forward switch complies with IEEE 802.3 2, priority classes according to IEEE 802.1 P TCP/IP protocol, BootP-compatible, port mirroring, integrated web server function, multicast filtering, IGMP snooping, VLAN, Rapid Spanning Tree (RSTP), DHCP server, PTCP filter
Supported browsers	Internet Explorer 5.5 or higher
Redundancy	Rapid Spanning Tree 802.1w, Fast Ring Detection
Status and diagnostic indicators	Per Ethernet 2 status LEDs: LINK and status activity, 100, full duplex, supply voltage U_{S1} and U_{S2} (redundant supply voltage)

Network expansion parameters

Cascading depth	Network, linear, and star structure: any
Maximum conductor length ((twisted pair)	100 m

Supply voltage

Supply voltage	24 V DC
Residual ripple	3.6 V_{PP} (within the permitted voltage range)
Supply voltage range	18.5 V DC ... 30.5 V DC

Industrial Ethernet Switch - FL SWITCH LM 8TX - 2832632

Technical data

Supply voltage

Typical current consumption	520 mA (at U_S = 24 V DC)

General

Mounting type	DIN rail
Type AX	Block design
Weight	230 g
Noise emission	EN 61000-6-3/-4

Mechanical tests

Type of test	Vibration resistance in acc. with EN 60068-2-6/IEC 60068-2-6
Test result	Operation/Storage/Transport: 5 g, 150 Hz, Criterion 3

Conformity with EMC directives

Developed in acc. with standard	IEC 61000-6.2
Test standard	IEC 61000-4-2 (ESD)
Test result	Criterion B
Test standard	IEC 61000-4-3 (immunity to radiated interference)
Test result	Criterion A
Test standard	IEC 61000-4-4 (burst)
Test result	Criterion B
Test standard	IEC 61000-4-5 (surge)
Test result	Criterion B
Test standard	IEC 61000-4-6 (immunity to conducted interference)
Test result	Criterion A
Test standard	EN 60068-2-30

Classifications

eCl@ss

eCl@ss 4.0	27250501
eCl@ss 4.1	27250501
eCl@ss 5.0	27250501
eCl@ss 5.1	27250501
eCl@ss 6.0	19170106
eCl@ss 7.0	19170106
eCl@ss 8.0	19170106

ETIM

ETIM 2.0	EC000734

Industrial Ethernet Switch - FL SWITCH LM 8TX - 2832632

Classifications

ETIM

ETIM 3.0	EC000734
ETIM 4.0	EC000734
ETIM 5.0	EC000734

UNSPSC

UNSPSC 6.01	43172015
UNSPSC 7.0901	43201404
UNSPSC 11	43172015
UNSPSC 12.01	43201410
UNSPSC 13.2	43201410

Phoenix Contact 2014 © - all rights reserved
http://www.phoenixcontact.com

AUTOMATION

User manual

UM EN FL SWITCH LM

Order No.: 2888851

Hardware and software for Lean Managed Switches

PHOENIX CONTACT
INSPIRING INNOVATIONS

AUTOMATION

User manual

Hardware and software for Lean Managed Switches

2011-09-01

Designation: UM EN FL SWITCH LM

Revision: 05

Order No.: 2888848

This user manual is valid for:

Designation	Oder No.
FL SWITCH LM 8TX / FL SWITCH LM 8TX-E	2832632 / 2891466
FL SWITCH LM 4TX/2FX / FL SWITCH LM 4TX/2FX-E	2832658 / 2891660
FL SWITCH LM 4TX/2FX SM / FL SWITCH LM 4TX/2FX SM-E	2891916 / 2891864
FL SWITCH LM 5TX/FL SWITCH LM 5TX-E	2989527 / 2989336
FL SWITCH LM 4TX/2FX ST/FL SWITCH LM 4TX/2FX ST-E	2989132 / 2989831
FL SWITCH LM 4TX/2FX SM ST/FL SWITCH LM 4TX/2FX SM ST-E	2989239 / 2989938
FL SWITCH LM 4TX/1FX/FL SWITCH LM 4TX/1FX-E	2989624 / 2989433
FL SWITCH LM 4TX/1FX ST/FL SWITCH LM 4TX/1FX ST-E	2989721 / 2989530
FL SWITCH LM 4TX/1FX SM/FL SWITCH LM 4TX/1FX SM-E	2989828 / 2989637
FL SWITCH LM 4TX/1FX SM ST/FL SWITCH LM 4TX/1FX SM ST-E	2989925 / 2989734

Please observe the following notes

In order to ensure the safe use of the product described, you have to read and understand this manual. The following notes provide information on how to use this manual.

User group of this manual

The use of products described in this manual is oriented exclusively to qualified electricians or persons instructed by them, who are familiar with applicable standards and other regulations regarding electrical engineering and, in particular, the relevant safety concepts.

Phoenix Contact accepts no liability for erroneous handling or damage to products from Phoenix Contact or third-party products resulting from disregard of information contained in this manual.

Explanation of symbols used and signal words

This is the safety alert symbol. It is used to alert you to potential personal injury hazards. Obey all safety messages that follow this symbol to avoid possible injury or death.

DANGER
This indicates a hazardous situation which, if not avoided, will result in death or serious injury.

WARNING
This indicates a hazardous situation which, if not avoided, could result in death or serious injury.

CAUTION
This indicates a hazardous situation which, if not avoided, could result in minor or moderate injury.

The following types of messages provide information about possible property damage and general information concerning proper operation and ease-of-use.

NOTE
This symbol and the accompanying text alerts the reader to a situation which may cause damage or malfunction to the device, either hardware or software, or surrounding property.

This symbol and the accompanying text provides additional information to the reader. It is also used as a reference to other sources of information (manuals, data sheets, literature) on the subject matter, product, etc.

General terms and conditions of use for technical documentation

Phoenix Contact reserves the right to alter, correct, and/or improve the technical documentation and the products described in the technical documentation at its own discretion and without giving prior notice, insofar as this is reasonable for the user. The same applies to any technical changes that serve the purpose of technical progress.

The receipt of technical documentation (in particular data sheets, installation instructions, manuals, etc.) does not constitute any further duty on the part of Phoenix Contact to furnish information on alterations to products and/or technical documentation. Any other agreement shall only apply if expressly confirmed in writing by Phoenix Contact. Please note that the supplied documentation is product-specific documentation only and that you are responsible for checking the suitability and intended use of the products in your specific application, in particular with regard to observing the applicable standards and regulations. Although Phoenix Contact makes every effort to ensure that the information content is accurate, up-to-date, and state-of-the-art, technical inaccuracies and/or printing errors in the information cannot be ruled out. Phoenix Contact does not offer any guarantees as to the reliability, accuracy or completeness of the information. All information made available in the technical data is supplied without any accompanying guarantee, whether expressly mentioned, implied or tacitly assumed. This information does not include any guarantees regarding quality, does not describe any fair marketable quality, and does not make any claims as to quality guarantees or guarantees regarding the suitability for a special purpose.

Phoenix Contact accepts no liability or responsibility for errors or omissions in the content of the technical documentation (in particular data sheets, installation instructions, manuals, etc.).

The aforementioned limitations of liability and exemptions from liability do not apply, in so far as liability must be assumed, e.g., according to product liability law, in cases of premeditation, gross negligence, on account of loss of life, physical injury or damage to health or on account of the violation of important contractual obligations. Claims for damages for the violation of important contractual obligations are, however, limited to contract-typical, predictable damages, provided there is no premeditation or gross negligence, or that liability is assumed on account of loss of life, physical injury or damage to health. This ruling does not imply a change in the burden of proof to the detriment of the user.

Statement of legal authority

This manual, including all illustrations contained herein, is copyright protected. Use of this manual by any third party is forbidden. Reproduction, translation, and public disclosure, as well as electronic and photographic archiving or alteration requires the express written consent of Phoenix Contact. Violators are liable for damages.

Phoenix Contact reserves all rights in the case of patent award or listing of a registered design. Third-party products are always named without reference to patent rights. The existence of such rights shall not be excluded.

How to contact us

Internet

Up-to-date information on Phoenix Contact products and our Terms and Conditions can be found on the Internet at:

www.phoenixcontact.com.

Make sure you always use the latest documentation.
It can be downloaded at:

www.phoenixcontact.net/catalog.

Subsidiaries

If there are any problems that cannot be solved using the documentation, please contact your Phoenix Contact subsidiary.
Subsidiary contact information is available at www.phoenixcontact.com.

Published by

PHOENIX CONTACT GmbH & Co. KG
Flachsmarktstraße 8
32825 Blomberg
GERMANY
Phone +49 - (0) 52 35 - 3-00
Fax +49 - (0) 52 35 - 3-4 12 00

PHOENIX CONTACT
P.O. Box 4100
Harrisburg, PA 17111-0100
USA
Phone +1-717-944-1300

Should you have any suggestions or recommendations for improvement of the contents and layout of our manuals, please send your comments to

tecdoc@phoenixcontact.com.

Table of contents

1 Lean Managed Switch 1-1

1.1 Properties 1-1
1.1.1 Front view/operating elements/ slots of the LMS 1-2
1.1.2 Dimensions of the LMS 1-3
1.1.3 Status and diagnostic indicators 1-4
1.1.4 Firmware versions and their functions 1-4

1.2 Mounting/removal 1-5
1.2.1 Mounting and removing the LMS 1-5
1.2.2 Mounting 1-6
1.2.3 Removal 1-6

1.3 Installing the Lean Managed Switch 1-7
1.3.1 Connecting the supply voltage 1-7
1.3.2 Alarm contact 1-8
1.3.3 RS-232 interface for external management 1-9
1.3.4 Grounding 1-9

2 Startup and functions 2-1

2.1 Basic settings 2-1
2.1.1 Default upon delivery/default settings 2-1
2.1.2 Assigning IP parameters 2-1
2.1.3 Flowchart after a restart 2-6

2.2 Frame switching 2-8
2.2.1 Store-and-forward 2-8
2.2.2 Multi-address function 2-8
2.2.3 Learning addresses 2-8
2.2.4 Prioritization (Quality of Service) 2-9

3 Configuration and diagnostics 3-1

3.1 Factory Manager 3-1
3.1.1 General function 3-1
3.1.2 Assigning IP parameters 3-1
3.1.3 Configuration and diagnostics 3-3

3.2 Web-based management (WBM) 3-4
3.2.1 General function 3-4
3.2.2 Requirements for the use of WBM 3-4
3.2.3 Functions/information in WBM 3-5
3.2.4 Carrying out the firmware/software update 3-9

3.3 Simple Network Management Protocol (SNMP) 3-23
3.3.1 General function 3-23
3.3.2 Schematic view of SNMP management 3-25
3.3.3 RFC1213 MIB - MIB II 3-27

3.3.4 Bridge MIB (1.3.6.1.2.1.17) 3-29
3.3.5 Private MIBs 3-31
3.4 Management via local RS-232 communication interface 3-52
3.4.1 General function 3-52
3.4.2 User interface functions 3-53
3.4.3 Starting with faulty software 3-56

4 Rapid Spanning Tree 4-1
4.1 General function 4-1
4.1.1 General function 4-1
4.2 RSTP startup 4-2
4.2.1 Enabling RSTP on all switches involved 4-2
4.2.2 RSTP fast ring detection 4-10
4.2.3 Connection failure - Example 4-11
4.2.4 Example topologies 4-13
4.2.5 Configuration notes for Rapid Spanning Tree 4-19
4.3 Large Tree support 4-19
4.3.1 Large Tree support 4-19
4.3.2 Properties of Large Tree support 4-20

5 Multicast filtering 5-1
5.1 Basics 5-1
5.2 Dynamic multicast groups 5-1
5.2.1 Internet Group Management Protocol (IGMP) 5-1
5.3 Multicast source detection 5-5
5.3.1 Properties of multicast source detection 5-5

6 Virtual Local Area Network (VLAN) 6-1
6.1 Basics 6-1
6.2 Enabling the VLAN web pages in web-based management 6-1
6.2.1 Management VLAN ID 6-2
6.2.2 Changing the management VLAN ID 6-2
6.3 General VLAN Configuration 6-3
6.4 Current VLANs 6-4
6.4.1 Static VLANs 6-5
6.4.2 VLAN Port Configuration 6-6
6.4.3 VLAN Port Configuration Table 6-6
6.5 Setting up static VLANs 6-7
6.6 VLAN and (R)STP 6-8

7 Technical data 7-1
7.1 Ordering data 7-3

1 Lean Managed Switch

1.1 Properties

The **L**ean **M**anaged **S**witch (**LMS**) is an Ethernet switch, which is suitable for industrial use. The LMS has five, six or eight ports and is available in various versions:

- FL SWITCH LM 5TX(-E) with five RJ45 ports
- FL SWITCH LM 8TX(-E) with eight RJ45 ports
- FL SWITCH LM 4TX/FX(-E) with four RJ45 ports and one FX port (multi-mode)
- FL SWITCH LM 4TX/FX ST(-E) with four RJ45 ports and one FX port (multi-mode) in ST format
- FL SWITCH LM 4TX/FX SM(-E) with four RJ45 ports and one FX port (single-mode)
- FL SWITCH LM 4TX/FX ST SM(-E) with four RJ45 ports and one FX port (single-mode) in ST format
- FL SWITCH LM 4TX/2FX ST(-E) with four RJ45 ports and two FX ports (multi-mode) in ST format
- FL SWITCH LM 4TX/2FX(-E) with four RJ45 ports and two FX ports (multi-mode)
- FL SWITCH LM 4TX/2FX SM(-E) with four RJ45 ports and two FX ports (single-mode)
- FL SWITCH LM 4TX/2FX SM ST(-E) with four RJ45 ports and two FX ports (single-mode) in ST format

Figure 1-1 Some versions of the Lean Managed Switch

Future-proof networks for the highest possible requirements

Maximum availability

Maximum network availability
A device design that does not use a fan, the redundant power supply, and conformance with all relevant industrial standards in terms of EMC, climate, mechanical load, etc. ensure the highest possible level of availability.

Redundancy can also be created with standards: the Rapid Spanning Tree Protocol ensures the safe operation of the entire network regardless of topology, even in the event of a cable interrupt.

All information

Clear information
Two LEDs per port ensure that you always have sufficient local information. A web server and an SNMP agent are provided for diagnostics, maintenance, and configuration via the network. A terminal access point can be used for local operation.

Features and fields of application of the LMS

– Increased network performance by filtering data traffic:
  - Local data traffic remains local.
  - The data volume in the network segments is reduced.
– Easy network expansion and network configuration.
– Coupling segments with different transmission speeds.
  Automatic detection of 10 Mbps or 100 Mbps data transmission speed for the RJ45 ports.
– Increased availability through the use of redundant transmission paths in various topologies and meshed structures as a result of RSTP.
– The switch can be configured using web-based management, SNMP or locally via an RS-232 interface.

1.1.1 Front view/operating elements/ slots of the LMS

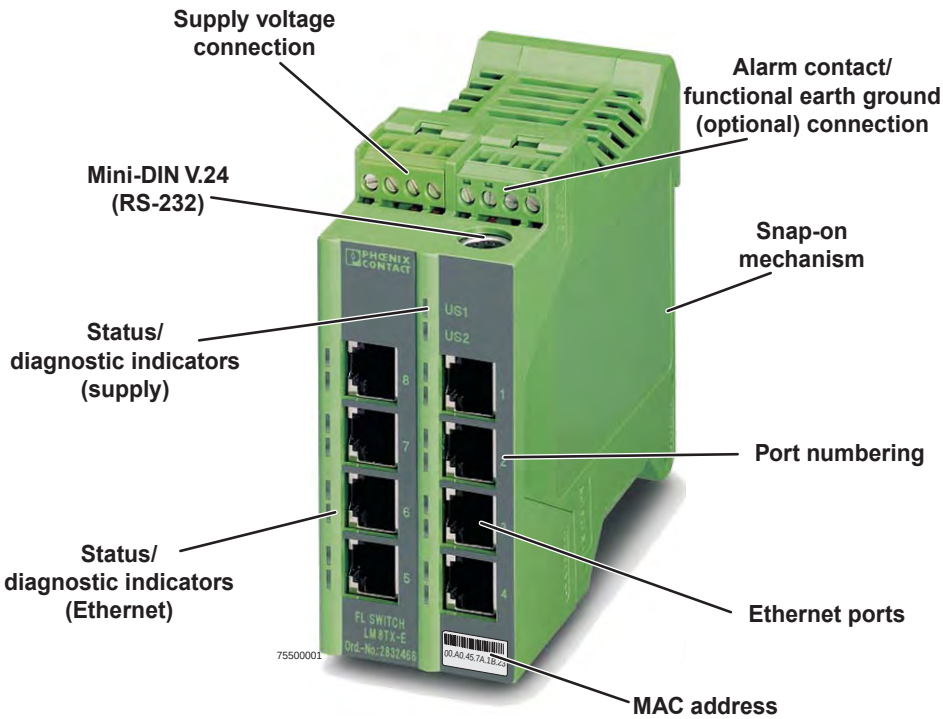

Figure 1-2 Front view/operating elements/slots of the LMS

- Diagnostic/status indicators
  Important information is displayed directly on the device. Each port has two LEDs. The top LED always indicates "LNK/ACT", the bottom LED indicates the data transmission speed.
- Diagnostic and status LEDs
  Two status and diagnostic LEDs are available for the supply voltage and for each port.
- Mini-DIN RS-232
  RS-232 interface in Mini-DIN format for local configuration via the serial interface.
- Alarm contact/functional earth ground
  The floating alarm contact and the optional functional earth ground can be connected here via the COMBICON connector.
- Supply voltage connection
  The supply voltage can also be connected redundantly via the 4-pos. COMBICON connector as an option.

1.1.2 Dimensions of the LMS

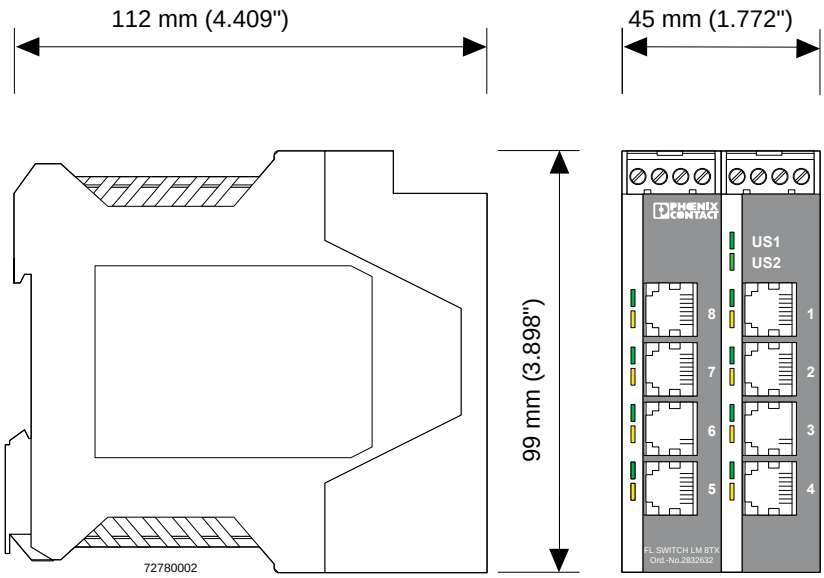

Figure 1-3 Housing dimensions of the LMS in millimeters (inches)

1.1.3 Status and diagnostic indicators

Des.	Color	Status	Meaning
US1	Green	ON	Supply voltage US1 in the tolerance range
		OFF	Supply voltage US1 less than 18 V DC
US2	Green	ON	Supply voltage US2 in the tolerance range
		OFF	Supply voltage US2 less than 18 V DC
LNK	Green	ON	Link active
		OFF	Link not active
		Flashing	Transmitting/receiving
100	Yellow	ON	Full duplex mode
		OFF	Half duplex mode
		Flashing	Collision detected

1.1.4 Firmware versions and their functions

1.1.4.1 For the following switch versions (LM)

– FL SWITCH LM 8TX
– FL SWITCH LM 4TX/2FX
– FL SWITCH LM 4TX/2FX SM

Firmware Version 1.04 provides the standard switch functions.

Firmware 2.02 offers the following additional functions:

– Multicast filter mechanisms
– IGMP snooping and querier function
– Port mirroring
– Port statistics
– Link status via alarm contact
– MAC address clearing

Firmware 2.13 offers the following additional functions:

– Optimized IGMP function, query port is not entered in GDA
– Optimized Rapid Spanning Tree Protocol (RSTP), RSTP function optimized in connection with fiberglass FX port

Firmware 3.03 offers the following additional functions:

- Optimized Rapid Spanning Tree Protocol (RSTP)
- Optimized IGMP snooping and querier function
- RSTP extension: Fast ring detection
- RSTP extension: Large tree support
- BootP and IP parameter storage optimized
- Ping requests > 1500 bytes are answered

Firmware 3.10 offers the following additional functions:

The following versions are supported:
FL SWITCH LM 5TX
FL SWITCH LM 4TX/1FX
FL SWITCH LM 4TX/1FX ST
FL SWITCH LM 4TX/1FX SM
FL SWITCH LM 4TX/1FX SM ST
FL SWITCH LM 4TX/2FX ST
FL SWITCH LM 4TX/2FX SM ST

Firmware 3.40 offers the following additional functions:

- Saving and loading configurations
- Port mirroring/link mirroring
- DHCP server
- Extended multicast filtering

1.1.4.2 For the following switch versions (LM-E)

Firmware 1.11 supports the following versions:

- FL SWITCH LM 8TX-E
- FL SWITCH LM 4TX/2FX-E
- FL SWITCH LM 4TX/2FX SM-E

Firmware 3.40 additionally supports the following versions:

- 2989336 FL SWITCH LM 5TX-E
- 2989433 FL SWITCH LM 4TX/1FX-E
- 2989530 FL SWITCH LM 4TX/1FX ST-E
- 2989637 FL SWITCH LM 4TX/1FX SM-E
- 2989734 FL SWITCH LM 4TX/1FX SM ST-E
- 2989831 FL SWITCH LM 4TX/2FX ST-E
- 2989938 FL SWITCH LM 4TX/2FX SM ST-E

1.2 Mounting/removal

1.2.1 Mounting and removing the LMS

Mount the LMS on a clean DIN rail according to DIN EN 50 022 (e.g., NS 35 ... from Phoenix Contact). To avoid contact resistance only use clean, corrosion-free DIN rails. Before mounting the modules, an end clamp (E/NS 35N, Order No. 0800886) should be mounted on the left-hand side next to the LMS to stop the modules from slipping on the DIN rail. The end clamp should only be mounted on the right-hand side once the LMS has been mounted.

1.2.2 Mounting

1. Place the module onto the DIN rail from above (A). The upper holding keyway must be hooked onto the top edge of the DIN rail. Push the module from the front towards the mounting surface (B).

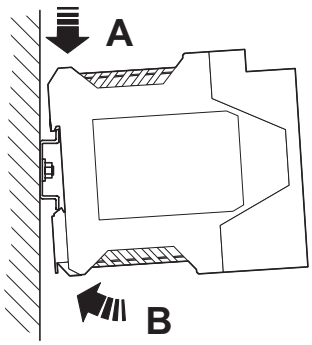

Figure 1-4 Snapping the LMS onto the DIN rail

2. Once the module has been snapped on properly, check that it is fixed securely on the DIN rail. Check whether the positive latches are facing upwards, i.e., snapped on correctly.

1.2.3 Removal

1. Remove all plug-in connections.
2. Pull down the positive latches using a suitable tool (e.g., screwdriver). Both positive latches remain snapped out. Then swivel the bottom of the module away from the DIN rail slightly (A). Next, lift the module upwards away from the DIN rail (B).

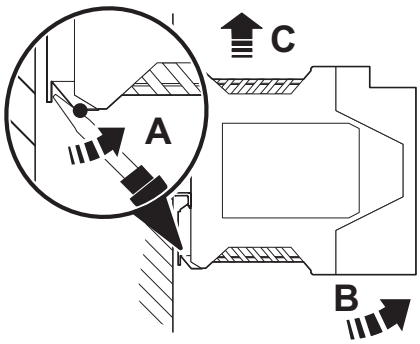

Figure 1-5 Removing the LMS

1.3 Installing the Lean Managed Switch

1.3.1 Connecting the supply voltage

1.3.1.1 Assignment of the COMBICON connector

Terminal block	Meaning
1	Supply voltage +US1
2	GND US1
3	Supply voltage +US2
4	GND US2
5 and 6	Floating alarm contact
7	Functional earth ground (optional)
8	Not used

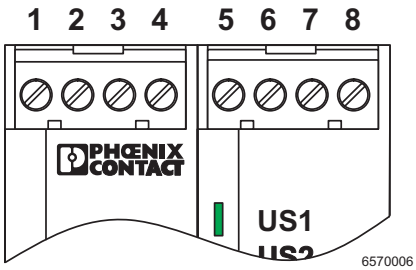

NOTE: The switch is designed for SELV/PELV operation at +24 V DC according to IEC 60950-1/VDE 0805. Only SELV/PELV according to the defined standards may be used for supply purposes.

24 V DC

The LMS is operated with a 24 V DC voltage that can be supplied redundantly, if required (see Figure 1-6 version 2).

If redundant power supply monitoring is active (default setting), an error is indicated if only one voltage is applied. A bridge between US1 and US2 prevents this error message. However, it is also possible to deactivate monitoring in web-based management.

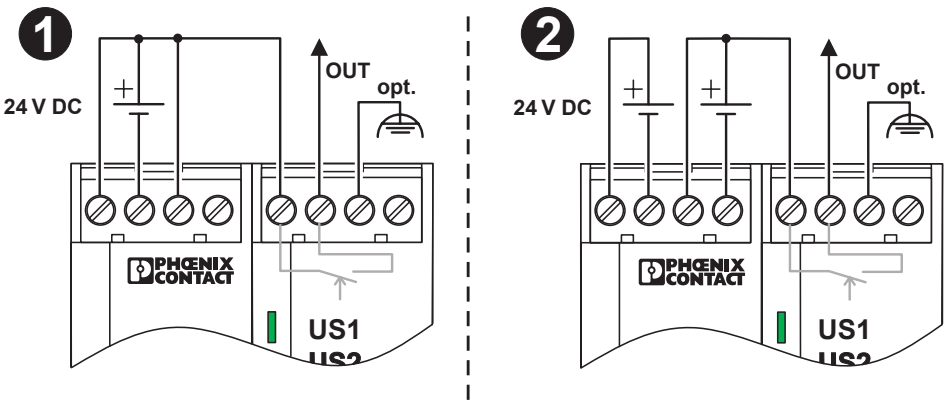

Figure 1-6 LMS supply

1.3.2 Alarm contact

The switch has a floating alarm contact. An error is indicated when the contact is opened.

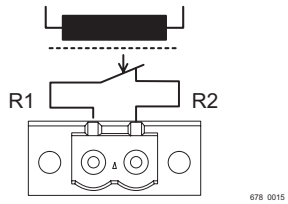

Figure 1-7 Basic circuit diagram for the alarm contact

In the event of non-redundant power supply, the switch indicates a supply voltage failure by opening the alarm contact. This error message can be prevented by connecting the supply voltage to both terminals blocks in parallel, as shown in Figure 1-6, or by deactivating redundant power supply monitoring in web-based management.

1.3.3 RS-232 interface for external management

The 6-pos. Mini-DIN female connector provides a serial interface to connect a local management station. Use the "PRG CAB MINI DIN" programming cable (Order No. 2730611). It can be used to connect a VT100 terminal or a PC with corresponding terminal emulation to the management interface (for an appropriate cable, please refer to "Ordering data" on page 7-3). Set the following transmission parameters:

Bits per second	38400
Data bits	8
Parity	None
Stop bits	1
Flow control	None

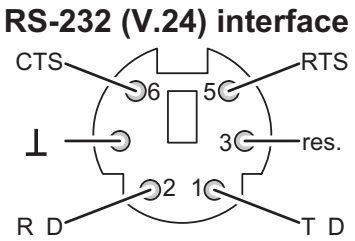

Figure 1-8 Transmission parameters and assignment of the RS-232 interface

1.3.4 Grounding

Grounding protects people and machines against hazardous voltages. To avoid these dangers, correct installation, taking the local conditions into account, is vital.

All Factoryline devices must be grounded so that any possible interference is shielded from the data telegram and discharged to ground potential.

A conductor of at least 2.5 mm^2 must be used for grounding. When mounting on a DIN rail, the DIN rail must be connected to protective earth ground using grounding terminal blocks. The module is connected to protective earth ground via a metal clip on the rear of the housing.

Option: In an environment particularly prone to EMI, noise immunity can be increased by an additional low-impedance connection to functional earth ground via terminal block 7 (Section "Assignment of the COMBICON connector" on page 1-7).

2 Startup and functions

NOTE: The IGMP snooping function is activated by default upon delivery for "**E**" versions. For other versions, it can be activated as necessary in WBM.

2.1 Basic settings

The basic Ethernet functions do not have to be configured and are available when the supply voltage is switched on.

2.1.1 Default upon delivery/default settings

By default upon delivery or after the system is reset to the default settings, the following functions and properties are available:

– The password is "private".
– All IP parameters are deleted. The switch has **no** valid IP parameters:
  IP address: 0.0.0.0
  Subnet mask: 0.0.0.0
  Gateway: 0.0.0.0
– BootP is activated as the addressing mechanism.
– All available ports are activated with the following parameters:
  - Auto negotiation and autocrossing for RJ45 ports.
  - 100 Mbps - full duplex for FX ports.
– All information collected by the SNMP agent is deleted.
– The web server, SNMP agent, and RS-232 interface are active.
– The "Rapid Spanning Tree" WBM configuration page is activated.
– The alarm contact only opens in the event of non-redundant power supply.
– The aging time is set to 48 seconds.

2.1.2 Assigning IP parameters

When the supply voltage is switched on, the switch sends requests (BootP requests) to assign IP parameters.

The "BootP" function can be deactivated via the management. By default upon delivery, the "BootP" function is activated.

The assignment of valid IP parameters is vital to the management function of the switch.

Options for assigning IP parameters:

– Configuration via the BootP protocol (default upon delivery)
– Static configuration via the management interfaces

The assignment of IP parameters with Factory Manager 2.1 is described on page 3-1.

2.1.2.1 Valid IP parameters

IP parameters comprise the following three elements: "IP address", "subnet mask", and "default gateway/router".

Valid IP addresses are:
000.000.000.001 to 126.255.255.255
128.000.000.000 to 223.255.255.255

Valid multicast addresses are:
224.000.000.001 to 239.255.255.255

Valid subnet masks are:
255.000.000.000 to 255.255.255.252

Default gateway/router:
The IP address of the gateway/router must be in the same subnetwork as the IP address of the switch.

2.1.2.2 Assigning IP addresses

The IP address is a 32-bit address, which consists of a network part and a user part. The network part consists of the network class and the network address.
There are currently five defined network classes; Classes A, B, and C are used in modern applications, while Classes D and E are hardly ever used. It is therefore usually sufficient if a network device only "recognizes" Classes A, B, and C.

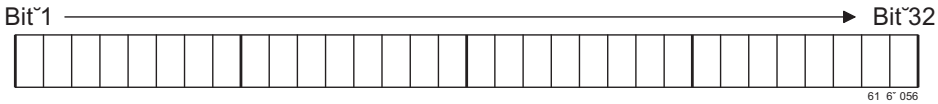

Figure 2-1 Location of the bits within the IP address

With binary representation of the IP address the network class is represented by the first bits. The key factor is the number of “ones” before the first “zero.” The assignment of classes is shown in the table below. The empty cells in the table are not relevant to the network class and are already used for the network address.

	Bit 1	Bit 2	Bit 3	Bit 4	Bit 5
Class A	0				
Class B	1	0			
Class C	1	1	0		
Class D	1	1	1	0	
Class E	1	1	1	1	0

The bits for the network class are followed by those for the network address and the user address. Depending on the network class, a different number of bits are available, both for the network address (network ID) and the user address (host ID).

	Network ID	Host ID
Class A	7 bits	24 bits
Class B	14 bits	16 bits
Class C	21 bits	8 bits
Class D	28-bit multicast identifier	
Class E	27 bits (reserved)	

IP addresses can be represented in decimal or hexadecimal form. In decimal notation, bytes are separated by dots (dotted decimal notation) to show the logical grouping of the individual bytes.

The decimal points do not divide the address into a network and user address. Only the value of the first bits (before the first “zero”) specifies the network class and the number of remaining bits in the address.

Possible address combinations

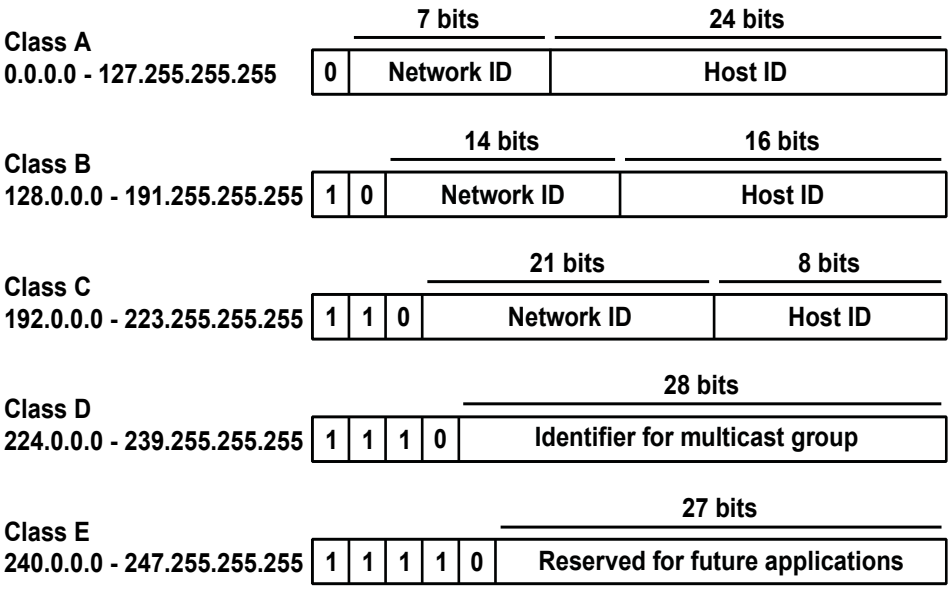

Figure 2-2 Structure of IP addresses

2.1.2.3 Special IP addresses for special applications

Certain IP addresses are reserved for special functions. The following addresses should not be used as standard IP addresses.

127.x.x.x addresses

The Class A network address "127" is reserved for a loopback function on all computers, regardless of the network class. This loopback function may only be used on networked computers for internal test purposes.

If a telegram is addressed to a computer with the value 127 in the first byte, the receiver immediately sends the telegram back to the transmitter.

The correct installation and configuration of the TCP/IP software, for example, can be checked in this way.

As Layers 1 and 2 of the ISO/OSI reference model are not included in the test they should be tested separately using the ping function.

Value 255 in the byte

Value 255 is defined as a broadcast address. The telegram is sent to all the computers that are in the same part of the network. Examples: 004.255.255.255, 198.2.7.255 or 255.255.255.255 (all the computers in all the networks). If the network is divided into subnetworks, the subnet masks must be observed during calculation, otherwise some devices may be omitted. In other words, the last address of an area is reserved as the broadcast address.

0.x.x.x addresses

Value 0 is the ID of the specific network. If the IP address starts with a zero, the receiver is in the same network. Example: 0.2.1.1, refers to device 2.1.1 in this network.

The zero previously signified the broadcast address. If older devices are used, unauthorized broadcast and complete overload of the entire network (broadcast storm) may occur when using IP address 0.x.x.x.

2.1.2.4 Subnet masks

Routers and gateways divide large networks into several subnetworks. The subnet mask is used to assign the IP addresses of individual devices to specific subnetworks. The **network part** of an IP address is **not** modified by the subnet mask. An extended IP address is generated from the user address and subnet mask. Because the masked subnetwork is only recognized by the local computers, this extended IP address appears as a standard IP address to all the other devices.

Structure of the subnet mask

The subnet mask always contains the same number of bits as an IP address. The subnet mask has the same number of bits (in the same position) set to "one", which is reflected in the IP address for the network class.

Example: A Class A IP address contains a 1-byte network address and a 3-byte computer address. Therefore, the first byte of the subnet mask may only contain "ones".

The remaining bits (three bytes) then contain the address of the subnetwork and the computer. The extended IP address is created when the bits of the IP address and the bits of the subnet mask are ANDed. Because the subnetwork is only recognized by local devices, the corresponding IP address appears as a "normal" IP address to all the other devices.

Application

If the ANDing of the address bits gives the local network address and the local subnetwork address, the device is located in the local network. If the ANDing gives a different result, the data telegram is sent to the subnetwork router.

Example for a Class B subnet mask:

Decimal representation: 255.255.192.0

Binary representation: 1111 1111.1111 1111.1100 0000.0000 0000

Using this subnet mask, the TCP/IP protocol software differentiates between the devices that are connected to the local subnetwork and the devices that are located in other subnetworks.

Example: Device 1 wants to establish a connection with device 2 using the above subnet mask. Device 2 has IP address 59.EA.55.32.

Representation of the IP address for device 2:

Hexadecimal representation: 59.EA.55.32

Decimal representation: 0101 1001.1110 1010.0101 0101.0011 0010

61462011

The individual subnet mask and the IP address for device 2 are then ANDed bit-by-bit by the software to determine whether device 2 is located in the local subnetwork.

ANDing the subnet mask and IP address for device 2:

Subnet mask:		1111 1111.1111 1111.1100 0000.0000 0000
	AND	
IP address:		0101 1001.1110 1010.0101 0101.0011 0010
Result:		0101 1001.1110 1010.0100 0000.0000 0000

61462012

Subnetwork

After ANDing, the software determines that the relevant subnetwork (01) does not correspond to the local subnetwork (11) and forwards the data telegram to a subnetwork router.

2.1.3 Flowchart after a restart

2.1.3.1 Loading the configuration data

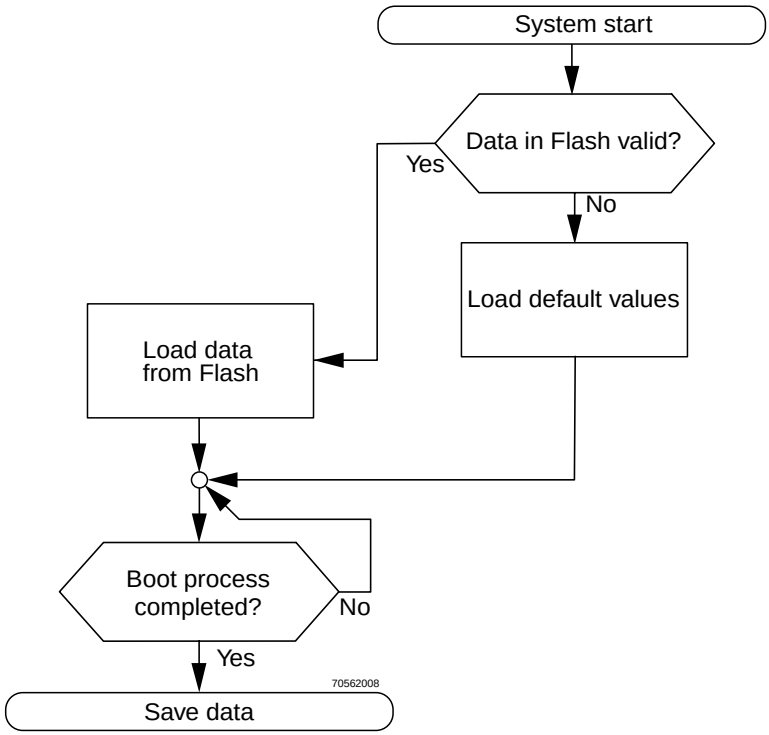

Figure 2-3 Flowchart: Loading the configuration data

2.1.3.2 Assigning IP parameters

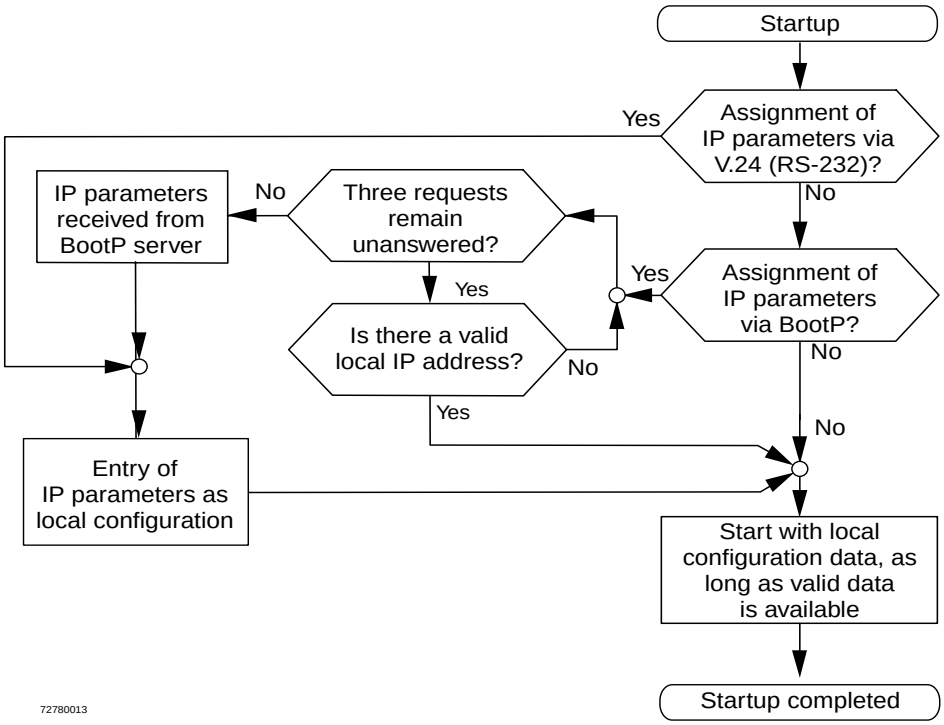

Figure 2-4 Flowchart: Assigning IP parameters

2.2 Frame switching

The Managed Switch operates in store-and-forward mode. When receiving a data packet, the switch analyzes the source and destination addresses. The switch stores up to 1023 MAC addresses with an aging time of 48 seconds in its address table.

2.2.1 Store-and-forward

All data telegrams that are received by the switch are saved and their validity is checked. Invalid or faulty data packets (> 1522 bytes or CRC errors) and fragments (< 64 bytes) are rejected. Valid data telegrams are forwarded by the switch.

2.2.2 Multi-address function

The switch learns all the source addresses for each port. Only packets with:

– unknown source addresses
– a source address for this port
– a multicast/broadcast address

in the destination address field are forwarded via the relevant port. The switch can learn up to 1023 addresses. This is important when more than one termination device is connected to one or more ports. In this way, several independent subnetworks can be connected to one switch.

2.2.3 Learning addresses

The LMS independently learns the addresses for termination devices, which are connected via a port, by evaluating the source addresses in the data telegram. When the LMS receives a data telegram, it only forwards this data telegram to the port that connects to the specified device (if the address could be learned beforehand).
The LMS can learn up to 1023 addresses and store them in its table. The switch monitors the age of the learned addresses. The switch automatically deletes address entries from its address table that have exceeded a specific age (48 seconds, aging time).

All learned entries are deleted on a restart.

Flowchart for "learning addresses" using the example of unicast addresses

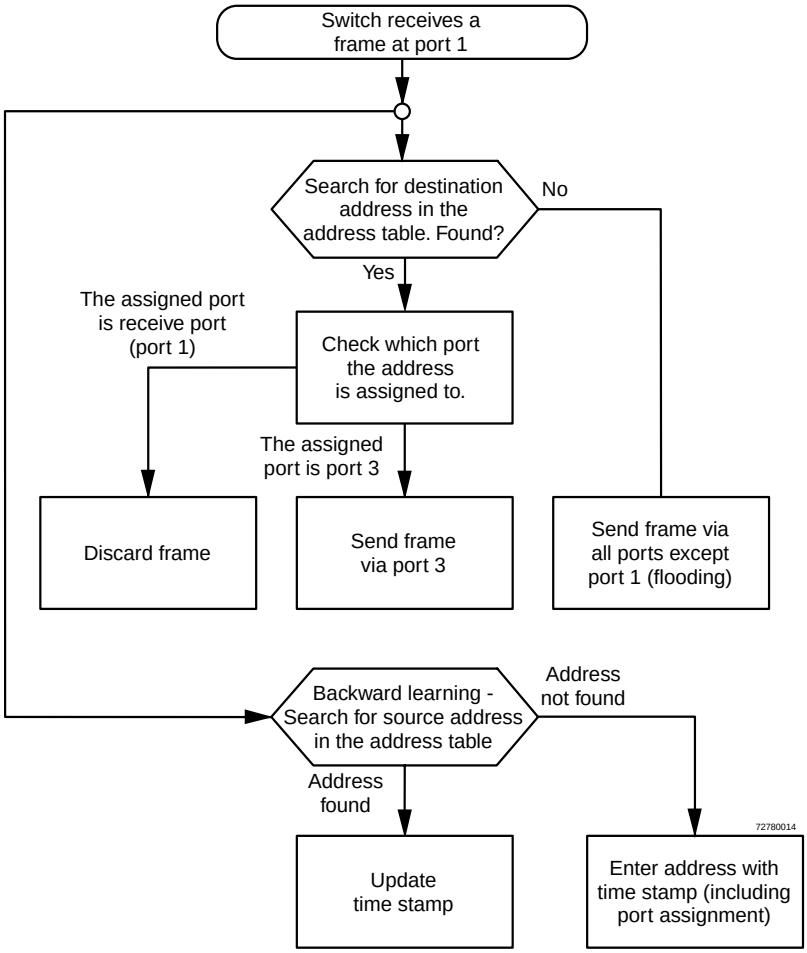

Figure 2-5 Flowchart for "learning addresses"

2.2.4 Prioritization (Quality of Service)

The switch supports two priority queues for adjusting the internal packet processing sequence (traffic classes according to IEEE 802.1D). Data telegrams that are received are assigned to these classes according to their priority, which is specified in the VLAN/prioritization tag:

– Data packets with values between "0" and "3" in the priority field are low (default) priority
– Data packets with values between "4" and "7" in the priority field are transmitted with high priority by the switch

2.2.4.1 VLAN/prioritization tag

The LMS processes incoming data packets in accordance with the prioritization information contained in the Ethernet packet (VLAN/prioritization tag).
The tag enables the specification of a priority level from 0 to 7, which the LMS assigns to one of its two internal queues. By default upon delivery, the packets with priorities from 0 to 3 are treated as low-priority packets whereas packets with priorities from 4 to 7 are high-priority Ethernet packets.

Processing rules

The switch controller in the LMS forwards received packets to one of the receive queues according to the following decisions:

– BPDU packets are always assigned to the high-priority queue.
– Packets with unknown unicast addresses are always assigned to the low-priority queue.
– Packets are assigned to the high-priority queue if the priority from the VLAN/prioritization tag is mapped to the "high" level (default priority 4 to 7).
– The internal port priority "high" results in priority level 7 handling, i.e., the basic settings for data packet assignment to the high-priority queue are made.
– All residual data is assigned to the low-priority queue.

2.2.4.2 Strict priority

The switch supports two priority queues for adjusting the packet processing sequence (traffic classes according to IEEE 802.1D). The switches therefore support the QoS functions required by PROFINET RT and meet conformance class A. Data telegrams that are received are assigned to these classes according to their priority, which is specified in the VLAN/prioritization tag:

– Data packets with values between "0" and "3" in the priority field are low priority (default).
– Data packets with values between "4" and "7" in the priority field are transmitted with high priority by the switch.

The LMS uses "strict priority" for transmitting data telegrams. First, **all** high-priority data packets are transmitted. Once these are forwarded, low-priority telegrams are transmitted.

This function prevents delays in high-priority data transmission due to large volumes of low-priority data traffic. Low-priority traffic is rejected when the memory or data channel is overloaded.

3 Configuration and diagnostics

Lean Managed Switches offer several user interfaces for accessing configuration and diagnostic data. The preferred interfaces are the web interface and SNMP interface. These two interfaces can be used to make all the necessary settings and request all information. Access via Telnet/RS-232 interface only enables access to basic information. However, the RS-232 interface also enables firmware update via XMODEM in the event of faulty firmware.

Settings are not automatically saved permanently. The active configuration can be saved permanently by selecting "Save current configuration" on the "Configuration Management" web page, the "SAVE" button in the terminal interface or the "flWorkFWCtrlConfSave" SNMP object.

3.1 Factory Manager

3.1.1 General function

The integration of the LMS in the Factory Manager provides support for configuration and management.

3.1.2 Assigning IP parameters

Only **one** of several options for assigning IP parameters using Factory Manager is described here.

The "**IPAssign.exe**" addressing tool, which is available free of charge, can be used to assign the IP parameters. This program does not have to be installed, as it is an executable exe file. It can be downloaded at www.phoenixcontact.net/download.

Once you have established all the necessary connections and Factory Manager has been started, restart the LMS.

Following the boot phase, the LMS sends the BootP requests, which are received by Factory Manager and displayed in the message window. If you are operating other devices in the same network, messages from these devices may also be displayed. Messages from Phoenix Contact Factoryline components can be easily identified by their MAC address, which starts with 00.A0.45... and is provided on the devices.

Please check the MAC address in the messages to ensure the correct device is addressed.

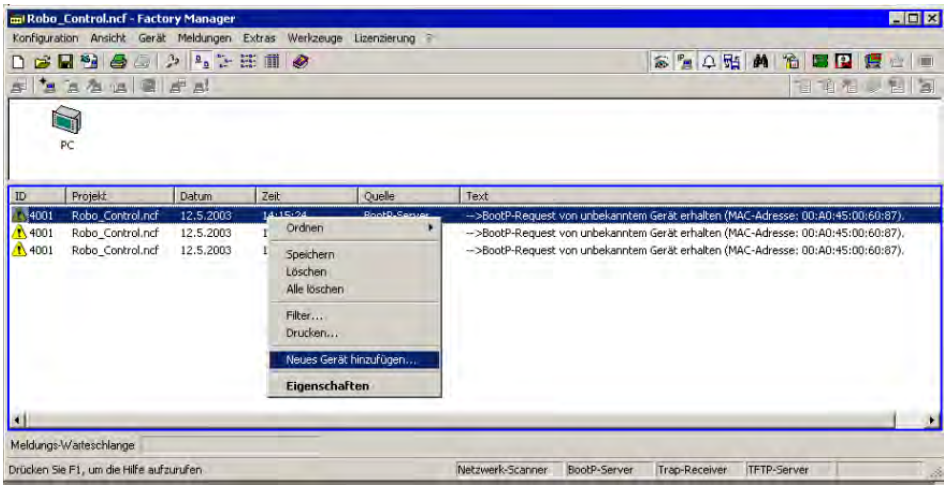

Figure 3-1 Messages from the LMS in Factory Manager

Right-click on one of the LMS messages and select the "Add new device..." menu item. Under "Description" select an icon and enter a device name.

Specify the desired IP parameters under "TCP/IP" (see also Section "Assigning IP parameters" on page 3-1).

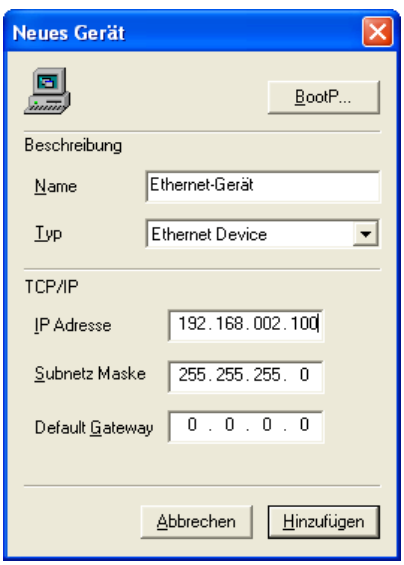

Figure 3-2 Input mask for IP parameters

Make sure that the assignment of IP parameters via BootP is also activated.

Once you have clicked on "Add", the device is added to the project and is indicated as **unavailable**. You must now restart or reset the LMS. After a restart, the LMS resends the BootP requests and receives the corresponding BootP reply from Factory Manager. Once the boot process has been completed the LMS is indicated as available.

If the LMS is still indicated as "unavailable", check your network card settings. Please note that both devices must be located in the same network/subnetwork. If Factory Manager receives the BootP requests this does not mean that the devices are located in the same subnetwork, as the BootP requests are sent as a broadcast across subnetwork boundaries.

3.1.3 Configuration and diagnostics

Numerous options for configuring and diagnosing the LMS can be found in the "Device" menu under "Properties".

General

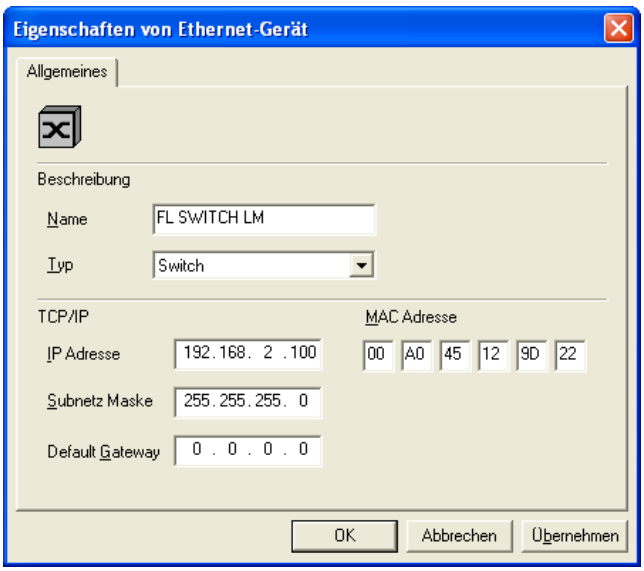

Figure 3-3 "General" menu

Here you can check or modify device names and types as well as IP parameters.

If you modify the IP address and/or the other IP parameters using Factory Manager, once you click "OK" you will no longer have access via Factory Manager. Restarting the LMS activates the modified parameters and restores access.

To activate the new addresses following a restart, BootP must be activated in the LMS.

3.2 Web-based management (WBM)

3.2.1 General function

Online diagnostics

The user-friendly web-based management interface can be used to manage the switch from anywhere in the network using a standard browser. Comprehensive configuration and diagnostic functions are clearly displayed on a graphical user interface. Every user with a network connection to the device has read access to that device via a browser. Depending on the physical structure of the switch, a wide range of information about the device itself, the set parameters, and the operating state can be viewed.

Modifications can only be made by entering the valid password. By default upon delivery, the password is "private".

For security reasons, we recommend you enter a new, unique password.

3.2.2 Requirements for the use of WBM

As the web server operates using the Hyper Text Transfer Protocol, a standard browser can be used. Access is via the URL "http://IP address of the device".
Example: "http://172.16.29.112".
For full operation of the web pages, the browser must support JavaScript 1.2 and Cascading Style Sheets Level 1. We recommend the use of Microsoft Internet Explorer 6.0.

WBM can only be called using a valid IP address. By default upon delivery, the switch has **no** valid IP address.

Settings are not automatically saved permanently. The active configuration can be saved permanently by selecting "Save current configuration" on the "Configuration Management" web page.

3.2.2.1 Structure of the web pages

The web pages are divided into four areas:

– Device type and device logo.
– Device name (assigned by the user) and loading time, to prevent mix-ups.
– Navigation tree on the left-hand side.
– Information tables, which contain current device information during runtime.

3.2.2.2 Password concept

After having entered the valid password, no further entry of the password is necessary for a period of 300 s (default). After this period of time has elapsed or after clicking on "Logout", the password must be re-entered.

The period of time can be set using the "flWorkFWCtrlLoginExpire" SNMP object within a range of 30 s to 3600 s (default 300 s).

The concept is valid for the first ten users. All further users must confirm each modification of the configuration with the password.

3.2.3 Functions/information in WBM

The navigation tree provides direct access to the following four areas:

- **General Instructions**
  Basic information about WBM.
- **Device Information**
  General device information.
- **General Configuration**
  General device configuration.
- **Switch Station**
  Device-specific configuration and diagnostics.

3.2.3.1 General Instructions

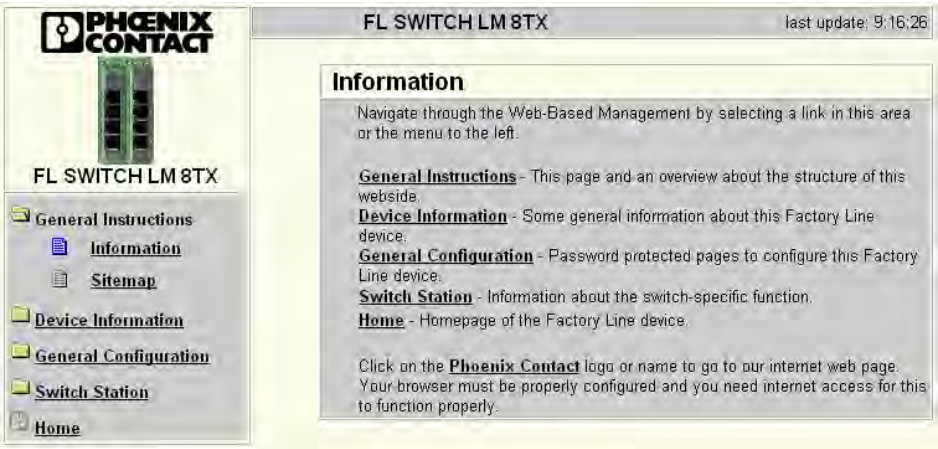

Figure 3-4 "Information" web page

Contains a brief description of WBM and a navigation tree (site map), which is linked to every page of WBM.

3.2.3.2 Device Information

Figure 3-5 "Device Information" web page

"General" menu
This page contains a range of static information about the device and the manufacturer.

"Local Diagnostics" menu

This page describes the meaning of the diagnostic and status indicators.

Local Diagnostics	
Power Supply	
US1	Supply Voltage 1 (green LED)
US2	Supply Voltage 2 (green LED)
Green LED	
On	Link Up
Off	Link Down
Blink	Send or Receive Activity
Yellow LED	
On	Full Duplex Mode
Off	Half Duplex Mode
Blink	Collision Detection

Figure 3-6 "Local Diagnostics" web page

"Serial Port" menu

This page lists the transmission parameters for serial communication.

Serial Port	
Baud Rate	38400
Character Size	8
Parity	None
Stop Bits	1
Flow Control	None

Figure 3-7 "Serial Port" menu

3.2.3.3 General Configuration

"IP Configuration" menu

This page displays the set IP parameters and addressing mechanism. To change the IP parameters via WBM, "Static" assignment must be selected.

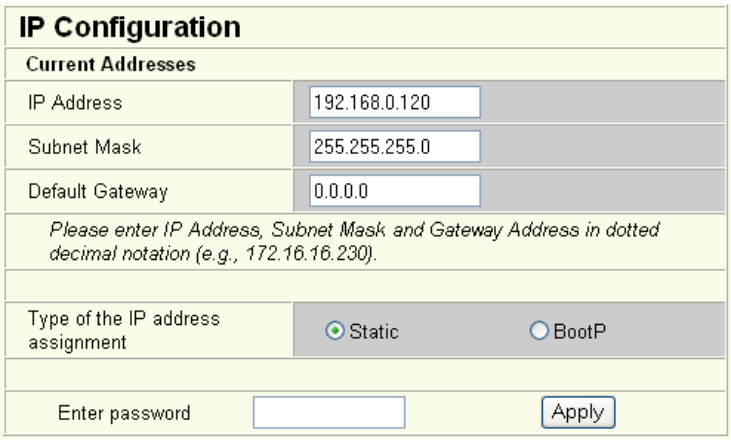

Figure 3-8 "IP Configuration" web page

If you modify the IP address and/or the other IP parameters via WBM, once you click "Apply" you will no longer have access via the IP address set in the browser.

"SNMP Configuration" menu

System Information

This part of the table is used to display or modify user-specific device data, e.g., location, device name or function.

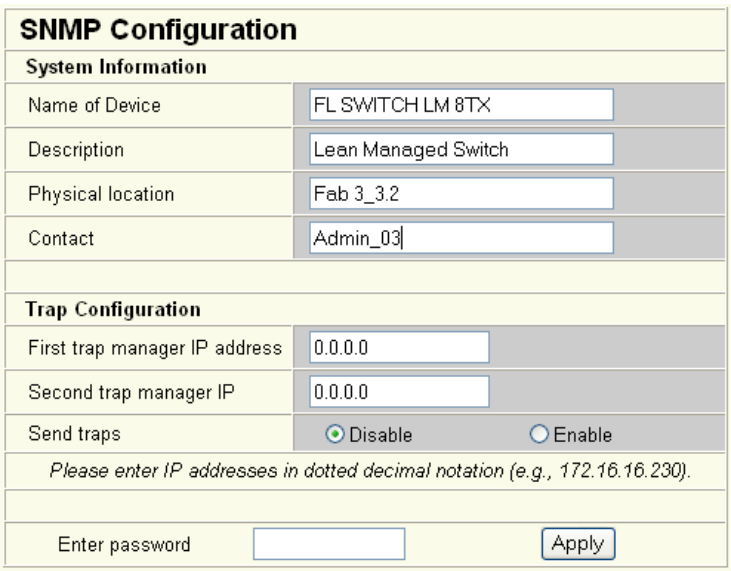

Figure 3-9 "SNMP Configuration" web page

Trap Configuration

This part of the table is used to view or modify the IP addresses of the two trap receivers. It is also used to activate/deactivate the "send traps" function.

"Software Update" menu

This page is used to view or modify the parameters for a software update and to trigger the update.

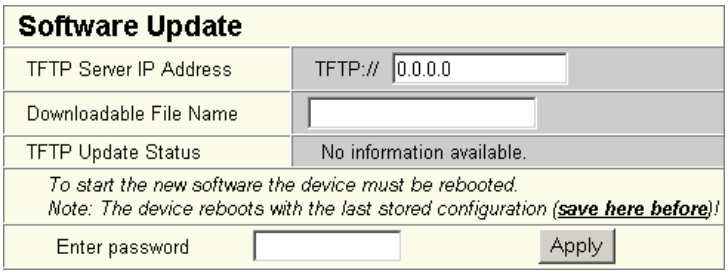

Figure 3-10 "Software Update" web page

3.2.4 Carrying out the firmware/software update

Requirements

The device **must** have **valid** IP parameters so that the firmware can be updated. A functional Factory Manager or another TFTP server are also required.

A suitable version of Factory Manager can be downloaded at www.phoenixcontact.net/download.

Proceed as follows to update the software:

- Save the desired firmware/software in the download directory of your TFTP server. If using Factory Manager, the path for standard installation is as follows: "C:\Program Files\Phoenix Contact\Factory Manager\Version 2.3\download".
- Start Factory Manager and check whether the TFTP server is activated.

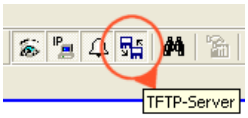

Figure 3-11 Factory Manager with activated TFTP server

- Start WBM for the switch and call the "Software Update" page (...General Configuration/Software Update).
- Enter the IP address of the computer on which Factory Manager is installed in the "TFTP Server IP Address" field.
- Then enter the complete file name of the firmware file in the "Downloadable File Name" field, but do not enter the path (i.e., no drive, no folder).

- Enter the device password (default: "private") and click on "Apply".

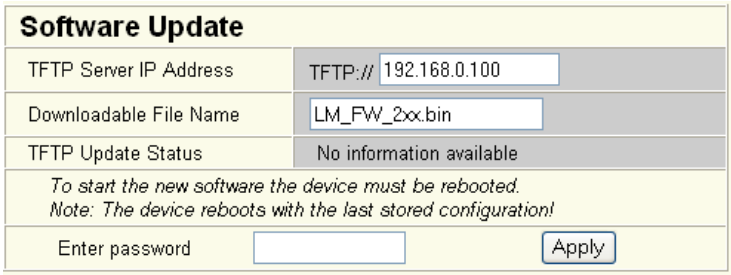

Figure 3-12 Web interface with the update parameters

The following window appears after a few moments.

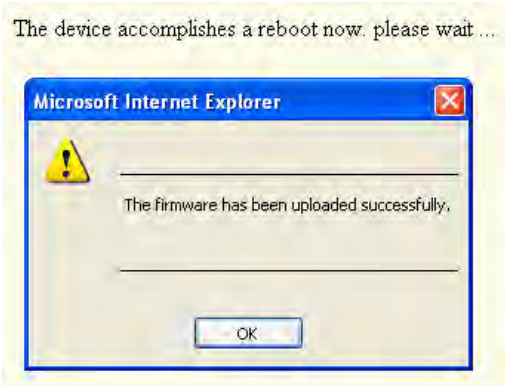

Figure 3-13 Message following successful update

- Close and restart WBM.

Firmware update can take several minutes. You can monitor the download progress in the Factory Manager message window (25%, 50%, 75%, 100%). Always wait approximately two minutes until all the LEDs have lit up and the device is available again after booting.

There are no assurances that all existing configuration data will be retained after a firmware update/downgrade. Therefore, please check the configuration settings or reset the device to the settings default upon delivery.

NOTE: A voltage failure during a firmware update results in the destruction of the firmware on the LMS. An update via XMODEM is required, see "Starting with faulty software" on page 3-56.

"Change Password" menu

This option can be used to specify the current password and then enter a new, unique password. By default upon delivery, the password is "private" (please note that it is case-sensitive). For security reasons, the input fields do not display your password, but instead "*******" is displayed.

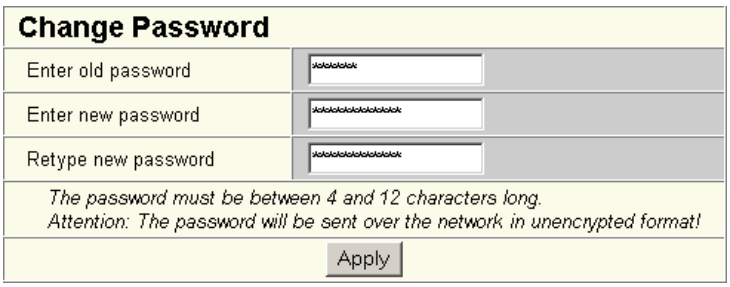

Figure 3-14 "Change Password" web page

The password must be between four and twelve characters long. Please note that the password is always transmitted via the network in unencrypted format.

Forgotten your password?
Call the Phoenix Contact phone number listed in the Appendix, making sure you have the device serial number and MAC address to hand.

"User Interfaces" menu

The following actions can be performed here:

- Activation/deactivation of the web server.
- Activation/deactivation of the SNMP agent.
- Activation/deactivation of the configuration pages for redundancy.

With the activation/deactivation of the configuration pages under "User Interfaces", only the web pages for configuring the selected functions are enabled/disabled in the WBM menu.

User Interfaces

Web Server	○ Disable	⦿ Enable
SNMP Agent	○ Disable	⦿ Enable

Be sure to have access after changing Web Server/SNMP Agent to disable.

Web pages

Redundancy	○ Disable	⦿ (Rapid) Spanning Tree

Enabling the module "Rapid Spanning Tree" you get additionalweb pages to activate the Rapid Spanning Tree Protocol and to configure it.Setting the redundancy mode to "disable" the Rapid Spanning Tree configuration will be restored to the default state and the Rapid Spanning Tree Protocol will be deactivated!
*Look for menu item **Switch Station / Rapid Spanning Tree**.*

Multicast Filtering	⦿ Disable	○ Enable

Enabling the module "Multicast Filtering" you get additionalweb pages to modify various multicast adjustments.Disabling the web pages has no influence on the multicast configuration.
Look for menu item Switch Station / Multicast.

Virtual LAN	○ Disable	⦿ Enable

Enabling the module "Virtual Local Area Networks (VLAN)" you get additional web pages to modify various VLAN adjustments.
*Look for menu item **Switch Station / VLAN**.*

DHCP Server	○ Disable	⦿ Enable

Enabling the module "DHCP Server" you get an additional web page to modify various DHCP Server adjustments.
*Look for menu item **Switch Station / DHCP Server**.*

Enter password [ ] Apply

Figure 3-15 "User Interfaces" web page

"General Configuration\Config. Management" menu

This table is used to view all parameters that are required to save the active configuration or load a new configuration, and to modify them (by entering a valid password). It can also be used to restart the system with the relevant configuration.

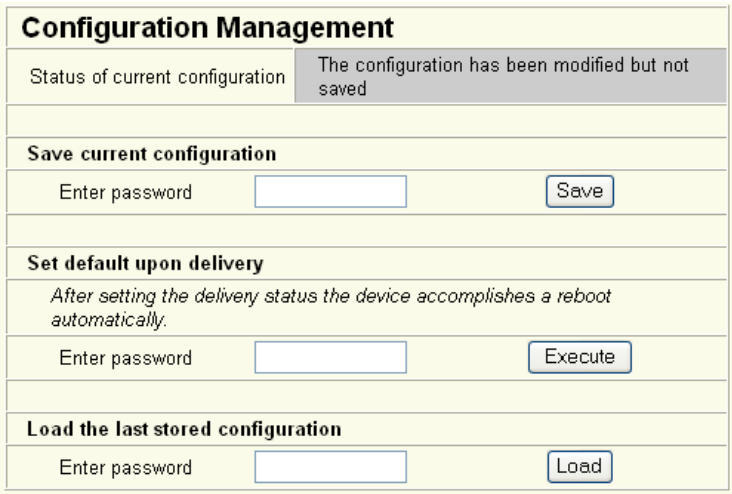

Figure 3-16 "Configuration Management" web page

Possible states for "Status of current configuration":

- The configuration has been modified but not saved.
- Saving the current configuration.
- The current configuration is equal to the saved one in the non volatile memory of the switch.
- The current configuration was saved.

If the new configuration is not activated by a reset after a configuration download, the "Save current configuration" command overwrites the previously loaded configuration and instead saves the active configuration of the LMS.

Set default upon delivery

This option can be used to reset the switch to its default settings (default upon delivery) by entering a valid password.

Figure 3-17 "Set default upon delivery" web page

WBM can only be called using a valid IP address. Once the switch has been reset to its default settings, it has **no** valid IP address.

Load the last stored configuration

This option can be used to reload the last configuration stored on either the device or the PC. All modifications made to the configuration since it was last saved are lost.

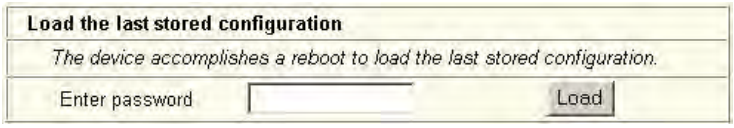

Figure 3-18 "Load the last stored configuration" web page

"File Transfer" menu

This option can be used to save your device configuration on a PC or to operate the switch using a stored configuration.

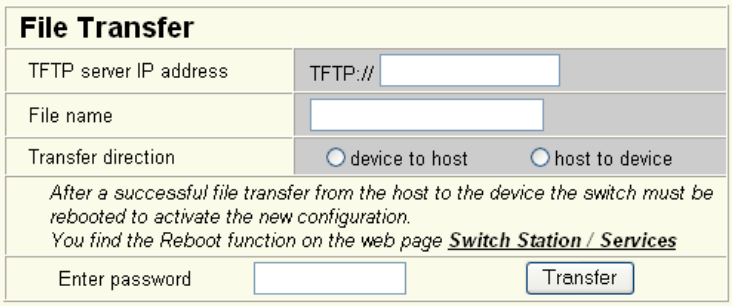

Figure 3-19 "File Transfer" web page

When a configuration is uploaded from the switch to a PC, the last saved version is transmitted. If you want to transmit the active configuration, first save it again ("Save current configuration" function).

When a configuration is downloaded from the PC to a switch, the new configuration is only activated once the switch has been reset.

The use of a configuration file does not affect an existing ("old") password.

Device replacement

Configuration using a configuration file is used when replacing devices. To duplicate devices using a configuration file, observe the following:

- Create a point-to-point connection between a switch and the management station.
- Load the configuration file on the switch.
- Reset the switch.
- Adjust the IP parameters.
- Save the configuration ("Save current configuration" function).

The duplicated switch can now be operated in the network using the adjusted IP parameters.

3.2.4.1 Switch Station

Services

Reboot To trigger a reboot via the web interface, enter a valid password. Save the configuration beforehand, so that configuration modifications are retained or can be activated via a restart.

"DHCP Server" menu

On this page, activate/deactivate the DHCP server and configure the settings accordingly.

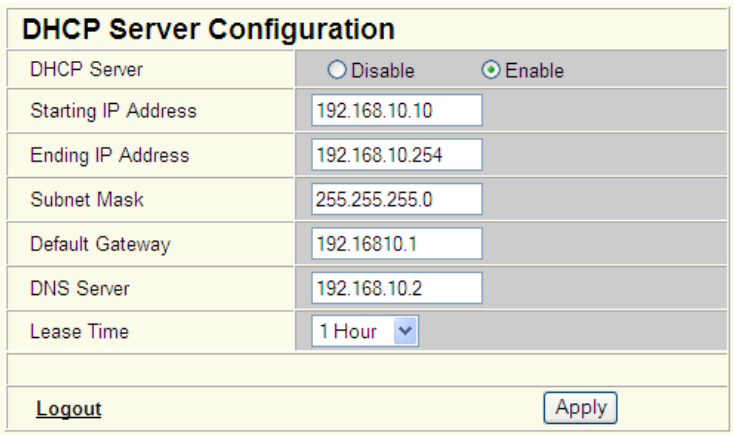

Figure 3-20 "DHCP Server" web page

As a DHCP server, the switch can use the Dynamic Host Configuration Protocol (DHCP) to assign the network configuration to the connected clients.

The IP address area of the DHCP server may include a maximum of 254 clients.

Starting/Ending IP Address

Specifies the area from which the DHCP server/switch assigns IP addresses.

Subnet Mask

Specifies the subnet mask for the network segment.

Default Gateway

Specifies the default gateway/router for switching to other network segments.

DNS Server

Specifies the address of the Domain Name Server.

Lease Time

The lease time is a period of time during which the client may use the assigned IP configuration.

The options are as follows:

– 1 hour
– 1 day
– 1 week
– 1 month

"Ports" menu

Port Table

Overview of all available ports. Clicking on the relevant port number opens a port-specific page ("Port Configuration").

Port Table

Port	Type	Port Status	Link State
1	TX 10/100	enable	100 MBit FD
2	TX 10/100	enable	100 MBit FD
3	TX 10/100	enable	100 MBit FD
4	TX 10/100	enable	100 MBit FD

Figure 3-21 "Port Table" web page

"Port Cfg. Table" menu

This menu provides an overview of the important configuration settings for all ports and also offers the option of setting the status, transmission mode, and link monitoring function for all existing ports.

Port Configuration Table

Port	Status	Modus	Link Monitoring
1	enable	AutoNeg	disable
2	enable	AutoNeg	disable
3	enable	AutoNeg	disable
4	enable	AutoNeg	disable
5	enable	AutoNeg	disable
6	enable	AutoNeg	disable
7	enable	AutoNeg	disable
8	enable	AutoNeg	disable

Enter password Apply

Figure 3-22 "Port Configuration Table" web page

Port Configuration

Individual configuration option for each port. To view detailed data traffic statistics for the selected port, click on "Port Statistics".

Even if the port is switched off, the Link LED for the port remains active.

Port Configuration

Port Number	2
Type	TX 10/100
Port Name	Port 2
Status	○ Disable ● Enable
Priority Level	● Low ○ High
Link State	connected
Negotiation Mode	auto
Speed	100 MBit/s
Duplex Mode	full
Port Modus	*Note for the installation of Ethernet cables: Auto Crossover is supported only in the Auto Negotiation mode!* ● Auto Negotiation ○ 10 MBit / Half Duplex ○ 10 MBit / Full Duplex ○ 100 MBit / Half Duplex ○ 100 MBit / Full Duplex
Link Monitoring	● Disable ○ Enable
Enter password	Apply
Port Configuration of port 2: General | **Security**	
Port Statistics of port 2: **General**	

Figure 3-23 "Port Configuration" web page

"Port Statistics" menu

This menu provides detailed statistical information about the volume of data for each individual port. On this page, additional counter states can be set to zero for all ports.

Port Statistics

Port Number	1
Packets	126
up to 64 Octets	94
65 to 127 Octets	19
128 to 255 Octets	0
256 to 511 Octets	13
512 to 1023 Octets	0
1024 to 1518 Octets	0
Broadcast	6
Multicast	7
Octets	12737
Fragments	0
Undersized Packets	0
Oversized Packets	0
CRC Alignment Errors	0
Drop Events	0
Jabbers	0
Collisions	0

Clear counters

You can set the statistic counters of all switch ports to zero.

Enter password [ ] Clear

Port Configuration of port 1: **General** | **RSTP**

Figure 3-24 "Port Statistics" web page

"Port Mirroring" menu

Activation/deactivation and setting of port mirroring. Port mirroring is used to passively read input or output data that is being transmitted via a selected port. To do this a measuring instrument (PC) is connected to the destination port, which records the data, yet must not itself be activated.

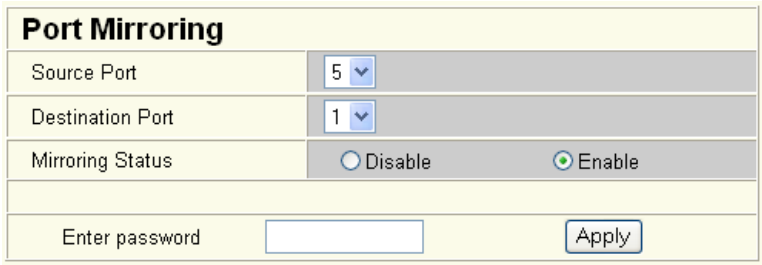

Figure 3-25 "Port Mirroring" web page

WBM prevents the same ports from being set, i.e., the source port and destination port must differ.

The port capacity is calculated according to the set transmission parameters. Example: A source port is operated at 100 Mbps and reaches a capacity of 5%. The destination port is operated at 10 Mbps. Therefore, with the same volume of data the destination port reaches a capacity of 50%.

"Diagnostics/Display" menu

The "Display" menu contains some status information about the switch.

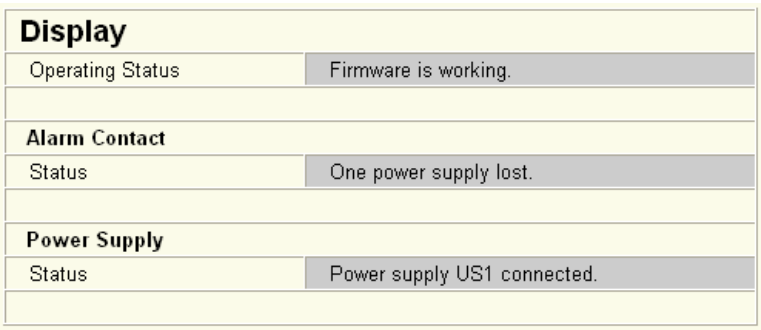

Figure 3-26 "Display" menu

"Diagnostics\Alarm Contact" menu

Here, you can set whether and for which events the alarm contact can be used.

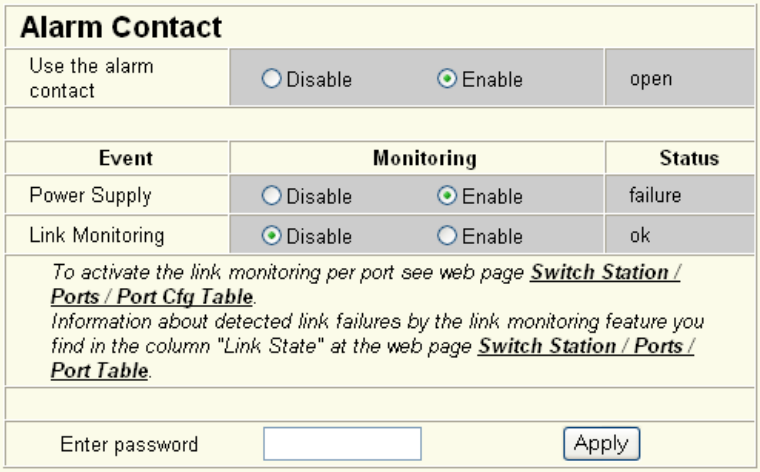

Figure 3-27 "Alarm Contact" web page

Click on the "Switch Station / Ports / Port Table" link (on the "Alarm Contact" page in WBM) to access the port configuration page. Here, the ports to be monitored must be explicitly enabled for link monitoring.

"Utilization" menu

Here, the network capacity of each individual port is displayed as a bar graph. The display is automatically updated according to the refresh interval.

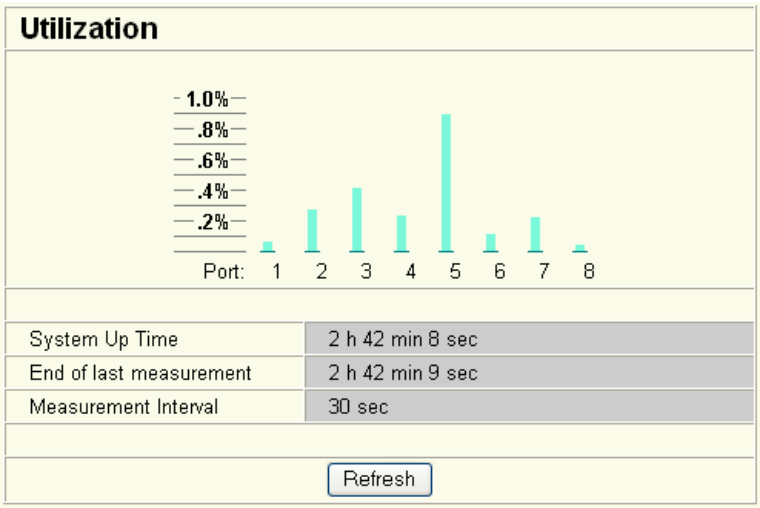

Figure 3-28 "Utilization" web page

Please note that the % scale is spread according to the capacity utilization.

The port capacity is calculated according to the set transmission parameters. Example: A source port is operated at 100 Mbps and reaches a capacity of 5%. The destination port is operated at 10 Mbps. Therefore, with the same volume of data the destination port reaches a capacity of 50%.

3.2.4.2 Rapid Spanning Tree

For information about (Rapid) Spanning Tree, please refer to Section 4 "Rapid Spanning Tree".

3.3 Simple Network Management Protocol (SNMP)

3.3.1 General function

SNMP is a manufacturer-independent standard for Ethernet management and defines commands for reading and writing error and status message information and formats. SNMP is also a structured model, which comprises agents and their relevant MIB (Management Information Base) and a manager. The manager is a software tool, which is executed on a network management station.

The agents are located inside switches, bus terminal modules, routers, and other devices that support SNMP. The task of the agents is to collect and provide data in the MIB. The manager regularly requests and displays this information. The devices can be configured by writing data from the manager to the MIB. In the event of an emergency, the agents can also send messages (traps) directly to the manager.

All configuration modifications, which are to take effect after an LMS restart, must be saved permanently using the "flWorkFWCtrlConfSave" object.

SNMP interface

All managed Factoryline components have an SNMP agent. This agent manages Management Information Base II (MIB 2) according to RFC1213 MIB, Bridge MIB, IANAifType MIB, RSTP MIB, RFC1907 MIB, and private SNMP objects from Phoenix Contact.

Network management stations, such as a PC with Factory Manager, can read and modify configuration and diagnostic data from network devices via the Simple Network Management Protocol (SNMP). In addition, any SNMP tools or network management tools can be used to access Factoryline products via SNMP. The MIBs supported by the relevant device must be made available to the SNMP management tools.

On the one hand, these are globally valid MIBs, which are specified and described in RFCs (Request for Comments). This includes, for example, MIB2 according to RFC1213, which is supported by all SNMP-compatible network devices. On the other hand, manufacturers can specify their own private SNMP objects, which are then assigned to a private manufacturer area in the large SNMP object tree. Manufacturers are then responsible for their own private (enterprise) areas, i.e., they must ensure that only one object is assigned to an object ID (object name and parameters) and can be published. If an object is no longer needed, it can be labeled as "expired", but it cannot be reused with other parameters under any circumstances.

Phoenix Contact provides notification of ASN1 SNMP objects by publishing their descriptions on the Internet.

Reading SNMP objects is not password-protected. However, a password is required for read access in SNMP, but this is set to "public", which is usual for network devices, and cannot be modified. By default upon delivery, the password for write access is "private" and can be changed by the user.

SNMP, the web interface, and the serial terminal all use the same password, which can be changed by the user.

Another benefit for the user is the option of sending traps using the Simple Network Management Protocol.

Management Information Base (MIB)

Database which contains all the data (objects and variables) required for network management.

Agent

An agent is a software tool, which collects data from the network device on which it is installed, and transmits this data on request. Agents reside in all managed network components and transmit the values of specific settings and parameters to the management station. On a request from a manager or on a specific event, the agent transmits the collected information to the management station.

Traps

Traps are spontaneous SNMP alarm or information messages, which are sent by an SNMP-compatible device when specific events occur. Traps are transmitted with maximum priority to various addresses (if required) and can then be displayed by the management station in plain text. The IP addresses that are to receive these traps (trap targets/receivers) must be set by the user on the relevant device. The following traps are used:

trapColdStart

OID	1.3.6.1.6.3.1.1.5.1
Description	Sent when the switch is started

trapPortUp/Down

OID	1.3.6.1.6.3.1.5.3/4
Description	Sent when a port is enabled or disabled.

3.3.2 Schematic view of SNMP management

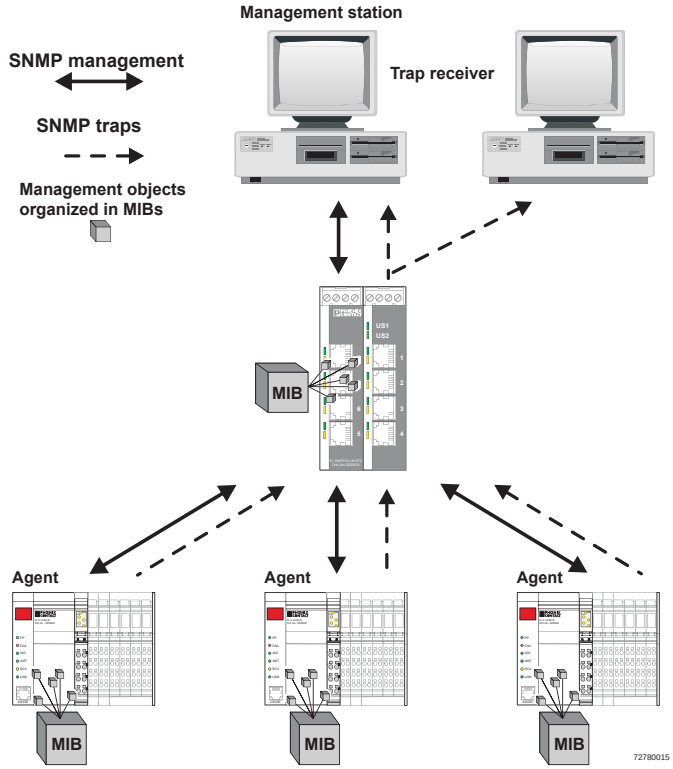

Figure 3-29 Schematic view of SNMP

3.3.2.1 Tree structure of the MIB

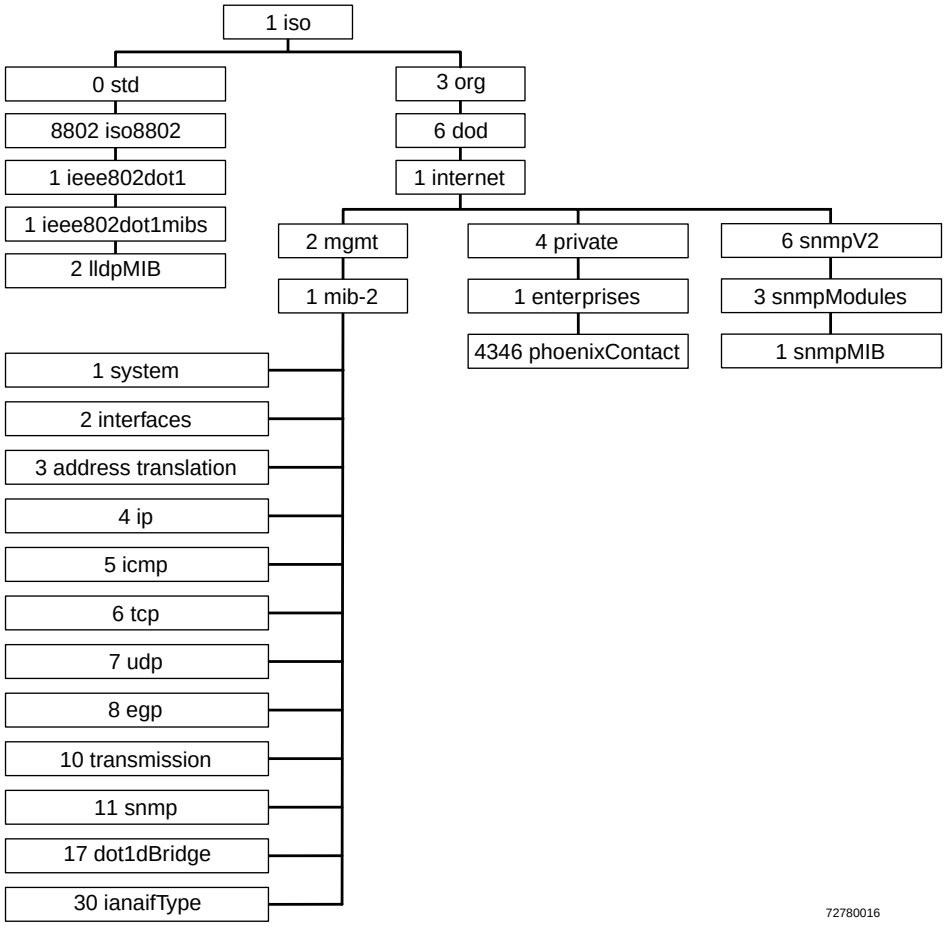

Figure 3-30 Tree structure of the MIB

Not all devices support all object classes. If an unsupported object class is requested, "not supported" is generated. If an attempt is made to modify an unsupported object class, the message "badValue" is generated.

3.3.3 RFC1213 MIB - MIB II

3.3.3.1 System group (1.3.6.1.2.1.1)

The system group has mandatory characters for all systems. It contains system-specific objects. If an agent does not have a value for a variable, the response is a string with length 0.

(1) system
- (1) sysDescr
- (2) sysObjectID
- (3) sysUpTime
- (4) sysContact
- (5) sysName
- (6) sysLocation
- (7) syswitch sta
-
- (8) sysORLastChange

sysDescr

OID	1.3.6.1.2.1.1.1.0
Syntax	Octet string (size: 0 - 255)
Access	Read
Description	A textual description of the entry. The value should contain the full name and version number of: - Type of system hardware - Operation system software - Network software The description may only consist of ASCII characters that can be printed.

sysObjectID

OID	1.3.6.1.2.1.1.2.0
Syntax	Object identifier
Access	Read
Description	The authorization identification for the manufacturer of the network management subsystem, which is integrated in this device. This value is located in the SMI enterprises subtree (1.3.6.1.4.1) and describes which type of device is being managed. For example, if the manufacturer "Phoenix Contact GmbH" is assigned subtree 1.3.6.1.4.1.4346, it can then assign its bridge the identifier 1.3.6.1.4.1.4346.2.1.

sysUpTime

OID	1.3.6.1.2.1.1.3.0
Syntax	TimeTicks
Access	Read
Description	The time in hundredths of seconds since the last network management unit reset.

sysContact

OID	1.3.6.1.2.1.1.4.0
Syntax	Octet string (size: 0 - 255)
Access	Read and write
Description	The textual identification of the contact person for these managed nodes and information on how this person can be contacted.

sysName

OID	1.3.6.1.2.1.1.5.0
Syntax	Octet string (size: 0 - 255)
Access	Read and write
Description	A name for this node assigned by the administrator. According to the agreement, this is the fully qualifying name in the domain.

sysLocation

OID	1.3.6.1.2.1.1.6.0
Syntax	Octet string (size: 0 - 255)
Access	Read and write
Description	The physical location of this node (e.g., "Hall 1, 3rd floor").

sysServices

OID	1.3.6.1.2.1.1.7.0
Syntax	Integer (0 - 127)
Access	Read
Description	This value indicates a number of services that this device offers. It is the sum of several calculations. For every layer of the OSI reference model, there is a calculation in the form of (2^{L-1}), where L indicates the layer. For example: A node which primarily executes line routing functions has the value $(2^{3-1}) = 4$. A node which is a host and provides application services has the value $(2^{4-1}) + (2^{7-1}) = 72$.

sysORLastChange

OID	1.3.6.1.2.1.1.8
Syntax	TimeTicks
Access	Read
Description	Indicates the value of the sysUpTime during the last system modification.

3.3.3.2 Interface group (1.3.6.1.2.1.2)

The interface group contains information about device interfaces.

```
(2) interfaces
    -- (1) ifNumber
    -- (2) ifTable
            -- (1) if Entry
                -- (1) ifIndex
                -- (2) ifDescr
                -- (3) ifType
                -- (4) ifMtu
                -- (5) ifSpeed
                -- (6) ifPhysAddress
                -- (7) ifAdminStatus
                -- (8) ifOperStatus
                -- (9) ifLastChange
                -- (10) ifInOctets
                -- (11) ifInUcastPkts
                -- (12) ifInNUcastPkts
                -- (13) ifInDiscards
                -- (14) ifInErrors
                -- (15) ifInUnknownProtos
                -- (16) ifOutOctets
                -- (17) ifOutUcastPkts
                -- (18) ifOutNUcastPkts
                -- (19) ifOutDiscards
                -- (20) ifOutErrors
                -- (21) ifOutQLen
                -- (22) ifSpecific
```

3.3.4 Bridge MIB (1.3.6.1.2.1.17)

3.3.4.1 dot1dBase (1.3.6.1.2.1.17.1)

The dot1dBase group contains bridge-specific information.

```
(1) dot1dBaseBridgeAddress
(2) dot1dBaseNumPorts
(3) dot1dBasePortType
(4) dot1dBasePortTable
    -- dot1dBasePortEntry
            -- (1) dot1dBasePort
            -- (2) dot1dBasePortIfIndex
            -- (3) dot1dBasePortPortCircuit
            -- (4) dot1dBasePortDelayExceededDiscards
            -- (5) dot1dBasePortMtuExceededDiscards
```

3.3.4.2 dot1dStp (1.3.6.1.2.1.17.2)

-- (1) dot1dStpProtocolSpecification
-- (2) dot1dStpPriority
-- (3) dot1dStpTimeSinceTopologyChange
-- (4) dot1dStpTopChanges
-- (5) dot1dStpDesignateRoot
-- (6) dot1dStpRootCost
-- (7) dot1dStpRootPort
-- (8) dot1dStpMaxAge
-- (9) dot1dStpHelloTime
-- (10) dot1dStpHoldTime
-- (11) dot1dStpForwardDelay
-- (12) dot1dStpBridgeMaxAge
-- (13) dot1dStpBridgeHelloTime
-- (14) dot1dStpBridgeForwardDelay
-- (15) dot1dStpPortTable
  -- (1) dot1dStpPortEntry
    -- (1) dot1dStpPort
    -- (2) dot1dStpPortPriority
    -- (3) dot1dStpPortState
    -- (4) dot1dStpPortEnable
    -- (5) dot1dStpPortPathCost
    -- (6) dot1dStpPortDesignatedRoot
    -- (7) dot1dStpPortDesignatedCost
    -- (8) dot1dStpPortDesignatedBridge
    -- (9) dot1dStpPortDesignatedPort
    -- (10) dot1dStpPortForwardTransitions
    -- (11) dot1sStpPortProtocolMigration
    -- (12) dot1dStpPortAdminEdgePort
    -- (13) dot1dStpPortOperEdgePort
    -- (14) dot1dStpPortAdminPointToPoint
    -- (15) dot1dStpPortOperPointToPoint
    -- (16) dot1dStpPortAdminPathCost

3.3.4.3 dot1dTp (1.3.6.1.2.1.17.4)

The dot1dTp group contains bridge-specific information.

(1) dot1dTpLearnedEntryDiscards
(2) dot1dTpAgingTime
(3) dot1dTpFdbTable
  -- (1) dot1dTpFdbEntry
    -- (1) dot1dTpFdbAddress
    -- (2) dot1dTpFdbPort
    -- (3) dot1dTpFdbStatus
(4) dot1dTpPortTable
  -- dot1dTpPortEntry

```
-- (1) dot1dTpPort
-- (2) dot1dTpPortMaxInfo
-- (3) dot1dTpPortInFrames
-- (4) dot1dTpPortOutFrames
-- (5) dot1dTpPortInDiscards
```

3.3.5 Private MIBs

The private MIBs for the LMS from Phoenix Contact can be found under object ID 1.3.6.1.4.1.4346. The LMS MIB contains the following groups:

– pxcModules (OID = 1.3.6.1.4.1.4346.1)
– pxcGlobal (OID = 1.3.6.1.4.1.4346.2)
– pxcFactoryLine (OID = 1.3.6.1.4.1.4346.11)

All configuration modifications, which are to take effect after an LMS restart, must be saved permanently using the "flWorkFWCtrlConfSave" object.

MIB tree

The private MIB from Phoenix Contact is integrated in the MIB tree as follows (see red arrow).

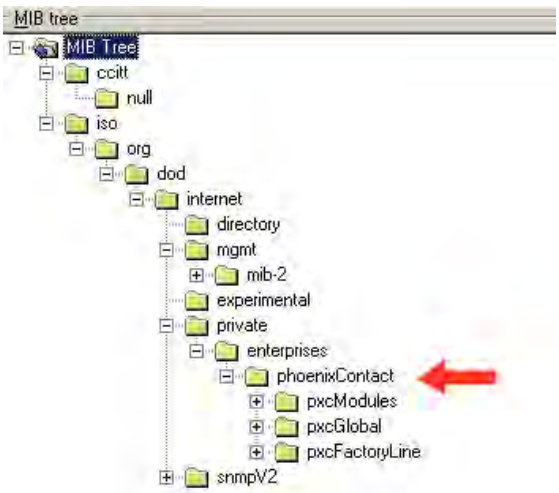

Figure 3-31 MIB tree

3.3.5.1 pxcModules OID = 1.3.6.1.4.1.4346.1

flMSwitchMModule

OID 1.3.6.1.4.1.4346.1.8

The object contains information about the manufacturer (address, phone number, etc.).

3.3.5.2 pxcGlobal OID = 1.3.6.1.4.1.4346.2

pxcBasic

OID 1.3.6.1.4.1.4346.2.1

pxcBasicName

OID	1.3.6.1.4.1.4346.2.1.1
Syntax	Display string
Access	Read
Description	Contains the manufacturer's name: Phoenix Contact GmbH & Co. KG.

pxcBasicDescr

OID	1.3.6.1.4.1.4346.2.1.2
Syntax	Display string
Access	Read
Description	Contains the manufacturer's name and address: Phoenix Contact GmbH & Co. KG, D-32823 Blomberg.

pxcBasicURL

OID	1.3.6.1.4.1.4346.2.1.3
Syntax	Display string
Access	Read
Description	Contains the manufacturer's web address: http://www.phoenixcontact.com.

3.3.5.3 pxcFactoryLine OID = 1.3.6.1.4.1.4346.11

flGlobal

OID	1.3.6.1.4.1.4346.11.1

flBasic

OID	1.3.6.1.4.1.4346.11.1.1

flBasicName

OID	1.3.6.1.4.1.4346.11.1.1.1
Syntax	Display string
Access	Read
Description	Contains the name of the product group: Factoryline.

flBasicDescr

OID	1.3.6.1.4.1.4346.11.1.1.2

Syntax	Display string
Access	Read
Description	Contains a brief description of the product group: Ethernet Installation System.
	flBasicURL
OID	1.3.6.1.4.1.4346.11.1.1.3
Syntax	Display string
Access	Read
Description	Contains a specific URL for the product group: www.factoryline.de.
	flBasicCompCapacity
OID	1.3.6.1.4.1.4346.11.1.1.4
Syntax	Integer32 (1 ... 1024)
Access	Read
Description	Contains the number of different components that can be managed with this device.
	flComponents
OID	1.3.6.1.4.1.4346.11.1.2
	flComponentsTable
OID	1.3.6.1.4.1.4346.11.1.2.1
	flComponentsTableEntry

OID	1.3.6.1.4.1.4346.11.1.2.1.1
Syntax	
Access	
Description	Generates a table containing information about a Factoryline component.
flComponentsIndex	
OID	1.3.6.1.4.1.4346.11.1.2.1.1.1
Syntax	Integer32 (1 ... 1024)
Access	Read
Description	Identifies the components for which this entry contains information.
flComponentsName	
OID	1.3.6.1.4.1.4346.11.1.2.1.1.2
Syntax	Display string
Access	Read
Description	Indicates the device designation of the component.
flComponentsDescr	

OID	1.3.6.1.4.1.4346.11.1.2.1.1.3
Syntax	Display string
Access	Read
Description	Contains a brief description of the component.
flComponentsURL	
OID	1.3.6.1.4.1.4346.11.1.2.1.1.4
Syntax	Display string
Access	Read
Description	Contains the URL of a Phoenix Contact website with additional information.
flComponentsOrderNumber	
OID	1.3.6.1.4.1.4346.11.1.2.1.1.5
Syntax	Display string
Access	Read
Description	Contains the order number of the component.

flWorkDevice

OID 1.3.6.1.4.1.4346.11.11

flWorkBasic

OID 1.3.6.1.4.1.4346.11.11.1

flWorkBasicName

OID	1.3.6.1.4.1.4346.11.11.1.1
Syntax	Display string
Access	Read/write
Description	Contains the device name (corresponds to "sysName" from MIB2), which the user assigned to the device.

Check this entry following a firmware update, it may have been overwritten with default values.

flWorkBasicDescr

OID	1.3.6.1.4.1.4346.11.11.1.2
Syntax	Display string
Access	Read/write
Description	Contains a short description (corresponds to "sysDescr" from MIB2), which the user assigned to the device.

Check this entry following a firmware update, it may have been overwritten with default values.

flWorkBasicURL

OID	1.3.6.1.4.1.4346.11.11.1.3
Syntax	Display string
Access	Read
Description	Contains the URL of the device-specific web page for WBM in the form of the currently set IP address.

flWorkBasicSerialNumber

OID	1.3.6.1.4.1.4346.11.11.1.4
Syntax	Octet string (12)
Access	Read
Description	Contains the serial number of the device.

flWorkBasicHWRevision

OID	1.3.6.1.4.1.4346.11.11.1.5
Syntax	Octet string (4)
Access	Read
Description	Contains the hardware version of the device.

flWorkBasicPowerStat

OID	1.3.6.1.4.1.4346.11.11.1.6
Syntax	Integer32 (1 ... 1024)
Access	Read
Description	Contains status information about the connected supply voltages: - Unknown 1 - Supply voltage 1 OK 3 - Supply voltage 2 OK 4 - Supply voltage 1 and 2 OK 5

flWorkBasicCompMaxCapacity

OID	1.3.6.1.4.1.4346.11.11.1.11
Syntax	Integer 32
Access	Read
Description	Contains the maximum number of interfaces that can be connected in theory.

flWorkBasicCompCapacity

OID	1.3.6.1.4.1.4346.11.11.1.12
Syntax	Integer 32
Access	Read
Description	Contains the number of interfaces actually connected.

flWorkComponentsGroup

OID	1.3.6.1.4.1.4346.11.11.2

flWorkComponentsEntry

OID	1.3.6.1.4.1.4346.11.11.2.1.1
Syntax	
Access	
Description	Generates a table containing information about this component.
flComponentsIndex	
OID	1.3.6.1.4.1.4346.11.11.2.1.1.1
Syntax	Integer32 (1 ... 1024)
Access	Read
Description	Identifies the components for which this entry contains information.
flWorkComponentsOID	
OID	1.3.6.1.4.1.4346.11.11.2.1.1.2
Syntax	Object identifier
Access	Read
Description	Indicates the corresponding component in the "flComponents" group.
flWorkComponentsURL	
OID	1.3.6.1.4.1.4346.11.11.2.1.1.3
Syntax	Display string
Access	Read
Description	Contains the IP address that can be used to access the web server for this device.
flWorkComponentsDevSign	
OID	1.3.6.1.4.1.4346.11.11.2.1.1.4
Syntax	Integer (0 ... 255)
Access	Read
Description	Contains the interface designation assigned by the manufacturer.

flWorkNet

OID 1.3.6.1.4.1.4346.11.11.4

flWorkNetIfParameter

OID 1.3.6.1.4.1.4346.11.11.4.1

flWorkNetIfParamPhyAddress

OID	1.3.6.1.4.1.4346.11.11.4.1.1
Syntax	MAC address
Access	Read
Description	Contains the MAC address of the switch.

flWorkNetIfParamIPAddress

OID	1.3.6.1.4.1.4346.11.11.4.1.2
Syntax	IP address
Access	Read/write
Description	Contains the current IP address of the LMS. Changes only take effect once the "flWorkNetIfParamSave" object has been executed.

The "flWorkNetIfParamAssignment" object must be set to static (1), otherwise objects cannot be written.

flWorkNetIfParamSubnetmask

OID	1.3.6.1.4.1.4346.11.11.4.1.3
Syntax	IP address
Access	Read/write
Description	Contains the current subnet mask of the LMS. Changes only take effect once the "flWorkNetIfParamSave" object has been executed.

The "flWorkNetIfParamAssignment" object must be set to static (1), otherwise objects cannot be written.

flWorkNetIfParamGWIpAddress

OID	1.3.6.1.4.1.4346.11.11.4.1.4
Syntax	IP address
Access	Read/write
Description	Contains the IP address of the current default gateway/router of the LMS. Changes only take effect once the "flWorkNetIfParamSave" object has been executed.

The "flWorkNetIfParamAssignment" object must be set to static (1), otherwise objects cannot be written.

flWorkNetIfParamStatus

OID	1.3.6.1.4.1.4346.11.11.4.1.5
Syntax	Integer32 (1 ... 1024)
Access	Read
Description	Indicates whether the IP parameters have been modified but not saved:

- No change	1
- Address setting modified, but not yet activated	2

Address settings must be saved permanently using the "flWorkFWCtrlConfSave" object.

flWorkNetIfParamSave

OID	1.3.6.1.4.1.4346.11.11.4.1.6
Syntax	Integer
Access	Read/write
Description	Provides the option of saving modified IP parameters or undoing the modifications: - Undo modification 1 - Activate modification 2

Address settings must be saved permanently using the "flWorkFWCtrlConfSave" object.

flWorkNetIfParamAssignment

OID	1.3.6.1.4.1.4346.11.11.4.1.7
Syntax	Integer
Access	Read/write
Description	Provides the option of modifying the assignment mechanism for IP parameters. Takes effect after an LMS restart: - Static IP address 1 - Assignment via BootP (default) 2

Modifications to the assignment mechanism also affect the management functions via the web interface and via RS-232.

Address settings must be saved permanently using the "flWorkFWCtrlConfSave" object.

flWorkNetPort

OID 1.3.6.1.4.1.4346.11.11.4.2

flWorkNetPortCapacity

OID	1.3.6.1.4.1.4346.11.11.4.2.1
Syntax	Integer32 (1 ... 1024)
Access	Read
Description	Contains the number of available ports depending on the configuration of the LMS.

flWorkNetPortTable

OID 1.3.6.1.4.1.4346.11.11.4.2.2

flWorkNetPortEntry

OID	1.3.6.1.4.1.4346.11.11.4.2.2.1
Description	Generates a table with a detailed description of the port configuration.
flWorkNetPortIndex	
OID	1.3.6.1.4.1.4346.11.11.4.2.2.1.1
Syntax	Integer32 (1 ... 1024)
Access	Read

Description	Specifies the port number of the selected port.
flWorkNetPortLinkState	
OID	1.3.6.1.4.1.4346.11.11.4.2.2.1.2
Syntax	Integer
Access	Read
Description	Indicates the port status: Connected 1 Not connected 2
flWorkNetPortSpeed	
OID	1.3.6.1.4.1.4346.11.11.4.2.2.1.3
Syntax	Gauge32
Access	Read
Description	Contains the data transmission speed of the selected port in bps.
flWorkNetPortDuplexMode	
OID	1.3.6.1.4.1.4346.11.11.4.2.2.1.4
Syntax	INTEGER
Access	Read
Description	Contains the duplex mode of the selected port: No link 0 Full duplex 1 Half duplex 2
flWorkNetPortNegotiation	
OID	1.3.6.1.4.1.4346.11.11.4.2.2.1.5
Syntax	INTEGER
Access	Read
Description	Contains information indicating whether auto negotiation is active: Active 1 Manual 2
flWorkNetPortName	
OID	1.3.6.1.4.1.4346.11.11.4.2.2.1.6
Syntax	Octet string (0 ... 16)
Access	Read/write
Description	Contains the "name" of the port assigned by the user, e.g., "Robot 1".
flWorkNetPortEnable	
OID	1.3.6.1.4.1.4346.11.11.4.2.2.1.7
Syntax	Integer
Access	Read/write
Description	Here you can disable the port: Port disabled 1 Port enabled 2
flWorkNetPortModus	
OID	1.3.6.1.4.1.4346.11.11.4.2.2.1.9

Syntax	Integer32 (0 ... 1024)
Access	Read/write
Description	This object can be used to set the transmission mode for the relevant port: Auto negotiation 1 10 Mbps half duplex 2 10 Mbps full duplex 3 100 Mbps half duplex 4 100 Mbps full duplex 5 Fiberglass FX ports only support operation at 100 Mbps full duplex (5). The autocrossing function is only active when auto negotiation is enabled. If the transmission speed or transmission mode is set to a fixed value, the autocrossing function is disabled.
flWorkNetPortIfIndex	
OID	1.3.6.1.4.1.4346.11.11.4.2.2.1.11
Syntax	Integer32 (0 ... 1024)
Access	Read
Description	Specifies the index of the port according to IEEE 802.3ad.
flWorkNetPortType	
OID	1.3.6.1.4.1.4346.11.11.4.2.2.1.13
Syntax	Octet string
Access	Read
Description	Specifies the medium of this port.
flWorkNetPortModuleName	
OID	1.3.6.1.4.1.4346.11.11.4.2.2.1.14
Syntax	Octet string
Access	Read
Description	Specifies the "name" of the module.
flWorkNetPortInterfaceName	
OID	1.3.6.1.4.1.4346.11.11.4.2.2.1.15
Syntax	Octet string
Access	Read
Description	Specifies the "name" of the interface.
flWorkNetPortStpMode	
OID	1.3.6.1.4.1.4346.11.11.4.2.2.1.18
Syntax	Integer
Access	Read
Description	Specifies the port mode during redundancy operation: Spanning Tree 1 Rapid Spanning Tree 2

flWorkFirmware

OID	**1.3.6.1.4.1.4346.11.11.11**
	flWorkFWInfo
OID	1.3.6.1.4.1.4346.11.11.11.1

flWorkFWInfoVersion

OID	1.3.6.1.4.1.4346.11.11.11.1.1
Syntax	Octet string
Access	Read
Description	Contains the firmware version as a string. Example for Version "3.97": 0x33, 0x2e, 0x39, 0x37.

flWorkFWInfoState

OID	1.3.6.1.4.1.4346.11.11.11.1.2
Syntax	Octet string (6)
Access	Read
Description	Contains the firmware release as a string. Example for "beta": 0x62, 0x65, 0x64, 0x61.

flWorkFWInfoDate

OID	1.3.6.1.4.1.4346.11.11.11.1.3
Syntax	Octet string (6)
Access	Read
Description	Contains the creation date of the firmware version as a string. Example for "21.05.2001": 0x32, 0x31, 0x30, 0x35, 0x30, 0x31.

flWorkFWInfoTime

OID	1.3.6.1.4.1.4346.11.11.11.1.4
Syntax	Octet string
Access	Read
Description	Contains the creation time of the firmware version as a string. Example for "14:10:20": 0x31, 0x34, 0x31, 0x30, 0x32, 0x30.

flWorkFWInfoCopyright

OID	1.3.6.1.4.1.4346.11.11.11.1.5
Syntax	Display string
Access	Read
Description	Contains the owner of the firmware copyright. Copyright by Phoenix Contact GmbH & Co., 2003.

flWorkFWInfoBootVersion

OID	1.3.6.1.4.1.4346.11.11.11.1.6
Syntax	Octet string
Access	Read
Description	Contains the version of the boot loader as a string. Example for Version "2.65": 0x32, 0x2e, 0x36, 0x35.

flWorkFWInfoBootState

OID	1.3.6.1.4.1.4346.11.11.11.1.7
Syntax	Octet string
Access	Read
Description	Contains the boot loader release as a string. Example for "beta": 0x62, 0x65, 0x64, 0x61.

flWorkFWInfoBootDate

OID	1.3.6.1.4.1.4346.11.11.11.1.8
Syntax	Octet string
Access	Read
Description	Contains the creation date of the boot loader version as a string. Example for "09.03.01": 0x30, 0x39, 0x30, 0x33, 0x30, 0x31.

flWorkFWInfoBootTime

OID	1.3.6.1.4.1.4346.11.11.11.1.9
Syntax	Octet string
Access	Read
Description	Contains the creation time of the boot loader version as a string. Example for "14:10:20": 0x31, 0x34, 0x31, 0x30, 0x32, 0x30.

flWorkFWCtrl

OID 1.3.6.1.4.1.4346.11.11.11.2

flWorkFWCtrlBasic

OID 1.3.6.1.4.1.4346.11.11.11.2.1

flWorkFWCtrlReset

OID	1.3.6.1.4.1.4346.11.11.11.2.1.1
Syntax	Integer
Access	Read/write
Description	With write access, a reset can be executed with "2". With read access, the value is always "1".

flWorkFWCtrlHttp

OID	1.3.6.1.4.1.4346.11.11.11.2.1.6
Syntax	Integer
Access	Read/write
Description	This object can be used to disable the web server for the switch. The change only takes effect after a restart: Web server enabled: 2 Web server disabled: 1

flWorkFWCtrlSNMP

OID	1.3.6.1.4.1.4346.11.11.11.2.1.9
Syntax	Integer
Access	Read/write
Description	Here you can activate or deactivate the SNMP agent. The changes take effect after a restart. SNMP agent deactivated 1 SNMP agent activated 2

flWorkFWCtrlTrapDest

1.3.6.1.4.1.4346.11.11.11.2.2

flWorkFWCtrlTrapDestTable

1.3.6.1.4.1.4346.11.11.11.2.2.1

flWorkFWCtrlTrapDestEntry	
OID	1.3.6.1.4.1.4346.11.11.11.2.2.1.1
Syntax	
Access	
Description	Generates a table with the IP addresses of the trap managers.
flWorkFWCtrlTrapDestIndex	
OID	1.3.6.1.4.1.4346.11.11.11.2.2.1.1.1
Syntax	Integer32 (1 ... 1024)
Access	Read
Description	Indicates the index of the target component, which should receive the traps.

flWorkFWCtrlTrapDestIPAddr	
OID	1.3.6.1.4.1.4346.11.11.11.2.2.1.1.2
Syntax	IP address
Access	Read/write
Description	Indicates the IP address of the target component, which should receive the traps.
flWorkFWCtrlTrapDestCapacityMax	
OID	1.3.6.1.4.1.4346.11.11.11.2.2.1.1.2.3
Syntax	Integer32 (1 ... 1024)
Access	Read
Description	Specifies the maximum permissible number of trap receivers.
flWorkFWCtrlTrapDestEnable	
OID	1.3.6.1.4.1.4346.11.11.11.2.2.1.1.2.3
Syntax	Integer
Access	Read/write
Description	Activates/deactivates the sending of traps: Sending of traps deactivated: 1 Sending of traps activated: 2

flWorkFWCtrlTrapDestCapacityMax

OID	1.3.6.1.4.1.4346.11.11.11.2.2.2
Syntax	Integer32
Access	Read
Description	Specifies the maximum permissible number of trap receivers.

flWorkFWCtrlTrapDestEnable

OID	1.3.6.1.4.1.4346.11.11.11.2.2.3
Syntax	Integer
Access	Read/write
Description	This object can be used to disable the "send SNMP traps" function: Sending permitted 2 Sending not permitted 1

flWorkFWCtrlPasswd

OID 1.3.6.1.4.1.4346.11.11.11.2.3

flWorkFWCtrlPasswdSet

OID	1.3.6.1.4.1.4346.11.11.11.2.3.1
Syntax	Octet string (2 ... 24)
Access	Read/write

For security reasons the response is always "*****" with read access.

Description	A new password, with a maximum of 12 characters, can be assigned here. Example: - Your new password is to be "*factory3*". - The password must be entered a second time for confirmation. - You enter "*factory3factory3*". - Your password for write access is now: "*factory3*".

flWorkFWCtrlPasswdSuccess

OID	1.3.6.1.4.1.4346.11.11.11.2.3.2
Syntax	Integer
Access	Read
Description	A message is displayed, which informs you whether the last change of password was successful: - Not changed 1 - Failed 2 - Successful 3

flWorkFWCtrlLoginExpire

OID	1.3.6.1.4.1.4346.11.11.11.2.3.3
Syntax	Integer32 (30 ... 3600)
Access	Read/write
Description	Here, the number of seconds between two password entries is specified. After the time has elapsed, the password must be re-entered, if required. Default 300 Range 30 - 3600

flWorkFWCtrlUpdate

OID 1.3.6.1.4.1.4346.11.11.11.2.4

flWorkFWCtrlTftpIpAddr

OID	1.3.6.1.4.1.4346.11.11.11.2.4.2
Syntax	IP address
Access	Read/write
Description	This object can be used to set the IP address of the TFTP server.

flWorkFWCtrlTftpFile

OID	1.3.6.1.4.1.4346.11.11.11.2.4.3
Syntax	Octet string (0 ... 64)
Access	Read/write
Description	This object can be used to set the name of the firmware file for TFTP download.

flWorkFWCtrlUpdateStatus

OID	1.3.6.1.4.1.4346.11.11.11.2.4.4
Syntax	Integer
Access	Read
Description	This object can be used to request the status of the firmware update:

Update successful	1
Update not successful	2
No update completed	3
Unknown	4

flWorkFWCtrlUpdateExecute

OID	1.3.6.1.4.1.4346.11.11.11.2.4.5
Syntax	Integer
Access	Read/write
Description	This object can be used to trigger the firmware update.

No firmware update	1
Execute firmware update	2

After a firmware update, a reset is required to activate the new firmware.

flWorkFWCtrlRunningUpdate

OID	1.3.6.1.4.1.4346.11.11.11.2.4.6
Syntax	Integer
Access	Read
Description	This object can be used to request the status of the firmware update:

Firmware update not started	1
Executing firmware update	2
Firmware update successful	3
Connection error	4
Incorrect path/file name	5
Error	6

flWorkFWCtrlAutoUpdate

OID	1.3.6.1.4.1.4346.11.11.11.2.4.7
Syntax	Integer
Access	Read/write
Description	This object can be used to trigger the firmware update with subsequent restart:

No firmware update	1
Execute firmware update	2

flWorkFWCtrlConf

OID 1.3.6.1.4.1.4346.11.11.11.2.5

flWorkFWCtrlConfStatus

OID	1.3.6.1.4.1.4346.11.11.11.2.5.1
Syntax	Integer
Access	Read
Description	This object can be used to request the status of the active device configuration:

Configuration OK	1
Configuration faulty	2
Configuration saved	3
Saving configuration	4

flWorkFWCtrlConfSave

OID	1.3.6.1.4.1.4346.11.11.11.2.5.2
Syntax	Integer
Access	Read/write
Description	This object can be used to save the device configuration:

Do not save configuration	1
Save configuration	2

flWorkFWCtrlDefaultUponDelivery

OID	1.3.6.1.4.1.4346.11.11.11.2.5.3
Syntax	Integer
Access	Read/write
Description	This object can be used to set the device to the default settings (basic settings - see 2.1.1 on page 2-1). It also triggers a restart:

Do not reset to default settings	1
Reset to default settings	2

flWorkFWCtrlSerial

OID 1.3.6.1.4.1.4346.11.11.11.2.6

flWorkFWCtrlSerialBaud

OID	1.3.6.1.4.1.4346.11.11.11.2.6.1
Syntax	Integer
Access	Read
Description	This object can be used to request the set data transmission speed of the serial interface: 2400 baud 1 9600 baud 2 19200 baud 3 38400 baud 4 57600 baud 5 115200 baud 6

flWorkFWCtrlSerialDataBits

OID	1.3.6.1.4.1.4346.11.11.11.2.6.2
Syntax	Integer
Access	Read
Description	Indicates the number of data bits in the serial interface: 8 bits 1

flWorkFWCtrlSerialStopBits

OID	1.3.6.1.4.1.4346.11.11.11.2.6.3
Syntax	Integer
Access	Read
Description	Indicates the number of stop bits in the serial interface: 1 bit 1 2 bits 2

flWorkFWCtrlSerialParity

OID	1.3.6.1.4.1.4346.11.11.11.2.6.4
Syntax	Integer
Access	Read
Description	Indicates the parity mode for the serial interface: None 1 Odd 2 Even 3

flWorkFWCtrlSerialFlowControl

OID	1.3.6.1.4.1.4346.11.11.11.2.6.5
Syntax	Integer
Access	Read
Description	Indicates the selected flow control for the serial interface: None 1 Hardware 2

flSwitch

OID 1.3.6.1.4.1.4346.15.11.11

flSwitchCtrl

OID 1.3.6.1.4.1.4346.15.11.11.1

flSwitchCtrlSpanTree

OID	1.3.6.1.4.1.4346.15.11.11.1.1
Syntax	Integer
Access	Read/write
Description	Activates/deactivates STP for the switch. RSTP deactivated 1 RSTP activated 2

To enable RSTP activation, the "flSwitchCtrlRedundancy" object must be set to RSTP.

flSwitchCtrlRedundancy

OID	1.3.6.1.4.1.4346.15.11.11.1.2
Syntax	Integer
Access	Read/write
Description	Indicates the selected redundancy mechanism for the switch. If "No redundancy" is selected, all redundancy mechanisms and the corresponding web pages are disabled. No redundancy 1 RSTP activated 2

flSwitchCtrlMacTableErase

OID	1.3.6.1.4.1.4346.15.11.11.1.11
Syntax	Integer
Access	Read/write
Description	This object controls the deletion of the unicast table. If this object is set to "2", the switch immediately deletes its unicast table. The switch then relearns and creates a new table. The object is always set to "1". Default 1 Delete unicast table 2

flSwitchCtrlLinkStatusMirroring

OID	1.3.6.1.4.1.4346.15.11.11.1.12
Syntax	Integer
Access	Read/write
Description	The "Port Link Status Mirroring" function can be used to mirror the link status of a port to one or more other ports. The function can then be activated and configured via SNMP, as the function is deactivated by default upon delivery. If the function is enabled when the switch is started, it is only activated once the switch has been fully booted. Deactivated (default) 1 Activated 2 The "flSwitchControlLinkStatusMirroring" object enables/disables the "Port Link Status Mirroring" function. The "flWorkNetPortLinkStatusMirrorMap" object writes the bit mask of the mirrored ports, where bit 0 stands for port 1, bit 1 for port 2, etc. If the bit equals 1, this port mirrors the master port. The object is assigned 0 by default.

flWorkNetPortLinkStatusMirrorMap

OID	1.3.6.1.4.1.4346.11.11.4.2.2.1.19.X*
Syntax	Integer32 (0 - 255)
Access	Read/write
Description	X* = The port number of the master port to be mirrored Example 1: The status of port 6 should be mirrored to port 1. Set the "flWorkNetPortLinkStatusMirrorMap" object for port 6 to 1. (OID 1.3.6.1.4.1.4346.11.11.4.2.2.1.19.6 = 1) Then enable the function with the "flSwitchCtrlLinkStatusMirroring" object. 2 (OID 1.3.6.1.4.1.4346.11.11.15.1.12.0 = 2) Example 2: The status of port 5 should be mirrored to port 1, 3, and 4. Port status mapping must be calculated for port 1, 3, and 4: Mapping = (binary) 00001101 = 13 Set the "flWorkNetPortLinkStatusMirrorMap" object for port 5 to 13. (OID 1.3.6.1.4.1.4346.11.11.4.2.2.1.19.5 = 13) Then enable the function with the "flSwitchCtrlLinkStatusMirroring" object. (OID 1.3.6.1.4.1.4346.11.11.15.1.12.0 = 2)

flSwitchIgmpTableErase

OID	1.3.6.1.4.1.4346.15.11.11.3.3
Syntax	Integer
Access	Read/write
Description	This object controls the deletion of the multicast table. If this object is set to "2", the switch immediately deletes its multicast table. The switch then relearns and creates a new table. The object is always set to "1". Default 1 Delete multicast table 2

3.4 Management via local RS-232 communication interface

3.4.1 General function

A local communication connection can be established to an external management station via the RS-232 interface in Mini-DIN format. Use the "PRG CAB MINI DIN" programming cable (Order No. 2730611). The communication connection is established using a corresponding emulation between the switch and a PC (e.g., HyperTerminal under Windows) and enables access to the user interface.

The reference potentials of the RS-232 interface and the supply voltage are not electrically isolated.

3.4.1.1 Interface configuration

Make the following settings on your Windows PC.

Figure 3-32 HyperTerminal configuration

3.4.1.2 Calling the user interface

Connect the PC and the switch using a suitable RS-232 cable (PRG CAB MINI DIN, Order No. 2730611). After establishing the connection, press the keyboard shortcut Ctrl + L on the PC. The switch then requests the screen contents.

3.4.2 User interface functions

3.4.2.1 Functions during the boot process after a restart

If you open the user interface in the first five seconds directly after an LMS restart, you have the option of triggering a firmware update. Since the actual switch firmware is not yet started at this stage, even in the event of an error, e.g., if the firmware on the device is faulty, this firmware can still be updated (see Section "Starting with faulty software" on page 3-56).

3.4.2.2 Functions during operation

The following functions are available in the user interface:

– Setting IP parameters
– Selecting the addressing mechanism
– Resetting to the default settings
– Activating/deactivating the web server, Rapid Spanning Tree, and the SNMP interface.

The activation/deactivation of the web server only takes effect after a "SAVE" and subsequent restart.

All settings are applied using "APPLY", but are **not** saved permanently. Use the "SAVE" function to save the active configuration settings permanently.

3.4.2.3 Structure of the user interface screens

Login screen

```
Login Screen



            - - - > Phoenix Contact Lean Managed Switch  < - - -
                        Phoenix Contact GmbH & Co. KG
                           www.phoenixcontact.com


               Running switch application version:   x.xx

               Password:    [                  ]
```

Figure 3-33 User interface login screen

The login screen indicates the version of the firmware used. A password must be entered to make other settings. By default upon delivery, the password is "private". It is case-sensitive. We strongly recommend that you change the password (via SNMP or WBM).

Basic switch configuration

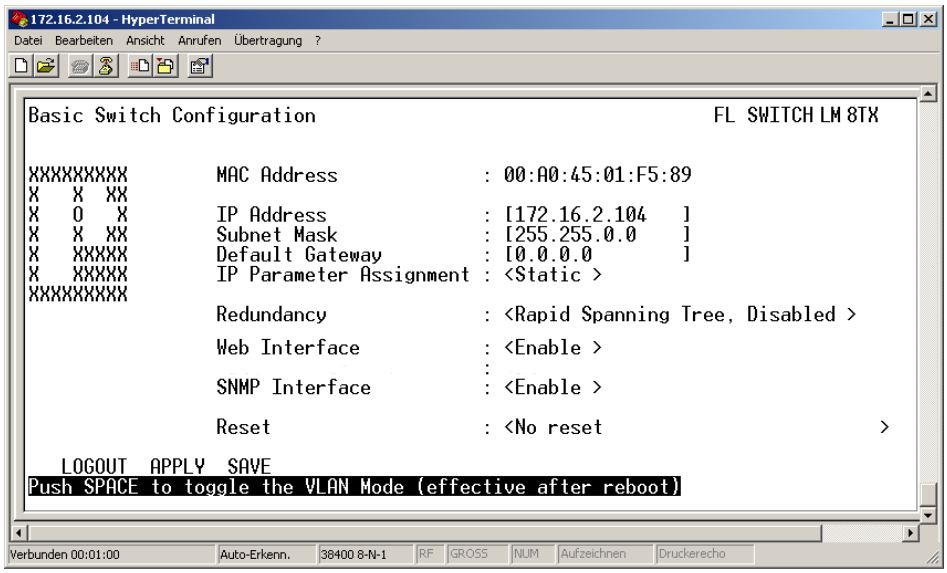

Figure 3-34 IP configuration in the user interface

As well as displaying the set MAC address, this screen can be used to view or modify the IP parameters.

In order to set the IP parameters, the "Static" option must be selected for "IP Parameter Assignment".

This user interface screen can be used to determine the addressing mechanism or to trigger a device restart.

All settings are applied using "APPLY", but are **not** saved permanently. Use the "SAVE" function to save the active configuration settings permanently.

Resetting to the default settings

```
Reset Switch Warning

       Warning:
         Resetting the switch will cause all connectivity to the switch to
         be lost until the switch has rebooted.

         If you select reset to "factory default", all configuration
         information will be reset to its factory default settings.


       Confirm Reset:  <No     >



   PREV MENU APPLY
Push Space Bar to select `yes` and reset the switch
```

Figure 3-35 Resetting to the default settings

This screen can be used to reset the switch to the settings default upon delivery or to restart it. This screen can be opened by first setting the "Reset Switch" option or the "Reset Switch to factory defaults" option in the "Basic Switch Configuration" screen, and then selecting "Apply" or "Save". This undoes any changes to the configuration and resets all IP parameters to the settings default upon delivery (see Section 2.1.1 on page 2-1).

Resetting to the default settings also resets the password to "private". For security reasons, we recommend you enter a new, unique password.

3.4.3 Starting with faulty software

If the software installed on the LMS (firmware) is faulty, you can restore or update the firmware by means of an update.

Procedure:

– Connect the switch to your PC via the serial RS-232 interface. Make sure that your HyperTerminal is configured correctly (see configuration on page 3-52).

```
- - - > Phoenix Contact Lean Managed Switch < - - -

Phoenix Contact GmbH & Co. KG
www.phoenixcontact.com
BIOS version: X.XX


Press any key to stop booting ...
1

ENTER ´a´  TO DOWNLOAD SWITCH SOFTWARE USING XMODEM PROTOCOL
ENTER ´c´  TO CONTINUE BOOTING

PxC LMS systemprompt
```

Figure 3-36 Screen displayed on HyperTerminal when booting

If the device firmware is faulty, the following message appears:

```
         - - - > Phoenix Contact Lean Managed Switch < - - -
                    Phoenix Contact GmbH & Co. KG
                        www.phoenixcontact.com


Press any key to stop booting ...
 0
booting continues ...

SOFTWARE IMAGE CORRUPTED

YOU HAVE TO UPDATE THE SOFTWARE USING XMODEM PROTOCOL:

ENTER ´a´ TO DOWNLOAD SWITCH SOFTWARE USING XMODEM PROTOCOL
ENTER ´c´ TO CONTINUE BOOTING

PxC LMS systemprompt>
```

Figure 3-37 Selection menu for faulty firmware

Press "a" to download the new software. The following message then appears:

```
        - - - > Phoenix Contact Lean Managed Switch < - - -
                    Phoenix Contact GmbH & Co. KG
                       www.phoenixcontact.com



ENTER ´a´ TO DOWNLOAD SWITCH SOFTWARE USING XMODEM PROTOCOL
ENTER ´c´ TO CONTINUE BOOTING

PxC LMS systemprompt> a

Downloading firmware image with XMODEM over serial port ...

XMODEM Receive: Waiting for Sender ...

-_
```

Figure 3-38 XMODEM ready

The switch is now ready for the new firmware. In HyperTerminal, select "Send File" from the "Transmission" menu.

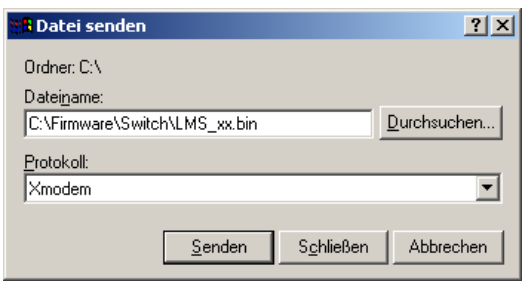

Figure 3-39 Xmodem - Send File option

Make sure that the protocol is set to "Xmodem", otherwise the transmission will fail.

Clicking "Send" starts the file transfer. The following screen shows the progress of the file transfer.

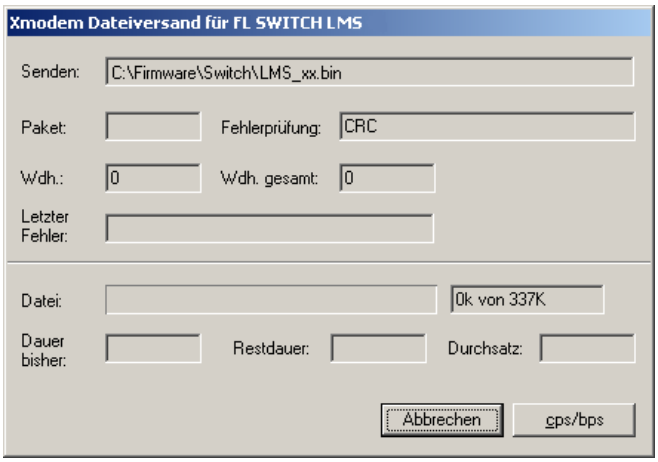

Figure 3-40 File transfer with Xmodem

File transfer may take a few minutes. Do not perform any other actions while the box is open.

Once the box has closed, a message appears in HyperTerminal. Enter "c" to continue with the boot process or trigger a reset using the reset button.

4 Rapid Spanning Tree

4.1 General function

4.1.1 General function

Loops

The Rapid/Spanning Tree Protocol (RSTP) is a standardized method (IEEE 802.1w/IEEE 802.1d) that enables the use of Ethernet networks with redundant data paths. Ethernet networks with redundant data paths form a meshed topology with initially impermissible loops. Due to these loops, data packets can circulate endlessly within the network and can also be duplicated. As a consequence, the network is usually overloaded due to circulating data packets and thus communication is interrupted. The meshed structure is therefore replaced by a logical, deterministic path with a tree structure without loops using the Rapid Spanning Tree algorithm. In the event of data path failure, some of the previously disconnected connections are reconnected to ensure uninterrupted network operation.

IEEE 802.1w

The Rapid Reconfiguration Spanning Tree Protocol (RSTP) is a standardized method (IEEE 802.1w) that enables the use of Ethernet networks with redundant data paths and prevents the long timer-controlled switch-over times of STP. Usually, the formal term "Rapid Reconfiguration Spanning Tree" is not used, rather just "Rapid Spanning Tree Protocol (RSTP)".

Example:

In the following network topology (six) redundant paths have been created to ensure access to all network devices in the event of a data path failure. These redundant paths are impermissible loops. The RSTP protocol automatically converts this topology into a tree by disabling selected ports. In this context, one of the switches is assigned the role of the root of the tree. From this root, all other switches can be accessed via a single data path.

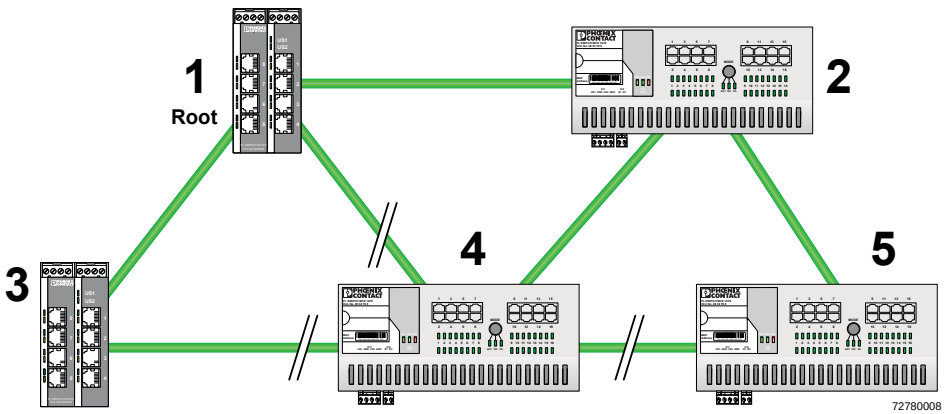

Figure 4-1 Possible tree structure with Rapid Spanning Tree

4.2 RSTP startup

Startup consists of two parts that must be executed in the specified order:

1 Enable RSTP on all switches that are to be operated as active RSTP components in the network.

2 Connect the switches to form a meshed topology.

NOTE: Only create the meshed topology after activating RSTP.

4.2.1 Enabling RSTP on all switches involved

RSTP can be activated via web-based management, via the SNMP interface or via the serial interface.

NOTE: While learning the network topology, the switch temporarily does not participate in network communication.

4.2.1.1 Enabling using web-based management

Start web-based management for the switches, e.g., using Factory Manager, switch to the "General Configuration" menu, then the "User Interfaces" page. Activate the "Rapid Spanning Tree" function under "Redundancy" and confirm by entering your password.

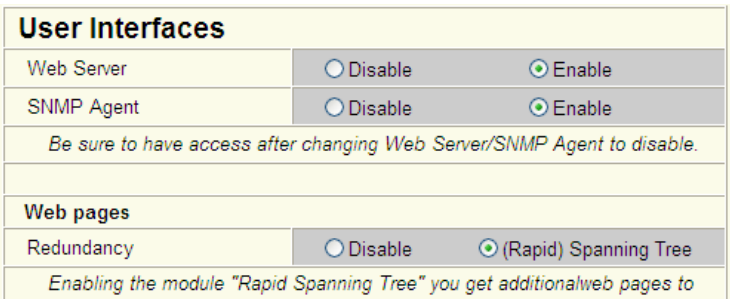

Figure 4-2 "User Interfaces" menu

The previously created configuration is lost if "No redundancy" is selected in the WBM menu following RSTP configuration.

Now switch to the "RSTP General" menu. Here, you will find various information about the Rapid Spanning Tree configuration.

RSTP General	
(Rapid) Spanning Tree Status	This bridge is the **root** bridge!
System Up Time	1 days 18 hours 36 minutes 9 seconds
Last Topology Change	1 days 18 hours 36 minutes 3 seconds ago
Topology Changes	1
Designated Root	8000 00:A0:45:00:9A:1F
Root Port	0
Root Cost	0
Maximum Age of STP Information	20s
Hello Time	2s
Forward Delay	15s
Note: This web page will be refreshed in 1 sec automatically (change the interval at the web page 'Services')!	

Figure 4-3 "RSTP General" web page

The web page displays the parameters with which the switch is currently operating.

Port roles

The **root port** of a switch connects this switch to the root switch - either directly or via another switch (designated switch).

The **designated port** is the port at a designated switch that is connected to the root port of the next switch.

No additional switches/bridges are connected to **edge ports**. Termination devices are connected to edge ports.

An **alternate port** is a path to the root, which, however, did not become a root port. I.e., this port is not part of the active topology.

RSTP Configuration

It is sufficient to set the Rapid Spanning Tree status to "Enable" in order to start RSTP using default settings. Priority values can be specified for the switch. The root and alternate ports can be specified via these priority values.

Only multiples of 4096 are permitted. The desired value can simply be entered in the "Priority" field. The value will be rounded automatically to the next multiple of 4096. Once you have confirmed the modification by entering your password, the initialization mechanism is started.

Redundant connections can now be created.

The "Maximum Age of STP Information", "Hello Time", and "Forward Delay" fields have the same meaning as for STP. These values are used when this switch becomes a root. The values currently used can be found under RSTP General.

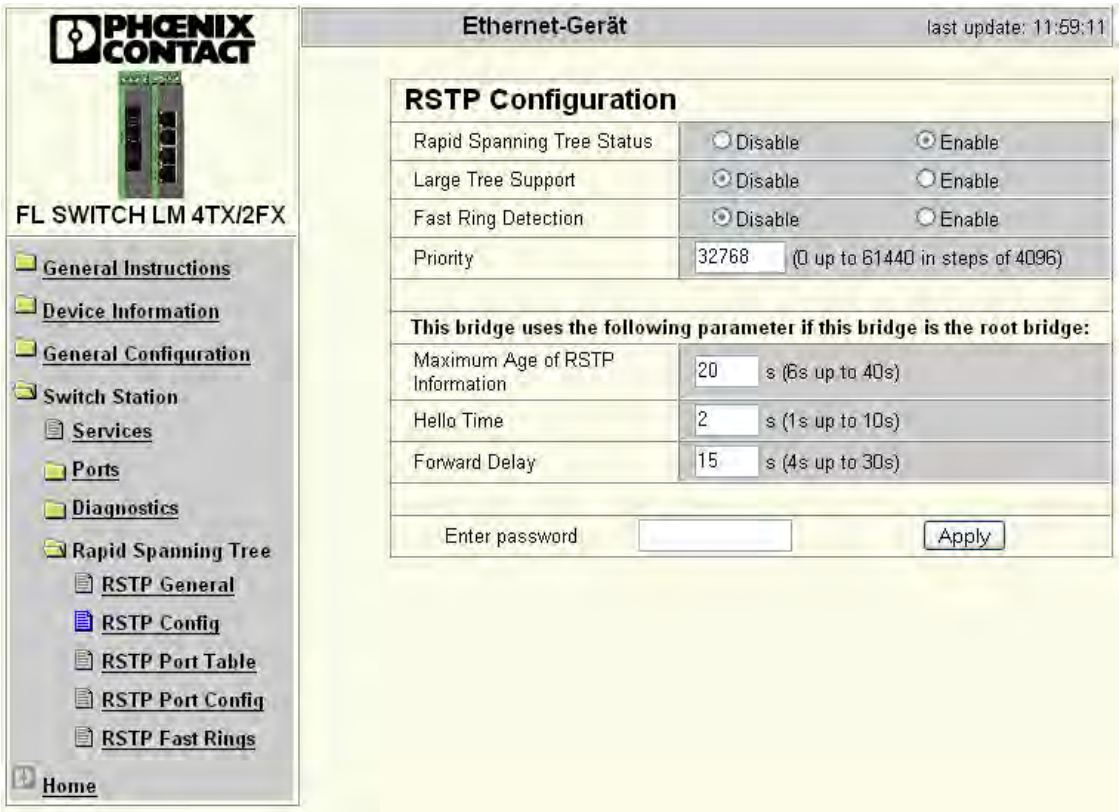

Figure 4-4 "RSTP Configuration" web page

Maximum Age of RSTP Information
RSTP information (BPDU) is sent by the root switch at an age of "0" and at hello time intervals. If a BPDU was received, all other switches send their own configuration message via the ports for which the switch itself is the designated switch. The age of the information (BPDU) is increased by one second every time the information passes a switch.

Hello Time
Specifies the time interval within which the root bridge regularly reports to the other bridges via BPDU.

Forward Delay
The forward delay value indicates how long the switch is to wait in order for the port state in STP mode to change from "Discarding" to "Listening" and from "Listening" to "Learning" (2 x Forward Delay).

RSTP Port Table

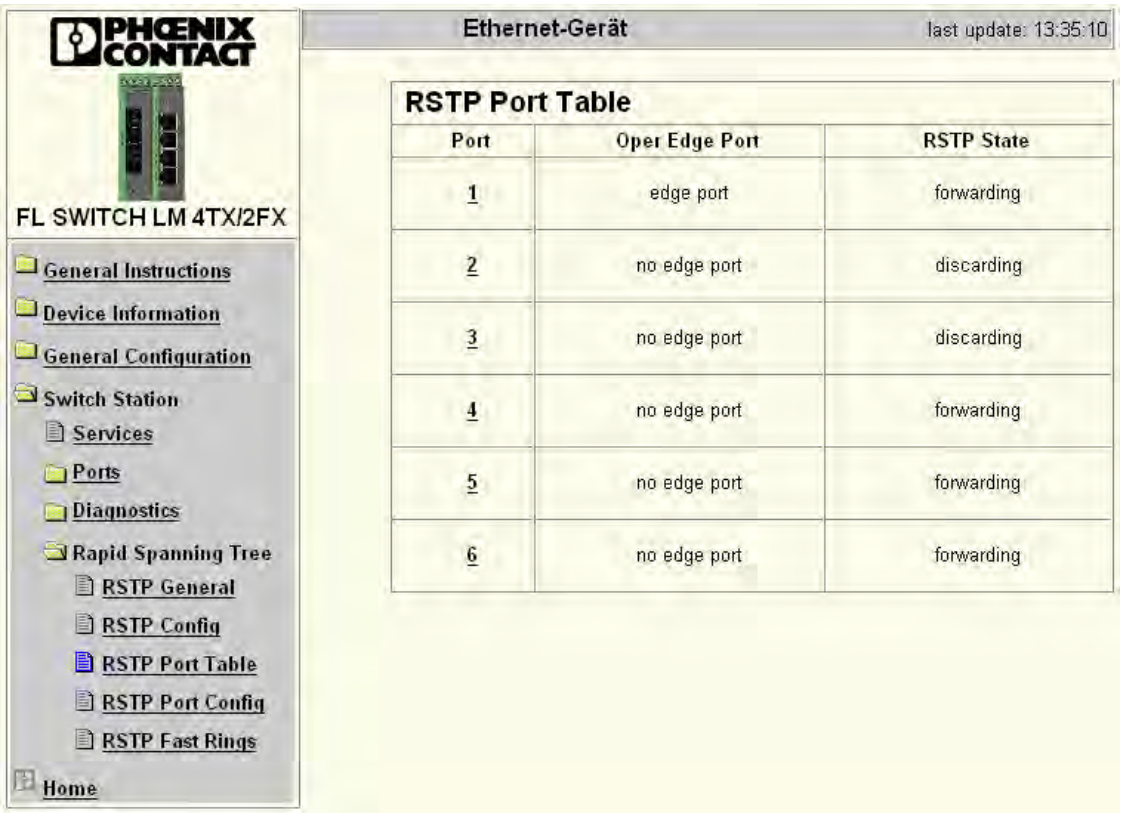

Port	Oper Edge Port	RSTP State
1	edge port	forwarding
2	no edge port	discarding
3	no edge port	discarding
4	no edge port	forwarding
5	no edge port	forwarding
6	no edge port	forwarding

Figure 4-5 "RSTP Port Table" web page

Oper Edge Port
All ports that do not receive any RSTP BPDUs become edge ports, i.e., ports that switch to the "Forwarding" state immediately after restart.

RSTP State
Indicates the current RSTP state of the relevant port.

Possible states:

– "Forwarding"
  The port is integrated in the active topology and forwards data.
– "Discarding"
  The port does not take part in data transmission.
– "Learning"
  The port does not take part in data transmission of the active topology, however, MAC addresses are learned.

4.2.1.2 RSTP Port Configuration

Modifications of properties can result in complete reconfiguration of Rapid Spanning Tree.

This page displays the valid RSTP configuration settings for the selected port.

If termination devices or subnetworks are connected without RSTP or STP via a port, it is recommended that the "Admin Edge Port" be set to "Edge Port". A link modification at this port will therefore not result in a topology modification.

4.2.1.3 Switch/port ID

The validity of switches and ports is determined according to priority vectors.

Bridge identifier

A switch ID consists of eight bytes as an unsigned integer value. When comparing two switch IDs, the one with the lowest numeric value is of higher, i.e., "better", priority.

The first two bytes contain the priority.
The last six bytes contain the MAC address and thus ensure the uniqueness of the switch ID in the event of identical priority values.

The switch with the lowest numerical switch ID becomes the root. It is recommended that the root port and alternate port are specified using the priority.

Port identifier

The port ID consists of four bits for the port priority and twelve bits for the port number. The port ID is interpreted as an unsigned integer value. When comparing two port IDs, the one with the lowest numeric value is of higher, i.e., "better", priority.

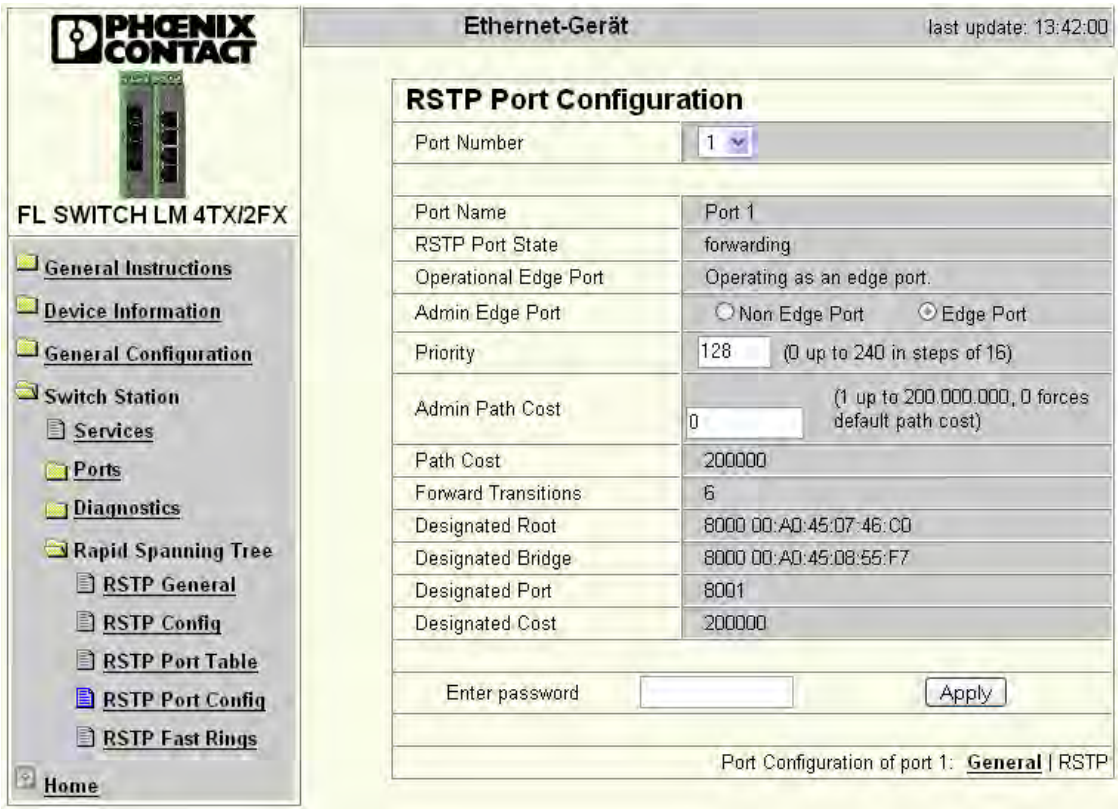

Figure 4-6 "RSTP Port Configuration" web page

Port Number
Indicates the number of the port currently selected.

Port Name
Indicates the name of the port.

RSTP Port State
Indicates the status in which this port takes part in STP.

Operational Edge Port
Indicates whether this port is operated as an edge port.

Admin Edge Port
Here you can specify whether this port is to be operated as an edge port (default setting), if possible.

Priority
Indicates the priority set for this port. Due to backwards compatibility with STP, priority values can be set that are not configurable in RSTP.

Admin Path Cost
Indicates the path cost set for this port. A path cost equal to "0" activates the cost calculation according to the transmission speed (10 Mbps = 100; 100 Mbps = 19).

Path Cost
Indicates the path cost used for this port.

Forward Transitions
Indicates how often the port switches from the "Discarding" state to the "Forwarding" state.

Additional parameters provide information about the network paths in a stable topology that are used by the BPDU telegrams.

Designated Root
Root bridge for this Rapid Spanning Tree.

Designated Bridge
The switch from which the port receives the best BPDUs. The value is based on the priority value in hex and the MAC address.

Designated Port
Port via which the BPDUs are sent from the designated bridge. The value is based on the port priority (2 digits) and the port number.

Designated Cost
Indicates the path cost of this segment to the root switch.

Common features/differences with regard to STP

As with STP, a device is also selected as the root for RSTP and every port is assigned a role according to its participation within the topology.

Port states

The number of port states is also reduced in RSTP. Only the "Forwarding", "Discarding", and "Learning" states are still available if the network is operated in mixed operation of STP and RSTP.

Frame duplication

Due to the fast switch-over times of RSTP, frames may be duplicated and the order of frames may be changed.

4.2.1.4 Enabling via serial interface

Establish a connection to the switch as described in Section "Management via local RS-232 communication interface" on page 3-52. Set "Rapid Spanning Tree, Enabled" on the following page in the "Redundancy" field and select "Save".

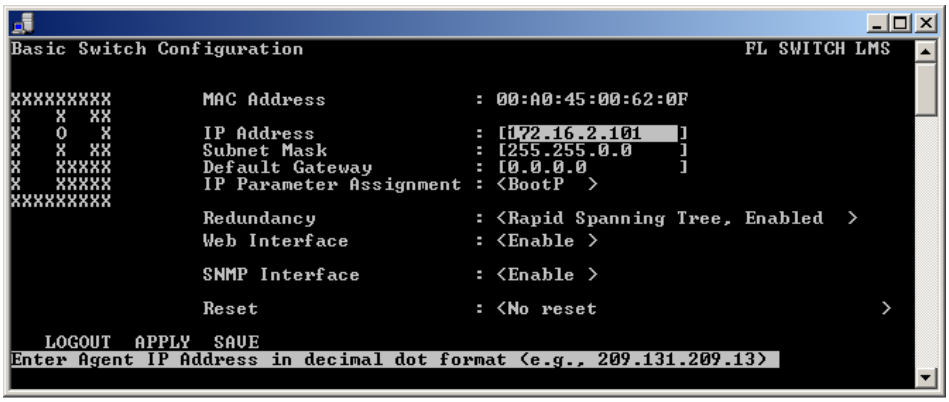

Figure 4-7 Activating Rapid Spanning Tree

4.2.1.5 Connecting the switches to form a meshed topology

Having activated Rapid Spanning Tree for all switches, you can create a meshed topology with redundant data paths. Any data connections can now be created without taking loops into consideration. Loops can even be added on purpose in order to create redundant links.

A data path between Rapid Spanning Tree switches can be:

– A direct connection.
– A connection via one or more additional switches that do not support Spanning Tree.

> If Spanning Tree is not supported by all of the switches used, the reconfiguration time for Spanning Tree is extended by the aging time of the switches without Spanning Tree support.

– A connection via one or more additional hubs that do not support Spanning Tree.

Furthermore, a data path can also consist of a connection of a Spanning Tree switch to:

– A termination device.
– A network segment in which **no** loops may occur, which consists of several infrastructure components (hubs or switches) without Spanning Tree support.

For the first three cases, the following rules must be observed:

– **Rule 1: Spanning Tree transparency for all infrastructure components**
All infrastructure components used in your network that do not actively support Spanning Tree must be transparent for Spanning Tree messages (BPDUs) and must forward all BPDUs to all ports without modifying them. When Spanning Tree is disabled, the switch is transparent for BPDUs.

– **Rule 2: At least one active Spanning Tree component per loop**
An active Spanning Tree component supports the Spanning Tree Protocol, sends/receives and evaluates BPDUs, and sets its ports to the relevant STP states. Each loop in a network must have at least one active Spanning Tree component to disintegrate the loop.

Example:

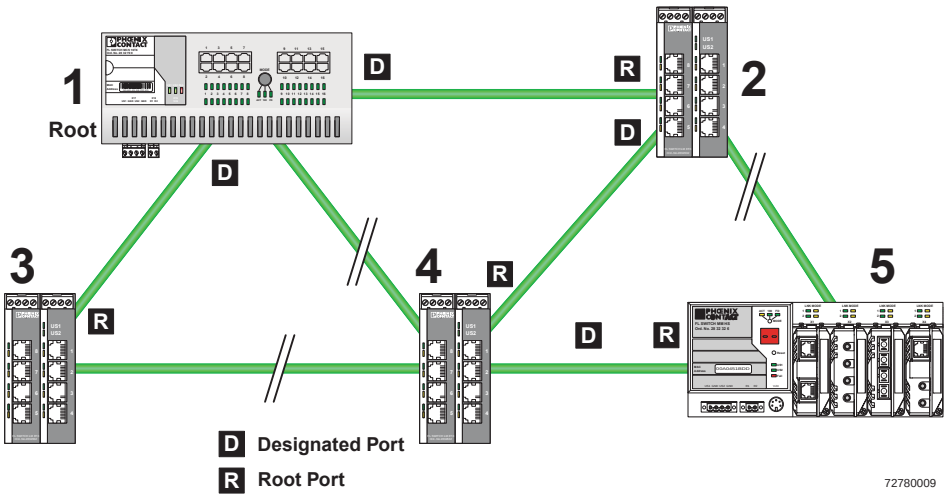

Figure 4-8 Example topology

There are six loops in the example topology shown above. Each of these loops contains active STP components, e.g. device 4 and device 2. In this way, all loops are broken by STP.

– **Rule 3: No more than ten active Spanning Tree components in the topology when using Spanning Tree default settings**
The ability to disintegrate any topology to form a tree without loops requires a complex protocol that works with several variable timers. These variable timers are dimensioned using the default values recommended by the IEEE standard so that a topology with a maximum of ten active Spanning Tree components always results in a stable network.

4.2.2 RSTP fast ring detection

The "RSTP Fast Ring Detection" function can be activated on the "RSTP Configuration" web page.

This function speeds up the switch-over to a redundant path in the event of an error and provides easy diagnostics. RSTP fast ring detection provides each ring with an ID, this ID is made known to each switch in the relevant ring. A switch can belong to several different rings at the same time.

Structure of the ring ID

The ring ID consists of the port number of the blocking port and the MAC address of the corresponding switch. Advantages of the ring ID:

– Easier to identify redundant paths and locate blocking ports.

– Possible to check whether the desired topology corresponds to the actual topology.

RSTP Fast Ring Table

No.	Local ring ports		Blocking port of ring		Status
	A	B	Port	on Switch	

Ring ID

Figure 4-9 RSTP ring table

Information in WBM

The following information is displayed on the web page (and via SNMP):

Local ring ports
These two ports of this switch belong to the ring that is listed (ring ID).

Blocking port
This port deliberately breaks the loop.

Ring detection states

The following states can occur for ring detection:

– **Not Ready** - Ring detection has not yet been completed.
– **OK** - Ring detection has been completed and quick switch-over is possible in the event of an error.
– **Broken** - The ring is broken on this branch in the direction of the root switch.
– Failed on Port A - The ring was broken on this switch at port A.

In the event of a link failure in the ring, the "trapRstpRingFailure" trap is sent.

If "Broken" or "Failed" status lasts for longer than 60 seconds, it is no longer displayed after the next topology modification, since these rings no longer exist.

When using RSTP fast ring detection, please note the following:

– For RSTP fast ring detection, do **not** use devices that do **not** support this function.
– Enable RSTP fast ring detection on **all** devices.
– All data paths must be in full duplex mode.

4.2.2.1 Fast ring detection switch-over times

With the maximum permissible number of 57 switches in a ring, typical switch-over times range from 100 to 500 ms with fast ring detection.

4.2.3 Connection failure - Example

The following diagram illustrates an RSTP ring with six switches, where switch 1 is the root. The ring extends over port 1 and port 2 for each switch. On switch 4, the loop is broken by a blocking port.

If a cable interrupt occurs at the point indicated by the star, this produces the following entries on the "RSTP Fast Ring Detection" web page:

Switch 3 - Failed on Port A

Switch 4 - Broken

In addition, switch 3 would also generate the "flWorkLinkFailure" trap, as long as the sending of traps is not disabled.

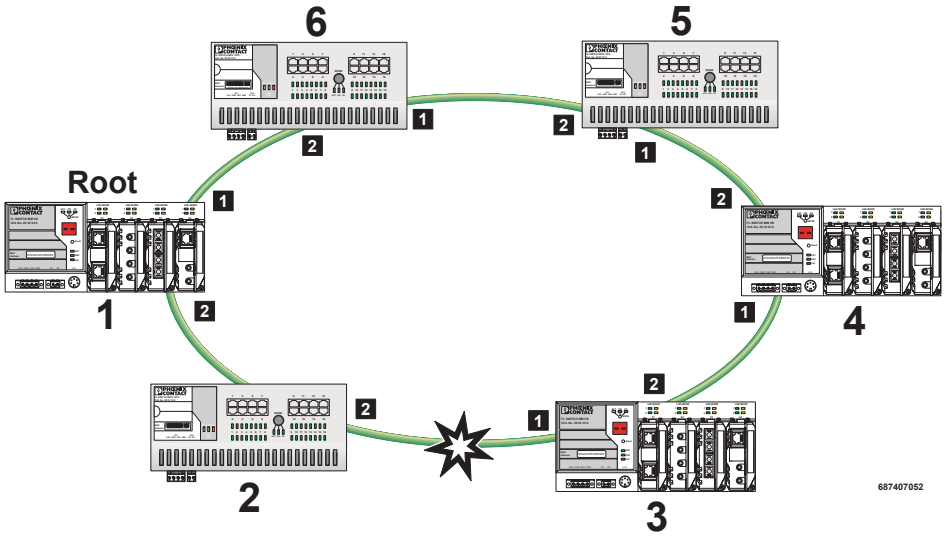

Figure 4-10 Connection failure with RSTP ring detection

4.2.4 Example topologies

4.2.4.1 Redundant coupling of network segments

In this example, two network segments are connected via redundant data paths. Two STP components have ports in the "Blocking" state (highlighted in gray). This is sufficient to operate the network.

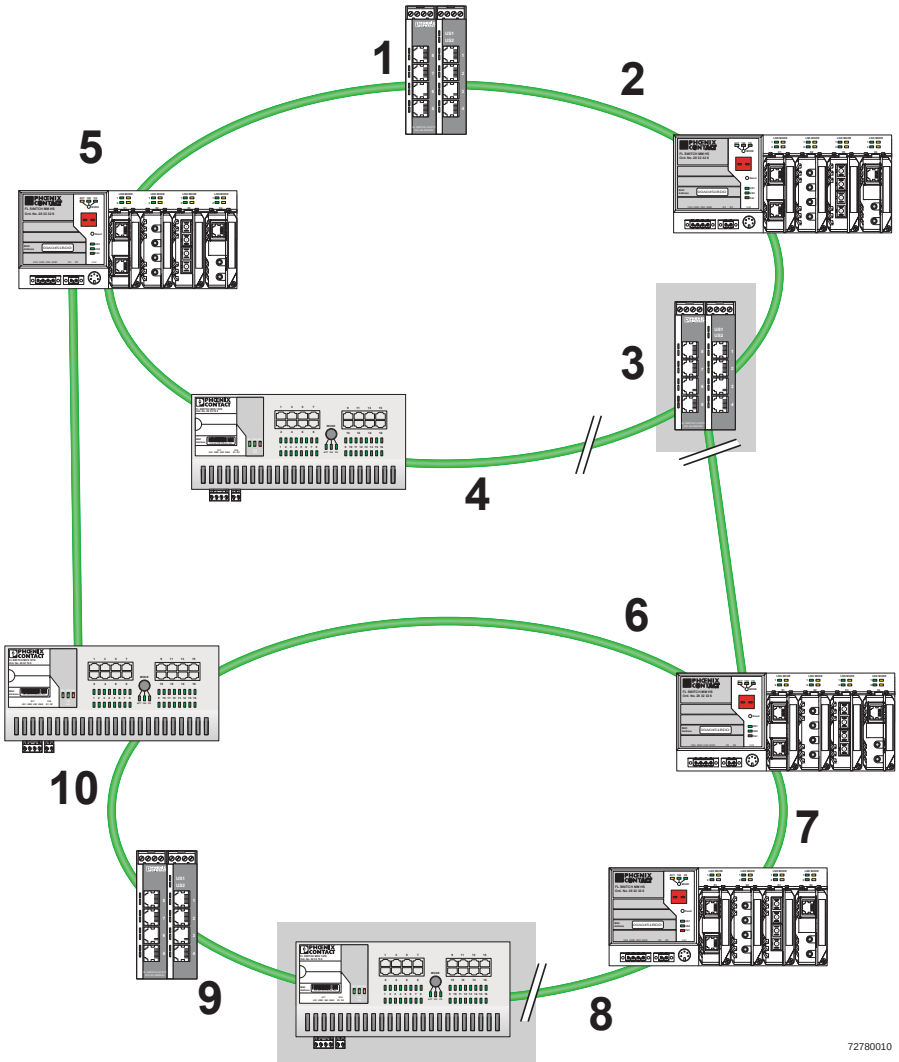

Figure 4-11 Redundant coupling of network segments

4.2.4.2 Flowchart for specifying the root path

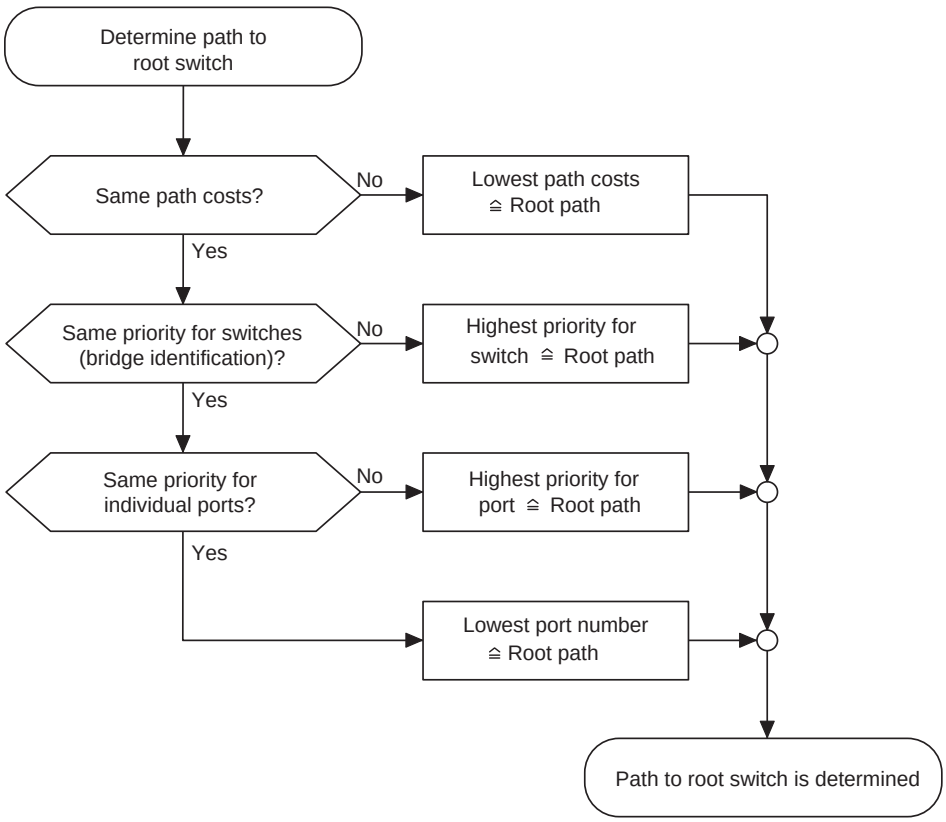

Figure 4-12 Flowchart for specifying the root path

4.2.4.3 Extended configuration

It may be useful to actively specify the topology that is formed due to the Rapid Spanning Tree Protocol and to not leave it to the random MAC addresses of the switches involved. Non-blocking/blocking data paths can thus be influenced and a load distribution specified. It may also be useful to explicitly disable the Rapid Spanning Tree Protocol at ports that do not participate in Rapid Spanning Tree so as to benefit from the fast forwarding function. The Rapid Spanning Tree Protocol must also be disabled at individual ports if two different network segments - both using Rapid Spanning Tree - are to be coupled via these ports without the two tree structures merging into a large Spanning Tree.

Specifying the root switch

The root switch is assigned via the assignment of an appropriate priority for the Rapid Spanning Tree segment. Set the highest priority (lowest value) in the "Priority" field on the "STP Bridge Configuration" page in WBM for the switch selected as the root switch. Make sure that all the other network switches have a lower priority (higher value). Here, the set path costs are not evaluated.

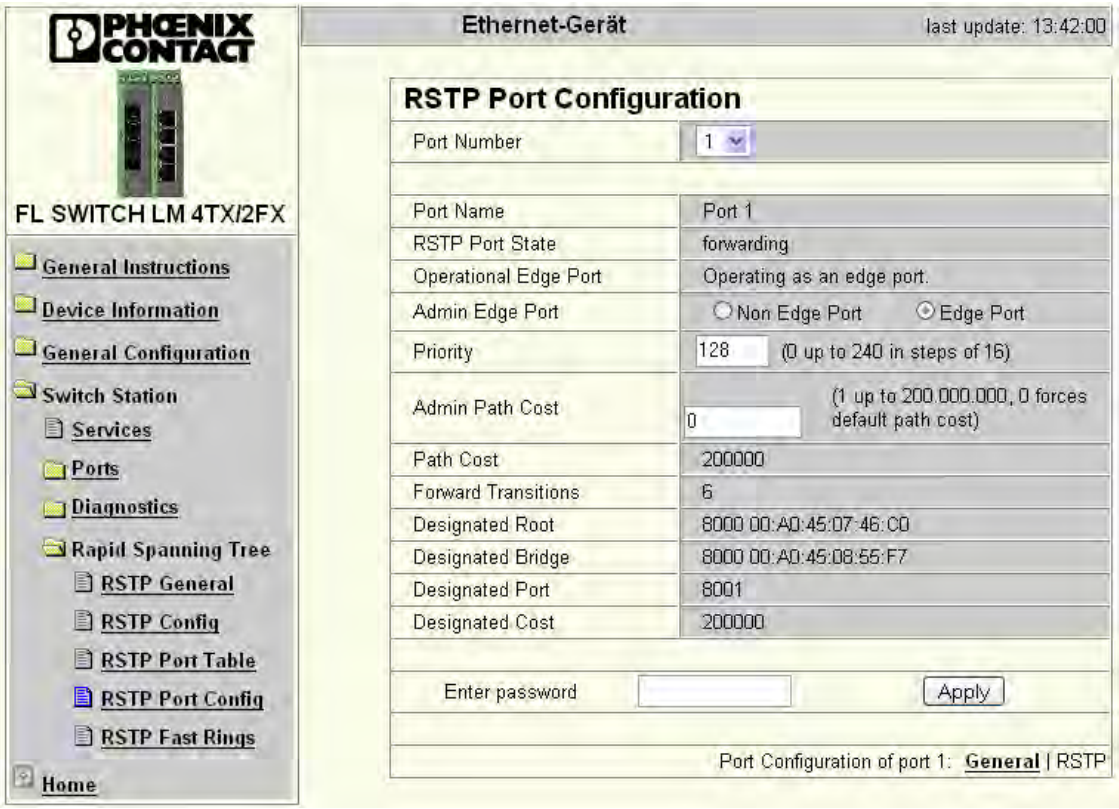

Figure 4-13 Specifying the root switch priority

Specifying the root port and designated port

The root port and designated port are always the ports with the lowest path costs. If the costs are the same, the priority is the decisive criterion. If the priorities are also the same, the port number is the decisive criterion. Specify an appropriate combination of costs and priority on the "RSTP Port Configuration" page in WBM for the port specified as the root port or designated port. Make sure that all the other network switches either have higher costs or a lower priority (higher value).

4.2.4.4 Disabling the Rapid Spanning Tree Protocol/using the fast forwarding function

NOTE: One of the following requirements must be met so that the Rapid Spanning Tree Protocol can be disabled for a port:

– A termination device is connected to the port.
– Additional infrastructure components are connected to the port. The corresponding network segment does not contain any loops.

Additional infrastructure components are connected to the port, forming a Rapid Spanning Tree of their own. No additional redundant connections to this network segment are permitted.

4.2.4.5 Modifying the protocol timers

NOTE: Modifying the protocol timers may result in unstable networks.

It may be necessary to modify the protocol timers if, e.g., there are more than ten active Rapid Spanning Tree components in a single network. You can also try to reduce the reconfiguration times by modifying the timers. However, care should be taken in order to prevent unstable networks.
Please note that the protocol times are specified by the root switch and that they are distributed to all devices via BPDU. It is therefore only necessary to modify the values in the root switch. If the root switch fails, the timer values of another active RSTP switch (i.e., the new root switch) will be valid for the entire network segment. Please remember this during component configuration.

Specifying the timer values

– Maximum number of active Rapid Spanning Tree components along the path beginning at the root switch (please refer to the following two example illustrations): = (MaxAge/2) - Hello Time + +1
– 2 x Forward Delay - 1 s ≥ MaxAge
– MaxAge ≥ 2 × Hello Time + 1 s

The value ((MaxAge/2) - Hello Time) for a ring topology corresponds to the maximum number of components with active Rapid Spanning Tree.

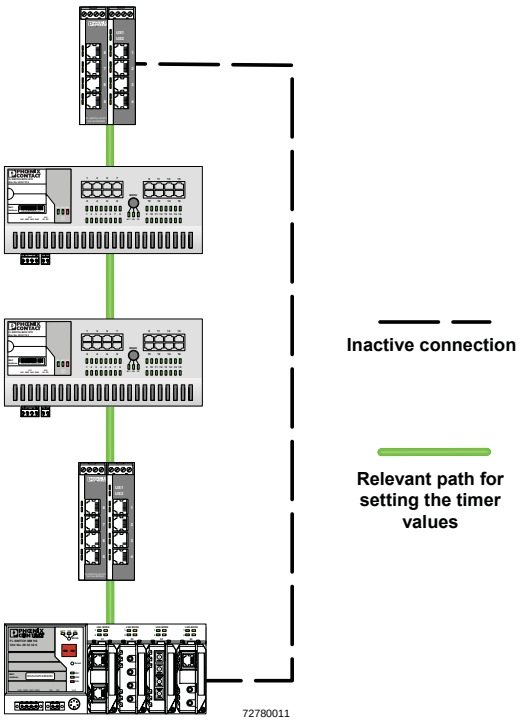

Figure 4-14 Example 1 for the "relevant path"

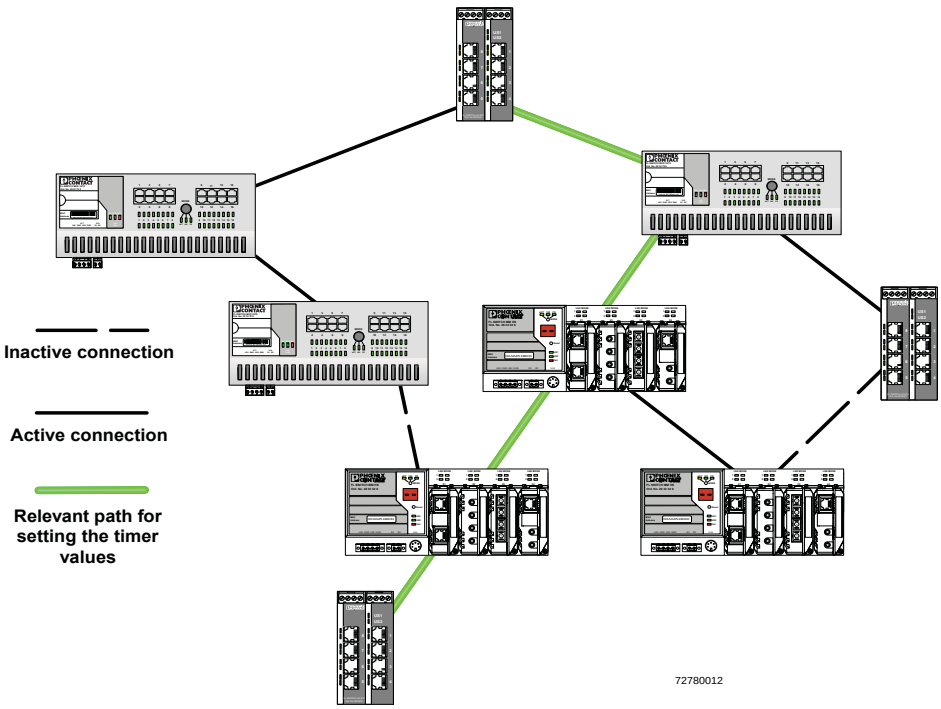

Figure 4-15 Example 2 for the "relevant path"

4.2.4.6 Reconfiguration times

The reconfiguration time for a Rapid Spanning Tree depends on the timer values for MaxAge and Forward Delay.

The minimum reconfiguration time is:
2 × Forward Delay

The maximum reconfiguration time is:
2 × Forward Delay + MaxAge

For the values recommended by the IEEE standard, the value for ten active STP switches along a path beginning with the root switch is between 30 s and 50 s.

Switch-over time response to be expected for Rapid Spanning Tree

Overview of the switch-over time response to be expected for the maximum number of switches within a Spanning Tree segment.

MaxAge	Hello Time	Forward Delay	Maximum number of active RSTP switches	Switch-over time
10 s	1 s	≥ 6 s	5	22 s
20 s	1 s	≥ 11 s	10	42 s
30 s	1 s	≥ 16 s	15	62 s
40 s	1 s	≥ 21 s	20	82 s
20 s	***2 s***	***15 s***	***9***	***50 s***

Bold/italic **= Default**

4.2.5 Configuration notes for Rapid Spanning Tree

In contrast to the Spanning Tree method, the Rapid Spanning Tree method supports event-controlled actions that are no longer triggered based on a timer.

If a line fails (link down), the Rapid Spanning Tree method can respond more quickly to this failure and thus the switch-over time can be kept low.

A link down or link up must be detected at the switch so that the RSTP switches can detect a line failure and a restored line more quickly. Please take into consideration, in particular, paths where media converters are used. If required, media converters offer setting options to transmit the link status of the fiber optic side to the twisted pair side.

If a link down is not detected at the switch, due to the cable interrupt between the media converters, and if no link down is forced at the switch, timer-based detection is activated, which may result in longer switch-over times.

- For short switch-over times, structure your network in such a way that a maximum of seven switches are located in a cascade up to the root switch. The switch-over times can range from 2 to 8 s.
- Use priority assignment to specify a central switch as the root.
- It is also recommended to assign a switch as the backup root.
- For short switch-over times, all switches should support the Rapid Spanning Tree Protocol.

4.3 Large Tree support

4.3.1 Large Tree support

If RSTP is operated using the default values, it is suitable for up to seven switches along the relevant path (see Figure 4-14 on page 4-17 and Figure 4-15 on page 4-17 as an example for the relevant path). The RSTP protocol would therefore be possible in a ring topology for up to 15 switches.

The "Large Tree Support" option makes the ring topology suitable for 28 switches along the relevant path if RSTP is used. The Large Tree support option could provide an RSTP ring topology with up to 57 devices. When using Large Tree support, please note the following:

- In the Large Tree support RSTP topology, do not use devices that do not support Large Tree support.
- Enable the Large Tree support option on all devices.
- If RSTP is to be activated as the redundancy mechanism in an existing network with more than seven switches along the relevant path, then the Large Tree support option must first be enabled on all devices.
- It is recommended that Large Tree support is not activated in networks with less than seven switches along the relevant path.

4.3.2 Properties of Large Tree support

– 28 switches below the root
– Rings with a total of 57 switches

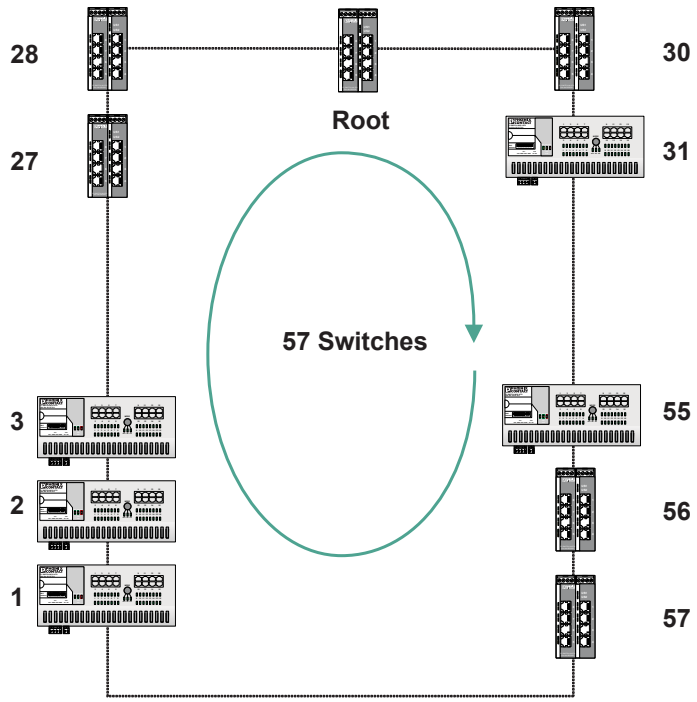

Figure 4-16 Topology example for Large Tree support

5 Multicast filtering

5.1 Basics

Multicast

Multicast applications, unlike unicast applications with point-to-point communication, do not transmit their data with the MAC address of the destination, but with an independent multicast group address. Always using wireless communication, a station transmits **one** data packet that is received by one or more receiving stations.

Advantages:

1. If, for example, a data packet of a transmitter is to be transmitted to eight receivers, the same packet does not have to be sent eight times to the addresses of all eight devices. Instead it only needs to be sent once to the address of the multicast group that includes the eight devices.
2. When using multicast communication and filtering, the bandwidth requirement for data transmission is reduced because each packet is only transmitted once.

5.2 Dynamic multicast groups

5.2.1 Internet Group Management Protocol (IGMP)

IGMP on Layer 3

The Internet Group Management Protocol describes a method for distributing information via multicast applications between routers and termination devices at IP level (Layer 3).

When starting a multicast application, a network device transmits an IGMP membership report and thus announces its membership of a specific multicast group. A router collects these membership reports and thus maintains the multicast groups of its subnetwork.

Query

At regular intervals, the router sends IGMP queries. This prompts the devices with multicast receiver applications to send another membership report.

> The "IGMP Query" function only transmits in the management VLAN and only stops if there is a better querier in the management VLAN.

The router enters the IP multicast group address from the report message in its routing table. This means that frames with this IP multicast group address in the destination address field are only transferred according to the routing table. Devices that are no longer members of a multicast group log out with a leave message (IGMP Version 2 or later) and no longer send report messages.
The router also removes the routing table entry if it does not receive a report message within a specific time (aging time). If several routers with active IGMP query function are connected to the network, they determine among themselves which router performs the query function. This depends on the IP addresses, as the router with the lowest IP address continues to operate as the querier and all the other routers no longer send query messages. If these routers do not receive a new query telegram within a specific period of time, they themselves become queriers again. If there are no routers in the network, a suitably equipped switch can be used for the query function.

IGMP snooping

A switch which connects a multicast receiver with a router can read and evaluate IGMP information using the IGMP snooping method. IGMP snooping translates IP multicast group addresses into multicast MAC addresses, so that the IGMP function can also be detected by Layer 2 switches. The switch enters the MAC addresses of the multicast receivers, which were obtained from the IP addresses by IGMP snooping, in its own multicast filter table. Thus the switch filters multicast packets of known multicast groups and only forwards packets to those ports to which corresponding multicast receivers are connected.

IGMP snooping can only be used on Layer 2 if all termination devices send IGMP messages. The IP stack of multicast-compatible termination devices with applications linked to a multicast address automatically sends the relevant membership reports.

IGMP snooping operates independently of the Internet Group Management Protocol (IGMP).

5.2.1.1 Extended multicast filtering

If IGMP snooping is active, multicast data streams are also detected for which no membership reports of possible recipients are registered. For these multicasts, groups are created dynamically. These multicasts are forwarded to the querier, i.e., the querier port is entered in the group.

If the switch itself is the querier, these multicasts are blocked.

5.2.1.2 "General Multicast Configuration" web page

This web page provides global settings for multicast support. Here, IGMP snooping can be activated and an aging time can be specified for IGMP snooping information.

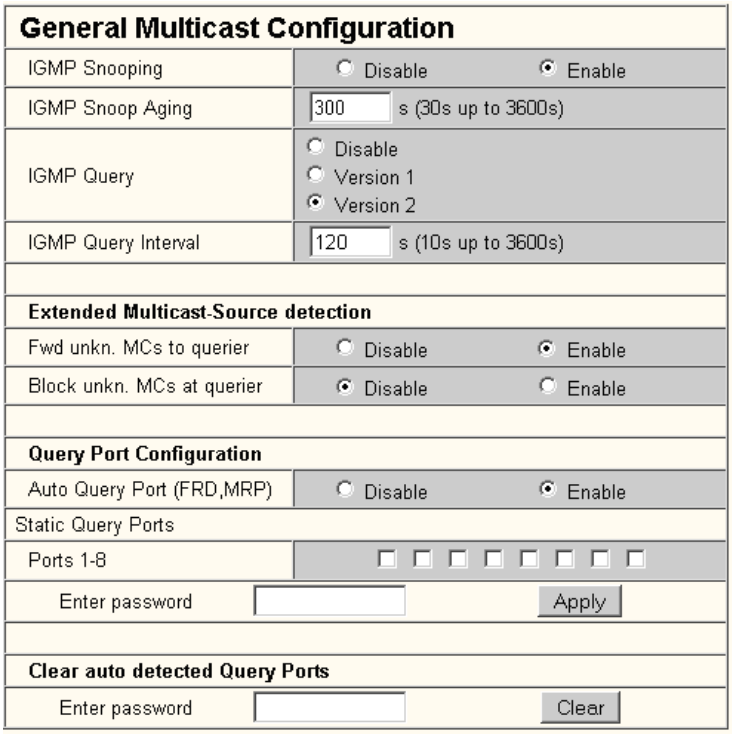

Figure 5-1 "General Multicast Configuration" web page

> Please note that the switch supports 50 multicast groups at any given time.

IGMP Snooping
In IGMP snooping, the switch passively listens in on the IGMP messages that are sent over the network and dynamically creates the appropriate groups. The groups are not saved and will be lost during every power down or when the snooping function is switched off.

IGMP Snoop Aging
IGMP snoop aging is the time period during which membership reports are expected. If this time passes without new membership reports being received, the associated port is deleted from the groups.

IGMP Query
An LMS with activated query function actively sends queries at "query intervals" and evaluates the received reports. The LMS only sends IGMP query reports if IGMP snooping is enabled and only in the management VLAN.

IGMP Query/IGMP Query Interval
A switch with activated query function actively sends queries regarding the version selected under "IGMP Query" at the "IGMP Query Interval" and evaluates the received reports. The switch only sends IGMP query reports if IGMP snooping is enabled and only in the management VLAN.

Extended Multicast Source Detection
(see 5.3 "Multicast source detection" on page 5-5)

Forward unknown Multicasts to querier

Select whether a group which forwards packets to the querier is created for unknown multicast packets.

Block unknown Multicasts at querier

Select whether unknown multicast packets are to be blocked at the querier.

Query Port Configuration

Auto Query Port (FRD, MRP)
Activates the automatic selection of additional query ports by means of fast ring detection and/or MRP. Redundant ports are thereby automatically integrated in every multicast group. In the case of redundancy switch-over, the multicast packets are not blocked because the ports required are already members of the groups.

If this function is activated, the multicast tables are not deleted on redundancy switch-over. Deletion of the multicast tables is triggered when the auto query ports are deactivated in order to force a new multicast group learning process in the event of redundancy switch-over.

Static Query Ports

Select the ports that are static query ports.

Clear auto detected Query Ports

Deletion of the ports automatically assigned to the groups.

5.3 Multicast source detection

Multicast source detection can be used to create dynamic multicast groups without the multicast receiver/membership report sender in the network being active.

5.3.1 Properties of multicast source detection

The following properties apply if IGMP snooping has previously been activated globally.

a) The switch is not the IGMP querier in the network segment because the querier function is disabled or another device has assumed the querier role.

– If the switch receives an IGMP query packet, it will save the port via which it received the packet for the IGMP query time and add it to each dynamic multicast group.
– If the switch receives a multicast packet and is still able to create new dynamic multicast groups (upper limit not reached) and it has saved one or more ports via which it received queries, the switch will:
  1. Create a new multicast group for this multicast address, provided one does not already exist
  2. Add the port via which it received the multicast packet and all query ports to this new group
– The multicast groups created as described above are deleted in accordance with the timeout rules. For example, if no more membership reports are received, if the associated port is deleted from the groups or if no port, other than the ports receiving queries, is a member of the group, this group is deleted.

b) The switch is the active querier in the network segment

– If the switch receives a multicast packet and is still able to create new dynamic multicast groups (upper limit not reached) and it has saved one or more ports via which it received queries, the switch will:
  1. Create a new multicast group for this multicast address, provided one does not already exist
  2. Add the port via which it received the multicast packet and all query ports to this new group
– The multicast groups created as described above are deleted in accordance with the timeout rules. For example, if no more membership reports are received, if the associated port is deleted from the groups or if no port, other than the ports receiving queries, is a member of the group, this group is deleted.

5.3.1.1 Multicast registration with GMRP

GMRP (GARP Multicast Registration Protocol) enables the distribution of multicast group destination addresses to Layer 2 devices that do not support IGMP snooping. After a multicast device has registered with the switch (e.g., by means of an IGMP report), the switch sends a GMRP broadcast packet to all GARP switches, which contains the multicast group destination address and indicates whether the switch is joining or leaving the group. The other switches can thus create their own multicast groups and add the receive port to the group. By default, GMRP is activated as soon as IGMP snooping is activated. The switches that receive the GMRP packets do not have to support IGMP snooping in order to receive and evaluate the GMRP packets.

6 Virtual Local Area Network (VLAN)

6.1 Basics

VLAN

A VLAN is a closed network, which is separated logically/functionally rather than physically from the other networks. A VLAN creates its own broadcast and multicast domain, which is defined by the user according to specified logical criteria. VLANs are used to separate the physical and the logical network structure.

– Data packets are only forwarded within the relevant VLAN.
– The members of a VLAN can be distributed over a large area.

The reduced propagation of broadcasts and multicasts increases the available bandwidth within a network segment. In addition, the strict separation of the data traffic increases system security.

A router or similar Layer 3 device is required for data traffic between VLANs.

For the switch, the VLANs can be created statically or dynamically. For dynamic configuration, the data frames are equipped with a tag. A tag is an extension within a data frame that indicates the VLAN assignment. If configured correspondingly, this tag can be added during transmission to the first switch in the transmission chain and removed again from the last one. Several different VLANs can thus use the same switches/infrastructure components. Alternatively, termination devices that support VLAN tags can also be used.

6.2 Enabling the VLAN web pages in web-based management

Start web-based management for the switches, e.g., using Factory Manager, switch to the "General Configuration" menu, then the "User Interfaces" page. Activate the "VLAN" function and confirm by entering your password.

When activating "VLAN" under "User Interfaces", the VLAN mechanism is **not** activated. In the WBM menu, the "VLAN" page - under which the function can be configured and activated - is enabled.

When deactivating the VLAN configuration pages under "User Interfaces", the VLAN mechanism is **not** deactivated. The saved VLAN configuration is retained.

6.2.1 Management VLAN ID

The management of the switch is assigned to VLAN 1 by default upon delivery. In addition, all ports are assigned to VLAN 1 by default upon delivery. This ensures that the network-supported management functions can be accessed via all ports.

Make sure that the LM switch is always managed in a VLAN that you can also access.

VLAN ID 1 cannot be deleted and is thus always created on the switch.

If you delete the VLAN in which the LM switch is managed, management is automatically switched to VLAN 1.

The "IGMP Query" function only transmits in the management VLAN and only stops if there is a better querier in the management VLAN.

6.2.2 Changing the management VLAN ID

6.2.2.1 Configuration in transparent mode

1. In WBM, enable the pages for VLAN configuration (WBM: User Interfaces/Virtual LAN).
2. Create the required VLANs on the "Static VLANs" web page.
3. On the "VLAN Port Cfg. Table" web page, assign the ports for incoming packets to individual VLANs using the VLAN ID.
4. On the "IP Configuration" web page, the desired management VLAN ID can now be set.
5. On the "General VLAN Configuration" web page, set the switch to "Tagging" VLAN mode.
6. Save the configuration on the "General Configuration/Configuration Management" web page and restart the switch.

6.2.2.2 Configuration in tagging mode (usually used to change the management VLAN ID in the event of an existing VLAN configuration)

1. Connect the PC directly to the switch to be configured via a port (A) whose VLAN ID is set to "1".
2. Update the firmware to Version 3.30 or later and restart the switch.
3. Place another port (B) in the desired management VLAN. Port B must be an "untagged member" of the desired management VLAN. Set the corresponding port VLAN ID, if necessary.
4. Set the desired VLAN ID as the management VLAN.
5. Connect your PC to the switch via port B and save the configuration.

6.3 General VLAN Configuration

Basic settings for VLAN operation can be made on the "Switch Station/VLAN/General VLAN Configuration" web page.

Transparent

In "Transparent" mode, the switch processes the incoming data packets as described in the "Frame switching" section (see Section 2.2 on page 2-8). Neither the structure nor the contents of the data packets is changed. The information about VLAN assignment from a tag that may be contained in the data packet is ignored.

Tagging

In "Tagging" mode, incoming packets are received according to the specified VLAN rules, a VLAN tag is added, if required, and the packet is then processed by the switch and the management level according to the information in the tag. When transmitting Ethernet packets, the switch observes the rules for the relevant VLAN or the relevant output port.

The management VLAN ID specifies in which VLAN the switch can be accessed if it is operating in "Tagging" VLAN mode.

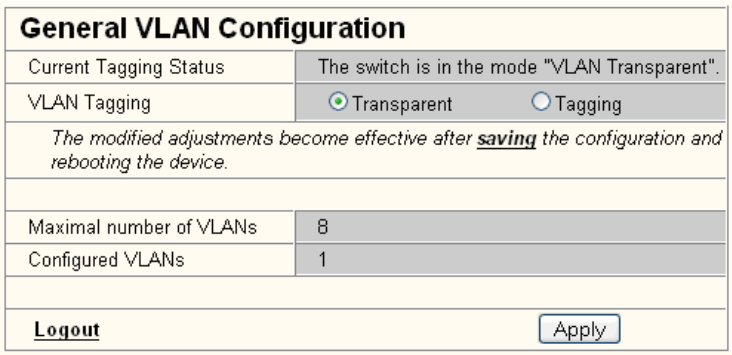

Figure 6-1 "General VLAN Configuration" menu

The switch supports a maximum of 8 different VLANs.

After switching the VLAN mode from "Tagging" to "Transparent" or vice versa, the active configuration must be saved and a device reset triggered so that the modification becomes active. The current valid state can be read in the "Current Tagging Status" line.

6.4 Current VLANs

The "Current VLANs" web page provides an overview of the VLANs currently set up. In addition, refer to the table for the VLAN in which the switch is actually managed. All static and dynamic VLANs are listed here. A distinction is made between tagged (T) and untagged (U) group members, as well as non-members (-) (see possible states on page 6-5).

Current VLANs

VID	Status	Group	Membership							
1	static/ Management Vlan	Ports 1-8	U	U	U	U	U	U	U	U
12	static	Ports 1-8	-	T	T	-	-	-	-	-
24	static	Ports 1-8	-	-	-	-	T	T	-	-

(T=Tagged, U=Untagged, -=Non Member)

This table, indicates, out of which ports, each VLAN's data is to be sent, using configuration data entered manually (i.e. web page "Static VLANs).

Figure 6-2 "Current VLANs" web page

When the maximum number of created VLANs (static and/or dynamic) is reached, the following text appears below the key for the member states: "The switch supports only 8 VLANs! Further VLANs will be refused!".

VLAN 1 is always created statically and all ports are added to it as untagged members.

6.4.1 Static VLANs

Static VLANs can be created on this web page. Up to 7 new VLANs can be created (VLAN 2 to VLAN 8). If more are created, a corresponding message will be displayed.
VLAN 1 is always created statically and all ports are added to it as untagged members. By default upon delivery, with "Tagging" VLAN mode activated, network-based management interfaces (WBM, Telnet, and SNMP) are only available from VLAN 1. This means that in order to access the management interfaces, you must either implement data traffic in tagged mode without VLAN tag, where the switch is accessed via ports using the VLAN ID or you must use data traffic with a VLAN tag with ID 1.

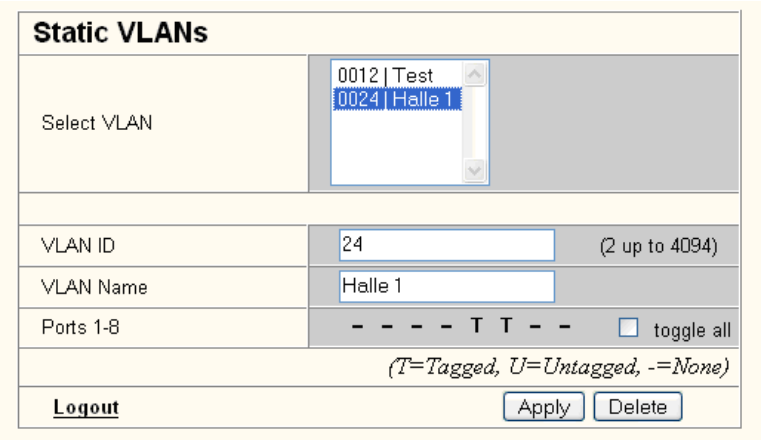

Figure 6-3 "Static VLANs" menu

On this web page you can create static VLANs by assigning a VLAN ID and VLAN name. The ports are then assigned to the individual VLANs by selecting the relevant VLAN and clicking on the character in the "Ports 1-8" line that indicates the current port status. Various options are selected by clicking on the status several times. By clicking on "toggle all", all available ports in the relevant port group change their status.

The possible states are:

T = Tagged

Ports with "Tagged" status belong to the selected VLAN and packets are sent to this port with VLAN tag.

U = Untagged

Ports with "Untagged" status belong to the selected VLAN and packets are sent to this port without VLAN tag. An "Untagged" port cannot belong to multiple VLANs - otherwise there is no logical division (except VLAN 1).

- = None

Ports with "None" status are not integrated into the VLAN.

6.4.2 VLAN Port Configuration

Port-specific VLAN settings can be made on this web page.

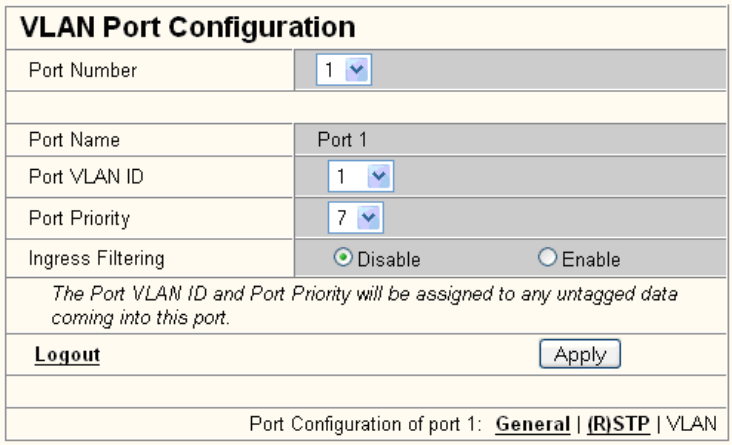

Figure 6-4 "VLAN Port Configuration" menu

If "Ingress Filtering" is set to "Enable", the switch rejects data packets received at this port if the port is not a "tagged member" or "untagged member" of the VLAN with the VLAN ID contained in the tag of the packet.

Port Priority

– A corresponding tag indicating the priority is added to packets without tags.

Port VLAN ID

– Assignment of received, untagged packets to a VLAN. The corresponding VLAN ID must be set for the ports that are "untagged members" of a VLAN (see "Example: Communication between termination devices via VLAN" on page 6-8).

Only IDs of existing VLANs can be set as the port VLAN ID. If a VLAN is deleted, all port VLAN IDs that are set to this VLAN are reset to the default VLAN ID "1".

6.4.3 VLAN Port Configuration Table

This web page provides an overview of the main VLAN settings for the ports. Clicking on the relevant port number opens the "VLAN Port Configuration" web page, where the settings can be modified.

This table can be used to assign incoming packets to the created VLANs if the packets reach the port without VLAN tag.

VLAN Port Configuration Table

Port	VID	Prio	Ingress Filtering
1	1	7	disable
2	1	0	disable
3	1	0	disable
4	1	5	enable
5	1	0	disable
6	1	0	disable
7	1	0	disable
8	1	0	disable

This table indicates what Port VLAN ID and Priority will be assigned to any untagged data coming in each port.

Logout Apply

Figure 6-5 "VLAN Port Configuration Table" menu

6.5 Setting up static VLANs

Security recommendation: Instead of using VLAN 1 for management, it is recommended that a new separate VLAN is created for management. Make sure that the administrator has access to this VLAN.

Warnings displayed when setting up/configuring VLANs indicate configuration errors:

– An "untagged" port belongs to **multiple** VLANs.

The port assignment (untagged) and VID do **not** match.

In order to set up a VLAN, the switches involved must be configured accordingly. In the following example, data traffic is to be enabled in VLAN 5 between termination devices A and B.

The type of termination device must be taken into consideration: VLAN-compatible (processes tags) or not VLAN-compatible (does not process tags). In the example, two types of termination device are take into consideration.

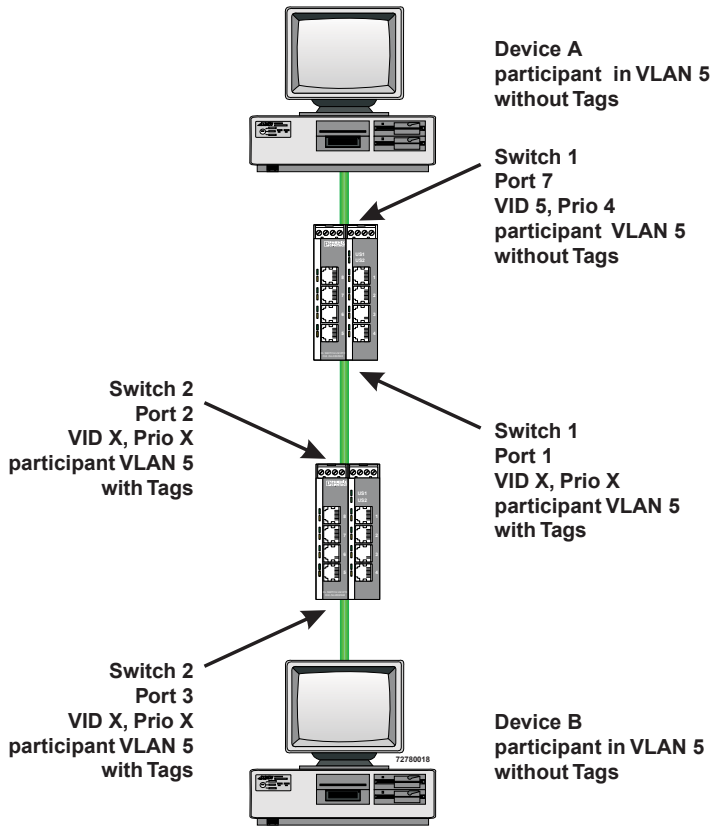

Figure 6-6 Example: Communication between termination devices via VLAN

Switch configuration

1. Set both switches to "VLAN Tagging" mode, save, and restart devices.
2. On switch 1, set up VLAN 5 and specify port 7 as an "untagged" member and port 1 as a "tagged" member.
3. For port 7 at switch 1, set the port VLAN ID to 5 and the port priority to any.
4. On switch 2, set up port 2 and port 3 as "tagged" members of VLAN 5.

Both termination devices now communicate via the network path shown in the example without other switch ports forwarding the broadcast packets for both termination devices, for example.

6.6 VLAN and (R)STP

When using (R)STP and VLAN simultaneously, please note the following:

– (R)STP is **not** based on VLANs
– (R)STP creates a loop-free topology in the form of a tree structure

In the event of static VLAN configuration, all possible redundant data paths must be taken into consideration in the configuration. All possible backbone ports of the network (not the termination device ports) must be inserted in all available VLANs as "tagged" members. This ensures that for every possible tree structure that can be generated by (R)STP, every VLAN can be accessed by every switch.

A typical configuration is illustrated in the following diagram:

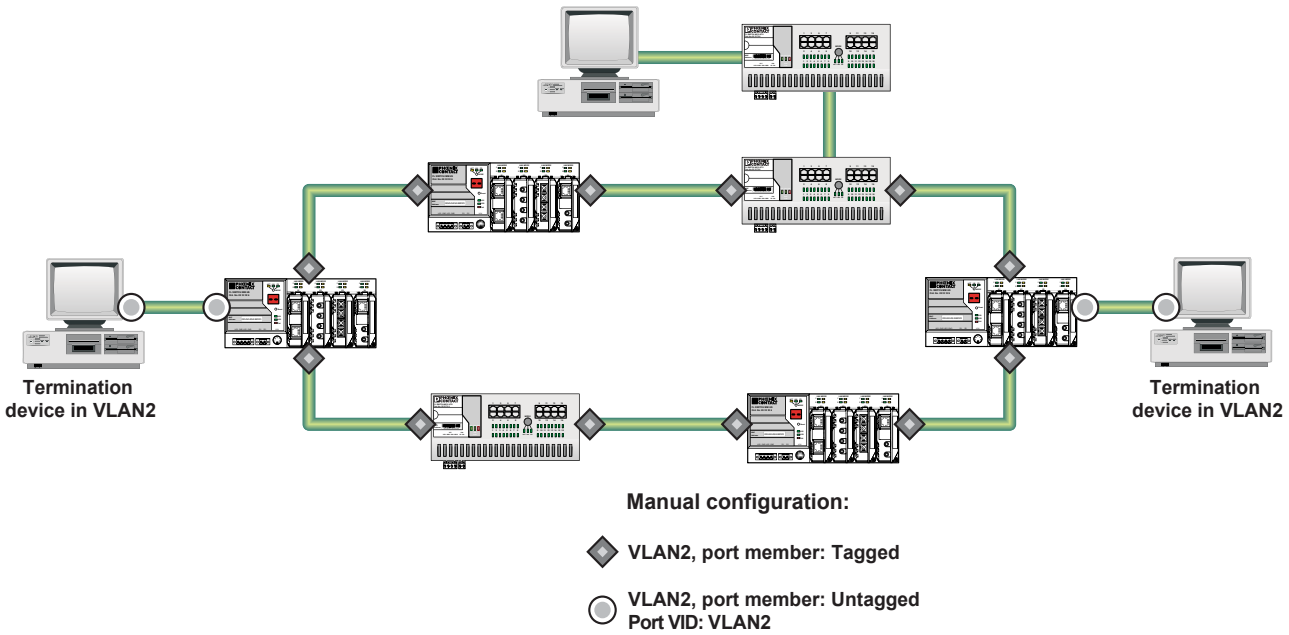

Figure 6-7 Typical configuration for VLAN and (R)STP

7 Technical data

General data	
Function	Lean Managed Ethernet/Fast Ethernet Switch; conforms to standard IEEE 802.3
Switch principle	Store-and-forward
PROFINET conformance	Class A
Data throughput with 100 Mbps full duplex	148,809 packets with 46 (64) byte packet size 8127 packets with 1500 (1518) byte packet size
Address table	For 1023 MAC addresses
SNMP	Version 1 and 2
Supported MIBs	SNMPv2 MIB, RSTP MIB, and private SNMP objects from Phoenix Contact
Housing dimensions (width x height x depth)	45 mm x 99 mm x 112 mm
Permissible operating temperature	-40°C to +70°C
Permissible storage temperature	-40°C to +85°C
Degree of protection	IP20, DIN 40050, IEC 60529
Protection class	Class 3 VDE 0106; IEC 60536
Maximum humidity (operation)	30% to 95%, non-condensing
Maximum humidity (storage/transport)	30% to 95%, non-condensing
Air pressure (operation)	86 kPa to 108 kPa, 1500 m above sea level
Air pressure (storage)	66 kPa to 108 kPa, 3500 m above sea level
Preferred mounting position	Perpendicular to a standard DIN rail
Connection to protective earth ground	Snapped onto a grounded DIN rail/via COMBICON (optional)
Weight	230 g, typical

Supply voltage	
Connection	Via COMBICON; maximum conductor cross section = 2.5 mm^2
Nominal value	24 V DC
Permissible ripple	3.6 V_{PP} within the permissible voltage range
Permissible voltage range	18.5 V DC to 30.5 V DC
Current consumption at U_S at nominal value	170 mA, typical; 250 mA, maximum
Test voltage	500 V DC for one minute
Protection against polarity reversal	Present
Power consumption	4 W, typical; 6 W, maximum

Interfaces	
Ethernet interfaces in RJ45 format	
Number	8 or 4
Connection format	8-pos. RJ45 female connector on the switch
Connection medium	Twisted pair cable with a conductor cross section of 0.14 mm^2 to 0.22 mm^2
Cable impedance	100 ohms
Transmission speed	10/100 Mbps
Ethernet interface (SC)	
Number	0 or 2
Connection format	SC duplex female connector on the switch
Wavelength	1300 nm
Laser protection	Class 1 according to DIN EN 60825-1:2001-11
Minimum transmission length, including 3 dB system reserve, when using **multi**-mode	6.4 km fiberglass with F-G 50/125 0.7 dB/km F1200 2.8 km fiberglass with F-G 50/125 1.6 dB/km F800 11 km fiberglass with F-G 62.5/125 0.7 dB/km F100 3.0 km fiberglass with F-G 62.5/125 2.6 dB/km F1000
Maximum **multi**-mode transmission power	-14 dBm
Minimum **multi**-mode transmission power	-20 dBm at 62.5/125 µm, -23.5 at 50/125 µm

Interfaces (continued)

Minimum **multi**-mode receiver sensitivity	-31 dBm
Multi-mode overrange	-14 dBm
Minimum transmission length, including 3 dB system reserve, when using **single**-mode	36 km fiberglass with F-G 9/125 0.36 dB/km 32 km fiberglass with F-G 9/125 0.4 dB/km 26 km fiberglass with F-G 9/125 0.5 dB/km
Maximum **single**-mode transmission power	-8 dBm
Minimum **single**-mode transmission power	-15 dBm
Minimum **single**-mode receiver sensitivity	-31 dBm
Single mode overrange	-7 dBm
Transmission speed	100 Mbps
RS-232 communication interface	
Number	1
Connection format	Mini-DIN female connector on the switch
Alarm contact	
Voltage	24 V DC
Current carrying capacity	100 mA, maximum

Mechanical tests

Shock test according to IEC 60068-2-27	Operation: 25g, 11 ms period, half-sine shock pulse Storage/transport: 50g, 11 ms period, half-sine shock pulse
Vibration resistance according to IEC 60068-2-6	Operation/storage/transport: 5g, 150 Hz, criterion 3
Free fall according to IEC 60068-2-32	1 m

Conformance with EMC directives

Developed according to IEC 61000-6-2	
Noise emission according to EN 55022:1998 + A1:2000 + A2:2003 (interference voltage)	Class A (industrial applications)
Noise emission according to EN 55011:1998 + A1:1999 + A2:2002 (electromagnetic interference)	Class A (industrial applications)
Immunity to interference according to EN 61000-4-2 (IEC 1000-4-2) (ESD)	Requirements according to DIN EN 61000-6-2
Contact discharge:	Test intensity 2, criterion B
Air discharge:	Test intensity 3, criterion B
Indirect discharge:	Test intensity 2, criterion B
Noise immunity according to EN 61000-4-3 (IEC 1000-4-3) (electromagnetic fields)	Requirements according to DIN EN 61000-6-2 Test intensity 3, criterion A
Noise immunity according to EN 61000-4-4 (IEC 1000-4-4) (burst)	Requirements according to DIN EN 61000-6-2
Data cables:	Test intensity 2, criterion B
Power supply:	Test intensity 3, criterion B
Immunity to interference according to EN 61000-4-5 (IEC 1000-4-5) (surge)	Requirements according to DIN EN 61000-6-2
Data cables:	Test intensity 2, criterion B
Power supply:	Test intensity 1, criterion B
Noise immunity according to EN 61000-4-6 (IEC 1000-4-6) (conducted)	Requirements according to DIN EN 61000-6-2 Test intensity 3, criterion A

Differences between this version and previous versions

Rev. 00 - First version
Rev. 01: LM-E switches added and functions of current firmware added
Rev. 02: Extended to include functions for the current firmware
Rev. 03: New device versions added
Rev. 04: Firmware 3.x added
Rev. 05: Firmware 3.40 added

7.1 Ordering data

Products

Description	Order designation	Order No.	Pcs. / Pkt.
Lean Managed Switch with 5 RJ45 ports	FL SWITCH LM 5TX FL SWITCH LM 5TX-E	2989527 2989336	1 1
Lean Managed Switch with 8 RJ45 ports	FL SWITCH LM 8TX FL SWITCH LM 8TX-E	2832632 2891466	1 1
Lean Managed Switch with 4 RJ45 ports and two FX ports in SC-D format for **multi-mode** fibers	FL SWITCH LM 4TX/2FX FL SWITCH LM 4TX/2FX-E	2832658 2891660	1 1
Lean Managed Switch with 4 RJ45 ports and two FX ports in ST format for **multi-mode** fibers	FL SWITCH LM 4TX/2FX ST FL SWITCH LM 4TX/2FX ST	2989132 2989831	1
Lean Managed Switch with 4 RJ45 ports and two FX ports in SC-D format for **single-mode** fibers	FL SWITCH LM 4TX/2FX SM FL SWITCH LM 4TX/2FX SM-E	2891916 2891864	1 1
Lean Managed Switch with 4 RJ45 ports and two FX ports in ST format for **single-mode** fibers	FL SWITCH LM 4TX/2FX SM ST FL SWITCH LM 4TX/2FX SM ST-E	2989239 2989938	1
Lean Managed Switch with 4 RJ45 ports and one FX port in SC-D format for **multi-mode** fibers	FL SWITCH LM 4TX/1FX FL SWITCH LM 4TX/1FX-E	2989624 2989433	1
Lean Managed Switch with 4 RJ45 ports and one FX port in ST format for **multi-mode** fibers	FL SWITCH LM 4TX/1FX ST FL SWITCH LM 4TX/1FX ST-E	2989721 2989530	1
Lean Managed Switch with 4 RJ45 ports and one FX port in SC-D format for **single-mode** fibers	FL SWITCH LM 4TX/1FX SM FL SWITCH LM 4TX/1FX SM	2989828 2989637	1
Lean Managed Switch with 4 RJ45 ports and one FX port in ST format for **single-mode** fibers	FL SWITCH LM 4TX/1FX SM ST FL SWITCH LM 4TX/1FX SM ST-E	2989925 2989734	1

Accessories

Description	Order designation	Order No.	Pcs. / Pkt.
Configuration cable, for connecting the switch to a PC, RS-232	PRG CAB MINI DIN	2730611	1
Universal end clamp	E/NS 35 N	080088 6	1
Factory Manager startup/diagnostics software	FL SWT	2831044	1
Network monitoring with HMI/SCADA systems	FL SNMP OPC SERVER	2832166	1
Angled patch connector with two RJ45 CAT5e network connections	FL PF 2TX CAT5E	2891165	1
Angled patch connector with eight RJ45 CAT5e network connections	FL PF 8TX CAT5E	2891178	1
Angled patch connector with two RJ45 CAT6 network connections	FL PF 2TX CAT 6	2891068	1
Angled patch connector with eight RJ45 CAT6 network connections	FL PF 8TX CAT 6	2891071	1
Patch cable, CAT**6**, pre-assembled, 0.3 m long	FL CAT6 PATCH 0,3	2891181	10
Patch cable, CAT**6**, pre-assembled, 0.5 m long	FL CAT6 PATCH 0,5	2891288	10
Patch cable, CAT**6**, pre-assembled, 1.0 m long	FL CAT6 PATCH 1,0	2891385	10
Patch cable, CAT**6**, pre-assembled, 1.5 m long	FL CAT6 PATCH 1,5	2891482	10
Patch cable, CAT**6**, pre-assembled, 2.0 m long	FL CAT6 PATCH 2,0	2891589	10
Patch cable, CAT**6**, pre-assembled, 3.0 m long	FL CAT6 PATCH 3,0	2891686	10
Patch cable, CAT**6**, pre-assembled, 5.0 m long	FL CAT6 PATCH 5,0	2891783	10
Patch cable, CAT**6**, pre-assembled, 7.5 m long	FL CAT6 PATCH 7,5	2891880	10
Patch cable, CAT**6**, pre-assembled, 10 m long	FL CAT6 PATCH 10	2891887	10
Patch cable, CAT**6**, pre-assembled, 12.5 m long	FL CAT6 PATCH 12,5	2891369	5
Patch cable, CAT**6**, pre-assembled, 15 m long	FL CAT6 PATCH 15	2891372	5
Patch cable, CAT**6**, pre-assembled, 20 m long	FL CAT6 PATCH 20	2891576	5
Patch cable, CAT5, pre-assembled, 0.3 m long	FL CAT5 PATCH 0,3	2832250	10
Patch cable, CAT5, pre-assembled, 0.5 m long	FL CAT5 PATCH 0,5	2832263	10

Description (continued)	Order designation	Order No.	Pcs. / Pkt.
Patch cable, CAT5, pre-assembled, 1.0 m long	FL CAT5 PATCH 1,0	2832276	10
Patch cable, CAT5, pre-assembled, 1.5 m long	FL CAT5 PATCH 1,5	2832221	10
Patch cable, CAT5, pre-assembled, 2.0 m long	FL CAT5 PATCH 2,0	2832289	10
Patch cable, CAT5, pre-assembled, 3.0 m long	FL CAT5 PATCH 3,0	2832292	10
Patch cable, CAT5, pre-assembled, 5.0 m long	FL CAT5 PATCH 5,0	2832580	10
Patch cable, CAT5, pre-assembled, 7.5 m long	FL CAT5 PATCH 7,5	2832616	10
Patch cable, CAT5, pre-assembled, 10.0 m long	FL CAT5 PATCH 10	2832629	10
Color coding for FL CAT5/6 PATCH ..., black	FL PATCH CCODE BK	2891194	20
Color coding for FL CAT5/6 PATCH ..., brown	FL PATCH CCODE BN	2891495	20
Color coding for FL CAT5/6 PATCH ..., blue	FL PATCH CCODE BU	2891291	20
Color coding for FL CAT5/6 PATCH ..., green	FL PATCH CCODE GN	2891796	20
Color coding for FL CAT5/6 PATCH ..., gray	FL PATCH CCODE GY	2891699	20
Color coding for FL CAT5/6 PATCH ..., red	FL PATCH CCODE RD	2891893	20
Color coding for FL CAT5/6 PATCH ..., violet	FL PATCH CCODE VT	2891990	20
Color coding for FL CAT5/6 PATCH ..., yellow	FL PATCH CCODE YE	2891592	20
Lockable security element for FL CAT5/6 PATCH ...	FL PATCH GUARD	2891424	20
Color coding for FL PATCH GUARD, black	FL PATCH GUARD CCODE BK	2891136	12
Color coding for FL PATCH GUARD, blue	FL PATCH GUARD CCODE BU	2891233	12
Color coding for FL PATCH GUARD, green	FL PATCH GUARD CCODE GN	2891631	12
Color coding for FL PATCH GUARD, orange	FL PATCH GUARD CCODE OG	2891330	12
Color coding for FL PATCH GUARD, red	FL PATCH GUARD CCODE RD	2891738	12
Color coding for FL PATCH GUARD, turquoise	FL PATCH GUARD CCODE TQ	2891534	12
Color coding for FL PATCH GUARD, violet	FL PATCH GUARD CCODE VT	2891835	12
Color coding for FL PATCH GUARD, yellow	FL PATCH GUARD CCODE YE	2891437	12
Key for FL PATCH GUARD	FL PATCH GUARD KEY	2891521	1
Security element for FL CAT5/6 PATCH ...	FL PATCH SAFE CLIP	2891246	20

Phoenix Contact GmbH & Co. KG
Flachsmarktstr. 8
32825 Blomberg
Germany

+ 49 5235 - 3-00

+ 49 5235 - 3-41200

www.phoenixcontact.com

Worldwide locations:
www.phoenixcontact.com/salesnetwork

HOTLINE:

Should problems occur that cannot be resolved with the help of this documentation, please contact our hotline:

+ 49 5281 9-462888

factoryline-service@phoenixcontact.com

REVISIONS			
REV.	DESCRIPTION	DATE	APPROVED
A	INITIAL RELEASE	2/02/2006	BEM
B	CHANGED TERMINAL AND WIRES CORRECTED PANEL CUTOUT DIM	11/10/2010	
C	ADDED APPROVALS TO PRINT	8/8/2012	CAM

PANEL CUTOUT

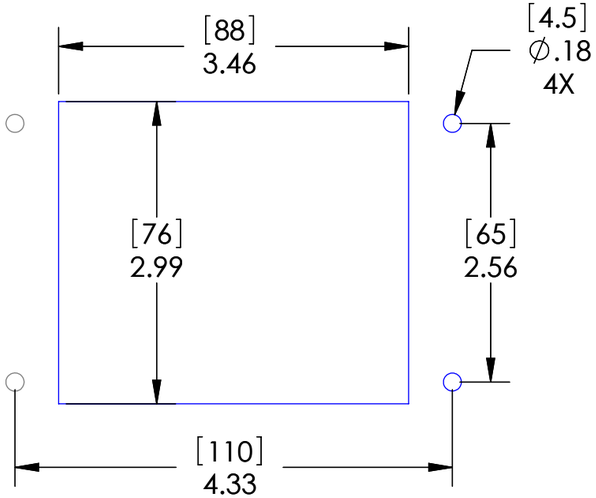

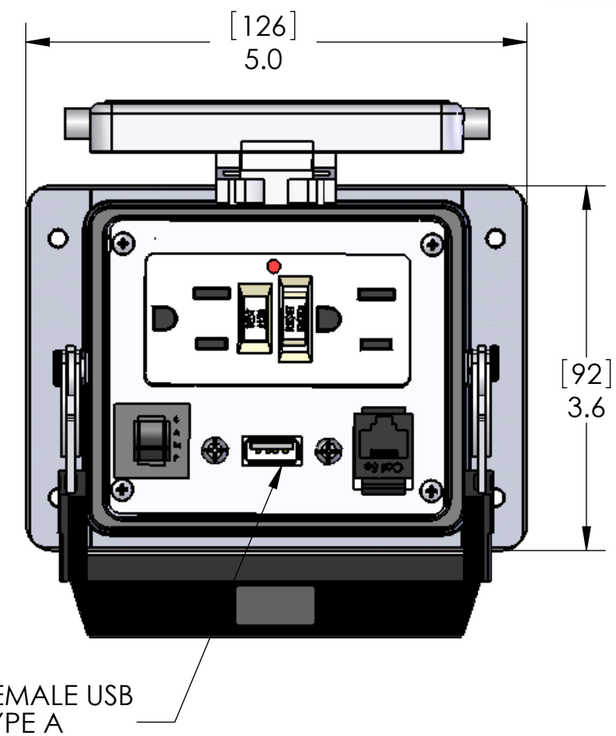

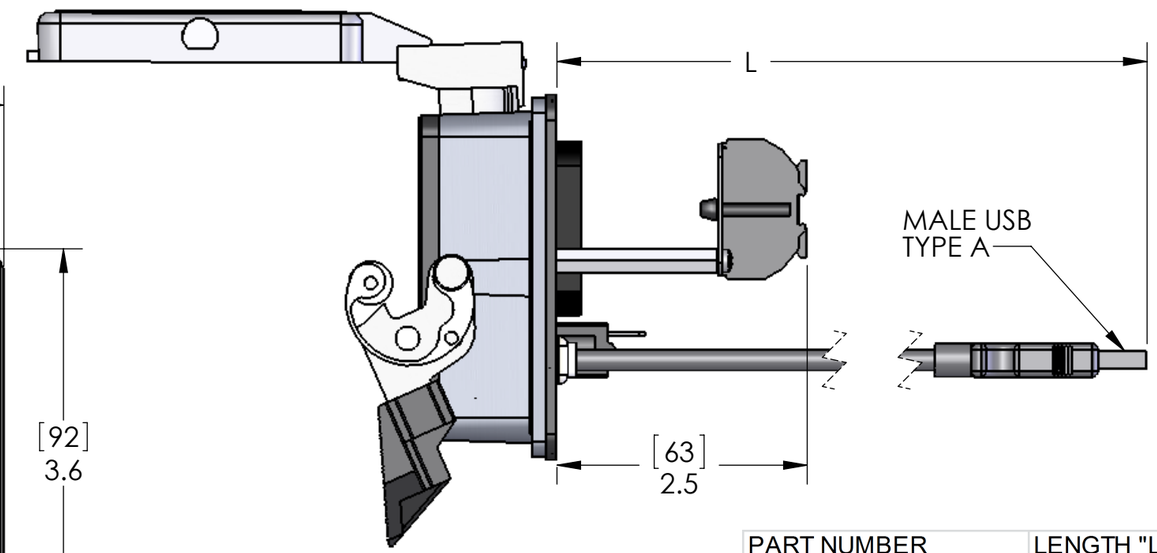

PART NUMBER	LENGTH "L"
GF-RJ45-USB-03-R-32	3 FEET
GF-RJ45-USB-06-R-32	6 FEET
GF-RJ45-USB-10-R-32	10 FEET

HOUSING MATERIALS	
BODY:	EPOXY COATED DIE CAST ALUMINUM
GASKET:	THERMOPLASTIC ELASTOMER
HANDLE:	POLYAMIDE
LEVERS:	STAINLESS STEEL
APPROVALS	
US	UL RECOGNIZED
CANADA	C-UL RECOGNIZED

PIC RATINGS	
VOLTS:	125V
AMPS:	3A
SCCR:	10kA
NEMA/UL:	4, 4X, 12

STANDARD CONFIGURATIONS UNLESS OTHERWISE NOTED		
CONN. TYPE	EXTERIOR	INTERIOR
RJ45	CAT 5 JACK	CAT 5 JACK
USB	TYPE A FEMALE	TYPE A MALE

PROPRIETARY AND CONFIDENTIAL
THE INFORMATION CONTAINED IN THIS DRAWING IS THE SOLE PROPERTY OF MENCOM CORPORATION. ANY REPRODUCTION IN PART OR AS A WHOLE WITHOUT THE WRITTEN PERMISSION OF MENCOM CORPORATION IS PROHIBITED.

UNLESS OTHERWISE SPECIFIED:
DIMENSIONS ARE IN INCHES &[MM]
MATERIAL
FINISH
DO NOT SCALE DRAWING

	NAME
DRAWN	CAM
CHECKED	
ENG APPR.	
MFG APPR.	
Q.A.	
COMMENTS:	

MENCOM CORPORATION

TITLE:

SIZE	DWG. NO.	REV
B	GF-RJ45-USB-ZZ-R-32	C

SCALE: 2:3 | WEIGHT: | SHEET 1 OF 1

E-Stops (Assembled)

Assembled E-Stops

A V (L) D 3 (99) 11 (D) N - R - (24V)

Function
V: Pushlock Turn Reset
Y: Push-Pull

Illumination
Blank: None
L: Illuminated

Series Designation
D: TWTD Series

Button/Lens Size
3: 40mm Mushroom

Illuminated Circuit (illuminated unit only)
99: Full Voltage (lamp determines voltage)
126:120V AC Step Down Transformer
246: 240V AC Step Down Transformer
486: 480V AC Step Down Transformer

Lamp Voltage
(full voltage illuminated units only)
6V: 6V AC/DC
12V: 12V AC/DC
24V: 24V AC/DC
120V: 120V AC/DC
240V: 240V AC/DC

Button/Lens Color
A: Amber R: Red W: White
G: Green S: Blue Y: Yellow

Lamp Type
(illuminated units only)
Blank: Incandescent
D: LED

Contact Arrangement
10: 1NO 01: 1NC
20: 2NO 02: 2NC
11: 1NO/1NC 22: 2NO/2NC

1. Use only when interpreting part numbers. Do not use for developing part numbers.
2. Custom contact configurations available, contact IDEC for details.

E-Stops (Assembled)

Part Numbers: E-Stop Switches

Style		Contacts	Part Number
Ø 40mm Pushlock Turn Reset	Non-Illuminated	1NO 1NC 1NO-1NC 2NO 2NC	AVD310N-R* AVD301N-R* AVD311N-R* AVD320N-R* AVD302N-R*
Ø 40mm Illuminated Pushlock Turn Reset	Full Voltage	1NO-1NC 2NO 2NC	AVLD39911⑤N-R-③* AVLD39920⑤N-R-③* AVLD39902⑤N-R-③*
	Transformer	1NO-1NC 2NO 2NC	AVLD3 ④ 11⑤N-R* AVLD3 ④ 20⑤N-R* AVLD3 ④ 02⑤N-R*
Ø 40mm Push-Pull	Non-Illuminated	1NO 1NC 1NO-1NC 2NO 2NC	AYD310N-① AYD301N-① AYD311N-① AYD320N-① AYD302N-①
Ø 40mm Push-Pull	Full Voltage	1NO-1NC 2NO 2NC	AYLD39911⑤N-②-③ ** AYLD39920⑤N-②-③ ** AYLD39902⑤N-②-③ **
	Transformer	1NO-1NC 2NO 2NC	AYLD3 ④ 11⑤N-② ** AYLD3 ④ 20⑤N-② ** AYLD3 ④ 02⑤N-②**
Ø 40mm Momentary Push-Pull (3-position)	Full Voltage	1NO-1NC 1NC-1LB†	AYLD229911⑤N-②-③ -TK962 AYLD229902S⑤N-②-③-TK962
	Transformer	1NO-1NC 1NC-1LB†	AYLD22 ④ 11⑤N-②-TK962 AYLD22 ④ 02S⑤N-②-TK962

Part Numbers: Unibody E-Stops

Style		Contacts	Part Number
Ø 40mm Pushlock Turn Reset (available in Red only)		1NO-1NC 2NC	HN1E-BV4F11-R* HN1E-BV4F02-R*
Illuminated Ø 40mm Pushlock Turn Reset (available in Red only)		1NO-1NC 2NC	HN1E-LV4F11Q⑤-R-③ HN1E-LV4F02Q⑤-R-③

1. ** Available in Red only.*
2. ***Not available in blue.*
3. *In place of ③, specify Full Voltage Code.*
4. *With single unit construction, the positive action contacts are integrated in the body of the switch. This provides an extra degree of safety and reliability for critical emergency stop functions.*
5. *For nameplates and accessories, see page A3-96.*
6. *For dimensions, see page A3-100.*
7. *For sub-assembly part numbers, see next page.*
8. *HN1E series E-stops comply with EN418, the IEC "E-Stop Addendum to the Low Voltage Directive," this includes "tamper proof" operation whereby a change of contact state is not possible by "teasing" or "floating" the operator.*

3 Position Push-Pull

Contact	Push	Center	Pull
NC (BST-001)	O	O	X
NC-LB (BST-001S)	O	X	X
NO (BST-010)	X	O	O
NO-EM (BST-010S)	X	X	O

1. *In place of ①, specify the button color code*
2. *In place of ②, specify the lens color code.*
3. *In place of ③, specify the Full Voltage (lamp voltage) Code.*
4. *In place of ④, specify the transformer voltage code.*
5. *In place of ⑤, specify the Lamp Type code.*
6. **Available in red only.*
7. *3 position push-pull available in spring return to center only.*
8. *† The most common configuration for motor starting applications.*
9. *For accessories, see page A4-188.*
10. *For dimensions, see page A4-192.*

① Button Color Code

Color	Code
Black	B
Green	G
Red	R
Blue	S
Yellow	Y

② LED Color Codes

Color	Code
Amber	A
Green	G
Red	R
Blue	S
White	W

③ Full Voltage Code

Voltage	Code
6V AC/DC	6V
12V AC/DC	12V
24V AC/DC	24V
120V AC	120V
240V AC	240V (LED only)

④ Transformer Voltage Codes

Voltage	Code
120VAC	126
240VAC	246
480VAC	486

Transformers step down to 6V.

⑤ Lamp Type Code

Lamp	Code
Incandescent	Blank
LED	D

Pilot Lights (Assembled)

Assembled Pilot Lights

A P D 1 126 D N - R - ( )

Function
P: Pilot Light

Series Designation
D: TWTD Series

Lens Shape
1: Dome

Rated Operational Voltage (Primary)

Transformer Type	Full Voltage Type
126:120V AC	99:Full Voltage
246:240V AC	
486:480V AC	

Lamp Voltage (Full Voltage Only)
6V: 6V AC/DC
12V:12V AC/DC
24V:24V AC/DC
120V:120V AC
240V: 240V AC (LED only)

Lens Color Code
A: Amber
G: Green
R: Red
S: Blue
W: White
Y: Yellow

Lamp Type
Blank: Incandescent Lamp
D: LED Lamp

Use only when interpreting part numbers. Do not use for developing part numbers.

Part Numbers: LED and Incandescent Pilot Lights

Style	Operating Voltage	Part Number	
		LED	Incandescent
Transformer Dome	120V AC 240V AC 480V AC	APD1126DN-② APD1246DN-② APD1486DN-②	APD1126N-② APD1246N-② APD1486N-②
Full Voltage Dome	—	APD199DN-②-③	APD199N-②-③

1. In place of ②, specify the Lens/LED Color Code.
2. In place of ③, specify the Full Voltage Code (lamp voltage).

② Lens Color Code

Color	Code
Amber	A
Green	G
Red	R
Blue	S
White	W
Yellow	Y

③ Full Voltage Code

Voltage	Code
6V AC/DC	6V
12V AC/DC	12V
24V AC/DC	24V
120V AC	120V
240V AC (LED only)	240V

Non-Illuminated Selector Switches (Assembled)

Knob Selector (Non-illuminated)

Key Selector (Non-illuminated)

Lever Selector (Non-illuminated)

Assembled Selector Switches

A S D 2 ( ) ( ) 11 N - ( )

Function
S: Selector Switch

Series Designation
D: TWTD Series

Number of Positions
2: 2-Position
3: 3-Position

Spring Return Action
Blank: Maintained
1: Spring return from Right
2: Spring return from Left
3: 2-Way spring return from Left and Right

Circuit Number
(See Circuit # column of Selector Switch Contact Arrangement Chart on beginning on A4-185.)

Contact Arrangement Code

10: 1NO	01: 1NC
20: 2NO	02: 2NC
40: 4NO	04: 4NC
11: 1NO-1NC	22: 2NO-2NC

Operator Style Code
Blank: Knob Operator
L: Lever Operator
K: Key Operator

Use only when interpreting part numbers. Do not use for developing part numbers.

Non-Illuminated Selector Switches (Assembled) con't

Part numbers: Non-Illuminated 2–Position Selector Switches

Style					Part Number	Part Number	Part Number
Contact	Mounting	Operator Position L	Operator Position R		Maintained	Spring Return from Right	Spring Return from Left
1NO	1 2	0 0	X 0	Knob Lever Key	ASD210N ASD2**L**10N ASD2**K**10N	ASD2110N ASD21**L**10N ASD21**K**10N	ASD2210N ASD22**L**10N ASD22**K**10N
1NC	1 2	X 0	0 0	Knob Lever Key	ASD201N-116 ASD2**L**01N-116 ASD2**K**01N-116	ASD2101N-116 ASD21**L**01N-116 ASD21**K**01N-116	ASD2201N-116 ASD22**L**01N-116 ASD22**K**01N-116
1NO 1NC	1 2	0 X	X 0	Knob Lever Key	ASD211N ASD2**L**11N ASD2**K**11N	ASD2111N ASD21**L**11N ASD21**K**11N	ASD2211N ASD22**L**11N ASD22**K**11N
2NO	1 2	0 0	X X	Knob Lever Key	ASD220N ASD2**L**20N ASD2**K**20N	ASD2120N ASD21**L**20N ASD21**K**20N	ASD2220N ASD22**L**20N ASD22**K**20N
2NC	1 2	X X	0 0	Knob Lever Key	ASD202N-104 ASD2**L**02N-104 ASD2**K**02N-104	ASD2102N-104 ASD21**L**02N-104 ASD21**K**02N-104	ASD2202N-104 ASD22**L**02N-104 ASD22**K**02N-104
2NO 2NC	1 2 3 4	0 X 0 X	X 0 X 0	Knob Lever Key	ASD222N ASD2**L**22N ASD2**K**22N	ASD2122N ASD21**L**22N ASD21**K**22N	ASD2222N ASD22**L**22N ASD22**K**22N
2NO 2NC	1 2 3 4	0 0 X X	X X 0 0	Knob Lever Key	ASD222N-111 ASD2**L**22N-111 ASD2**K**22N-111	ASD2122N-111 ASD21**L**22N-111 ASD21**K**22N-111	ASD2222N-111 ASD22**L**22N-111 ASD22**K**22N-111

Part Numbers: Non-Illuminated 3–Position Selector Switches

Style						Part Number	Part Number	Part Number	Part Number
Contact	Mounting	Operator Position L	Operator Position C	Operator Position R		Maintained 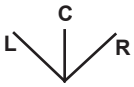	Spring Return from Right 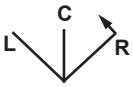	Spring Return From Left 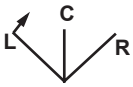	Spring Return Two-Way 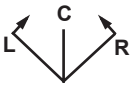
2NO	1 2	X 0	0 0	0 X	Knob Lever Key	ASD320N ASD3**L**20N ASD3**K**20N	ASD3120N ASD31**L**20N ASD31**K**20N	ASD3220N ASD32**L**20N ASD32**K**20N	ASD3320N ASD33**L**20N ASD33**K**20N
2NC	1 2	0 ~~X~~	~~X~~ ~~X~~	~~X~~ 0	Knob Lever Key	ASD302N ASD3**L**02N ASD3**K**02N	ASD3102N ASD31**L**02N ASD31**K**02N	ASD3202N ASD32**L**02N ASD32**K**02N	ASD3302N ASD33**L**02N ASD33**K**02N
2NO 2NC	1 2 3 4	X 0 0 ~~X~~	0 0 ~~X~~ ~~X~~	0 X ~~X~~ 0	Knob Lever Key	ASD322N ASD3**L**22N ASD3**K**22N	ASD3122N ASD31**L**22N ASD31**K**22N	ASD3222N ASD32**L**22N ASD32**K**22N	ASD3322N ASD33**L**22N ASD33**K**22N
2NO 2NC	1 2 3 4	X ~~X~~ 0 0	0 ~~X~~ X 0	X 0 0 X	Knob Lever Key	ASD322N-309 ASD3**L**22N-309 ASD3**K**22N-309	ASD3122N-309 ASD31**L**22N-309 ASD31**K**22N-309	ASD3222N-309 ASD32**L**22N-309 ASD32**K**22N-309	ASD3322N-309 ASD33**L**22N-309 ASD33**K**22N-309
2NO 2NC	1 2 3 4	0 0 0 0	X 0 X 0	0 X 0 X	Knob Lever Key	ASD322N-310 ASD3**L**22N-310 ASD3**K**22N-310	ASD3122N-310 ASD31**L**22N-310 ASD31**K**22N-310	ASD3222N-310 ASD32**L**22N-310 ASD32**K**22N-310	ASD3322N-310 ASD33**L**22N-310 ASD33**K**22N-310
4NO	1 2 3 4	X 0 X 0	0 0 0 0	0 X 0 X	Knob Lever Key	ASD340N ASD3**L**40N ASD3**K**40N	ASD3140N ASD31**L**40N ASD31**K**40N	ASD3240N ASD32**L**40N ASD32**K**40N	ASD3340N ASD33**L**40N ASD33**K**40N
4NC	1 2 3 4	0 ~~X~~ 0 ~~X~~	~~X~~ ~~X~~ ~~X~~ ~~X~~	~~X~~ 0 ~~X~~ 0	Knob Lever Key	ASD304N ASD3**L**04N ASD3**K**04N	ASD3104N ASD31**L**04N ASD31**K**04N	ASD3204N ASD32**L**04N ASD32**K**04N	ASD3304N ASD33**L**04N ASD33**K**04N

1. *The truth table indicates the operating position of contact block when the operator is switched to that position.*
   X = On (closed contacts) O = Off (open contacts)
   ~~X X~~ = Overlapping Contacts: Remain on (closed contacts) when switch is moved between these two positions.
2. *All knob and lever selector switches come in black. Other colors are available by ordering the knob or lever separately.*
3. *Custom contact arrangements available, see page A4-185 or call IDEC for details.*

Illuminated Selector Switches (Assembled)

Assembled Illuminated Selector Switches

A SL D 2 (2) 126 11 D N - 111 - R - 24

Function
SL: Illuminated Selector Switch

Series Designation
D: TWTD Series

Number of Positions
2: 2-Position
3: 3-Position

Spring Return Action
Blank: Maintained
1: Spring return from Right
2: Spring return from Left
3: 2-Way spring return from Left and Right

Rated Operational Voltage (Primary)

Transformer	Full Voltage Type
126:120V AC	99: Full Voltage
246:240V AC	
486:480V AC	

Contact Arrangement

20: 2NO	02: 2NC
40: 4NO	04: 4NC
11: 1NO-1NC	22: 2NO-2NC

Lamp Type
Blank: Incandescent
D: LED

Circuit Code Number
See Circuit # column of Selector Switch Contact Arrangement Charts on page A4-185.

Lens Color Code
A: Amber
G: Green
R: Red
S: Blue
W: White
Y: Yellow

Lamp Voltage (Full Voltage Only)
6V: 6V AC/DC
12V: 12V AC/DC
24V: 24V AC/DC
120V: 120V AC
240V: 240V AC (LED only)

Use only when interpreting part numbers. Do not use for developing part numbers.

Illuminated Selector Switches (Assembled) con't

Part Numbers: Illuminated 2–Position Selector Switches

Style					Maintained	Spring Return From Right	Spring Return From Left
Contact	Mounting	Operator Position L	Operator Position R				
1NO 1NC	1	O	X	transformer	ASLD2 ④11⑤N-②	ASLD21 ④11⑤N-②	ASLD22 ④11⑤N-②
	2	X	O	full voltage	ASLD29911⑤N-②-③	ASLD219911⑤N-②-③	ASLD229911⑤N-②-③
2NO	1	O	X	transformer	ASLD2 ④20⑤N-②	ASLD21 ④20⑤N-②	ASLD22 ④20⑤N-②
	2	O	X	full voltage	ASLD29920⑤N-②-③	ASLD219920⑤N-②-③	ASLD229920⑤N-②-③
2NC	1	X	O	transformer	ASLD2 ④02⑤N-104-②	ASLD21 ④02⑤N-104-②	ASLD22 ④02⑤N-104-②
	2	X	O	full voltage	ASLD29902⑤N-104-②-③	ASLD219902⑤N-104-②-③	ASLD229902⑤N-104-②-③
2NO 2NC	1	O	X	transformer	ASLD2 ④22⑤N-②	ASLD21 ④22⑤N-②	ASLD22 ④22⑤N-②
	2	X	O	full voltage	ASLD29922⑤N-②- ③	ASLD219922⑤N-②-③	ASLD229922⑤N-②-③
	3	O	X				
	4	X	O				
2NO 2NC	1	O	X	transformer	ASLD2 ④22⑤N-11-②	ASLD21 ④22⑤N-111-②	ASLD22 ④22⑤N-111-②
	2	O	X	full voltage	ASLD29922⑤N-111-②-③	ASLD219922⑤N-111-②-③	ASLD229922⑤N-111-②-③
	3	X	O				
	4	X	O				

② Lens/LED Color Codes

Color	Code
Amber	A
Green	G
Red	R
Blue	S
White	W
Yellow	Y

③ Full Voltage Codes

Voltage	Code
6V AC/DC	6V
12V AC/DC	12V
24V AC/DC	24V
120V AC	120V
240V AC (LED only)	240V

④Transformer Voltage Codes

Voltage	Code
120VAC	126
240VAC	246
480VAC	486

6V secondary voltage (uses 6V lamps).

⑤ Lamp Type Code

Lamp	Code
Incandescent	Blank
LED	D

Part Numbers: Illuminated 3–Position Selector Switches

Style						Maintained	Spring Return From Right	Spring Return From Left	Spring Return Two-Way
Contact	Mounting	Operator Position L	Operator Position C	Operator Position R		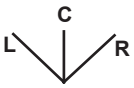	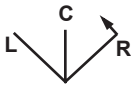	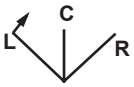	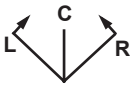
2NO	1	X	O	O	transformer	ASLD3 ④ 20⑤N-②	ASLD31 ④ 20⑤N-②	ASLD32 ④ 20D⑤N-②	ASLD33 ④ 20D⑤N-②
	2	O	O	X	full voltage	ASLD39920⑤N-②-③	ASLD319920⑤N-②- ③	ASLD329920D⑤N-②-③	ASLD339920D⑤N-②-③
2NC	1	O	~~X~~	~~X~~	transformer	ASLD3 ④ 02⑤N-②	ASLD31 ④ 02⑤N-②	ASLD32 ④ 02D⑤N-②	ASLD33 ④ 02D⑤N-②
	2	~~X~~	~~X~~	O	full voltage	ASLD39902⑤N-②-③	ASLD319902⑤N-②-③	ASLD329902D⑤N-②-③	ASLD339902D⑤N-②-③
2NO 2NC	1	X	O	O	transformer	ASLD3 ④ 22⑤N-②	ASLD31 ④ 22⑤N-②	ASLD32 ④ 22D⑤N-②	ASLD33 ④ 22D⑤N-②
	2	O	O	X	full voltage	ASLD39922⑤N-②-③	ASLD319922⑤N-②-③	ASLD329922D⑤N-②-③	ASLD339922D⑤N-②-③
	3	O	~~X~~	~~X~~					
	4	~~X~~	~~X~~	O					
2NO 2NC	1	X	O	X	transformer	ASLD3 ④ 22⑤N-309-②	ASLD31 ④ 22⑤N-309-②	ASLD32 ④ 22D⑤N-309-②	ASLD33 ④ 22D⑤N-309-②
	2	~~X~~	~~X~~	O	full voltage	ASLD39922⑤N-309-②-③	ASLD319922⑤N-309-②-③	ASLD329922D⑤N-309-②-③	ASLD339922D⑤N-309-②-③
	3	O	X	O					
	4	O	O	X					
2NO 2NC	1	O	X	O	transformer	ASLD3 ④ 22⑤N-310-②	ASLD31 ④ 22⑤N-310-②	ASLD32 ④ 22D⑤N-310-②	ASLD33 ④ 22D⑤N-310-②
	2	O	O	X	full voltage	ASLD39922⑤N-310-②-③	ASLD319922⑤N-310-②-③	ASLD329922D⑤N-310-②-③	ASLD339922D⑤N-310-②-③
	3	O	X	O					
	4	O	O	X					
4NO	1	X	O	O	transformer	ASLD3 ④ 40⑤N-②	ASLD31 ④ 40⑤N-②	ASLD32 ④ 40⑤N-②	ASLD33 ④ 40⑤N-②
	2	O	O	X	full voltage	ASLD39940⑤N-②-③	ASLD319940⑤N-②-③	ASLD329940⑤N-②-③	ASLD339940⑤N-②-③
	3	X	O	O					
	4	O	O	X					
4NC	1	O	~~X~~	~~X~~	transformer	ASLD3 ④ 04⑤N-②	ASLD31 ④ 04⑤N-②	ASLD32 ④ 04⑤N-②	ASLD33 ④ 04⑤N-②
	2	~~X~~	~~X~~	O	full voltage	ASLD39904⑤N-②-③	ASLD319904⑤N-②-③	ASLD329904⑤N-②-③	ASLD339904⑤N-②-③
	3	O	~~X~~	~~X~~					
	4	~~X~~	~~X~~	O					

1. In place of ②, specify the Lens/LED Color Code, in place of ③, specify the Full Voltage (lamp voltage) Code, in place of ④, specify the Transformer Voltage Code and in place of ⑤ specify the Lamp Type Code.

2. The truth table indicates the operating position of contact block when the operator is switched to that position.
X = On (Closed Contacts) O = Off (Open Contacts)
~~X X~~ = Overlapping Contacts: Remain on (closed contacts) when switch is moved between these positions

Series 16M – General Purpose Control
Series 16HM – High Sensitivity Version

- Compact Size
- Modular Plug-In Design
- LED Monitoring
- Surge Protection
- Various Time Delays
- Low Voltage Sensor
- Solid State Reliability
- Up to 5.5 Million Ohms/cm Sensitivity
- 8-Pin Plugs
- CSA Approved
- U.L. "Motor Control"

Engineered for general purpose single-level or differential service, Series 16M controls combine the reliability of solid state electronics and the convenience of plug-in design. Series 16HM provides higher sensitivity up to 5.5M ohm/cm (probe voltage is 12 VDC).

Series 16M

Specifications

Contact Design	1 N.O. & 1 N.C. (1 form C)
Contact Rating (120/240 VAC)	10 amp Resistive 1/3 hp
Mode of Operation	Direct/Inverse, factory set
Sensitivity	
Series 16M	0-1M ohm, factory set
Series 16HM	0-5.5M ohm, factory set
Primary Voltage	24 VAC, 120 VAC, 240 VAC (+10%/-15%), 50/60 Hz
Secondary Voltage	
Series 16M	12 VAC, 1.5 mA
Series 16HM	12 VDC
Temperature	-40°F to 150°F
Approvals	U.L. 508 File # E44426, CSA
Terminal Style	Screw connector
Options	Time Delays

How to Order

Use the **Bold** characters from the chart below to construct a product code.

16M X X X X X XX XX

Series
16M **16HM**

Mode of Operation

Direct		Inverse	
A – 4.7K	**F** – 470K	**K** – 4.7K[2]	**R** – 470K[2]
B – 10K	**G** – 1M	**L** – 10K[2]	**S** – 1M[2]
C – 26K	**H** – 3M[1]	**M** – 26K[2]	**T** – 3M[1]
D – 50K	**J** – 5.5M[1]	**N** – 50K[2]	**W** – 5.5M[1]
E – 100K		**P** – 100K[2]	

Supply Voltage
1 – 120 VAC **2** – 240 VAC[3] **3** – 24 VAC

Socket Style
A – 8 Pin Octal **B** – DIN Mount **M** – None, Module Only

Enclosure
0 – None **1** – NEMA 1 **4** – NEMA 4

Optional Character[4]

Time Delay (increasing level)
01-20 – seconds

Time Delay (decreasing level)
01-20 – seconds

– Standard part numbers

Notes:
1. 16HM only.
2. 16M only.
3. Standard on 16M only.
4. See page E-29 for descriptions.

Applications

- Single Level Service
- Differential Service
- Point Level
- Alarms
- Valve Control
- Pump Control

Dimensions

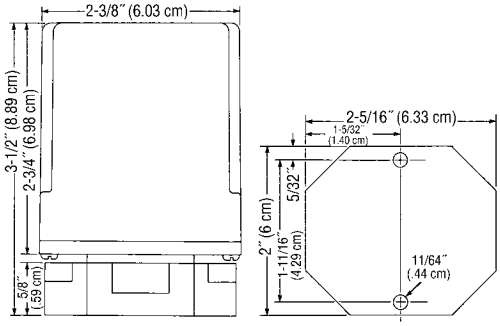

Wiring

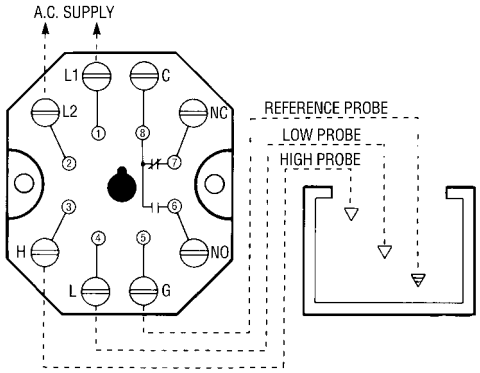

Note: For single level service, use "H" and "G" connections.

CONDUCTIVITY

Form 167
Sheet P/N 100212-1
Rev. E

Warrick® Series 16M Controls

Installation and Operation Bulletin

This bulletin should be used by experienced personnel as a guide to the installation of series 16M controls. Selection or installation of equipment should always be accompanied by competent technical assistance. We encourage you to contact Gems Sensors or its representative if further information is required.

Specifications

Control Design: Solid state components enclosed in clear Lexan plug-in style housing. Housing carries no NEMA rating.
Contact Design: SPDT (1 form C): one normally open (N.O.) and one normally closed (N.C.), non-powered contacts.
Contact Ratings: 10A @ 120 or 240 VAC resistive, 1/3 H.P. @120 or 240 VAC.
Contact Life: Mechanical- 5 million operations. Electrical- 100,000 operations minimum at rated load.
Supply Voltage: 24, 120, or 240 VAC models- factory set. Plus 10%, minus 15%, 50/60 Hz.
Supply Current: 120, 240, 24 VAC, Relay energized 4.4 VA.
Secondary Circuit: 12 VAC RMS voltage on probes, 1.5 milli-amp current.
Sensitivity: Models operate from 0-1,000,000 OHM maximum specific resistance- factory set.
Temperature: -40 to 150° F. ambient.
Terminals: All connections #6-32 screw type with pressure clamps.
Time Delays: Standard, 0.5 seconds on rising level. Additional time delays on rising and/or falling available as option.
Listings: U.L. listed, Industrial Motor Control (508).

Installation

1. Install octal socket in appropriate enclosure using two (2) #6 or #8 metal screws.

1A. Install rail mount socket on appropriate rail (DIN mount) in appropriate enclosure if applicable.

2. Wire control per wiring diagram, following N.E.C. and local codes
3. Install control module in socket.

Sensitivities vs Maximum Probe Wire Distance*

Sensitivity Character	Sensitivity (K Ohms)	Distance (Ft)
A or K	4.7	10,000
B or L	10	5,700
C or M	26	2,200
D or N	50	1,075
E or P	100	570
F or R	470	270
G or S	1,000	38

* Based on type MTW or THHN wire, #14 or #16 Awg.

Dimensional Diagram

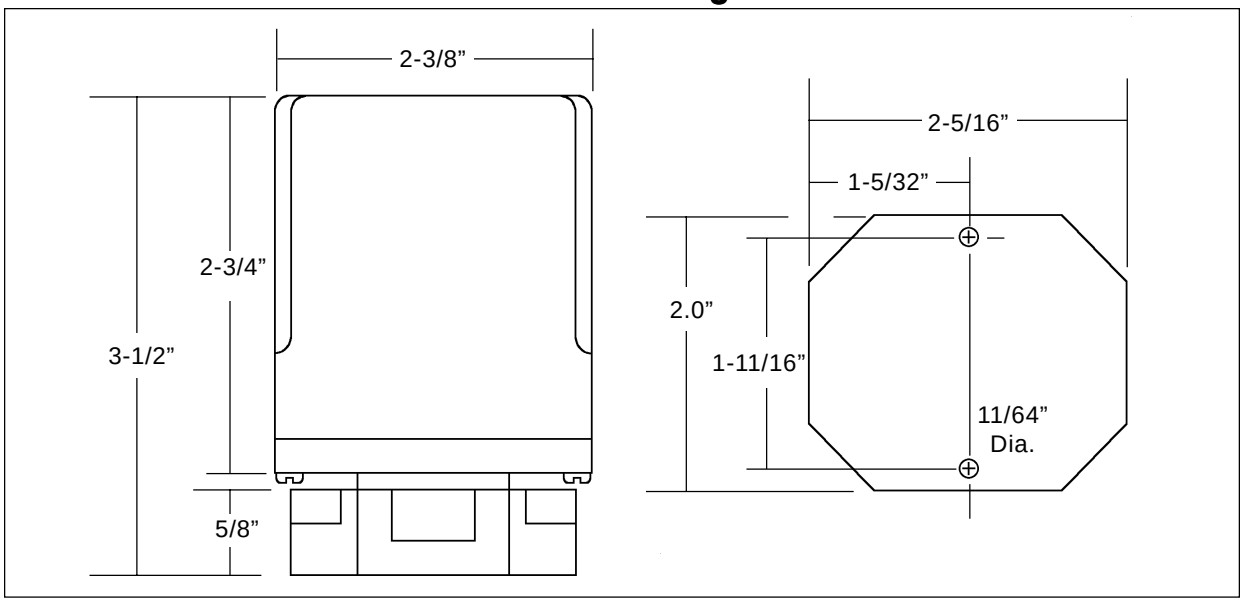

Use copper (60/70° C) wire only. Torque to 20 inch pounds.

Operation

Direct Mode- Single Level Service: When the liquid rises to the electrode on terminal 3, the control energizes, changing state of the load contacts. (LED will be lit) The control remains energized until the liquid level recedes below electrode on terminal 3. The control then de-energizes, (LED will not be lit) returning load to original state.

Inverse Mode- Single Level Service: Control energizes with power, changing state of the load contacts. (LED will be lit) When the liquid rises to the electrode on terminal 3, the control de-energizes, returning the load contacts to shelf state. (LED will not be lit) The control remains de-energized until liquid level recedes below the electrode connected to terminal 3. The control then energizes.

Direct Mode- Differential Service: When the liquid rises to the electrode on terminal 3, the control energizes, changing state of the load contacts. (LED will be lit) The control remains energized until the liquid level recedes below electrode on terminal 4. The control then de-energizes, (LED will not be lit) returning the load contacts to original state.

Inverse Mode- Differential Service: Control energizes with power, (LED will be lit) changing state of the load contacts. When the liquid rises to the electrode on terminal 3, the control de-energizes, returning load contacts to shelf state. (LED will not be lit) The control remains de-energized until the liquid level recedes below the electrode on terminal 4. The control then energizes.

Wiring Diagram

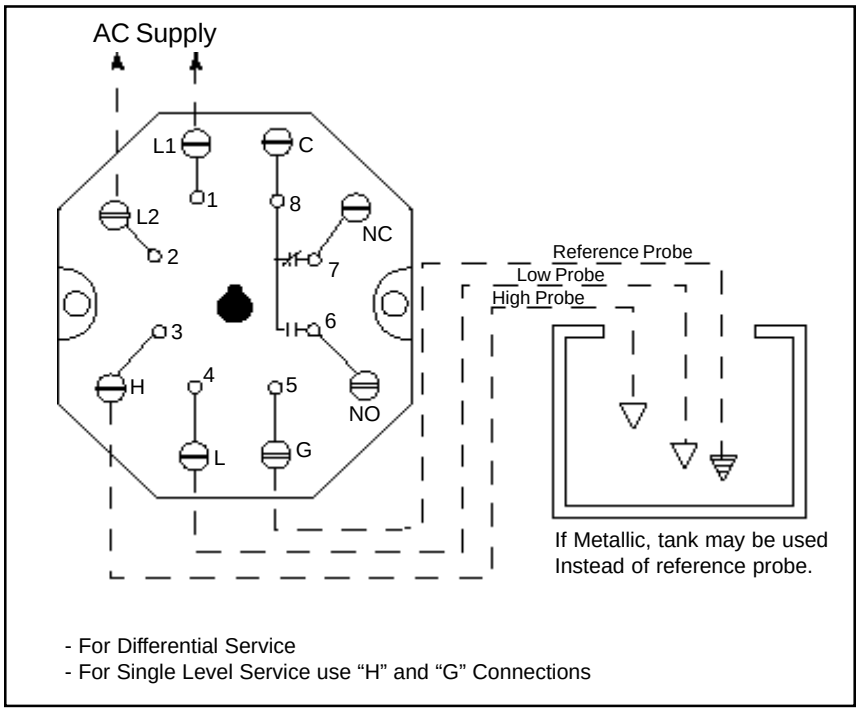

Optional

Time Delays: With time delay on increasing level, the liquid must be in contact with the short electrode for the full duration of the time delay before control will operate. With delay on decreasing level, the liquid must be below long electrode for the full duration of the time delay before control will operate. In single level service, terminals 3 and 4 must be jumpered together to achieve time delays on both increasing and decreasing levels or just decreasing level.

16M- X-X-X-X-XX-XX

- **Time Delay:** (decreasing level) 1-20 sec.
- **Time Delay:** (increasing level) 1-20 sec.
- **Enclosure:** 0-none, 1-NEMA 1, 4-NEMA 4, 7-NEMA 7, 12-NEMA 12
- **Socket Style:** A- 8 Pin Octal, B- 8 Pin DIN mount, M- None, module only
- **Supply Voltage:** 1- 120 VAC, 2- 240 VAC, 3- 24 VAC, 8- 208/240 VAC*
- **Mode/Sensitivity:**
  - **Direct** A- 4.7K, B- 10K, C- 26K, D- 50K, E- 100K, F- 470K, G- 1M
  - **Inverse** K- 4.7K, L- 10K, M- 26K, N- 50K, P- 100K, R- 470K, S- 1M

*187 Vmin to 255 Vmax VAC

Gems Sensors Inc.
One Cowles Road
Plainville, CT 06062-1198
Tel: 860-793-4579
Fax: 860-793-4580

Eaton 9130 Tower UPS

Product snapshot

Product rating:	700–3000 VA
Voltage	120 Vac, 208–240V
Frequency:	50/60 Hz (auto-sensing)
Configuration:	Tower

Advanced power protection for:

- IT and networking environments
- Servers, networking gear
- Telecommunications, VoIP, security systems
- Medical systems
- Diagnostics and medical screening
- Patient record archives
- Manufacturing systems
- Chip fabrication
- Pharmaceutical production
- Chemical processing

Features

- Protects against downtime, data loss and process interruption by providing continuous, clean power
- Expands monitoring, management and continuous uptime capabilities with the Intelligent Power® Software Suite—perfect for virtualized environments
- Offers premium performance with a 0.9 power factor and >95 percent efficiency in high efficiency mode
- Increases battery service life and system uptime with ABM® battery charging technology
- Enables prolonged runtime of essential equipment during power outages by allowing for orderly, remote shutdown of non-critical systems or processes
- Conserves valuable space with a slim tower design
- Provides a two-year limited warranty, an extended warranty and a $250,000 load protection guarantee (U.S. and Canada)

Maximum availability

- ABM technology increases battery life and system uptime
- Load segments allow for selective load shedding during outages
- Optional hot-swappable extended battery modules (EBMs) extend backup runtime for hours
- Internal hot-swappable batteries can be replaced without powering down the UPS
- UPS startup on battery power
- Optional HotSwap Maintenance Bypass (MBP) enables the entire UPS to be serviced or replaced without interrupting power to loads

Low total cost of ownership

- More real output power for dollar spent with 0.9 power factor
- Cuts energy usage and costs with >95% efficiency rating in high efficiency mode

Powering Business Worldwide

Bright LCD user interface

Add up to four EBMs for hours of runtime

UPS status and operation

- Free Intelligent Power Software Suite for expanded monitoring, management and shutdown capabilities (compatible with VMware vCenter Server™ and Microsoft SCVMM™)
- Bright, front panel LCD for easy monitoring and management
- LEDs to show system status
- Direct monitoring via existing management systems and LANs
- Optional FlexPDU adds more plug-and-play flexibility, streamlining power distribution

Communications

- A standard communication slot accepts cards for Web, SNMP, Modbus or serial connectivity
- Connect directly to the Ethernet network and the Internet to monitor and manage the UPS with a standard Web browser
- Monitor power conditions in real time through existing facilities or building management system
- Monitor and gracefully shut down multiple servers and virtual machines running various operating systems
- Receive alarm notifications from the UPS, environmental monitoring devices, security systems or through your vCenter dashboard

For more information on the 9130, please visit **www.eaton.com/9130** or call **800.356.5794**.

Optional FlexPDU and HotSwap MBP for greater flexibility and uptime

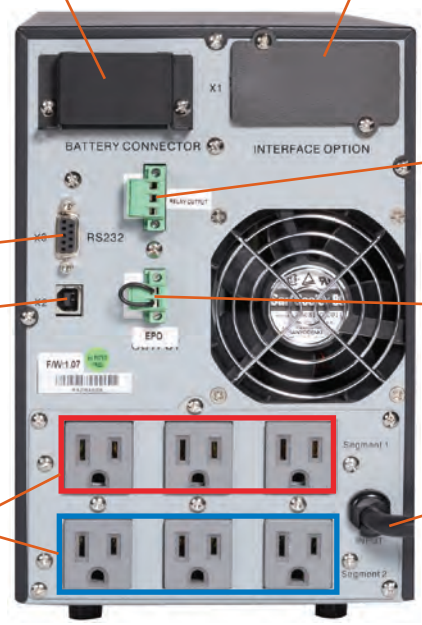

UPS rear panel (PW9130L1500T-XL)

Battery runtimes (in minutes)

Load (VA/Watts)	Internal batteries	w/1 EBM	w/2 EBMs	w/3 EBMs	w/4 EBMs
PW9130L700T					
700/490	8	N/A	N/A	N/A	N/A
525/368	12	N/A	N/A	N/A	N/A
350/245	21	N/A	N/A	N/A	N/A
175/123	37	N/A	N/A	N/A	N/A
PW9130i700T					
700/490	8	N/A	N/A	N/A	N/A
525/368	12	N/A	N/A	N/A	N/A
350/245	19	N/A	N/A	N/A	N/A
175/123	35	N/A	N/A	N/A	N/A
PW9130L1000T-XL					
1000/700	10	40	73	108	149
750/525	13	58	101	152	219
500/350	24	85	172	249	304
250/175	48	190	310	451	569
PW9130G1000T-XL / PW9130i1000T-XL					
1000/700	10	40	78	110	150
750/525	13	55	103	151	223
500/350	22	82	186	250	312
250/175	47	190	328	431	584
PW9130L1500T-XL					
1500/1050	7	34	63	88	135
1125/788	11	44	84	129	210
750/525	18	79	148	207	267
375/263	38	167	278	475	540

Load (VA/Watts)	Internal batteries	w/1 EBM	w/2 EBMs	w/3 EBMs	w/4 EBMs
PW9130i1500T-XL					
1500/1050	7	32	61	98	128
1125/788	11	47	83	126	195
750/525	18	81	143	208	262
375/263	38	171	298	416	564
PW9130L2000T-XL					
2000/1400	15	61	111	156	194
1500/1050	21	81	145	184	269
1000/700	34	129	198	293	410
500/350	72	225	449	590	766
PW9130G2000T-XL / XLEU / PW9130i2000T-XL					
2000/1400	15	61	111	156	186
1500/1050	21	81	145	184	248
1000/700	34	129	198	293	431
500/350	72	225	449	590	840
PW9130L3000T-XL					
3000/2100	9	35	66	95	132
2250/1575	13	53	100	139	183
1500/1050	22	86	153	221	267
750/525	69	168	298	395	545
PW9130G3000T-XL / XLEU / PW9130i3000T-XL					
3000/2100	9	36	68	101	137
2250/1575	12	49	90	134	165
1500/1050	20	79	143	180	240
750/525	46	161	267	434	547

Notes:

Backup times are approximate and may vary with equipment, configuration, battery age, temperature, etc.
Runtimes are shown at a 0.7 power factor.

9130 models

Catalog number	Style number	Rating (VA/Watts)	Input connection[1]	Output receptacles	Dimensions H x W x D, in (mm)	Weight, lb (kg)
North American models: 120V, 50/60 Hz						
PW9130L700T	103006426-6591	700/630	5-15P	(6) 5-15R	9.1 x 6.3 x 13.8 (230 x 160 x 350)	26.9 (12.2)
PW9130L1000T-XL	103006427-6591	1000/900	5-15P	(6) 5-15R	9.1 x 6.3 x 15.0 (230 x 160 x 380)	32.0 (14.5)
PW9130L1500T-XL	103006428-6591	1500/1350	5-15P	(6) 5-15R	9.1 x 6.3 x 16.9 (230 x 160 x 430)	41.9 (19.0)
PW9130L2000T-XL	103006429-6591	2000/1800	5-20P	(1) L5-20R, (4) 5-20R	12.8 x 8.4 x 16.1 (325 x 214 x 410)	76.1 (34.5)
PW9130L3000T-XL	103006430-6591	3000/2700	L5-30P	(4) 5-20R, (1) L5-30R	12.8 x 8.4 x 16.1 (325 x 214 x 410)	76.1 (34.5)
Global models: 208V, 50/60 Hz						
PW9130G1000T-XL	103006431-6591	1000/900	L6-20P[3]	(1) L6-20R, (2) 6-20R	9.1 x 6.3 x 15.0 (230 x 160 x 380)	32.0 (14.5)
PW9130G2000T-XL	103006432-6591	2000/1800	L6-20P[3]	(1) L6-20R, (4) 6-20R	12.8 x 8.4 x 16.1 (325 x 214 x 410)	76.1 (34.5)
PW9130G2000T-XLEU	103006478-6591	2000/1800	L6-20P[3]	(8) C13, (1) C19	12.8 x 8.4 x 16.1 (325 x 214 x 410)	76.1 (34.5)
PW9130G3000T-XL	103006446-6591	3000/2700	L6-20P[3]	(1) L6-30R, (1) L6-20R, (2) 6-20R	12.8 x 8.4 x 16.1 (325 x 214 x 410)	76.1 (34.5)
PW9130G3000T-XLEU	103006479-6591	3000/2700	L6-20P[3]	(8) C13, (1) C19	12.8 x 8.4 x 16.1 (325 x 214 x 410)	76.1 (34.5)
International models: 230V, 50/60 Hz						
PW9130i700T	103006433-6591	700/630	C14	(6) C13	9.1 x 6.3 x 13.8 (230 x 160 x 350)	26.9 (12.2)
PW9130i1000T-XL	103006434-6591	1000/900	C14	(6) C13	9.1 x 6.3 x 15.0 (230 x 160 x 380)	32.0 (14.5)
PW9130i1500T-XL	103006435-6591	1500/1350	C14	(6) C13	9.1 x 6.3 x 16.9 (230 x 160 x 430)	41.9 (19.0)
PW9130i2000T-XL	103006436-6591	2000/1800	C14	(8) C13, (1) C19	12.8 x 8.4 x 16.1 (325 x 214 x 410)	76.1 (34.5)
PW9130i3000T-XL	103006437-6591	3000/2700	C20	(8) C13, (1) C19	12.8 x 8.4 x 16.1 (325 x 214 x 410)	76.1 (34.5)
Extended battery modules						
PW9130N1000T-EBM[4]	103006438-6591	NA	NA	NA	9.1 x 6.3 x 15.0 (230 x 160 x 380)	40.8 (18.5)
PW9130N1500T-EBM[5]	103006439-6591	NA	NA	NA	9.1 x 6.3 x 16.9 (230 x 160 x 430)	53.6 (24.3)
PW9130N3000T-EBM[6] (50.0)	103006440-6591	NA	NA	NA	12.8 x 8.4 x 16.1 (325 x 214 x 410)	110.3

[1] Input cord length is 6 ft
[2] C14, w/detachable L6-20P
[3] C20, w/detachable L6-20P
[4] This EBM works with 1000 VA model, where available
[5] This EBM works with 1500 VA model
[6] This EBM works with 2000/3000 VA models, where available

Additional notes:

When high voltage 9130 is used at 208V, derate power by 10% and 20% at 200V
When low voltage 9130 is used at 110V, derate power by 10% and 20% at 100V

Comprehensive Eaton services available for 9130 Tower products

- Warranty+ extended warranties—3 or 5 years total
- On-site service plans for startups and preventive and corrective maintenance

Visit **www.eaton.com/9130** for details.

Technical specifications[1]

General	
User interface	Graphical LCD with blue backlight and text in English, French, German, Russian and Spanish
LEDs	Four status-indicating LEDs
Topology	True online, double-conversion
Diagnostics	Full system self-test
UPS bypass	Automatic bypass
Dimensions	See models table
Remote Emergency Power-off (REPO)	Emergency shutdown control through the REPO port

Electrical input	
Nominal voltage	120V, 208V, 220–240V
Voltage range	120V: 90–138 Vac 208/230V: 160–276 Vac
Power draw of UPS	700: 5.8A @120V, 3.4A @208V, 3.0A @230V 1000: 8.3A @120V, 4.8A @208V, 4.3A @230V 1500: 12.5A @120V, 7.2A @208V, 6.5A @230V 2000: 16.6A @120V, 9.6A @208V, 8.7A @230V 3000: 14.4A @208V, 13.0A @230V
Dedicated circuit breaker rating	**120V:** 700–1500 VA: 15A 2000 VA: 20A 3000 VA: 30A **208/230V:** 700–2000 VA: 10A 3000 VA: 16A
Frequency	50/60 Hz
Frequency range	45–65 Hz

Electrical output	
Power factor	0.9
On utility voltage regulation	±3% of nominal
On battery voltage regulation	±3% of nominal
Efficiency	>95% in high-efficiency mode; >86% in online mode
Frequency regulation	±3% Hz online
Load crest factor	3 to 1
Voltage waveform	Sine wave
Load segments	Two configurable, individually controlled receptacles

Battery	
Battery type	VRLA 12V/9 Ah (both internal and external)
Battery runtime	>3 minutes with internal batteries @100% load
Battery replacement	Hot-swappable internal and external batteries
Start-on-battery	Allows start of UPS without utility input

Communications	
Serial port	RS-232 standard, for interface to power management software
USB port	HID standard, for communicating with Windows 98, XP, ME and Vista computers
Relay output	Common alarm standard
Communications slot	Optional communication slot (Mini-Slot)
Optional communication cards	SNMP/Web card for direct control and monitoring in SNMP-based networks, monitoring of UPS status and meters through Web browser interface Relay card for integration to industrial environment and building management systems, remote shutdown for IBM AS/400 systems

Environmental	
Safety markings	120/208V: UL, CUL, VCCI 230V: CE, GS
EMC markings	120V: FCC Class B, EN55022 Class B (1.5 kVA and below); FCC Class A, EN55022 Class A (2.0 kVA and above) 230V: CE (per IEC/EN62040-2: Emissions, Category C1; Immunity, Category C2)
Audible noise	<50 dB
Ambient operating temperature	0˚C (32˚F) to +40˚C (104˚F)
Storage temperature	-20˚C (-4˚F) to +40˚C (104˚F) with batteries and -25˚C (-13˚F) to +55˚C (131˚F) without batteries
Relative humidity	5–90% non-condensing

Heat dissipation for all voltages: 208–240V and 120V

9130 model	Normal mode, BTUs/hr	On battery, BTUs/hr
700 VA	350	554
1000 VA	500	674
1500 VA	750	1,011
2000 VA	838	1,348
3000 VA	1,257	1,755

[1] Due to continuing product improvement programs, specifications are subject to change without notice.

The 9130 is part of the UPSgrade program

UPSgrade™

www.eaton.com/UPSgrade

UNITED STATES
8609 Six Forks Road
Raleigh, NC 27615 U.S.A.
Toll Free: 1.800.356.5794

www.eaton.com/powerquality

CANADA
Ontario: 416.798.0112
Toll free: 1.800.461.9166

LATIN AMERICA
South Cone: 54.11.4124.4000
Brazil: 55.11.3616.8500
Andean & Caribbean: 1.949.452.9610
Mexico & Central America: 52.55.9000.5252

EUROPE/MIDDLE EAST/AFRICA
Denmark: 45.3686.7910
Finland: 358.94.52.661
France: 33.1.6012.7400
Germany: 49.0.7841.604.0
Italy: 39.02.66.04.05.40
Norway: 47.23.03.65.50
Portugal: 55.11.3616.8500
Sweden: 46.8.598.940.00
United Kingdom: 44.1753.608.700

ASIA PACIFIC
Australia: 61.2.9693.9366
New Zealand: 64.0.3.343.3314
China: 86.21.6361.5599
HK/Korea/Taiwan: 852.2745.6682
India: 91.11.4223.2300
Singapore/SEA: 65.6825.1668

EATON
Powering Business Worldwide

Eaton, Powerware, ABM, Intelligent Power and UPSgrade are trade names, trademarks and/or service marks of Eaton Corporation or its subsidiaries and affiliates. All other trademarks are property of their respective owners.

©2011 Eaton Corporation
All Rights Reserved

Printed in USA
9130TFXA / TN
June 2011

Eaton® 9130 UPS

700/3000 VA
User's Guide

Powering Business Worldwide

Eaton® 9130 UPS

700/3000 VA
User's Guide

Powering Business Worldwide

Requesting a Declaration of Conformity

Units that are labeled with a CE mark comply with the following harmonized standards and EU directives:

- Harmonized Standards: EN 62040-1-1 and EN 62040-2; IEC 60950-1
- EU Directives:

  73/23/EEC, Council Directive on equipment designed for use within certain voltage limits

  93/68/EEC, Amending Directive 73/23/EEC

  2004/108/EEC, Council Directive relating to electromagnetic compatibility

The EC Declaration of Conformity is available upon request for products with a CE mark. For copies of the EC Declaration of Conformity, contact:

Eaton Power Quality Oy
Koskelontie 13
FIN-02920 Espoo
Finland
Phone: +358-9-452 661
Fax: +358-9-452 665 68

Eaton, FERRUPS, and Intelligent Power Protector are registered trademarks of Eaton or its subsidiaries and affiliates. National Electrical Code and NEC are registered trademarks of National Fire Protection Association, Inc. Phillips is a registered trademark of Phillips Screw Company. All other trademarks are property of their respective companies.

Copyright 2011—2015 Eaton, Raleigh, NC, USA. All rights reserved. No part of this document may be reproduced in any way without the express written approval of Eaton.

Class A EMC Statements

FCC Part 15

This equipment has been tested and found to comply with the limits for a Class A digital device, pursuant to part 15 of the FCC Rules. These limits are designed to provide reasonable protection against harmful interference when the equipment is operated in a commercial environment. This equipment generates, uses, and can radiate radio frequency energy and, if not installed and used in accordance with the instruction manual, may cause harmful interference to radio communications. Operation of this equipment in a residential area is likely to cause harmful interference in which case the user will be required to correct the interference at his own expense

EN 62040-2

Some configurations are classified under EN 62040-2 as "Category C2 UPS." For these configurations, the following applies:

WARNING

This is a category C2 UPS product. In a residential environment, this product may cause radio interference, in which case the user may be required to take additional measures.

Special Symbols

The following are examples of symbols used on the UPS or accessories to alert you to important information:

RISK OF ELECTRIC SHOCK - Observe the warning associated with the risk of electric shock symbol.

CAUTION: REFER TO OPERATOR'S MANUAL - Refer to your operator's manual for additional information, such as important operating and maintenance instructions.

This symbol indicates that you should not discard the UPS or the UPS batteries in the trash. This product contains sealed, lead-acid batteries and must be disposed of properly. For more information, contact your local recycling/reuse or hazardous waste center.

This symbol indicates that you should not discard waste electrical or electronic equipment (WEEE) in the trash. For proper disposal, contact your local recycling/reuse or hazardous waste center.

Table of Contents

1 INTRODUCTION 1

2 SAFETY WARNINGS 3

3 INSTALLATION 13

Inspecting the Equipment 13
Unpacking the Cabinet 13
Checking the Accessory Kit 14
Rackmount Installation 14
Checking the Rail Kit Accessories 14
Tools Required 15
Rackmount Setup 15
Rackmount Wiring Installation 18
Installing the UPS 18
Connecting the EBM(s) 20
Tower Installation 22
Tower Wiring Installation 22
Installing the UPS 22
Connecting the EBM(s) 24
UPS Initial Startup 26

4 OPERATION 29

Control Panel Functions 29
Changing the Language 30
Display Functions 30
User Settings 31
Operating Modes 34
Normal Mode 34
Battery Mode 34
Bypass Mode 34
Standby Mode 35
UPS Startup and Shutdown 35
Starting the UPS 35
Starting the UPS on Battery 35
UPS Shutdown 36
Transferring the UPS Between Modes 36
Retrieving the Event Log 36
Logic Power Off 36
Setting Power Strategy 37
Configuring Bypass Settings 37
Configuring Load Segments 38
Configuring Battery Settings 38
Configuring the UPS for EBMs 38
Running Automatic Battery Tests 39
Configuring Automatic Restart 39

5 COMMUNICATION 41
Installing Communication Options and Control Terminals. 41
Communication Options 42
RS-232 and USB Communication Ports 42
Connectivity Cards 43
Remote Emergency Power-off 43
Forced to Bypass State 44
Relay Output Contacts 45
Programmable Signal Inputs 46
Power Management and Protection Software 46

6 MAINTENANCE 47
UPS and Battery Care 47
Storing the UPS and Batteries 47
When to Replace Batteries 47
Replacing Batteries 47
Replacing Rackmount UPS Internal Batteries 48
Replacing Tower UPS Internal Batteries 50
Replacing Rackmount EBMs 53
Replacing Tower EBMs 54
Testing New Batteries 55
Recycling the Used Battery or UPS 55
Updating the UPS Firmware 55

7 SPECIFICATIONS 57
Rear Panels 73

8 TROUBLESHOOTING 89
Typical Alarms and Conditions 89
Alarm or Condition 89
Silencing the Alarm 91
Service and Support 92

9 WARRANTY 93

Chapter 1 Introduction

The Eaton® 9130 uninterruptible power system (UPS), protects your sensitive electronic equipment from the most common power problems, including power failures, power sags, power surges, brownouts, line noise, high voltage spikes, frequency variations, switching transients, and harmonic distortion.

Power outages can occur when you least expect it and power quality can be erratic. These power problems have the potential to corrupt critical data, destroy unsaved work sessions, and damage hardware – causing hours of lost productivity and expensive repairs.

With the Eaton 9130, you can safely eliminate the effects of power disturbances and guard the integrity of your equipment. Providing outstanding performance and reliability, the Eaton 9130's unique benefits include:

- True online double-conversion technology with high power density, utility frequency independence, and generator compatibility.
- Advanced Battery Management (ABM®)technology that uses advanced battery management to increase service life, optimize recharge time, and provide a warning before the end of useful battery life.
- Selectable High Efficiency mode of operation.
- Rackmount models in a space-optimizing 2U size that fits any standard 19" rack.
- Standard communication options: one RS-232 communication port, one USB communication port, and relay output contacts.
- Optional connectivity cards with enhanced communication capabilities.
- Extended runtime with up to four Extended Battery Modules (EBMs) per UPS.
- Firmware that is easily upgradable without a service call.
- Emergency shutdown control through the Remote Emergency Power-off (REPO) port.
- Backed by worldwide agency approvals.

Figure 1 shows the Eaton 9130 rackmount UPS, and Figure 2 shows the optional rackmount EBM.

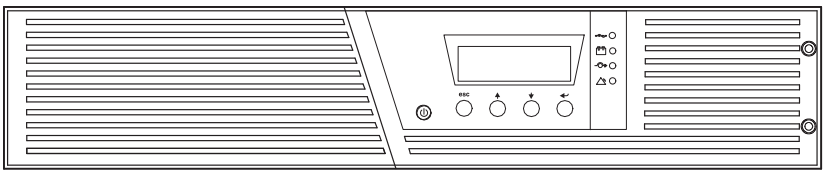

Figure 1. The Eaton 9130 Rackmount UPS

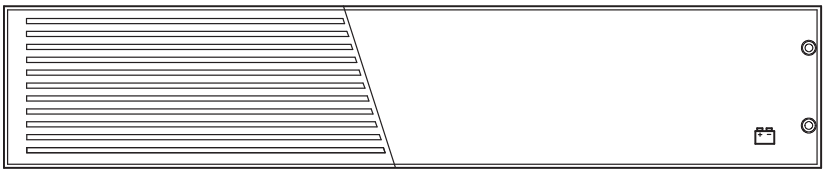

Figure 2. The Eaton 9130 Rackmount EBM

Figure 3 shows the Eaton 9130 tower UPS and optional EBM.

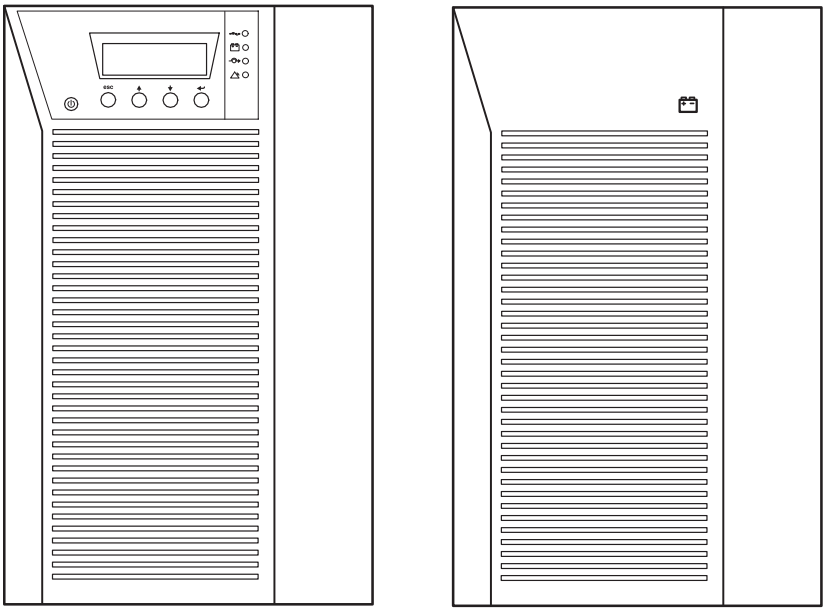

Figure 3. The Eaton 9130 Tower UPS and EBM (2000/3000 VA Models Shown)

Chapter 2 Safety Warnings

IMPORTANT SAFETY INSTRUCTIONS — SAVE THESE INSTRUCTIONS

This manual contains important instructions that you should follow during installation and maintenance of the UPS and batteries. Please read all instructions before operating the equipment and save this manual for future reference.

DANGER

This UPS contains LETHAL VOLTAGES. All repairs and service should be performed by AUTHORIZED SERVICE PERSONNEL ONLY. There are NO USER SERVICEABLE PARTS inside the UPS.

WARNING

- This UPS contains its own energy source (batteries). The UPS output may carry live voltage even when the UPS is not connected to an AC supply.
- To reduce the risk of fire or electric shock, install this UPS in a temperature and humidity controlled, indoor environment, free of conductive contaminants. Ambient temperature must not exceed 40°C (104°F). Do not operate near water or excessive humidity (90% maximum).
- To reduce the risk of fire, connect only to a circuit provided with branch circuit overcurrent protection in accordance with the National Electrical Code® (NEC®), ANSI/NFPA 70.
- Output overcurrent protection and disconnect switch must be provided by others.
- To comply with international standards and wiring regulations, the sum of the leakage current of the UPS and the total equipment connected to the output of this UPS must not have an earth leakage current greater than 3.5 milliamperes.
- If installing an optional rackmount Extended Battery Module (EBM), install the EBM(s) directly below the UPS so that all wiring between the cabinets is installed behind the front covers and is inaccessible to users. The maximum number of EBM(s) per UPS is four.
- If the UPS requires any type of transportation, verify that the UPS is unplugged and turned off and then disconnect the UPS internal battery connector (see Figure 24 on page 49 for rackmount models or Figure 26 on page 51 for tower models).

CAUTION

- Batteries can present a risk of electrical shock or burn from high short-circuit current. Observe proper precautions. Servicing should be performed by qualified service personnel knowledgeable of batteries and required precautions. Keep unauthorized personnel away from batteries.
- Proper disposal of batteries is required. Refer to your local codes for disposal requirements.
- Never dispose of batteries in a fire. Batteries may explode when exposed to flame.

Tarkeita Turvaohjeita

TÄRKEITÄ TURVAOHJEITA - SUOMI — SÄILYTÄ NÄMÄ OHJEET

Tämä käyttöohje sisältää tärkeitä ohjeita, joita on noudatettava UPS-virtalähteen ja akkujen asennuksen ja huollon yhteydessä. Lue kaikki ohjeet ennen laitteiston käyttöä ja säilytä ohje myöhempää tarvetta varten.

VAARA

Tämä UPS sisältää HENGENVAARALLISIA JÄNNITTEITÄ. Kaikki korjaukset ja huollot on jätettävä VAIN VALTUUTETUN HUOLTOHENKILÖN TOIMEKSI. UPS ei sisällä MITÄÄN KÄYTTÄJÄN HUOLLETTAVIA OSIA.

VAROITUS

- Tässä UPS-virtalähteessä on oma energianlähde (akut). UPS-virtalähteen lähdössä voi olla jännite, vaikka UPS-virtalähdettä ei ole kytketty verkkovirtaan.
- Vähentääksesi tulipalon ja sähköiskun vaaraa asenna tämä UPS sisätiloihin, joissa lämpötila ja kosteus on säädettävissä ja joissa ei ole virtaa johtavia epäpuhtauksia. Ympäristön lämpötila ei saa ylittää 40 °C. Älä käytä lähellä vettä ja vältä kosteita tiloja (95 % maksimi).
- Pienennä tulipalon vaaraa kytkemällä vain piiriin, jossa on 100 ampeerin maksimihaarapiirin ylivirtasuoja kansallisen sähkölainsäädännön (ANSI/NFPA 70) mukaan.
- Muiden on toimitettava lähdön ylivirtasuoja ja irtikytkentäkytkin.
- Kansainväliset normit ja johdotusmääräykset vaativat, että kaikkien tämän UPS-laitteen ulostulokytkentöjen yhteinen maavuotovirta ei ylitä 3,5 milliampeeria (mA).
- Jos asennat valinnaisia räkkiasenteisia EBM, asenna EBM suoraan UPS:n alapuolelle niin, että laitteiden väliset johdotukset on asennettu kotelon etuosan taakse, jotta käyttäjä ei pääse niihin käsiksi. Maksimi on EBM yksikköä per UPS.
- Jos UPS:ia on kuljetettava, on varmistettava, että UPS on irrotettu verkosta ja sammutettu ja että sisäiset akut on kytketty irti (katso Kuva 24 ja lue räkkimalleista sivulta 43 ja tornimalleista Kuva 26-sivulta 46,

VARO

- Akut voivat aiheuttaa sähköiskun tai palovammojen vaaran johtuen suuresta oikosulkuvirrasta. Noudata kaikkia asianmukaisia varotoimia. Laitteen saa huoltaa vain ammattitaitoinen huoltohenkilökunta, joka tuntee akut ja niihin liittyvät varotoimet. Älä päästä valtuuttamatonta henkilöstöä lähelle akkuja.
- Akusto täytyy hävittää säädösten mukaisella tavalla. Noudata paikallisia määräyksiä.
- Älä koskaan heitä akkuja tuleen. Ne voivat räjähtää.

Consignes de sécurité

CONSIGNES DE SÉCURITÉ IMPORTANTES — CONSERVER CES INSTRUCTIONS

Ce manuel comporte des instructions importantes que vous êtes invité à suivre lors de toute procédure d'installation et de maintenance des batteries et de l'onduleur. Veuillez consulter entièrement ces instructions avant de faire fonctionner l'équipement et conserver ce manuel afin de pouvoir vous y reporter ultérieurement.

DANGER!

Cet onduleur contient des TENSIONS MORTELLES. Toute opération d'entretien et de réparation doit être EXCLUSIVEMENT CONFIÉE A UN PERSONNEL QUALIFIÉ AGRÉÉ. AUCUNE PIÈCE RÉPARABLE PAR L'UTILISATEUR ne se trouve dans l'onduleur.

AVERTISSEMENT!

- Cette onduleur possède sa propre source d'alimentation (batteries). Il est possible que la sortie de l'onduleur soit sous tension même lorsque l'onduleur n'est pas connectée à une alimentation CA.
- Pour réduire les risques d'incendie et de décharge électrique, installer l'onduleur uniquement à l'intérieur, dans un lieu dépourvu de matériaux conducteurs, où la température et l'humidité ambiantes sont contrôlées. La température ambiante ne doit pas dépasser 40 °C. Ne pas utiliser à proximité d'eau ou dans une atmosphère excessivement humide (95 % maximum).
- Afin de réduire les risques d'incendie, ne raccordez qu'à un circuit muni d'une protection de surintensité du circuit de dérivation maximum de 100 ampères conformément au NEC (Code Électrique National) des États-Unis, ANSI/NFPA 70.
- La protection de surintensité de sortie ainsi que le sectionneur doivent être fournis par des tiers.
- Afin d'être conforme aux normes et règlements internationaux de câblage, le courant de fuite à la terre de la totalité du matériel branché sur la sortie de l'onduleur ne doit pas dépasser 3,5 mA.
- Si vous installez un ou des châssis optionnel EBMs, installez-les EBM directement en dessous de l'onduleur de sorte que tout le câblage entre les modules soit installé derrière les couvercles et soit inaccessible aux utilisateurs. Le nombre maximum de EBM(s) par UPS est de quatre.
- Si l'onduleur doit être transporté, vérifiez qu'il est débranché et arrêté avant de déconnecter le connecteur interne de la batterie (voir Figure 24 à la page 46 pour les modèles pour baie ou Figure 26 à la page 48 pour des modèles type tour).

ATTENTION!

- Les batteries peuvent présenter un risque de choc électrique ou de brûlure provenant d'un courant de court-circuit haute intensité. Observez les précautions appropriées. L'entretien doit être réalisé par du personnel qualifié connaissant bien les batteries et les précautions nécessaires. N'autorisez aucun personnel non qualifié à manipuler les batteries.
- Une mise au rebut réglementaire des batteries est obligatoire. Consulter les règlements en vigueur dans votre localité.
- Ne jamais jeter les batteries au feu. L'exposition aux flammes risque de les faire exploser.

Sicherheitswarnungen

WICHTIGE SICHERHEITSANWEISUNGEN — AUFBEWAREN

Dieses Handbuch enthält wichtige Anweisungen, die Sie während der Installation und Wartung des USV (Unterbrechungsfreies Stromversorgungssystem) und der Batterien befolgen müssen. Bitte lesen Sie alle Anweisungen des Handbuches bevor sie mit dem Gerät arbeiten. Bewaren Sie das Handbuch zum Nachlesen auf.

WARNUNG

Die USV führt lebensgefährliche Spannungen. Alle Reparatur- und Wartungsarbeiten sollten nur von Kundendienstfachleuten durchgeführt werden. Die USV enthält keine vom Benutzer zu wartenden Komponenten.

ACHTUNG

- Dieses USV (Unterbrechungsfreies Stromversorgungssystem) enthält eine eigene Energiequelle (Batterien). Der USV-Ausgang kann Spannung führen, auch wenn das USV nicht an eine Wechselstromquelle angeschlossen ist.
- Um die Brand– oder Elektroschockgefahr zu verringern, diese USV nur in Gebäuden mit kontrollierter Temperatur und Luftfeuchtigkeit installieren, in denen keine leitenden Schmutzstoffen vorhanden sind. Die Umgebungstemperatur darf 40°C nicht übersteigen. Die USV nicht in der Nähe von Wasser oder in extrem hoher Luftfeuchtigkeit (max. 95 %) betreiben.
- Um die Brandgefahr zu verringern, nur an eine Leitung anschließen, die mit einem Überlaststromschutz von maximal 100 Ampere in Übereinstimmung mit dem NEC, ANSI/NFPA 70 ausgestattet ist.
- Der Ausgangs-Überlaststromschutz und der Trennschalter müssen von anderen Herstellern geliefert werden.
- Um internationale Normen und Verdrahtungsvorschriften zu erfüllen, dürfen die an den Ausgang dieser USV angeschlossenen Geräte zusammen einen Erdableitstrom von insgesamt 3,5 Milliampere nicht überschreiten.
- Im Falle der Installation optionaler Rackmount EBMs in einem Rack sollte die Installation direkt unterhalb der USV erfolgen, damit alle Kabel zwischen den Gehäusen hinter den Frontblenden und für Benutzer unzugänglich verlegt werden können. Es können maximal vier EBMs je USV installiert werden.
- Vergewissern Sie sich vor dem Transport der USV, dass die USV von der Stromversorgung getrennt und ausgeschaltet ist. Trennen Sie anschließend den Anschluss der internen USV-Batterie (siehe Abbildung 24 auf Seite 47 für im Rack montierte Modelle oder Abbildung 26 auf Seite 49 für Tower-Modelle).

VORSICHT!

- Batterien können das Risiko eines elektrischen Schlags bergen oder durch hohen Kurzschlussstrom in Brand geraten. Die richtigen Vorsichtsmaßnahmen beachten. Die Wartung muss von qualifiziertem Wartungspersonal durchgeführt werden, das im Umgang mit Batterien geübt ist und über gute Kenntnisse der erforderlichen Vorsichtsmaßnahmen verfügt. Nicht autorisiertes Personal von Batterien fern halten.
- Die Batterien müssen ordnungsgemäß entsorgt werden. Hierbei sind die örtlichen Bestimmungen zu beachten.
- Batterien niemals verbrennen, da sie explodieren können.

Avvisi di sicurezza

IMPORTANTI ISTRUZIONI DI SICUREZZA — CONSERVARE QUESTE ISTRUZIONI

Il presente manuale contiene importanti istruzioni da seguire durante l'installazione e la manutenzione dell'UPS e delle batterie. Leggere integralmente le istruzioni prima di utilizzare l'apparecchiatura e conservare il presente manuale per futuro riferimento.

PERICOLO

La TENSIONE contenuta in questo gruppo statico di continuità è LETALE. Tutte le operazioni di riparazione e di manutenzione devono essere effettuate ESCLUSIVAMENTE DA PERSONALE TECNICO AUTORIZZATO. All'interno del gruppo statico di continuità NON vi sono PARTI RIPARABILI DALL'UTENTE.

AVVERTENZA

- L'UPS contiene la propria fonte di energia (batterie). Le prese d'uscita dell'UPS possono essere sotto tensione anche quando l'UPS non è collegato all'alimentazione elettrica CA.
- Per ridurre il rischio di incendio o di scossa elettrica, installare il gruppo statico di continuità in un ambiente interno a temperatura ed umidità controllata, privo di agenti contaminanti conduttivi. La temperatura ambiente non deve superare i 40°C. Non utilizzare l'unità in prossimità di acqua o in presenza di umidità eccessiva (90% max).
- Per ridurre il rischio di incendio, effettuare il collegamento soltanto a un circuito dotato di una protezione da sovraccarico per il circuito derivato di max. 100 ampere come stabilito dalle norme statunitensi sugli impianti elettrici (NEC, ANSI/NFPA 70).
- La protezione da sovraccarico per le uscite e l'interruttore di scollegamento devono essere forniti da altri produttori.
- Per conformità con gli standard internazionali e con le norme in merito al cablaggio, tutta l'apparecchiatura collegata con l'uscita del gruppo statico di continuità non deve avere una corrente di dispersione di terra superiore a 3,5 milliampere.
- Se si installano uno o più MBS opzionali montati su rack EBM, installarli EBM direttamente sotto l'UPS in modo che tutti i cavi tra gli armadietti siano posizionati dietro le protezioni frontali e siano inaccessibili all'utente. Il numero massimo di EBM MBS per singolo UPS è quattro.
- Se occorre trasportare l'UPS, dopo aver verificato che l'UPS sia spento e scollegato dalla presa di alimentazione, disconnettere il connettore della batteria interna dell'UPS (vedere Figura 24 a pagina 45 per i modelli per rack o Figura 26 a pagina 48 per i modelli tower)

ATTENZIONE

- Le batterie possono comportare un rischio di scossa elettrica o di ustione in seguito a un'elevata corrente di corto circuito. Osservare le dovute precauzioni. L'assistenza deve essere eseguita da personale qualificato esperto di batterie e delle necessarie precauzioni. Tenere il personale non autorizzato lontano dalle batterie.
- Le batterie devono essere smaltite in modo corretto. Per i requisiti di smaltimento fare riferimento alle disposizioni locali.
- Non gettare mai le batterie nel fuoco poichè potrebbero esplodere se esposte alle fiamme.

Предупреждения по мерам безопасности

ВАЖНЫЕ УКАЗАНИЯ ПО МЕРАМ БЕЗОПАСНОСТИ — СОХРАНИТЕ ЭТИ УКАЗАНИЯ

В данном руководстве содержатся важные инструкции по установке и обслуживанию источника бесперебойного питания (ИБП) и батарей. Перед работой с оборудованием прочтите все инструкции. Сохраните данное руководство для дальнейшего использования.

ОПАСНО

В данном ИБП имеются СМЕРТЕЛЬНО ОПАСНЫЕ НАПРЯЖЕНИЯ. Все работы по ремонту и обслуживанию должны выполняться ТОЛЬКО УПОЛНОМОЧЕННЫМ ОБСЛУЖИВАЮЩИМ ПЕРСОНАЛОМ. Внутри ИБП нет узлов, ОБСЛУЖИВАЕМЫХ ПОЛЬЗОВАТЕЛЕМ.

ПРЕДУПРЕЖДЕНИЕ

- В данном ИБП установлены собственные источники энергии (батареи). В ИБП может иметься напряжение даже в том случае, если он не подключен к сети переменного тока.
- Для снижения опасности пожара или поражения электрическим током устанавливайте ИБП в закрытом помещении с контролируемыми температурой и влажностью, в котором отсутствуют проводящие загрязняющие вещества. Температура окружающего воздуха не должна превышать 40°C. Не эксплуатируйте устройство около воды или в местах с повышенной влажностью (макс. 90%).
- Для того чтобы снизить риск возникновения пожара, при подключении используйте электрическую цепь, снабженную защитой от перегрузки параллельной цепи с максимальной силой тока 100 A (в соответствии с Национальными электротехническими правилами и нормами ANSI / NFPA 70).
- Устройство защиты от перегрузки выходного напряжения и размыкающий переключатель приобретаются отдельно.
- Для обеспечения соблюдения требований международных стандартов и требований к разводке электрических цепей, суммарная величина тока утечки на землю всего оборудования, подключенного к выходу ИБП, не должна превышать 3,5 миллиампера.

- При установки дополнительных ЕВМ для монтажа в стойку, необходимо установить ЕВМ непосредственно под ИБП, таким образом, чтобы проводка между корпусами находилась под передними крышками и была недоступна для пользователей. Максимальное количество ЕВМ на ИБП составляет четыре.
- В том случае, если требуется транспортировка ИБП, убедитесь в том, что ИБП отключен от сети и выключен, а затем отсоедините контакт внутренней батареи ИБП (см. Рисунок 24 на стр. 48 для моделей для монтажа в стойку или Рисунок 26 на стр. 50 для моделей типа башня).

ОСТОРОЖНО

- Высокое напряжение, вызванное коротким замыканием в батарее, может привести к поражению электрическим током или ожогу. Соблюдайте меры предосторожности. Техническое обслуживание должно осуществляться квалифицированным персоналом по работе с источниками питания, знакомым с мерами предосторожности. Не допускайте к работе с батареями посторонних.
- Необходимо соблюдать правила утилизации аккумуляторов. Обратитесь к местным нормативным актам за информацией о требованиях к утилизации.
- Никогда не бросайте аккумуляторы в огонь. Аккумуляторы могут взорваться под воздействием огня.

Advertencias de Seguridad

INSTRUCCIONES DE SEGURIDAD IMPORTANTES — GUARDE ESTAS INSTRUCCIONES

Este manual contiene instrucciones importantes que debe seguir durante la instalación y el mantenimiento del SIE y de las baterías. Por favor, lea todas las instrucciones antes de poner en funcionamiento el equipo y guarde este manual para referencia en el futuro.

PELIGRO

Este SIE contiene VOLTAJES MORTALES. Todas las reparaciones y el servicio técnico deben ser efectuados SOLAMENTE POR PERSONAL DE SERVICIO TÉCNICO AUTORIZADO. No hay NINGUNA PARTE QUE EL USUARIO PUEDA REPARAR dentro del SIE.

ADVERTENCIA

- Este SIE contiene su propia fuente de energía (baterías). La salida del SIE puede transportar voltaje activo aun cuando el SIE no esté conectado con una fuente de CA.
- Para reducir el riesgo de incendio o de choque eléctrico, instale este SIE en un lugar cubierto, con temperatura y humedad controladas, libre de contaminantes conductores. La temperatura ambiente no debe exceder los 40°C. No trabaje cerca del agua o con humedad excesiva (90% máximo).
- Para reducir el riesgo de incendio, realice la conexión únicamente hacia un circuito que cuente con un máximo de 100 amperios de protección contra sobrecorriente de circuito derivado, de acuerdo con el Código Eléctrico Nacional, ANSI/NFPA 70.
- La protección contra sobrecorriente de salida y el conmutador de desconexión debe suministrarse por parte de terceros.

- Para cumplir con los estándares internacionales y las normas de instalación, la totalidad de los equipos conectados a la salida de este SIE no debe tener una intensidad de pérdida a tierra superior a los 3,5 miliamperios.
- Si se instalan opcionales de montaje en bastidor EBM(s) instale el EBM(s) directamente debajo la SAI de forma que todo el cableado entre los armarios esté instalado detrás de las cubiertas frontales y los usuarios no puedan acceder al mismo. El número máximo de EBM(s) por SAI es de cuatro.
- Si el SAI requiere cualquier tipo de transporte, verifique que el SAI está desenchufado y apagado y después desconecte el conector de la batería interna del SAI (consulte Figura 24 en la página 45 para los modelos en bastidor o Figura 26 en la página 48 para los modelos en torre).

PRECAUCIÓN

- Las baterías pueden constituir un riesgo de descarga eléctrica o quemaduras por corriente alta de corto circuito. Adopte las precauciones debidas. Personal calificado de servicio que conozca de baterías y esté al tanto de las precauciones requeridas debe darle servicio al equipo. Mantenga al personal no autorizado alejado de las baterías.
- Es necesario desechar las baterías de un modo adecuado. Consulte las normas locales para conocer los requisitos pertinentes.
- Nunca deseche las baterías en el fuego. Las baterías pueden explotar si se las expone a la llama.

Säkerhetsföreskrifter

VIKTIGA SÄKERHETSFÖRESKRIFTER — SPARA DESSA FÖRESKRIFTER

Den här anvisningen innehåller viktiga instruktioner som du ska följa under installation och underhåll av UPS-enheten och batterierna. Läs alla instruktioner innan du använder utrustningen och spara den här anvisningen för framtida referens.

FARA

Denna UPS-enhet innehåller LIVSFARLIG SPÄNNING. ENDAST AUKTORISERAD SERVICEPERSONAL får utföra reparationer eller service. Det finns inga delar som ANVÄNDAREN KAN UTFÖRA SERVICE PÅ inuti UPS-enheten.

VARNING

- Den här UPS-enheten innehåller sin egen energikälla (batterier). UPS-enhetens uttag kan vara spänningsförande även då UPS-enheten inte är ansluten till spänningsnätet.
- Minska risken för brand eller elektriska stötar genom att installera denna UPS-enhet inomhus, där temperatur och luftfuktighet är kontrollerade och där inga ledande föroreningar förekommer. Omgivande temperatur får ej överstiga 40°C. Använd inte utrustningen nära vatten eller vid hög luftfuktighet (max 95 %).
- För att reducera faran för brand får anslutning endast utföras till en krets som skyddas med överbelastningsskydd på maximalt 100 ampere i enlighet med NEC, ANSI/NFPA 70.
- Utgående överbelastningssydd och kretsbrytare måste levereras av annan leverantör.

- För att överensstämma med internationell standard och installationsföreskrifter får inte den totala utrustning som anslutits till uttagen på denna UPS-enhet ha läcksström som överstiger 3,5 milliampere.
- Om valfri(a) för rackinstallationer installeras, skall EBM(:erna) installeras direkt under EBM UPS-enheten så att alla ledningar mellan skåpen installeras bakom de främre skydden och blir oåtkomliga för användarna. Maximalt antal EBM(:er) per UPS är fyra.
- Om UPS-enheten måste förflyttas ska man kontrollera att UPS-enheten är urkopplad och avstängd och därefter skall UPS-enhetens interna batterikontakt kopplas ur (se Bild 24 på sidan 44 för rackinstallerade modeller eller Bild 26 på sidan 47 för tornmodeller).

VITKTIGT

- Batterierna kan innebära en risk för elektrisk stöt eller brännskada från kortsluten starkström. Iakttag lämpliga försiktighetsåtgärder. Service ska utföras av utbildad servicepersonal med kunskap om batterierna och nödvändiga försiktighetsåtgärder. Håll ej behörig personal borta från batterierna.
- Batterierna måste avyttras enligt anvisningarna i lokal lagstiftning.
- Använda batterier får aldrig brännas upp. De kan explodera.

Chapter 3 Installation

This section explains:

- Equipment inspection
- Unpacking the cabinet
- Checking the accessory kit
- Cabinet installation (rackmount and tower)
- Wiring installation
- Initial startup

Inspecting the Equipment

If any equipment has been damaged during shipment, keep the shipping cartons and packing materials for the carrier or place of purchase and file a claim for shipping damage. If you discover damage after acceptance, file a claim for concealed damage.

To file a claim for shipping damage or concealed damage: 1) File with the carrier within 15 days of receipt of the equipment; 2) Send a copy of the damage claim within 15 days to your service representative.

NOTE Check the battery recharge date on the shipping carton label. If the date has passed and the batteries were never recharged, do not use the UPS. Contact your service representative.

Unpacking the Cabinet

CAUTION

- Unpacking the cabinet in a low-temperature environment may cause condensation to occur in and on the cabinet. Do not install the cabinet until the inside and outside of the cabinet are absolutely dry (hazard of electric shock).
- The cabinet is heavy (see page 59 and page 60). Use caution to unpack and move the cabinet.

Use care when moving and opening the carton. Leave the components packaged until ready to install.

To unpack the cabinet and accessories:

1. Open the outer carton and remove the accessories packaged with the cabinet.
2. Carefully lift the cabinet out of the outer carton.
3. Discard or recycle the packaging in a responsible manner, or store it for future use.

Place the cabinet in a protected area that has adequate airflow and is free of humidity, flammable gas, and corrosion.

Checking the Accessory Kit

Verify that the following additional items are included with the UPS:

- UPS user's guide
- Quick start instructions
- USB cable
- Serial cable
- Power cord (for models without an attached power cord)

If you ordered an optional Extended Battery Module (EBM), verify that the following additional item is included with the EBM:

- EBM user's guide

NOTE Discard the EBM user's guide if you are installing the EBM with a new UPS at the same time. Use the UPS user's guide to install both the UPS and the EBM.

Rackmount Installation

The Eaton 9130 rackmount cabinet comes with all of the hardware required for installation in a standard 19-inch rack or JIS seismic rackmount configuration with square and round mounting holes. The rail assemblies adjust to mount in Standard 19-inch racks with front to rear rail distances from 61–76 cm (24–30 inches) deep.

NOTE Rackmount models must only be installed horizontally in the rack. Do not mount the rackmount models in tower mode (vertically).

Checking the Rail Kit Accessories

Verify that the following rail kit items are included for each cabinet:

- Left rail assembly:
  - Left rail
  - Rear rail
  - (3) M4x8 pan-head screws
- Right rail assembly:
  - Right rail
  - Rear rail
  - (3) M4x8 pan-head screws
- Rail hardware kit:
  - (10) M6x16 pan-head screws
  - (10) M6 cage nuts
  - (2) rear stop brackets
  - (2) M3x8 pan-head screws
- Mounting bracket kit:
  - (2) mounting brackets
  - (8) M4x8 flat-head screws

Tools Required

To assemble the components, the following tools may be needed:

- Medium flat-bladed screwdriver
- Phillips® #2 screwdriver
- 7 and 8 mm wrench or socket

Rackmount Setup

CAUTION

- The cabinet is heavy (see page 59). Removing the cabinet from its carton requires a minimum of two people.
- If installing optional EBM(s), install the EBM(s) directly below the UPS so that all wiring between the cabinets is installed behind the front covers and is inaccessible to users.

NOTE Mounting rails are required for each individual cabinet.

To install the rail kit:

1. Assemble the left and right rails to the rear rails as shown in Figure 4. Do not tighten the screws.

   Adjust each rail size for the depth of your rack.

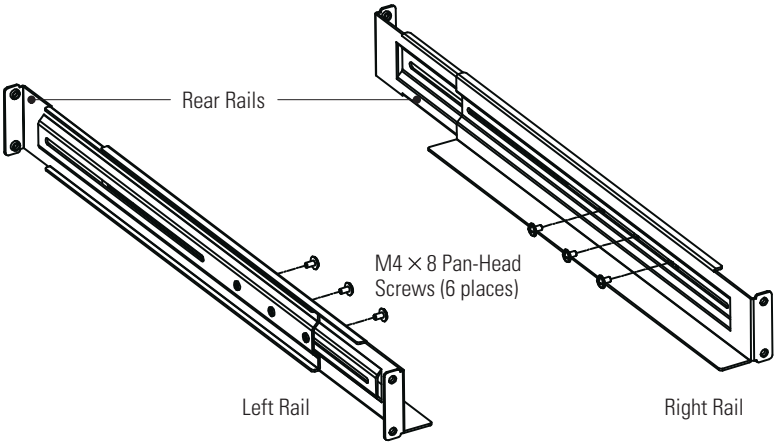

Figure 4. Assembling the Rails

2. Select the proper holes in the rack for positioning the UPS in the rack (see Figure 5). The rails occupy four positions on the front and rear of the rack.
3. Secure one rail assembly to the front of the rack with one M6x16 pan-head screw and one M6 cage nut.
4. Using two M6 cage nuts and two M6x16 pan-head screws, attach the rail assembly to the rear of the rack.

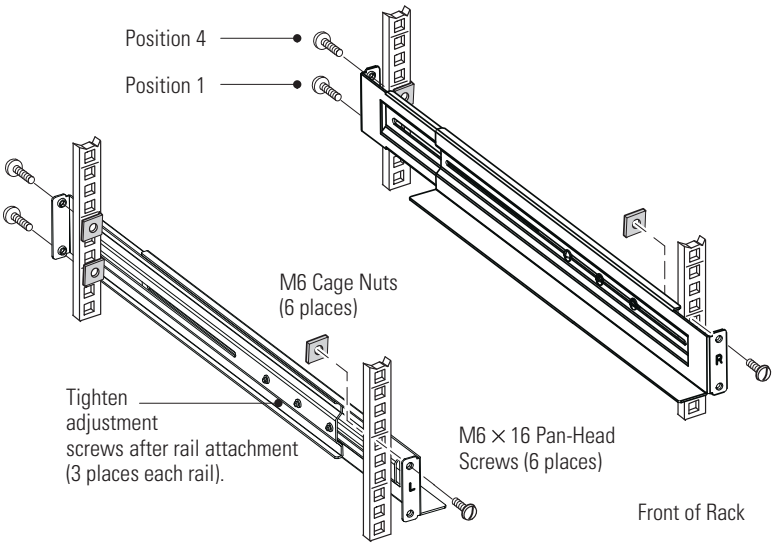

Figure 5. Securing the Rails

5. Repeat Steps 3 and 4 for the other rail assembly.
6. Tighten the three adjustment screws in the middle of each rail assembly.
7. If installing optional cabinets, repeat Step 1 through Step 6 for each rail kit.
8. Place the UPS on a flat, stable surface with the front of the cabinet facing you.
9. Align the mounting brackets with the screw holes on each side of the UPS and secure with the supplied M4x8 flat-head screws (see Figure 6).

NOTE There are two sets of four mounting holes on each side of the UPS: a forward position and a middle position. Choose the position that meets your configuration needs.

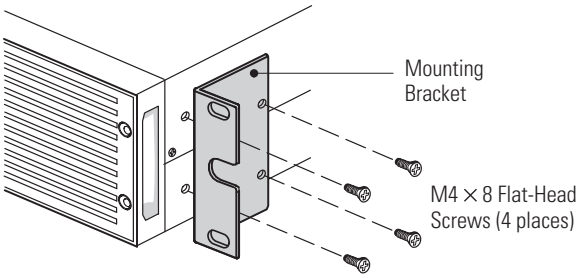

Figure 6. Installing the Mounting Brackets (Forward Position Shown)

10. If installing optional cabinets, repeat Steps 8 and 9 for each cabinet.
11. Slide the UPS and any optional cabinets into the rack.
12. Secure the front of the UPS to the rack using two M6x16 pan-head screws and two M6 cage nuts on each side (see Figure 7). Install the bottom screw on each side through the bottom hole of the mounting bracket and the bottom hole of the rail.

    Repeat for any optional cabinets.

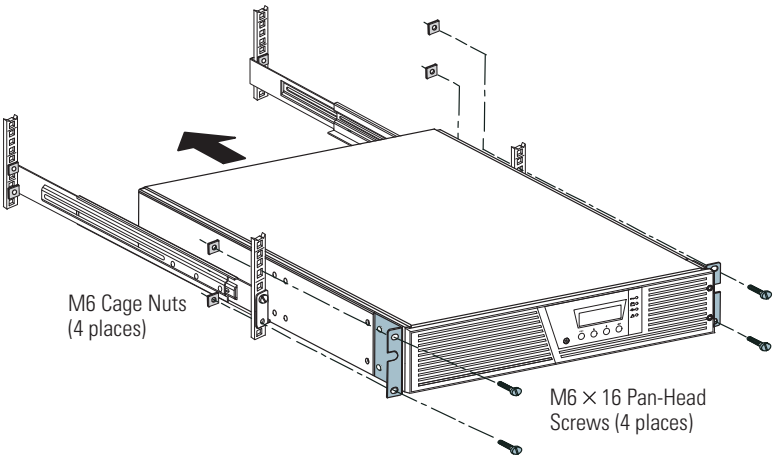

Figure 7. Securing the Front of the Cabinet

13. **Optional.** Insert a rear stop bracket through the inside of each rail behind the UPS. Rotate each bracket and slide the bracket until it fits tightly against the UPS's rear panel. Secure each bracket to the UPS with one M3x8 pan-head screw. See Figure 8.

    Repeat for any optional cabinets.

14. Continue to the following section, "Rackmount Wiring Installation."

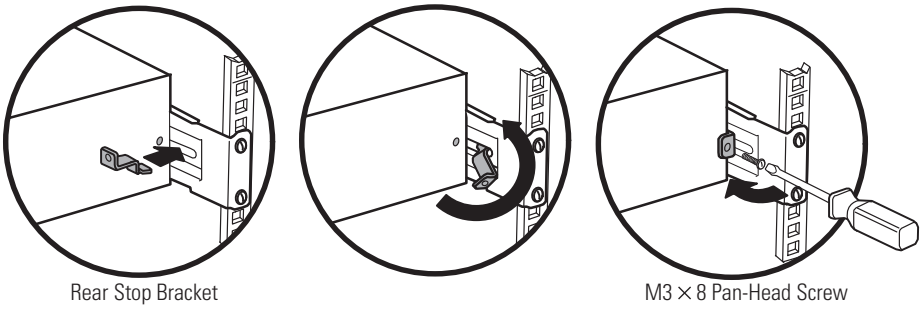

Figure 8. Securing the Back of the Cabinet (Optional)

Rackmount Wiring Installation

This section explains:

- Installing the UPS, including connecting the UPS internal batteries
- Connecting any optional EBMs

Installing the UPS

NOTE 1 Do not make unauthorized changes to the UPS; otherwise, damage may occur to your equipment and void your warranty.

NOTE 2 Do not connect the UPS power cord to utility until after installation is completed.

To install the UPS:

1. Remove the UPS right front cover (behind the LCD control panel). See Figure 9.

   To remove the cover, remove and retain the two screws on the right side of the cover. Grasp the top and bottom of the cover and slide the cover to the **right**.

IMPORTANT

A ribbon cable connects the LCD control panel to the UPS. Do not pull on the cable or disconnect it.

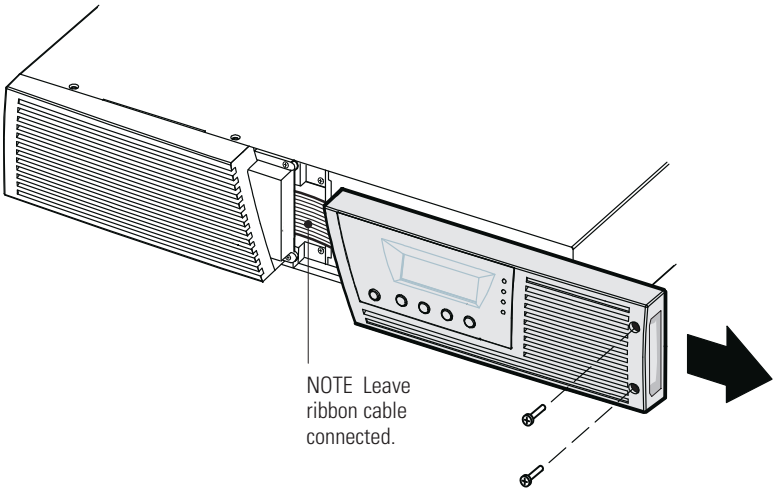

Figure 9. Removing the UPS Right Front Cover

CAUTION

A small amount of arcing may occur when connecting the internal batteries. This is normal and will not harm personnel. Connect the cables quickly and firmly.

2. Connect the internal battery connector (see Figure 10).

   Up to 1500 VA models. Unclip the top rightmost white connector from the battery panel and move it to the left to connect to the white connector at the top left. Connect red to red, and black to black. Press the two parts tightly together to ensure a proper connection. Clip the wires of the rightmost connector to the battery panel in its new position.

   2000–3000 VA models. Connect red to red, and black to black. Press the two parts tightly together to ensure a proper connection.

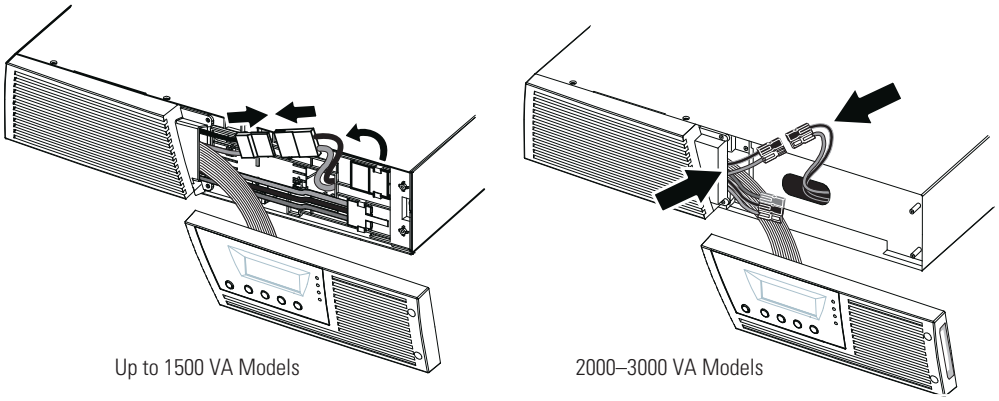

Figure 10. Connecting the UPS Internal Batteries

3. If you are installing EBMs, see the following section, "Connecting the EBM(s)," before continuing with the UPS installation.
4. Replace the UPS right front cover.

   To replace the cover, verify that the ribbon cable is protected and (if EBMs are installed) the EBM cable is routed through the knockout on the bottom of the cover. Slide the cover to the left until it aligns with the left front cover. Reinstall the two screws on the right side of the right front cover.
5. If you are installing power management software, connect your computer to one of the communication ports or optional connectivity card (see page 42 and page 43). For the communication ports, use an appropriate cable (not supplied).
6. If your rack has conductors for grounding or bonding of ungrounded metal parts, connect the ground cable (not supplied) to the ground bonding screw. See "Rear Panels" on page 73 for the location of the ground bonding screw for each model.
7. If an emergency power-off (disconnect) switch is required by local codes, see "Remote Emergency Power-off" (REPO) on page 43 to install the REPO switch before powering on the UPS.
8. Continue to "UPS Initial Startup" on page 26.

Connecting the EBM(s)

To install the optional EBM(s) for a UPS:

1. On the bottom of the UPS right front cover, remove the EBM cable knockout (see Figure 11).

NOTE Use care to protect the LCD control panel and the connected ribbon cable from damage.

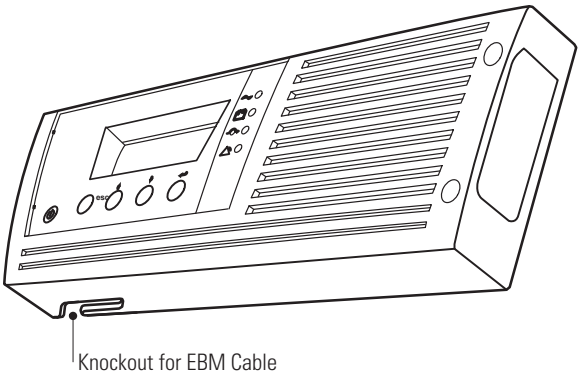

Figure 11. Removing the EBM Cable Knockout

2. Remove the front cover of each EBM (see Figure 12).

   To remove the cover, remove and retain the two screws on the right side of the cover. Grasp the sides of the cover and slide the cover to the **left** and then away from the cabinet.

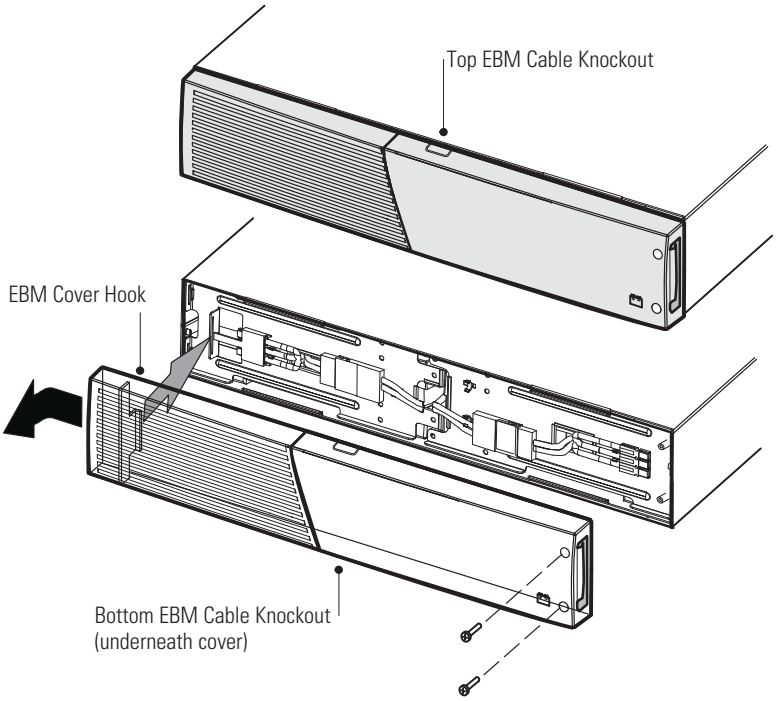

Figure 12. Removing the EBM Front Cover

3. For the bottom (or only) EBM, remove the EBM cable knockout on the top of the EBM front cover. See Figure 12 for the location of the top EBM cable knockout.

4. If you are installing more than one EBM, for each additional EBM remove the EBM cable knockout on the top **and** bottom of the EBM front cover. See Figure 12 for the location of the EBM cable knockouts.

CAUTION

A small amount of arcing may occur when connecting an EBM to the UPS. This is normal and will not harm personnel. Insert the EBM cable into the UPS battery connector quickly and firmly.

5. Plug the EBM cable(s) into the battery connector(s) as shown in Figure 13. Up to four EBMs may be connected to the UPS.

   Up to 1500 VA models. Unclip the EBM connector on the UPS battery panel and connect it to the EBM connector on the EBM. Press the two parts tightly together to ensure a proper connection.

   2000–3000 VA models. Connect red to red, black to black, and green to green. Press the two parts tightly together to ensure a proper connection.

   All models. To connect a second EBM, unclip the EBM connector on the first EBM and pull gently to extend the wiring to the EBM connector on the second EBM. Repeat for any additional EBMs.

6. Verify that the EBM connections are tight and that adequate bend radius and strain relief exist for each cable.

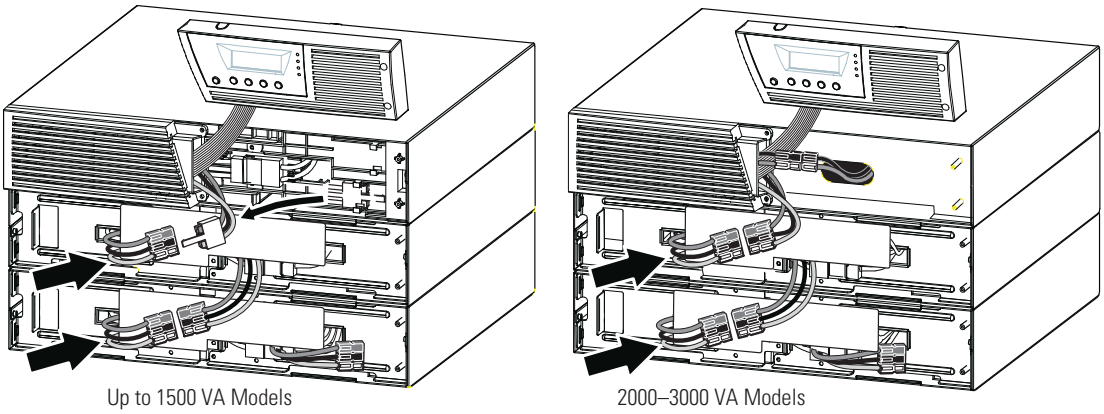

Up to 1500 VA Models 2000–3000 VA Models

Figure 13. Typical EBM Installation

7. Replace the EBM front cover.

   To replace the cover, verify that the EBM cables are routed through the EBM cover knockouts, then slide the cover from the left to the right until it connects with the cover hook near the left side of the EBM cabinet. Reinstall the two screws on the right side of the front cover. For reference, see Figure 12 on page 20.

   Repeat for each additional EBM.

8. Verify that all wiring connecting the UPS and EBM(s) is installed behind the front covers and is inaccessible to users.

9. Return to Step 4 on page 19 to continue the UPS installation.

Tower Installation

The Eaton 9130 tower cabinet comes fully assembled and ready to connect.

CAUTION

The cabinet is heavy (see page 60). Removing the cabinet from its carton requires a minimum of two people.

To install the cabinet:

1. Place the UPS on a flat, stable surface in its final location.
2. If installing additional cabinets, place them next to the UPS in their final location.
3. Continue to the following section, "Tower Wiring Installation."

Tower Wiring Installation

This section explains:

- Installing the UPS, including connecting the UPS internal batteries
- Connecting any optional EBMs

Installing the UPS

NOTE 1 Do not make unauthorized changes to the UPS; otherwise, damage may occur to your equipment and void your warranty.

NOTE 2 Do not connect the UPS power cord to utility until after installation is completed.

To install the UPS:

1. Remove the UPS front cover (see Figure 14).

   To remove the cover, push down on the top of the cover and pull the cover toward you to unclip it from the cabinet.

NOTE A ribbon cable connects the LCD control panel to the UPS. Do not pull on the cable or disconnect it.

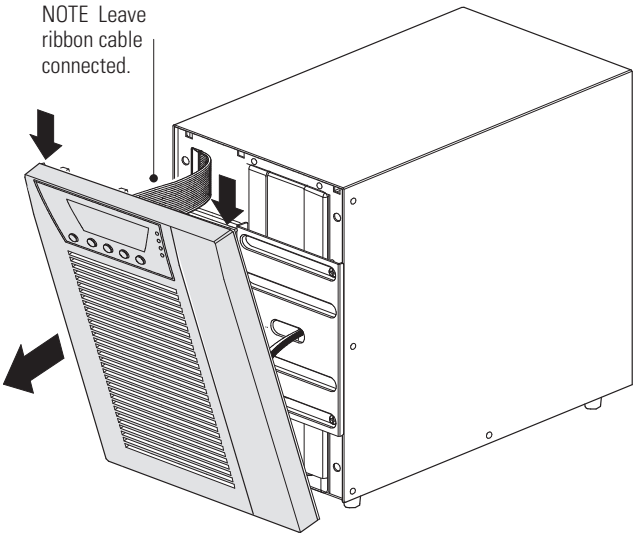

Figure 14. Removing the UPS Front Cover

CAUTION

A small amount of arcing may occur when connecting the internal batteries. This is normal and will not harm personnel. Connect the cables quickly and firmly.

2. Connect the internal battery connector (see Figure 15).

   Connect the white connectors together, connecting red to red, and black to black. Press the two parts tightly together to ensure a proper connection.

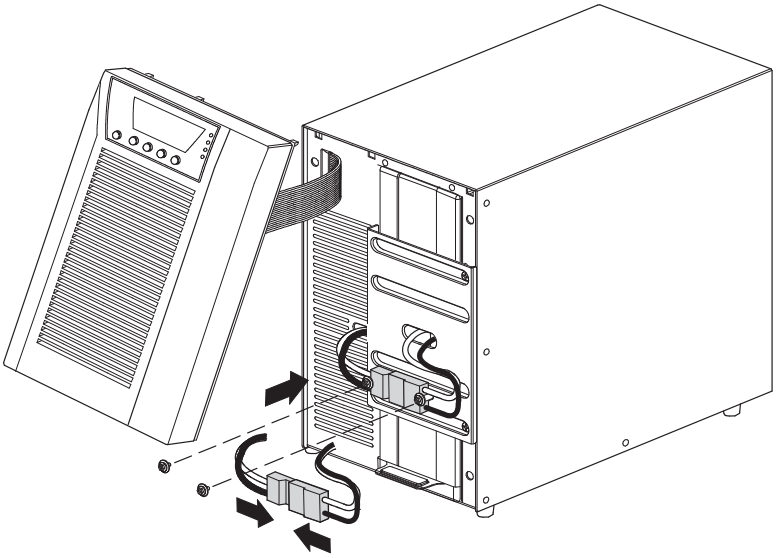

Figure 15. Connecting the UPS Internal Batteries

3. Remove the two screws from the screw mounts and retain (see Figure 15).
4. Place the battery connector between the screw mounts. Reinstall the two screws to hold the connector in place.

5. Replace the UPS front cover.

   To replace the cover, verify that the ribbon cable is protected, then insert the clips on the back of the cover into the cabinet and push firmly to snap the cover into place.

6. If you are installing power management software, connect your computer to one of the communication ports or optional connectivity card (see page 42 and page 43). For the communication ports, use an appropriate cable (not supplied).

7. If an emergency power-off (disconnect) switch is required by local codes, see "Remote Emergency Power-off" (REPO) on page 43 to install the REPO switch before powering on the UPS.

8. If you are installing EBM(s), continue to the following section, "Connecting the EBM(s)." Otherwise, continue to "UPS Initial Startup" on page 26.

Connecting the EBM(s)

To install the optional EBM(s) for a UPS:

1. On the rear of the UPS, remove the cable retention clip covering the battery connector. Retain the clip and screws. See Figure 16.

2. **Installations with one EBM only.** Remove the cable retention clip covering the right (for 1000–1500 VA models) or upper (for 2000–3000 VA models) battery connector. Retain the clip and screws.

3. **Installations with more than one EBM.** For all EBMs except the last EBM, remove the cable retention clips covering both battery connectors. Do not remove the clip from the second battery connector on the last EBM. Retain the clips and screws.

CAUTION

A small amount of arcing may occur when connecting an EBM to the UPS. This is normal and will not harm personnel. Insert the EBM cable into the UPS battery connector quickly and firmly.

4. Plug the EBM cable(s) into the battery connector(s) as shown in Figure 16. Up to four EBMs may be connected to the UPS.

5. For each cable retention clip removed, rotate the clip and install it under each EBM cable connection using the retained screws.

6. Verify that the EBM connections are tight and that adequate bend radius and strain relief exist for each cable.

7. Continue to "UPS Initial Startup" on page 26.

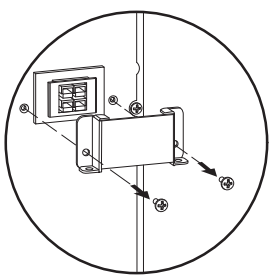

Remove cable retention clip.

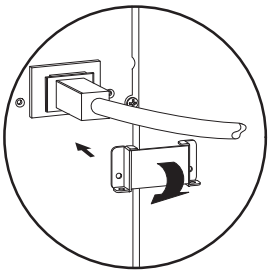

Plug in EBM cable. Rotate clip.

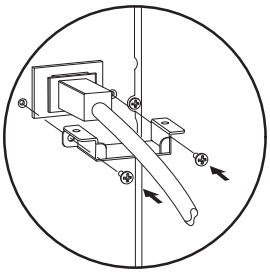

Reinstall cable retention clip.

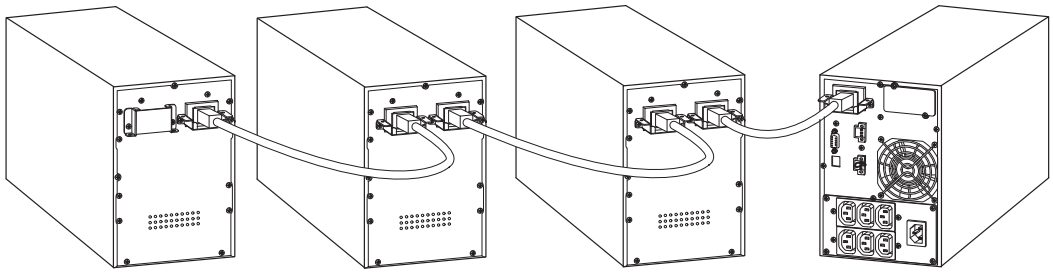

1000–1500 VA Models

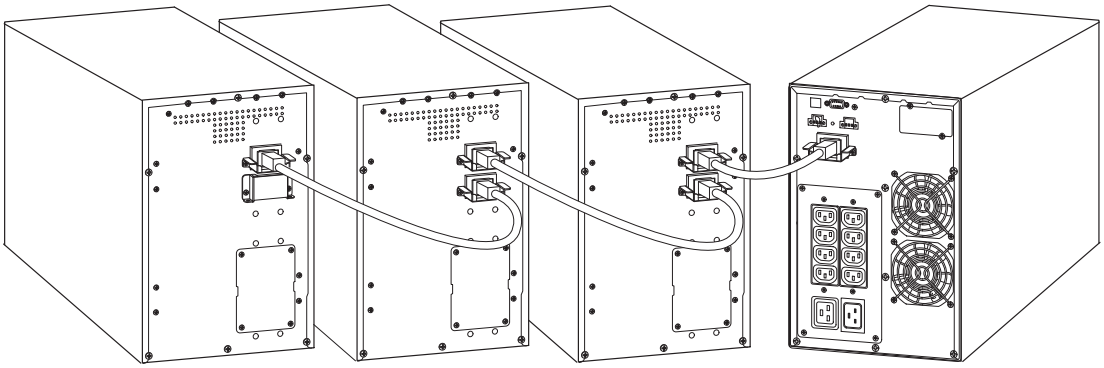

2000–3000 VA Models

Figure 16. Connecting the EBMs

UPS Initial Startup

To start up the UPS:

NOTE Verify that the total equipment ratings do not exceed the UPS capacity to prevent an overload alarm.

1. Verify that the internal batteries are connected.

   Rack models. See "Installing the UPS" on page 18.

   Tower models. See "Installing the UPS" on page 22.

2. If optional EBMs are installed, verify that the EBMs are connected to the UPS.

   Rack models. See "Connecting the EBM(s)" on page 20.

   Tower models. See "Connecting the EBM(s)" on page 24.

3. Plug the equipment to be protected into the UPS, but do not turn on the protected equipment.
4. Make any necessary provisions for cord retention and strain relief.
5. **Models without an attached power cord**. Plug the detachable UPS power cord into the input connector on the UPS rear panel.
6. Plug the UPS power cord into a power outlet.

   The UPS front panel display illuminates and shows a status of "UPS initializing…"

7. Verify that the UPS transfers to Standby mode ("UPS on standby").
8. Press the ⏻ button on the UPS front panel for at least one second.

   The UPS front panel display changes status to "UPS starting…"

9. Check the UPS front panel display for active alarms or notices. Resolve any active alarms before continuing. See "Troubleshooting" on page 89.

   If the ⚠ indicator is on, do not proceed until all alarms are clear. Check the UPS status from the front panel to view the active alarms. Correct the alarms and restart if necessary.

10. Verify that the ∿ indicator illuminates solid, indicating that the UPS is operating normally and any loads are powered.

    The UPS should be in Normal mode.

11. Press the ESC button until the start screen appears.
12. If optional EBMs are installed, see "Configuring the UPS for EBMs" on page 38 to set the number of installed EBMs.
13. To change any other factory-set defaults, see Table 3 on page 31.

NOTE 1 Eaton recommends setting the date and time.

NOTE 2 At initial startup, the UPS sets system frequency according to input line frequency (input frequency auto-sensing is enabled by default). After initial startup, auto-sensing is disabled until manually re-enabled by output frequency setting.

NOTE 3 At initial startup, input voltage auto-sensing is disabled by default. When manually enabled by output voltage setting, at the next AC startup the UPS sets output voltage according to input line voltage. After the subsequent startup, auto-sensing is disabled until manually re-enabled by output voltage setting.

14. If you installed an optional REPO, test the REPO function:

    Activate the external REPO switch. Verify the status change on the UPS display.

    Deactivate the external REPO switch and restart the UPS.

NOTE The internal batteries charge to 90% capacity in less than 3 hours. However, Eaton recommends that the batteries charge for 48 hours after installation or long-term storage. If optional EBMs are installed, see the recharge times listed in Table 30 on page 72.

15. Keep your UPS firmware updated. See "Updating the UPS Firmware" on page 55.

Chapter 4 Operation

This chapter contains information on how to use the Eaton 9130, including front panel operation, operating modes, UPS startup and shutdown, transferring the UPS between modes, retrieving the Event Log, setting the power strategy, and configuring bypass settings, load segments, and battery settings.

Control Panel Functions

The UPS has a four-button graphical LCD with backlight. It provides useful information about the UPS itself, load status, events, measurements, and settings (see Figure 17).

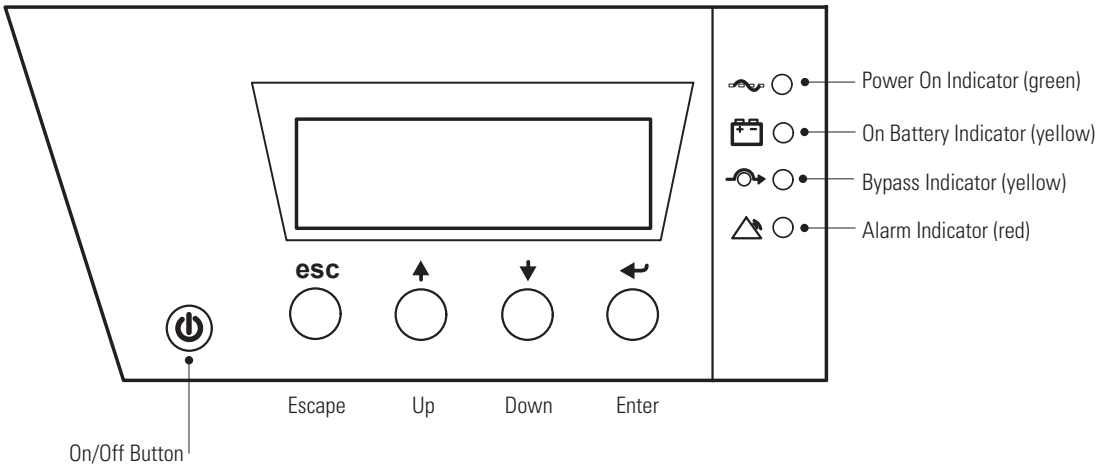

Figure 17. Eaton 9130 Control Panel

NOTE The ⏻ button controls only the UPS output.

Table 1 shows the indicator status and description.

Table 1. Indicator Descriptions

Indicator	Status	Description
Green	On	The UPS is operating normally.
	Flashing	A new information message is active.
Yellow	On	The UPS is in Battery mode.
	Flashing	The battery voltage is below the warning level.
Yellow	On	The UPS is in Bypass mode. The UPS is operating normally on bypass during High Efficiency operation.
Red	On	The UPS has an active alarm or fault. See “Troubleshooting” on page 89 for additional information.

Changing the Language

Press and hold the first button on the left for approximately three seconds to select the language menu. This action is possible from any LCD menu screen.

Display Functions

As the default or after 15 minutes of inactivity, the LCD displays the start screen.

The backlit LCD automatically dims after 15 minutes of inactivity. Press any button to restore the screen.

Press any button to activate the menu options. Use the two middle buttons (↑ and ↓) to scroll through the menu structure. Press the Enter (↵) button to select an option. Press the ESC button to cancel or return to the previous menu.

Table 2 shows the basic menu structure.

Table 2. Menu Map for Display Functions

Main Menu	Submenu	Display Information or Menu Function
UPS Status		Main status (mode and load) / Notice or Alarm status (if any) / Battery status (state and charge level)
Event Log		Displays up to 127 events and alarms The Event Log is also available through the serial port. See "Retrieving the Event Log" on page 36.
Measurements		Load W VA / Load A pf / Output V Hz / Input V Hz / Bypass V Hz / Input Line Events / Battery V min
Control	Go to Bypass	Transfers the UPS system to internal Bypass mode When this command is active, the option changes to "Go to Normal."
	Start Battery Test	Starts a manual battery test See "Testing New Batteries" on page 55.
	Reset Error State	Clears a "Battery Test Failed" alarm
	Load Segments	Load segment 1: ON | OFF Load segment 2: ON | OFF These commands overrule user settings for load segments. See "Configuring Load Segments" on page 38.
	Restore Factory Settings	Returns all settings to original values only after UPS is powered down. The following settings do not change: "Output voltage setting "Site wiring fault alarm "REPO terminal setting "Serial number "Part number
Identification		UPS Type / Part Number / Serial Number / Firmware
Settings	User Settings	See Table 3 for details.
	Service Settings	This menu is password-protected.

User Settings

The following table displays the options that can be changed by the user.

Table 3. User Settings

Description	Available Settings	Default Setting
Change Language	[English] [French] [Spanish] [German] [Russian] Menus, status, notices, and alarms are in all supported languages. UPS faults, Event Log data, and settings are in English only.	English
User Password	[Enabled] [Disabled] If Enabled is selected, the password is USER.	Disabled
Audible Alarms	[Enabled] [Disabled]	Enabled
Set Date and Time **NOTE** Time is a 24-hour clock.	Set Year, Month, Day, Hours, Minutes Date: yyyy/mm/dd Time: hh:mm	2008/01/01 12:00
Signal Inputs **	Setup: [Not Used] [Force Bypass] [Remote Shutdown] [Delayed Shutdown] [On Generator] [Building Alarm 1] Active: [High] [Low] See "Programmable Signal Inputs" on page 46.	RS232-3: Not Used, High cXSlot Serial: Delayed Shutdown, High cXSlot Signal: Remote Shutdown, Low
Relay Configuration **	[UPS ok] [On Bypass] [On Battery] [Battery Low] [Ext. Charger On] See "Relay Output Contacts" on page 45.	Standard: UPS ok RS232-1: Battery Low RS232-8: On Battery cXSlot-K1: On Battery cXSlot-K2: Battery Low cXSlot-K3: UPS ok cXSlot-K4: On Bypass
Serial Port Configuration	[1200 bps] [2400 bps] [9600 bps] USB communication requires 9600 bps.	RS232: 9600 bps cXSlot: 9600 bps
Control Commands from Serial Port	[Enabled] [Disabled]	RS232: Enabled cXSlot: Enabled
Output Voltage **NOTE** The UPS must be in Standby Mode when you change the output voltage.	[100V] [110V] [120V] [127V] [Autosensing] [200V] [208V] [220V] [230V] [240V] [Autosensing]	120V (low voltage models) 230V (high voltage models)
Output Frequency **NOTE** The UPS must be in Standby Mode when you change the output frequency.	[50Hz] [60Hz] [Autosensing]	Autosensing
Frequency Converter	[Enabled] [Disabled] If Enabled, the UPS operates as a frequency converter, with bypass operation and all bypass-related alarms disabled.	Disabled

NOTE * See "Configuring Bypass Settings" on page 37.

NOTE ** The cXSlot Signal setting is for a communication card. The cXSlot Serial setting is for the relay card.

Table 3. User Settings (Continued)

Description	Available Settings	Default Setting
Overload Alarm Level	[10%] [20%] [30%]...[100%] These values affect alarm level only, not UPS operation such as transfers or shutdown.	100% Generates the Output Overload alarm at the set level.
Transfer to Bypass When Overload*	[Immediate] [After Delay] If Immediate, transfer occurs at load >102%. If After Delay, transfer occurs according to Table 22 on page 63.	Immediate
Power Strategy	[Normal] [High Efficiency] See "Setting Power Strategy" on page 36.	Normal
Automatic Start Delay	[Disabled] [No Delay] [1s] [2s]...[32767s] If Disabled, automatic restart is not allowed. See "Configuring Load Segments" on page 38.	Load Segment 1: No Delay Load Segment 2: No Delay
Automatic on Battery Shutdown	[Disabled] [No Delay] [1s] [2s]...[32767s] Shutdown cancels if utility returns before the delay expires. See "Configuring Load Segments" on page 38.	Load Segment 1: Disabled Load Segment 2: Disabled
Start on Battery **NOTE** Utility must be present and output enabled at initial UPS startup.	[Enabled] [Disabled] After initial startup, battery voltage must exceed 1.85 volts per cell to start on battery.	Enabled
Energy Saving Mode	[Disabled] [50W] [100W]...[1000W] UPS output is turned off if the UPS is on battery and output power is below the selected level.	Disabled
Remote Shutdown Delay	[No Delay] [1s] [2s]…[10800s]	No Delay
Delayed Shutdown Delay	[No Delay] [1s] [2s]…[10800s]	120s
Behavior on Rectifier Input Loss **NOTE** Available only in >3000 VA UPSs with separate supply sources for the rectifier and bypass inputs.	[Prefer Battery] [Prefer Bypass] If Prefer Bypass, upon loss the UPS will transfer to bypass in 3 seconds and remain as long as bypass is available.	Prefer Battery
On Battery Notice Delay	[0] [1s] [2s]…[99s]	5s
Site Wiring Fault Alarm	[Enabled] [Disabled] An active site wiring fault alarm prevents startup or, if operating, forces operation to Battery mode and disables bypass.	Enabled for L, i, and G (AU) models (120V, 230V, and 240V) Disabled for G and G (EU) models (208V)
Bypass Voltage Low Limit*	[-4%] [-5%] … [-20%] of nominal	-15% of nominal
Bypass Voltage High Limit*	[+4%] [+5%] … [+20%] of nominal	+10% of nominal
Qualify Bypass*	[Never] [When in Spec] [Always on UPS Fault] [Always]	When in Spec
Synchronization Window*	[Sync Disabled] [±0.5 Hz] [±1.0 Hz] [±2.0 Hz] [±3.0 Hz]	±2.0 Hz
Unsynchronized Transfers*	[Enabled] [Disabled]	Enabled

NOTE * See "Configuring Bypass Settings" on page 37.

NOTE ** The cXSlot Signal setting is for a communication card. The cXSlot Serial setting is for the relay card.

Table 3. User Settings (Continued)

Description	Available Settings	Default Setting
Number of Battery Strings	[0] [1] [2] … [10] See "Configuring the UPS for EBMs" on page 38.	1
Battery Charge Mode	[ABM Cycling] [Constant]	ABM Cycling
Temperature Compensated Charging	[Enabled] [Disabled] If Disabled, the default charger voltages for 25°C (77°F) are assumed.	Enabled
Battery Charge % to Restart	[Not Checked] [10] [20] … [100] If a percentage is selected, automatic restart (if enabled) occurs when the battery's charge reaches the selected level.	Not Checked
Battery Low Alarm	[Immediate] [2 min] [3 min] [5 min] The "Battery Low" alarm triggers when the set amount of backup time (approximately) remains in the batteries. If set to Immediate, the alarm activates at the same time as the "UPS on Battery" notice.	3 min
Automatic Battery Support Tests	[Enabled] [Disabled] See "Running Automatic Battery Tests" on page 39.	Enabled
Ambient Temperature Warning	[Enabled] [Disabled]	Enabled
Predictive Maintenance Notices	[Enabled] [Disabled]	Enabled
Remote Emergency Power-off (REPO) Input Polarity	[Open] [Closed]	Open
Logic Power Off	[0] [1...120 min] See "Logic Power Off" on page 36.	0 min

NOTE * See "Configuring Bypass Settings" on page 37.

NOTE ** The cXSlot Signal setting is for a communication card. The cXSlot Serial setting is for the relay card.

Operating Modes

The Eaton 9130 front panel indicates the UPS status through the UPS indicators (see Figure 17 on page 29).

Normal Mode

During Normal mode, the indicator illuminates solid and the UPS is powered from the utility. The UPS monitors and charges the batteries as needed and provides filtered power protection to your equipment.

The UPS may at times silently implement a High Alert mode, usually when incoming utility conditions are unfavorable. In High Alert mode, the UPS disables the battery support test to ensure maximum capacity from the batteries if needed. The UPS will remain in High Alert for 24 hours or until changed by a Power Strategy command before returning to its previous mode.

Optional High Efficiency and Energy Saving settings minimize heat contribution to the rack environment. See "User Settings" on page 31.

Battery Mode

When the UPS is operating during a power outage, the alarm beeps once every five seconds and the indicator illuminates solid.

When the utility power returns, the UPS transfers to Normal mode operation while the battery recharges.

If battery capacity becomes low while in Battery mode, the indicator flashes slowly and the audible alarm beeps once every second. If the "Battery Low" alarm is set, the indicator also illuminates solid. This warning is approximate, and the actual time to shutdown may vary significantly.

NOTE Depending on the UPS load and the number of Extended Battery Modules (EBMs) connected, the "Battery Low" warning may occur before the batteries reach 25% capacity. See Table 26 to Table 29 starting on page 67 for estimated rack and tower PF0.9 and PF0.7 runtimes.

When utility power is restored after the UPS shuts down, the UPS automatically restarts.

Bypass Mode

In the event of a UPS overload or internal failure, the UPS transfers your equipment to utility power. Battery mode is not available and your equipment is not protected; however, the utility power continues to be passively filtered by the UPS. The indicator illuminates.

The UPS remains in Bypass mode for at least five seconds (if the bypass source remains acceptable). If three transfers to Bypass occur within 10 minutes for any reason other than user command, the UPS locks in Bypass for 1 hour or until any control button is pressed.

The UPS transfers to Bypass mode when:

- The user activates Bypass mode through the front panel.
- The UPS detects an internal failure.
- The UPS has an overtemperature condition.
- The UPS has an overload condition listed in Table 22 on page 63.

NOTE The UPS shuts down after a specified delay for overload conditions listed in Table 22 on page 63. The UPS remains on to alarm the fault.

Standby Mode

When the UPS is turned off and remains plugged into a power outlet, the UPS is in Standby mode. The indicator is off, indicating that power is not available to your equipment. The battery recharges when necessary, and the communication bay is powered.

If utility fails and output turns off due to drained batteries or UPS internal failure, the UPS alarms in Standby mode and powers the communication bay for 1 hour 30 minutes or until battery voltage drops below 1.75 volts per cell (whichever occurs first).

If utility fails while the UPS is in Standby mode, the logic power supply turns off in approximately 10 seconds.

If the UPS is waiting on commands and utility fails, unit and logic power turn off in approximately 30 seconds.

UPS Startup and Shutdown

To start up or shut down the UPS, see:

- "Starting the UPS" on page 35
- "Starting the UPS on Battery" on page 35
- "UPS Shutdown" on page 36

Starting the UPS

To start the UPS:

1. Verify that the UPS power cord is plugged in.
2. Switch on utility power where the UPS is connected.

   The UPS front panel display illuminates and shows a status of "UPS initializing…".
3. Verify that the UPS transfers to Standby mode ("UPS on standby").
4. Press the button on the UPS front panel for at least one second.

   The UPS front panel display changes status to "UPS starting…".
5. Check the UPS front panel display for active alarms or notices. Resolve any active alarms before continuing. See "Troubleshooting" on page 89.

   If the indicator is on, do not proceed until all alarms are clear. Check the UPS status from the front panel to view the active alarms. Correct the alarms and restart if necessary.
6. Verify that the indicator illuminates solid, indicating that the UPS is operating normally and any loads are powered.

   The UPS should be in Normal mode.
7. Press the ESC button until the start screen appears.

Starting the UPS on Battery

NOTE 1 Before using this feature, the UPS must have been powered by utility power with output enabled at least once.

NOTE 2 Battery start can be disabled. See the "Start on Battery" setting in "User Settings" on page 31.

To start the UPS on battery:

1. Press the ⏻ button on the UPS front panel until the UPS front panel display illuminates and shows a status of "UPS starting…".

   The UPS cycles through Standby mode to Battery mode. The indicator illuminates solid. The UPS supplies power to your equipment.

2. Check the UPS front panel display for active alarms or notices besides the "UPS on Battery" notice and notices that indicate missing utility power. Resolve any active alarms before continuing. See "Troubleshooting" on page 89.

   Check the UPS status from the front panel to view the active alarms. Correct the alarms and restart if necessary.

3. Press the ESC button until the start screen appears.

UPS Shutdown

To shut down the UPS:

1. Press the ⏻ button on the front panel for three seconds.

   The UPS starts to beep and shows a status of "UPS off pending…". The UPS then transfers to Standby mode, and the indicator turns off.

NOTE Releasing the ⏻ button before three seconds returns the UPS to its original operating mode.

2. Switch off utility power where the UPS is connected.

Transferring the UPS Between Modes

From Normal to Bypass Mode. Press any button to activate the menu options, then select CONTROL and GO TO BYPASS.

From Bypass to Normal Mode. Press any button to activate the menu options, then select CONTROL and GO TO NORMAL.

Retrieving the Event Log

To retrieve the Event Log through the display:

1. Press any button to activate the menu options, then select EVENT LOG.
2. Scroll through the listed events.

Logic Power Off

If normal utility power is restored within the time set by the Logic Power Off parameter, the unit restarts automatically. If AC power is not restored within this time, the logic power turns off.

NOTE The equipment does not restart automatically when normal utility power is restored if the unit is shut down by power shutdown management software or a connectivity card, such as the Intelligent Power Protector® (IPP) or a Network Card-MS.

Setting Power Strategy

On the High Efficiency setting, the UPS operates normally on Bypass, transfers to inverter in less than 10 ms when utility fails, and transfers back to Bypass in 1 minute after utility returns. The indicator illuminates when the UPS transfers to Bypass.

NOTE High Efficiency operation is available after one minute of stable power.

To set the power strategy:

1. Press any button to activate the menu options, then select SETTINGS, USER SETTINGS, and POWER STRATEGY.
2. Select HIGH EFFICIENCY or NORMAL, and ENTER to confirm.

Configuring Bypass Settings

The following settings are available for configuring Bypass operation.

Transfer to Bypass When Overload. The default forces a transfer to Bypass when any overload condition occurs. You can configure the setting for a delayed transfer, with the amount of delay determined by the amount of overload, as shown in Table 22 on page 63.

Bypass Voltage Low Limit. The default disables a transfer to Bypass if the measured bypass voltage level is below the nominal output voltage minus 15%. You can configure the setting for another percentage of nominal. This setting can be overruled by the "Qualify Bypass" setting.

Bypass Voltage High Limit. The default disables a transfer to Bypass if the measured bypass voltage level is above the nominal output voltage plus 10%. You can configure the setting for another percentage of nominal. This setting can be overruled by the "Qualify Bypass" setting.

Qualify Bypass. The default allows a transfer to Bypass only when Bypass is within the following specifications:

- Bypass voltage is between the "Bypass Voltage Low Limit" and "Bypass Voltage High Limit" settings.
- Bypass frequency is within nominal frequency ±5 Hz.
- The inverter is synchronized with Bypass when the "Unsynchronized Transfers" setting is disabled.

You can prohibit Bypass ("Never") or always allow Bypass with no specification checking ("Always"). For "Always on UPS Fault," transfer to Bypass is always made on UPS fault; otherwise, operation proceeds as with the default setting.

Synchronization Window. The UPS tries to synchronize with Bypass when the Bypass frequency is less than the value set for the "Synchronization Window" setting. When the Bypass frequency is more than the set value, the UPS goes to nominal frequency. On Bypass the synchronization window is ±5 Hz. If synchronization is disabled ("Sync Disabled"), the UPS will synchronize only when operating on Bypass.

Unsynchronized Transfers. The default allows an unsynchronized transfer to Bypass. You can configure the setting to not allow such transfers. This setting can be overruled by the "Qualify Bypass" setting.

Configuring Load Segments

Load segments are sets of receptacles that can be controlled by power management software or through the display, providing an orderly shutdown and startup of your equipment. For example, during a power outage, you can keep key pieces of equipment running while you turn off other equipment. This feature allows you to save battery power.

Each UPS has two configurable load segments:

- Load Segment 1: Upper outlets and higher rated outlets if available.
- Load Segment 2: Lower outlets

See "Rear Panels" on page 73 for load segments for each UPS model.

To control the load segments with power management software, see your power management software manual for details (refer to www.eaton.com/pq/software for the latest information).

To control the load segments through the display:

1. Press any button to activate the menu options, then select CONTROL and LOAD SEGMENTS.
2. Set the desired load segment ON or OFF, and ENTER to confirm.
3. Set the other load segment if applicable.

To set the restart and shutdown delay times for each load segment:

1. Press any button to activate the menu options, then select SETTINGS, USER SETTINGS and AUTOMATIC START DELAY.
2. Set the restart delay for one load segment, and ENTER to confirm.
3. Set the other load segment if applicable.
4. Select AUTOMATIC ON BATTERY SHUTDOWN.
5. Set the shutdown delay for one load segment, and ENTER to confirm.
6. Set the other load segment if applicable.

NOTE Load segment On/Off commands issued through the Control menu overrule the user settings for load segments.

Configuring Battery Settings

Set the UPS for the number of EBMs installed, whether to run automatic battery tests, and automatic restart configuration.

Configuring the UPS for EBMs

To ensure maximum battery runtime, configure the UPS for the correct number of EBMs (see Table 4):

1. Press any button on the front panel display to activate the menu options, then select SETTINGS, USER SETTINGS, and NUMBER OF BATTERY STRINGS.
2. Use the ↑ or ↓ buttons to select the number of battery strings according to your UPS configuration:

Table 4. Configuring the UPS for EBMs

All UPS and EBM Cabinets	Number of Battery Strings
UPS only (internal batteries)	1 (default)
UPS + 1 EBM	3
UPS + 2 EBMs	5
UPS + 3 EBMs	7
UPS + 4 EBMs	9

NOTE If 0 is selected, no batteries are connected and all battery-related alarms are disabled.

NOTE The UPS contains one battery string; each EBM contains two battery strings.

3. Press the ↵ button to save the setting.
4. Press the ESC button until the start screen appears.

Running Automatic Battery Tests

Automatic battery tests run approximately every 30 days, unless disabled. During the test, the UPS transfers to Battery mode and discharges the batteries for 25 seconds under the existing load.

NOTE The "UPS on Battery" notice and the "Battery Low" alarm do not activate during a battery test.

For automatic battery tests to run:

- The "Automatic Battery Support Tests" setting must be enabled.
- The UPS must be in Normal mode, with no active alarms.
- The batteries must be fully charged.
- The bypass voltage must be acceptable.
- No manual battery test was initiated previously in the same charging cycle.

To pass the battery test, the battery voltage must remain above the threshold value during discharge.

Configuring Automatic Restart

The UPS automatically restarts if utility returns after the output was shut off due to exhausted batteries, a shutdown input signal, or automatic shutdown command.

You can set the load segment for the amount of time to delay the restart once utility returns, using the "Automatic Start Delay" setting. You can also configure UPS restart to depend on the battery charge level, using the "Battery Charge % to Restart" setting.

Chapter 5 Communication

This section describes the:

- Communication ports (RS-232 and USB)
- Connectivity cards
- Remote Emergency Power-off (REPO)
- Relay output contacts
- Programmable signal inputs
- Power management and protection software

Figure 18 shows the location of the communication options and control terminals on a typical UPS.

See "Rear Panels" on page 73 for rear panel diagrams for each model.

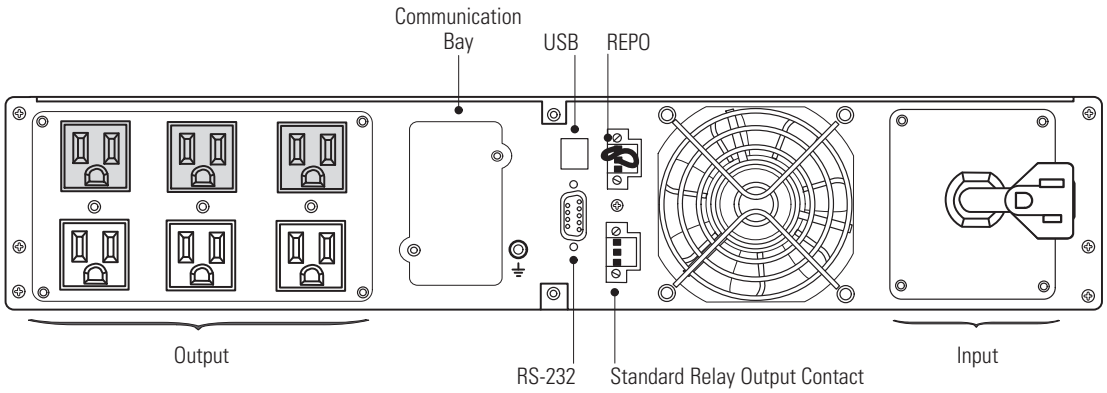

Figure 18. Communication Options and Control Terminals (PW9130L1000R-XL2U Model Shown)

Installing Communication Options and Control Terminals

To install the communication options and control terminals:

1. Install the appropriate connectivity card and/or necessary cable(s) and connect the cables to the appropriate location.

   See Figure 18 and the following section, "Communication Options," for detailed information.

2. Route and tie the cable(s) out of the way.
3. Continue to "Operation" on page 29 to start up the UPS.

Communication Options

The Eaton 9130 has serial communication capabilities through the USB and RS-232 communication ports or through a connectivity card in the available communication bay.

The UPS supports two serial communication devices according to Table 5:

Table 5. Serial Communication Devices

Independent	Multiplexed	
Communication Bay	**USB**	**RS-232**
Any connectivity card	Available	Not in use
Any connectivity card	Not in use	Available

NOTE 1 You can configure relays, signal inputs, and the serial port baud rate through the front panel menus (see Table 3 on page 31).

NOTE 2 The communication speed of the USB port is fixed at 9600 bps.

RS-232 and USB Communication Ports

To establish communication between the UPS and a computer, connect your computer to one of the UPS communication ports using an appropriate communication cable (not supplied). See Figure 18 for the communication port locations.

When the communication cable is installed, power management software can exchange data with the UPS. The software polls the UPS for detailed information on the status of the power environment. If a power emergency occurs, the software initiates the saving of all data and an orderly shutdown of the equipment.

The cable pins for the RS-232 communication port are identified in Figure 19, and the pin functions are described in Table 6.

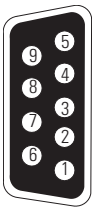

Figure 19. RS-232 Communication Port (DB-9 Connector)

Table 6. RS-232 Communication Port Pin Assignment

Pin Number	Signal Name	Function	Direction from the UPS
1	DCD	Battery Low signal[1,3]	Out
2	RxD	Transmit to external device	Out
3	TxD	Receive from external device[2]	In
4	DTR	PnP from external device (tied to Pin 6)	In
5	GND	Signal common (tied to chassis)	—
6	DSR	To external device (tied to Pin 4)	Out
7	RTS	No connection	In
8	CTS	On Battery signal[1,3]	Out
9	RI	+8-12 Vdc power	Out

NOTE [1] Configurable; see the "Relay Configuration" setting in "User Settings" on page 31.

NOTE [2] If Pin 3 receives a Low (+V) signal for ≥5 seconds, the UPS executes the command selected by the "Signal Inputs" setting in "User Settings" on page 31.

NOTE [3] When the selected condition is active, output signals on Pins 1 and 8 shift from Low (negative voltage) to High (positive voltage). When the condition no longer exists, the output signal returns to Low.

Connectivity Cards

Connectivity cards allow the UPS to communicate in a variety of networking environments and with different types of devices. The Eaton 9130 has one available communication bay for the following connectivity cards (see Figure 20):

- Network Card-MS (replaces 103006826 and 66102) has SNMP and HTTP capabilities as well as monitoring through a Web browser interface; connects to a twisted-pair Ethernet (10/100BaseT) network. In addition, an Environmental Monitoring Probe (EMP) can be attached to obtain humidity, temperature, smoke alarm, and security information.
- Relay Interface Card - has isolated dry contact (Form-C) relay outputs for UPS status: Utility failure, Low battery, UPS alarm/OK, or On bypass.

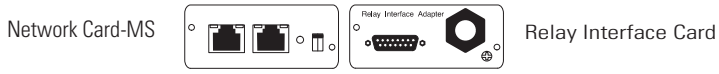

Figure 20. Optional Connectivity Cards

See Figure 18 on page 41 for the location of the communication bay.

Remote Emergency Power-off

REPO is used to shut down the UPS from a distance. This feature can be used for shutting down the load and the UPS by thermal relay, for instance in the event of room overtemperature. When REPO is activated, the UPS shuts down the output and all its power converters immediately. The UPS remains on to alarm the fault.

Table 7 provides REPO connections.

Table 7. REPO Connections

Wire Function		Terminal Wire Size Rating	Suggested Wire Size
REPO	L1	4–0.32 mm^2 (12–22 AWG)	0.82 mm^2 (18 AWG)
	L2		

WARNING

The REPO circuit is an IEC 60950 safety extra low voltage (SELV) circuit. This circuit must be separated from any hazardous voltage circuits by reinforced insulation.

CAUTION

- The REPO must not be connected to any utility connected circuits. Reinforced insulation to the utility is required. The REPO switch must have a minimum rating of 24 Vdc and 20 mA and be a dedicated latching-type switch not tied into any other circuit. The REPO signal must remain active for at least 250 ms for proper operation.
- To ensure the UPS stops supplying power to the load during any mode of operation, the input power must be disconnected from the UPS when the emergency power-off function is activated.

NOTE 1 For Europe, the emergency switch requirements are detailed in Harmonized document HD-384-48 S1, "Electrical Installation of the Buildings, Part 4: Protection for Safety, Chapter 46: Isolation and Switching."

NOTE 2 Leave the REPO connector installed in the REPO port on the UPS even if the REPO function is not needed.

See Figure 18 on page 41 for the REPO location. Figure 21 shows a schematic of the REPO connector contacts.

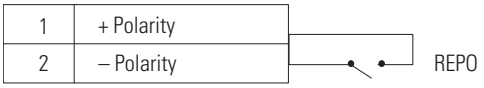

Figure 21. REPO Connector Contacts

You can set the REPO polarity. See the "REPO Input Polarity" setting in "User Settings" on page 31.

Depending on user configuration, the pins must be shorted or open to keep the UPS running. To restart the UPS, reconnect (re-open) the REPO connector pins and turn on the UPS manually. Maximum resistance in the shorted loop is 10 ohm.

Forced to Bypass State

In the "Force to Bypass" state, the UPS transfers to Bypass model in every condition except frequency converter and generator mode.

The following models have the REPO port configured for "Force to Bypass" function:

Rack Models

- PW9130G1000R-XL2UAU
- PW9130G1500R-XL2UAU
- PW9130G2000R-XL2UAU
- PW9130G3000R-XL2UAU

Tower Models

- PW9130G700T-XLAU
- PW9130G1000T-XLAU
- PW9130G1500T-XLAU
- PW9130G2000T-XLAU
- PW9130G3000T-XLAU.

IMPORTANT

Always test the REPO function before applying your critical load to avoid accidental load loss.

Relay Output Contacts

The UPS incorporates three programmable relay outputs with potential free contacts for remote alarm indications: a standard relay port and two outputs in the RS-232 communication port. See Figure 18 on page 41 for the locations of the ports. An additional four relay outputs can be obtained with the compatible Relay Interface Card.

Configure the relay outputs with the "Relay Configuration" setting in "User Settings" on page 31.

WARNING

The relay output contacts must not be connected to any utility connected circuits. Reinforced insulation to the utility is required. The relay output contacts have a maximum rating of 30 Vac/1A and 60 Vdc/2A nominal values.

Table 8 shows the options for the relay output contacts.

Table 8. Relay Output Configuration Options

Signal	Description
UPS ok	Activated when the UPS is feeding the load on inverter or on bypass and no alarms are active
On Bypass	Activated when the UPS is NOT on bypass operation
On Battery	Activated when the UPS operates on battery and the "On Battery Notice Delay" time has expired
Battery Low	Activated with the "Battery Low" alarm according to the "Battery Low Alarm" setting
Ext. Charger On	Controls an optional external battery charger on and off

Figure 22 shows a schematic of the relay output contacts.

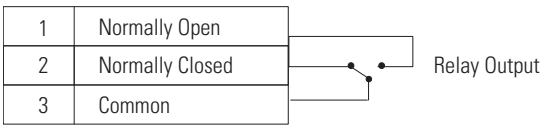

Figure 22. Standard Relay Port Connections

Programmable Signal Inputs

The UPS incorporates four programmable signal inputs: one RS-232 input, two connectivity card inputs, and one REPO terminal input. See Figure 18 on page 41 for the locations of the ports. Configure the inputs with the "Signal Inputs" setting in "User Settings" on page 31.

Table 9 shows the programmable settings for the signal inputs. Table 10 shows the operation logic for the signal inputs.

Table 9. Programmable Signal Inputs

Signal	Description
Not Used	The input operates only as a serial input (RxD) or has no function.
Force Bypass	If active, the UPS is forced to static bypass operation regardless of the bypass status.
Remote Shutdown	If active, the UPS output turns off after a user-defined remote shutdown delay. The batteries continue charging. Inactive input does not abort the shutdown countdown and does not cause the UPS to start up automatically.
Delayed Shutdown (and restart)	If active, the UPS output turns off after a user-defined delayed shutdown delay. The batteries continue charging. Inactive input does not abort the shutdown countdown but will cause the UPS to start up automatically if the input voltage exists.
On Generator	If active, synchronization is disabled and the UPS transfers to bypass.
Building Alarm 1	If active, the UPS generates the "Building Alarm 1" alarm.

Table 10. Polarity Options

Input	Description
High	Active state on high voltage (+Udc) level
Low	Active state on low voltage (GND or -Udc) level

Power Management and Protection Software

Eaton provides several comprehensive power monitoring/management software products and UPS load protection software products. Visit www.eaton.com/pq/software for the latest updates, as well as any new power monitoring/management and protection software products.

Chapter 6 Maintenance

This section explains how to:

- Care for the UPS and batteries
- Replace the UPS internal batteries and Extended Battery Modules (EBMs)
- Test new batteries
- Recycle used batteries or UPS
- Update the UPS firmware

UPS and Battery Care

For the best preventive maintenance, keep the area around the UPS clean and dust-free. If the atmosphere is very dusty, clean the outside of the system with a vacuum cleaner.

For full battery life, keep the UPS at an ambient temperature of 25°C (77°F).

NOTE If the UPS requires any type of transportation, verify that the UPS is unplugged and turned off and then disconnect the UPS internal battery connector (see Figure 24 on page 49 for rackmount models or Figure 26 on page 51 for tower models).

NOTE The batteries in the UPS are rated for a 3–5 year service life. The length of service life varies, depending on the frequency of usage and ambient temperature. Batteries used beyond expected service life will often have severely reduced runtimes. Replace batteries at least every five years to keep units running at peak efficiency.

Storing the UPS and Batteries

If you store the UPS for a long period, recharge the battery every six months by connecting the UPS to utility power. The internal batteries charge to 90% capacity in less than three hours. However, Eaton recommends that the batteries charge for 48 hours after long-term storage. If optional EBMs are installed, see the recharge times listed in Table 30 on page 72.

Check the battery recharge date on the shipping carton label. If the date has passed and the batteries were never recharged, do not use the UPS. Contact your service representative.

When to Replace Batteries

When the indicator illuminates, the audible alarm beeps, and the "Battery Needs Service" alarm displays, the batteries may need replacing. Contact your service representative to order new batteries.

Replacing Batteries

NOTE DO NOT DISCONNECT the batteries while the UPS is in Battery mode.

Batteries can be replaced easily without turning the UPS off or disconnecting the load.

If you prefer to remove input power to change the batteries, see "UPS Shutdown" on page 36.

Consider all warnings, cautions, and notes before replacing batteries.

WARNING

- Servicing should be performed by qualified service personnel knowledgeable of batteries and required precautions. Keep unauthorized personnel away from batteries.
- Batteries can present a risk of electrical shock or burn from high short circuit current. Observe the following precautions: 1) Remove watches, rings, or other metal objects; 2) Use tools with insulated handles; 3) Do not lay tools or metal parts on top of batteries, 4) Wear rubber gloves and boots.
- When replacing batteries, replace with the same type and number of batteries or battery packs. Contact your service representative to order new batteries.
- Proper disposal of batteries is required. Refer to your local codes for disposal requirements.
- Never dispose of batteries in a fire. Batteries may explode when exposed to flame.
- Do not open or mutilate the battery or batteries. Released electrolyte is harmful to the skin and eyes and may be extremely toxic.
- Determine if the battery is inadvertently grounded. If inadvertently grounded, remove source from ground. Contact with any part of a grounded battery can result in electrical shock. The likelihood of such shock can be reduced if such grounds are removed during installation and maintenance (applicable to equipment and remote battery supplies not having a grounded supply circuit).
- ELECTRIC ENERGY HAZARD. Do not attempt to alter any battery wiring or connectors. Attempting to alter wiring can cause injury.
- Disconnect charging source prior to connecting or disconnecting battery terminals.

Replacing Rackmount UPS Internal Batteries

CAUTION

The UPS internal batteries are heavy (see page 59). Use caution when handling the heavy batteries.

The internal batteries are located behind the UPS right front cover (behind the LCD control panel). The internal batteries are packaged together as one unit for easier handling.

To replace the batteries in the UPS:

1. Remove the UPS right front cover (see Figure 23).

   To remove the cover, remove and retain the two screws on the right side of the cover. Grasp the top and bottom of the cover and slide the cover to the **right**.

NOTE A ribbon cable connects the LCD control panel to the UPS. Do not pull on the cable or disconnect it.

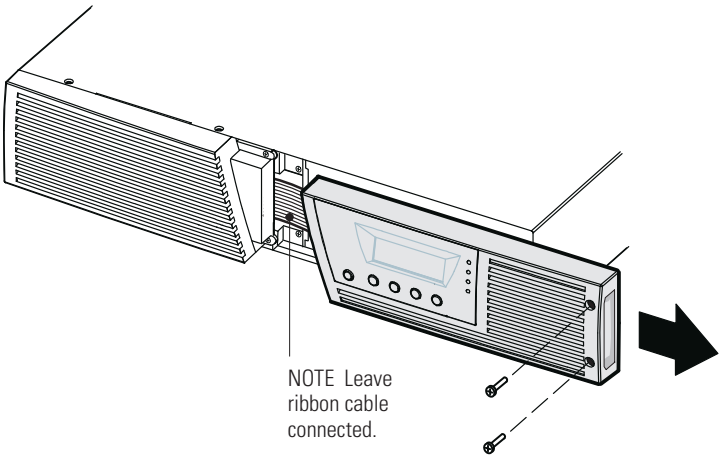

Figure 23. Removing the UPS Right Front Cover

2. Disconnect the internal battery connector (see Figure 24).
3. **Up to 1500 VA models only.** If the EBM cable is not connected to an EBM, unclip the EBM cable and move it to the left out of the way (see Figure 24).

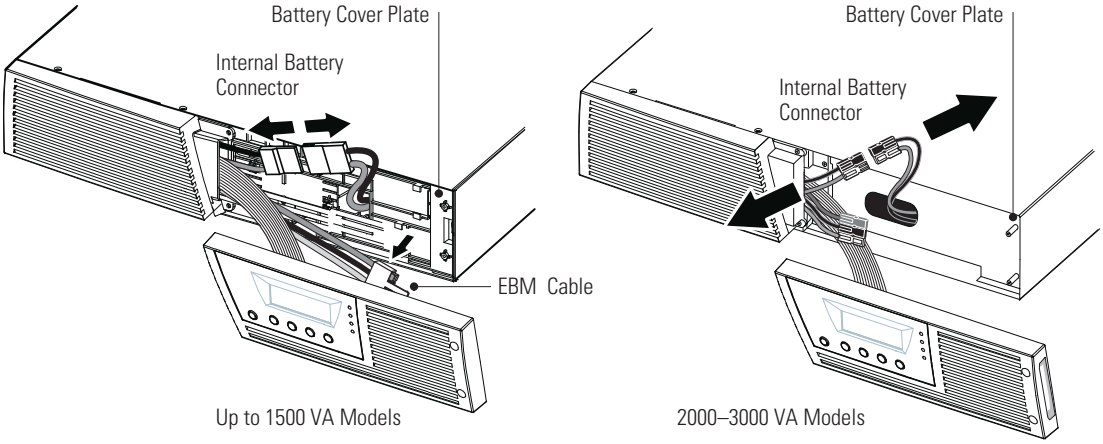

Figure 24. Disconnecting the UPS Internal Batteries (Shown without EBMs)

4. Grasp an edge of the battery cover plate and pull it forward gently. Remove and retain the battery cover plate. See Figure 24 for the location of the battery cover plate.
5. Carefully pull the handle on the battery tray and slide the battery package slowly out onto a flat, stable surface; use two hands to support the battery package. See "Recycling the Used Battery or UPS" on page 55 for proper disposal.

NOTE Verify that the replacement batteries have the same rating as the batteries being replaced.

6. Slide the new battery package into the cabinet. Push the battery package in firmly.
7. Replace the battery cover plate onto the screw mounts, threading the battery connector through the access slot.

CAUTION

A small amount of arcing may occur when connecting the internal batteries. This is normal and will not harm personnel. Connect the cables quickly and firmly.

8. Reconnect the internal battery connector. Connect red to red, and black to black. Press the two parts tightly together to ensure a proper connection.
9. **Up to 1500 VA models only.** If the EBM cable is not connected to an EBM, clip the EBM cable back into its holder on the battery cover plate. See Figure 24.
10. Replace the UPS right front cover.

    To replace the cover, verify that the ribbon cable is protected and (if EBMs are installed) the EBM cable is routed through the knockout on the bottom of the cover. Slide the cover to the left until it aligns with the left front cover. Reinstall the two screws on the right side of the right front cover.
11. Continue to "Testing New Batteries" on page 55.

Replacing Tower UPS Internal Batteries

CAUTION

The UPS internal batteries are heavy (see page 60). Use caution when handling the heavy batteries.

The internal batteries are located behind the UPS front cover. The internal batteries are packaged together as one unit for easier handling.

To replace the batteries in the UPS:

1. Remove the UPS front cover (see Figure 25).

   To remove the cover, push down on the top of the cover and pull the cover toward you to unclip it from the cabinet.

NOTE A ribbon cable connects the LCD control panel to the UPS. Do not pull on the cable or disconnect it.

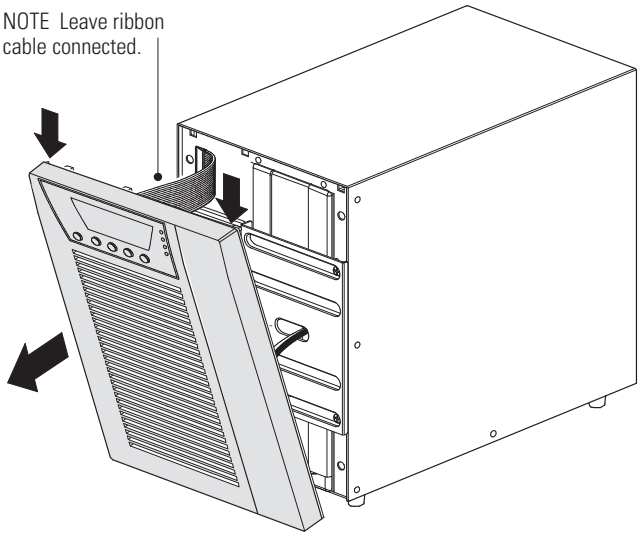

Figure 25. Removing the UPS Front Cover

2. Remove and retain the two screws holding the internal battery connector. Disconnect the internal battery connector. See Figure 26.

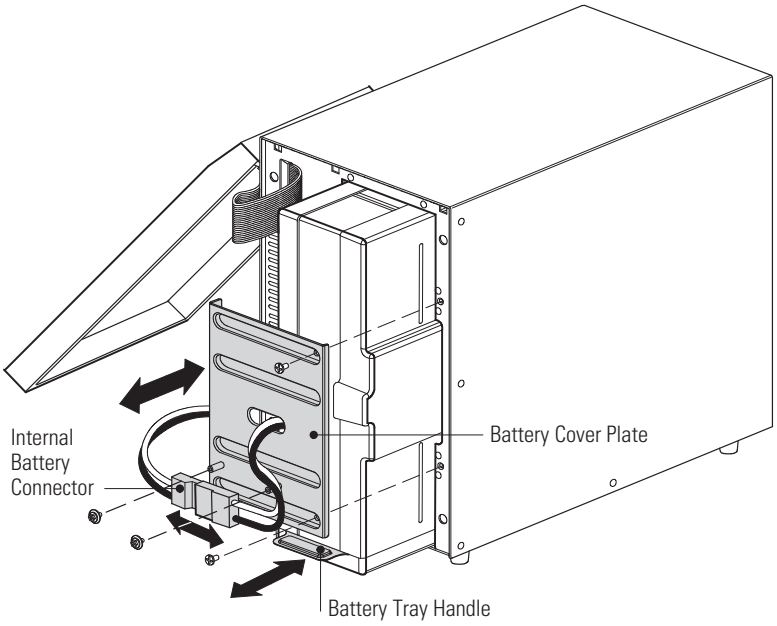

Figure 26. Replacing the UPS Internal Batteries

3. Remove and retain the two screws holding the battery cover plate. Grasp an edge of the battery cover plate and pull it forward gently. Remove and retain the battery cover plate.
4. Carefully pull the handle on the battery tray and slide the battery package slowly out onto a flat, stable surface; use two hands to support the battery package. See "Recycling the Used Battery or UPS" on page 55 for proper disposal.

NOTE Verify that the replacement batteries have the same rating as the batteries being replaced

5. Slide the new battery package into the cabinet. Push the battery package in firmly.
6. Replace the battery cover plate into the slots at left, threading the battery connector through the access slot. Reinstall the retained screws.

CAUTION

A small amount of arcing may occur when connecting the internal batteries. This is normal and will not harm personnel. Connect the cables quickly and firmly.

7. Reconnect the internal battery connector. Connect red to red, and black to black. Press the two parts tightly together to ensure a proper connection.
8. Place the connector between the screw mounts and reinstall the retained screws.
9. Replace the UPS front cover.

   To replace the cover, verify that the ribbon cable is protected, then insert the clips on the back of the cover into the cabinet and push firmly to snap the cover into place.
10. Continue to "Testing New Batteries" on page 55.

Replacing Rackmount EBMs

CAUTION

The EBM is heavy (see page 59). Lifting the cabinet into the rack requires a minimum of two people.

To replace the EBMs:

1. Remove the front cover of each EBM. See Figure 27.

   To remove the cover, remove and retain the two screws on the right side of the cover. Grasp the sides of the cover and slide the cover to the **left** and then away from the cabinet.

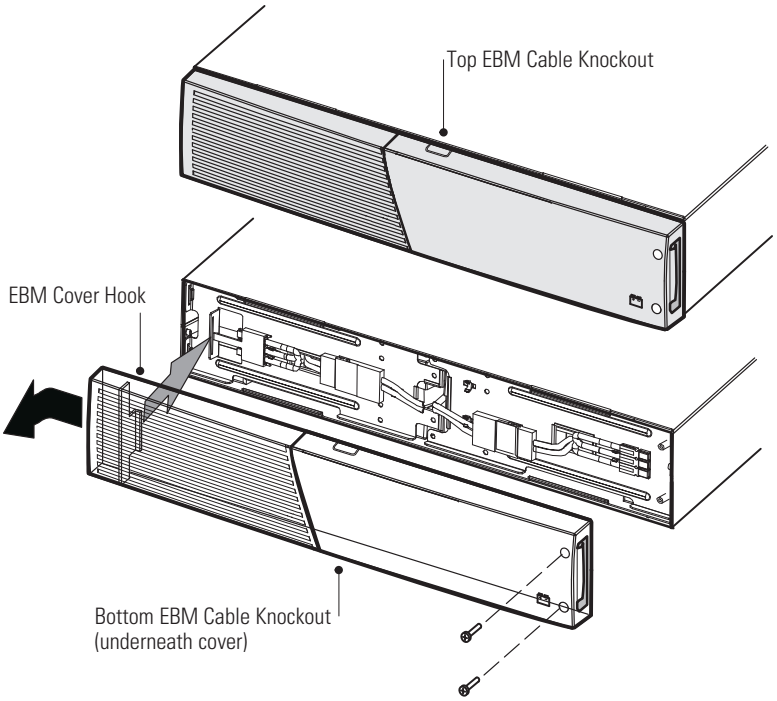

Figure 27. Removing the EBM Front Cover

2. Unplug the EBM cable from the UPS.

   If additional EBMs are installed, unplug the EBM cable from the battery connector on each EBM.

3. If not already installed, install the supplied mounting brackets on the new EBM(s).
4. Replace the EBM(s). See "Recycling the Used Battery or UPS" on page 55 for proper disposal.
5. Remove the front cover of each new EBM. See Figure 27.

   To remove the cover, remove and retain the two screws on the right side of the cover. Grasp the sides of the cover and slide the cover to the **left** and then away from the cabinet.

6. For the bottom (or only) EBM, remove the EBM cable knockout on the top of the cover. See Figure 27 for the location of the top EBM cable knockout.
7. If you are installing more than one new EBM, for each additional EBM remove the EBM cable knockout on the top **and** bottom of the EBM front cover. See Figure 27 for the location of the EBM cable knockouts.

8. Plug the new EBM(s) into the UPS. For reference, see page 24.

   Up to 1500 VA models. Connect the EBM connector from the UPS to the EBM connector on the EBM. Press the two parts tightly together to ensure a proper connection.

   2000–3000 VA models. Connect the EBM connector from the UPS to the EBM connector on the EBM. Connect red to red, black to black, and green to green. Press the two parts tightly together to ensure a proper connection.

   All models. To connect a second EBM, unclip the EBM connector on the first EBM and pull gently to extend the wiring to the EBM connector on the second EBM. Repeat for any additional EBMs.

9. Verify that the EBM connections are tight and that adequate bend radius and strain relief exist for each cable.

10. Replace the EBM front cover.

    To replace the cover, verify that the EBM cables are routed through the EBM cover knockouts, then slide the cover from the left to the right until it connects with the cover hook near the left side of the EBM cabinet. Reinstall the two screws on the right side of the front cover. For reference, see Figure 27 on page 53.

    Repeat for each additional EBM.

11. Verify that all wiring connecting the UPS and EBM(s) is installed behind the front covers and is inaccessible to users.

Replacing Tower EBMs

CAUTION

The EBM is heavy (see page 60). Lifting the cabinet requires a minimum of two people.

To replace the EBMs:

1. Unplug the EBM cable from the UPS.

   If additional EBMs are installed, unplug the EBM cable from the battery connector on each EBM.

2. Replace the EBM(s). See "Recycling the Used Battery or UPS" on page 55 for proper disposal.

3. For each replaced EBM, remove the cable retention clip covering the battery connector(s), as shown in Figure 16 on page 25. Retain the clips and screws.

CAUTION

A small amount of arcing may occur when connecting an EBM to the UPS. This is normal and will not harm personnel. Insert the EBM cable into the UPS battery connector quickly and firmly.

4. Plug the EBM cable(s) into the battery connector(s) as shown in Figure 16 on page 25. Up to four EBMs may be connected to the UPS.

5. For each cable retention clip removed, rotate the clip and install it under each EBM cable connection using the retained screws.

6. Verify that the EBM connections are tight and that adequate bend radius and strain relief exist for each cable.

Testing New Batteries

To test new batteries:

1. Plug the UPS into a power outlet for 48 hours to charge the batteries.
2. Press any button to activate the menu options.
3. Select CONTROL then START BATTERY TEST.

   The UPS starts a battery test if the batteries are fully charged, the UPS is in Normal mode with no active alarms, and the bypass voltage is acceptable.

   During the battery test, the UPS transfers to Battery mode and discharges the batteries for 25 seconds. The front panel displays “Battery test running” and the percentage of the test completed.

Recycling the Used Battery or UPS

Contact your local recycling or hazardous waste center for information on proper disposal of the used battery or UPS.

WARNING

- Do not dispose of the battery or batteries in a fire. Batteries may explode. Proper disposal of batteries is required. Refer to your local codes for disposal requirements.
- Do not open or mutilate the battery or batteries. Released electrolyte is harmful to the skin and eyes. It may be toxic.

CAUTION

Do not discard the UPS or the UPS batteries in the trash. This product contains sealed, lead–acid batteries and must be disposed of properly. For more information, contact your local recycling/reuse or hazardous waste center.

CAUTION

Do not discard waste electrical or electronic equipment (WEEE) in the trash. For proper disposal, contact your local recycling/reuse or hazardous waste center.

Updating the UPS Firmware

To keep the UPS firmware updated with the latest improvements and benefits, please contact your regional service team.

Chapter 7 Specifications

This chapter provides specifications for the Eaton 9130 UPS models:

- Communication options
- Model lists
- Weights and dimensions
- Electrical input and output
- Environmental and safety
- Battery

Table 11. Communication Options (All Models)

Communication Bay	(1) available independent communication bay for connectivity cards
Compatible Connectivity Cards	Network Card-MS Relay Interface Card
Communication Ports	RS-232 (DB9): 1200 9600 bps USB: 9600 bps
Signal Inputs	(4) programmable signal inputs (signal and signal return) for indicating building alarms or other use
Relay Output Contacts	(1) three-pole connector with (1) contact closure

Table 12. Extended Battery Module Model List

EBM Model	Configuration	Battery Voltage	For Power Ratings
PW9130N1000R-EBM2U	Rackmount	36 Vdc	700–1000 VA
PW9130N1000R-EBM2US		36 Vdc	700–1000 VA
PW9130N1500R-EBM2U		48 Vdc	1500 VA
PW9130N1500R-EBM2US		48 Vdc	1500 VA
PW9130N3000R-EBM2U		72 Vdc	2000–3000 VA
PW9130N3000R-EBM2US		72 Vdc	2000–3000 VA
EBM Model	**Configuration**	**Battery Voltage**	**For Power Ratings**
PW9130N1000T-EBM	Tower	36 Vdc	1000 VA
PW9130N1500T-EBM		48 Vdc	1500 VA
PW9130N3000T-EBM		96 Vdc	2000–3000 VA

Table 13. UPS Model List (Rackmount Models)

Model	Power Level	Rear Panel Diagram
PW9130L700R-XL2U	700 VA / 630W	Figure 28 on page 73
PW9130L700R-XL2US	700 VA / 630W	Figure 28 on page 73
PW9130L1000R-XL2U	1000 VA / 900W	Figure 28 on page 73
PW9130L1500R-XL2U	1500 VA / 1350W	Figure 33 on page 75
PW9130L1500R-XL2US	1500 VA / 1350W	Figure 33 on page 75
PW9130L2000R-XL2U	2000 VA / 1800W	Figure 35 on page 75
PW9130L2000R-XL2US	2000 VA / 1800W	Figure 35 on page 75
PW9130L2500R-XL2U	2500 VA / 2250W	Figure 39 on page 77
PW9130L3000R-XL2U	3000 VA / 2700W	Figure 39 on page 77

Table 13. UPS Model List (Rackmount Models) (Continued)

Model	Power Level	Rear Panel Diagram
PW9130L3000R-XL2US	3000 VA / 2700W	Figure 39 on page 77
PW9130G1000R-XL2U	1000 VA / 900W	Figure 29 on page 73
PW9130G2000R-XL2U	2000 VA / 1800W	Figure 36 on page 76
PW9130G2500R-XL2U	2500 VA / 2250W	Figure 40 on page 77
PW9130G3000R-XL2U	3000 VA / 2700W	Figure 40 on page 77
PW9130i1000R-XL2U	1000 VA / 900W	Figure 30 on page 74
PW9130i1000R-XL2US	1000 VA / 900W	Figure 30 on page 74
PW9130i1500R-XL2U	1500 VA / 1350W	Figure 34 on page 75
PW9130i1500R-XL2US	1500 VA / 1350W	Figure 34 on page 75
PW9130i2000R-XL2U	2000 VA / 1800W	Figure 37 on page 76
PW9130i3000R-XL2U	3000 VA / 2700W	Figure 41 on page 77
PW9130i3000R-XL2US	3000 VA / 2700W	Figure 41 on page 77
PW9130G1000R-XL2UEU	1000 VA / 900W	Figure 30 on page 74
PW9130G2000R-XL2UEU	2000 VA / 1800W	Figure 37 on page 76
PW9130G2500R-XL2UEU	2500 VA / 2250W	Figure 41 on page 77
PW9130G3000R-XL2UEU	3000 VA / 2700W	Figure 41 on page 77
PW9130G1000R-XL2UAU	1000 VA / 900W	Figure 31 on page 74
PW9130G1500R-XL2UAU	1500 VA / 1350W	Figure 32 on page 74
PW9130G2000R-XL2UAU	2000 VA / 1800W	Figure 38 on page 76
PW9130G3000R-XL2UAU	3000 VA / 2700W	Figure 42 on page 78

Table 14. UPS Model List (Tower Models)

Model	Power Level	Rear Panel Diagram
PW9130L700T-XL	700 VA / 630W	Figure 43 on page 78
PW9130L1000T-XL	1000 VA / 900W	Figure 45 on page 79
PW9130L1500T-XL	1500 VA / 1350W	Figure 44 on page 79
PW9130L2000T-XL	2000 VA / 1800W	Figure 46 on page 80
PW9130L3000T-XL	3000 VA / 2700W	Figure 47 on page 80
PW9130G1000T-XL	1000 VA / 900W	Figure 49 on page 81
PW9130G2000T-XL	2000 VA / 1800W	Figure 48 on page 81
PW9130G3000T-XL	3000 VA / 2700W	Figure 50 on page 82
PW9130i700T	700 VA / 630W	Figure 51 on page 82
PW9130i1000T-XL	1000 VA / 900W	Figure 53 on page 83
PW9130i1500T-XL	1500 VA / 1350W	Figure 52 on page 83
PW9130i2000T-XL	2000 VA / 1800W	Figure 54 on page 84
PW9130i3000T-XL	3000 VA / 2700W	Figure 55 on page 84
PW9130G1000T-XLEU	1000 VA / 900W	Figure 53 on page 83
PW9130G2000T-XLEU	2000 VA / 1800W	Figure 54 on page 84
PW9130G3000T-XLEU	3000 VA / 2700W	Figure 55 on page 84
PW9130G700T-XLAU	700 VA / 630W	Figure 57 on page 85
PW9130G1000T-XLAU	1000 VA / 900W	Figure 56 on page 85

Table 14. UPS Model List (Tower Models) (Continued)

Model	Power Level	Rear Panel Diagram
PW9130G1500T-XLAU	1500 VA / 1350W	Figure 58 on page 86
PW9130G2000T-XLAU	2000 VA / 1800W	Figure 59 on page 86
PW9130G3000T-XLAU	3000 VA / 2700W	Figure 60 on page 87

Table 15. Weights and Dimensions (Rackmount Models)

Model (Rackmount UPS)	Dimensions (HxWxD)	Weight
PW9130L700R-XL2U PW9130L700R-XL2US PW9130L1000R-XL2U PW9130G1000R-XL2U PW9130i1000R-XL2US PW9130i1000R-XL2U PW9130G1000R-XL2UEU PW9130G1000R-XL2UAU	86.5 x 438 x 430 mm (3.4" x 17.2" x 16.9")	16.0 kg (35.3 lb)
PW9130L1500R-XL2U PW9130L1500R-XL2US PW9130i1500R-XL2U PW9130i1500R-XL2US PW9130G1500R-XL2UAU	86.5 x 438 x 430 mm (3.4" x 17.2" x 16.9")	19.5 kg (43.0 lb)
PW9130L2000R-XL2U PW9130L2000R-XL2US PW9130G2000R-XL2U PW9130i2000R-XL2U PW9130G2000R-XL2UEU PW9130G2000R-XL2UAU	86.5 x 438 x 600 mm (3.4" x 17.2" x 23.6")	29.0 kg (63.9 lb)
PW9130L2500R-XL2U PW9130G2500R-XL2U PW9130G2500R-XL2UEU PW9130L3000R-XL2U PW9130L3000R-XL2US PW9130G3000R-XL2U PW9130i3000R-XL2U PW9130i3000R-XL2US PW9130G3000R-XL2UEU PW9130G3000R-XL2UAU	86.5 x 438 x 600 mm (3.4" x 17.2" x 23.6”)	29.5 kg (65.0 lb)
PW9130N1000R-EBM2U PW9130N1000R-EBM2US	86.5 x 438 x 430 mm (3.4" x 17.2" x 16.9")	22.1 kg (48.7 lb)
PW9130N1500R-EBM2U PW9130N1500R-EBM2US	86.5 x 438 x 430 mm (3.4" x 17.2" x 16.9")	28.1 kg (62.0 lb)
PW9130N3000R-EBM2U PW9130N3000R-EBM2US	86.5 x 438 x 600 mm (3.4" x 17.2" x 23.6")	41.0 kg (90.6 lb)

Table 16. Weights and Dimensions (Tower Models)

Model (Tower UPS)	Dimensions (HxWxD)	Weight
PW9130L700T-XL PW9130i700T PW9130G700T-XLAU	231* x 160 x 354 mm (9.09"* x 6.30" x 13.94")	12.2 kg (26.9 lb)
PW9130L1000T-XL PW9130G1000T-XL PW9130i1000T-XL PW9130G1000T-XLEU PW9130G1000T-XLAU	231* x 160 x 384 mm (9.09"* x 6.30" x 15.12")	14.5 kg (32.0 lb)
PW9130L1500T-XL PW9130i1500T-XL PW9130G1500T-XLAU	231* x 160 x 434 mm (9.09"* x 6.30" x 17.09")	19.0 kg (41.9 lb)
PW9130L2000T-XL PW9130G2000T-XL PW9130i2000T-XL PW9130G2000T-XLEU PW9130G2000T-XLAU PW9130L3000T-XL PW9130G3000T-XL PW9130i3000T-XL PW9130G3000T-XLEU PW9130G3000T-XLAU	325** x 214 x 412 mm (12.80"** x 8.43" x 16.22")	34.5 kg (76.1 lb)
Model (Tower EBM)	**Dimensions (HxWXD)**	**Weight**
PW9130N1000T-EBM	231* x 160 x 384 mm (9.09"* x 6.30" x 15.12")	18.5 kg (40.8 lb)
PW9130N1500T-EBM	231* x 160 x 434 mm (9.09"* x 6.30" x 17.09")	24.3 kg (53.6 lb)
PW9130N3000T-EBM	325** x 214 x 412 mm (12.80"** x 8.43" x 16.22")	50.0 kg (110.3 lb)

NOTE * 252 mm (9.92") with feet

NOTE ** 346 mm (13.62") with feet

Table 17. Electrical Input (All Models)

Nominal Frequency	50/60 Hz auto-sensing
Frequency Range	40 70 Hz before transfer to battery
Bypass Voltage Range	+10/-15% of nominal (default)
Noise Filtering	Metal oxide varistors (MOVs) for normal and common mode noise

Table 18. Electrical Input (Rackmount Models)

Model	Default Input (Voltage/Current)	Selectable Input Voltages	Voltage Range at 100% Load
PW9130L700R-XL2U	120V / 5.8A	100*, 110**, 120, 127	80–144 Vac
PW9130L700R-XL2US	120V / 5.8A	100*, 110**, 120, 127	80–144 Vac
PW9130L1000R-XL2U	120V / 8.3A	100*, 110**, 120, 127	80–144 Vac
PW9130L1500R-XL2U	120V / 12.5A	100*, 110**, 120, 127	80–144 Vac
PW9130L1500R-XL2US	120V / 12.5A	100*, 110**, 120, 127	80–144 Vac
PW9130L2000R-XL2U	120V / 16.7A	100*, 110**, 120, 127	90– 144Vac
PW9130L2000R-XL2US	120V / 16.7A	100*, 110**, 120, 127	90– 144 Vac
PW9130L2500R-XL2U	120V / 20.8A	100*, 110**, 120, 127	90–144 Vac
PW9130L3000R-XL2U	120V / 25A	100*, 110**, 120, 127	90–144 Vac
PW9130L3000R-XL2US	120V / 25A	100*, 110**, 120, 127	90–144Vac
PW9130G1000R-XL2U	208V / 4.8A	200*, 208**, 220, 230, 240	160–276 Vac
PW9130G2000R-XL2U	208V / 9.6A	200*, 208**, 220, 230, 240	180–276 Vac
PW9130G2500R-XL2U	208V / 12A	200*, 208**, 220, 230, 240	180–276 Vac
PW9130G3000R-XL2U	208V / 14.4A	200*, 208**, 220, 230, 240	180–276 Vac
PW9130i1000R-XL2U	230V / 4.3A	200*, 208**, 220, 230, 240	160–276 Vac
PW9130i1000R-XL2US	230V / 4.3A	200*, 208**, 220, 230, 240	160–276 Vac
PW9130i1500R-XL2U	230V / 6.5A	200*, 208**, 220, 230, 240	160–276 Vac
PW9130i1500R-XL2US	230V / 6.5A	200*, 208**, 220, 230, 240	160–276 Vac
PW9130i2000R-XL2U	230V / 8.7A	200*, 208**, 220, 230, 240	180–276 Vac
PW9130i3000R-XL2U	230V / 13.0A	200*, 208**, 220, 230, 240	180–276 Vac
PW9130i3000R-XL2US	230V / 13.0A	200*, 208**, 220, 230, 240	180–276 Vac
PW9130G1000R-XL2UEU	208V / 4.8A	200*, 208**, 220, 230, 240	180–276 Vac
PW9130G2000R-XL2UEU	208V / 9.6A	200*, 208**, 220, 230, 240	180–276 Vac
PW9130G2500R-XL2UEU	208V / 12A	200*, 208**, 220, 230, 240	180–276 Vac
PW9130G3000R-XL2UEU	208V / 14.4A	200*, 208**, 220, 230, 240	180–276 Vac
PW9130G1000R-XL2UAU	240V / 4.4A	200*, 208**, 220, 230, 240	160–276 Vac
PW9130G1500R-XL2UAU	240V / 6.25A	200*, 208**, 220, 230, 240	160–276 Vac
PW9130G2000R-XL2UAU	240V / 8.7A	200*, 208**, 220, 230, 240	180–276 Vac
PW9130G3000R-XL2UAU	240V / 13.0A	200*, 208**, 220, 230, 240	180–276 Vac

NOTE * 100V and 200V are derated by 20%.

NOTE ** 110V and 208V are derated by 10%.

Table 19. Electrical Input (Tower Models)

Model	Default Input (Voltage/Current)	Selectable Input Voltages	Voltage Range at 100% Load
PW9130L700T-XL	120V / 5.8A	100*, 110**, 120, 127	80–144 Vac
PW9130L1000T-XL	120V / 8.3A	100*, 110**, 120, 127	80–144 Vac
PW9130L1500T-XL	120V / 12.5A	100*, 110**, 120, 127	80–144 Vac
PW9130L2000T-XL	120V / 16.7A	100*, 110**, 120, 127	90–144 Vac
PW9130L3000T-XL	120V / 25.0A	100*, 110**, 120, 127	90–144 Vac
PW9130G1000T-XL	208V / 4.4A	200*, 208**, 220, 230, 240	160–276 Vac

Table 19. Electrical Input (Tower Models) (Continued)

Model	Default Input (Voltage/Current)	Selectable Input Voltages	Voltage Range at 100% Load
PW9130G2000T-XL	208V / 8.7A	200*, 208**, 220, 230, 240	180–276 Vac
PW9130G3000T-XL	208V / 13.0A	200*, 208**, 220, 230, 240	180–276 Vac
PW9130i700T	230V / 3.0A	200*, 208**, 220, 230, 240	160–276 Vac
PW9130i1000T-XL	230V / 4.3A	200*, 208**, 220, 230, 240	160–276 Vac
PW9130i1500T-XL	230V / 6.5A	200*, 208**, 220, 230, 240	160–276 Vac
PW9130i2000T-XL	230V / 8.7A	200*, 208**, 220, 230, 240	180–276 Vac
PW9130i3000T-XL	230V / 13.0A	200*, 208**, 220, 230, 240	180–276 Vac
PW9130G1000T-XLEU	208V / 4.4A	200*, 208**, 220, 230, 240	180–276 Vac
PW9130G2000T-XLEU	208V / 8.7A	200*, 208**, 220, 230, 240	180–276 Vac
PW9130G3000T-XLEU	208V / 13.0A	200*, 208**, 220, 230, 240	180–276 Vac
PW9130G700T-XLAU	240V / 4.2A	200*, 208**, 220, 230, 240	160–276 Vac
PW9130G1000T-XLAU	240V / 4.2A	200*, 208**, 220, 230, 240	160–276 Vac
PW9130G1500T-XLAU	240V / 6.25A	200*, 208**, 220, 230, 240	160–276 Vac
PW9130G2000T-XLAU	240V / 8.3A	200*, 208**, 220, 230, 240	180–276 Vac
PW9130G3000T-XLAU	240V / 12.5A	200*, 208**, 220, 230, 240	180–276 Vac

NOTE * 100V and 200V are derated by 20%.

NOTE ** 110V and 208V are derated by 10%.

Table 20. Electrical Input Connections (Rackmount Models)

Model	Input Connection	Input Cable
PW9130L700R-XL2U	5-15P	Attached line cord
PW9130L700R-XL2US	5-15P	Attached line cord
PW9130L1000R-XL2U	5-15P	Attached line cord
PW9130L1500R-XL2U	5-15P	Attached line cord
PW9130L1500R-XL2US	5-15P	Attached line cord
PW9130L2000R-XL2U	5-20P	Attached line cord
PW9130L2000R-XL2US	5-20P	Attached line cord
PW9130L2500R-XL2U	L5-30P	Attached line cord
PW9130L3000R-XL2U	L5-30P	Attached line cord
PW9130L3000R-XL2US	L5-30P	Attached line cord
PW9130G1000R-XL2U	IEC C14-10A	L6-20P to C14 coupler
PW9130G2000R-XL2U	IEC C14-10A	L6-20P to C14 coupler
PW9130G2500R-XL2U	IEC C20-16A	L6-20P to C20 coupler
PW9130G3000R-XL2U	IEC C20-16A	L6-20P to C20 coupler
PW9130i1000R-XL2U	IEC C14-10A	Schuko 10A to IEC 320-10A
PW9130i1000R-XL2US	IEC C14-10A	Schuko 10A to IEC 320-10A
PW9130i1500R-XL2U	IEC C14-10A	Schuko 10A to IEC 320-10A
PW9130i1500R-XL2US	IEC C14-10A	Schuko 10A to IEC 320-10A
PW9130i2000R-XL2U	IEC C14-10A	Schuko 10A to IEC 320-10A
PW9130i3000R-XL2U	IEC C20-16A	Schuko 16A to IEC 320-16A
PW9130i3000R-XL2US	IEC C20-16A	Schuko 16A to IEC 320-16A

Table 20. Electrical Input Connections (Rackmount Models) (Continued)

Model	Input Connection	Input Cable
PW9130G1000R-XL2UEU	IEC C14-10A	L6-20P to C14 coupler
PW9130G2000R-XL2UEU	IEC C14-10A	L6-20P to C14 coupler
PW9130G2500R-XL2UEU	IEC C20-16A	L6-20P to C20 coupler
PW9130G3000R-XL2UEU	IEC C20-16A	L6-20P to C20 coupler
PW9130G1000R-XL2UAU	IEC C14-10A	Aust. 10A to IEC 320-10A
PW9130G1500R-XL2UAU	IEC C14-10A	Aust. 10A to IEC 320-10A
PW9130G2000R-XL2UAU	IEC C14-10A	Aust. 10A to IEC 320-10A
PW9130G3000R-XL2UAU	IEC C20-16A	Aust. 15A to IEC 320-16A

Table 21. Electrical Input Connections (Tower Models)

Model	Input Connection	Input Cable
PW9130L700T-XL	5-15P	Attached line cord
PW9130L1000T-XL	5-15P	Attached line cord
PW9130L1500T-XL	5-15P	Attached line cord
PW9130L2000T-XL	5-20P	Attached line cord
PW9130L3000T-XL	L5-30P	Attached line cord
PW9130G1000T-XL	IEC C14-10A	L6-20P to C14 coupler
PW9130G2000T-XL	IEC C14-10A	L6-20P to C14 coupler
PW9130G3000T-XL	IEC C20-16A	L6-20P to C20 coupler
PW9130i700T	IEC C14-10A	Schuko 10A to IEC 320-10A
PW9130i1000T-XL	IEC C14-10A	Schuko 10A to IEC 320-10A
PW9130i1500T-XL	IEC C14-10A	Schuko 10A to IEC 320-10A
PW9130i2000T-XL	IEC C14-10A	Schuko 10A to IEC 320-10A
PW9130i3000T-XL	IEC C20-16A	Schuko 16A to IEC 320-16A
PW9130G1000T-XLEU	IEC C14-10A	L6-20P to C14 coupler
PW9130G2000T-XLEU	IEC C14-10A	L6-20P to C14 coupler
PW9130G3000T-XLEU	IEC C20-16A	L6-20P to C20 coupler
PW9130G700T-XLAU	IEC C14-10A	Aust. 10A to IEC 320-10A
PW9130G1000T-XLAU	IEC C14-10A	Aust. 10A to IEC 320-10A
PW9130G1500T-XLAU	IEC C14-10A	Aust. 10A to IEC 320-10A
PW9130G2000T-XLAU	IEC C14-10A	Aust. 10A to IEC 320-10A
PW9130G3000T-XLAU	IEC C20-16A	Aust. 15A to IEC 320-16A

Table 22. Electrical Output (All Models)

All Models	Normal Mode	Battery Mode
Voltage Regulation	±2%	Nominal output voltage ±3%
Efficiency	>94% High Efficiency mode for High Voltage Models >93% High Efficiency mode for Low Voltage Models	>79.5% (700 VA), >82% (1000 1500 VA), >84% (2000 3000 VA)
Frequency Regulation	Sync with line ±3 Hz of nominal line frequency (outside this range: ±0.1 Hz of auto-selected nominal frequency)	±0.1 Hz of auto-selected nominal frequency

Table 22. Electrical Output (All Models) (Continued)

All Models	Normal Mode	Battery Mode
Nominal Outputs	Low Voltage Models: 100/110/120/127V (voltage configurable or auto-sensing) 1000/1500/2000/3000 VA 0.9/1.35/1.8/ 2.7 kW	High Voltage Models: 200/208/220/230/240V (voltage configurable or auto-sensing) 1000/1500/2000/3000 VA 0.9/1.35/1.8/ 2.7 kW
Frequency	50 or 60 Hz, autosensing or configurable as a frequency converter	
Output Overload (Normal Mode)	100–102%: Activates Overload alarm. (Level 1) 102–129%: Load transfers to Bypass mode after 12 seconds. (Level 2) 130–49%: Load transfers to Bypass mode after 2 seconds. (Level 3) ≥150%: Load transfers to Bypass mode after 100 ms. (Level 4) Default configuration transfers immediately to Bypass at >102%.	
Output Overload (Bypass Mode)	100–109%: Activates Overload alarm. (Level 1) 110 –129%: UPS shuts down after 5 minutes. (Level 2) 130–149%: UPS shuts down after 15 seconds. (Level 3) ≥150%: UPS shuts down after 300 ms. (Level 4)	
Output Overload (Battery Mode)	100–102%: Activates Overload alarm. (Level 1) 102–129%: UPS shuts down after 12 seconds. (Level 2) 130–149%: UPS shuts down after 2 seconds. (Level 3) ≥150%: UPS shuts down after 100 ms. (Level 4)	
Voltage Waveform	Sine wave	
Harmonic Distortion	<3% THD on linear load; <5% THD on non-linear load	
Transfer Time	Online mode: 0 ms (no break) High Efficiency mode: 5 ms maximum (due to loss of utility)	
Power Factor	0.9	
Load Crest Factor	3 to 1	

Table 23. Electrical Output Connections (Rackmount Models)

Model	Output Connections	Output Cables
PW9130L700R-XL2U	(6) 5-15R	None
PW9130L700R-XL2US	(6) 5-15R	None
PW9130L1000R-XL2U	(6) 5-15R	None
PW9130L1500R-XL2U	(6) 5-15R	None
PW9130L1500R-XL2US	(6) 5-15R	None
PW9130L2000R-XL2U	(1) L5-20R, (6) 5-20T	None
PW9130L2000R-XL2US	(1) L5-20R, (6) 5-20T	None
PW9130L2500R-XL2U	(1) L5-30R, (6) 5-20T, (2) 20A AC breakers	None
PW9130L3000R-XL2U	(1) L5-30R, (6) 5-20T, (2) 20A AC breakers	None
PW9130L3000R-XL2US	(1) L5-30R, (6) 5-20T, (2) 20A AC breakers	None
PW9130G1000R-XL2U	(1) L6-20, (2) 6-20R	None

Table 23. Electrical Output Connections (Rackmount Models) (Continued)

Model	Output Connections	Output Cables
PW9130G2000R-XL2U	(1) L6-20, (4) 6-20R	None
PW9130G2500R-XL2U	(1) L6-30R, (1) L6-20R, (2) 6-20R	None
PW9130G3000R-XL2U	(1) L6-30R, (1) L6-20R, (2) 6-20R	None
PW9130i1000R-XL2U	(6) IEC 320-10A	(2) IEC-IEC 10A, (1) IEC 320-10A to Schuko 3-strip
PW9130i1000R-XL2US	(6) IEC 320-10A	(2) IEC-IEC 10A, (1) IEC 320-10A to Schuko 3-strip
PW9130i1500R-XL2U	(6) IEC 320-10A	(2) IEC-IEC 10A, (1) IEC 320-10A to Schuko 3-strip
PW9130i1500R-XL2US	(6) IEC 320-10A	(2) IEC-IEC 10A, (1) IEC 320-10A to Schuko 3-strip
PW9130i2000R-XL2U	(8) IEC 320-10A, (1) IEC 320-16A	(2) IEC-IEC 10A, (1) IEC 320-16A to Schuko 3-strip
PW9130i3000R-XL2U	(8) IEC 320-10A, (1) IEC 320-16A	(2) IEC-IEC 10A, (1) IEC 320-16A to Schuko 3-strip
PW9130i3000R-XL2US	(8) IEC 320-10A, (1) IEC 320-16A	(2) IEC-IEC 10A, (1) IEC 320-16A to Schuko 3-strip
PW9130G1000R-XL2UEU	(6) IEC 320-10A	None
PW9130G2000R-XL2UEU	(8) IEC 320-10A, (1) IEC 320-16A	None
PW9130G2500R-XL2UEU	(8) IEC 320-10A, (1) IEC 320-16A	None
PW9130G3000R-XL2UEU	(8) IEC 320-10A, (1) IEC 320-16A	None
PW9130G1000R-XL2UAU	(4) C13, (2) Aust 10A	(2) IEC-IEC 10A
PW9130G1500R-XL2UAU	(4) C13, (2) Aust 10A	(2) IEC-IEC 10A
PW9130G2000R-XL2UAU	(4) C13, (4) Aust 10A	(2) IEC-IEC 10A
PW9130G3000R-XL2UAU	(4) C13, (1) C19, (3) Aust 10A	(2) IEC-IEC 10A, (1) IEC-IEC 15A

Table 24. Electrical Output Connections (Tower Models)

Model	Output Connections	Output Cables
PW9130L700T-XL	(6) 5-15R	None
PW9130L1000T-XL	(6) 5-15R	None
PW9130L1500T-XL	(6) 5-15R	None
PW9130L2000T-XL	(1) L5-20R, (4) 5-20T	None
PW9130L3000T-XL	(1) L5-30R, (4) 5-20T, (2) 20A AC breakers	None
PW9130G1000T-XL	(1) L6-20, (2) 6-20R	None
PW9130G2000T-XL	(1) L6-20, (4) 6-20R	None
PW9130G3000T-XL	(1) L6-30R, (1) L6-20R, (2) 6-20R	None
PW9130i700T	(6) IEC 320-10A	(2) IEC-IEC 10A, (1) IEC 320-10A to Schuko 3-strip
PW9130i1000T-XL	(6) IEC 320-10A	(2) IEC-IEC 10A, (1) IEC 320-10A to Schuko 3-strip
PW9130i1500T-XL	(6) IEC 320-10A	(2) IEC-IEC 10A, (1) IEC 320-10A to Schuko 3-strip
PW9130i2000T-XL	(8) IEC 320-10A, (1) IEC 320-16A	(2) IEC-IEC 10A, (1) IEC 320-16A to Schuko 3-strip
PW9130i3000T-XL	(8) IEC 320-10A, (1) IEC 320-16A	(2) IEC-IEC 10A, (1) IEC 320-16A to Schuko 3-strip
PW9130G1000T-XLEU	(6) IEC 320-10A	None
PW9130G2000T-XLEU	(8) IEC 320-10A, (1) IEC 320-16A	None
PW9130G3000T-XLEU	(8) IEC 320-10A, (1) IEC 320-16A	None
PW9130G700T-XLAU	(4) Aust 10A	None
PW9130G1000T-XLAU	(4) Aust 10A	None

Table 24. Electrical Output Connections (Tower Models) (Continued)

Model	Output Connections	Output Cables
PW9130G1500T-XLAU	(4) Aust 10A	None
PW9130G2000T-XLAU	(1) C13, (5) Aust 10A	None
PW9130G3000T-XLAU	(1) C19, (5) Aust 15A	None

Table 25. Environmental and Safety (All Models)

	120 Vac Models	208/230/240 Vac Models
Surge Suppression	ANSI C62.41 Category B3 (6 KV Ring and Combination)	EN 61000-2-2 EN 61000-4-2, Level 3 EN 61000-4-3, Level 2 EN 61000-4-4, Level 2 (also on signal ports) EN 6100-4-5, Level 3 Criteria A EN 61000-4-6, Level 2 EN 61000-4-8, Level 2 EN 6100-4-11
EMC Certifications	≤1500 VA: FCC Class B, VCCI Class B, EN 55022 Class B ≥2000 VA: FCC Class A, VCCI Class A, EN 55022 Class A	CE per IEC/EN 62040-2, Emissions: Category C1, Immunity: Category C2
EMC (Emissions)	IEC 62040-2:ed2:2005 / EN 62040-2:2006	
Safety Conformance [1]	UL 1778, IEC 62040-1-1, IEC 60950-1	
Agency Markings [1, 2]	CE, UL, CUL, NOM	
Operating Temperature	0°C to 40°C (32°F to 104°F) in Online mode, with linear derating for altitude Thermal protection switches load to Bypass in case of overheating. If you wish to operate above these parameters, please contact your regional service team.	
Storage Temperature	-20°C to 40°C (-4°F to 104°F) with batteries -25°C to 55°C (-13°F to 131°F) without batteries	
Transit Temperature	-25°C to 55°C (-13°F to 131°F)	
Relative Humidity	5 90% noncondensing	
Operating Altitude	Up to 3,000 meters (9,843 ft) above sea level	
Transit Altitude	Up to 10,000 meters (32,808 ft) above sea level	
Audible Noise	<50 dBA at 1 meter typical	
Leakage Current	<1.5 mA	

NOTE [1] UL Safety Conformance does not apply to the 230/240 Vac models.

NOTE [2] UL , CUL, and NOM Agency Markings do not apply to the “i” or “G (AU)” models.

Table 26. Battery Runtimes (in Minutes) at 100% Load (Rack Models) PF0.9

Rack Models Load (VA/Watts)	Internal Batteries	+ 1 EBM	+ 2 EBMs	+ 3 EBMs	+ 4 EBMs
PW9130L700R-XL2U / PW9130L700R-XL2US					
700/630	10	42	77	113	161
525/473	16	61	108	170	211
350/315	29	106	167	248	325
175/158	52	207	344	479	548
PW9130L1000R-XL2U					
1000/900	6	32	55	84	109
750/675	10	44	81	115	161
500/450	19	69	111	191	258
250/225	32	130	274	364	498
PW9130G1000R-XL2U / PW9130G1000R-XL2UEU / PW9130i1000R-XL2U / PW9130i1000R-XL2US					
1000/900	6	32	51	82	100
750/675	9	43	80	108	158
500/450	19	68	111	193	246
250/225	30	124	272	368	483
PW9130L1500R-XL2U / PW9130L1500R-XL2US					
1500/1350	5	23	48	71	92
1125/1013	8	34	72	97	130
750/675	14	64	113	167	224
375/338	31	121	234	335	367
PW9130i1500R-XL2U / PW9130i1500R-XL2US					
1500/1350	6	25	46	69	90
1125/1013	8	32	69	96	126
750/675	14	62	112	172	222
375/338	29	115	218	335	374
PW9130L2000R-XL2U / PW9130L2000R-XL2US					
2000/1800	6	32	59	88	112
1500/1350	10	46	85	125	164
1000/900	18	70	136	190	254
500/450	41	157	271	396	526
PW9130G2000R-XL2U PW9130G2000R-XL2UEU / PW9130i2000R-XL2U					
2000/1800	6	33	59	88	119
1500/1350	9	47	83	130	161
1000/900	17	72	129	183	260
500/450	40	155	277	398	509
PW9130L2500R-XL2U					
2500/2250	6	22	42	64	89
1875/1688	9	30	62	89	129
1250/1125	14	48	89	142	192
625/563	28	110	211	295	390

Table 26. Battery Runtimes (in Minutes) at 100% Load (Rack Models) PF0.9 (Continued)

Rack Models					
Load (VA/Watts)	**Internal Batteries**	**+ 1 EBM**	**+ 2 EBMs**	**+ 3 EBMs**	**+ 4 EBMs**
PW9130G2500R-XL2U / PW9130G2500R-XL2UEU					
2500/2250	6	20	40	60	87
1875/1688	9	28	57	96	120
1250/1125	15	50	87	138	191
625/563	30	112	219	279	401
PW9130L3000R-XL2U / PW9130L3000R-XL2US					
3000/2700	3	20	37	53	71
2250/2025	5	27	54	80	106
1500/1350	10	49	89	123	164
750/675	28	105	183	264	358
PW9130G3000R-XL2U / PW9130G3000R-XL2UEU / PW9130i3000R-XL2U / PW9130i3000R-XL2US					
3000/2700	4	19	34	53	69
2250/2025	5	29	53	79	103
1500/1350	9	45	84	122	165
750/675	27	102	175	263	344

Table 27. Battery Runtimes (in Minutes) at 100% Load (Tower Models) PF0.9

Tower Models					
Load (VA/Watts)	**Internal Batteries**	**+ 1 EBM**	**+ 2 EBMs**	**+ 3 EBMs**	**+ 4 EBMs**
PW9130L700T-XL					
700/630	5	N/A	N/A	N/A	N/A
525/473	8	N/A	N/A	N/A	N/A
350/315	15	N/A	N/A	N/A	N/A
175/158	33	N/A	N/A	N/A	N/A
PW9130i700T					
700/630	5	N/A	N/A	N/A	N/A
525/473	8	N/A	N/A	N/A	N/A
350/315	14	N/A	N/A	N/A	N/A
175/158	31	N/A	N/A	N/A	N/A
PW9130L1000T-XL					
1000/900	6	32	55	84	109
750/675	10	44	81	115	161
500/450	19	69	111	191	258
250/225	32	130	274	364	498
PW9130G1000T-XL / PW9130G1000T-XLEU / PW9130i1000T-XL					
1000/900	6	32	51	82	100
750/675	9	43	80	108	158
500/450	19	68	111	193	246
250/225	30	124	272	368	483

Table 27. Battery Runtimes (in Minutes) at 100% Load (Tower Models) PF0.9 (Continued)

Tower Models					
Load (VA/Watts)	**Internal Batteries**	**+ 1 EBM**	**+ 2 EBMs**	**+ 3 EBMs**	**+ 4 EBMs**
PW9130L1500T-XL					
1500/1350	5	23	48	71	92
1125/1013	8	34	72	97	130
750/675	14	64	113	167	224
375/338	31	121	234	335	367
PW9130i1500T-XL					
1500/1350	6	25	46	69	90
1125/1013	8	32	69	96	126
750/675	14	62	112	172	222
375/338	29	115	218	335	374
PW9130L2000T-XL					
2000/1800	11	42	76	111	149
1500/1350	16	63	116	158	213
1000/900	26	99	169	243	344
500/450	55	169	333	486	625
PW9130G2000T-XL / PW9130G2000T-XLEU / PW9130i2000T-XL					
2000/1800	11	44	79	115	162
1500/1350	17	60	112	164	203
1000/900	28	96	168	258	336
500/450	55	169	336	490	608
PW9130L3000T-XL					
3000/2700	6	22	51	64	90
2250/2025	9	39	69	105	120
1500/1350	16	63	105	162	218
750/675	39	139	231	320	441
PW9130G3000T-XL / PW9130G3000T-XLEU / PW9130i3000T-XL					
3000/2700	6	21	52	66	94
2250/2025	9	38	67	102	128
1500/1350	16	60	100	169	215
750/675	40	139	226	311	444

NOTE Battery times are approximate and vary depending on the load configuration and battery charge.

Table 28. Battery Runtimes (in Minutes) at 100% Load (Rack Models) PF0.7

Rack Models					
Load (VA/Watts)	**Internal Batteries**	**+ 1 EBM**	**+ 2 EBMs**	**+ 3 EBMs**	**+ 4 EBMs**
PW9130L700R-XL2U / PW9130L700R-XL2US (Estimated runtimes)					
700/490	14	55	102	148	175
525/368	20	77	140	179	239
350/245	32	124	189	282	414
175/123	64	200	395	552	739

Table 28. Battery Runtimes (in Minutes) at 100% Load (Rack Models) PF0.7 (Continued)

Rack Models Load (VA/Watts)	Internal Batteries	+ 1 EBM	+ 2 EBMs	+ 3 EBMs	+ 4 EBMs
PW9130L1000R-XL2U					
1000/700	10	40	73	108	149
750/525	13	58	101	152	219
500/350	24	85	172	249	304
250/175	48	190	310	451	569
PW9130G1000R-XL2U / PW9130G1000R-XL2UEU / PW9130i1000R-XL2U / PW9130i1000R-XL2US					
1000/700	10	40	78	110	150
750/525	13	55	103	151	223
500/350	22	82	186	250	312
250/175	47	190	328	431	584
PW9130L1500R-XL2U / PW9130L1500R-XL2US					
1500/1050	7	34	63	88	135
1125/788	11	44	84	129	210
750/525	18	79	148	207	267
375/263	38	167	278	475	540
PW9130i1500R-XL2U / PW9130i1500R-XL2US					
1500/1050	7	32	61	98	128
1125/788	11	47	83	126	195
750/525	18	81	143	208	262
375/263	38	171	298	416	564
PW9130L2000R-XL2U / PW9130L2000R-XL2US					
2000/1400	9	45	6	124	163
1500/1050	14	66	115	165	225
1000/700	26	101	185	251	343
500/350	52	197	353	481	629
PW9130G2000R-XL2U / PW9130G2000R-XL2UEU / PW9130i2000R-XL2U					
2000/1400	10	46	83	118	163
1500/1050	13	64	118	170	221
1000/700	25	95	190	242	345
500/350	53	205	346	488	625
PW9130L2500R-XL2U (Estimated runtimes)					
2500/2250	7	31	59	87	119
1875/1688	10	43	81	121	154
1250/1125	17	65	120	163	203
625/563	40	145	228	363	491
PW9130G2500R-XL2U / PW9130G2500R-XL2UEU (Estimated runtimes)					
2500/2250	7	31	59	87	119
1875/1688	10	43	81	121	154
1250/1125	17	65	120	163	203
625/563	40	145	228	363	491

Table 28. Battery Runtimes (in Minutes) at 100% Load (Rack Models) PF0.7 (Continued)

Rack Models					
Load (VA/Watts)	**Internal Batteries**	**+ 1 EBM**	**+ 2 EBMs**	**+ 3 EBMs**	**+ 4 EBMs**
PW9130L3000R-XL2U / PW9130L3000R-XL2US					
3000/2100	5	25	48	72	100
2250/1575	8	37	72	102	137
1500/1050	13	60	100	165	223
750/525	34	138	228	326	438
PW9130G3000R-XL2U / PW9130G3000R-XL2UEU / PW9130i3000R-XL2U / PW9130i3000R-XL2US					
3000/2100	6	25	45	68	96
2250/1575	8	34	70	96	130
1500/1050	14	62	92	156	211
750/525	34	130	212	355	442

NOTE Battery times are approximate and vary depending on the load configuration and battery charge.

Table 29. Battery Runtimes (in Minutes) at 100% Load (Tower Models) PF0.7

Tower Models					
Load (VA/Watts)	**Internal Batteries**	**+ 1 EBM**	**+ 2 EBMs**	**+ 3 EBMs**	**+ 4 EBMs**
PW9130L700T-XL					
700/490	8	N/A	N/A	N/A	N/A
525/368	12	N/A	N/A	N/A	N/A
350/245	21	N/A	N/A	N/A	N/A
175/123	37	N/A	N/A	N/A	N/A
PW9130i700T					
700/490	8	N/A	N/A	N/A	N/A
525/368	12	N/A	N/A	N/A	N/A
350/245	19	N/A	N/A	N/A	N/A
175/123	35	N/A	N/A	N/A	N/A
PW9130L1000T-XL					
1000/700	10	40	73	108	149
750/525	13	58	101	152	219
500/350	24	85	172	249	304
250/175	48	190	310	451	569
PW9130G1000T-XL / PW9130G1000T-XLEU / PW9130i1000T-XL					
1000/700	10	40	78	110	150
750/525	13	55	103	151	223
500/350	22	82	186	250	312
250/175	47	190	328	431	584
PW9130L1500T-XL					
1500/1050	7	34	63	88	135
1125/788	11	44	84	129	210
750/525	18	79	148	207	267
375/263	38	167	278	475	540

Table 29. Battery Runtimes (in Minutes) at 100% Load (Tower Models) PF0.7 (Continued)

Tower Models Load (VA/Watts)	Internal Batteries	+ 1 EBM	+ 2 EBMs	+ 3 EBMs	+ 4 EBMs
PW9130i1500T-XL					
1500/1050	7	32	61	98	128
1125/788	11	47	83	126	195
750/525	18	81	143	208	262
375/263	38	171	298	416	564
PW9130L2000T-XL (Estimated runtimes)					
2000/1400	15	61	111	156	194
1500/1050	21	81	145	185	269
1000/700	34	129	198	293	410
500/350	72	225	449	590	766
PW9130G2000T-XL / PW9130G2000T-XLEU / PW9130i2000T-XL (Estimated runtimes)					
2000/1400	15	61	111	156	186
1500/1050	21	81	145	184	248
1000/700	34	129	198	293	431
500/350	72	225	449	590	840
PW9130L3000T-XL					
3000/2100	9	35	66	95	132
2250/1575	13	53	100	139	183
1500/1050	22	86	153	221	267
750/525	69	168	298	395	545
PW9130G3000T-XL / PW9130G3000T-XLEU / PW9130i3000T-XL (Estimated runtimes)					
3000/2100	9	36	68	101	137
2250/1575	12	49	90	134	165
1500/1050	20	79	143	180	240
750/525	46	161	267	434	547

NOTE Battery times are approximate and vary depending on the load configuration and battery charge.

Table 30. Battery

	Internal Batteries	EBMs
Rackmount Configuration	700 1000 VA models: 36 Vdc (3 12V, 9 Ah) 1500 VA models: 48 Vdc (4 12V, 9 Ah) 2000 3000 VA models: 72 Vdc (6 12V, 9 Ah)	PW9130N1000R-EBM2U: 36 Vdc (2 x 3 12V, 9 Ah) PW9130N1500R-EBM2U: 48 Vdc (2 x 4 12V, 9 Ah) PW9130N3000R-EBM2U: 72 Vdc (2 x 6 12V, 9 Ah)
Tower Configuration	700 VA models: 24 Vdc (2 12V, 9 Ah) 1000 VA models: 36 Vdc (3 12V, 9 Ah) 1500 VA models: 48 Vdc (4 12V, 9 Ah) 2000 3000 VA models: 96 Vdc (8 12V, 9 Ah)	PW9130N1000T-EBM: 36 Vdc (2 x 3 12V, 9 Ah) PW9130N1500T-EBM: 48 Vdc (2 x 4 12V, 9 Ah) PW9130N3000T-EBM: 96 Vdc (2 x 8 12V, 9 Ah)
Fuses	Not applicable	(4) 30A/125 Vdc fuses per EBM
Type	Sealed, maintenance-free, valve-regulated, lead-acid, with minimum 3-year float service life at 25°C (77°F)	

Table 30. Battery (Continued)

	Internal Batteries	EBMs
Monitoring	Advanced monitoring for earlier failure detection and warning	
Recharge Time (to 90%)	Internal batteries: 3 hours 1 EBM: 9 hours; 2 EBMs: 15 hours; 3 EBMs: 21 hours; 4 EBMs: 27 hours	
Battery Port	External three-pole Anderson connector on UPS for connection to EBM	

Rear Panels

This section shows each model's rear panel. Receptacles in Load Segment 1 are shaded.

Table 13 on page 57 lists the rackmount models. Table 14 on page 58 lists the tower models. Input and output components for each model are listed in Table 18 through Table 24 (pages 61 through 65).

For a description of communication features, see Figure 18 on page 41.

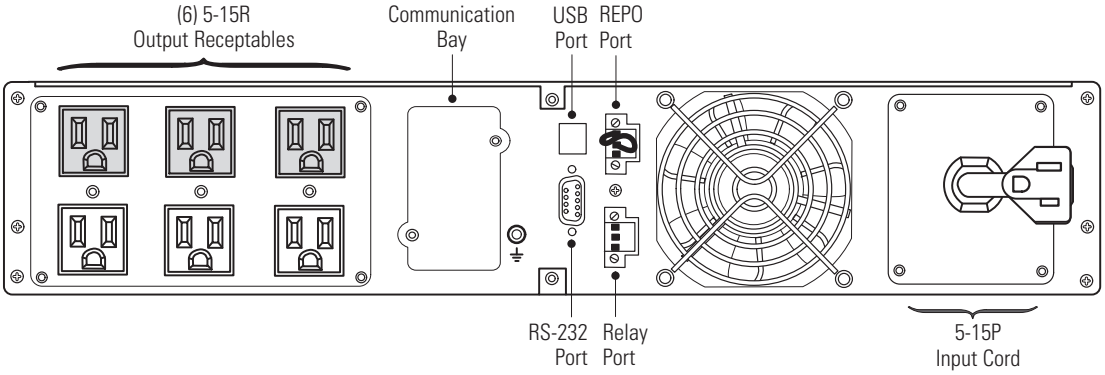

Figure 28. Models PW9130L700R-XL2U, PW9130L1000R-XL2U, PW9130L700R-XL2US

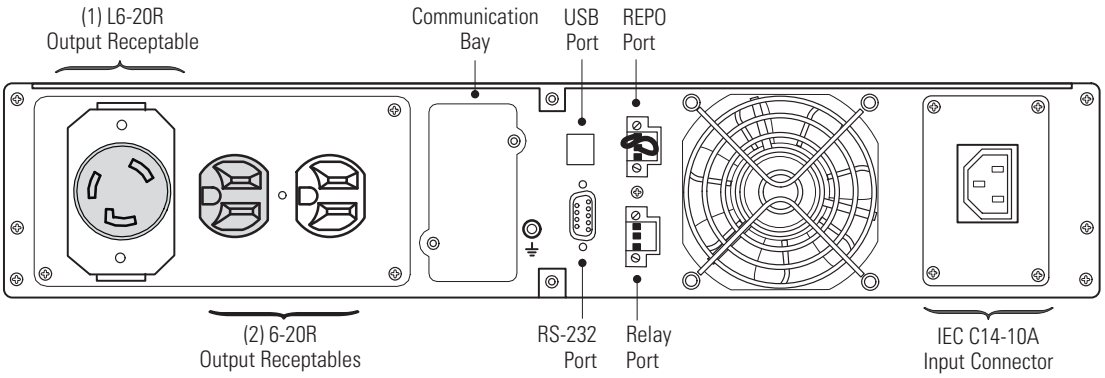

Figure 29. Model PW9130G1000R-XL2U

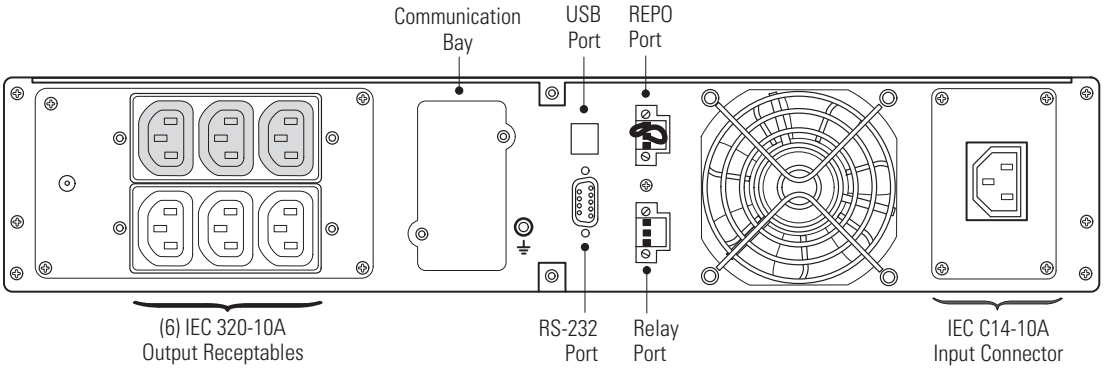

Figure 30. Models PW9130i1000R-XL2U, PW9130i1000R-XL2US, PW9130G1000R-XL2UEU

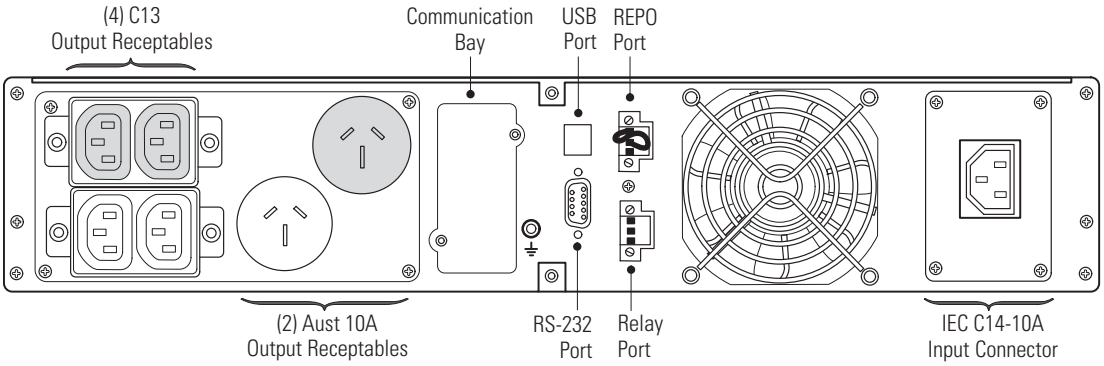

Figure 31. Model PW9130G1000R-XL2UAU

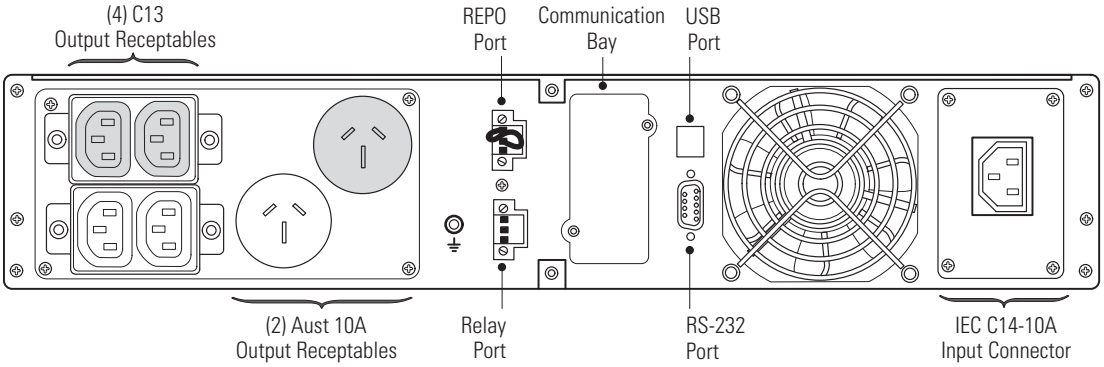

Figure 32. Model PW9130G1500R-XL2UAU

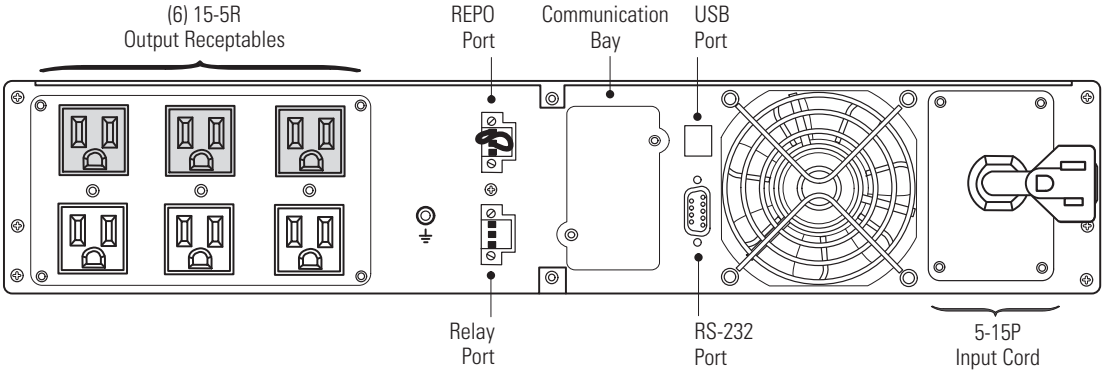

Figure 33. Model PW9130L1500R-XL2U, PW9130L1500R-XL2US

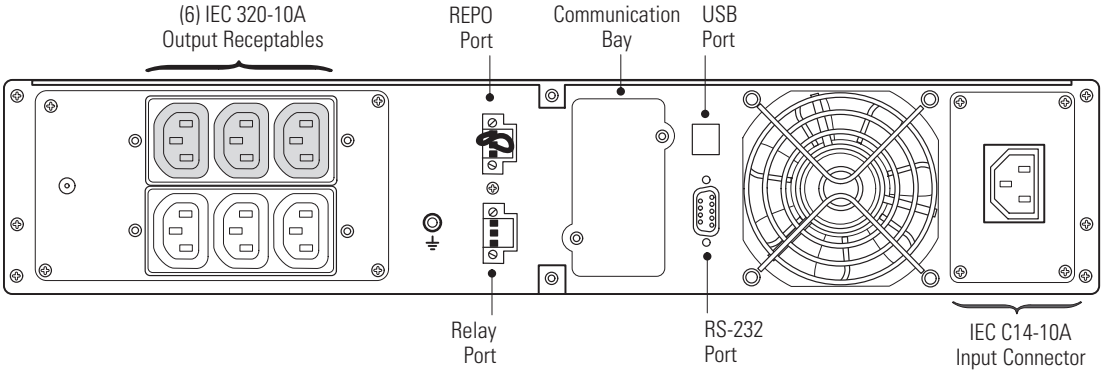

Figure 34. Model PW9130i1500R-XL2U, PW9130i1500R-XL2US

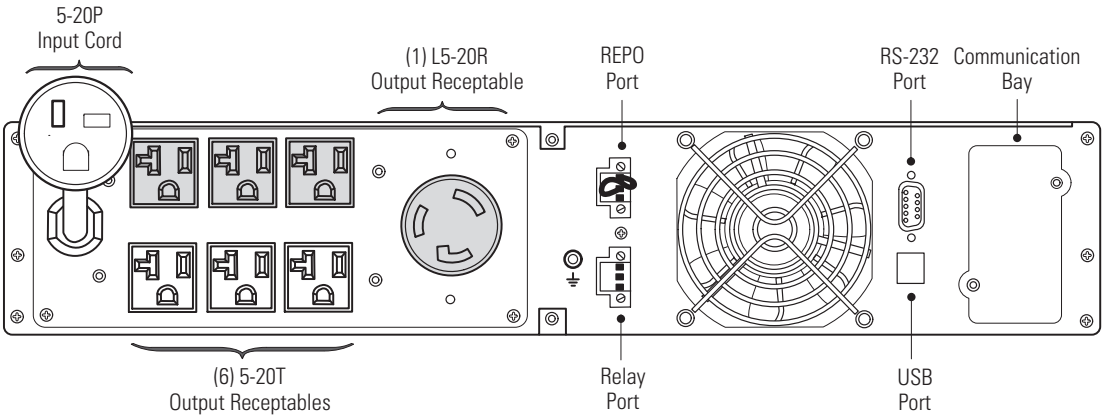

Figure 35. Model PW9130L2000R-XL2U, PW9130L2000R-XL2US

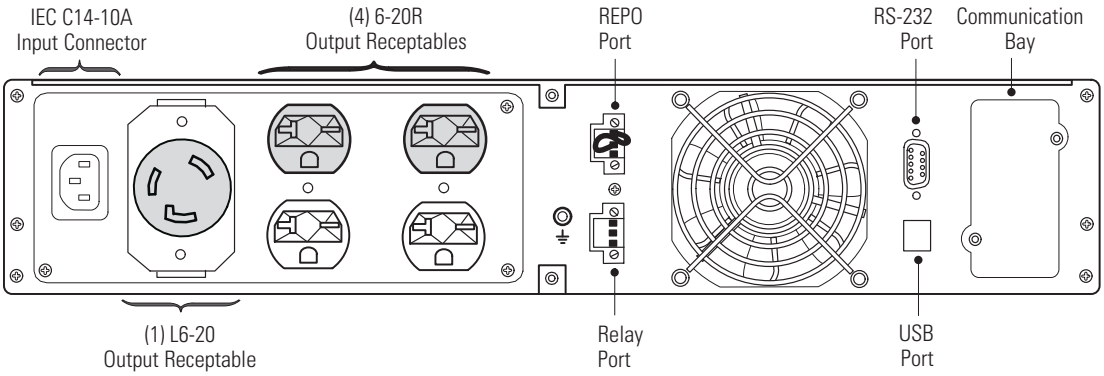

Figure 36. Model PW9130G2000R-XL2U

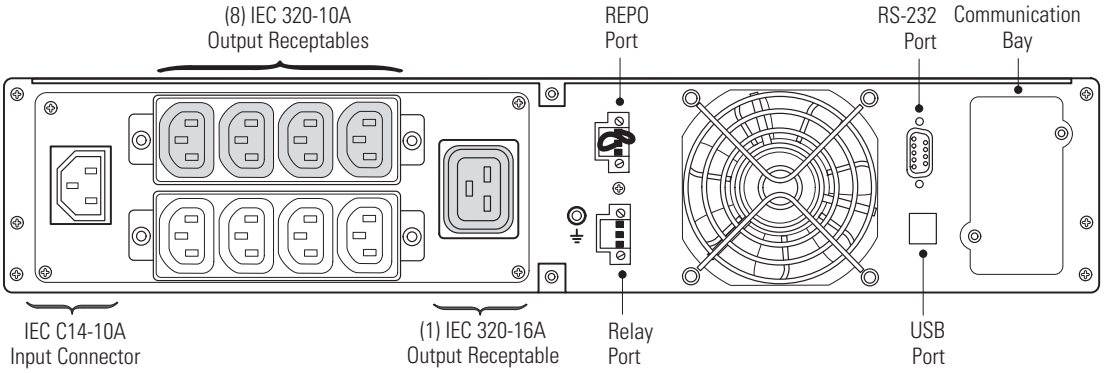

Figure 37. Models PW9130i2000R-XL2U, PW9130G2000R-XL2UEU

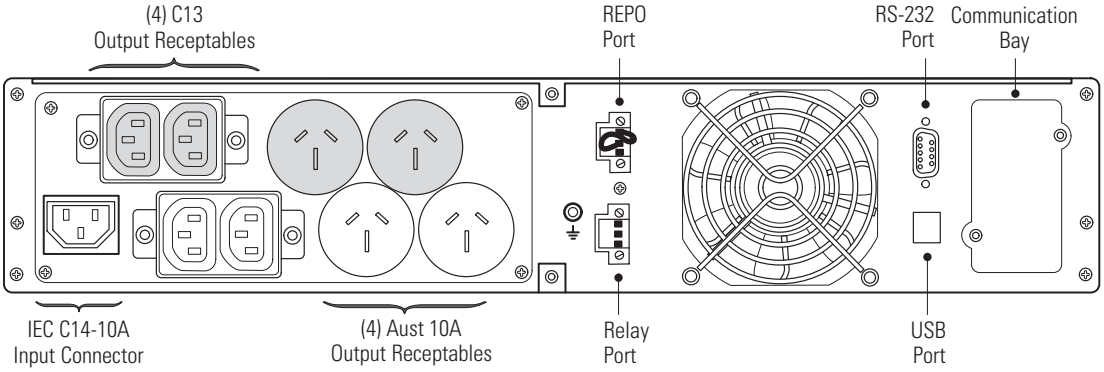

Figure 38. Model PW9130G2000R-XL2UAU

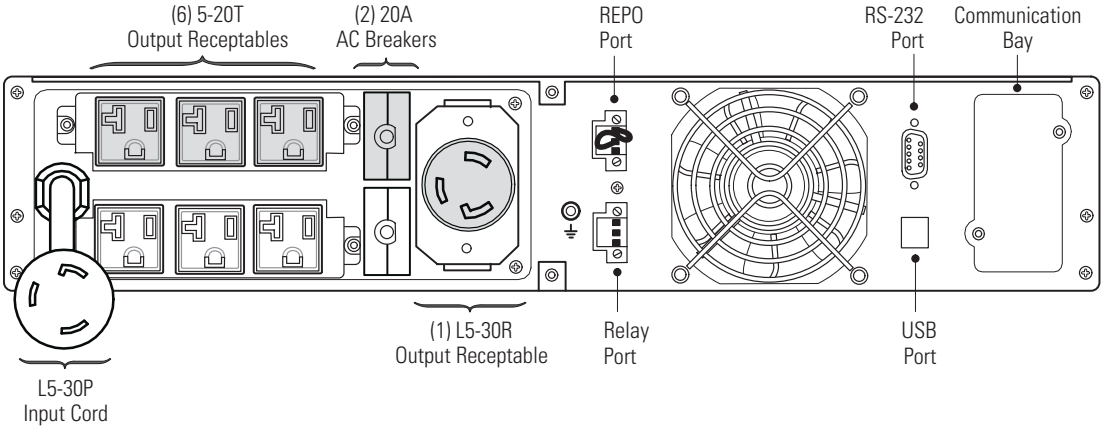

Figure 39. Models PW9130L2500R-XL2U, PW9130L3000R-XL2U, PW9130L3000R-XL2US

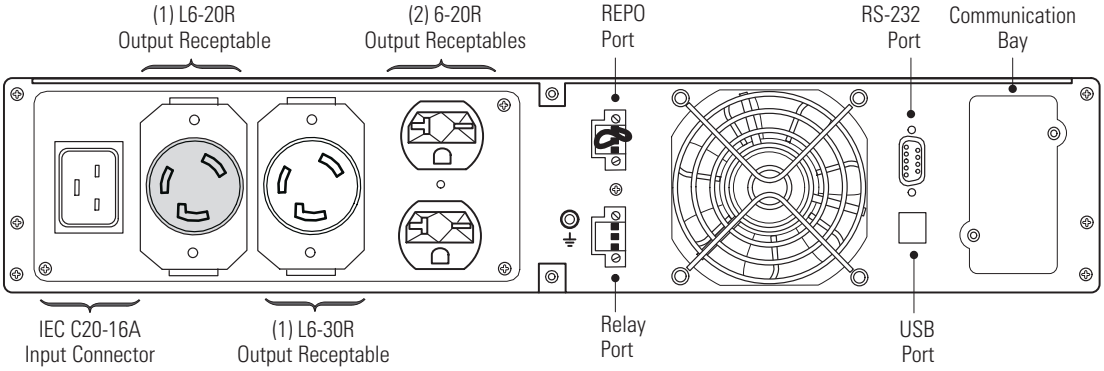

Figure 40. Models PW9130G2500R-XL2U, PW9130G3000R-XL2U

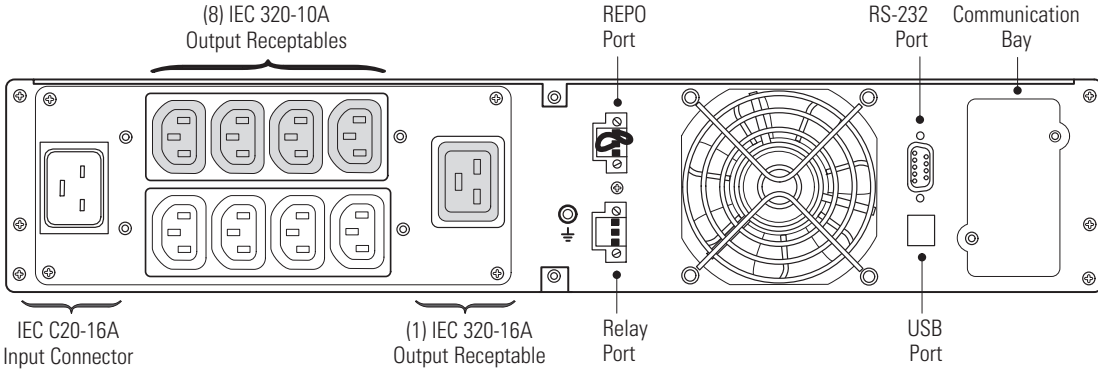

Figure 41. Models PW9130G2500R-XL2UEU, PW9130i3000R-XL2U, PW9130i3000R-XL2US PW9130G3000R-XL2UEU

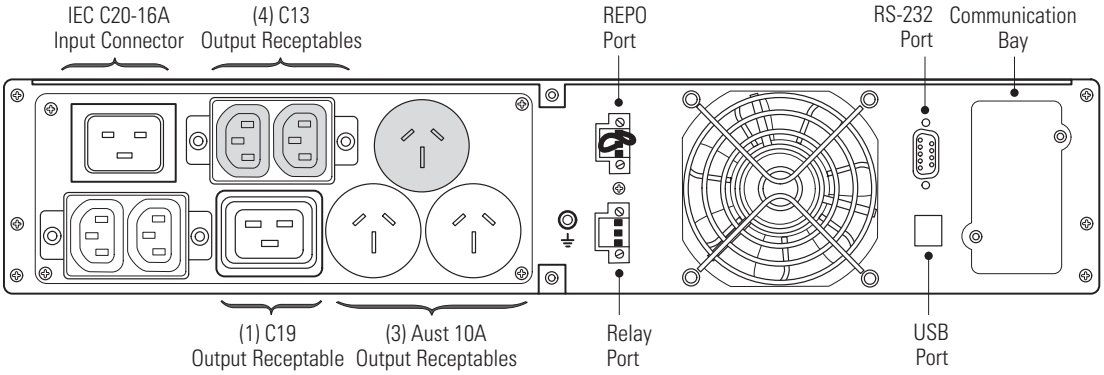

Figure 42. Model PW9130G3000R-XL2UAU

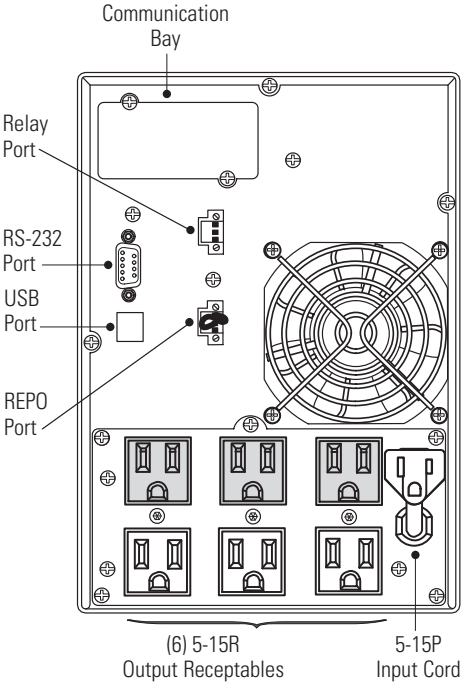

Figure 43. Model PW9130L700T-XL

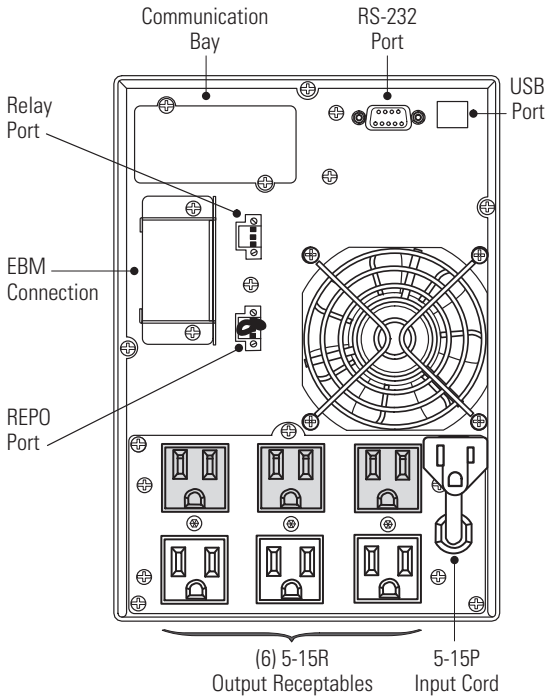

Figure 44. Model PW9130L1500T-XL

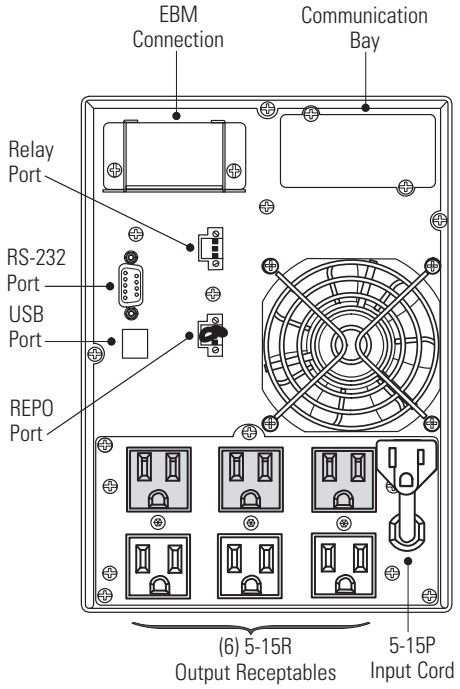

Figure 45. Model PW9130L1000T-XL

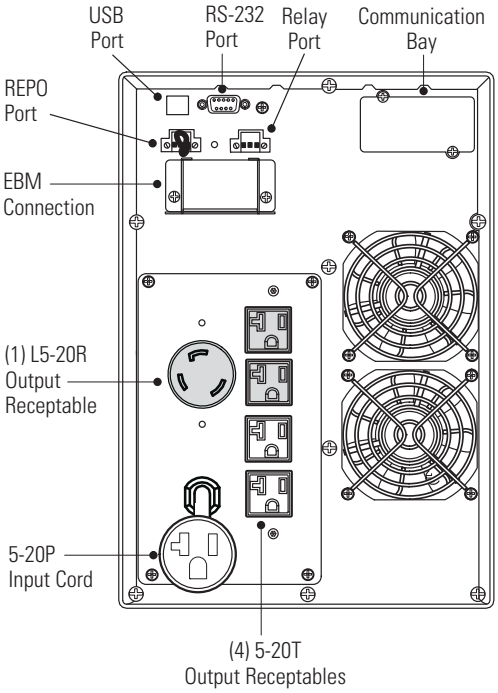

Figure 46. Model PW9130L2000T-XL

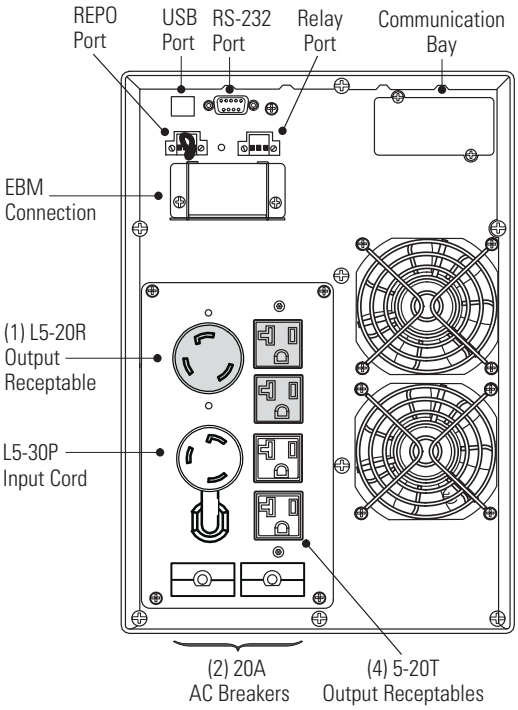

Figure 47. Model PW9130L3000T-XL

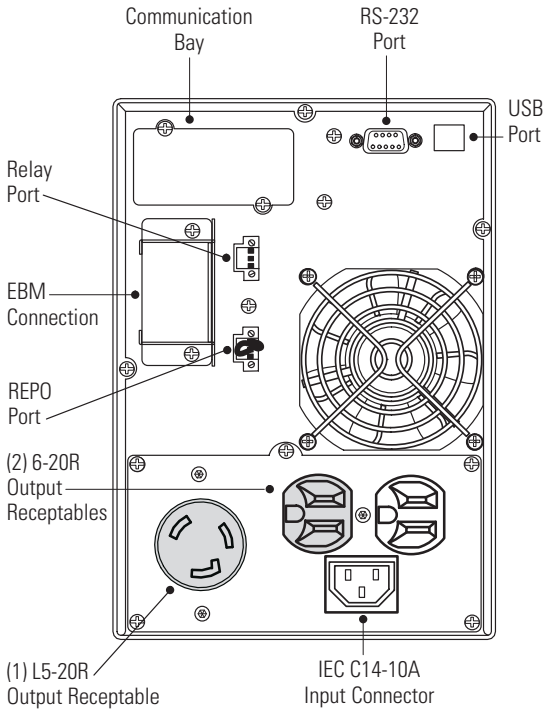

Figure 48. Model PW9130G1000T-XL

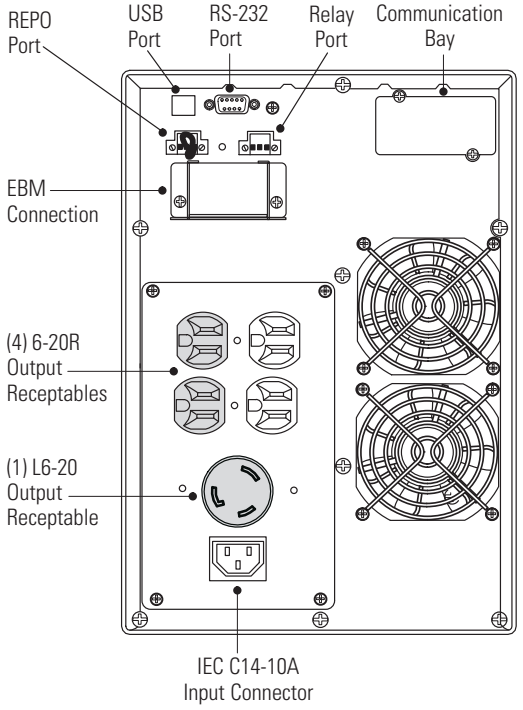

Figure 49. Model PW9130G2000T-XL

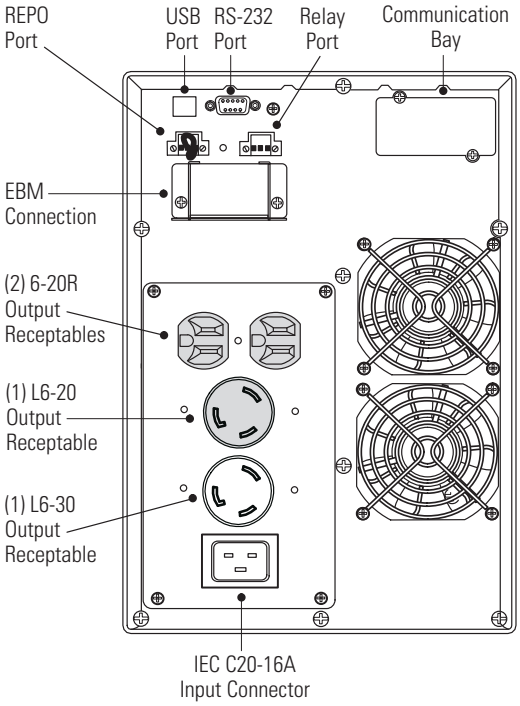

Figure 50. Model PW9130G3000T-XL

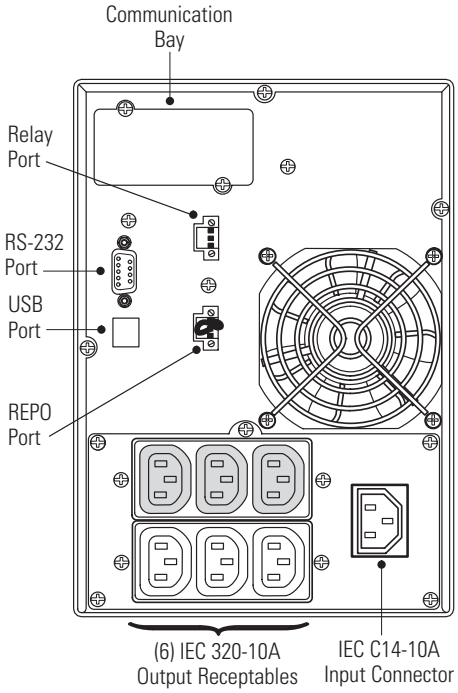

Figure 51. Model PW9130i700T

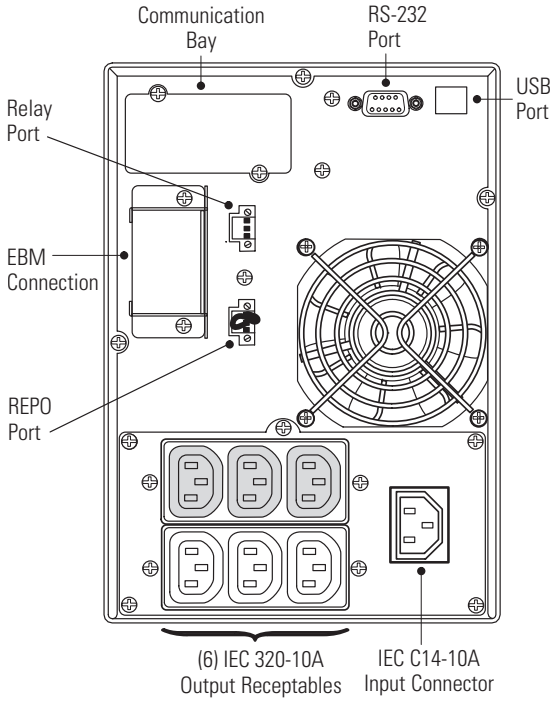

Figure 52. Model PW9130i1500T-XL

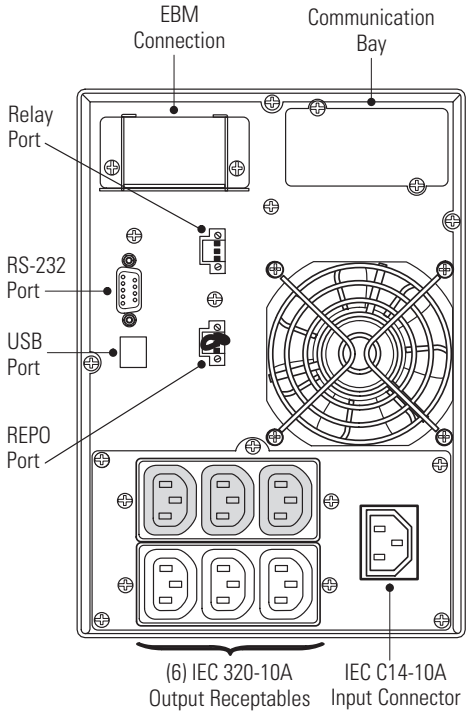

Figure 53. Model PW9130G1000T-XLEU and PW9130i1000T-XL

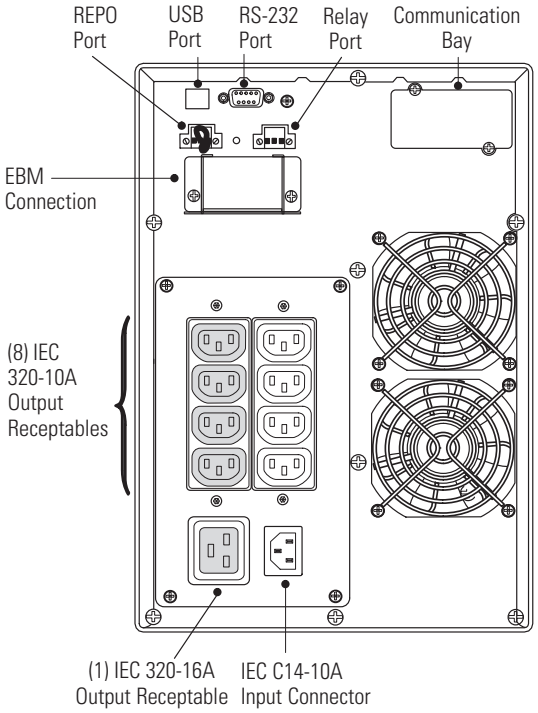

Figure 54. Models PW9130G2000T-XLEU and PW9130i2000T-XL

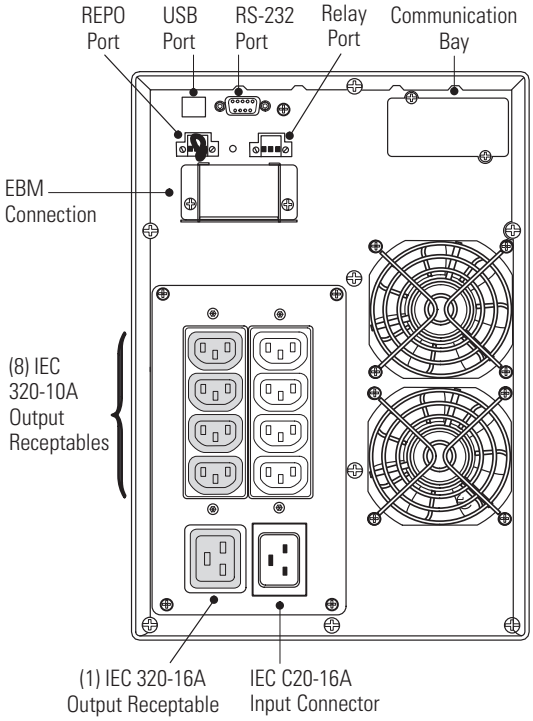

Figure 55. Models PW9130G3000T-XLEU and PW9130i3000T-XL

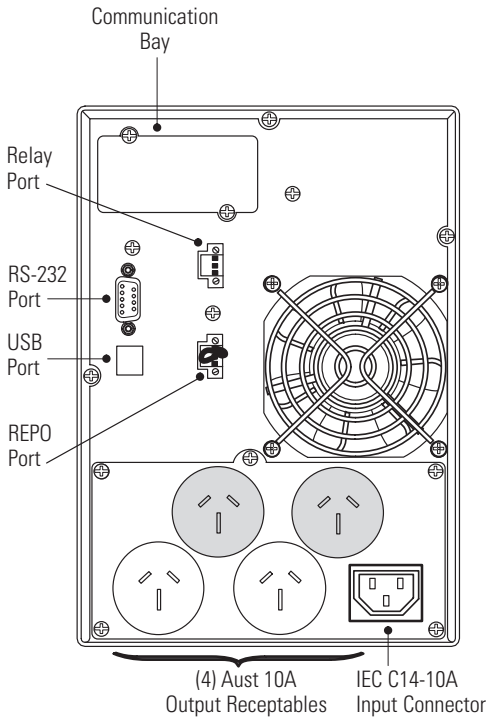

Figure 56. Model PW9130G1000T-XLAU

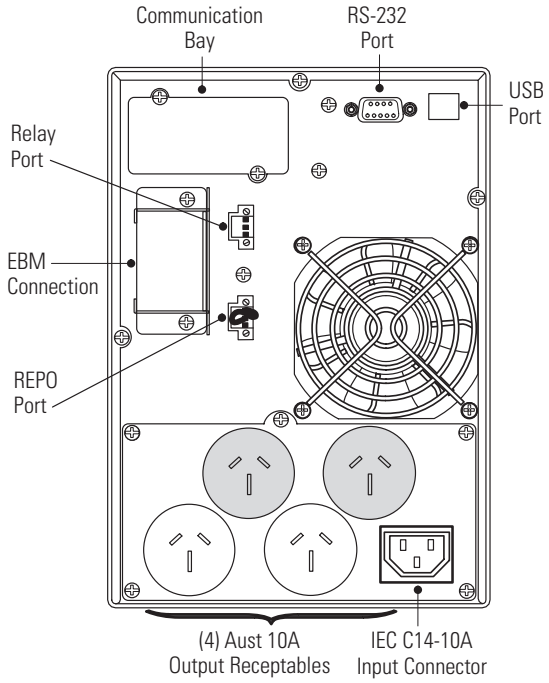

Figure 57. Model PW9130G700T-XLAU

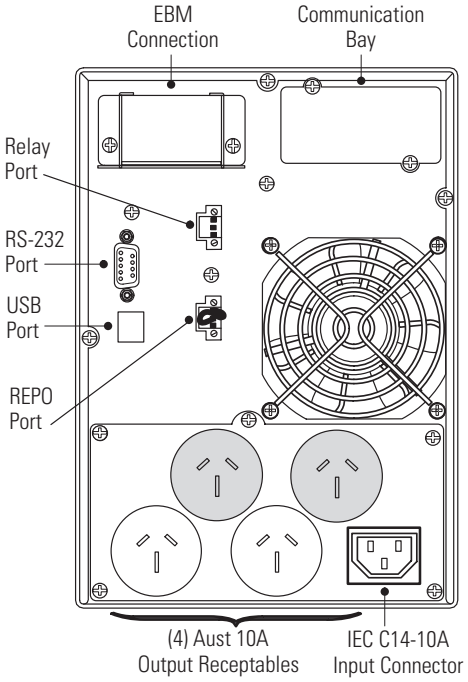

Figure 58. Model PW9130G1500T-XLAU

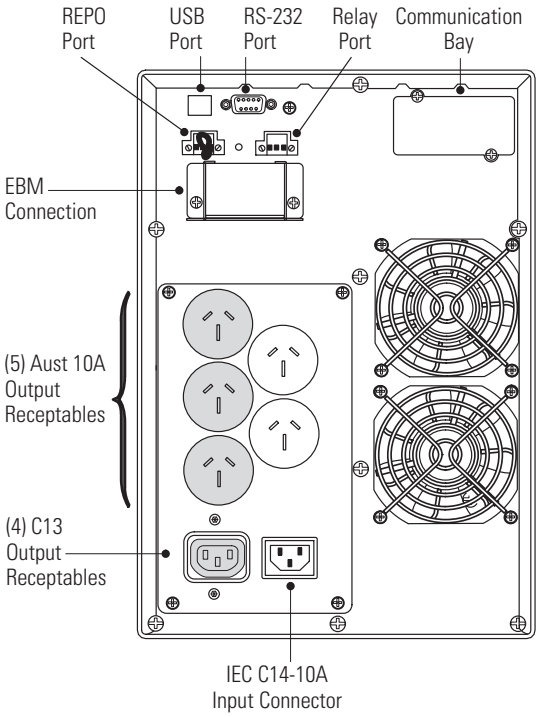

Figure 59. Model PW9130G2000T-XLAU

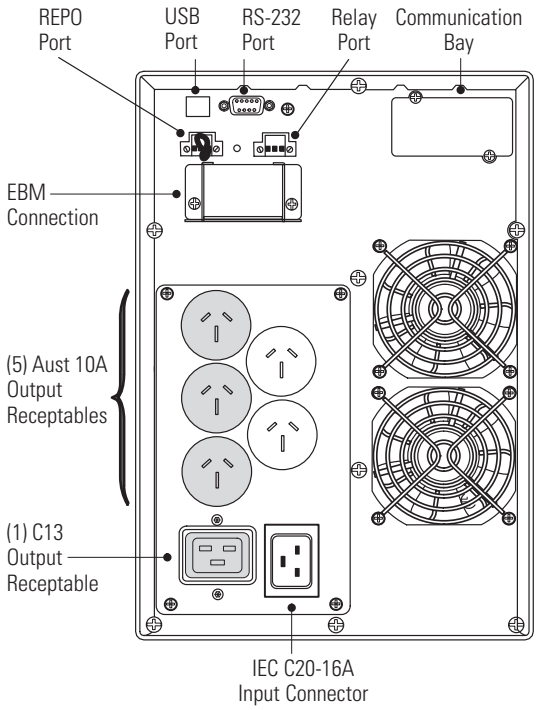

Figure 60. Model PW9130G3000T-XLAU

Chapter 8 Troubleshooting

The Eaton 9130 is designed for durable, automatic operation and also alerts you whenever potential operating problems may occur. Usually the alarms shown by the control panel do not mean that the output power is affected. Instead, they are preventive alarms intended to alert the user.

In general:

- Events are silent conditions that are recorded in the Event Log as status information, such as "Clock Set Done."
- Notices are announced by a beep every five seconds, recorded in the Event Log, and displayed on the LCD. Examples are "UPS on Battery" and "UPS on Bypass."
- Alarms are announced by a beep every second, recorded in the Event Log, displayed on the LCD, and the Alarm indicator illuminates. Examples are "Output Overload" and "Heatsink Overtemperature."

Use the following troubleshooting chart to determine the UPS alarm condition.

Typical Alarms and Conditions

To check the UPS Status menu for a list of active alarms:

1. Press any button on the front panel display to activate the menu options.
2. Press the ↓ button until UPS STATUS displays.
3. Press the Enter button to display the list of active alarms.

To check the Event Log for a history of conditions:

1. Press any button on the front panel display to activate the menu options.
2. Press the ↓ button until EVENT LOG displays.
3. Press the Enter button to display the list of conditions.

You can also retrieve the entire Event Log in ASCII format. See "Retrieving the Event Log" on page 36.

The following table describes typical alarms and conditions.

Table 31. Typical Alarms and Conditions

Alarm or Condition	Possible Cause	Action
On Battery LED is on. 1 beep every 5 seconds.	A utility failure has occurred and the UPS is in Battery mode.	The UPS is powering the equipment with battery power. Prepare your equipment for shutdown.
Battery Low LED is flashing slowly. 1 beep every second.	The UPS is in Battery mode and the battery is running low.	This warning is approximate, and the actual time to shutdown may vary significantly. Depending on the UPS load and number of Extended Battery Modules (EBMs), the "Battery Low" warning may occur before the batteries reach 25% capacity. See Table 23 to Table 26 starting on page 64 for estimated runtimes.
On Bypass LED is on. 1 beep every 5 seconds	The UPS is in Bypass mode.	The equipment transferred to bypass utility power. Battery mode is not available and your equipment is not protected; however, the utility power continues to be passively filtered by the UPS. Check for one of the following alarms: overtemperature, overload, or UPS failure.

Table 31. Typical Alarms and Conditions (Continued)

Alarm or Condition	Possible Cause	Action
On Bypass LED is on. No beeping.	The UPS is on bypass while operating on the High Efficiency setting.	The equipment transferred to bypass utility power as a normal function of High Efficiency operation. Battery mode is available and your equipment is protected.
Batteries Disconnected LED is on. 1 beep every second.	The UPS does not recognize the internal batteries.	If the condition persists, contact your service representative.
	The batteries are disconnected.	Verify that all batteries are properly connected. If the condition persists, contact your service representative.
Overload LED is on. 1 beep every second.	Power requirements exceed the UPS capacity (greater than 100% of nominal; see page 63 for specific output overload ranges).	Remove some of the equipment from the UPS. The UPS continues to operate, but may switch to Bypass mode or shut down if the load increases. The alarm resets when the condition becomes inactive.
Overtemperature LED is on. 1 beep every second.	The UPS internal temperature is too high or a fan has failed. At the warning level, the UPS generates the alarm but remains in the current operating state. If the temperature rises another 10°C, the UPS transfers to Bypass mode or shuts down if bypass is unusable.	If the UPS transferred to Bypass mode, the UPS will return to normal operation when the temperature drops 5°C below the warning level. If the condition persists, shut down the UPS. Clear vents and remove any heat sources. Allow the UPS to cool. Ensure the airflow around the UPS is not restricted. Restart the UPS. If the condition continues to persist, contact your service representative.
Battery Overvoltage LED is on. 1 beep every second.	The UPS battery voltage is too high.	The UPS turns off the charger until the next power recycle. Contact your service representative.
Site Wiring Fault. LED is on. 1 beep every second.	**"L" Models Only.** Ground wire connection does not exist, or the line and neutral wires are reversed in the wall outlet.	Have a qualified electrician correct the wiring.
	"G" Models Only. Input is phase to phase (neutral is not bonded to ground).	Disable the Site Wiring Fault Alarm setting (see "User Settings" on page 31).
	"i" and "G (AU)" Models Only. The polarity of the UPS input power cord connector is incorrect.	Rotate the Schuko input connector.
	"i" and "G (AU)" Models Only. The ground wire connection does not exist.	Have a qualified electrician correct the wiring. If the UPS is installed to input supply without ground, disable the "Site Wiring Fault Alarm" setting (see "User Settings" on page 31).
The UPS does not provide the expected backup time.	The batteries need charging or service.	Apply utility power for 48 hours to charge the batteries. If the condition persists, contact your service representative.

Table 31. Typical Alarms and Conditions (Continued)

Alarm or Condition	Possible Cause	Action
Power is not available at the UPS output receptacles.	The UPS is in Standby mode.	Supply power to the connected equipment: Press the On/Off button for at least 1 second, until the front panel displays "UPS starting…" .
The UPS does not start.	The power cord is not connected correctly.	Check the power cord connections.
	The Remote Emergency Power-off (REPO) switch is active or the REPO connector is missing.	If the UPS Status menu displays the "Remote Emergency Power Off" notice, inactivate the REPO input.
The UPS operates normally, but some or all of the protected equipment is not on.	The equipment is not connected correctly to the UPS.	Verify that the equipment is plugged into the UPS receptacles.
Battery test did not run or was interrupted.	One of the conditions listed in "Running Automatic Battery Tests" on page 39 was not present.	Resolve the condition, then restart the test.
The UPS does not transfer to Bypass mode.	The bypass utility does not qualify.	Check the bypass utility. The UPS is receiving bypass utility power that may be unstable or in brownout conditions.
	Bypass mode is disabled.	Check that the Bypass settings are configured correctly. See "Configuring Bypass Settings "on page 37.
USB communication does not work.	The serial port communication speed is set incorrectly for USB. USB requires 9600 bps.	Check that the "Serial Port Configuration" setting is set to 9600 bps. See "User Settings" on page 31.

Silencing the Alarm

Press any button on the front panel display to silence the alarm. Check the alarm condition and perform the applicable action to resolve the condition. If the alarm status changes, the alarm beeps again, overriding the previous alarm silencing.

Service and Support

If you have any questions or problems with the UPS, call your **Local Distributor** or the **Help Desk** at one of the following telephone numbers and ask for a UPS technical representative:

United States:	**1-800-356-5737**
Canada:	**1-800-461-9166 ext 260**
All other countries:	**Call your local service representative**

Please have the following information ready when you call for service:

- Model number
- Serial number
- Date of failure or problem
- Symptoms of failure or problem
- Customer return address and contact information

If repair is required, you will be given a Returned Material Authorization (RMA) Number. This number must appear on the outside of the package and on the Bill Of Lading (if applicable). Use the original packaging or request packaging from the Help Desk or distributor. Units damaged in shipment as a result of improper packaging are not covered under warranty. A replacement or repair unit will be shipped, freight prepaid for all warrantied units.

NOTE For critical applications, immediate replacement may be available. Call the **Help Desk** for the dealer or distributor nearest you.

Chapter 9 Warranty

Two-Year Limited Warranty (US and Canada)

Eaton UPS Models: 9130, 9135, 9140, 9PX, and FERRUPS® up to 3.1 kVA

WARRANTOR: The warrantor for the limited warranties set forth herein is Eaton ("Company").

LIMITED WARRANTY: This limited warranty (this "Warranty") applies only to the original End-User (the "End-User") of any Eaton 9130, 9135, 9140, 9PX, and FERRUPS up to 3.1 kVA Products (individually and collectively, the "Product") purchased on or after June 1, 2004, and cannot be transferred. This Warranty applies even in the event that the Product is initially sold by Company for resale to an End-User.

LIMITED WARRANTY PERIOD: The period covered by this Warranty for Product installed [and currently located] in the fifty (50) United States, the District of Columbia, and Canada is twenty-four (24) months from the date of purchase, or thirty (30) months from the date of shipment.

WHAT THIS LIMITED WARRANTY COVERS: The warrantor warrants that the Product and battery (individually and collectively, the "Warranted Items") are free from defects in material and workmanship. If, in the opinion of Company, a Warranted Item is defective and the defect is within the terms of this Warranty, Company's sole obligation will be to repair or replace such defective Warranted Item (including by providing service, parts, and labor, as applicable), at the option of Company.

PROCEDURES FOR REPAIR OR REPLACEMENT OF WARRANTED ITEMS: The Warranted Item will be repaired or replaced at a Company site or such other location as determined by Company.

If the Warranted Item is to be replaced by Company, and the End-User supplies a credit card number or purchase order for the value of the replacement Product, Company will use commercially reasonable business efforts to ship (via standard ground shipment and at no cost to the End-User) the replacement Warranted Item to the End-User within one (1) business day after Company receives notice of the warranty claim. In such case, the End-User must return (at Company's expense) the defective Warranted Item to Company in the same packaging as the replacement Warranted Item received by the End-User or as otherwise instructed by Company. If Company does not receive the defective Warranted Item, Company will either charge the End-User's credit card, or send the End-User an invoice (which the End-User agrees to pay), for the value of the replacement Product.

If the Warranted Item is to be replaced by Company, but the End-User is unwilling or unable to supply a credit card number or purchase order for the value of the replacement Product, Company will use commercially reasonable business efforts to ship (via standard ground shipment and at no cost to the End-User) the replacement Warranted Item to the End-User within one (1) business day after Company receives the defective Product from the End-User.

In any case, Company will provide shipping instructions and will pay its designated carrier for all shipping charges for return of defective equipment and replacement of Warranted Items. Any returned Warranted Item or parts that are replaced may be new or reconditioned. All Warranted Items returned to Company and all parts replaced by Company shall become the property of Company.

WHAT THIS LIMITED WARRANTY DOES NOT COVER: This Warranty does not cover any defects or damages caused by: (a) failure to properly store the Product before installation, including the charge of batteries no later than the date indicated on the packaging; (b) shipping and delivery of the Product if shipping is FOB Factory; (c) neglect, accident, abuse, misuse, misapplication, or incorrect installation; (d) repair or alteration not authorized in writing by Company personnel or performed by an authorized Company Customer Service Engineer or Agent; (e) improper testing, operation, maintenance, adjustment, or modification of any kind not authorized in writing by Company personnel or performed by an authorized Company Customer Service Engineer or Agent; or (f) use of the Product under other than normal operating conditions or in a manner inconsistent with the Product's labels or instructions.

This Warranty is not valid if the Product's serial numbers have been removed or are illegible. Any Warranted Items repaired or replaced pursuant to this Warranty will be warranted for the remaining portion of the original Warranty subject to all the terms thereof.

Company shall not be responsible for any charges for testing, checking, removal, or installation of Warranted Items.

COMPANY DOES NOT WARRANT EQUIPMENT NOT MANUFACTURED BY COMPANY. IF PERMITTED BY THE APPLICABLE MANUFACTURER, COMPANY SHALL PASS THROUGH SUCH MANUFACTURER'S WARRANTIES TO END-USER.

COMPANY DOES NOT WARRANT SOFTWARE, INCLUDING SOFTWARE EMBEDDED IN PRODUCTS, THAT IS NOT CREATED BY COMPANY. WITHOUT LIMITING THE FOREGOING, COMPANY SPECIFICALLY DOES NOT WARRANT SOFTWARE (SUCH AS LINUX) THAT WAS CREATED USING AN "OPEN SOURCE" MODEL OR IS DISTRIBUTED PURSUANT TO AN OPEN SOURCE LICENSE.

THIS WARRANTY IS THE SOLE AND EXCLUSIVE WARRANTY OFFERED BY COMPANY WITH RESPECT TO THE PRODUCTS AND SERVICES AND, EXCEPT FOR SUCH FOREGOING WARRANTY COMPANY DISCLAIMS ALL OTHER WARRANTIES INCLUDING BUT NOT LIMITED TO ANY IMPLIED WARRANTIES OF MERCHANTABILITY, TITLE, NON-INFRINGEMENT, AND FITNESS FOR A PARTICULAR PURPOSE. CORRECTION OF NON-CONFORMITIES IN THE MANNER AND FOR THE PERIOD OF TIME PROVIDED ABOVE SHALL CONSTITUTE COMPANY'S SOLE LIABILITY AND END-USER'S EXCLUSIVE REMEDY FOR FAILURE OF COMPANY TO MEET ITS WARRANTY OBLIGATIONS, WHETHER CLAIMS OF THE END-USER ARE BASED IN CONTRACT, IN TORT (INCLUDING NEGLIGENCE OR STRICT LIABILITY), OR OTHERWISE.

LIMITATION OF LIABILITY: The remedies of the End-User set forth herein are exclusive and are the sole remedies for any failure of Company to comply with its obligations hereunder. In no event shall Company be liable in contract, in tort (including negligence or strict liability) or otherwise for damage to property or equipment other than the Products, including loss of profits or revenue, loss of use of Products, loss of data, cost of capital, claims of customers of the End-User or any special, indirect, incidental, or consequential damages whatsoever. The total cumulative liability of Company hereunder whether the claims are based in contract (including indemnity), in tort (including negligence or strict liability) or otherwise, shall not exceed the price of the Product on which such liability is based.

Company shall not be responsible for failure to provide service or parts due to causes beyond Company's reasonable control.

END-USER'S OBLIGATIONS: In order to receive the benefits of this Warranty, the End-User must use the Product in a normal way; follow the Product's user's guide; and protect against further damage to the Product if there is a covered defect.

OTHER LIMITATIONS: Company's obligations under this Warranty are expressly conditioned upon receipt by Company of all payments due to it (including interest charges, if any). During such time as Company has not received payment of any amount due to it for the Product, in accordance with the contract terms under which the Product is sold, Company shall have no obligation under this Warranty. Also during such time, the period of this Warranty shall continue to run and the expiration of this Warranty shall not be extended upon payment of any overdue or unpaid amounts.

COSTS NOT RELATED TO WARRANTY: The End-User shall be invoiced for, and shall pay for, all services not expressly provided for by the terms of this Warranty, including without limitation, site calls involving an inspection that determines no corrective maintenance is required. Any costs for replacement equipment, installation, materials, freight charges, travel expenses or labor of Company representatives outside the terms of this Warranty will be borne by the End-User.

OBTAINING WARRANTY SERVICE: In the USA, call the Customer Reliability Center 7x24 at 800-356-5737. Outside of the USA, contact your local Eaton product sales or service representative for units purchased from those countries, or call the Customer Reliability Center in the USA at 919-845-3683 for units purchased in the USA that were shipped overseas. For comments or questions about this Warranty, write to the Customer Quality Representative, 8609 Six Forks Road, Raleigh, North Carolina 27615 USA.

Load Protection Guarantee (US and Canada)

Eaton UPS Models 3105, 3S, 5S, 5SC, 5110, 5115, 5125, 5P, 5PX, 9130, 9135, 9140, 9PX, 9155, 9170+, and FERRUPS

GUARANTOR: The Guarantor for the load protection guaranty set forth herein is Eaton ("Company").

LIMITED GUARANTY: This load protection guaranty (this "Guaranty") applies only to the original End-User (the "End-User") of any Eaton 3105, 3SC, 5S, 5SC, 5110, 5115, 5125, 5P, 5PX, 9130, 9135, 9140, 9PX, 9155, 9170+, and FERRUPS Products (individually and collectively, the "Product") and cannot be transferred. This Guaranty applies even in the event that the Product is initially sold by Company for resale to an End-User.

WHAT THIS GUARANTY COVERS: For the lifetime of the Product, Guarantor promises to repair or replace, at Guarantor's option, the equipment (valued up to the limits shown below*) that is damaged by an AC power line surge, spike, or other transient when properly connected to Guarantor's uninterruptible power system ("UPS"). Reimbursement for or restoration of data loss excluded. This Guaranty applies only if all of the following circumstances arise:

1. The UPS is plugged into properly grounded and wired outlets, using no extension cords, adapters, other ground wires, or other electrical connectors;
2. The installation of the UPS complies with all applicable electrical and safety codes described by the National Electrical Code (NEC);
3. The UPS was used under normal operating conditions and in accordance with all labels and instructions; and
4. The UPS was not damaged by accident (other than AC power line transient), misuse, or abuse.

***Cumulative Limits to be paid by Guarantor under this Load Protection Guaranty:**

$25,000 for Eaton UPS Models 3105 and 3S

$150,000 for Eaton UPS Models 5S, 5SC, 5110, 5115, 5125, 5P, and 5PX

$250,000 for Eaton UPS Models 9130, 9135, 9140, 9PX, 9155, 9170+, and FERRUPS products

WHAT THIS GUARANTY DOES NOT COVER: Any reimbursement or repair to End-User's equipment does not include reimbursement for or restoration of any data loss. This Guaranty does not cover any defects or damages caused by: (a) failure to properly store the Product before installation, including the charge of batteries no later than the date indicated on the packaging; (b) shipping and delivery of the Product if shipping is FOB Factory; (c) neglect, accident, abuse, misuse, misapplication, or incorrect installation of Product; (d) repair or alteration of Product not authorized in writing by Company personnel or performed by an authorized Company Customer Service Engineer or Agent; (e) improper testing, operation, maintenance, adjustment, or modification of any kind to the Product not authorized in writing by Company personnel or performed by an authorized Company Customer Service Engineer or Agent; or (f) use of the Product under other than normal operating conditions or in a manner inconsistent with the Product's labels or instructions.

This Guaranty is not valid: (a) unless the End-User returns to Company the Warranty Registration Card or completes the registration form on www.powerquality.eaton.com/productregistration within thirty (30) days of purchase; or (b) if the Product's serial numbers have been removed or are illegible.

Company shall not be responsible for any charges for testing, checking, removal or installation of any items.

LIMITATION OF LIABILITY: THE REMEDIES OF THE END-USER SET FORTH HEREIN ARE EXCLUSIVE AND ARE THE SOLE REMEDIES FOR ANY FAILURE OF COMPANY TO COMPLY WITH ITS OBLIGATIONS HEREUNDER. EXCEPT AS OTHERWISE PROVIDED FOR IN THIS GUARANTY, IN NO EVENT SHALL COMPANY BE LIABLE IN CONTRACT, IN TORT (INCLUDING NEGLIGENCE OR STRICT LIABILITY) OR OTHERWISE FOR DAMAGE TO PROPERTY OR EQUIPMENT OTHER THAN THE PRODUCTS, INCLUDING LOSS OF PROFITS OR REVENUE, LOSS OF USE OF PRODUCTS, LOSS OF DATA, COST OF CAPITAL, CLAIMS OF CUSTOMERS OF THE END-USER OR ANY SPECIAL, INDIRECT, INCIDENTAL OR CONSEQUENTIAL DAMAGES WHATSOEVER. THE TOTAL CUMULATIVE LIABILITY OF COMPANY HEREUNDER WHETHER THE CLAIMS ARE BASED IN CONTRACT (INCLUDING INDEMNITY), IN TORT (INCLUDING NEGLIGENCE OR STRICT LIABILITY) OR OTHERWISE, SHALL NOT EXCEED THOSE SET FORTH ABOVE.

Company shall not be responsible for failure to provide repair or replacement under this Guaranty due to causes beyond Company's reasonable control.

END-USER'S OBLIGATIONS: In order to receive the benefits of this Guaranty, the End-User must use the Product in a normal way; follow the Product's user's guide; and protect against further damage to the Product if there is a covered defect.

OTHER LIMITATIONS: Company's obligations under this Guaranty are expressly conditioned upon receipt by Company of all payments due to it (including interest charges, if any). During such time as Company has not received payment of any amount due to it for the Product, in accordance with the contract terms under which the Product is sold, Company shall have no obligation under this Guaranty.

COSTS NOT RELATED TO GUARANTY: The End-User shall be invoiced for, and shall pay for, all services not expressly provided for by the terms of this Guaranty, including without limitation, site calls involving an inspection that determines no corrective maintenance is required. Any costs for replacement equipment, installation, materials, freight charges, travel expenses or labor of Company representatives outside the terms of this Guaranty will be borne by the End-User.

TO MAKE A CLAIM: In the USA, call the Customer Reliability Center 7x24 at 800-356-5737. Outside of the USA, contact your local Eaton product sales or service representative for units purchased from those countries, or call the Customer Reliability Center in the USA at 919-845-3683 for units purchased in the USA that were shipped overseas. For comments or questions about this Warranty, write to the Customer Quality Representative, 8609 Six Forks Road, Raleigh, North Carolina 27615 USA.

164201718 8

Flexy 205 Datasheet

Ewon Flexy 205 is a compact modular IIoT gateway for collecting Remote Data and providing Remote Access to your industrial equipment.

With a configurable WAN/LAN switch, this gateway offers a wide range of extension cards to best fit your application and is perfect for data-intensive applications. Whether your requirements are to: create alarms, monitor dashboards, collect data for machine performance analysis, or even other advanced solutions, the Flexy 205 will meet your needs and expand your possibilities.

Like other routers from the Flexy family, the Flexy 205 has a web-based configuration and built-in scripting tools for customization.

Through the use of our Talk2M APIs, HTTPs scripting, or MQTT scripting, we enable easy integration with your favorite IIoT platform. The flexibility and robustness of the Flexy 205 guarantees a wide array of value-add services for Machines Builders.

Highlights

- IIoT gateway with most PLC protocols
- Flexible WAN interface: Ethernet, 4G, 3G, WiFi
- High performance for data processing
- Data log a
- OPC UA & Modbus server
- Compact and robust design, ideal for electrical cabinet
- Easy to set up through embedded web pages
- MQTT scrip o connect with IIoT Pla orms
- SD card ready for easy commissioning

Typical Applications

- Remote Dat pla orms
- Remote Monitoring
- Remote Access

Extension cards

4G LTE | 3G+ | WiFi | Ethernet | MPI | 2 Serial ports | 3 USB ports | I/O

General Features	
Routing	R apability between LAN and WAN Ethernet interface and Ethernet to serial gateway
Ethernet to Serial Gateways	MODBUS TCP to MODBUS RTU; XIP to UNITELWAY; EtherNet/IP™ to DF1; FINS TCP to FINS Hostlink; ISO TCP to PPI, MPI (S7) or PROFIBUS (S7); VCOM to ASCII.
Data Acquisition Protocols	OPC UA, MODBUS/RTU, MODBUS/TCP, Unitelway, DF1, PPI, MPI (S7), PROFIBUS (S7), FINS Hostlink, FINS TCP, EtherNet/IP™, ISO TCP, Mitsubishi FX, Hitachi EH, ASCII, BACnet/IP. Stored in 2500 internal tags
Data Publishing Protocols	OPC UA, Modbus, MQTT, SNMP
Alarms	a y email, SMS, FTP put and/or SNMP traps. 4 Thresholds : low, lowlow, high, a y.Alarm logs in h FTP, Alarm cycle: ALM, RTN, ACK and END
Datalogging	Internal data base for data logging (r ging and historical logging up to 1,000,000 stamps). Retrieval of the dat ansferred by FTP or email
SD card reader	YES, for easy c ware upgrade, backup, Talk2M registra
Router	ering, IP forwarding, NAT, Port forwarding, Proxy, R able, DHCP client/server
VPN Tunnelling	Open VPN either in SSL UDP or HTTPS
VPN Security	VPN sessions are end-to-end encrypted using SSL/TLS protocol. Communications between the remote user and the eWON are fully encrypted using the SSL/TLS protocol, thereby ensuring data authenticity, integrity & confidentiality. Indeed, all users and eWON units are authenticated using x509 SSL certificates and end-to-end traffic is encrypted using strong symmetric & asymmetric algorithms that are part of the SSL/TLS protocol cipher suite.
Programmable	Script interpreter for Basic language, Java 2 Standard E vironment
Synchronization	Embedded r tup via h oma
File Management	FTP client and server for con a firmware update and data transfer
Website	Embedded web interface with setup wizards for configuration and maintenance (no extra software needed). Authentication with login/password and session control for security. Possibility of uploading custom web GUI. Compatible with viewON web HMI.
User Flash Disk	up to 30MB available for user applica
Maintenance	SNMP and/

Flexy 205 Base Module	
Mechanicals	Din Rail or wall screw fixing system Dimensions: 133 x 122 x 55 mm (H x D x W); Weight: 280 g without extension card
Power supply	12 - 24VDC +/-20%, LPS Consump xtension card installed (see Installa ebsite)
Input/output	2x digital input: 0 to 12/24VDC; 1.5kV isolation 1x digital output: open drain (MOSFET) 200mA; 1.5 kV isolation
Flexy 205 base module interface	4 x RJ45 Ethernet 10/100 Mb .Configurable LAN/WAN ports, port 1 always LAN

Flexy Extenstion Cards

Dual serial ports (FLA3301)	
Number of ports	1x male SUBD9 serial port RS232/422/485 configurable by dipswitch and 1x male SUBD9 RS232 serial port with RTS, CTS signals

Cellular 3G+ (FLB3202)	
Frequancies	Pentaband UMTS/HSPA+ modem (800/850, 900, AWS1700, 1900, 2100 MHz) Quad band GPRS/EDGE (850, 900, 1800, 1900 MHz)
Antenna Connector	Type SMA - Female
Antenna	Not included in the delivery

EU 4G LTE (FLB3204)	
Frequencies	4G: B7(2600), B1(2100), B3(1800), B8(900), B20 (800)MHz 3G: B1 (2100), B8 (900) MHz 2G: B3 (1800) , B8(900) MHz
Antenna Connector	Type SMA - Female
Antenna	Not included in the delivery

NA 4G LTE (FLB3205)	
Frequencies	AT&T compliant 4G: B12/B13(700),B5(850), B4(AWS1700),B2(1900), 3G: B2(1900), B5(850)MHz
Antenna Connector	Type SMA - Female
Antenna	Not included in the delivery

Verizon 4G LTE (FLB3203)	
Frequencies	only Verizon network compa , no CDMA 4G: B4(AWS1700), B13(700) MHz
Antenna Connector	Type SMA - Female
Antenna	Not included in the delivery

WiFi (FLB3271)	
Wan connectivity	WiFi: 802.11 b/g/n WiFi/WLAN client for remote c
Frequencies	Channels: 1 to 11 (inclusive)
Security	WPA2, WPA and WEP
Antenna Connector	Reverse SMA male connector
Antenna	included in the delivery; frequency: 2.4 GHz; impedance: 50 Ohms, gain:2.0 dB

I/O card (FLX3402)	
Number of inputs/output	I/O card with 8x DI, 2x DO, 4x AI (0-10V, 4-20mA)
Range	AI : voltage mode 0-10V - 16 bit resolution or current mode 4-20mA, user selectable with Dip Switch con guration. DI : 0 to 12/24 VDC,DO: 2A/30V VAC/VDC
Isolation	AI: 1.5kV from power supply, DI: 1.5 kV from electronic AND power supply, DO: 1.5kV from electronic AND from power supply

3 USB Ports Card (FLB3601)	
Leds	4 leds : 1 global status, 1 for each port status
Connector	Type A female
Current limit	Each port has its own 500mA current limit. Global current limit on the board is 500mA
Port activation	All ports will be enabled/disabled together
Isolation	Earth GND isola ed to 500V due to USB connector design

Ethernet WAN (FLX3101)	
Ethernet port	1x RJ45 Ethernet 10/100 base Tx; 1.5kV isola

MPI (FLC3701)	
	1 x f om power supply

Temperature Range	
base modules and extension cards	Opera o +70°C, 10 to 95% rela ve humidity (non-condensing) Storage: -40°C to +70°C, 10 to 95% rela e humidity (non-condensing)
Marking	CE FCC cULus
Warranty	36 months
Type tests	Temperature - Opera orage tested according to: IEC 60068-2-1 Cold test IEC 60068-2-2 Dry heat test IEC 60068-2-14 Change of temperature IEC 60068-2-30 Cyclic damp heat test Vibra s tested according to: IEC 60068-2-27 Bumps IEC 60068-2-64 Vibra oad-band random) IEC 60068-2-6 Vibra
CE	Compliant with: EMC dir e 2014/30/EU RE dir e 2014/53/EU* LV dir e 2014/35/EU* RoHS dir e 2011/65/EU REACH regula According to standards: EMC: ITE emission Class A and Immunity EN55032; EN55024 EN301489-1*; EN301489-17*; EN301489-52* Spectrum*: EN301511; EN301908-1; -2 & 13 EN300328 Health: EN62311 Safety: EN60950
FCC	Compliant with: CFR 47, part 15B class A; 15C*; 22H*; 24E*; 27*; 68*
IC	Compliant with IC (Industry Canada) RSS-130 -132; RSS-133; RSS-139; RSS-210
Japan	This equipment has the Type Approval Certification based on the Radio Law
Safety	Conform to: EN60950-1; UL60950-1; CSA-C22.2 n° 60950-1-07 UL recogniz

* when applicable depending on the plugged EXT cards

Part Number

Base Module	Part Number
Flexy 205	Flexy 205

Extension Cards	
Dual serial ports	
Cellular 3G+	
EU 4G LTE	
NA 4G LTE	
VERIZON 4G LTE	
WIFI	
3 USB Ports Cards	
Ethernet WAN	
Extension I/O card	
MPI	

Flexy Family User Guide

USER MANUAL

UM-0002-00 1.4 en-US ENGLISH

Important User Information

Disclaimer

The information in this document is for informational purposes only. Please inform HMS Industrial Networks of any inaccuracies or omissions found in this document. HMS Industrial Networks disclaims any responsibility or liability for any errors that may appear in this document.

HMS Industrial Networks reserves the right to modify its products in line with its policy of continuous product development. The information in this document shall therefore not be construed as a commitment on the part of HMS Industrial Networks and is subject to change without notice. HMS Industrial Networks makes no commitment to update or keep current the information in this document.

The data, examples and illustrations found in this document are included for illustrative purposes and are only intended to help improve understanding of the functionality and handling of the product. In view of the wide range of possible applications of the product, and because of the many variables and requirements associated with any particular implementation, HMS Industrial Networks cannot assume responsibility or liability for actual use based on the data, examples or illustrations included in this document nor for any damages incurred during installation of the product. Those responsible for the use of the product must acquire sufficient knowledge in order to ensure that the product is used correctly in their specific application and that the application meets all performance and safety requirements including any applicable laws, regulations, codes and standards. Further, HMS Industrial Networks will under no circumstances assume liability or responsibility for any problems that may arise as a result from the use of undocumented features or functional side effects found outside the documented scope of the product. The effects caused by any direct or indirect use of such aspects of the product are undefined and may include e.g. compatibility issues and stability issues.

Table of Contents

Page

1 Preface 3

1.1 About This Document 3

1.2 Document History 3

1.3 Related Documents 3

1.4 Trademark Information 3

2 Requirements 4

2.1 Hardware 4

2.2 Software 4

3 Get in Touch with the Flexy 5

3.1 Assigning an IP Address 5

3.2 Accessing the Web Configuration Interface 5

4 Quick Launch Wizard 6

4.1 System Wizard 6

4.2 Internet Wizard 7

4.3 VPN Wizard 8

4.4 Gateway Wizard 8

5 Remote Access 9

6 Create Tags and Monitor Values 10

6.1 Available IO Servers 10

6.2 Tag Management 10

6.3 Tag Creation 10

6.4 Monitor Tags 13

7 Alarm Management 14

7.1 Configure Alarm Settings for a Tag 14

7.2 Alarm Display 14

7.3 Alarm Summary 14

7.4 Alarm History 15

7.5 Alarm Actions 15

8 Real-time Logging 17

8.1 Real-time Logging Configuration 17

8.2 Real-time Graph 17

9 Historical Logging 18
9.1 Historical Logging Configuration 18
9.2 Historical Logging Graph 18
9.3 Historical Logging Table 18

10 Files Transfer Page 19

11 Task Planner 20
11.1 Configure FTP Server Settings 20

12 Tag Publishing 22

13 Data Management 23
13.1 Talk2M API 23
13.2 Live data and KPI's 23

14 NAT 1:1 24

15 Custom Web Pages 25

16 Backup and Restore 26

17 Other Configuration Mechanisms 27
17.1 FTP 27
17.2 SD Card 27

18 Export Block Descriptors 28

19 Scripting 29

20 User Management 30

21 Troubleshooting 31
21.1 Summary Page 31
21.2 Event Log 31
21.3 Scheduled Actions 32

1 Preface

1.1 About This Document

This guide presents the features of the Ewon Flexy and explains briefly the steps to take to get a functional Flexy.

For additional related documentation and file downloads, please visit www.ewon.biz/support.

1.2 Document History

Version	Date	Description
1.0	2018-01-12	First release
1.1	2018-04-17	Changing scope of the document: Flexy 205 => Flexy Family
1.2	2018-08-29	Changed: List of IO servers Added: NTP Client / Server Added: Anybus Bolt Configuration Added: Time Zone Added: Tag KPI Added: String Tags Added: OPCUA
1.3	2019-06-12	Changed: Disclaimer
1.4	2019-10-03	Changed: Overall display

1.3 Related Documents

Document	Author	Document ID
Ewon Configured by SD Card	HMS	AUG-0062-00
eBuddy	HMS	AUG-0063-00
OPC UA Server	HMS	AUG-0064-00
Configure your Ewon using FTP	HMS	KB-0020-00
Email & text message (SMS) relaying using Talk2M	HMS	KB-0046-00
Alarm Email & SMS Templates	HMS	KB-0054-00
Publish Tags in SNMP	HMS	KB-0150-00
Publish Tags in Modbus TCP	HMS	KB-0184-00
IO Servers	HMS	RG-0007-00
Reference Guide: Flexy Family	HMS	RG-0008-00
Export Block Descriptor	HMS	RG-0009-00

1.4 Trademark Information

Ewon® is a registered trademark of HMS Industrial Networks SA. All other trademarks mentioned in this document are the property of their respective holders.

2 Requirements

2.1 Hardware

This guide presents the features of the Flexy which can be combined with optional extension cards if needed.

Without extension cards, the Flexy provides Remote Access and Remote Data Services to Ethernet devices over the local Ethernet network.

Extension cards permit the Flexy to communicate to a wider range of field devices including USB and serial devices and to use additional Internet connectivity technologies such as Wi-Fi and cellular modems.

2.2 Software

The Flexy is configured through its web interface which is accessible with any modern web browser. The recommended platforms are:

- Firefox 15 and higher.
- Chrome 16 and higher.
- Safari 11 and higher.
- Edge 13 and higher.

eBuddy

The companion tool eBuddy assists with initial IP address configuration for the Flexy and with maintenance tasks such as upgrading firmware, creating/restoring backups...

Download eBuddy.

eCatcher

The companion tool eCatcher is needed if the Flexy will connect to the Talk2M infrastructure to allow remote access to its plugged in equipment.

Download eCatcher.

3 Get in Touch with the Flexy

3.1 Assigning an IP Address

The first communication with the Flexy can be established using the companion tool eBuddy (check *Software, p. 4* for more details about eBuddy).

To change the IP address of the Flexy:

1. Connect the port labeled as **LAN** (port #1) of your Flexy.

   This can be done either to the computer point-to-point or through a network if the default IP of the Flexy, which is 10.0.0.53, will not conflict with another connected device.

2. Start the eBuddy application.

   The application scans through the Ethernet adapter network and identifies the connected Ewon devices displaying the IP address, subnet mask and serial number.

   The utility also allows the modification of the default IP address without necessarily being in the same network range.

3. Optional: Highlight the row representing the device to be modified

4. Click on the button **Set IP** from the top bar menu or hit the F2 keyboard shortcut.

5. If step 3 was skipped, indicate the serial number of the Flexy to be modified. Click **Next**.

6. Enter the new IP address and its subnet mask. By clicking **Next**, eBuddy sends the commands to the Flexy to change its IP address and to reboot.

7. Once the reboot completes, the Flexy will be accessible at its new IP address.

3.2 Accessing the Web Configuration Interface

The configuration of the Flexy can be done using its internal web pages.

While your computer is connected to a LAN port of the Flexy, open an Internet browser and enter the LAN IP address of the Flexy into the address field.

If your computer is not in the same network address range as the Flexy, the web interface can be reached using the *EZ DHCP* feature of eBuddy. For more information, refer to the eBuddy reference in *Related Documents, p. 3*.

Before beginning the configuration of the Flexy, authentication is required. The default login and password are both **adm**.

> **!** For security reasons, the default password must be changed.

The password can be changed through the *System Wizard* described below.

At the first boot of the Flexy or after a reset level 2 and after successfully logging in, a prompt will appear to set the interface language.

After the interface language is selected, a wizard button appears which allows a quick configuration of the system and communication settings of the Flexy. On later connections, the configuration wizard is accessible through the *Wizards* button in the upper right corner.

4 Quick Launch Wizard

The *Quick Launch Wizard* makes it easy to configure the initial system and communication settings for the Flexy.

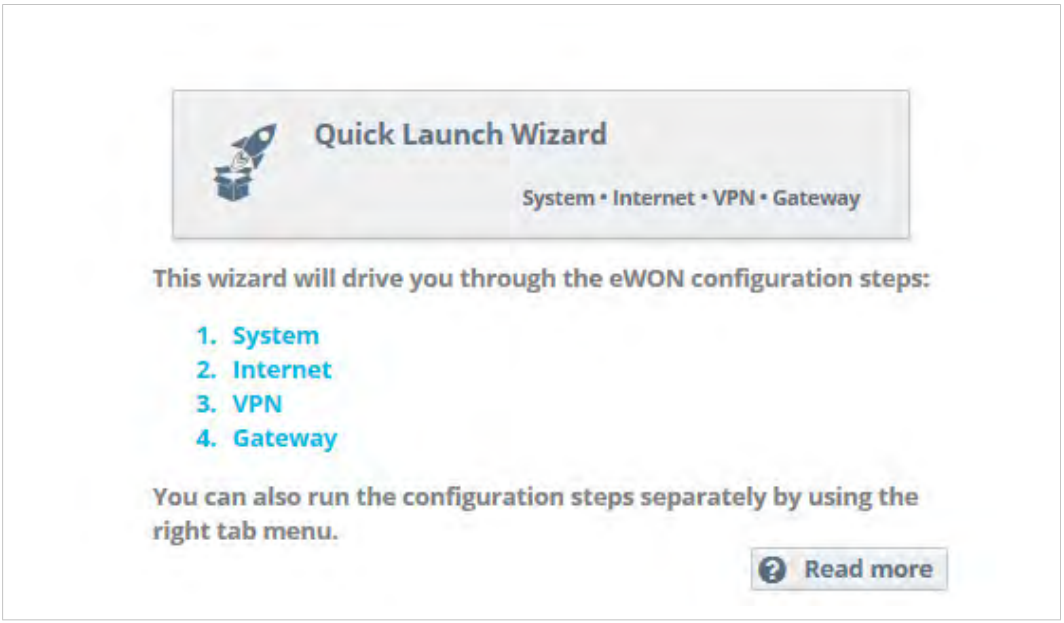

Fig. 1 Quick Launch Wizard Button

It passes sequentially through the *System Wizard*, the *Internet Wizard* and the *VPN wizard*:

- The *System Wizard* configures basic system settings such as the date & time and the default username & password.
- The *Internet Wizard* configures the WAN or Internet communication settings for the Flexy.
- Once the *Internet Wizard* is complete, the *VPN wizard* connects the Flexy to the Talk2M VPN infrastructure or to an eFive VPN server.

Based on the hardware configuration of the Flexy, the *Quick Launch Wizard* can also include the *Gateway Wizard* which assists in configuring communication to serial, MPI and USB devices. Each wizard can also be run independently through the menu options on the right hand of the Wizards page.

4.1 System Wizard

The *System Wizard* configures basic system settings.

The first screen of the *System Wizard* configures the name of the device and the default user settings. However, checking the **Erase all first** checkbox will erase all previously configured settings on the Flexy.

The **<Ewon name>** helps identify the Flexy for an application. The name appears in the footer of every web page and can be included in reports and alarm notifications.

The Flexy comes with an initial default user with username **adm** and password **adm**.

> **!** For security reasons, it is required to change the default password for the **adm** user. This username and password can be changed in the *System Wizard*.

Additional users can be added from *Setup* ▸ *Users* menu. More information about adding additional users is described later in this document.

Click **Next** to proceed to the second screen.

The second screen of the *System Wizard* configures the date & time settings. For Talk2M communication, the date of the Flexy must be correct. Click on the Timezone or Datetime field icons in the to adjust the date. If typing the date & time directly into the field, be sure to format the value as shown.

With regard to the timezone option. it allows to configure the timezones including day saving time [DST] by clicking either on the arrow or the map icon.

Caution
Starting firmwre v13.1s0, the exported Ewon data (through EBD, Talk2M API or any other methods) with timestamps are by default exported in UTC!

To enable automatic date and time synchronization with an NTP server, check the **Enable NTP** checkbox and adjust the NTP synchronization settings as needed.
The default remote NTP server is `ntp.talk2m.com` but other NTP servers can be used.

Click **Next** to proceed to the next screen.

The following LAN / WAN ports attribution step of the System wizard applies only for the Flexy 205.

The third screen of the *System Wizard* configures the attribution of the ports of the four ports switch. Click on a port to change its attribution.

If no Ethernet extension card is detected then ports #2, #3, and #4 can be configured to be either a LAN (local access) port or a WAN (Internet access) port. Port #1 will always remain a LAN port.

The attribution of a port can be easily recognized by its LED color:

- Orange for a WAN port.
- Green for a LAN port.

If an Ethernet extension card is detected, all four ports are set to LAN ports and are not configurable.

Click **Next** to save the system settings.

If the attribution of the ports changed during the wizard, reboot the Flexy to apply the changes.

4.2 Internet Wizard

The Internet Wizard configures the WAN or Internet settings for the Flexy. The options available will depend on the specific hardware configuration of the Flexy.

The first screen selects the WAN interface that will be active.

Checking the **<Initialize Configuration>** checkbox will delete any existing WAN and VPN settings already configured.
From the drop down menu, select the WAN interface to configure and activate.

Click **Next** to begin the WAN interface configuration.

Subsequent screens will differ depending on the WAN interface selected.
Below are the steps for connecting the Flexy to an Ethernet network. Information about configuring other WAN interfaces is available in the General Reference Guide from the *Related Documents, p. 3*.

In the **<Address Setup>** section, select **DHCP** from the dropdown menu to have the Flexy receive an address automatically from the network or **Static** and then enter the network address settings manually.

If the network uses a proxy server and the Flexy will connect to Talk2M, check the **<Connect to Talk2M through Proxy>** checkbox.

Click **Next** to proceed to the next screen.

Check the **Enabled** checkbox to make a test connection to the Internet. If this network uses a proxy server or if port 80 is closed for outbound connections, leave this checkbox unchecked.

Click **Next** to apply the configuration changes.

If the wizard completes successfully, the Flexy is now connected to the local Ethernet network. If the wizards fails, check with the local network administrator for any special connection instructions.

4.3 VPN Wizard

The *VPN Wizard* configures the settings required to connect the Flexy with the Talk2M infrastructure or an eFive network.

The first screen of the *VPN Wizard* selects the VPN network to use. Information for connecting to an eFive network is available on www.ewon.biz/support.

To connect the Flexy to the Talk2M VPN infrastructure, click the **T2M (Configure Talk2M connectivity)** button.

Before proceeding with the Talk2M wizard, the Flexy must first be defined in eCatcher. Information about eCatcher and defining Ewon devices is available on .

On the next screen select the registration mechanism.

To register with an activation key, select **Register with Activation Key** and enter the appropriate activation key.
To register with an Ewon Name, select **Register with Ewon Name** and enter the Talk2M account name, the name of the Flexy on the account, and valid user credentials for this account.

Click **Next** to advance to the next screen.

If the network used for Internet access uses a proxy server, check the **Enable** checkbox in the **<Connect via HTTP Proxy>** section and enter the appropriate connection information for the proxy server.

Click **Next** to test and apply the Talk2M connection settings.

If the wizard completes successfully, the Flexy is properly configured for Remote Access through Talk2M. If the wizard fails, the Diagnosis section will give additional troubleshooting information.

4.4 Gateway Wizard

If the hardware configuration of the Flexy includes certain extension cards that allow communication with field devices over interfaces other than Ethernet, the Wizards might include the *Gateway Wizard*.

The *Gateway Wizard* configures any necessary communication parameters for these cards. For specific information about the hardware configuration of the Flexy, check the General Reference Guide from the *Related Documents, p. 3*.

5 Remote Access

The Flexy can be used to allow remote access to a wide variety of PLCs.

Under most circumstances, completing the *Quick Launch Wizard* successfully configures the Flexy for remote access. In addition, there may be additional configuration steps required in the programming software of the field device.

Specific documentation for remote access to different manufacturers' PLCs is available, check www.ewon.biz/support.

6 Create Tags and Monitor Values

The tags are variables monitored by the Flexy. The tag values can change over time and can come from a variety of data sources including external devices such as PLCs. These data sources are called IO Servers.

6.1 Available IO Servers

The Flexy supports data monitoring for many different data sources. The list of available IO servers include:

IO Server	Data Source
MEM	Internal memory tags
EWON	IO and internal system values of the Flexy
MODBUS	Modbus Devices (TCP and RTU)
OPC UA	Devices capable of handling the OPC UA protocol.
SNMP	SNMPv1 Devices
DF1 ABLOGIX	Allen-Bradley PLCs
FINS	Omron PLC
S73&400 S7200 S5-AS511 NETMPI	Siemens PLCs
HITACHI	Hitachi PLCs
MELSEC MITSUFX	Mitsubishi PLCs
BACNET	BACnet
UNITE	Schneider PLCs (UNITELWAY)

Some IO servers require specific extension cards and are not available if the current hardware configuration of the Flexy is not compatible.

The IO server configuration pages are available from *Tags* ► *IO Servers* menu. Select the appropriate IO server from the menu.

Detailed information about configuring the specific IO server for different external devices is available in the PLC area on www.ewon.biz/support and in the IO Servers reference from the *Related Documents, p. 3*.

6.2 Tag Management

Tags on the Flexy can be created and managed from *Tags* ► *Values* menu.

The values page has two modes:

- The **<SETUP>** mode is for creating and deleting tags but also editing existing tag settings.
- The **<VIEW>** mode is for monitoring and changing tag values.

6.3 Tag Creation

In **<SETUP>** mode on the *Tags* ► *Values* page, tags can be added by clicking on the **Add** button.

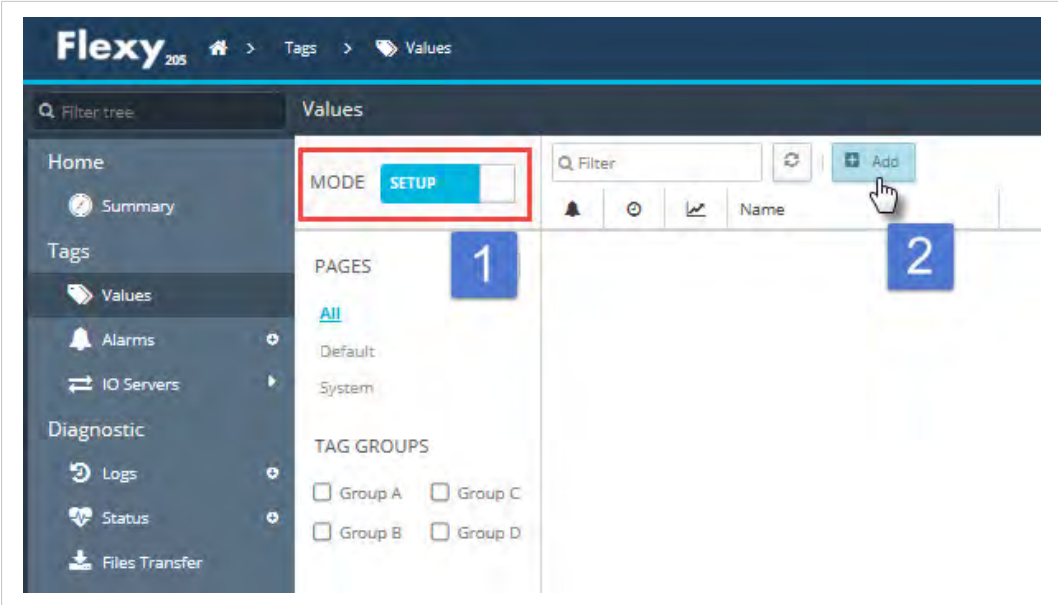

Fig. 2 **Change from VIEW to SETUP Mode to Create a Tag.**

On the *Tag Setup* screen, there are several key fields that identify a tag and its data source.

Every tag must have a **<Tag Name>** which uniquely identifies the tag on the Flexy. An optional **<Tag Description>** can be used to provide additional information about this tag.

The **<Server Name>**, the **<Topic Name>** and the **<Tag Address>** identify the variable and data source to monitor with a tag.

Below are examples of a tag for monitoring the onboard digital output of the Flexy, a tag for a Siemens PLC and a memory tag.
Examples of creating tags for the different IO servers are available in the PLC area on www.ewon.biz/support and in the IO Servers reference from the *Related Documents, p. 3*.

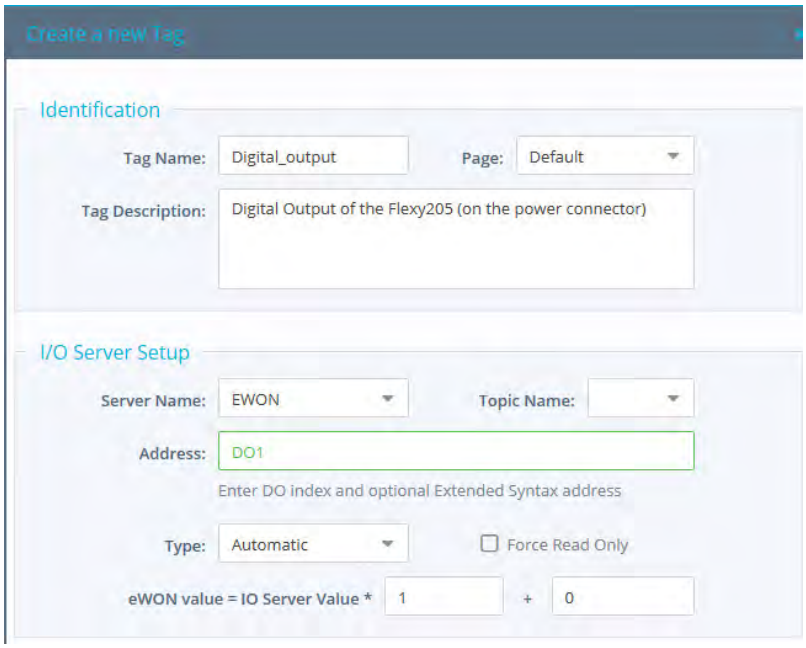

Fig. 3 **Tag Creation — DO.**

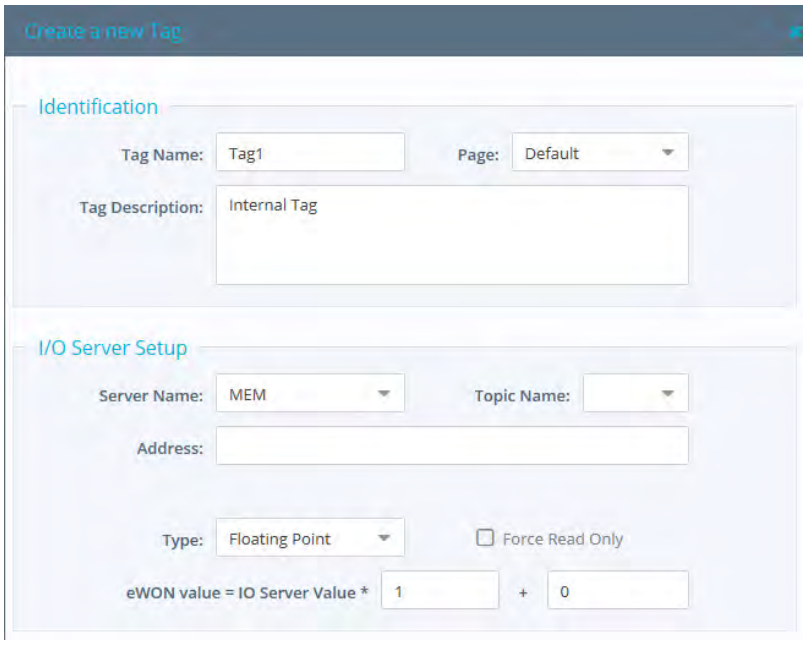

Fig. 4 **Tag Creation — MEM.**

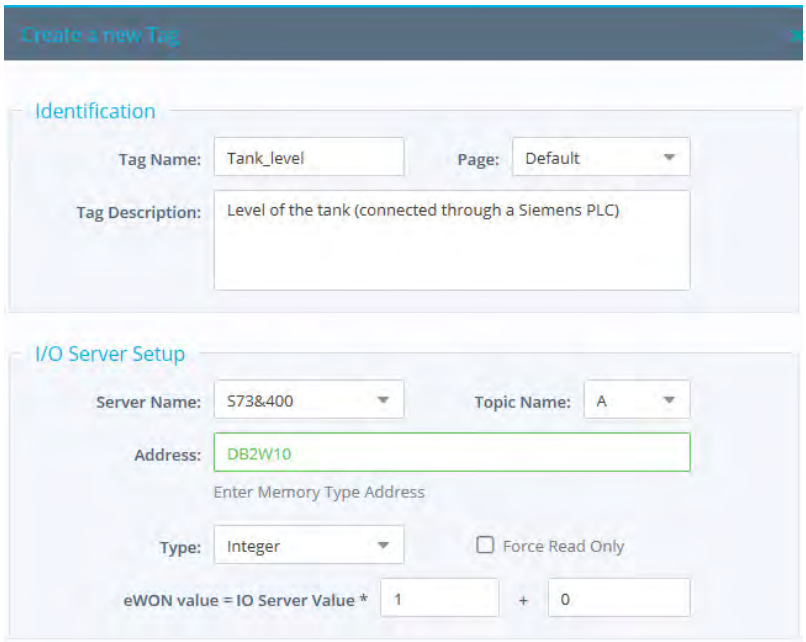

Fig. 5 **Tag Creation — Siemens.**

The Flexy supports different data types for tags: **<Floating Point>**, **<Boolean>**, **<Integer>**, **<DWord>** and **<String>**. If the **<Automatic>** data type is selected, the Flexy will store the tag value in a default data type based on the IO server and tag address as described in the General Reference Guide from the *Related Documents, p. 3*.

> **!** Strings data type are currently in ASCII format and it is supported by OPCUA, S7 and MEM I/O servers. UTF-8 is not supported yet.

Once the tag is configured, click **Add Tag** to create the tag.

6.4 Monitor Tags

6.4.1 Tag Display

The **<VIEW>** mode of the *Tags* ► *Values* page shows the last read value for the tags.

The contents of the page refreshes at the rate shown in the **<Autorefresh>** field in the bottom of the page.

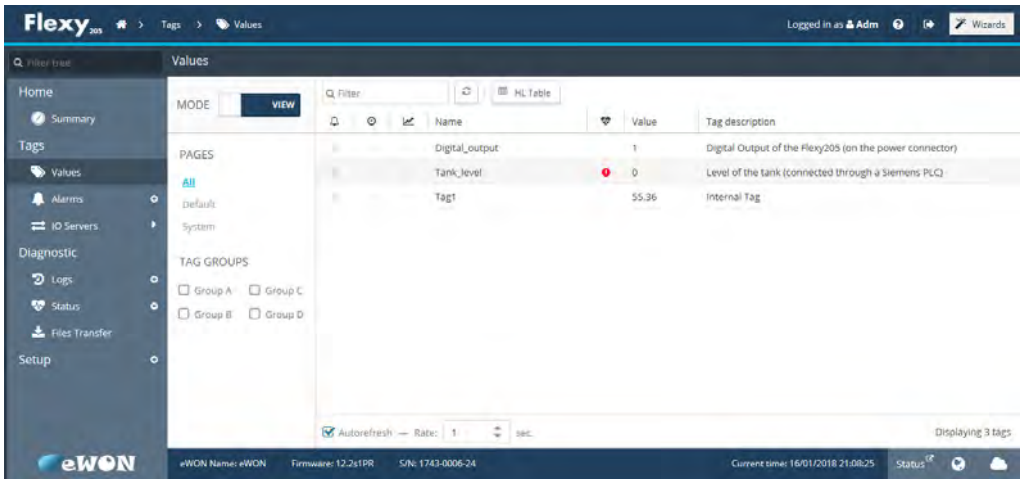

Fig. 6 VIEW mode of the Tags Page.

If the Flexy is unable to read a tag, an red error icon will appear in the tag quality column. Hovering over the icon will display information about why the tag is not being read properly.

Fig. 7 Error on Tag.

6.4.2 Modify the Tag Value

Most tags can be both read from and written to. If a tag is configured to be read-only, a lock icon will appear next to the tag value.
Otherwise, a tag value can be edited by double clicking on it or highlighting the tag and selecting **<Edit Value>**. The changes to all edited tags will be written to the PLC when the **<Apply>** button is pressed.

7 Alarm Management

The Flexy makes it easy to monitor current alarms, to acknowledge alarms, to notify users throughout the alarm cycle and record past alarm events.

7.1 Configure Alarm Settings for a Tag

Alarming is configured on a tag by tag basis.

On the tag configuration page of the *Tags* ► *Values* web page in **<SETUP>** mode, check the **Alarm Enabled** box to expand the alarm setup area.

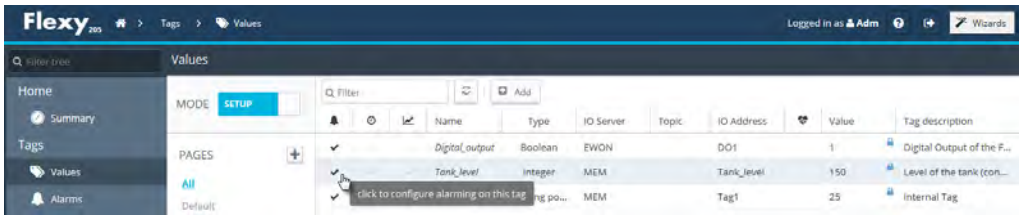

Fig. 8

For boolean tags, use the **<Boolean Alarm Level>** field to specify which tag state triggers an alarm.

For analog tags, four **<Alarm Level>** thresholds are available: **<Low>**, **<High>**, **<LowLow>** and **<HighHigh>**.

The optional alarm hint gives users additional information about this alarm. This hint can appear in alarm notifications.

More information about all the alarm configuration fields is available in the General Reference Guide from the *Related Documents, p. 3*.

Once an alarm is enabled for a tag, a check will appear in the **<Alarm Enabled>** column of the *Tags* ► *Values* page in **<SETUP>** mode.

7.2 Alarm Display

When a tag is in an alarm state, an alarm icon will appear for the tag in the **<Alarm Level>** column of the *Tags* ► *Values* page in **<VIEW>** mode.

When the alarm cycle completes, the icon will disappear.

7.3 Alarm Summary

Clicking on the alarm icon will load the **<Alarm Summary>** page. The **<Alarm Summary>** is also accessible from *Tags* ► *Alarms* ► *Summary*.

The **<Alarm Summary>** page shows all the currently active alarms and their current alarm cycle states.

Alarms can also be acknowledged from the **<Alarm Summary>**.

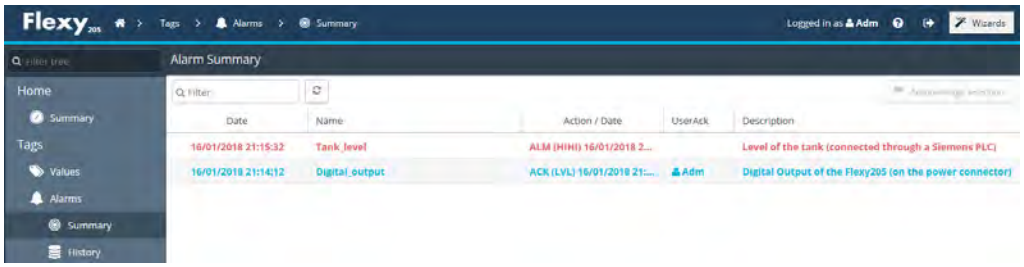

Fig. 9 Alarm Summary Page

7.4 Alarm History

The **<Alarm History>** shows the full alarm cycle of both currently active alarms and past alarms. The **<Alarm History>** is accessible from *Tags* ► *Alarms* ► *History*.

7.5 Alarm Actions

For every tag with alarms enabled, the Flexy can be configured to perform different actions when the alarm cycle state changes.

The actions include sending email, putting a file on an FTP Server and sending an SNMP traps. If the hardware configuration of the Flexy includes a modem extension card, it can send SMS messages as well.

To configure alarm actions for a tag, on the *Tags* ►*Values* page in **<SETUP>** mode, select the tag and press the **Configure Alarm actions** button or click the check in the **<Alarm Enabled>** column.

Information about configuring SMS, FTP and SNMP actions is available in the General Reference Guide from the *Related Documents, p. 3*.

To configure email alarm notifications, begin by selecting those alarm cycle states that should trigger a notification:

- **<ALM>**: when an alarm is raised
- **<ACK>**: when an alarm is acknowledged
- **<RTN>**: when an alarm has returned to a normal state
- **<END>**: When the alarm cycle is finished (**<ACK>** and **<RTN>**)

Next complete the **<Email to>**, **<Email CC>** and**<Email Subject>** fields.

Free text included in the **<Email Attachments>** field will appear in the body of the alarm email message. Files generated by Export Block Descriptors can also be attached to the email message. Export Block Descriptors are explained later in this document.

7.5.1 Configure SMTP Server Settings

Before any email notifications can be sent, the Flexy must have a working Internet connection and it must be configured to communicate with an SMTP server.
SMTP server configuration settings are found under *Setup* ►*System* ►*Main* ►*Net services* ►*SMTP (mails)*.

If the Flexy is configured for Talk2M connections, using the Talk2M Email and SMS relay as the SMTP server is recommended.

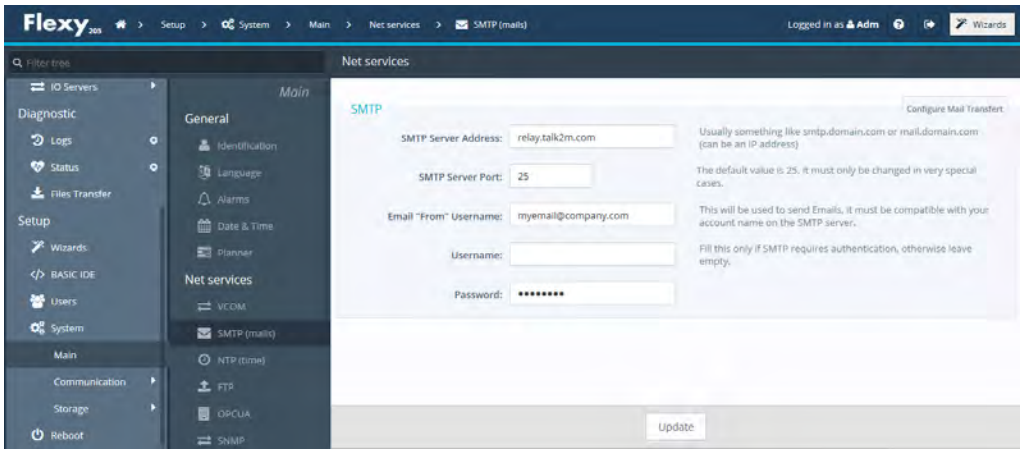

Fig. 10 Example of SMTP Server Settings.

More information about using the Talk2M Email and SMS relay is available in the Email & text message (SMS) relaying using Talk2M reference from the *Related Documents, p. 3*.

Information about configuring connections to different SMTP servers is available in the General Reference Guide from the *Related Documents, p. 3*.

7.5.2 Email Notification Layout

When the Flexy sends out an email notification, it will contain the following information: the name of the tag created, the level, the status and the alarm action or alarm hint.

Fig. 11 Example of Mail Received on Tag Alarm.

If different information is needed, the email contents can be customized using the Email and SMS Alarm Templates. Information about alarm notification customizations is available in Alarm Email & SMS Templates from the *Related Documents, p. 3*.

8 Real-time Logging

Real-time logging records how a tag value changes over time.

Tag values are logged in a circular buffer in volatile memory at regular intervals to show trends over a user defined period of time. Since the values are only stored in memory, they are lost after a reboot.

8.1 Real-time Logging Configuration

To enable real-time logging, check the box marked **<Real Time Logging Enabled>** on the tags configuration page.

The **<Time Span>** field contains the size of the logging window in seconds. By default, it is 600 seconds.

The **<Logging Interval>** field specifies how frequently the values should be recorded. The default value is every 10 seconds.

Once real-time logging is enabled, a check will appear in the real-time logging column for this tag.

8.2 Real-time Graph

The real-time logging information can be viewed as a graph from the *Tags* ►*Values* page in **<VIEW>** mode. Select the tag to view and press the **RT. Graph** button.

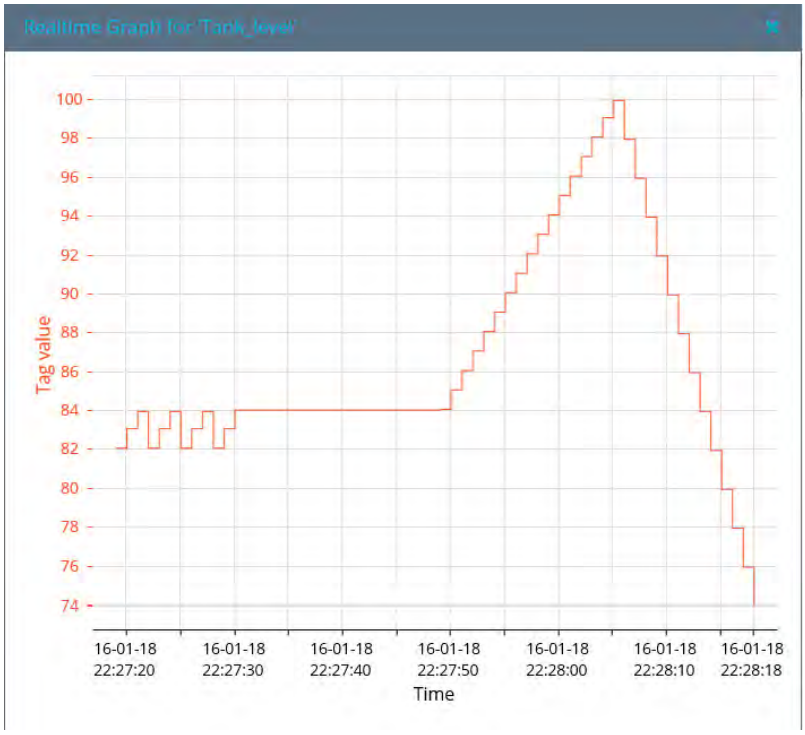

Fig. 12 Real-time Graph

9 Historical Logging

Historical logging stores tag changes for a longer period in a first-in-first-out file in flash file system. Since the values are stored in non-volatile memory, they are not lost after a reboot.

Logging can be triggered by events such as significant data value changes, on a simple interval basis or a combination of the two.

9.1 Historical Logging Configuration

To enable historical logging, check the box marked **Historical Time Logging Enabled** on the tags configuration page. Then select the criteria to use trigger logging.

The **<Logging Deadband>** field triggers logging when the tags value changes by a particular amount. For example, a logging deadband of 2 means that a tag will be logged when the value changes by 2 or more. A negative value in the logging deadband field disables logging on value change.

The **<Logging Interval>** field triggers time based logging. For example, a logging interval of 60 means that the tag will be logged every 60 seconds. A logging interval of 0 disables time based logging.

Once enabled, a check will appear in the historical logging column for this tag.

9.2 Historical Logging Graph

To see the historical log in a graph from the *Tags* ▸ *Values* page in **<VIEW>** mode, select the tag or tags to graph. Multiple tags can be selected using either “Ctrl-click” or “Shift-Click”.

Select the time interval to display and press the **Update Graph** button.

9.3 Historical Logging Table

To see the historical log in a table from the *Tags* ▸ *Values* page in **<VIEW>** mode, press the **HL Table** button. Select the time interval to display.
Use the **<Groups>** checkboxes to limit which tags are included in the table then press the **Update** button.

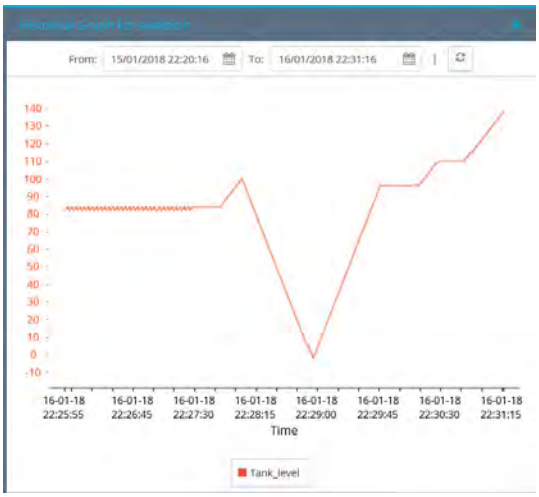

Fig. 13 Historical Logging Graph.

10 Files Transfer Page

Many of the files on the Flexy including the current tag values, the Alarm Summary, the Alarm History, and Historical Logs are available to download from *Diagnostic* ► *Files Transfer*. More information about all the available files is in the General Reference Guide from the *Related Documents, p. 3*.

11 Task Planner

With the Task Planner, the Flexy can perform different actions at specified times or at fixed intervals.

These actions are the same as tag Alarm Actions and include sending an email, sending an SMS, putting a file on an FTP server and sending an SNMP trap.

To specify a task planner entry, begin by describing the times or frequency when the action should occur in the timer interval field. The time is entered in “crontab” format as described in the General Reference Guide from the *Related Documents, p. 3*.

Example of CRON based format	
Example	**Meaning**
* * * * *	will do an action every minute
0 * * * *	will do an action every hour
0 0 * * *	will do an action every day at midnight (00:00)
*/15 * * * *	will do an action every 15 minutes
15 7 1 1 *	will do an action at 7:15, the first of January. Equal to ’15 7 1 jan *’
15 8 * * 1	will do an action at 8:15, each Monday. Equal to ’15 8 * * mon’
0 8-18 * * 1-5	will do an action at every hour between 8:00 and 18:00 on every working day (Monday to Friday)
0 6,7,8,17,18,19 * * *	will do an action at 6, 7, 8, 17, 18 and 19 o’clock every day
* * 13 * fri	will do an action at every minutes on each Friday OR the 13th of the month (and not only on the Friday 13th)

Once the timer interval has been specified, select the **Edit** button to specify the action or actions that should occur. Check the **Enable** checkbox for each desired actions and complete the action configuration in the same fashion as the alarm actions described above.

For example: to configure a file to be put on an FTP server, check the **Enable** checkbox for the **<Put FTP upon>** action. In the **<Destination>** field, enter the file to create on the destination FTP server. The file name can include a path specification. In the **<File Content>** field, enter either free text or enter one or more Export Block Descriptors. Export Block Descriptors are explained later in this document.

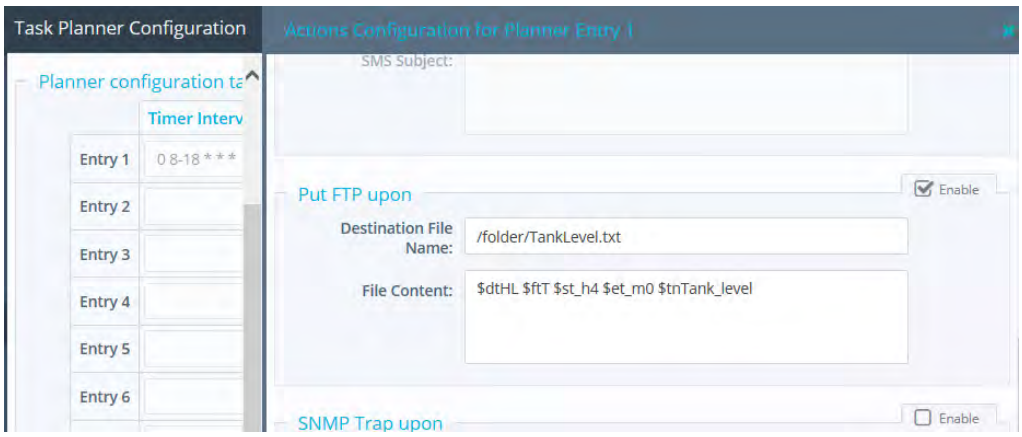

Fig. 14 Task Planner Settings for FTP.

11.1 Configure FTP Server Settings

Before any files can be put on an FTP server through the Task Planner, the Flexy must have a working Internet connection and it must be configured to communicate with an FTP server.

FTP server configuration settings are found under *Setup* ►*System* ►*Main* ►*Net services* ►*FTP*.

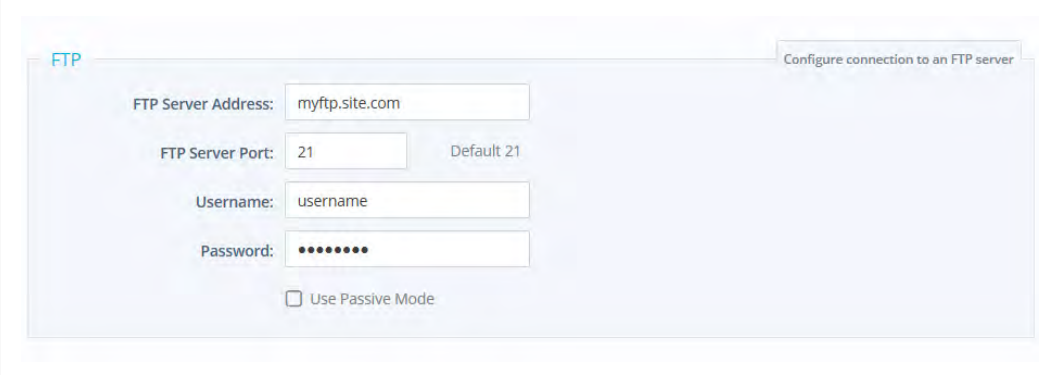

Fig. 15 FTP Server Configuration.

More information about configuring the Task Planner and communicating with an FTP server is available in the General Reference Guide from the *Related Documents, p. 3*.

12 Tag Publishing

In addition to polling tags from external devices, the Flexy can publish tag values.

With this feature, external software and devices can read tag values from the Flexy. The Flexy supports tag publishing tag values over Modbus TCP, SNMP, and OPCUA. Check the *Related Documents, p. 3* for more info on publishing those protocols.

13 Data Management

The Flexy supports exporting data to a variety of data management platforms. If the Flexy is configured to connect to Talk2M, the Talk2M API (feature of Talk2M) makes it easy to share data with many different platforms.

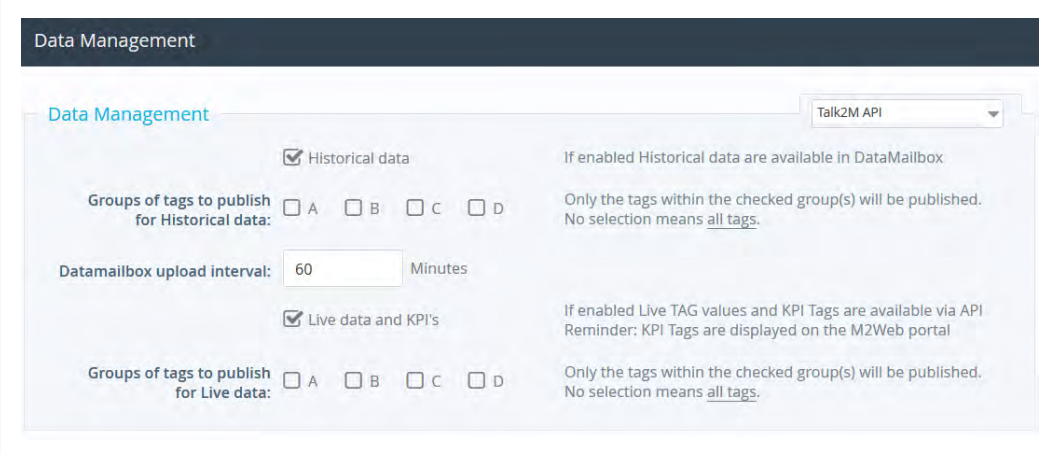

Fig. 16 Data Management for Talk2M API, Live data and KPI's.

13.1 Talk2M API

To configure the Flexy to send data to the Talk2M API, navigate to *Setup ►System ►Main ►Data Management*.

1. Select the **Talk2M API** option from the dropdown menu
2. Select the **Historical data** option
3. Use the **Select tag group(s)** checkboxes to restrict which tags should be included. Leaving them all unchecked will include all tags.
4. In the **<Upload interval>** field, enter how frequently data should be sent to the Talk2M API.
5. Press the **Update** button to save the configuration.

More information about Talk2M API and other data export methods is available on www.ewon.biz/support.

13.2 Live data and KPI's

To configure the Flexy to publish the KPI's in the M2Web portal and the Live data, navigate to *Setup ►System ►Main ►Data Management*

1. Select the **Talk2M API** option from the dropdown menu
2. Select the **Live data and KPI's** option
3. Use the **Select tag group(s)** checkboxes to restrict which tags should be included. Leaving them all unchecked will include all tags.
4. Press the **Update** button to save the configuration.

14 NAT 1:1

Under some circumstances, devices on the WAN or VPN network of the Flexy could need access to devices on the LAN network of the Flexy. By enabling the NAT 1:1 feature, addresses on one network can be mapped to addresses on the other. Once the addresses are mapped, devices on the LAN network of the Flexy can be accessed without complex networking changes.

The NAT 1:1 feature is enabled from *Setup* ►*System* ►*Communication* ►*Networking* ►*Routing*. Check the **Enabled** checkbox in the NAT 1:1 section to enable it and expand the mapping table.

From the **<Mapping>** dropdown menu, select NAT 1:1 on WAN or NAT 1:1 on VPN as appropriate.

LAN device addresses and their corresponding mapped addresses on the other network should be encoded in the route table.

Before configuring the NAT 1:1 feature, check with the local IT manager about which IP addresses are available and can be used and reserved for the NAT 1:1 feature of the Flexy. As these IP addresses are not assigned by the DHCP server, address conflicts can occur.

Instructions for configuring NAT 1:1 for the Flexy are available in the General Reference Guide from the *Related Documents, p. 3*.

15 Custom Web Pages

The Flexy has a web server to host its own internal web pages. In addition, the Flexy can support user created web pages.

The Flexy can host custom HTML pages including special forms and server side includes that allow users to display and interact with tags and other data of the Flexy. Information about building custom web pages is available from our developer.ewon.biz.

Alternatively, the viewOn companion tool is a graphical development environment for creating animated HMI pages for the Flexy. Using the built in graphical objects and animations, users can easily create dynamic webpages even with no previous web development experience.

ViewON and information about getting started with ViewON is available on www.ewon.biz/support.

The Flexy can be configured to display a custom web page as its homepage instead of its standard homepage. The user defined home page is set from *Setup* ►*System* ►*Main* ►*General* ►*Identification*.

16 Backup and Restore

Backups can be created and restored using the eBuddy companion tool.

To create or restore a backup:

1. Open eBuddy and select Backup/Restore from the menu bar.
2. On the following window, select backup or restore and click **Next**.
3. On the **<Ewon Identification>** window, specify the serial number or IP address of the appropriate Flexy and enter its appropriate administrator credentials.
4. When creating a backup, select a filename and location to save the backup file in the **<Filename>** field.

   To restore a backup, select the backup to restore.
5. Click **Next** to complete the process.

The backup is saved as a .tar file. This file contains the /usr directory, a comcfg.txt file, a config.txt file, and a program.bas file.

17 Other Configuration Mechanisms

The Flexy can be configured through its web interface or by restoring a backup of a previously saved configuration with eBuddy. In addition, the Flexy can be configured through other mechanisms including FTP and using an SD card.

17.1 FTP

Every Flexy can be used as both an FTP server and an FTP client.

This allows data and configuration files to be retrieved and loaded by FTP on to the Flexy. When a correctly named configuration file is put on the Flexy by FTP, it will analyze the file. If the syntax of the file is correct, it will perform the corresponding configuration changes.

Configuration files that can be loaded onto the Flexy include the comcfg.txt file, the config.txt file, the program.bas file and the contents of the /usr directory including custom web pages.

- The config.txt file contains general information about the Flexy including the various IO server settings and all tags and users.
- The comcfg.txt file contains the communication settings for the Flexy including its LAN IP address and its Internet connection settings.
- The program.bas file contains any BASIC scripts from the Flexy.

If changes are made to one of these files and then the file is put on the Flexy using FTP, those changes will be applied to the Flexy.

Additional information about configuring the Flexy with FTP is available in Configure your Ewon using FTP from the *Related Documents, p. 3*.

17.2 SD Card

The Flexy includes an integrated SD card reader.

An SD card can be used to upgrade or downgrade the firmware of the Flexy, restore a backup made through eBuddy, register a Flexy to a Talk2M account using a Talk2M Global Registration key and to modify communication settings with a comcfg.txt file.

Information about modifying a Flexy using an SD card is available in Ewon Configured by SD Card from the *Related Documents, p. 3*.

18 Export Block Descriptors

Export Block Descriptors can be used to export data from the Flexy.
For example:, they can be used with Alarm Actions or Task Planner entries to include information such as historical logs and current tag values inside or attached to an email.

An Export Block Descriptor is a string of characters describing the data to export using a predefined syntax. Typically the Export Block Descriptor includes information about:

- Which data to export (Event log, Historical logging, etc.)
- How to format the exported data (Binary, Text, HTML table, Graph)
- The start time
- The end time
- Which tags are concerned
- ...

For example: the following Export Block Descriptor will extract the historical logging of the last 4 hours of tag **<A1>** and represent the result in text format: `$dtHL $ftT $st_h4 $et_m0 $tnA1`.

If this Export Block Descriptor is added to the email for the alarm notification, then the user will receive an alarm notification containing the historical data of the last 4 hours in a text format. This will allow the user to make a more precise analysis of the alarm situation.

For a detailed explanation about the use of the Export Block Descriptor please refer to the Export Block Descriptor reference in the *Related Documents, p. 3*.

19 Scripting

The Flexy supports custom programs using scripting language similar to BASIC with many specific extensions. With scripting, users can:

- Create customized reports.
- Let users acknowledge alarms by SMS.
- Dynamically adjust communication parameters such as the Internet interface.
- Push data to an external web server on a scheduled basis.

Information about programming on the Flexy as well as a large library of code examples is available on developer.ewon.biz.

20 User Management

At initial configuration, a Flexy has a single user with username **<adm>**. This user has full administrator rights on the Flexy.

However, the Flexy 205 can support multiple users with their own unique user rights.

Users are added, modified, and deleted from *Setup* ►*Users*. To add a user, press the **Add** button.

Users are required to have a User Login which is unique to this user and a password. Other **<Identification>** fields are optional.

In the **<Rights>** section, select the user rights that are right for this user's role. For example: if this user should be able to see tag values and acknowledge alarms but should not be able to change the configuration of the Flexy, make sure that **<View IO>** and **<Acknowledge Alarms>** are checked and **<Change Configuration>** is unchecked.

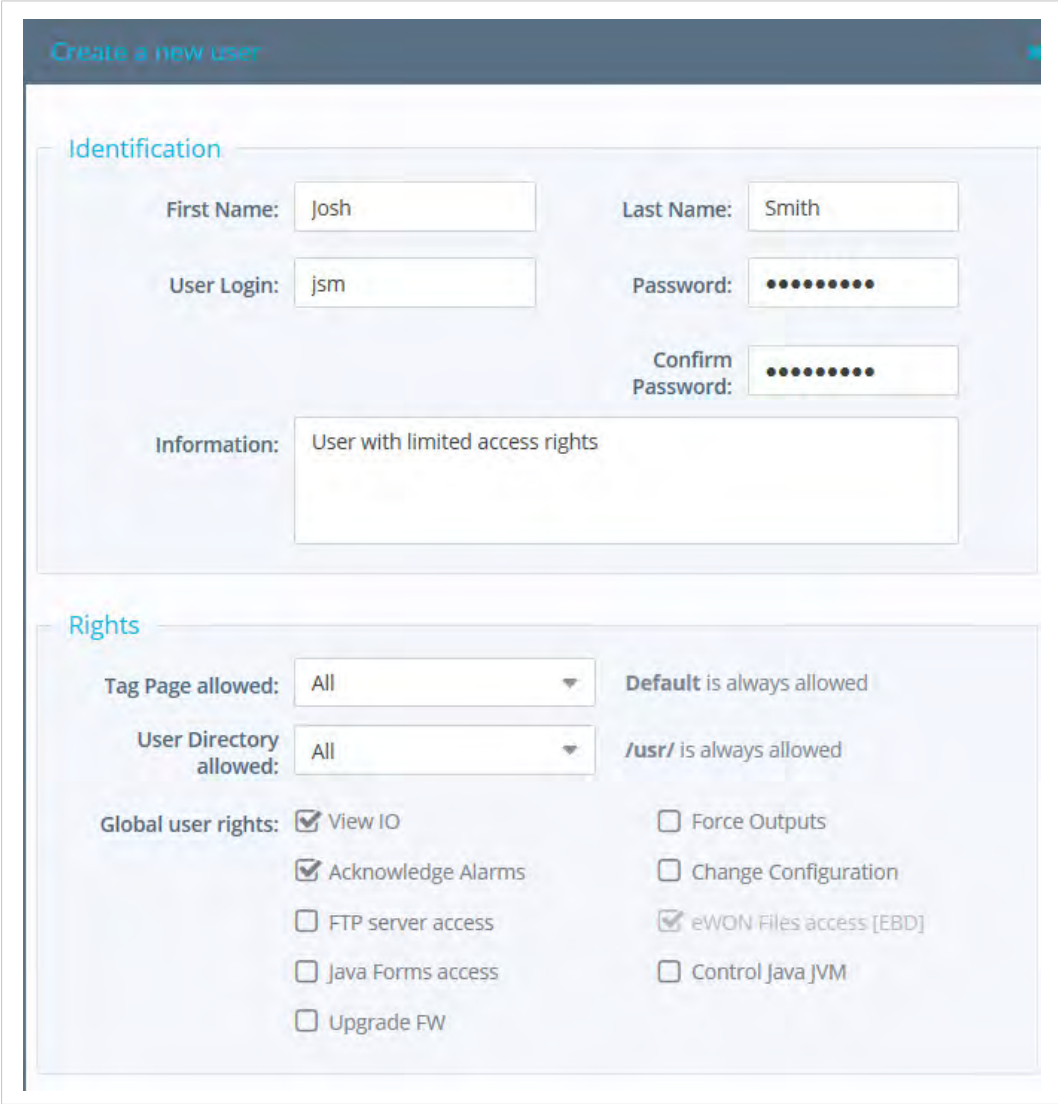

Fig. 17 Creation of a User with Limited Access.

More information about managing users and about specific user rights is available in the General Reference Guide from the *Related Documents, p. 3*.

21 Troubleshooting

The Flexy provides a number of tools for quickly troubleshooting problems that may occur.

21.1 Summary Page

The Summary page shows at a glance information about the health and status of the Flexy. Its current Internet connection and VPN connection status, date and time, and firmware versions are all displayed.

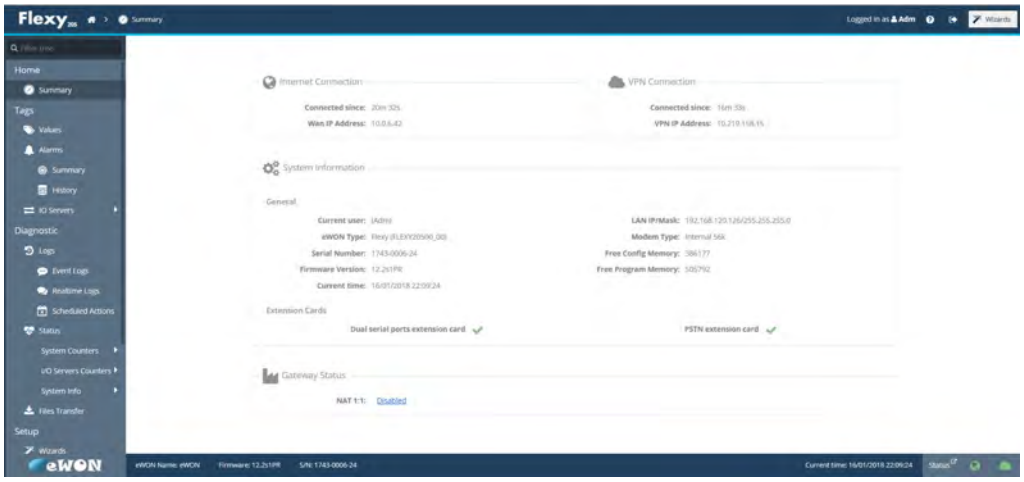

Fig. 18 Troubleshooting Summary Page is the Homepage.

21.2 Event Log

The Event Log records significant system events on the Flexy.

Events are given one of three severity levels: **<Error>**, **<Warning>** or **<Trace>** and color coded correspondingly.

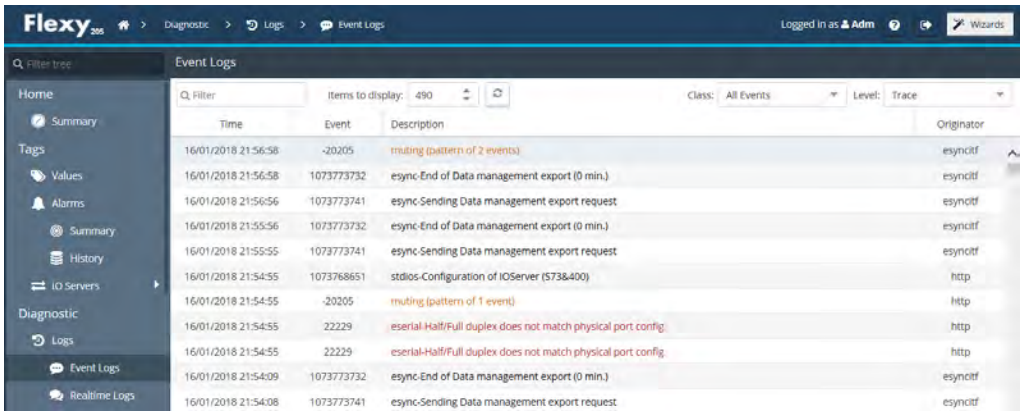

Fig. 19 Troubleshooting through Event Logs.

Each event also includes an event number or error code. Information about these error codes and the most common causes is available on www.ewon.biz/support.

21.3 Scheduled Actions

The Scheduled Actions log shows the states of the last 20 outgoing actions like SendMail, putFTP, getFTP, NTPSyncro, SendSMS, and SNMPTrap.

If an error occurs during an action, the Scheduled Actions record will include an error code to help identify the source of the problem.

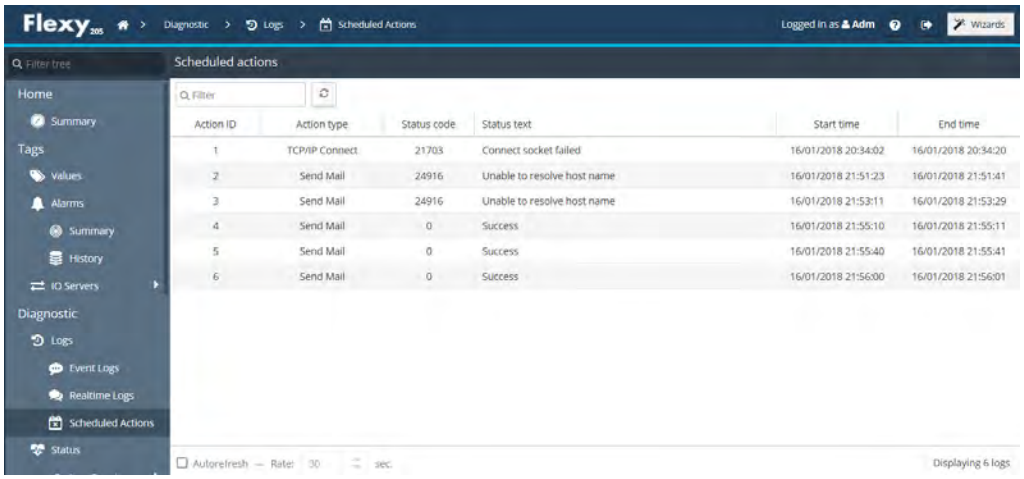

Fig. 20 Troubleshooting of Scheduled Actions.

This page intentionally left blank

© 2019 HMS Industrial Networks
Box 4126
300 04 Halmstad, Sweden

info@hms.se

FLB 3205 – 4G (NA) Extension Card

INSTALLATION GUIDE

IG-0027-00 1.1 en-US ENGLISH

Important User Information

Disclaimer

The information in this document is for informational purposes only. Please inform HMS Industrial Networks of any inaccuracies or omissions found in this document. HMS Industrial Networks disclaims any responsibility or liability for any errors that may appear in this document.

HMS Industrial Networks reserves the right to modify its products in line with its policy of continuous product development. The information in this document shall therefore not be construed as a commitment on the part of HMS Industrial Networks and is subject to change without notice. HMS Industrial Networks makes no commitment to update or keep current the information in this document.

The data, examples and illustrations found in this document are included for illustrative purposes and are only intended to help improve understanding of the functionality and handling of the product. In view of the wide range of possible applications of the product, and because of the many variables and requirements associated with any particular implementation, HMS Industrial Networks cannot assume responsibility or liability for actual use based on the data, examples or illustrations included in this document nor for any damages incurred during installation of the product. Those responsible for the use of the product must acquire sufficient knowledge in order to ensure that the product is used correctly in their specific application and that the application meets all performance and safety requirements including any applicable laws, regulations, codes and standards. Further, HMS Industrial Networks will under no circumstances assume liability or responsibility for any problems that may arise as a result from the use of undocumented features or functional side effects found outside the documented scope of the product. The effects caused by any direct or indirect use of such aspects of the product are undefined and may include e.g. compatibility issues and stability issues.

Table of Contents

Page

1 Preface 3

1.1 About This Document 3

1.2 Document history 3

1.3 Related Documents 3

1.4 Trademark Information 3

2 Product Summary 4

3 Safety, Environmental & Regulatory Information 5

3.1 Scope 5

3.2 ESD Damage Prevention 5

3.3 Applicable Directives, Standards and Compliances 5

3.4 Official Modem Identification 6

4 Hardware Description 7

4.1 Mechanical Layout and Interfaces 7

4.2 Extension Card Label 7

4.3 Front Panel LEDs 8

4.4 Specifications of the LTE Extension Card 9

4.5 Ewon Flexy Extension Card Environmental Conditions 9

5 Plug the FLB 3205 into the Base Unit 10

5.1 Base Unit Slot Compatibility 10

5.2 SIM Card Insertion 12

5.3 Extension Card Insertion 13

6 Powering on the Base Unit with its Extension Cards 16

7 Check Card Detection on the Embedded Web Page 17

7.1 Connecting to the Embedded Web Server 17

7.2 Detected Cards Displayed in the System Page 17

7.3 Modem Information Displayed in the Information Page 17

A Antenna Information 19

This page intentionally left blank

1 Preface

1.1 About This Document

This document describes the hardware of the FLB 3205 - 4G (NA) extension card which belongs to the Ewon Flexy family

The Ewon Flexy family is a range of modular industrial gateway/router and as its name *Ewon Flexy* suggests, it has been designed to enable numerous different combinations of base units with extension cards.

For additional related documentation and file downloads, please visit www.ewon.biz/support.

1.2 Document history

Version	Date	Description
1.0	2017-10-23	First release
1.1	2019-09-03	Changed: *Safety, Environmental & Regulatory Information, p. 5* Changed: *Ewon Flexy Extension Card Environmental Conditions, p. 9*

1.3 Related Documents

Document	Author	Document ID
Ewon Flexy - Base Units	HMS	IG-0014-00
Ewon Flexy 205	HMS	IG-0028-00
Omni-directional antenna 4G - 3G - 2G	HMS	KB-0274-00

1.4 Trademark Information

Ewon® is a registered trademark of HMS Industrial Networks SA. All other trademarks mentioned in this document are the property of their respective holders.

2 Product Summary

The present Installation Guide is focusing on the FLB 3205 - 4G (NA) extension card which, as such, needs to be inserted in one of the Flexy base units to work.

The base units have their own Installation Guide which can be found in the *Related Documents, p. 3*.

This guide also addresses shortly how the extension cards integrate the base units as well as some recommendations on how to mount them. See *Base Unit Slot Compatibility, p. 10* for more details.

3 Safety, Environmental & Regulatory Information

3.1 Scope

The present heading addresses Safety, Environmental & Regulatory Information about the FLB 3205 - 4G (NA) extension card.

This extension card belongs to the same compliance frame than the base units. In the present case of a telecommunication extension card, additional directives, standards and instructions apply.

3.2 ESD Damage Prevention

!	Always use ESD precautions when handling extension cards and / or opened base unit as they contain parts and assemblies susceptible to be damaged by electrostatic discharge (ESD).

The extension card described in this document is a module exposing both sides of an electronic printed circuit board. Therefore, it is packed in an antistatic ESD bag. In order to avoid ESD damage, the product must be handled with the necessary precaution including:

- Grounded ESD protective work surface
- Personnel grounding

3.3 Applicable Directives, Standards and Compliances

The FLB 3205 complies with the FCC regulations related to the wireless modems.

The FLB 3205 belongs to class A Information Technology Equipment (ITE). In a domestic environment this product may cause radio interference in which case the user may be required to take appropriate measures.

3.3.1 Applicable Safety Standards

The FLB 3205 is in conformity with the following safety standards:

- IEC / EN 60950-1
- UL 60950-1
- CSA-C22.2 No 60950-1-07
- EN/IEC 62368-1
- UL 62368-1
- CAN 62368-1

3.3.2 FCC compliance

The FLB 3205 complies with Part 15B, 22H, 24E and 27 of the FCC Rules. Operating is subject to the following two conditions:

- This product may not cause harmful interference
- This product must accept any interference received, including interference that may cause undesired operation.

3.3.3 Certifications

The FLB 3205 has been certified by authorized bodies:

- UL Certificate of Compliance (COC) # 20190529_E350576
- CB certificate # DK-84039-UL

These certificates can be downloaded as PDF files on the Ewon support web site: www.ewon.biz/support

3.4 Official Modem Identification

This product contains part identified as follows by national authorities:

- FCC ID: RI7LE910NAV2
- IC ID: 5131A-LE910NAV2

4 Hardware Description

4.1 Mechanical Layout and Interfaces

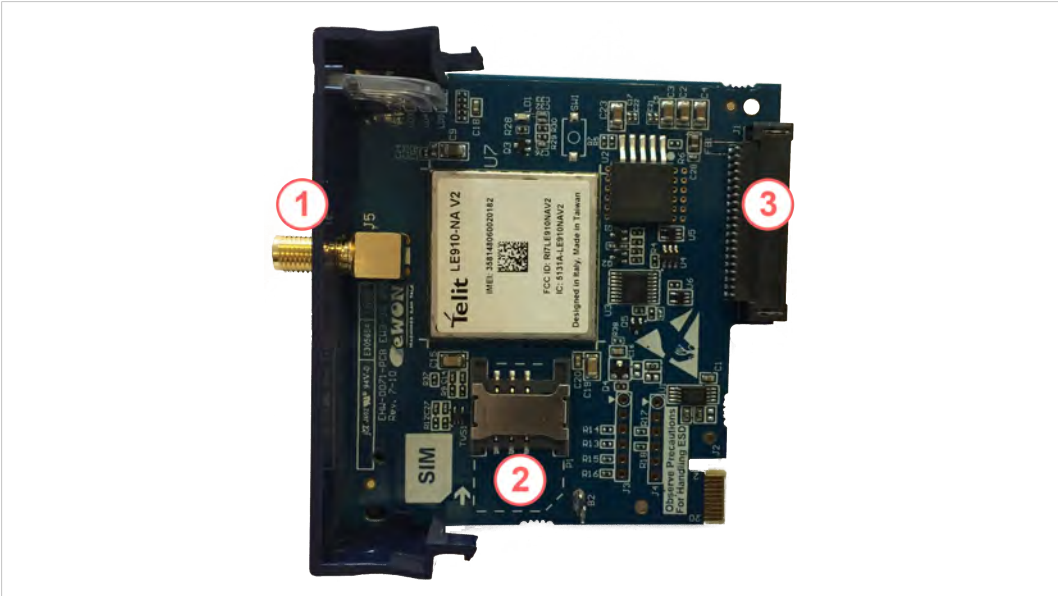

Fig. 1 Mechanical layout and interfaces

1	SMA-F Female antenna connector
2	SIM card drawer
3	Backplane connector

4.2 Extension Card Label

4.2.1 Label Location and Included Information

The identification label of the extension cards is placed on the solder side of the PCB.

The different parts of the label are described below:

Label	Description
PN	Part Number (see syntax table below)
SN	Serial Number in the form: **MMMM-YYWW-SSSS-PP** • MMMM : MTID (product related) • YYWW : Year and week • SSSS : Sequential manufacturing order • PP : Product type
Marks	CE, UL... certification number and logos if applicable

Fig. 2 FLB 3205 label

4.2.2 Part Number Structure for Extension Cards

FLYXXXX_00/S				
FL	FL is the prefix for the extensions of the Ewon Flexy family	Only FL (constant)		
Y	1 alphabetic sign (CAP) Defines the slots of the base module in which the extension card can be inserted.	A	2 first slots only	●●○○
		B	2 last slots only	○○●●
		X	Any slots	●●●●
		C	Any slots. Available for Flexy 205 only.	○○○○
XXXX_00	The extension card type. The suffix _00 is used for software options.			
/S	The suffix might have an optional “/” character It might also be blank or include “S” character => Indicates compliance with the UL/IEC/EN 60950 standard.			

4.3 Front Panel LEDs

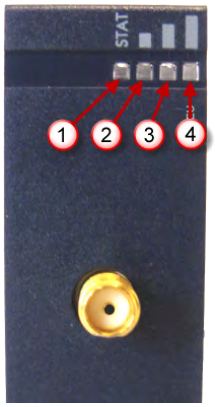

Fig. 3 Front Panel Leds

Item	Mark	Function
1	STAT	Tricolor: Red / Orange / Green Green ON = Modem is online
2	▪	Reception Signal level Orange ON = level > 1 (poor signal)
3	▪▪	Reception Signal level Orange ON = level > 10 (signal ok)
4	▪▪▪	Reception Signal level Orange ON = level > 16 (good signal)

The LEDs represent only the signal level and not the type of technology used to perform a connection.

During the modem boot process, all 4 LEDs are steady orange. If they stay orange, it means the modem card was inserted in a wrong slot. This induces a base unit boot error pattern on its USR LED as well.

If all signal level LEDs are off, it either means that:

- the modem was not configured
- the modem configuration is invalid (including wrong PIN-code)

- there is no signal at all (level 0)
- there is a reception error (level 99)

4.4 Specifications of the LTE Extension Card

Item	Value(s)	
Bands & Frequencies	• LTE – 700MHz (B12/B13/B17), 850MHz (B5), 1700MHz (B4), 1900MHz (B2) • UMTS/HSUPA – 850Mhz (B5), 1900MHz (B2)	
Tx Output Power	LTE all Bands: Class 3 (0.2W) ; WCDMA All Bands: Class 3 (0.25W)	
Antenna Connector	Type SMA-F Female	
Antenna (not included in the delivery)	**Characteristic**	**Value(s)**
	Impedance	50 Ohms
	VSWR	<= 2:1
	Input Power	> 24 dBm average power
	Tightening Torque	0.5 Nm *In the absence of a torque wrench, a soft manual tightening is sufficient.*
Device conformity has been tested with the reference antenna: Panorama B4BE-7–27		

Absolute maximum antenna gain as per FCC's rules and regulations, 47 CFR :

- 700 & 850 MHz: 6.63 dBi
- 1700 MHz: 6 dBi
- 1900 MHz: 8.51 dBi

> **!** This device is intended to be used only in fixed applications. The antenna used for this transmitter has to be installed to provide a distance of at least 20 cm from any person and may not be co-located or operating in conjunction with any other antenna or transmitter.

4.4.1 Isolation Scheme

In the Installation Guide: “eWON Flexy - Base Units” quoted in the Related Documents, details on the isolation scheme of the Flexy base units and the different extension cards can be found.

4.5 Ewon Flexy Extension Card Environmental Conditions

Characteristics	Value
Operating Temperature	-25 to +60°C
Storage temperature	-40 to +70°C
Relative humidity	10 to 95% non-condensing
Operating altitude	Up to maximum 2000m
Storage altitude	Up to maximum 3000m

5 Plug the FLB 3205 into the Base Unit

5.1 Base Unit Slot Compatibility

The FLB 3205 must be inserted in one of the “B” slots of the base unit.

The reference code of the extension cards includes a letter defining their compatibility:

- FL**B** xxxx: designate cards that fit into “B” slots.

In addition to the card reference, each type of extension card bears a visual compatibility symbol on its front panel:

Design	Slot Type	Flexy 205 Location	Flexy 10x & 20x
○○●●	B	Any slot	2 last slots only

5.1.1 Ewon Flexy 205

As the Flexy 205 has room for 2 slots, the type slot compatibility rule doesn’t apply. The FLB 3205 can be inserted in both slots.

Fig. 4 Position of the “B” Slots on a Flexy 205.

5.1.2 Ewon Flexy 10x & 20x

The FLB 3205 must be inserted in the “B” slots which are the two slots on the far right of the Flexy 10x & 20x.

Fig. 5 Position of the "B" Slots on a Flexy 10x & 20x.

!	Cards that fit only in one slot type have a mechanical mistake-proof security to prevent them from being inserted in an incorrect slot type.

5.2 SIM Card Insertion

A SIM card obtained from a wireless phone provider is necessary to communicate through the FLB 3205.

It must be inserted before inserting the extension card in the base unit as there is no external access to the SIM card holder.

The SIM card holder is located on the components side of the extension card. Carefully slide the SIM card in the holder as shown in the picture below. Make sure the card is fully inserted against its arrest, otherwise it could damage both the drawer and the SIM card when the extension card will be inserted in the base unit. Note the position of the cutoff (1) of the SIM card.

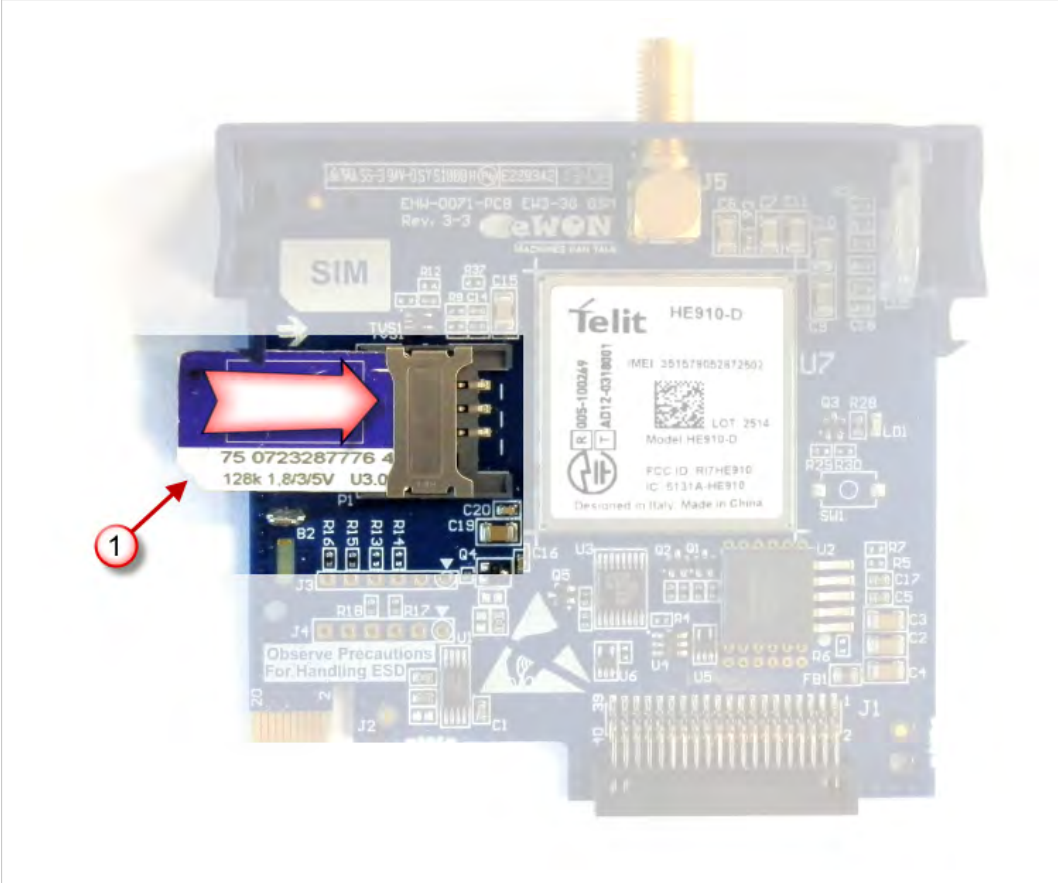

Fig. 6 SIM location on the FLB 3205

5.3 Extension Card Insertion

5.3.1 How to Insert into the Flexy Base Unit

Wait 30 seconds after turning off the equipment before inserting (or removing) an extension card to avoid possible damage to the base unit and the extension cards.

Remove the slot filler of the location the new card will be inserted. To do so, press on both ends of the cover, note that the hooks are off-centered.

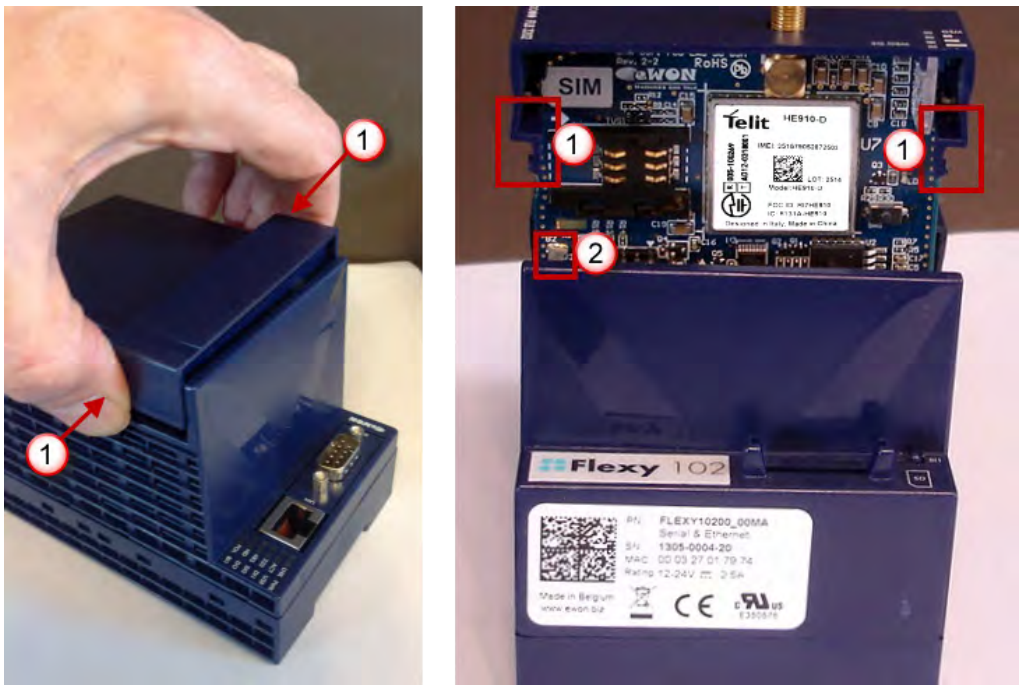

Fig. 7 Remove the slot fillers

1	Hooks to be pressed are off-centered. Press while pulling upwards
2	This metal tag soldered on the PCB acts as mistake-proof security (mating stop in housing). Doesn't apply on Flexy 205.

Insert the extension card carefully and slide it down until the hook clicks. Make sure the card is completely inserted. **DO NOT insist** if a resistance is felt when trying to insert the card.

Boot the unit for the inserted extension cards to be detected. The web interface of the Flexy 205 has a diagnostic page showing the extension cards in their order of detection (from left to right).

*If an extension card is inadvertently forced in a wrong slot, the base unit will detect the misplaced card and will **not** complete its boot process. Therefore, the unit will not be accessible through its LAN interface. The slot error is returned by the USR LED. (red ON 1 sec, OFF 0.5 sec).*

The wrong slot insertion doesn't concern the Flexy 205.

5.3.2 Insertion of Multiple FLB 3205

Detection Order

The boot sequence of the base unit includes an automated detection of the inserted extension cards. This detection is done sequentially, slot per slot starting from left to right (when holding the base unit with its logo on the right side).

Software Compatibility

The base unit allows the insertion of multiple extension cards, sometimes of the same type. Some configurations including multiple extension cards, even if mechanically acceptable, are not supported by the embedded software. Cards in excess are ignored during the automated detection process which means that the base unit and its running extension cards will operate normally.

The Flexy firmware currently supports up to **1** FLB 3205.

The ignored card(s) will appear in the **Diagnostic** > **Status** > **System Info** > **System** but they will not be functional.

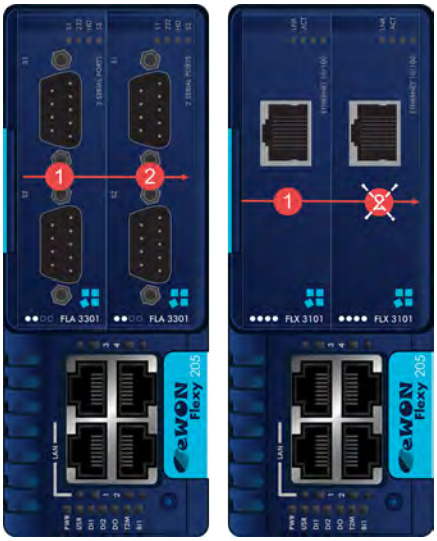

Fig. 8 Order of the Extension Cards

The picture above shows an example of a configuration that would be OK mechanically and power wise but would not be supported by the firmware.

During the boot process, the first 2 serial port extension cards are detected and both can be used.

In case of 2 single Ethernet cards, these 2 cards are also detected but the second Ethernet card is not supported by the firmware and cannot be used. The presence of this “ignored” card in the base unit does not alter the operation of the base unit itself nor does it alter its “accepted” extension cards.

5.3.3 Power Requirements

> **!** The “Power Requirements” concept doesn’t apply to Flexy 205 and its inserted extension cards.

The internal power converter of the Flexy base units has been dimensioned to cover a broad range of different combinations of extension cards. Users should make sure the total power

demand of the extension cards does not exceed the capabilities of the base unit. That is why the notion of “Energy Points” has been introduced.

The Installation Guide “eWON Flexy - Base Units” includes a section giving the **Available Energy Points** of each type of base unit.

The power requirements of each extension card is expressed in **Energy Demand Points.** This number is meant to check whether the balance with the **Available Energy Points** of a given base unit with extension cards is OK or not.

The Energy Demand Points of the FLB 3205 is **8**

The Installation Guide of the “eWON Flexy - Base Units” also includes examples of practical power balance calculations.

6 Powering on the Base Unit with its Extension Cards

When the base unit is powered on, it takes approximately 25 seconds for the unit to go through its self-test procedure. The slots in which the extension cards have been inserted and their type are detected during this process.

If the boot process completes normally, the following LED status should be observed:

- Base unit : **USR** LED flashing green slowly
- Extension card : None

> **!** If the **USR** LED of the base unit is flashing red, it might be because the extension card was improperly inserted (for example in a wrong slot).

7 Check Card Detection on the Embedded Web Page

The Flexy extension cards require no software configuration. They are automatically detected by the base unit when the device boots.

7.1 Connecting to the Embedded Web Server

Configure the network parameters to set the computer being used to reach the web interface on the same IP range than the LAN of the Ewon device.

Once both devices are in the same IP range, connect the PC to one of the LAN port of the Ewon device.

Open an Internet browser and access the homepage of the Ewon device by typing the LAN IP address in the URL field (the default address is http://10.0.0.53).

A dialog box will pop-up asking for credentials. Default ones are:

- login: adm
- password: adm

> **!** For security reasons, changing the default password *adm* is an absolute requirement. To change it, from the menu bar, click on ***Setup > Users*** and double click on the *adm* entry to edit and save its password.

7.2 Detected Cards Displayed in the System Page

Once connected to the embedded web pages of the Ewon device, the homepage displays the system status including detected extension cards.

To access in details the system status summary, click on ***Diagnostic > Status > System Info > System***.

7.3 Modem Information Displayed in the Information Page

Extended information about the modem - including manufacturer, type and modem firmware version - is available in the ***Info*** page. The path to the ***Info*** page is: ***Diagnostic > Status > System Info > Info*** .

This page intentionally left blank

A Antenna Information

For more general & technical information concerning the antenna that can be combined with the FLB 3205, refer to the Knowledge Base: “Omni-directional antenna 4G - 3G - 2G” quoted in the *Related Documents, p. 3*.

© 2019 HMS Industrial Networks
Box 4126
300 04 Halmstad, Sweden

info@hms.se
IG-0027-00 1.1 en-US / 2019-09-03 / 14616

Easy startup with I/O mapping - the Radioline wireless system

Radioline is the transmission system from Phoenix Contact for extended systems and networks with up to 250 stations.

Radioline transmits I/O signals as well as serial data and is therefore very versatile. In addition, you can implement various network structures: from a simple point-to-point connection to complex mesh networks.

Thanks to the latest Trusted Wireless technology, Radioline is the ideal choice for industrial use.

Network applications

– I/O data mode: simple I/O signal distribution in the network
– PLC/Modbus RTU mode: I/O integration in the control level using the Modbus protocol
– Serial data mode: networking of controllers and serial I/O devices, simple RS-232/RS-485 cable replacement

What advantages does I/O mapping offer?

I/O mapping makes it considerably easier to assign input and output signals in your systems. With a slight turn of the thumb wheel, you can distribute and multiply I/O signals freely in your network – without the need for any complex programming.

Trusted Wireless

Trusted Wireless technology is specifically designed for the reliable transmission of data and signals over long distances.

The new Version 2.0 also offers functions such as adjustable data rates, encryption, extended diagnostics, and parallel operation of multiple networks.

The range* depends on the wireless system selected:
– 2.4 GHz - up to 5 km
– 868 MHz - up to 20 km
– 900 MHz - up to 32 km

Notes:

*The range may be considerably above or below that stated. It is dependent on the environment, antenna technology, transmission power, and the product used.

The latest country registrations for the relevant product can be found on the Internet at phoenixcontact.com.

Wireless path	
Direction	
Frequency range	
Data rate (adjustable)	
Number of channels	
Security	
Connection method	
Serial port	
Connection method	
Serial transmission speed	
Termination resistor (switchable via DIP switches)	
Analog output	
Signal range	
Digital output	
Contact type	
Switching voltage	
Switching current	
General data	
Supply voltage	
Current consumption	
Degree of protection	
Ambient temperature range	
Permissible humidity (operation)	
Dimensions	W / H / D
Screw connection solid/stranded/AWG	
EMC note	
Conformance/Approvals	
ATEX	
IECEx	
UL, USA/Canada	

Description
Wireless module - can be extended with I/O extension modules - With Japan approval (no ATEX, IECEx or UL approval)

CONFSTICK, configuration memory for the safe parallel operation of several wireless paths or networks	
	RF band 1
	RF band 3
	RF band 5
	RF band 7
Memory stick, for saving custom configuration data	
USB cable, for diagnostics and extended configuration	

2.4 GHz wireless transceiver, for worldwide use

Ex:
Housing width 17.5 mm

Technical data

Bi-directional	
2.4002 GHz ... 2.4785 GHz	
16 kbps / 125 kbps / 250 kbps	
8 x 55	
128-bit data encryption	
RSMA (female)	
RS-232	RS-485
COMBICON connector screw terminal block	COMBICON connector screw terminal block
0.3 ... 115.2 kbps	0,3 ... 187,5 kbps
-	390 Ω / 150 Ω / 390 Ω
RSSI voltage output	
0 V ... 3 V	
RF link relay output	
PDT	
30 V AC/DC / 60 V DC	
500 mA (30 V AC/DC)	
19.2 V DC ... 30.5 V DC	
≤ 65 mA (at 24 V DC, at 25 °C, stand-alone)	
IP20	
-40 °C ... 70 °C	
20 % ... 85 %	
17.5 / 99 / 114.5 mm	
0.2 ... 2.5 mm² / 0.2 ... 2.5 mm² / 24 - 14	
Class A product, see page 525	
II 3 G Ex nA nC IIC T4 Gc	
Ex nA nC IIC T4 Gc	
UL 508 Listed	
Class I, Div. 2, Groups A, B, C, D T4A	
Class I, Zone 2, IIC T4	

Ordering data

Type	Order No.	Pcs./Pkt.
RAD-2400-IFS	2901541	1
RAD-2400-IFS-JP	2702863	1

Accessories

RAD-CONF-RF3	2902814	1
RAD-CONF-RF5	2902815	1
RAD-CONF-RF7	2902816	1
RAD-MEMORY	2902828	1
RAD-CABLE-USB	2903447	1

868 MHz wireless transceiver, for license-free use in Europe

Ex:
Housing width 17.5 mm

Technical data

Bi-directional	
869.4 MHz ... 869.65 MHz	
1.2 kbps / 9.6 kbps / 19.2 kbps / 60 kbps / 120 kbps	
14	
128-bit data encryption	
RSMA (female)	
RS-232	RS-485
COMBICON connector screw terminal block	COMBICON connector screw terminal block
0.3 ... 115.2 kbps	0.3 ... 115.2 kbps
-	390 Ω / 150 Ω / 390 Ω
RSSI voltage output	
0 V ... 3 V	
RF link relay output	
PDT	
30 V AC / 60 V DC	
500 mA	
19.2 V DC ... 30.5 V DC	
≤ 65 mA (at 24 V DC, at 25 °C, stand-alone)	
IP20	
-40 °C ... 70 °C	
20 % ... 85 %	
17.5 / 99 / 114.5 mm	
0.2 ... 2.5 mm² / 0.2 ... 2.5 mm² / 24 - 14	
Class A product, see page 525	
II 3 G Ex nA nC IIC T4 Gc	
Ex nA nC IIC T4 Gc	
-	

Ordering data

Type	Order No.	Pcs./Pkt.
RAD-868-IFS	2904909	1

Accessories

RAD-868-CONF-RF1	2702197	1
RAD-MEMORY	2902828	1
RAD-CABLE-USB	2903447	1

900 MHz wireless transceiver, for license-free use in America

Ex:
Housing width 35 mm

Technical data

Bi-directional	
902 MHz ... 928 MHz	
16 kbps / 125 kbps / 250 kbps / 500 kbps	
-	
128-bit data encryption	
RSMA (female)	
RS-232	RS-485
COMBICON connector screw terminal block	COMBICON connector screw terminal block
0.3 ... 115.2 kbps	0.3 ... 115.2 kbps
-	390 Ω / 150 Ω / 390 Ω
RSSI voltage output	
0 V ... 3 V	
RF link relay output	
PDT	
30 V AC/DC	
500 mA	
10.8 V DC ... 30.5 V DC	
328 mA (@24 V DC)	
IP20	
-40 °C ... 70 °C	
20 % ... 85 %	
35 / 99 / 114.5 mm	
0.2 ... 2.5 mm² / 0.2 ... 2.5 mm² / 24 - 14	
-	
-	
Class I, Div. 2, Groups A, B, C, D	

Ordering data

Type	Order No.	Pcs./Pkt.
RAD-900-IFS	2901540	1

Accessories

RAD-900-CONF-RF1	2702122	1
RAD-MEMORY	2902828	1
RAD-CABLE-USB	2903447	1

Radioline – I/O mapping now in wired format as well

The popular, straightforward method of distributing I/O information using white thumbwheels on the front of the equipment is now also available for RS-485 networks.

Addressing the RS-485 front module is quick and easy too – all it takes is a turn of the yellow thumbwheel. This enhances the Radioline system's flexibility, allowing it to be used for solutions in even more applications.

The device supports three functions:

Supplementing a wireless system

A Radioline wireless system on an existing master can be expanded to include new RS-485 stations. RS-485 and wireless modules form a combined system.

Operation in a purely RS-485 network

In an RS-485 network with up to 99 Radioline stations, you can now distribute I/O signals between the stations. This is done without the need for software configuration by simply turning the thumbwheel.

Stand-alone operation as a Modbus slave

The new Radioline RS-485 stations can also be operated on any Modbus/RTU master.

Alternative transmission media

To increase the range, it is of course possible to replace the RS-485 line with alternative transmission media.

Phoenix Contact offers a range of converters for fiber-optic cables, SHDSL, wireless or Ethernet technology.

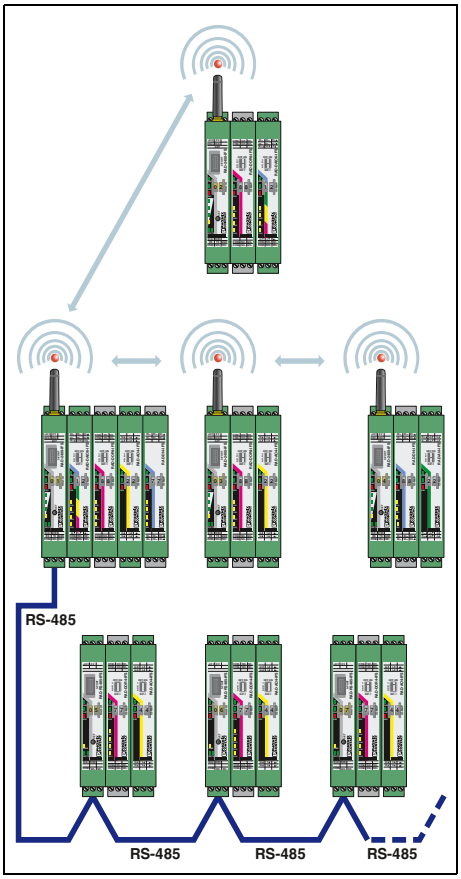

I/O to I/O in a combined system

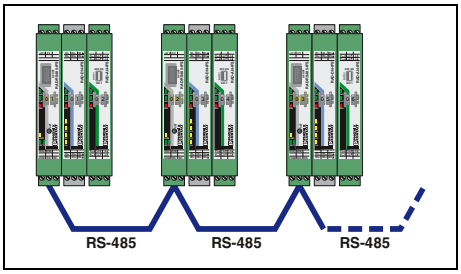

I/O to I/O via RS-485

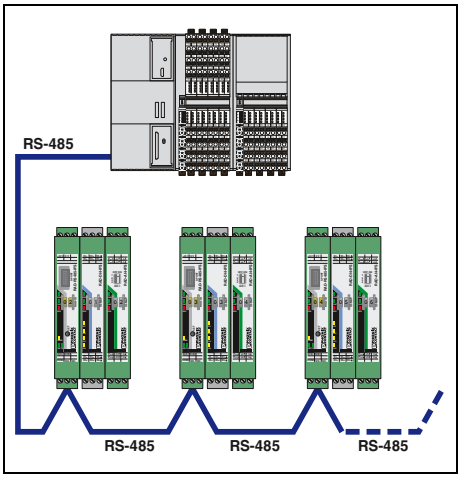

I/O to serial (Modbus/RTU slave)

Multipoint multiplexer

Your advantages
- Up to 99 bus stations in the network
- Modular extension with up to 32 I/O extension modules supported
- Quick and easy startup without programming
- Can be combined with Radioline wireless modules

RS-485 serial interface

Ex:
Housing width 17.5 mm

Technical data

Serial port		RS-485
Connection method		COMBICON connector screw terminal block
Serial transmission speed		0.3 ... 115.2 kbps (Default setting: 19.2/8/E/1)
Termination resistor (switchable via DIP switches)		390 Ω / 150 Ω / 390 Ω
Digital output		Link relay output
Contact type		PDT
Switching voltage		30 V AC/DC / 60 V DC
Switching current		500 mA (30 V AC/DC)
General data		
Supply voltage		19.2 V DC ... 30.5 V DC
Current consumption		≤ 65 mA (at 24 V DC, at 25 °C, stand-alone)
Degree of protection		IP20
Ambient temperature range		-40 °C ... 70 °C
Permissible humidity (operation)		20 % ... 85 %
Dimensions	W / H / D	17.5 / 99 / 114.5 mm
Screw connection solid/stranded/AWG		0.2 ... 2.5 mm² / 0.2 ... 2.5 mm² / 24 - 14
EMC note		Class A product, see page 525
Conformance/Approvals		
ATEX		II 3 G Ex nA nC IIC T4 Gc
IECEx		Ex nA nC IIC T4 Gc
UL, USA/Canada		UL 508 Listed Class I, Div. 2, Groups A, B, C, D T4A Class I, Zone 2, IIC T4

Ordering data

Description	Type	Order No.	Pcs./Pkt.
Multipoint multiplexer			
	RAD-RS485-IFS	**2702184**	1

Accessories

Shield connection terminal block, with snap-on foot, mounting on DIN rail NS 35..., for shield support on busbars Ø 3-8 mm	**SKS 8-SNS35**	**3062786**	10
Plug-in terminal, for connecting the incoming and outgoing bus line	**TVFKC 1,5/ 3-ST**	**1713842**	50
USB cable, for diagnostics and extended configuration	**RAD-CABLE-USB**	**2903447**	1

I/O extension modules

- Easy I/O mapping via thumb wheel
- Digital wide-range inputs (0 ... 250 V AC/DC)
- 0 ... 100 Hz digital pulse inputs
- Relay or transistor outputs
- Easy module replacement even during operation (hot swap)
- Extended temperature range (-40 °C ... +70 °C)

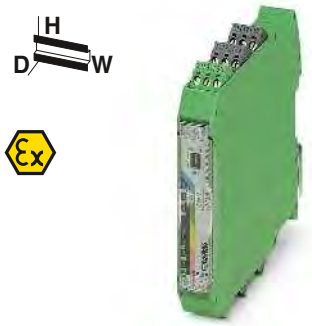

2 digital inputs/outputs and 1 analog input/output

4 digital inputs

		Ex: Housing width 17.5 mm	Ex: Housing width 17.5 mm
		Technical data	**Technical data**
Analog input			
Number of inputs		1	-
Resolution		16 bit	-
Signal range (configurable using the DIP switch)		0 mA ... 20 mA / 4 mA ... 20 mA	-
Accuracy		≤ 0.02 % (at 25 °C)	-
Supply voltage		≥ 12 V DC (For passive sensors (via terminal PWR1, +I1))	-
Digital input			
Number of inputs		2	4
Switching level	1 signal ("H")	10 V AC/DC ... 50 V AC/DC (Low-voltage input) 50 V AC/DC ... 250 V AC/DC (High-voltage input)	10 V AC/DC ... 50 V AC/DC (Low-voltage input) 50 V AC/DC ... 250 V AC/DC (High-voltage input)
Switching level	0 signal ("L")	0 V AC/DC ... 4 V AC/DC (Low-voltage input) 0 V AC/DC ... 20 V AC/DC (High-voltage input)	0 V AC/DC ... 4 V AC/DC (Low-voltage input) 0 V AC/DC ... 20 V AC/DC (High-voltage input)
Input frequency		≤ 2 Hz	≤ 2 Hz
Pulse input			
Number of inputs		-	-
Signal range		-	-
Input frequency		-	-
Pulse length		-	-
Analog output			
Number of outputs		1	-
Signal range		0 mA ... 20 mA 4 mA ... 20 mA 0 V ... 10 V	-
Accuracy		≤ 0.02 % (at 25 °C) typ. 0.5 %	-
Load R_B		≤ 500 Ω ≥ 10 kΩ	-
Digital output			
Contact type		2 x Relay output	-
Switching voltage		250 V AC 24 V DC	-
Switching current	min./max.	≥ 10 mA / 2 A	-
Switching frequency		2 Hz	-
General data			
Supply voltage		19.2 V DC ... 30.5 V DC (DIN rail connector)	19.2 V DC ... 30.5 V DC (DIN rail connector)
Current consumption		≤ 95 mA (At 24 V DC, at 25°C)	≤ 11 mA (At 24 V DC, at 25°C)
Degree of protection		IP20	IP20
Ambient temperature range		-40 °C ... 70 °C	-40 °C ... 70 °C
Dimensions	W / H / D	17.5 / 99 / 114.5 mm	17.5 / 99 / 114.5 mm
EMC note		Class A product, see page 525	Class A product, see page 525
Conformance/Approvals			
ATEX		II 3 G Ex nA nC IIC T4 Gc	II 3 G Ex nA IIC T4 Gc
IECEx		Ex nA nC IIC T4 Gc	Ex nA IIC T4 Gc
UL, USA/Canada		UL 508 Listed Class I, Div. 2, Groups A, B, C, D T4A Class I, Zone 2, IIC T4	UL 508 Listed Class I, Div. 2, Groups A, B, C, D T4A Class I, Zone 2, IIC T4

	Ordering data			**Ordering data**		
Description	**Type**	**Order No.**	Pcs./Pkt.	**Type**	**Order No.**	Pcs./Pkt.
Analog/digital I/O module	**RAD-DAIO6-IFS**	2901533	1			
Digital input module				**RAD-DI4-IFS**	2901535	1
Digital relay output module						
Digital/pulse input module						
Digital transistor output module						
	Accessories			**Accessories**		
Analog/digital I/O module	**RAD-DAIO6-IFS**	2901533	1			
Digital relay output module				**RAD-DOR4-IFS**	2901536	1
Digital input module						
Digital transistor output module						
Digital/pulse input module						

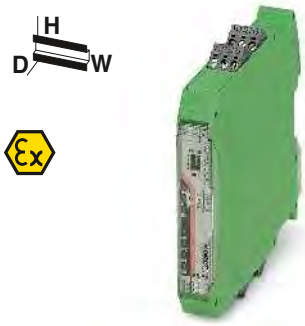

4 digital relay outputs

Ex:
Housing width 17.5 mm

Technical data
-
-
-
-
-
-
-
-
-
-
-
-
-
-
-
-
-
4 x Relay output
250 V AC
24 V DC
≥ 10 mA / 5 A (per channel)
2 Hz
19.2 V DC ... 30.5 V DC (DIN rail connector)
≤ 55 mA (At 24 V DC, at 25°C)
IP20
-40 °C ... 70 °C
17.5 / 99 / 114.5 mm
Class A product, see page 525
II 3 G Ex nA nC IIC T4 Gc
Ex nA nC IIC T4 Gc
UL 508 Listed
Class I, Div. 2, Groups A, B, C, D T4A
Class I, Zone 2, IIC T4

Ordering data

Type	Order No.	Pcs./Pkt.
RAD-DOR4-IFS	2901536	1

Accessories

RAD-DI4-IFS	2901535	1

8 digital inputs and 2 pulse inputs

Ex:
Housing width 17.5 mm

Technical data
-
-
-
-
-
8
10 V DC ... 30.5 V DC
0 V DC ... 4 V DC
≤ 10 Hz (Static mode)
2
0 V DC ... 30.5 V DC
< 100 Hz (Pulse counter mode)
≥ 5 ms (Pulse/pause ratio 1:1)
-
-
-
-
-
-
19.2 V DC ... 30.5 V DC (DIN rail connector)
≤ 18 mA (At 24 V DC, at 25°C)
IP20
-40 °C ... 70 °C
17.5 / 99 / 114.5 mm
Class A product, see page 525
II 3 G Ex nA IIC T4 Gc
Ex nA IIC T4 Gc
UL 508 Listed
Class I, Div. 2, Groups A, B, C, D T4A
Class I, Zone 2, IIC T4

Ordering data

Type	Order No.	Pcs./Pkt.
RAD-DI8-IFS	2901539	1

Accessories

RAD-DO8-IFS	2902811	1

8 digital transistor outputs

Ex:
Housing width 17.5 mm

Technical data
-
-
-
-
-
-
-
-
-
-
-
-
-
-
-
-
-
8 x Transistor output, active
30.5 V DC
- / 200 mA (per channel)
10 Hz
19.2 V DC ... 30.5 V DC (DIN rail connector)
≤ 22 mA (At 24 V DC, at 25°C)
IP20
-40 °C ... 70 °C
17.5 / 99 / 114.5 mm
Class A product, see page 525
II 3 G Ex nA IIC T4 Gc
Ex nA IIC T4 Gc
UL 508 Listed
Class I, Div. 2, Groups A, B, C, D T4A
Class I, Zone 2, IIC T4

Ordering data

Type	Order No.	Pcs./Pkt.
RAD-DO8-IFS	2902811	1

Accessories

RAD-DI8-IFS	2901539	1

I/O extension modules

- Easy I/O mapping via thumb wheel
- Analog inputs (0/4 ... 20 mA)
- Temperature inputs for Pt 100 sensors
- Analog outputs (0/4 ... 20 mA or 0 ... 10 V)
- Easy module replacement even during operation (hot swap)
- Extended temperature range (-40 °C ... +70 °C)

4 analog current inputs

Ex:
Housing width 17.5 mm

Technical data

Analog input		
Number of inputs		4
Resolution		16 bit
Signal range (configurable using the DIP switch)		0 mA ... 20 mA / 4 mA ... 20 mA
Accuracy		≤ 0.02 % (at 25 °C)
Supply voltage		≥ 12 V DC (For passive sensors (via terminal PWR1, +I1))
Analog input		
Description of the input		-
Number of inputs		-
Temperature measuring range		-
Analog output		
Number of outputs		-
Signal range		-
Accuracy		-
Load R_B		-
General data		
Supply voltage		19.2 V DC ... 30.5 V DC (DIN rail connector)
Current consumption		≤ 120 mA (At 24 V DC, at 25°C)
Degree of protection		IP20
Ambient temperature range		-40 °C ... 70 °C
Dimensions	W / H / D	17.5 / 99 / 114.5 mm
EMC note		Class A product, see page 525
Conformance/Approvals		
ATEX		II 3 G Ex nA IIC T4 Gc
IECEx		Ex nA IIC T4 Gc
UL, USA/Canada		UL 508 Listed Class I, Div. 2, Groups A, B, C, D T4A Class I, Zone 2, IIC T4

Ordering data

Description	Type	Order No.	Pcs./Pkt.
Analog input module Temperature input module Analog output module	**RAD-AI4-IFS**	2901537	1

Accessories

Analog output module Analog input module Temperature input module	**RAD-AO4-IFS**	2901538	1

4 temperature inputs

Ex:
Housing width 17.5 mm

Technical data

-	
-	
-	
-	
-	
Pt 100 input	
4	
-50 °C ... 250 °C	
-	
-	
-	
-	
19.2 V DC ... 30.5 V DC (DIN rail connector)	
≤ 38 mA (At 24 V DC, at 25°C)	
IP20	
-40 °C ... 70 °C	
17.5 / 99 / 114.5 mm	
Class A product, see page 525	
II 3 G Ex nA IIC T4 Gc	
Ex nA IIC T4 Gc	
UL 508 Listed	
Class I, Div. 2, Groups A, B, C, D T4A	
Class I, Zone 2, IIC T4	

Ordering data

Type	Order No.	Pcs./Pkt.
RAD-PT100-4-IFS	2904035	1

Accessories

RAD-AO4-IFS	2901538	1

4 analog current/voltage outputs

Ex:
Housing width 17.5 mm

Technical data

-	
-	
-	
-	
-	
-	
-	
-	
4	
0 mA ... 20 mA	0 V ... 10 V
4 mA ... 20 mA	
≤ 0.02 % (at 25 °C)	typ. 0.5 %
≤ 500 Ω	≥ 10 kΩ
19.2 V DC ... 30.5 V DC (DIN rail connector)	
≤ 115 mA (At 24 V DC, at 25°C)	
IP20	
-40 °C ... 70 °C	
17.5 / 99 / 114.5 mm	
Class A product, see page 525	
II 3 G Ex nA IIC T4 Gc	
Ex nA IIC T4 Gc	
UL 508 Listed	
Class I, Div. 2, Groups A, B, C, D T4A	
Class I, Zone 2, IIC T4	

Ordering data

Type	Order No.	Pcs./Pkt.
RAD-AO4-IFS	2901538	1

Accessories

RAD-AI4-IFS	2901537	1
RAD-PT100-4-IFS	2904035	1

2.4 GHz/5 GHz accessories

Omnidirectional antennas

Omnidirectional antennas to increase gain.

– Standard omnidirectional antennas

Gain 2 dBi (2.4 GHz)

Gain 2.5 dBi (2.4 GHz)/5 dBi (5 GHz)

	Technical data	Technical data
General data		
Ambient temperature (operation)	-20 °C ... 65 °C	-40 °C ... 70 °C
Degree of protection	IP65	IP68
Gain	2 dBi -	2.5 dBi (2.4 GHz) 5 dBi (5 GHz)
Impedance	50 Ω	50 Ω
Horizontal / vertical apex angle	360 ° / 75 °	360 ° / 30 ° (At 2.4 GHz) 360 ° / 16 ° (At 5 GHz)
Dimensions W / H	7.8 mm / 82.5 mm	23 mm / 180 mm
Frequency range	2.4 GHz	2.4 GHz ... 2.5 GHz / 5.15 GHz ... 5.83 GHz
Scope of delivery	Incl. mounting material	-

	Ordering data			Ordering data		
Description	Type	Order No.	Pcs./Pkt.	Type	Order No.	Pcs./Pkt.
Omnidirectional antenna						
With connection RSMA (male)	RAD-ISM-2400-ANT-OMNI-2-1-RSMA	2701362	1			
With N connection (male)				ANT-OMNI-2459-02	2701408	1

2.4 GHz/5 GHz accessories

Omnidirectional antennas

Omnidirectional antennas to increase gain.

– With vandalism protection thanks to increased impact strength

Gain 3 dBi (2.4 GHz)

Dual band,
gain up to 6 dBi (2.4 GHz)/up to 8 dBi (5 GHz)

	Technical data	Technical data
General data		
Ambient temperature (operation)	-40 °C ... 80 °C	-40 °C ... 80 °C
Degree of protection	IP55	IP68
Gain	3 dBi -	6 dBi (2.4 GHz, when mounted on metal surface) 8 dBi (5.6 GHz, when mounted on metal surface)
Impedance	50 Ω	50 Ω
Horizontal / vertical apex angle	360 ° / 85 °	360 ° / -
Dimensions W / H	86 mm / 43 mm	92 mm / 51 mm
Frequency range	2.4 GHz	2.4 GHz / 5.15 GHz ... 5.83 GHz

	Ordering data			Ordering data		
Description	Type	Order No.	Pcs./Pkt.	Type	Order No.	Pcs./Pkt.
OMNI omnidirectional antenna with protection against vandals						
With connection RSMA (male)	RAD-ISM-2400-ANT-VAN-3-0-RSMA	2701358	1			
With connection N (female)				RAD-ISM-2459-ANT-FOOD-6-0-N	2702898	1
Mounting material for wall mounting	RAD-ANT-VAN-MKT	2885870	1			

2.4 GHz/5 GHz accessories

Omnidirectional antennas

Omnidirectional antennas to increase gain.

– High-quality omnidirectional antennas for wall and mast mounting

Gain 6 dBi (2.4 GHz)

Gain 5 dBi (5 GHz)

	Technical data	Technical data
General data		
Ambient temperature (operation)	-40 °C ... 75 °C	-45 °C ... 70 °C
Degree of protection	IP67	IP64
Gain	6 dBi	5 dBi
Impedance	50 Ω	50 Ω
Horizontal / vertical apex angle	360 ° / 30 °	360 ° / 25 °
Dimensions W / H	22 mm / 250 mm	16 mm / 130 mm
Frequency range	2.4 GHz ... 2.5 GHz	5.15 GHz ... 5.875 GHz
Scope of delivery	Incl. mounting material	Incl. mounting material

	Ordering data			Ordering data		
Description	Type	Order No.	Pcs./Pkt.	Type	Order No.	Pcs./Pkt.
Omnidirectional antenna						
With connection N (female)	**RAD-ISM-2400-ANT-OMNI-6-0**	2885919	1	**ANT-OMNI-5900-01**	2701347	1

2.4 GHz/5 GHz accessories

Directional wireless antennas

Directional wireless antennas with high gain for transmission over longer distances.

– For wall or mast mounting

Gain: 9 dBi (2.4 GHz / 5 GHz)

Gain: 19 dBi (2.4 GHz)

	Technical data		Technical data
General data	ANT-DIR-2459-01	ANT-DIR-5900-01	
Ambient temperature (operation)	-40 °C ... 75 °C	-40 °C ... 80 °C	-40 °C ... 70 °C
Degree of protection	IP67	IP67	IP65
Gain	9 dBi	9 dBi	19 dBi
Impedance	50 Ω	50 Ω	50 Ω
Horizontal / vertical apex angle	75 ° / 55 ° (At 2.4 GHz) 55 ° / 55 ° (At 5 GHz)	70 ° / 60 ° (At 5 GHz) -	17 ° / 11 °
Dimensions W / H	80 mm / 101 mm	80 mm / 101 mm	610 mm / 419 mm
Frequency range	2.4 GHz ... 2.5 GHz / 5.15 GHz ... 5.875 GHz	5.15 GHz ... 5.875 GHz	2.4 GHz
Scope of delivery	Incl. mounting material	Incl. mounting material	Incl. mounting material

	Ordering data			Ordering data		
Description	Type	Order No.	Pcs./Pkt.	Type	Order No.	Pcs./Pkt.
Panel directional wireless antenna (without cable)						
With connection N (female), dual band	**ANT-DIR-2459-01**	2701186	1			
With connection N (female), 2 emitters	**ANT-DIR-5900-01**	2701348	1			
Parabolic antenna						
With connection N (female)				**RAD-ISM-2400-ANT-PAR-19-0**	2867885	1

868 MHz/900 MHz accessories

Omnidirectional antennas
– For wall or mast mounting

Gain: 4 dBi (868 MHz)

Gain: 2 dBi (868/900 MHz)

	Technical data	Technical data
General data		
Ambient temperature (operation)	-40 °C ... 75 °C	-40 °C ... 70 °C
Degree of protection	IP67	IP66
Gain	4 dBi	2.15 dBi
Impedance	50 Ω	50 Ω
Connection method	N (female)	Type N (female)
Horizontal / vertical apex angle	360 ° / 30 °	360 ° / 50 °
Dimensions W / H	20 mm / 620 mm	36 mm / 84 mm
Frequency range	868 MHz ... 870 MHz	868 MHz ... 960 MHz
Scope of delivery	Incl. mounting material	-

	Ordering data			Ordering data		
Description	Type	Order No.	Pcs./Pkt.	Type	Order No.	Pcs./Pkt.
Omnidirectional antenna						
	ANT-OMNI-868-01	2702136	1	RAD-900-ANT-OMNI-2-N	2904802	1

868 MHz/900 MHz accessories

Directional wireless antennas
– For wall or mast mounting

Gain: 3.5 dBi (868 MHz)
Circular polarized

Yagi directional antenna,
up to 12 dBi gain (868/900 MHz)

	Technical data	Technical data	
General data		...-YAGI-6.5-N	...-YAGI-10-N
Ambient temperature (operation)	-40 °C ... 75 °C	-40 °C ... 80 °C	-40 °C ... 80 °C
Degree of protection	IP67	IP65	IP65
Gain	3.5 dBi	8.5 dBi	12.15 dBi
Impedance	50 Ω	50 Ω	50 Ω
Connection method	N (female)	N (female) with cable (0.6 m)	N (female) with cable (0.6 m)
Horizontal / vertical apex angle	135 ° / 90 °	100 ° / 62 °	56 ° / 46 °
Dimensions W / H	80 mm / 101 mm	60.5 mm / 172 mm	60.5 mm / 172 mm
Frequency range	865 MHz ... 870 MHz	868 MHz ... 960 MHz	868 MHz ... 960 MHz
Scope of delivery	Incl. mounting material	Incl. mounting material	Incl. mounting material

	Ordering data			Ordering data		
Description	Type	Order No.	Pcs./Pkt.	Type	Order No.	Pcs./Pkt.
Panel directional wireless antenna (without cable)						
	ANT-DIR-868-01	2702137	1			
Directional wireless antenna						
				RAD-ISM-900-ANT-YAGI-6.5-N	2867814	1
				RAD-ISM-900-ANT-YAGI-10-N	5606614	1

Antenna cable

– Various cables for connection of different antennas
– Frequency range: 900 MHz ... 5 GHz

Antenna adapter cable, N (male) -> RSMA (male)

Antenna extension cable

	Technical data	Technical data
General data		
Ambient temperature range	-40 °C ... 85 °C	-40 °C ... 105 °C
Impedance	50 Ω	50 Ω

	Ordering data			Ordering data		
Description	Type	Order No.	Pcs./Pkt.	Type	Order No.	Pcs./Pkt.
Antenna adapter cable						
0.5 m long	RAD-PIG-RSMA/N-0.5	2903263	1			
1 m long	RAD-PIG-RSMA/N-1	2903264	1			
2 m long	RAD-PIG-RSMA/N-2	2903265	1			
3 m long	RAD-PIG-RSMA/N-3	2903266	1			
5 m long	RAD-PIG-RSMA/N-5	2702140	1			
Antenna extension cable						
3 m long, N connection at both ends (male)				RAD-CAB-EF393- 3M	2867649	1
5 m long, N connection at both ends (male)				RAD-CAB-EF393- 5M	2867652	1
10 m long, N connection at both ends (male)				RAD-CAB-EF393-10M	2867665	1
15 m long, N connection at both ends (male)				RAD-CAB-EF393-15M	2885634	1

Accessories
Adapter/extension cables

– Extension or adaptation of wireless module for antenna
– Frequency range: 900 MHz ... 5 GHz

Panel feed-through

	Technical data	Technical data
General data		
Ambient temperature range	-40 °C ... 105 °C	-40 °C ... 70 °C
Impedance	50 Ω	50 Ω

	Ordering data			Ordering data		
Description	Type	Order No.	Pcs./Pkt.	Type	Order No.	Pcs./Pkt.
Antenna cable						
50 cm long, N (male) -> N (male)	FL LCX PIG-EF142-N-N	2700677	1			
Antenna adapter cable						
50 cm long, N (female) -> RSMA (male)				RAD-PIG-EF316-N-RSMA	2701402	1

Accessories

Surge protection

– For installing the antenna outside buildings from a cable length of 3 m

Antenna surge protection

Surge protective device for coaxial lines

	Technical data	Technical data
General data		
Ambient temperature range	-40 °C ... 90 °C	-40 °C ... 90 °C
Degree of protection	-	IP68
Attenuation	typ. 0.05 dB (≤ 0.15 dB)	0.1 dB (≤ 6 GHz)
Frequency range	2.4 GHz ... 5.9 GHz	0 Hz ... 6 GHz

	Ordering data			Ordering data		
Description	Type	Order No.	Pcs./Pkt.	Type	Order No.	Pcs./Pkt.
COAXTRAB, protective adapter for antenna connections with Lambda/4 technology, 2.4 to 5.9 GHz						
Socket-socket	**CN-LAMBDA/4-5.9-BB**	2838490	1			
Male/female	**CN-LAMBDA/4-5.9-SB**	2800023	1			
COAXTRAB, protective adapter for coaxial cable systems, DC to 6 GHz						
Socket-socket				**CN-UB-70DC-6-BB**	2803166	1
Plug/socket				**CN-UB-70DC-6-SB**	2803153	1

Adapter

– For installing the antenna inside buildings

Sealing tape

– Provides additional weather protection for adapters, splitters, cable connections, etc.
– Self-vulcanizing

Adapter

Sealing tape

	Technical data	Technical data
General data		
Ambient temperature range	-65 °C ... 165 °C	-40 °C ... 90 °C
Degree of protection	IP20	-
Impedance	50 Ω	-
Features	-	Self-vulcanizing
Width	-	19 mm
Length	-	3 m
Thickness	-	0.75 mm

	Ordering data			Ordering data		
Description	Type	Order No.	Pcs./Pkt.	Type	Order No.	Pcs./Pkt.
Adapter						
N (female) -> N (female)	**RAD-ADP-N/F-N/F**	2867843	1			
Weather protection tape						
				RAD-TAPE-SV-19-3	2903182	1

Accessories

Antenna barrier

– For the safe use of standard antennas in the ex area

The antenna barrier limits the ignition energy at the antenna connection in an intrinsically safe way according to protection type Ex i. Standard antennas can therefore be used up to Ex zone 0.

for installation in Ex Zone 1

for installation in Ex Zone 2

	Technical data	Technical data
General data		
Ambient temperature range	-40 °C ... 75 °C	-40 °C ... 75 °C
Degree of protection	IP66	IP65
Frequency range	25 MHz ... 6000 MHz	700 MHz ... 6000 MHz
Conformance/Approvals		
ATEX	Ex II 2(1)G, Ex d mb [ia] IIC	Ex I (M1) [Ex ia Ma] I Ex II (1) G [Ex ia Ga] IIC Ex II (1) D [Ex ia Da] IIIC Ex II 3 (1) G Ex nA [ia Ga] IIC T6 Gc X Please follow the special installation instructions in the documentation!
IECEx	-	[Ex ia Ma] I [Ex ia Ga] IIC [Ex ia Da] IIIC Ex nA [ia Ga] IIC T6 Gc X

	Ordering data			Ordering data		
Description	Type	Order No.	Pcs./Pkt.	Type	Order No.	Pcs./Pkt.
Antenna barrier 76 cm long, N (female) -> RSMA (male) N (female) -> N (female)	**RAD-PIG-RSMA-N-EX/ATEX**	2904788	1	**BAR-ANT-N-N-EX**	2702198	1

Accessories

Antenna splitter

– For splitting HF signals between two antennas
– For connecting two directional antennas for repeater applications
– Use the FL LCX PIG-EF142-N-N antenna cable to connect two directional antennas

Antenna splitter

	Technical data
General data	
Ambient temperature range	-40 °C ... 100 °C
Degree of protection	IP65, when installed
Frequency range	0 Hz ... 11 GHz

	Ordering data		
Description	Type	Order No.	Pcs./Pkt.
Antenna splitter	**RAD-SPL-2-N/N**	2702293	1
Antenna cable 50 cm long, N (male) -> N (male)	**FL LCX PIG-EF142-N-N**	2700677	1

Leaky wave cable and accessories

The leaky wave cable is a cable that acts as an antenna, which emits continuously along its length. It ensures a continuous wireless connection when using track-guided systems, even in angled or difficult to reach spaces.

new

Leaky wave cable

new

Planing tool and cable tie

	Technical data	Technical data
General data		
Ambient temperature (operation)	-40 °C ... 85 °C	-
Cable, attenuation	14.7 dB/100 m, longitudinal attenuation (2.4 GHz)	-
Connection method	open end	-

Description	Ordering data: Type	Order No.	Pcs./Pkt.	Ordering data: Type	Order No.	Pcs./Pkt.
Leaky wave cables						
- 2.4 GHz frequency band	**FL LCX CABLE 24 E**	2702553	1			
- 5 GHz frequency band	**FL LCX CABLE 5 E**	2702860	1			
Connectors for leaky wave cable	**FL LCX CON-N-F E**	2702518	1			
Termination resistor						
- for leaky wave cable, N (male)	**FL LCX 50-OHM**	2884978	1			
- For device, RSMA (male)	**FL LCX 50-OHM-RSMA**	2702702	1			
Alignment tool for leaky wave cable				**FL LCX TOOL E**	2702519	1
Cable tie for leaky wave cable				**FL LCX CLAMP E**	2702520	100

Control box sets

Control box set for the FL WLAN 5100 access point for use directly in industrial environments or in protected outdoor areas.

Features:

- IP66 control box
- Mounting suitable for industrial use
- Bore holes, screw connections already included
- Various sets, suitable for the most common applications

		Technical data
General data		
Dimensions	W / H / D	174 mm / 254 mm / 137 mm

Description	Ordering data: Type	Order No.	Pcs./Pkt.
Control cabinet set, IP66, including DIN rail, plugs, and screw connections			
	FL RUGGED BOX	2701204	1
- With 3 omnidirectional antennas and antenna cables	**FL RUGGED BOX OMNI-1**	2701430	1
- With 3 omnidirectional antennas, antenna cables, and 100 ... 240 V AC power supply	**FL RUGGED BOX OMNI-2**	2701439	1
- With one directional antenna, antenna cables, and 100 ... 240 V AC power supply	**FL RUGGED BOX DIR-1**	2701440	1
	Accessories		
Set for mast mounting of the FL RUGGED BOX housing, including screw clamps for masts up to 89 mm in diameter	**FL RUGGED BOX POLE SET**	2701205	1

900 MHz accessories

Omnidirectional antennas

- Mobile or stationary applications
- Point-to-multipoint configurations
- Small antennas are suitable for applications with a shorter range
- Large antennas are suitable for applications requiring longer range

2.15 dBi/7 dBi gain

5 dBi/8 dBi gain

	Technical data		Technical data	
General data	...-OMNI-0-6 / ...-OMNI-2-2-...	...-OMNI-5	...-OMNI-FG-3-N	...-OMNI-FG-6-N
Ambient temperature (operation)	-40 °C ... 75 °C	-40 °C ... 80 °C	-40 °C ... 80 °C	-40 °C ... 80 °C
Degree of protection	IP65	IP65	IP65	IP65
Gain	2.15 dBi	7 dBi	5.15 dBi	8 dBi
Impedance	50 Ω	50 Ω	50 Ω	50 Ω
Horizontal / vertical apex angle	360 ° / N/A	360 ° / 30 °	360 ° / 28 °	360 ° / 15 °
Dimensions W / H	0.3 cm / 8.9 cm	0.3 cm / 60.9 cm	2.38 in. / 44.25 in.	6.05 cm / 180.34 cm
Frequency range	900 MHz	900 MHz	902 MHz ... 928 MHz	900 MHz
Scope of delivery	Incl. mounting material	Incl. mounting material	Incl. mounting material	Incl. mounting material

	Ordering data			Ordering data		
Description	Type	Order No.	Pcs./Pkt.	Type	Order No.	Pcs./Pkt.
Omnidirectional antenna						
With connection MCX (male)	RAD-ISM-900-ANT-OMNI-0-6	2867160	1			
With connection RSMA (male)	RAD-900-ANT-OMNI-2-2-RSMA	2904801	1			
With connection N (female)	RAD-ISM-900-ANT-OMNI-5	2867199	1	RAD-ISM-900-ANT-OMNI-FG-3-N	2867791	1
With connection N (female)				RAD-ISM-900-ANT-OMNI-FG-6-N	2885579	1

900 MHz accessories

Directional wireless antennas (YAGI)

- Stationary applications
- Point-to-point configurations for line of sight

5 dBi gain,
with 0.6 m connecting cable

8.5 dBi/12 dBi gain,
with 0.6 m connecting cable

	Technical data	Technical data	
General data		...-YAGI-6.5-N	...-YAGI-10-N
Ambient temperature (operation)	-40 °C ... 80 °C	-40 °C ... 80 °C	-40 °C ... 80 °C
Degree of protection	IP65	IP65	IP65
Gain	5 dBi	8.5 dBi	12.15 dBi
Impedance	50 Ω	50 Ω	50 Ω
Connection method	N (female) with cable (0.6 m)	N (female) with cable (0.6 m)	N (female) with cable (0.6 m)
Horizontal / vertical apex angle	168 ° / 78 °	100 ° / 62 °	56 ° / 46 °
Dimensions W / H	6 cm / 17 cm	60.5 mm / 172 mm	60.5 mm / 172 mm
Frequency range	900 MHz	868 MHz ... 960 MHz	868 MHz ... 960 MHz
Scope of delivery	Incl. mounting material	Incl. mounting material	Incl. mounting material

	Ordering data			Ordering data		
Description	Type	Order No.	Pcs./Pkt.	Type	Order No.	Pcs./Pkt.
Directional wireless antenna						
	RAD-ISM-900-ANT-YAGI-3-N	2867801	1	RAD-ISM-900-ANT-YAGI-6.5-N	2867814	1
				RAD-ISM-900-ANT-YAGI-10-N	5606614	1

Antenna cable

– Various cables for connection of different antennas
– Frequency range: 900 MHz ... 5 GHz

Antenna adapter cable, N (male) -> RSMA (male)

	Technical data
General data	
Ambient temperature range	-40 °C ... 85 °C
Impedance	50 Ω

Description	Type	Order No.	Pcs./Pkt.
Antenna adapter cable			
0.5 m long	**RAD-PIG-RSMA/N-0.5**	2903263	1
1 m long	**RAD-PIG-RSMA/N-1**	2903264	1
2 m long	**RAD-PIG-RSMA/N-2**	2903265	1
3 m long	**RAD-PIG-RSMA/N-3**	2903266	1
5 m long	**RAD-PIG-RSMA/N-5**	2702140	1

Antenna cable

– Various cables for connection of different antennas
– Frequency range: 900 MHz ... 5 GHz

	Technical data	Technical data
General data		
Ambient temperature range	-40 °C ... 75 °C	-40 °C ... 75 °C
Attenuation	0.89 dB/m	0.6 dB @ 900 MHz
Impedance	50 Ω	50 Ω
Conformance/Approvals		
UL, USA/Canada	-	Class I, Div. 1, 2, Groups A, B, C, D Class II, Div. 1, 2, Groups F, G

Description	Ordering data: Type	Order No.	Pcs./Pkt.	Ordering data: Type	Order No.	Pcs./Pkt.
Antenna adapter cable						
1.2 m long, MCX (male) -> N (female)	**RAD-CON-MCX-N-SB**	2867717	1			
1.2 m long, 90° MCX (male) -> N (female)	**RAD-CON-MCX90-N-SS**	2885207	1			
1.2 m long, SMA (male) -> N (female)	**RAD-CON-SMA-N-SS**	2867403	1			
30 cm long, MCX (male) -> MCX (male)	**RAD-CON-MCX-MCX-SS**	2867607	1			
Antenna adapter cable for Ex-zone 1						
90 cm long, MCX (male) -> RPSMA (male)				**RAD-CON-MCX-RPSMA-EX**	2885621	1

Extension cable

– Various cables to extend distance between the radio and antenna

Antenna extension cable, N (male)

	Technical data
General data	
Ambient temperature range	-40 °C ... 85 °C
Impedance	50 Ω

Ordering data

Description	Type	Order No.	Pcs./Pkt.
Antenna extension cable, N connection at both ends (male)			
3 m long, attenuation (at 900 MHz) 0.96 dB	**RAD-CAB-PFP240-10**	5606124	1
6 m long, attenuation (at 900 MHz) 0.98 dB	**RAD-CAB-PFP400-20**	5606125	1
7.5 m long, attenuation (at 900 MHz) 1 dB	**RAD-CAB-PFP500-25**	5606126	1
12 m long, attenuation (at 900 MHz) 0.25 dB/m	**RAD-CAB-RG213-40**	2867377	1
15 m long, attenuation (at 900 MHz) 0.25 dB/m	**RAD-CAB-RG213-50**	2867225	1
18 m long, attenuation (at 900 MHz) 0.13 dB/m	**RAD-CAB-PFP400-60**	2867380	1
24 m long, attenuation (at 900 MHz) 0.13 dB/m	**RAD-CAB-PFP400-80**	2867393	1
30 m long, attenuation (at 900 MHz) 0.13 dB/m	**RAD-CAB-PFP400-100**	2867238	1
45 m long, attenuation (at 900 MHz) 0.08 dB/m	**RAD-CAB-PFP600-150**	2885184	1

Control cabinet/switch box

– For antennas with extension cable, with surge protection

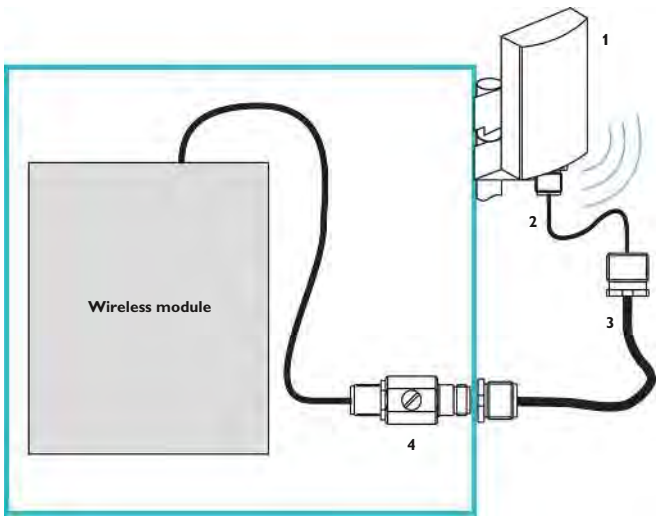

1 Antenna
2 Antenna adapter cable (pigtail)
3 Antenna extension cable
4 Surge protection

Control cabinet/switch box

– For antennas without extension cable, without surge protection

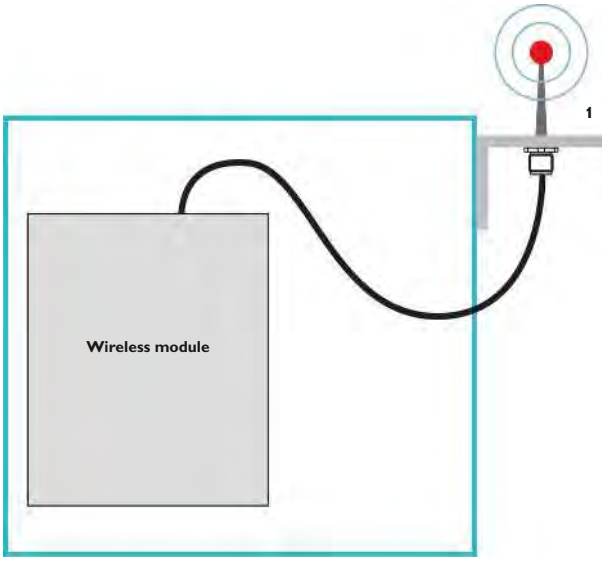

Radioline - 900 MHz wireless transmission system for serial interfaces and I/O signals

User manual

UM EN RAD-900-IFS

PHOENIX CONTACT
INSPIRING INNOVATIONS

User manual

Radioline - 900 MHz wireless transmission system for serial interfaces and I/O signals

2017-01-05

Designation: UM EN RAD-900-IFS

Revision: C

This user manual is valid for:

Wireless module:	Order No.
RAD-900-IFS	**2901540**
I/O extension modules:	
RAD-AI4-IFS	2901537
RAD-PT100-4-IFS	2904035
RAD-AO4-IFS	2901538
RAD-DI4-IFS	2901535
RAD-DI8-IFS	2901539
RAD-DOR4-IFS	2901536
RAD-DO8-IFS	2902811
RAD-DAIO6-IFS	2901533

Please observe the following notes

User group of this manual

The use of products described in this manual is oriented exclusively to qualified electricians or persons instructed by them, who are familiar with applicable standards and other regulations regarding electrical engineering and, in particular, the relevant safety concepts.

Explanation of symbols used and signal words

This is the safety alert symbol. It is used to alert you to potential personal injury hazards. Obey all safety measures that follow this symbol to avoid possible injury or death.

There are three different categories of personal injury that are indicated with a signal word.

DANGER This indicates a hazardous situation which, if not avoided, will result in death or serious injury.

WARNING This indicates a hazardous situation which, if not avoided, could result in death or serious injury.

CAUTION This indicates a hazardous situation which, if not avoided, could result in minor or moderate injury.

This symbol together with the signal word **NOTE** and the accompanying text alert the reader to a situation which may cause damage or malfunction to the device, hardware/software, or surrounding property.

This symbol and the accompanying text provide the reader with additional information or refer to detailed sources of information.

How to contact us

Internet

Up-to-date information on Phoenix Contact products and our Terms and Conditions can be found on the Internet at:
phoenixcontact.com

Make sure you always use the latest documentation.
It can be downloaded at:
phoenixcontact.net/products

Subsidiaries

If there are any problems that cannot be solved using the documentation, please contact your Phoenix Contact subsidiary.
Subsidiary contact information is available at phoenixcontact.com.

Published by

PHOENIX CONTACT GmbH & Co. KG
Flachsmarktstraße 8
32825 Blomberg
GERMANY

Should you have any suggestions or recommendations for improvement of the contents and layout of our manuals, please send your comments to:
tecdoc@phoenixcontact.com

General terms and conditions of use for technical documentation

Phoenix Contact reserves the right to alter, correct, and/or improve the technical documentation and the products described in the technical documentation at its own discretion and without giving prior notice, insofar as this is reasonable for the user. The same applies to any technical changes that serve the purpose of technical progress.

The receipt of technical documentation (in particular user documentation) does not constitute any further duty on the part of Phoenix Contact to furnish information on modifications to products and/or technical documentation. You are responsible to verify the suitability and intended use of the products in your specific application, in particular with regard to observing the applicable standards and regulations. All information made available in the technical data is supplied without any accompanying guarantee, whether expressly mentioned, implied or tacitly assumed.

In general, the provisions of the current standard Terms and Conditions of Phoenix Contact apply exclusively, in particular as concerns any warranty liability.

This manual, including all illustrations contained herein, is copyright protected. Any changes to the contents or the publication of extracts of this document is prohibited.

Phoenix Contact reserves the right to register its own intellectual property rights for the product identifications of Phoenix Contact products that are used here. Registration of such intellectual property rights by third parties is prohibited.

Other product identifications may be afforded legal protection, even where they may not be indicated as such.

Table of contents

1 Technical data 5

2 Safety regulations and installation notes 13

2.1 Installation notes 13

2.2 Installation and operation 13

2.3 Safety regulations for installation in potentially explosive areas 15

2.4 Conformance 15

3 Short description 17

3.1 Wireless module 17

3.2 I/O extension modules 18

3.3 RAD-RS485-IFS modules 19

4 Installation 21

4.1 Wireless module structure 21

4.2 Basic circuit diagram 22

4.3 Mounting/removal 22

4.4 Connecting wires 24

4.5 Connecting the power supply 25

4.6 Serial interfaces 25

4.7 Connecting the antenna 29

5 Configuration and startup 31

5.1 Default settings of the wireless module 31

5.2 Operating mode of the wireless module 32

5.3 Setting the address of the wireless module via the thumbwheel 35

5.4 Configuration via CONFSTICK 35

5.5 Copying device settings via memory stick 37

5.6 Configuration via PSI-CONF software 38

5.7 Diagnostics on the wireless module 43

5.8 Diagnostics via PSI-CONF software 48

5.9 Starting up I/O extension modules 51

5.10 Startup time of the wireless station 54

6 Serial data mode 55
6.1 Frame-based data transmission 57

7 PLC/Modbus RTU mode 59
7.1 Configuration via PSI-CONF software 60
7.2 Addressing I/O extension modules 61
7.3 Watchdog 61

8 PLC/Modbus RTU dual mode 63
8.1 Configuration via PSI-CONF software 64
8.2 Addressing I/O extension modules 65
8.3 Watchdog 65

9 Addressing I/O extension modules with Modbus RTU 67
9.1 Modbus function codes 67
9.2 Modbus protocol 67
9.3 Addressing registers 68
9.4 Module type and error code register 69
9.5 Modbus memory map 70
9.6 Error codes and formats for analog input and output values 82
9.7 RSSI signal register 83

10 Description of I/O extension modules 85
10.1 RAD-AI4-IFS - analog extension module with four inputs 85
10.2 RAD-PT100-4-IFS - extension module with four temperature inputs 89
10.3 RAD-AO4-IFS - analog extension module with four outputs 97
10.4 RAD-DI4-IFS - digital extension module with four inputs 101
10.5 RAD-DI8-IFS - digital extension module with eight inputs 104
10.6 RAD-DOR4-IFS - digital extension module with four outputs 111
10.7 RAD-DO8-IFS - digital extension module with eight outputs 115
10.8 RAD-DAIO6-IFS - analog/digital extension module with six channels 120

11 Planning wireless systems 127
11.1 Trusted Wireless 2.0 127
11.2 Planning wireless paths 129
11.3 Practical test 130
11.4 Selecting antenna cables and antennas 130
11.5 Installing antennas 131
11.6 Propagation of radio waves 132
11.7 Fresnel zone 135
11.8 Equivalent isotropically radiated power (EIRP) 137
11.9 System calculation in free space 137

12 Detecting and removing errors 139
12.1 Loopback test during serial data transmission 145

A Technical appendix 147
A 1 Configuring a PROFIBUS connection 147

B Appendixes 157
B 1 List of figures 157
B 2 List of tables 163
B 3 Index 165

1 Technical data

Description	Type	Order No.	Pcs. / Pkt.
900 MHz wireless transceiver with RS-232, RS-485 2-wire interface, expandable with I/O extension modules, with screw connection, antenna connection: RSMA (female), incl. DIN rail connector	RAD-900-IFS	2901540	1

Extension modules	Type	Order No.	Pcs. / Pkt.
Analog I/O extension module with 4 analog current inputs (0/4 mA ... 20 mA), with screw connection, incl. DIN rail connector	RAD-AI4-IFS	2901537	1
Temperature I/O extension module with 4 Pt 100 inputs (-50°C ... +250°C), with screw connection, incl. DIN rail connector	RAD-PT100-4-IFS	2904035	1
Analog I/O extension module with 4 analog current/voltage outputs (0/4 mA ... 20 mA, 0 ... 10 V), with screw connection, incl. DIN rail connector	RAD-AO4-IFS	2901538	1
Digital I/O extension module with 4 digital inputs (0 V ... 250 V AC/DC), with screw connection, incl. DIN rail connector	RAD-DI4-IFS	2901535	1
Digital I/O extension module with 8 digital inputs (0 V ... 30.5 V DC) or 2 pulse inputs (0 Hz ... 100 Hz), with screw connection, incl. DIN rail connector	RAD-DI8-IFS	2901539	1
Digital I/O extension module with 4 digital relay outputs (6 A, 250 V AC/ 24 V DC), with screw connection, incl. DIN rail connector	RAD-DOR4-IFS	2901536	1
Digital I/O extension module with 8 digital transistor outputs (30.5 V DC/200 mA), with screw connection, incl. DIN rail connector	RAD-DO8-IFS	2902811	1
Analog/digital I/O extension module with 2 digital inputs/outputs (0 V ... 250 V AC/DC) and 1 analog input (0/4 mA ... 20 mA) and output (0/4 mA ... 20 mA, 0 V ... 10 V), with screw connection, incl. DIN rail connector	RAD-DAIO6-IFS	2901533	1
Multipoint multiplexer for RS-485 bus system, can be extended with I/O extension modules. Can be used as Modbus RTU bus coupler or combined with Radioline wireless system, screw connection. Up to 99 stations, including DIN rail connector	RAD-RS485-IFS	2702184	1

Accessories	Type	Order No.	Pcs. / Pkt.
DIN rail connector for DIN rail power supply, gold-plated contacts, for DIN rail mounting, 5-pos.	ME 17,5 TBUS 1,5/ 5-ST-3,81 GN	2709561	10
CONFSTICK for easy and safe network addressing for the 900 MHz Radioline wireless module (RAD-900-IFS), unique network ID, RF band 1	RAD-900-CONF-RF1	2702122	1
Memory stick for saving individual configuration data for the Radioline wireless module	RAD-MEMORY	2902828	1
USB data cable (USB-A on IFS plug) for communicating between PCs and PHOENIX CONTACT devices with an IFS data port, e.g., RAD-900-IFS. Power supply for diagnostics and configuration via the USB port of the PC. Cable length: 2 m	RAD-CABLE-USB	2903447	1

Antennas	Type	Order No.	Pcs. / Pkt.
Omnidirectional antenna, IP65 protection, gain 5 dBi, connection N (female)	RAD-ISM-900-ANT-OMNI-FG-3-N	2867791	1
Omnidirectional antenna, IP65 protection, gain 7 dBi, connection N (female)	RAD-ISM-900-ANT-OMNI-5	2867199	1
Panel antenna, IP65 protection, gain 5 dBi, cable length 1.5 m, connection N (female)	RAD-ISM-900-ANT-YAGI-3-N	2867801	1
Omnidirectional antenna, IP65 protection, gain 8 dBi, connection N (female)	RAD-ISM-900-ANT-OMNI-FG-6-N	2885579	1
Panel antenna, IP65 protection, gain 8.5 dBi, cable length 1.5 m, connection N (female)	RAD-ISM-900-ANT-YAGI-6.5-N	2867814	1
Yagi directional antenna, 12.15 dBi gain, 2 ft. RG-213 cable with type N (female) connector	RAD-ISM-900-ANT-YAGI-10-N	5606614	1
Omnidirectional antenna, IP65 protection, cable length 6 m, connection RSMA (male)	RAD-900-ANT-OMNI-2-2-RSMA	2904801	1
2 dBi omnidirectional antenna with base plate and type N (female) connection for 900 MHz	RAD-900-ANT-OMNI-2-N	2904802	1

Antenna cables and adapters	Type	Order No.	Pcs. / Pkt.
Antenna cable, 0.5 m length, type N (male) -> RSMA (male), 50 Ω impedance	RAD-PIG-RSMA/N-0.5	2903263	1
Antenna cable, 1 m length, type N (male) -> RSMA (male), 50 Ω impedance	RAD-PIG-RSMA/N-1	2903264	1
Antenna cable, 2 m length, type N (male) -> RSMA (male), 50 Ω impedance	RAD-PIG-RSMA/N-2	2903265	1
Antenna cable, 3 m length, type N (male) -> RSMA (male), 50 Ω impedance	RAD-PIG-RSMA/N-3	2903266	1
Surge protection plug for coaxial signal interfaces, type N (female) to type N (female)	CN-UB-70DC-6-BB	2803166	1
Antenna cable, 10 ft. in length, type N (male) to type N (male), 50 Ω impedance	RAD-CAB-PFP240-10	5606124	1
Antenna cable, 20 ft. in length, type N (male) to type N (male), 50 Ω impedance	RAD-CAB-PFP400-20	5606125	1
Antenna cable, 25 ft. in length, type N (male) to type N (male), 50 Ω impedance	RAD-CAB-PFP500-25	5606126	1
Antenna extension cable, length: 40 ft.	RAD-CAB-RG213-40	2867377	1
Antenna extension cable, length: 50 ft.	RAD-CAB-RG213-50	2867225	1
Antenna extension cable, length: 60 ft.	RAD-CAB-PFP400-60	2867380	1
Antenna extension cable, length: 80 ft.	RAD-CAB-PFP400-80	2867393	1
Antenna extension cable, length: 100 ft.	RAD-CAB-PFP400-100	2867238	1
Antenna extension cable, length: 150 ft.	RAD-CAB-PFP600-150	2885184	1
Antenna extension cable, length: 200 ft.	RAD-CAB-PFP900-200	2885197	1
Vulcanizing sealing tape for external protection of adapters, cable connections, etc. against the effects of weather, roll length: 3 m	RAD-TAPE-SV-19-3	2903182	1

Power supply	Type	Order No.	Pcs. / Pkt.
24 V/100 Wp solar system. Consisting of a solar panel, prewired control cabinet with charge controller, solar batteries, fuses, surge protection and mounting material (incl. mast clips).	RAD-SOL-SET-24-100-US	5605943	1
DIN rail power supply unit, primary-switched, narrow design, output: 24 V DC/1.5 A	MINI-SYS-PS-100-240AC/24DC/1.5	2866983	1

Junction box	Type	Order No.	Pcs. / Pkt.
NEMA 4X enclosure pre-configured for wireless systems. Includes UPS, DC power supply, battery backup and surge protection for the antenna.	RAD-SYS-NEMA4X-900	2917188	1

Dimensions (nominal sizes in mm)

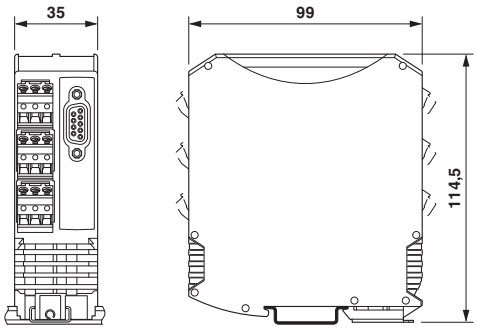

Dimensions W/H/D	35 mm/99 mm/114.5 mm

General data

Surge voltage category	II
Degree of protection	IP20
Pollution degree	2
Housing type	PA 6.6-FR, green
Inflammability class according to UL 94	V0

Supply

Supply voltage range	10.8 V DC ... 30.5 V DC
Transient surge protection	Yes
Nominal power consumption	1.7 W (30 dBm)
Power consumption	8.4 W peak (30 dBm)

Wireless interface

Antenna connection method	RSMA (female)
Direction	Bidirectional
Frequency	900 MHz
Frequency range	902 … 928 MHz
Data transmission speed (adjustable)	16 kbps 125 kbps 250 kbps 500 kbps
Receiver sensitivity	-112 dBm (16 kbps) -105 dBm (125 kbps) -102 dBm (250 kbps) -95 dBm (500 kbps)
Transmission power	1 W, maximum (adjustable)
Security	128-bit data encryption
Operating mode	I/O data (default setting, configuration via thumbwheel) Serial data (activation and configuration via PSI-CONF software) PLC/Modbus RTU mode (activation and configuration via PSI-CONF software)

System restrictions

Wireless module	
Number of supported devices	≤250 (addressing via PSI-CONF software) ≤99 (addressing via thumbwheel)
Number of possible extension modules	≤32 (per wireless module)
Wireless network	
I/O data mode	≤99 (I/O extension modules per wireless network, serial interface deactivated)
Serial data mode	0 (no I/O extension modules can be used)
PLC/Modbus RTU mode	≤99 (access to I/O extension modules via Modbus/RTU protocol)

RS-232 interface

Connection method	COMBICON plug-in screw terminal block 9-pos. D-Sub
Data rate	0.3 ... 115.2 kbps

RS-485 interface

Connection method	COMBICON plug-in screw terminal block
Connection technology	2-wire
Data rate	0.3 ... 115.2 kbps
Termination resistor (switchable via DIP switches)	390 Ω 150 Ω 390 Ω

Configuration interface

Connection method	S port (socket)

RSSI output

Number of outputs	1
Output signal, voltage	0 V ... 3 V

RF link relay output

Number of outputs	1
Contact type	PDT
Contact material	PdRu, gold-plated
Maximum switching voltage	30 V AC 60 V DC
Maximum switching current	500 mA
Electrical service life	5 x 10^5 cycles with 0.5 A at 30 V DC

Connection data

Connection method	Screw connection
Conductor cross section, solid	0.2 mm^2 ... 2.5 mm^2
Conductor cross section, stranded	0.2 mm^2 ... 2.5 mm^2
Conductor cross section, AWG/kcmil	24 ... 14
Stripping length	7 mm
Tightening torque	0.6 Nm

Status indicators

Status indicators	Green LED (supply voltage, PWR) Green LED (bus communication, DAT) RED LED (I/O error, ERR) 3 x green, 1 x yellow LED (LED bar graph receive quality, RSSI) Green LED (RS-232/485 receive data, RX) Green LED (RS-232/485 transmit data, TX)

Ambient conditions

Ambient temperature (operation)	-40°C ... 70°C (>55°C derating) -40°F ... 158°F (>131°F derating)
Ambient temperature (storage/transport)	-40°C ... 85°C -40°F ... 185°F
Permissible humidity (operation)	20% ... 85%
Permissible humidity (storage/transport)	20% ... 85%
Altitude	2000 m
Vibration (operation)	According to IEC 60068-2-6: 5g, 10 Hz ... 150 Hz
Shock	16g, 11 ms

Approvals

Conformance	FCC directive Part 15.247 ISC directive RSS 210
UL, USA/Canada	UL 508 Listed
UL hazardous locations	Class I, Div. 2, Groups A,B,C,D Class I, Zone 2 AEx nA nC IIC T4 Class I, Zone 2, Ex nA nC nL IIC T4 Gc X

Operating conditions for the extended temperature range (+55°C ... 70°C)

No function restrictions for the extended temperature range if you keep a minimum spacing of 17.5 mm between the modules. The minimum spacing is the width of a DIN rail connector.

Otherwise please observe the following restrictions:

Individual operating conditions on request.

RAD-DAIO6-IFS (2901533):

Do not use the analog loop power output (PWR1).

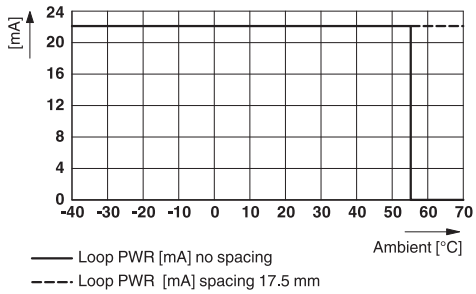

Only use the analog voltage output (U1).

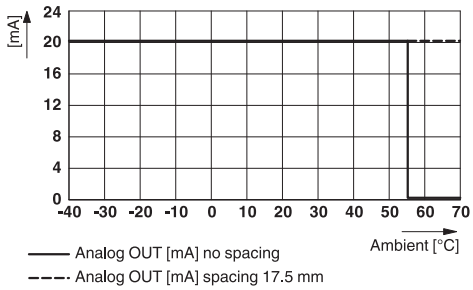

Do not use more than two of the four possible digital inputs and outputs.

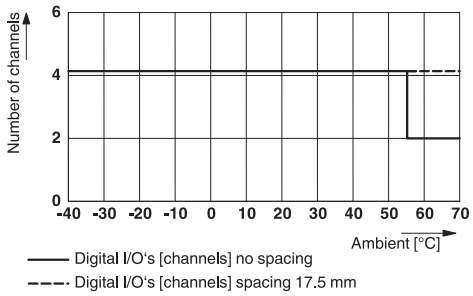

RAD-DOR4-IFS (2901536):

Maximum switching current: 2 A per channel

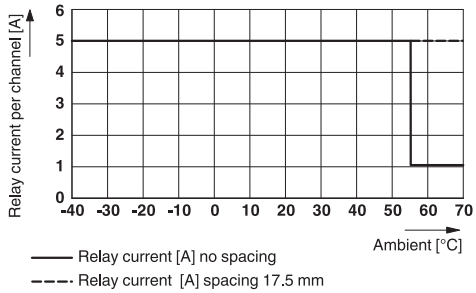

RAD-AI4-IFS (2901537):

Make sure that no more than 40 mA in total is drawn from the loop power outputs PWR_1 ... PWR_4.

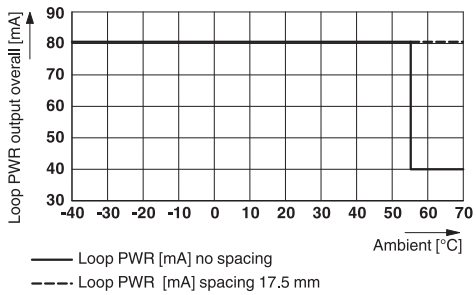

RAD-AO4-IFS (2901538):

Use a maximum of two current outputs and/or any number of voltage outputs.

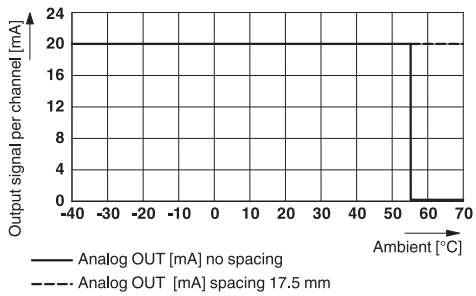

2 Safety regulations and installation notes

2.1 Installation notes

Please note that, in combination with antennas, the maximum permissible transmission power may be exceeded. Please set the transmission power via the software.

The use of antennas with a gain greater than 6 dBi may require that the transmit power be reduced from the default setting of 30 dBm. Regulations limit the equivalent isotropically-radiated power (EIRP) to 36 dBm. The EIRP may be calculated as the transmit power (Pt) minus any cable loss (Lc) plus the antenna gain (Ga).

$$EIRP = Pt - Lc + Ga$$

For example, in the case of a 12 dBi antenna used with a cable run with a 4 dB loss, the transmit power must be reduced to 28 dBm or less such that the EIRP does not exceed 36 dBm.

The PSI-CONF configuration and diagnostic software can be used to configure the transmit power.

Operation of the wireless system is only permitted if accessories available from Phoenix Contact are used. The use of other accessory components may invalidate the device approval status.

2.2 Installation and operation

Follow the installation instructions.

NOTE:
Installation, operation, and maintenance may only be carried out by qualified specialist personnel.

Error-free operation of this device can only be ensured if transport, storage, and assembly are carried out correctly and operation and maintenance are carried out with care.

When installing and operating the device, the applicable safety directives (including national safety directives), accident prevention regulations, as well as general technical regulations, must be observed.

WARNING: Risk of electric shock
During operation, certain parts of this device may carry hazardous voltages. Disregarding this warning may result in damage to equipment and/or serious personal injury.

NOTE:
Access to circuits within the device is not permitted.

Provide a switch/circuit breaker close to the device, which is labeled as the disconnect device for this device.

Provide overcurrent protection (I ≤ 6 A) in the installation.

During maintenance work, disconnect the device from all effective power sources.

NOTE:
The IP20 degree of protection (IEC 60529/EN 60529) of the device is intended for a clean and dry environment. Do not subject the device to mechanical and/or thermal loads that exceed the specified limits.

The radio should not be operated without an antenna or terminating load on the antenna connector.

NOTE:
Prolonged operation without an antenna or terminator may result in damage to the radio.

2.3 Safety regulations for installation in potentially explosive areas

Installation in areas with a danger of dust explosions

WARNING: Explosion hazard
The device has not been designed for use in potentially dust-explosive atmospheres.

Installation in Class I, Div. 2 or Zone 2

WARNING:
The device is designed for installation in Class I, Division 2/Zone 2 (UL/cUL) potentially explosive areas. Observe the specified conditions for use in potentially explosive areas.

Install the device into a housing (control or distributor box) with at least IP54 protection (EN 60529) and is certified for use in Class I, Div. 2 or Zone 2.

When installing and connecting the supply and signal circuits observe the requirements of EN 60079-14. Only devices suitable for operation in Ex zone 2 and the conditions at the application site may be connected to the circuits in zone 2.

In potentially explosive areas, only connect and disconnect cables when the power is disconnected.

Installation/removal of the devices on/from the TBUS DIN rail connector may only be performed when no voltage is applied.

2.4 Conformance

FCC

NOTE:
This equipment has been tested and found to comply with the limits for a Class A digital device, pursuant to part 15 of the FCC rules. These limits are designed to provide reasonable protection against harmful interference when the equipment is operated in a commercial environment. This equipment generates, uses and can radiate radio frequency energy and, if not installed and used in accordance with the instruction manual, may cause harmful interference to radio communications. Operation of this equipment in a residential area is likely to cause harmful interference, in which case, the user will be required to correct the interference at his own expense.

Changes or modifications not expressly approved by the party responsible for compliance could void the user's authority to operate the equipment.

This equipment complies with the FCC RF radiation exposure limits set forth for an uncontrolled environment. This equipment should be installed and operated with a minimum distance of 20 cm between the radiator and your body.

– FCC certificate: SGV-SHR-900

Industry Canada (IC)

Operation is subject to the following two conditions: (1) this device may not cause interference, and (2) this device must accept any interference, including interference that may cause undesired operation of the device.

To reduce potential radio interference to other users, the antenna type and its gain should be so chosen that the equivalent isotropically radiated power (EIRP) is not more than that permitted for successful communication.

This device has been designed to operate with the antennas listed in this document and having a maximum gain of 12 dB. Antennas not included in this list or having a gain greater than 12 dB are strictly prohibited for use with this device. The required antenna impedance is 50 Ω.

Under Industry Canada regulations, this radio transmitter may only operate using an antenna of a type and maximum (or lesser) gain approved for the transmitter by Industry Canada. To reduce potential radio interference to other users, the antenna type and its gain should be so chosen that the equivalent isotropically radiated power (EIRP) is not more than that necessary for successful communication.

– IC certificate: IC4720C-SHR900

3 Short description

Wireless communication is based on Trusted Wireless 2.0 technology. The requirement for a high-quality interference-free data transmission is fulfilled by using, for example, the frequency hopping method (FHSS) and 128-bit data encryption (AES). The Radioline wireless system uses the license-free 900 MHz ISM band.

3.1 Wireless module

In addition to an RS-232 and RS-485 2-wire interface, the **RAD-900-IFS** wireless module supports the option of directly connecting up to 32 I/O extension modules in the station structure via the DIN rail connector.

Addressing of the wireless module and I/O mapping of the extension modules is carried out quickly and easily by means of the thumbwheel on the front. You can use the yellow thumbwheel on the wireless module in order to set the RAD ID, and the white thumbwheel on the extensions modules to set the I/O-MAP address. Programming knowledge is not required. You can easily start up the wireless network without the need for software.

The PSI-CONF configuration and diagnostics software for special functions and diagnostics options in the wireless module is available free of charge.

Features

- Flexible network applications: I/O data, serial data, PLC/Modbus RTU mode
- Adjustable data rates for the wireless interface
- Easy point-to-point or network structures (star, mesh)
- Yellow thumbwheel for the unique addressing of wireless modules in the wireless network
- Integrated RS-232 and RS-485 interface
- Can be extended with up to 32 I/O modules per station via DIN rail connector (hot-swappable)
- 128-bit AES data encryption and authentication
- Unique network addressing via plug-in configuration memory (RAD-CONF) for secure, parallel operation of multiple networks with different RF bands
- Data rates and ranges can be configured using the PSI-CONF software
- UL/cUL listed for installation in Class I, Div. 2/Zone 2 environments

3.2 I/O extension modules

Various I/O extension modules are available for setting up the wireless system quickly and easily. You can therefore adapt the number and type of signals to the respective application.

Features

- White thumbwheel for easy and tool-free assignment of device pairs (I/O mapping)
- Modular structure via DIN rail connector (hot-swappable)
- Depending on module: channel-to-channel electrical isolation
- Depending on module: analog inputs or outputs (0/4 ... 20 mA/resolution 16-bit/accuracy <0.1%)
- Depending on module: digital wide-range inputs or outputs (0 ... 250 V AC/DC)
- DIP switches for HOLD/RESET behavior of outputs
- Loop power function for passive sensors

For a detailed description of the available I/O extension modules, refer to the pages listed below:

Table 3-1 Overview of I/O extension modules

Module type		Designation	Order No.	From page
Analog	4 analog inputs	RAD-AI4-IFS	2901537	85
	4 Pt 100 inputs	RAD-PT100-4-IFS	2904035	89
	4 analog outputs	RAD-AO4-IFS	2901538	97
Digital	4 digital inputs	RAD-DI4-IFS	2901535	101
	8 digital inputs or 2 pulse inputs	RAD-DI8-IFS	2901539	104
	4 digital relay outputs	RAD-DOR4-IFS	2901536	111
	8 digital transistor outputs	RAD-DO8-IFS	2902811	115
Analog/digital	1 analog input/output, 2 digital wide-range inputs/outputs	RAD-DAIO6-IFS	2901533	120