Field Sampling Plan

Remedial Investigation/Feasibility Study

Falcon Refinery Superfund Site
Ingleside, San Patricio County, Texas
EPA Identification No. TXD086278058

Remedial Action Contract 2 Full Service
Contract: EP-W-06-004
Task Order: 0088-RICO-06MC

Prepared for

U.S. Environmental Protection Agency
Region 6
1445 Ross Avenue
Dallas, Texas 75202-2733

Prepared by

EA Engineering, Science, and Technology, Inc.
405 S. Highway 121
Building C, Suite 100
Lewisville, Texas 75067
(972) 315-3922

February 2013
Revision: 00
EA Project No. 14342.88

9558650

Field Sampling Plan

Falcon Refinery Superfund Site
Ingleside, San Patricio County, Texas
EPA Identification No. TXD086278058

Remedial Action Contract 2 Full Service
Contract: EP-W-06-004
Task Order: 0088-RICO-06MC

4 February 2013

Tim Startz, PMP — Date
EA Program Manager

4 February 2013

David S. Santoro, P.E., L.S. — Date
EA Quality Assurance Officer

Brian Mueller, P.G. — Date
U.S. Environmental Protection Agency Region 6 Task Order Monitor

CONTENTS

Page

LIST OF FIGURES AND TABLES
LIST OF ACRONYMS AND ABBREVIATIONS
DISTRIBUTION LIST

1. PROJECT DESCRIPTION AND OBJECTIVES 1
   1.1 Site Background and Description....1
   1.2 Purpose of the Investigation and Sampling Events....2
   1.3 Project Objectives 2

2. METHODOLOGY 6
   2.1 SAMPLE COLLECTION....6
      2.1.1 Monitoring Well Installation....7
      2.1.2 Soil Sampling....8
      2.1.3 Sediment and Surface Water Sampling 8
      2.1.4 Ground Water Sampling 9
      2.1.5 Soil Vapor Sampling....10
      2.1.6 Fish Tissue 10
      2.1.7 Soil Physical Properties Sampling....10
      2.1.8 Land Survey (Global Positioning System/Vertical Survey) 11
      2.1.9 Decontamination....11
   2.2 SAMPLE DESIGNATION....11
      2.2.1 Soil and Sediment Sample Designation....12
      2.2.2 Ground Water Sample Designation 12
      2.2.3 Surface Water Sample Designation 12
      2.2.4 Background Soil and Sediment Sample Designation 12
      2.2.5 Background Ground Water Sample Designation....13
      2.2.6 Background Surface Water Sample Designation....13
      2.2.7 Field Duplicate Sample Designation 13
      2.2.8 Matrix Spike/Matrix Spike Duplicate Sample Designation (for organic analyses)....13
      2.2.9 Matrix Spike/Matrix Duplicate Sample Designation (for inorganic analyses)....13
      2.2.10 Trip, Field, and Equipment Rinsate Blank Sample Designation 14
   2.3 SAMPLE CONTAINER, VOLUME, PRESERVATION, AND HOLDING TIME REQUIREMENTS....14
   2.4 SAMPLE HANDLING AND CUSTODY 15
   2.5 MANAGEMENT OF INVESTIGATION-DERIVED WASTE 16
   2.6 CONSENT FOR PROPERTY ACCESS....16
   2.7 ANALYTICAL METHODS....16
      2.7.1 Field Analytical Methods....16
      2.7.2 Fixed-Laboratory Analytical Methods....16
   2.8 QUALITY CONTROL REQUIREMENTS 17

3. FIELD IMPLEMENTATION 19
3.1 AOC-1 19
3.2 AOC-2 19
3.3 AOC-3 19
3.4 AOC-4 20
3.5 AOC-5 20
3.6 AOC-6 20
3.7 AOC-7 21
3.8 Background locations 21

4. REFERENCES 22

APPENDIX A: STANDARD OPERATING PROCEDURES (PROVIDED ELECTRONICALLY ON CD)
APPENDIX B: SAMPLE DESIGN MATRIX

LIST OF FIGURES

Number	Title
1	Site Map
2	AOC-1 Sample Locations
3	AOC-2 Sample Locations
4	AOC-3 Sample Locations
5	AOC-4 Sample Locations
6	AOC-5 Sample Locations
7	AOC-6 Sample Locations
8	AOC-7 Sample Locations
9	Background Sample Locations

LIST OF TABLES

Number	Title
1	Standard Operating Procedures
2	Monitored Surface Water Quality Parameters
3	Monitored Well Water Quality Parameters
4	Required Volume, Containers, Preservatives, and Holding Times
5	Frequency of Field Quality Control Samples

LIST OF ACRONYMS AND ABBREVIATIONS

ADSM	Alternatives Development and Screening Memorandum
AOC	Area of Concern
bgs	Below ground surface
CLP	Contract Laboratory Program
COPC	Contaminant of potential concern
CSM	Conceptual Site Model
DESR	Data Evaluation Summary Report
DQO	Data quality objective
EA	EA Engineering, Science, and Technology, Inc.
EPA	U.S. Environmental Protection Agency
ERA	Ecological risk assessment
FS	Feasibility Study
FSP	Field Sampling Plan
ft	foot
GPS	Global positioning system
HHRA	Human health risk assessment
IDW	Investigation-derived waste
MD	Matrix duplicate
MS	Matrix spike
MSD	Matrix spike duplicate
NORCO	National Oil Recovery Corporation
OS	Original sample
PCB	Polychlorinated biphenyl
QA	Quality assurance
QAPP	Quality Assurance Project Plan
QC	Quality control
RAC	Remedial Action Contract
RACA	Remedial Alternatives Comparative Analysis
RAGS	Risk Assessment Guidance for Superfund

RAO	Remedial action objective
RI	Remedial Investigation
ROD	Record of Decision
SAP	Sampling and Analysis Plan
Site	Falcon Refinery Superfund Site
SOP	Standard operating procedure
SOW	Statement of Work
SVOC	Semi-volatile organic compound
TCLP	Toxicity Characteristic Leaching Procedure
TDS	Total dissolved solid
TOC	Top of casing
TRC	TRC Environmental Corporation
TSS	Total suspended solids
VOC	Volatile organic compound
VSP	Visual Sample Plan

DISTRIBUTION LIST

U.S. Environmental Protection Agency

Name: Michael Pheeny
Title: EPA Region 6 Contracting Officer (Letter Only)

Name: Rena McClurg
Title: EPA Region 6 Project Officer (Letter Only)

Name: Brian Mueller
Title: EPA Region 6 Task Order Monitor

Name: Anna Milburn
Title: EPA Region 6 Ecological Risk Assessor

Name: Kenneth Shewmake
Title: EPA Region 6 Ecological Risk Assessor

Texas Commission on Environmental Quality

Name: Phillip Winsor
Title: Project Manager

Name: Vickie Reat
Title: Ecological Risk Assessor

Other State/Federal Natural Resource Trustees

Name: Jessica White
Title: National Oceanic and Atmospheric Association, RRC Region 6

Name: Clare Lee
Title: U.S. Fish and Wildlife Services (USFWS) Contaminant Biologist

Name: Barry Forsythe
Title: USFWS

Name: Ron Brinkley
Title: USFWS Contaminant Biologist

Name: Don Pitts
Title: Texas Parks and Wildlife Department (TPWD) Program Director

Name: Andy Tirpak
Title: TPWD NRDA Trustee

Name: Jane Sarosdy
Title: Texas General Land Office (TGLO) Director, NRDA Trustee

Name: Tommy Mobley
Title: TGLO Tech. Program Manager

EA Engineering, Science, and Technology, Inc.

Name: Tim Startz
Title: Program Manager (Letter Only Via E-mail)

Name: Robert Owens
Title: Project Manager

Name: File
Title: EA Document Control File

1. PROJECT DESCRIPTION AND OBJECTIVES

EA Engineering, Science, and Technology, Inc. (EA) has been authorized by the U.S. Environmental Protection Agency (EPA), under Remedial Action Contract Number EP-W-06-004, Task Order 0088-RICO-06MC, to conduct a Remedial Investigation/Feasibility Study (RI/FS) at the Falcon Refinery Superfund Site (site). EA has prepared this Field Sampling Plan (FSP) in accordance with:

(1) Specifications provided in the EPA Statement of Work (SOW) (Revision 00), dated 3 February 2012 (EPA 2012)

(2) EPA-approved Work Plan and Cost Estimate (Revision 01), dated 24 April 2012 (EA 2012a).

This FSP was prepared in conjunction with the Quality Assurance Project Plan (QAPP) (EA 2012b). The QAPP documents the planning, implementation, and assessment procedures, as well as specific quality assurance (QA) and quality control (QC) activities. The FSP details the field sampling schedule, rationales for sample selection, and sampling methods required to perform the RI/FS. Together, the QAPP and FSP present the overall approach for implementing the RI/FS field program.

This FSP is supported by the following site-specific plans:

- Health and Safety Plan (EA 2012c) specifies employee training, protective equipment, personal air monitoring procedures, medical surveillance requirements, standard operating procedures, and contingency planning procedures

- Site Management Plan (EA 2012d) addresses site access, security, contingency procedures, management responsibilities, data management, and waste disposal.

The EPA Region 6 Task Order Monitor, Mr. Brian Mueller, is responsible for the project oversight. The Project Officer for EPA Region 6 is Ms. Rena McClurg. The Contracting Officer for EPA Region 6 is Mr. Michael Pheeny. EA will perform tasks under this Task Order in accordance with this FSP. The EA Project Manager, Mr. Robert Owens, is responsible for implementing activities required by this Task Order.

1.1 SITE BACKGROUND AND DESCRIPTION

The site is located 1.7 miles southeast of State Highway 361 on FM 2725 at the north and south corners of the intersection of FM 2725 and Bishop Road near the City of Ingleside in San Patricio County, Texas (Figure 1). The site occupies approximately 104 acres and consists of a refinery that operated intermittently and has not produced hydrocarbon products in several years. The refinery is currently inactive, except for a crude oil storage operation being conducted by Superior Crude Gathering, Inc. When in operation the refinery had a capacity of 40,000 barrels

per day and the primary products consisted of naphtha, jet fuel, kerosene, diesel, and fuel oil. The refinery also historically transferred and stored vinyl acetate, a substance not excluded under the petroleum exclusion.

Surface water drainage from the site enters the wetlands along the southeastern section of the abandoned refinery. The wetlands connect to the Intracoastal Waterway and Redfish Bay, which connects Corpus Christi Bay to the Gulf of Mexico. The site is bordered by wetlands to the northeast and southeast, residential areas to the north and northwest, Plains Marketing L.P. (a crude oil storage facility) to the north, and several construction companies to the west and south. Other portions of the site include above-ground and buried piping leading from the site to dock facilities, owned by National Oil Recovery Corporation (NORCO), at Redfish Bay.

1.2 PURPOSE OF THE INVESTIGATION AND SAMPLING EVENTS

Phase I of the RI was performed by Kleinfelder on behalf of the NORCO in 2007. The number of soil, sediment, ground water, and surface water judgmental or random grid locations sampled during Phase I were initially determined by the site team and were not based on the distribution of constituents, if any, at the site. Phase I helped to determine the distribution of constituents at the site and develop a Conceptual Site Model (CSM).

The data from Phase I was analyzed and the standard deviation, alpha and beta error rates, width of the gray region, and a threshold value (screening value) were input into Visual Sample Plan (VSP) software algorithms to statistically determine the minimum number of samples required to meet the data quality objectives (DQOs) for the site. This analysis served as the basis for the Field Sampling Plan Addendum No. 1a (TRC Environmental Corporation (TRC) 2011), prepared by TRC on behalf of NORCO for Phase II sampling.

The TRC Field Sampling Plan Addendum No. 1a (TRC 2011) and the Quality Assurance Project Plan Addendum No. 01 by Kleinfelder (2009a) serve as references for this FSP. The Phase I investigation results and conclusions and the CSM presented in this FSP are taken from these reference documents and further evaluated by EA.

The purpose of this investigation is to collect Phase II ground water, surface water, surface and subsurface soils, and sediment data to support an RI/FS. The RI/FS process will allow the EPA to select a remedy that eliminates, reduces, or controls risks to human health and the environment. The goal is to develop the minimum amount of data necessary to support a Record of Decision (ROD). The EPA RI/FS SOW (EPA 2012a) and EPA-approved Work Plan (EA 2012a) sets forth the framework and requirements for this effort.

1.3 PROJECT OBJECTIVES

The primary objectives of the Phase II RI/FS are to determine the nature and extent of contamination, to identify contamination migration pathways, and to gather sufficient information so that the EPA can select a remedy that eliminates, reduces, or controls risks to human health and the environment. Data must be of sufficient quality and quantity to perform an ecological risk assessment (ERA) and human health risk assessment (HHRA) for the site.

Specifically, the Phase II RI involves multimedia environmental sampling of the site. EA will implement the following key components during the RI/FS:

- **Monitor Well Installation**

  — Up to 17 permanent monitoring wells will be installed and developed to evaluate potential impacts to ground water. The average depth of each of the permanent wells is estimated to be approximately 15 feet (ft) below ground surface (bgs).
  — Up to 10 temporary monitoring wells will be installed and developed to evaluate background ground water. The average depth of each of the temporary wells is estimated to be approximately 15 ft bgs.
  — Slug tests will be performed in one or 2 of the permanent monitor wells to characterize aquifer characteristics.
  — The top of casing elevations will be surveyed.

- **Soil Sampling**

  — Onsite and offsite surface and subsurface soil sampling (up to 261 samples) will be collected from surface soil and subsurface soil from soil borings installed to an approximate depth to 15 ft bgs to assess potential presence of contaminants of potential concern (COPCs) of high toxicity and/or high mobility, define the nature and extent, characterize waste to allow for disposal option evaluation in the FS, evaluate whether COPCs are migrating offsite, data to be used in the ERA and HHRA.
  — Surface and subsurface soil samples will be analyzed for volatile organic compounds (VOCs), semi-volatile organic compounds (SVOCs), and metals. The EPA TOM will determine the number of samples to be analyzed for polychlorinated biphenyls (PCBs) and PCB congeners based on the frequency of detection of these chemicals from previous data collected by the Potentially Responsible Party (PRP) for the site. Twenty percent of the samples will be analyzed for herbicides/pesticides.

- **Ground Water Sampling**

  — Onsite and offsite ground water investigation (up to 27 samples) will be collected from permanent and temporary monitoring wells to determine the nature and extent of ground water COPCs. Permanent and temporary monitor well data will be used in the HHRA and ERA. Data collected during the onsite ground water investigation will also be used to update the pathway and receptor analysis presented in the CSM, if necessary.
  — Filtered and unfiltered samples will be analyzed from each location.
  — Ground water samples will be analyzed for VOCs, SVOCs, and metals. The EPA TOM will determine the number of samples to be analyzed for PCBs and PCB congeners based on the frequency of detection of these chemicals from previous data collected by the PRP for the site. Twenty percent of the samples will be analyzed for herbicides/pesticides.

- **Surface Water and Sediment Sampling**

  — Offsite wetlands, intracoastal, and background surface water (up to 63 samples) and sediment (up to 34 samples) investigation will be performed to define the nature and extent of COPCs, provide data to be used in the HHRA and ERA, and to update the pathway and receptor analysis presented in the CSMs, if necessary.
  — Sediment and surface water samples will be analyzed for VOCs, SVOCs, and metals. Surface water samples will also be analyzed for total suspended solids (TSS). The EPA TOM will determine the number of samples to be analyzed for PCBs and PCB congeners based on the frequency of detection of these chemicals from previous data collected by the PRP for the site. Twenty percent of the samples will be analyzed for herbicides/pesticides.

- **Soil Vapor Sampling**

  — Soil vapor samples will be collected from permanent and temporary monitoring well locations (up to 27 samples) to assess soil to vapor contaminant transport.
  — Samples will be analyzed for VOCs.

- **Permeability Sampling**

  — Soil matrix samples (up to 60 samples) from the vadose zone (above the water table) and the saturated zone (below the water table) will be collected to further develop the CSM and assess contaminant transport.
  — Samples will be analyzed for fraction organic content, bulk density, moisture content, specific gravity, wet sieve, and/or Atterberg limits.

- **Investigative Derived Waste Sampling**

  — Aqueous and solid samples of drummed waste accumulated as a result of the field investigation will be sampled, analyzed, and profiled. A full hazardous waste determination will be performed on these samples. The quantity of samples will be dependent on the amount of waste generated.

- **Ecological Characterization**

  — An ecological characterization may be conducted if the previous ecological characterization is not of the quality needed for this RI/FS.
  — Fish tissue samples will be collected and analyzed based on the results of the Screening Level Ecological Risk Assessment (SLERA). Samples will be analyzed for parameters as directed by EPA, but will likely include lipids, pesticides, PCBs, metals, and SVOCs.

- **Data Evaluation Summary Report (DESR)**

  — A DESR will be prepared and submitted, which will include the data validation reports for the collected data. The purpose of the DESR is to document and summarize the analytical data collected during the RI/FS, including data quality and usability as related to the site-specific DQOs.

- **Risk Assessment**

  — An HHRA will be performed to evaluate commercial/industrial, residential, construction worker, recreational, and trespasser exposure scenarios for areas identified during this investigation, as appropriate. Areas may be further subdivided into individual exposure areas based on the historical use, presence of contaminants, potential reuse, etc. An unrestricted reuse (i.e., residential) exposure scenario will be evaluated for areas of concern (AOCs) so that a 'no action' alternative may be evaluated in the FS.

  — An ERA will be performed to characterize and quantify, where appropriate, the current and potential ecological risks that would prevail if no further remedial action is taken. The ERA will also incorporate the ecological characterization that may be conducted as part of the field investigation.

- **RI Report**

  — The RI report will accurately establish the site characteristics. Potential sources of contamination, the nature and extent of contamination, and migration pathways will be identified.

- **Alternatives Development and Screening Memorandum (ADSM)**

  — Remedial alternatives will be developed and will undergo full evaluation. The technical memorandum will establish remedial action objectives (RAOs); general response actions; screening of applicable remedial technologies; development of remedial alternatives; screening of the remedial alternatives for effectiveness, implementability, and cost; summarize the alternatives as they relate to applicable or relevant and appropriate requirements; and summarize the screening process in relation to RAOs.

- **Remedial Alternatives Comparative Analysis (RACA) Report**

  — A comparative analysis of the remedial alternatives developed in the Alternatives Development and Screening Memorandum (ADSM) will be performed based on cost, implementability, and effectiveness evaluation criteria.

- **FS Report**

  — Following screening and evaluation of the remedial alternatives, the FS report will be prepared to provide a detailed analysis of alternatives and cost-effectiveness analysis and will include the nine criteria in the National Contingency Plan.

- **Post-RI/FS Support**

  — Technical and administrative support will be provided that is required for preparation of the Proposed Plan and ROD.

- **Project Closeout**

Necessary activities will be performed to close out the Task Order in accordance with contract requirements.

2. METHODOLOGY

The following section includes sample collection, sample designation, analytical methods, and sample processing.

2.1 SAMPLE COLLECTION

This section describes the procedures for sample collection. Samples will be collected using the methods documented in the standard operating procedures (SOPs). The SOPs that will be implemented during this field program are listed in Table 1 and are provided electronically on CD in Appendix A.

TABLE 1 STANDARD OPERATING PROCEDURES

SOP Number	SOP Title
001	Labels
002	Chain-of-Custody Form
003	Subsurface/Utility Clearance
004	Sample Packing and Shipping
005	Field Decontamination
006	Summa Canister Sampling
007	Surface Water Sampling
008	pH Measurement
009	Temperature Measurement
010	Water Level and Well Depth Measurements
012	Specific Conductance Measurements
013	Monitoring Well Sample Collection
016	Surface Water, Groundwater, and Soil/Sediment Logbooks
019	Monitoring Well Installation

SOP Number	SOP Title
021	Sediment Sampling
022	Sediment and Benthic Sampling
025	Soil Sampling
028	Well Boring and Abandonment
035	Small Boat Operations
036	Turbidity Measurements
037	Dissolved Oxygen Measurements
038	Redox Potential Measurements
039	Sample Preservation and Container Requirements
042	Disposal of Investigation-Derived Material
047	Direct-Push Technology Sampling
048	Low-Flow Sampling
051	Low-Flow Purge and Sampling With Dedicated Pumps
054	Fish Tissue Analysis

Sample collection and handling procedures for samples will follow the EPA Contract Laboratory Program (CLP) protocols in accordance with EPA's Contract Laboratory Program Guidance for Field Samplers (2011). During sample collection, preparation, and field analysis, the chain of custody will be maintained and documented. Sample locations will be documented photographically and sketched in the field logbook; an accompanying photograph log will be completed in the field logbook. Sample locations may be adjusted based on existing field conditions to accommodate the existence of buried debris, concrete slabs, buried utilities, and permanent structures, as necessary. Coordinates for the sample locations will be obtained using a hand-held global positioning system (GPS) device following the procedures outlined in Section 2.1.5.

The decontamination of the sampling equipment will follow general practices listed in SOPs 005 (Appendix A) and Section 2.1.9.

2.1.1 Monitoring Well Installation

EA will supervise subcontractor installation, development, and surface completion of monitoring wells within the site. Permanent monitoring wells will be drilled with a hollow stem auger and constructed in accordance with SOP 019 (Appendix A). Temporary monitoring wells will be installed within the direct push sample boreholes in accordance with standard industry practices.

Before drilling each boring, the down-hole equipment, rig, and other equipment (as necessary) will be steam-cleaned or high-pressure washed using hot water, followed by a pressurized potable water rinse to minimize cross contamination. Special attention will be given to the threaded section of the casings and to the drill rods. The cleaned equipment will not be handled with soiled gloves. The drilling equipment will be steam-cleaned or high-pressure washed at the completion of the project to ensure that no contamination is inadvertently transported from the site. The decontamination of the equipment will follow general practices listed in SOPs 005 and 019 (Appendix A) and Section 2.1.9. The water derived from decontamination will be collected and temporarily stored at the staging area for characterization.

The lithologic logs will be prepared by examining soil cuttings, without the collection of soil samples. The water table will be noted by gauging the borehole through augers. Once the water table is reasonably identified, the soil borings will be advanced an additional 12 ft, with the drilling terminated so water levels can recover.

The monitoring wells will be developed following the correct completion of each well. The wells will be allowed to set 48 hours prior to well development. Down-hole equipment, including surge blocks and/or pumps, will be decontaminated before and after use. Water derived from decontamination will be collected and temporarily stored at the staging area for characterization.

2.1.2 Soil Sampling

During the RI field program, EA will collect surface and subsurface soil samples from the site and background areas in accordance with SOPs 025, and 047 (Appendix A).

Surface and subsurface soil samples will be collected from 0- to 0.5-ft bgs, 0.5- to 2-ft bgs, and 2-ft to top of water table. Samples will be collected via direct push borings with continuous sampling at soil sampling locations. Samples will be collected via hollow stem auger with either continuous split spoon sampling or Shelby tube at monitoring well locations. Field personnel will log the material types within each boring or sampling location to assist in the understanding of site geology and for the nature and extent evaluation. Field personnel will also continuously screen the soil with a FID/PID at 2-ft intervals to the total depth of the boring.

Grab samples from each of the three sample intervals (from 0- to 0.5-ft bgs, 0.5- to 2-ft bgs, and 2-ft to top of water table) will be collected for VOC analysis. The depth at which the highest PID/FID reading in the subsurface is observed will be used to select the location of the grab sample for the 2-ft to top of the water table sample interval. Homogenized soil samples for all three sample intervals will be collected for all other laboratory analyses.

Following completion of sampling activities, borings will be abandoned in accordance with SOP 028 (Appendix A).

Samples for fixed laboratory analysis will be processed and handled in accordance with the CLP Guidance for Field Samplers (EPA 2011) and/or SOP 004 (Appendix A), as applicable.

2.1.3 Sediment and Surface Water Sampling

During the RI field program, EA will collect sediment from various areas of the site in accordance with SOPs 007, 021, and 022 (Appendix A).

Grab samples of surface water will be collected using a dedicated disposable dipper. Field personnel will collect the field parameter readings specified in Table 2. Sediment samples will be collected using a Ponar Dredge or sediment coring device. Grab samples will be collected from 0- to 0.5-ft bgs at sediment sample locations. All sediment sample locations will coincide

with surface water sample locations. Surface water will be collected before sediment samples at these locations.

Samples for fixed laboratory analysis will be processed and handled in accordance with the CLP Guidance for Field Samplers (EPA 2011) and/or SOP 004 (Appendix A), as applicable.

TABLE 2 MONITORED SURFACE WATER QUALITY PARAMETERS

Parameter	Field-based Method
Total dissolved solids	Water quality meter
pH	Water quality meter
Specific conductance	Water quality meter
Water temperature	Water quality meter
Oxidation-reduction potential	Water quality meter
Turbidity	Water quality meter

2.1.4 Ground Water Sampling

During the RI field program, EA will collect the following ground water samples for analysis:

- Following their installation and development, EA will collect ground water samples from the newly installed permanent and temporary monitoring wells.

These data will be utilized to evaluate potential site contributions to ground water. In addition, private and municipal well sampling data will be important for the domestic use evaluation of ground water in the HHRA.

Monitoring wells will be purged and sampled using low-flow (micro-purge) sampling protocol at a maximum flow rate of 0.5 liter per minute (SOP 048, Appendix A). Low-flow sampling requires that minimal drawdown is maintained throughout purging of the well to ensure that the water being purged is in fact entering the pump from the formation, and not as a result of lowering water levels within the well. Water level measurements should be collected prior to pumping as well as periodically to confirm that drawdown is not occurring (SOP 010, Appendix A). The pump intake will be positioned near the middle of the screened water interval. Ground water sampling documentation will include records of the volume of water removed from the well, the depth of the pump intake, and depth-to-water measurements prior to and at the completion of purging and sampling, flow rate, and the identification and order of samples collected. Water quality parameters summarized in Table 3 will be collected throughout purging and logged for wells on ground water field sampling forms.

TABLE 3 MONITORED WELL WATER QUALITY PARAMETERS

Parameter	Field-based Method
Dissolved oxygen	Water quality meter
pH	Water quality meter
Specific conductance	Water quality meter
Water temperature	Water quality meter
Oxidation-reduction potential	Water quality meter
Turbidity	Water quality meter

Ground water will be purged until measurements of temperature and specific conductance have stabilized to within 10 percent, and pH has stabilized to within ±0.1 pH units. Other parameters will be monitored during purging, including turbidity and oxidation-reduction potential, but will not be used as stabilizing criteria. The measurement of field parameters is further described in SOPs 008, 009, 012, 036, 037, 038, and 048 (Appendix A).

2.1.5 Soil Vapor Sampling

Soil vapor samples will be collected from monitoring well borings according to SOP 006 (Appendix A). Grab samples (duration of 10–30 seconds) will be collected in Summa canisters using a fixed orifice, capillary, or adjustable micro-metering valve.

Samples for fixed laboratory analysis will be processed and handled in accordance with the CLP Guidance for Field Samplers (EPA 2011) and/or SOP 004 (Appendix A), as applicable.

2.1.6 Fish Tissue

The details of the fish sampling and analyses are dependent upon the results of the soil, sediment, and surface water sampling. A FSP addendum detailing the activities will be submitted prior to any fish sampling. The EPA and the U.S. Fish and Wildlife Service will consider techniques for the collection of fish tissue data, based on the results of the SLERA. Whole fish and fish fillet samples will be collected during the Phase II investigation and prepared for laboratory analysis submittal according to SOP 054 (Appendix A).

2.1.7 Soil Physical Properties Sampling

Soil matrix samples will be collected from the vadose zone (above the water table) and the saturated zone (below the water table) to be analyzed for saturated hydraulic conductivity, initial gravimetric and volumetric water content, dry bulk density, calculated total porosity, and total or fraction organic carbon. Soil samples retrieved for physical properties analyses will be from non-contaminated onsite locations.

2.1.8 Land Survey (Global Positioning System/Vertical Survey)

During the RI field program, EA will survey sample locations using portable GPS equipment. The determination of locations and top of casing (TOC) elevations for newly installed monitoring wells will be subcontracted to a local Registered Professional Licensed Surveyor in the State of Texas. Elevations for each new monitoring well TOC will be measured and referenced to a relative benchmark. After field activities are complete, the surveyor will draft survey maps illustrating the information collected.

Private and municipal supply wells that have not been previously surveyed may be surveyed using a GPS unit. GPS Data Attributes for each well position will be logged and include:

- Latitude and longitude
- Collector name
- Collection method
- Datum
- Maximum Positional Dilution of Precision
- GPS date and time
- Total positions collected at each well location.

2.1.9 Decontamination

Re-usable field equipment utilized during the RI/FS will be decontaminated prior to and after use in accordance with SOP 005 (Appendix A) or using the prescribed method below for sediments and sludges impacted by organic COPCs.

- Rinse equipment with site water
- Wash equipment with Liquinox or similar product
- Rinse equipment with distilled water
- Rinse equipment with methanol
- Rinse equipment with distilled water.

The decontamination of field equipment will occur in buckets, plastic containers, or other similar containers with sealing lids, and the resulting fluid will be transferred to 55-gallon investigation-derived waste (IDW) drums staged at a designated staging area (Support Zone). The decontamination water will be properly sampled and disposed of following local, State, and Federal guidelines.

2.2 SAMPLE DESIGNATION

Each sample will be identified with a unique alphanumeric designation according to the following sample classifications:

2.2.1 Soil and Sediment Sample Designation

Soil and sediment sample designation will include three fields separated by dashes. For example: SO1-02-4.0-4.5.

- The first field, "SO1-02" identifies the sample type and number within a given AOC. The alpha characters are the designation for type of sample: Soil ("SO") or Sediment ("SD"). Soil samples collected from monitor well borings will keep the alpha characters associated with the well ("MW" for permanent monitoring wells and "TW" for temporary monitoring wells). The first numerical character represents the AOC: AOC-1 ("1"). The numerical character following the dash is the distinct number for the random grid sample location.
- The second field, "4.0" represents the top of the sample interval measured in ft bgs.
- The third field, "4.5" represents the bottom of the sample interval measured in ft bgs.

2.2.2 Ground Water Sample Designation

Permanent and temporary MW groundwater sample designations will include two fields separated by a dash. For example: MW-05.

- The two or three alpha characters in the first field, "MW" identify the sample as having been collected from a permanent monitoring well and "TMW" identify the sample as having been collected from a temporary monitor well. The second field, "05," represents the numerical designation for the monitor well number. If necessary to sample deeper aquifers during Phase II operations, an additional field will be added to the sample designations to show which aquifer is being assessed.

2.2.3 Surface Water Sample Designation

The surface water sample designation will include two fields separated by a dash. For example: SW3-01.

- The two alpha characters in the first field, "SW" identify the sample as a surface water (SW) sample.
- The numerical character, "3" identifies the AOC.
- The second field, "01" represents the numerical designation of the surface water sample.

2.2.4 Background Soil and Sediment Sample Designation

Field background samples will be identified similar to the onsite soil samples. The numerical character that identifies the AOC will be replaced with a "B" to designate it as a background sample. For example: SOB-01-0.0-0.5.

- The first field, "SOB," identifies the sample as a soil background sample, followed by "01" which represents the numerical designation of the sample. If the sample is a sediment sample, the designation SDB will be used.
- The second field, "0.0" represents the top of the sample interval measured in ft bgs.
- The third field, "0.5" represents the bottom of the sample interval measured in ft bgs.

2.2.5 Background Ground Water Sample Designation

Ground water background samples will be collected from temporary monitor wells (TW). The background groundwater samples designation will include two fields separated by a dash. For example: TWB-10.

- The alpha characters in the first field, "TW" identify the sample as having been collected from a temporary monitoring well and "B" identifies the sample as a background sample.
- The second field, "10," represents the numerical designation for the temporary monitor well.

2.2.6 Background Surface Water Sample Designation

Background surface water samples will be collected from wetlands. The background surface water designation will include two fields separated by a dash. For example: SWB-20.

- The alpha characters in the first field, "SWB" identify the sample as a surface water background sample.
- The numeric characters in the second field, "20" represent the numerical designation for the sample.

2.2.7 Field Duplicate Sample Designation

Field duplicate samples will be identified by adding a "D" to the end of the sample designations described above. For example: MW-05D.

2.2.8 Matrix Spike/Matrix Spike Duplicate Sample Designation (for organic analyses)

Matrix Spike (MS) and Matrix Spike Duplicate (MSD) organic samples will be identified by adding an "MSD" to the end of the sample designations described above, for example: MW-05MSD. These samples will also be marked as MS/MSD on the chain-of-custody.

2.2.9 Matrix Spike/Matrix Duplicate Sample Designation (for inorganic analyses)

MS and Matrix Duplicate (MD) inorganic samples will be identified by adding an "MD" to the end of the sample designations described above. For example: MW-05MD. These samples will also be marked as MS/MD on the chain-of-custody.

2.2.10 Trip, Field, and Equipment Rinsate Blank Sample Designation

Field blank (FB), trip blank (TB), and equipment rinsate blank (ER) samples will be identified by two fields beginning with "FB", "TB", or "ER" respectively, followed by a dash "-", then the date in the following format YYMMDD. For example a trip blank for samples submitted on September 17, 2012 would have the following sample identification number: "TB-120917." If two field, trip, or equipment rinsate blanks will be submitted on the same day, an additional field will be added. For example: TB-120917-1 and TB-120917-2.

2.3 SAMPLE CONTAINER, VOLUME, PRESERVATION, AND HOLDING TIME REQUIREMENTS

Table 4 specifies the required sample volume, container type, preservation technique, and holding time for each analysis that is to be conducted during each phase of sampling. Required containers, preservation techniques, and holding times for field QC samples, such as field duplicates, will be the same as for investigative samples, but may require additional volumes.

TABLE 4 REQUIRED VOLUME, CONTAINERS, PRESERVATIVES, AND HOLDING TIMES

Parameter	Method	Volume and Container	Preservatives	Holding Time [a]
Investigative Solid Samples				
Metals (including mercury)	CLP ISM01.3	One 8-ounce amber glass jar with Teflon™-lined cap	Store at 4±2°C	180 days (28 days for mercury)
VOCs	CLP SOM01.2	Three 5-gram EnCore samplers and One 4-ounce glass jar with Teflon™-lined cap	Store at 4±2°C	48 hours
SVOCs	CLP SOM01.2	One 8-ounce amber glass jar with Teflon™-lined cap	Store at 4±2°C	14 days
Pesticides	CLP SOM01.2	One 8-ounce amber glass jar with Teflon™-lined cap	Store at 4±2°C	14 days
PCBs as Aroclors	CLP SOM01.2	One 8-ounce amber glass jar with Teflon™-lined cap	Store at 4±2°C	14 days
Herbicides	SW-846 8151	One 8-ounce amber glass jar with Teflon™-lined cap	Store at 4±2°C	14 days
PCB Congeners	EPA 1668B	One 8-ounce amber glass jar with Teflon™-lined cap	Store at 4±2°C	360 days
TOC	Walkley Black	One 8-ounce amber glass jar with Teflon™-lined cap	Store at 4±2°C	28 days
Particle Size	ASTM D422	500 grams of material in sealed plastic bag	None	None
Lipids	--	Amber glass jar with Teflon™-lined cap	Store at 4±2°C	1 year
Investigative Water Samples				

Parameter	Method	Volume and Container	Preservatives	Holding Time [a]
Metals (including mercury)	CLP ISM01.3	One 1-liter HDPE bottle	Nitric acid to pH ≤ 2; Store at 4±2°C	180 days (28 days for mercury)
VOCs	CLP SOM01.2	Three 40-milliliter amber volatile organic analyte (VOA) glass vials with Teflon™-lined cap	Hydrochloric acid to pH≤2; Store at 4±2°C	14 days
SVOCs	CLP SOM01.2	Two 1-liter amber glass bottles	Store at 4±2°C	7 days
Pesticides	CLP SOM01.2	Two 1-liter amber glass bottles	Store at 4±2°C	7 days
PCB Aroclors	CLP SOM01.2	Two 1-liter amber glass bottles	Store at 4±2°C	7 days
PCB Congeners	EPA 1668B	One 1-liter amber glass bottle	Store at 4±2°C	360 days
TSS	SM 2540 D	One 1-liter HDPE bottle	Store at 4±2°C	7 days
Investigative Soil Vapor Samples				
VOCs	TO 15	6-liter Summa canister	---	28 days
IDW Special Analysis				
Reactivity Corrosivity Ignitability	SW-846 Method 9045C or 9040B, Method 1030, and Chapter 7	One 8-ounce amber glass jar with Teflon™-lined cap	Store at ≤6°C	NA/72 hours
TCLP metals (including mercury)	SW-846 Methods1311/6010B /7470A	One 8-ounce amber glass jar with Teflon™-lined cap	Store at ≤6°C	180 days except mercury is 28 days

NOTE:

a Holding time is measured from the time of sample collection to the time of sample extraction and/or analysis.
CLP = Contract Laboratory Program
HDPE = high-density polyethylene
PCB = Polychlorinated biphenyl
SVOC = Semi-volatile organic compound
TAL = Target Analyte List
TCLP = Toxicity Characteristic Leaching Procedure
VOC = Volatile organic compound

2.4 SAMPLE HANDLING AND CUSTODY

Each sample collected by the EA field team will be traceable from the point of collection through analysis and final disposition to ensure sample integrity. Sample integrity helps to ensure the legal defensibility of the analytical data and subsequent conclusions. Sample handling will follow CLP protocols as required in EPA's Contract Laboratory Program Guidance for Field Samplers (EPA 2011) and/or SOP 004 (Appendix A), as applicable.

The EA field team will use EPA's data management system known as "SCRIBE" to generate chain-of-custody records in the field. Applicable copies of generated Scribe files will be delivered to EPA data management personnel as required by CLP protocols.

2.5 MANAGEMENT OF INVESTIGATION-DERIVED WASTE

EA will incorporate best management practices of green remediation as it relates to the management of IDW. Drill cuttings and unused portions of soil samples from the site will be returned to the applicable sampling location, boring, pile, etc., to minimize waste generation requiring off-site disposal. IDW soil samples will be submitted to an EA-subcontracted laboratory for disposal characterization. Landfill Disposal Restrictions will dictate sample quantities and analysis.

The decontamination water generated during well installation, ground water sampling, and equipment decontamination will be drummed, sealed, labeled, and stored at the designated staging area (Support Zone) until profiled for acceptance at an approved disposal facility (SOP 042, Appendix A). IDW water samples will be submitted to an EA-subcontracted laboratory for disposal characterization.

2.6 CONSENT FOR PROPERTY ACCESS

Sampling activities may be performed on privately-owned properties located within the City of Ingleside. EA will obtain consent for property access agreements from the private property owners whose properties have been identified for investigation under the RI/FS. EPA will provide draft access agreements to EA for use during this effort. EPA will assist EA if a property owner does not provide access to critical areas of the site. For properties where the property owner cannot be identified and/or the property owner is not responsive, other properties may be identified for characterization as appropriate.

2.7 ANALYTICAL METHODS

The source of analytical services to be provided will be determined in part by data quality objectives and the intended use of the resulting data as described in the QAPP (EA 2012b). EA will use EPA-approved methods for laboratory analyses of the samples. Analytical methods to be used are included in Table 4.

2.7.1 Field Analytical Methods

Water quality parameters that include total dissolved solids (TDS), pH, temperature, specific conductance, oxidation-reduction potential, dissolved oxygen, and turbidity will be monitored using field-based methods during the collection of water samples. EA will follow manufacturer-recommended procedures for operating field equipment and appropriate SOPs (Appendix A).

2.7.2 Fixed-Laboratory Analytical Methods

Fixed-laboratory analyses will be conducted by EPA Region 6, a designated EPA CLP laboratory, or a subcontracted non-CLP laboratory. Samples submitted to the analytical laboratory will be analyzed in accordance with the methods indicated in Table 4. Modifications to analytical methods that may be required to manage atypical matrices or to achieve low

quantitation limits may be required. Decisions regarding the use and type of method modifications will be made during the procurement of laboratories, as different laboratories have equipment and SOPs that generate varying quantitation limits.

2.8 QUALITY CONTROL REQUIREMENTS

Various field and laboratory QC samples and measurements will be used to verify that analytical data meet the QA objectives. Field QC samples and measurements will be collected to assess the influence of sampling activities and measurements on data quality. Similarly, laboratory QC samples will be used to assess how the laboratory's analytical program influences data quality. This section describes the QC samples that are to be analyzed during the site sampling activities for: (1) each field and laboratory environmental measurement method; and (2) each sample matrix type. The sample design matrix in Appendix B presents the frequency of QC samples to be collected at the site. This section summarizes the field QC requirements, details regarding laboratory QC requirements can be found in the QAPP (EA 2012b).

Field QC samples will be collected and analyzed to assess the quality of data that are generated by sampling activities. These samples will include laboratory QC samples collected in the field, field duplicates, field blanks, equipment rinsates, original sample (OS)/MDs, MS/MSDs, and temperature blanks. QC samples collected in the field for fixed-laboratory analysis are presented in Table 5.

Field duplicates are independent samples that are collected as close as possible, in space and time, to the original investigative sample. Field duplicates can measure the influence of sampling and field procedures on the precision of an environmental measurement. They can also provide information on the heterogeneity of a sampling location. Field duplicates will be collected at a minimum frequency of one for every 10 investigative samples, as listed in Table 5. Immediately following collection of the original samples, the field duplicates are collected using the same collection method.

Field blanks are collected to assess: (1) impact from ambient air conditions during sample collection; (2) cross-contamination during sample collection, preservation, and shipment, as well as in the laboratory; and (3) cleanliness of the sample containers and preservatives. Field blank samples consist of sample containers filled with analytically-certified, organic-free water. Field blank samples are typically collected during ground water sample collection for VOC analysis at a frequency of one field blank for each day of ground water sampling activities (specifically for VOC analysis). Field blanks may be collected for other media and analytes as dictated by site conditions during investigative sampling activities. If contaminant is present in the blank samples above the method detection limit, the result for associated field samples that contain the same contaminant will be qualified as potentially not detected if the concentration of the field sample is less than five times the concentration found in the blank.

TABLE 5 FREQUENCY OF FIELD QUALITY CONTROL SAMPLES

Field QC Sample	Frequency
Trip blank	1 per cooler containing aqueous samples for VOC analysis
Field blank	1 per day, if site conditions render this sample necessary
Field duplicate	1 per 10 samples
Equipment rinsate blank	1 per non-dedicated equipment type per day or 1 per 20 samples
OS/MD [a] (inorganics)	1 per 20 samples, or as directed by EPA
MS/MSD[a] (organics)	1 per 20 samples, or as directed by EPA
Temperature blank	1 per cooler

NOTE:

a MS, MSD, and MD analyses are technically not field QC samples; however, they generally require that the field personnel collect additional volumes of samples and are, therefore, included on this table for easy reference. The analytical laboratory will be contacted to determine sample volume requirements.

Equipment rinsate blanks are collected when nondedicated or nondisposable sampling equipment is used to collect samples and put the samples into containers. These blanks assess the cleanliness of the sampling equipment and the effectiveness of equipment decontamination. Equipment rinsate blanks are collected by pouring analyte-free water over the decontaminated surfaces of sampling equipment that contacts sampling media. Equipment rinsate blanks are collected after sampling equipment has been decontaminated, but before the equipment is reused for sampling. If non-dedicated or non-disposable equipment is used, equipment rinsate blanks will be collected in accordance with the frequency listed in Table 5.

MS/MSD samples are laboratory QC samples that are collected for organic methods and MS/MD samples for inorganic methods. For aqueous samples, MS/MSDs may require double or triple the normal sample volume, depending on analytical laboratory specifications; MS/MDs require double the normal sample volume. In the laboratory, MS/MSD and MS/MD samples are split, and the MS/MSD are spiked with known amounts of analytes. Analytical results for MS/MSD and MS/MD samples are used to measure the precision and accuracy of the laboratory's organic and inorganic analytical programs, respectively. Each of these QC samples will be collected and analyzed at a frequency of one set for every 20 investigative samples for CLP laboratories or subcontract non-CLP laboratories, or in accordance with the requirements of the EPA Region 6 laboratory.

Trip blanks are will be analyzed for aqueous VOC samples only. VOC samples are susceptible to contamination by diffusion of organic contaminants through the Teflon™-lined septum of the sample vial; therefore, a VOC trip blank will be analyzed to monitor for possible sample contamination. Also, the trip blank will screen for possible contamination of VOC samples during handling and shipment from the field to the laboratory.

Temperature blanks are containers of deionized or distilled water that are placed in each cooler shipped to the laboratory. Their purpose is to provide a container to test the temperature of the samples in the respective cooler upon receipt at the analytical laboratory.

3. FIELD IMPLEMENTATION

This section describes the field investigation activities to be performed during Phase II of the RI at the site, including the rationale for the various field activities and the number of samples to be collected. Samples will be analyzed using appropriate analytical methods for the isolation, detection, and quantification of specific target compounds and analytes.

3.1 AOC-1

AOC-1 (Figure 2) has been subdivided into two areas that include: (1) AOC-1N, the entire north section of the refinery complex, on the northeast side of the FM 2725/Bishop Road intersection, and (2) AOC1-S, south section of the refinery complex, on the southwest side of the FM 2725/Bishop Road intersection that includes a drum disposal area and an area where metal waste was discarded.

Figure 2 identifies the soil and ground water sample locations for AOC-1. The sample design matrix in Appendix B identifies the number of samples that will be taken and the analyses that will be performed.

3.2 AOC-2

Included in AOC-2 are areas of the refinery that were reported to not have been used for operations or storage. However, it was reported that west of Tank 31 within AOC-2 there were drums that had leaked. This was also a cooling tower sludge disposal area (Kleinfelder 2007). These areas were not assessed during the Phase I investigation and will be assessed during this investigation.

Figure 3 identifies the soil and ground water sample locations for AOC-2. The sample design matrix in Appendix B identifies the number of samples that will be taken and the analyses that will be performed.

3.3 AOC-3

Included in AOC-3 are: (1) wetlands immediately adjacent to the site bordered by Bay Avenue, Bishop Road, and a berm on the upstream side; (2) wetlands located between Bishop Road, Sunray Road, Bay Avenue, and residences along Thayer Avenue; and (3) wetlands between Sunray Road, residences along FM 2725, Gulf Marine Fabricators, Offshore Specialty Fabricators, and the outlet of the wetlands into the Intracoastal Waterway.

Figure 4 identifies the soil, sediment, and surface water sample locations for AOC-3. The sample design matrix in Appendix B identifies the number of samples that will be taken and the analyses that will be performed.

3.4 AOC-4

Included in AOC-4 is the current barge docking facility, which is approximately 0.5 acres and is located on the Intracoastal Waterway. The fenced facility, which is connected to the refinery by pipelines, is used to load and unload barges. It was reported that only crude oil passed through the docking facility. However, refined products historically were loaded and unloaded at this docking facility. There have been no reported releases associated with this AOC. However, Phase I analytical results, summarized below, indicate that a release has occurred, which will require further assessment of this area.

Figure 5 identifies the soil and ground water sample locations for AOC-4. The sample design matrix in Appendix B identifies the number of samples that will be taken and the analyses that will be performed.

3.5 AOC-5

Included in this AOC are the sediments and surface water adjacent to the current and former barge dock facility. During the Phase I Investigation sediment and surface water samples were collected and analyzed for metals, VOCs, SVOCs, PCBs, herbicides, and pesticides.

Figure 6 identifies the sediment and surface water sample locations for AOC-5. The sample design matrix in Appendix B identifies the number of samples that will be taken and the analyses that will be performed.

Fish samples will be removed from the intracoastal waterway if specified for sampling and analysis. Whole fish and fish fillet samples will be collected and prepared for laboratory analysis submittal. Fish tissue will be analyzed for SVOCs, metals, PCBs, and pesticides.

3.6 AOC-6

Included in this AOC is the neighborhood along Thayer Road, located across Bishop Road from the refinery. During the Phase I investigation, soil and ground water were assessed within AOC-6 for VOCs, SVOCs, metals, PCBs, herbicides and pesticides.

Figure 7 identifies the soil sample locations for AOC-6. The sample design matrix in Appendix B identifies the number of samples that will be taken and the analyses that will be performed.

3.7 AOC-7

Included in this AOC is the neighborhood along Bishop Road, located across Bishop Road from the north site. During the Phase I investigation, soil was assessed within AOC-7 for VOCs, SVOCs, metals, PCBs, herbicides and pesticides.

Figure 8 identifies the soil sample locations for AOC-7. The sample design matrix in Appendix B identifies the number of samples that will be taken and the analyses that will be performed.

3.8 BACKGROUND LOCATIONS

Figure 9 identifies the soil, sediment, surface water, and ground water sample locations for Background. The sample design matrix in Appendix B identifies the number of samples that will be taken and the analyses that will be performed.

Background reference areas will be based on media with similar characteristics to the media associated with the AOC being investigated. Additionally, the background reference areas shall have the same physical, chemical, geological, and biological characteristics as the site, but have not been affected by activities on the site. Also, background sample locations should not be established at locations directly influenced by, or in close proximity to, obvious sources (e.g., other sites, storm water and point source outfalls, bridges, and roadways, etc.)."

4. REFERENCES

EA Engineering, Science, and Technology, Inc. (EA). 2012a. *Remedial Investigation/Feasibility Study Work Plan and Cost Estimate for Falcon Refinery Superfund Site, Ingleside, San Patricio County, Texas, Revision 01*. 24 April.

EA 2012b. *Quality Assurance Project Plan, Remedial Investigation/Feasibility of Falcon Refinery Superfund Site, Ingleside, San Patricio County, Texas.* 6 November.

EA 2012c. *Health and Safety Plan, Remedial Investigation/Feasibility Study of Falcon Refinery Superfund Site, Ingleside, San Patricio County, Texas, Revision 00.* 6 November.

EA 2012d. *Site, Management Plan, Remedial Investigation/Feasibility Study of Falcon Refinery Superfund Site, Ingleside, San Patricio County, Texas, Revision 00.* 6 November.

Kleinfelder 2009. *Remedial Investigation and Feasibility Study for Falcon Refinery Superfund Site, Ingleside, Texas, Quality Assurance Project Plan Addendum.* Revision 04. 1 April.

TRC Environmental Corporation, Inc. (TRC) 2011. *Remedial Investigation/Feasibility Study Field Sampling Plan Addendum No. 1a Falcon Refinery Superfund Site, Ingleside, San Patricio County, Texas.* Revision 06. 21 March.

U.S. Environmental Protection Agency (EPA). EPA 2011. *Contract Laboratory Program Guidance for Field Samplers.* EPA 540/R-00/03. Office of Superfund Remediation and Technology Innovation (OSRTI). Washington, D.C. January.

EPA 2012. *RAC II Statement of Work for Remedial Investigation/Feasibility Study (RI/FS), Falcon Refinery Superfund Site, Ingleside, San Patricio County, Texas.* 3 February.

FIGURES

N

0 250 500

Feet

Legend:

Area of Concern Boundary

Active NORCO Pipeline

Above ground

Underground

Abandonded NORCO Pipeline

Above ground

Underground

Outside Operations

Gulf South Pipeline

Boss Pipeline

Gathering Line 2'

Plains Marketing Pipeline

Source: AOC and pipeline locations from TRC, dated, March 10, 2011

Image Source: 2009 Texas Orthoimagery Program, Texas Strategic Mapping Program, TNRIS, 2009

Falcon Refinery Superfund Site
Ingleside, San Patricio County,Texas

Figure 1
Site Map
Field Sampling Plan

2013-02-01 R:\Federal\EPA\RAC II\0088-Falcon Refinery RI\FS\GIS\MXDs\SiteMap.mxd EA-Dallas jschwertz

N

0 200 400

Feet

Legend:

- Proposed Monitoring Well Location
- Proposed Judgmental Soil Sample Location
- Area of Concern 1 Boundary

Source: AOC and pipeline locations from TRC, dated, March 10, 2011

Image Source: 2009 Texas Orthoimagery Program, Texas Strategic Mapping Program, TNRIS, 2009

Falcon Refinery Superfund Site
Ingleside, San Patricio County,Texas

Figure 2
AOC-1 Sample Locations
Field Sampling Plan

2013-02-01 R:\Federal\EPA\RAC II\0088-Falcon Refinery RI\FS\GIS\MXDs\AOC1.mxd EA-Dallas jschwertz

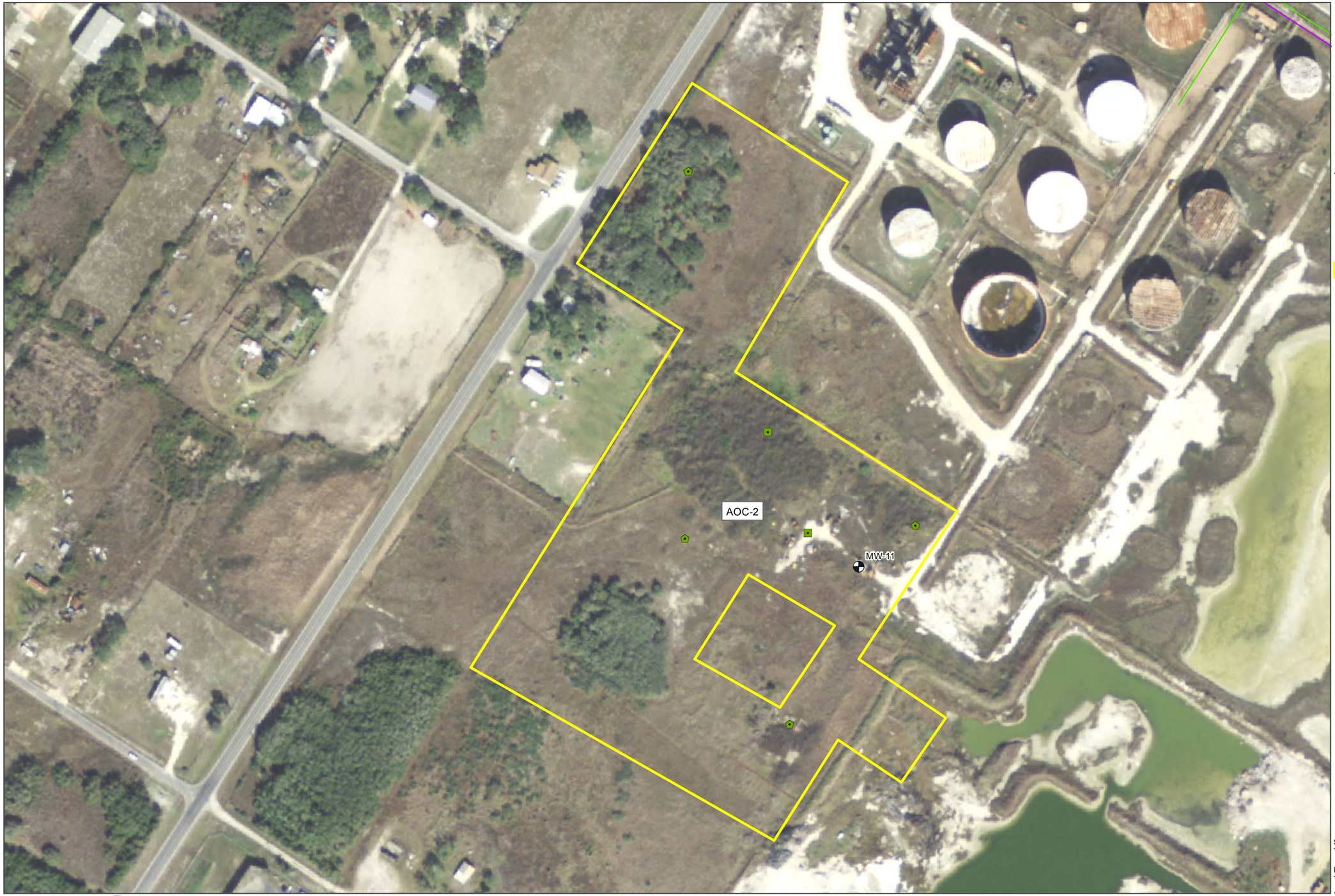

N

0 100 200

Feet

Legend:

- Proposed Monitoring Well Location
- Proposed Judgemental Soil Sample Location
- Proposed Soil Sample Location
- Area of Concern 2 Boundary

Note:
Soil boring co-located with MW-11

Source: AOC and pipeline locations from TRC, dated, March 10, 2011

Image Source: 2009 Texas Orthoimagery Program, Texas Strategic Mapping Program, TNRIS, 2009

Falcon Refinery Superfund Site
Ingleside, San Patricio County,Texas

Figure 3
AOC-2 Sample Locations
Field Sampling Plan

2012-11-06 R:\Federal\EPA\RAC II\0088-Falcon Refinery RFS\GIS\MXDs\AOC2.mxd EA-Dallas jschwertz

N

0 250 500

Feet

Legend:

- Proposed Monitoring Well Location
- Proposed Judgemental Sediment/Surface Water Sample Location
- Proposed VSP Soil Sample Location
- Proposed VSP Surface Water Sample Location
- Area of Concern 3 Boundary

Note:
VSP - Visual Sample Plan

Source: AOC and pipeline locations from TRC, dated, March 10, 2011

Image Source: 2009 Texas Orthoimagery Program, Texas Strategic Mapping Program, TNRIS, 2009

Falcon Refinery Superfund Site
Ingleside, San Patricio County,Texas

Figure 4
AOC-3 Sample Locations
Field Sampling Plan

2012-11-06 R:\Federal\EPA\RAC III\0688-Falcon Refinery RI\FS\GIS\MXDs\AOC3.mxd EA-Dallas jschwertz

N

0 50 100

Feet

Legend:

- Proposed Monitoring Well Location
- Proposed VSP Soil Sample Location
- Proposed Soil Sample Location
- Area of Concern 4 Boundary

Note:
VSP - Visual Sample Plan

Source: AOC and pipeline locations from TRC, dated, March 10, 2011

Image Source: 2009 Texas Orthoimagery Program, Texas Strategic Mapping Program, TNRIS, 2009

Falcon Refinery Superfund Site
Ingleside, San Patricio County,Texas

Figure 5
AOC-4 Sample Locations
Field Sampling Plan

2012-11-06 R:\Federal\EPA\RAC II\0088-Falcon Refinery RI\FS\GIS\MXDs\AOC4.mxd EA-Dallas jschwertz

N

0 150 300

Feet

Legend:

- Proposed Sediment/Surface Water Sample Location
- Area of Concern 5 Boundary

Source: AOC and pipeline locations from TRC, dated, March 10, 2011

Image Source: 2009 Texas Orthoimagery Program, Texas Strategic Mapping Program, TNRIS, 2009

Falcon Refinery Superfund Site
Ingleside, San Patricio County,Texas

Figure 6
AOC-5 Sample Locations
Field Sampling Plan

2013-01-30 R:\Federal\EPA\RAC II\0088-Falcon Refinery RI\FS\GIS\MXDs\AOC5.mxd EA-Dallas jschwertz

N

0 50 100

Feet

Legend:

- Proposed Judgemental Soil Sample Location
- Area of Concern 6 Boundary

Source: AOC and pipeline locations from TRC, dated, March 10, 2011

Image Source: 2009 Texas Orthoimagery Program, Texas Strategic Mapping Program, TNRIS, 2009

Falcon Refinery Superfund Site
Ingleside, San Patricio County,Texas

Figure 7
AOC-6 Sample Locations
Field Sampling Plan

2012-11-06 R:\Federal\EPA\RAC II\0088-Falcon Refinery RFS\GIS\MXDs\AOC6.mxd EA-Dallas jschwertz

N

0 50 100

Feet

Legend:

- Proposed Judgemental Soil Sample Location
- Area of Concern 7 Boundary

Source: AOC and pipeline locations from TRC, dated, March 10, 2011

Image Source: 2009 Texas Orthoimagery Program, Texas Strategic Mapping Program, TNRIS, 2009

Falcon Refinery Superfund Site
Ingleside, San Patricio County,Texas

Figure 8
AOC-7 Sample Locations
Field Sampling Plan

2012-11-06 R:\Federal\EPA\RAC II\0088-Falcon Refinery RFS\GIS\MXDs\AOC7.mxd EA-Dallas jschwertz

N

0 750 1,500

Feet

Legend:

- Proposed Soil Sample Location
- Proposed Temporary Well at Soil Sample Location
- Proposed Sediment/Surface Water Sample Location
- Areas of Concern Boundary

Source: AOC and pipeline locations from TRC, dated, March 10, 2011

Image Source: 2009 Texas Orthoimagery Program, Texas Strategic Mapping Program, TNRIS, 2009

Falcon Refinery Superfund Site
Ingleside, San Patricio County,Texas

Figure 9
Background Sample Locations
Field Sampling Plan

2012-11-06 R:\Federal\EPA\RAC II\0088-Falcon Refinery RFS\GIS\MXDs\Background.mxd EA-Dallas jschwertz

APPENDIX A

Standard Operating Procedures

Standard Operating Procedure No. 001
for
Sample Labels

Prepared by

EA Engineering, Science, and Technology, Inc.
11019 McCormick Road
Hunt Valley, Maryland 21031

Revision 0
August 2007

CONTENTS

Page

1. SCOPE AND APPLICATION 1

2. MATERIALS 1

3. PROCEDURE 1

   3.1 Label Information 1
   3.2 Routine Check 2
   3.3 Record Information 2

      3.3.1 Logbook Entry 2

   3.4 Shipment 3

4. MAINTENANCE 3

5. PRECAUTIONS 3

   5.1 Incidental Odors 3
   5.2 Duplicate Sample 3

6. REFERENCES 3

1. SCOPE AND APPLICATION

The purpose of this Standard Operating Procedure is to delineate protocols for the use of sample labels. Every sample will have a sample label uniquely identifying the sampling point and analysis parameters. An example label is provided below. Other formats with similar levels of detail are acceptable.

PROJECT NAME _____ PROJECT NUM. _____
SAMPLE LOCATION/SITE ID _____
DATE: ____/____/____ TIME: _____:_____
ANALYTES: METALS VOC EXPLOSIVES ORGANICS OTHER
FILTERED: [NO] [YES]
PRESERVATIVE: [NONE] [HNO_3] [OTHER _____]
SAMPLER: _____

2. MATERIALS

The following materials may be required: sample label and indelible laboratory marker.

3. PROCEDURE

The following sections describe how to use the sample labeling system.

3.1 LABEL INFORMATION

As each sample is collected/selected, fill out a sample label. Enter the following information on each label:

- Project name
- Project number
- Location/site identification—Enter the media type (i.e., well number, surface water, soil, etc.) sampling number, and other pertinent information concerning where the sample was taken
- Date of sample collection

- Time of sample collection
- Analyses to be performed (NOTE: Due to number of analytes, details of analysis should be arranged with laboratory *prior to start of work)*
- Whether filtered or unfiltered (water samples only)
- Preservatives (water samples only)
- Number of containers for the sample (e.g., 1 of 2, 2 of 2).

3.2 ROUTINE CHECK

Double-check the label information to make sure it is correct. Detach the label, remove the backing, and apply the label to the sample container. Cover the label with clear tape, ensuring that the tape completely encircles the container.

3.3 RECORD INFORMATION

Record the sample number and designated sampling point in the field logbook, along with the following sample information:

- Time of sample collection (each logbook page should be dated)
- Location of the sample
- Organic vapor meter or photoionization meter readings for the sample (when appropriate)
- Any unusual or pertinent observations (oily sheen on groundwater sample, incidental odors, soil color, grain size, plasticity, etc.)
- Number of containers required for each sample
- Whether the sample is a quality assurance sample (split, duplicate, or blank).

3.3.1 Logbook Entry

A typical logbook entry might look like this:

- 7:35 a.m. Sample No. MW-3. PID = 35 ppm
- Petroleum odor present. Sample designated MW-3-001.

NOTE: Duplicate samples will be given a unique sample designation rather than the actual sample number with an added prefix or suffix. This will prevent any indication to the laboratory that this is a duplicate sample. This fictitious sample number will be listed in the logbook along with the actual location of the sample.

3.4 SHIPMENT

Place the sample upright in the designated sample cooler. Make sure there is plenty of ice in the cooler at all times.

4. MAINTENANCE

Not applicable.

5. PRECAUTIONS

5.1 INCIDENTAL ODORS

Note that although incidental odors should be noted in the logbook, it is unwise from a safety and health standpoint to routinely “sniff test” samples for contaminants.

5.2 DUPLICATE SAMPLE

No indication of which samples are duplicates is to be provided to the laboratory.

6. REFERENCES

U.S. Environmental Protection Agency. 1980. Interim Guidelines and Specifications for Preparing Quality Assurance Project Plans. QAMS-005/80.

Standard Operating Procedure No. 002
for
Chain-of-Custody Form

Prepared by

EA Engineering, Science, and Technology, Inc.
11019 McCormick Road
Hunt Valley, Maryland 21031

Revision 0
August 2007

CONTENTS

Page

1. SCOPE AND APPLICATION 1

2. MATERIALS 1

3. PROCEDURE 1

4. MAINTENANCE 1

5. PRECAUTIONS 2

6. REFERENCES 2

1. SCOPE AND APPLICATION

The purpose of this Standard Operating Procedure is to delineate protocols for use of the chain-of-custody form. An example is provided as Figure SOP002-1. Other formats with similar levels of detail are acceptable.

2. MATERIALS

The following materials may be required: chain-of-custody form and indelible ink pen.

3. PROCEDURE

- Give the site name and project name/number.
- Enter the sample identification code.
- Indicate the sampling dates for all samples.
- List the sampling times (military format) for all samples.
- Indicate “grab” or “composite” sample with an “X.”
- Specify the sample location.
- Enter the total number of containers per cooler.
- List the analyses/container volume.
- Obtain the signature of sample team leader.
- State the carrier service and airbill number, analytical laboratory, and custody seal numbers.
- Sign, date, and time the “relinquished by” section.
- Upon completion of the form, retain the shipper copy, and affix the other copies to the inside of the sample cooler, in a zip-seal bag to protect from moisture, to be sent to the designated laboratory.

4. MAINTENANCE

Not applicable.

5. PRECAUTIONS

None.

6. REFERENCES

U.S. Environmental Protection Agency (U.S. EPA). 1980. Interim Guidelines and Specifications for Preparing Quality Assurance Project Plans, QAMS-005/80.

U.S. EPA. 1990. Sampler's Guide to the Contract Laboratory Program. EPA/540/P-90/006, Directive 9240.0-06, Office of Emergency and Remedial Response, Washington, D.C. December.

U.S. EPA. 1991. User's Guide to the Contract Laboratory Program. EPA/540/O-91/002, Directive 9240.0-01D, Office of Emergency and Remedial Response. January.

Company Name:				Project Manager or Contact: Phone:	Parameters/Method Numbers for Analysis															Chain of Custody Record	
Project No. Dept.: Task:				Project Name:																EA Laboratories 19 Loveton Circle Sparks, MD 21152 Telephone: (410) 771-4950 Fax: (410) 771-4077	
Sample Storage Location:				ATO Number:																**Report Deliverables:** **1 2 3 4 D E** **EDD: Yes/No** **DUE TO CLIENT: _____**	
Page of				**Report #:**																	
Date	Time	Water	Soil	Sample Identification 19 Characters	**No. of Containers**															**EA Labs Accession Number**	Remarks
																					LPM:

Samples by: (Signature)	Date/Time	Relinquished by: (Signature)	Date/Time	Received by: (Signature)	Date/Time
Relinquished by: (Signature)	Date/Time	Received by Laboratory: (Signature)	Date/Time	Airbill Number:	Sample Shipped by: (Circle) Fed Ex. Puro. UPS Hand Carried Other:

Cooler Temp. _____C pH: ___ Yes ___ No Comments: Custody Seals Intact ___ Yes ___ No

NOTE: Please indicate method number for analyses requested. This will help clarify any questions with laboratory techniques.

Standard Operating Procedure No. 003
for
Subsurface/Utility Clearance

Prepared by

EA Engineering, Science, and Technology, Inc.
11019 McCormick Road
Hunt Valley, Maryland 21031

Revision 0
August 2007

CONTENTS

Page

1. SCOPE AND APPLICATION 1

   1.1 Purpose 1
   1.2 Limitations 1
   1.3 Scope 1

2. PROCEDURES 2

   2.1 Safety 2
   2.2 Preparation Tasks 2

      2.2.1 Obtain Permits and Site Access 2
      2.2.2 Historic Site Information 2
      2.2.3 Mark-Outs 3
      2.2.4 Initial Site Visit 4
      2.2.5 Utilities 4
      2.2.6 Other Subsurface Systems 5
      2.2.7 Selection of Ground Disturbance Locations 5
      2.2.8 Review of Selected Locations with the Client 5
      2.2.9 Ground Disturbance Activity Sequence 5

3. SUBSURFACE CLEARANCE METHODS 6

   3.1 Subsurface Clearance Procedures for Drilling, Direct-Push Technology, Augering, Fence Post Installation, or Other Borehole Installation Activities 6

   3.2 Subsurface Clearance Procedures for Trenching/Excavation Activities 7

APPENDIX A: SUBSURFACE CLEARANCE PROCEDURE CHECKLIST
APPENDIX B: UNIFORM COLOR CODES FOR MARKING OF UNDERGROUND FACILITIES

1. SCOPE AND APPLICATION

1.1 PURPOSE

The purpose of this Standard Operating Procedure is to prevent injury to workers and damage to subsurface structures (including tanks, pipe lines, water lines, gas lines, electrical service, etc.) during ground disturbance activities (including drilling, augering, sampling, use of direct-push technologies, excavation, trenching, concrete coring or removal, fence post installation, grading, or other similar operations).

1.2 LIMITATIONS

The procedures set forth in this document are the suggested procedures but may not be applicable to particular sites based on the site-specific considerations. The Project Manager is responsible for making a site-specific evaluation of each site to determine whether the Subsurface/Clearance Procedures should be utilized or require modification. If safety or other site-specific considerations require a modified or different procedure, the Project Manager should review the modified procedure with the Business Unit Director, Profit Center Manager, or Senior Technical Reviewer.

1.3 SCOPE

This procedure provides minimum guidance for subsurface clearance activities, which must be followed prior to and during ground disturbance activities at EA project sites. Even after completing the subsurface clearance activities required in this procedure, all ground disturbance activities should proceed with due caution.

Deviations from this procedure may be provided on an exception basis for specific situations, such as underground storage tank systems removals, verified aboveground/overhead services/lines, undeveloped land/idle facilities, shallow groundwater conditions, soil stability, or well construction quality assurance/quality control concerns, etc.

EA or its subcontractors are responsible for, and shall ensure that, all ground disturbance activities are completed safely, without incident, and in accordance with applicable federal, state, and local regulations.

This procedure shall not override any site-specific or consultant/contractor procedures that are more stringent or provide a greater degree of safety or protection of health or the environment.

2. PROCEDURES

The EA Project Manager or his designee must complete the Subsurface Clearance Procedure Checklist (Appendix A) in conjunction with the following procedures. The checklist must be completed before initiating any ground disturbance activities. The completed checklist must be submitted to the appropriate team individuals, subcontractors, and/or the client and included in the project files.

2.1 SAFETY

A Health and Safety Plan must be available onsite and followed by all contractors and subcontractors.

All work areas shall be defined and secured with safety cones, safety tape, construction fence, other barriers, or signs as appropriate.

Site work permits must be obtained as required by site procedures. Based on site conditions or classification, the use of intrinsically-safe equipment may be required.

To ensure the safety of all onsite personnel and subsurface structure integrity, consideration should be given to de-energizing and locking out selected site utilities or temporarily shutting down a portion of or the entire facility.

2.2 PREPARATION TASKS

Objective—To gather all relevant information about potential subsurface structures prior to the actual site visit.

2.2.1 Obtain Permits and Site Access

The consultant/contractor is responsible for following all applicable laws, guidance, and approved codes of practice; obtaining all necessary permits and utility clearances; and securing site access permission.

2.2.2 Historic Site Information

Obtain most recent as-built drawings and/or site plans (including underground storage tank, product, and vent lines) as available.

NOTE: As-built drawings may not accurately depict the locations and depths of improvements and subsurface structures and should, therefore, not be **solely** relied upon.

EA should obtain any other site information such as easements, right-of-ways, historical plot plans, fire insurance plans, tank (dip) charts, previous site investigations, soil surveys, boring logs, and aerial photographs, etc. as relevant to the planned ground disturbance activities.

Where applicable, EA should also contact contract personnel who may have historic site knowledge.

2.2.3 Mark-Outs

Objective—To identify location of subsurface structures on surface.

EA must ensure that a thorough mark-out at the site is completed to locate electrical, gas, telephone, water, sewer, low voltage electric lines, product delivery pipelines, fiber optic, and all other subsurface utilities/services.

- Where available, public utility companies must be contacted to identify underground utilities. (This can be accomplished through the One-Call system in most instances.)

- In addition, where available and warranted by site conditions, a private utility/pipeline mark-out company should be contracted to perform an electronic subsurface survey to identify the presence of suspected hazardous or critical underground utilities and subsurface structures. In some cases, this is necessary to confirm public utility mark-outs in the vicinity of planned ground disturbance activities.

EA will review all available site plan subsurface information with the private mark-out company to assist in locating utilities and other subsurface structures.

NOTE: Mark-outs may not accurately depict the exact locations of improvements and subsurface structures and should, therefore, not be **solely** relied upon.

Where possible, EA personnel are encouraged to be onsite at the time of subsurface mark-outs. This is to ensure accuracy and understanding of subsurface structures identified and provides an opportunity to exchange information with mark-out company personnel regarding planned work activities.

Subsurface structures should be marked throughout the entire work area(s) with adequate materials (e.g., site conditions may require paint and tape/flags). Ground disturbance activities must be started within 30 days of mark-out, unless local ordinances specify a shorter time period. If activities are not started within required time period or markings have faded, mark-outs must be redone.

EA personnel will record time and date of mark-out request and list all companies contacted by the service and confirmation number. This should be available for review onsite and checked off after visual confirmation of markings.

2.2.4 Initial Site Visit

Objective—To compare the site plan to actual conditions based on information gathered in Procedures 2 and 3 above, obtain additional site information needed, and prepare a vicinity map.

EA will document all findings and update the site plan with this information. On third party sites, close coordination with the site owner's representatives for mark-outs, review of as-builts, and other information reviews should be conducted prior to work. Project Managers are encouraged to provide updated as-built information to the client.

In some regions, it may be more effective and efficient to conduct the site visit at the same time the contractor and drill rig are mobilized to the site. The inspection should include the following activities and may include others as determined by the consultant/contractor and the Project Manager.

2.2.5 Utilities

EA shall perform a detailed site walk-through for the purpose of identifying all aboveground indicators of subsurface utilities/services that may be leading to or from buildings within the planned work area. The inspection shall include, but not be limited to, the following:

- Utility mark-outs
- Aboveground utilities
- Area lights/signs
- Phones
- Drains
- Junction boxes
- Natural gas meters or connections
- Other utilities including: fire hydrants, on/below grade electrical transformers, splice cages, sewer lines, pipeline markers, cable markers, valve box covers, clean-outs/traps, sprinkler systems, steam lines (including insulated tanks that may indicate steam lines), and cathodic protection on lines/tanks
- Observe paving scars (i.e., fresh asphalt/concrete patches, scored asphalt/concrete).

NOTE: In many cases, the onsite location of low-voltage electrical lines and individual property water and sewer line branches may be approximated by using the following technique:

- Locate the entry/connection location at the facility building
- Attempt to identify utility connections for the mains (water sewer, etc.) by locating clean-outs, valve manways, etc. The location path of the utility is likely with the area between the main connection and facility building connection. Subsurface electrical line locations from the facility building to signs, lamps, etc. can be estimated with the same process.

2.2.6 Other Subsurface Systems

Some other subsurface systems to be cognizant of during subsurface activities include product delivery systems (i.e., at gas stations) and existing remediation systems.

2.2.7 Selection of Ground Disturbance Locations

EA will utilize the information collected to this point in combination with regulatory requirements and project objectives to select ground disturbance locations. Ground disturbance locations should also consider the location of overhead obstructions (e.g., power lines). Work at active gasoline retail locations must consider several special considerations that should be outlined in the site-specific safety and health plan.

2.2.8 Review of Selected Locations with the Client

EA will review the selected ground disturbance locations with the client. EA will not proceed with the subsurface activities until the plan has been discussed with the client. During execution of the project, subsurface activities are required outside of the area previously approved by the client. EA will submit these changes to the client for approval prior to execution.

2.2.9 Ground Disturbance Activity Sequence

EA will plan ground disturbance activities starting at the point farthest from the location of suspected underground improvements. This is done to determine the natural subsurface conditions and to allow EA site personnel to recognize fill conditions.

Experience has shown that the following warning signs may indicate the presence of a subsurface structure:

- Warning tape (typically indicative of underground services).
- Pea gravel/sand/non-indigenous material (typically indicative of tanks or lines).
- Red concrete (typically indicative of electrical duct banks).

- The abrupt absence of soil recovery in a hand auger. This could indicate pea gravel or sand that has spilled out of the auger. This may not be indicative in areas where native soil conditions typically result in poor hand auger recoveries.

- Any unexpected departure from the native soil or backfill conditions as established by prior onsite digging.

If any of these conditions is encountered by EA site personnel, digging should stop and the client should be contacted.

3. SUBSURFACE CLEARANCE METHODS

The method used to delineate the subsurface should be compatible with the inherent associated risk given the type of facility/property, soil stratigraphy, and the location of the ground disturbance activity, such that required delineation is obtained. It should be noted that in areas where there is paving, sufficient paving should be removed to allow clear visibility of the subsurface conditions during clearance activities. The following is a list of potential clearance methods that may be used on a job site:

- Vacuum digging
- Probing
- Hand digging
- Hand augering
- Post-hole digging.

EA personnel will evaluate the potential for electrical shock or fire/explosion for each subsurface disturbance project and will evaluate as necessary the use of non-conductive or non-sparking tools (i.e., fiberglass hand shovels, and thick electrically insulating rubber grips on hand augers or probes). The potential need for the use of non-conductive materials, electrical safety insulated gloves, and footwear will also be evaluated on a case-by-case basis.

3.1 SUBSURFACE CLEARANCE PROCEDURES FOR DRILLING, DIRECT-PUSH TECHNOLGY, AUGERING, FENCE POST INSTALLATION, OR OTHER BOREHOLE INSTALLATION ACTIVITIES

The area to be delineated will exceed the diameter of the largest tool to be advanced and sufficiently allow for visual inspection of any obstructions encountered.

3.2 SUBSURFACE CLEARANCE PROCEDURES FOR TRENCHING/ EXCAVATION ACTIVITIES

Appropriate subsurface clearance methods should be conducted along the length and width of the excavation at a frequency sufficient to ensure adequate precautions have been applied to the entire work area. The frequency and density of investigations will be based on site knowledge, potential hazards, and risks of the work area to surrounding locations (e.g., proximity to a residential area or school).

Whenever subsurface structures are exposed, EA will cease work and mark the area (e.g., flags, stakes, cross bracing) to ensure the integrity of these exposed structures is maintained during subsequent trenching/excavation/backfilling.

Uniform color codes for marking of underground facilities are provided in Appendix B.

Appendix A

Subsurface Clearance Procedure Checklist

Subsurface Clearance Procedure Checklist

Site Identification: _____

Project Consultant/Contractor: _____

Section 1: Safety, Preparation Tasks, and Mark-Outs

Activity	Yes	No	N/A	Comments including Justification if Response Is No or Not Applicable
Health and Safety Plan is available and all contractors and subcontractors are familiar with it.				
All applicable local, state, and federal permits have been obtained.				
Site access/permission has been secured.				
Most recent as-built drawings and/or site plans (including underground storage tank, product, and vent lines) obtained.				
Reviewed site information to identify subsurface structures relevant to planned site activities (easements, rights-of-way, historical plot plans, fire insurance plans, tank dip charts, previous site investigations, soil surveys, boring logs, aerial photographs, etc.).				
Utility mark-outs have been performed by public utility company(s). Mark-outs clear/visible.				
Subsurface structure mark-outs performed by private mark-out company. Mark-outs clear/visible.				
Additional Activities: Were dig locations reviewed with site representative?				

Section 2: Initial Site Visit and Selecting Ground Disturbance Locations

Activity	Yes	No	N/A	Comments including Justification if Response Is No or Not Applicable
Location of all aboveground indicators of subsurface utilities/services that may be leading to or from buildings within the planned work area has been identified.				
Location of utility mark-outs by all utility companies previously contacted has been identified within required time period.				
Location of all subsurface structure mark-outs by private mark-out company has been identified within required time period.				
Location of area lights/signs and associated subsurface lines identified.				
Location of all phones and associated subsurface lines identified.				
Location of all drains and associated interconnecting lines identified.				
Location of all electrical junction boxes and associated interconnecting lines identified				
Location of all natural gas meters or connections and all interconnecting lines identified				

Completed by: _____
Name

Signature: _____ _____
Company Date

Appendix B

Uniform Color Codes for Excavation

APWA UNIFORM COLOR CODE

WHITE - Proposed Excavation

PINK - Temporary Survey Markings

RED - Electric Power Lines, Cables, Conduit and Lighting Cables

YELLOW - Gas, Oil, Steam, Petroleum or Gaseous Materials

ORANGE - Communication, Alarm or Signal Lines, Cables or Conduit

BLUE - Potable Water

PURPLE - Reclaimed Water, Irrigation and Slurry Lines

GREEN - Sewers and Drain Lines

TYPICAL MARKING

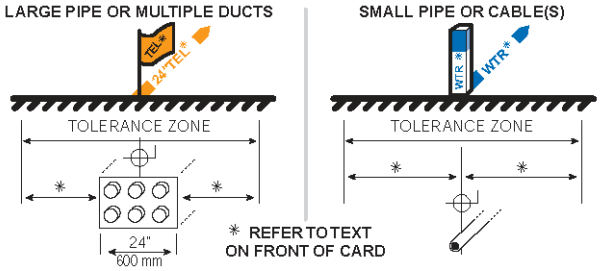

Customize with your center's phone and address information

GUIDELINES FOR UNIFORM TEMPORARY MARKING OF UNDERGROUND FACILITIES

This marking guide provides for universal use and understanding of the temporary marking of subsurface facilities to prevent accidents and damage or service interruption by contractors, excavators, utility companies, municipalities or any others working on or near underground facilities.

ONE-CALL SYSTEMS
The One-Call damage prevention system shall be contacted prior to excavation.

PROPOSED EXCAVATION
Use white marks to show the location, route or boundary of proposed excavation. Surface marks on roadways do not exceed 1.5" by 18" (40 mm by 450 mm). The facility color and facility owner identity may be added to white flags or stakes.

USE OF TEMPORARY MARKING
Use color-coded surface marks (i.e., paint or chalk) to indicate the location or route of active and out-of-service buried lines. To increase visibility, color coded vertical markers (i.e., stakes or flags) should supplement surface marks. Marks and markers indicate the name, initials or logo of the company that owns or operates the line, and width of the facility if it is greater than 2" (50 mm). Marks placed by other than line owner/operator or its agent indicate the identity of the designating firm. Multiple lines in joint trench are marked in tandem. If the surface over the buried line is to be removed, supplementary offset markings are used. Offset markings are on a uniform alignment and clearly indicate the actual facility is a specific distance away.

TOLERANCE ZONE
Any excavation within the tolerance zone is performed with non-powered hand tools or non-invasive method until the marked facility is exposed. The width of the tolerance zone may be specified in law or code. If not, a tolerance zone including the width of the facility plus 18" (450 mm) measured horizontally from each side of the facility is recommended.

ADOPT UNIFORM COLOR CODE
The American Public Works Association encourages public agencies, utilities, contractors, other associations, manufacturers and all others involved in excavation to adopt the APWA Uniform Color Code, using ANSI standard Z535.1 Safety Colors for temporary marking and facility identification.

Rev. 4/99

Standard Operating Procedure No. 004
for
Sample Packing and Shipping

Prepared by

EA Engineering, Science, and Technology, Inc.
11019 McCormick Road
Hunt Valley, Maryland 21031

Revision 0
August 2007

CONTENTS

Page

1. SCOPE AND APPLICATION 1

2. MATERIALS 1

3. PROCEDURE 1

4. MAINTENANCE 2

5. PRECAUTIONS 2

6. REFERENCES 2

1. SCOPE AND APPLICATION

The purpose of this Standard Operating Procedure (SOP) is to delineate protocols for the packing and shipping of samples to the laboratory for analysis.

2. MATERIALS

The following materials may be required:

Clear tape	Plastic garbage bags
Custody seals	Sample documentation
Ice	Waterproof coolers (hard plastic or metal)
Metal cans with friction-seal lids (e.g., paint cans)	Zip-seal plastic bags
Packing material[1]	

3. PROCEDURE

Check cap tightness and verify that clear tape covers label and encircles container. Wrap sample container in bubble wrap or closed cell foam sheets. Enclose each sample in a clear zip-seal plastic bag.

Place several layers of bubble wrap, or at least 1 in. of vermiculite on the bottom of the cooler. Line cooler with open garbage bag, place all the samples upright inside a garbage bag, and tie the bag.

Double bag and seal loose ice to prevent melting ice from soaking the packing material. Place the ice outside the garbage bags containing the samples.

Pack shipping containers with packing material (closed-cell foam, vermiculite, or bubble wrap). Place this packing material around the sample bottles or metal cans to avoid breakage during shipment.

Enclose all sample documentation (i.e., Field Parameter Forms, chain-of-custodies) in a waterproof plastic bag and tape the bag to the underside of the cooler lid. If more than one cooler is being used, each cooler will have its own documentation.

Seal the coolers with signed and dated custody seals so that if the cooler were opened, the custody seal would be broken. Place clear tape over the custody seal to prevent damage to the seal.

1. Permissible packing materials are: (a) (non-absorbent) bubble wrap or closed cell foam packing sheets, or (b) (absorbent) vermiculite. Organic materials such as paper, wood shavings (excelsior), and cornstarch packing “peanuts” will not be used.

Refer to SOP Nos. 001, 002, 016, and 039.

Tape the cooler shut with packing tape over the hinges and place tape over the cooler drain. Ship all samples via overnight delivery on the same day they are collected if possible.

4. MAINTENANCE

Not applicable.

5. PRECAUTIONS

Any samples suspected to be of medium/high contaminant concentration or containing dioxin must be enclosed in a metal can with a clipped or sealable lid (e.g., similar to a paint can). Label the outer metal container with the sample number of the sample inside.

6. REFERENCES

U.S. Environmental Protection Agency (U.S. EPA). 1980. Interim Guidelines and Specifications for Preparing Quality Assurance Project Plans, QAMS-005/80.

U.S. EPA. 1990. Sampler's Guide to the Contract Laboratory Program. EPA/540/P-90/006, Directive 9240.0-06, Office of Emergency and Remedial Response, Washington, D.C. December.

U.S. EPA. 1991. User's Guide to the Contract Laboratory Program. EPA/540/O-91/002, Directive 9240.0-01D, Office of Emergency and Remedial Response. January.

Standard Operating Procedure No. 005
for
Field Decontamination

Prepared by

EA Engineering, Science, and Technology, Inc.
11019 McCormick Road
Hunt Valley, Maryland 21031

Revision 0
August 2007

CONTENTS

Page

1. SCOPE AND APPLICATION 1

2. MATERIALS 1

3. PROCEDURE 1

3.1 Sample Bottles 1
3.2 Personnel Decontamination 1
3.3 Equipment Decontamination 2

3.3.1 Water Samplers 2

3.3.1.1 Bailers 2
3.3.1.2 Pumps 2
3.3.1.3 Dip Samplers 3
3.3.1.4 Labware 3
3.3.1.5 Water Level Indicators 3

3.3.2 Solid Materials Samplers 3
3.3.3 Other Sampling and Measurement Probes 4
3.3.4 Drilling Rigs 5
3.3.5 High Performance Liquid Chromatography-Grade Water Storage 5
3.3.6 Ice Chests and Reusable Shipping Containers 6

4. MAINTENANCE 6

5. PRECAUTIONS 6

6. REFERENCES 7

1. SCOPE AND APPLICATION

All personnel or equipment involved in intrusive sampling, or which enter a hazardous waste site during intrusive sampling, must be thoroughly decontaminated prior to leaving the site to minimize the spread of contamination and prevent adverse health effects. This Standard Operating Procedure describes the normal decontamination of sampling equipment and site personnel.

2. MATERIALS

The following materials may be required:

0.01N HCl	Non-phosphate laboratory detergent (liquinox)
0.10N nitric acid	Plastic garbage bags
Aluminum foil or clean plastic sheeting	Plastic sheeting, buckets, etc. to collect wash water and rinsates
Approved water	Pressure sprayer, rinse bottles, brushes
High performance liquid chromatography (HPLC)-grade water[1]	Reagent grade alcohol[2]

3. PROCEDURE

3.1 SAMPLE BOTTLES

At the completion of each sampling activity, the exterior surfaces of the sample bottles must be decontaminated as follows:

- Ensure the bottle lids are on tight.
- Wipe the outside of the bottle with a paper towel to remove gross contamination.

3.2 PERSONNEL DECONTAMINATION

Review the project Health and Safety Plan for the appropriate decontamination procedures.

1. For the purposes of this Standard Operating Procedure, HPLC-grade water is considered equivalent to "deionized ultra filtered water," "reagent-grade distilled water," and "deionized organic-free water." The end product being water which is pure with no spurious ions or organics to contaminate the sample. The method of generation is left to the individual contractor.
2. For the purposes of this Standard Operating Procedure, the term "reagent grade alcohol" refers to either pesticide grade isopropanol or reagent grade methanol.

3.3 EQUIPMENT DECONTAMINATION

3.3.1 Water Samplers

3.3.1.1 Bailers

After each use, polytetrafluoroethelyne (PTFE) double check valve bailers used for groundwater sampling will be decontaminated as follows:

- Discard all ropes used in sampling in properly marked sealable container, or as directed by the Health and Safety Plan. NOTE: No tubing is to be used in conjunction with a bailer in collecting samples.
- Scrub the bailer to remove gross (visible) contamination, using appropriate brush(es), approved water, and non-phosphate detergent.
- Rinse off detergent three times with approved water.
- Rinse bailer with reagent grade alcohol.
- Rinse bailer three times with HPLC-grade water.
- Rinse bailer with 0.10N nitric acid solution.
- Rinse bailer three times with HPLC-grade water.
- Allow bailer to air dry.[3]
- Wrap bailer in aluminum foil or clean plastic sheeting, or store in a clean, dedicated polyvinyl chloride or PTFE storage container.
- Dispose of used decontamination solutions with drummed purge water.
- Rinse bailer with HPLC-grade water immediately prior to re-use.

3.3.1.2 Pumps

Submersible pumps will be decontaminated as follows:

3. If the bailer has just been used for purging and is being decontaminated prior to sampling, do not air dry. Double rinse with HPLC-grade water and proceed to collect samples.

- Scrub the exterior of the pump to remove gross (visible) contamination, using appropriate brush(es), approved water, and non-phosphate detergent. (Steam cleaning may be substituted for detergent scrub.)

- Calculate the volume of pump plus any tubing which is not disposable and not dedicated to a single well. Pump three volumes of non-phosphate laboratory detergent solution to purge and clean the interior of the pump.

- Rinse by pumping no less than nine volumes of approved water to rinse.

- Rinse pump exterior with reagent grade alcohol.

- Rinse pump exterior with HPLC-grade water.

- Allow pump to air dry.

- Wrap pump in aluminum foil or clean plastic sheeting, or store in a clean, dedicated polyvinyl chloride or PTFE storage container.

- Prior to reusing pump rinse exterior again with HPLC-grade water. (Double rinse in Bullet 5 above may be substituted for this step).

3.3.1.3 Dip Samplers

All dip samplers, whether bucket, long-handled, or short-handled, will be decontaminated in the same manner as provided in Section 3.3.1.1.

3.3.1.4 Labware

Labware, such as beakers, which are used to hold samples for field measurements, water chemistry, etc. will be decontaminated according to the procedures in Section 3.3.1.1.

3.3.1.5 Water Level Indicators

Electric water level indicators, weighted measuring tapes, or piezometers used in the determination of water levels, well depths, and/or non-aqueous phase liquid levels will be decontaminated in accordance with Section 3.3.1.1. Clean laboratory wipes may be substituted for brushes. Tapes, probes, and piezometers should be wiped dry with clean laboratory wipes, and coiled on spools or clean plastic sheeting rather than allowed to air dry.

3.3.2 Solid Materials Samplers

Solid materials samplers include soil sampling probes, augers, trowels, shovels, sludge samplers, and sediment samplers, which will be decontaminated as follows:

- Scrub the sampler to remove gross (visible) contamination, using appropriate brush(es), approved water, and non-phosphate laboratory detergent.
- Rinse off detergent with approved water.
- Rinse sampler with reagent grade alcohol.
- Rinse sampler with HPLC-grade water.
- For non-metallic samplers only, rinse sampler with 0.10N nitric acid solution.
- For non-metallic samplers only, rinse sampler with HPLC-grade water.
- Allow sampler to air dry.
- Wrap sampler in aluminum foil clean plastic sheeting, or store in a new zipseal bag (size permitting) or clean, dedicated polyvinyl chloride or PTFE storage container.
- Dispose used decontamination solutions properly according to the site-specific Health and Safety Plan.
- Rinse sampler with HPLC-grade water immediately prior to re-use.

3.3.3 Other Sampling and Measurement Probes

Soil gas sampling probes will be decontaminated as solids sampling devices.

Temperature, pH, conductivity, redox, and dissolved oxygen probes will be decontaminated according to manufacturer's specifications. If no such specifications exist, remove gross contaminant and triple rinse probe with HPLC-grade water. A summary of the decontamination procedures to be used must be included in the instrument-specific standard operating procedure.

Measuring tapes that become contaminated through contact with soil during field use will be decontaminated as follows:

- Wipe tape with a clean cloth or laboratory wipe that has been soaked with non-phosphate laboratory detergent solution to remove gross contamination. Rinse cloth in the solution and continue wiping until tape is clean.
- Wipe tape with a second clean, wet cloth (or laboratory wipe) to remove soap residues.
- Dry tape with a third cloth (or laboratory wipe) and rewind into case, or re-coil tape.

3.3.4 Drilling Rigs and Other Heavy Equipment

All drilling rigs and associated equipment such as augers, drill casing, rods, samplers, tools, recirculation tank, and water tank (inside and out) will be decontaminated prior to site entry after over-the-road mobilization and immediately upon departure from a site after drilling a hole. Supplementary cleaning will be performed prior to site entry when there is a likelihood that contamination has accumulated on tires and as spatter or dust enroute from one site to the next.

- Place contaminated equipment in an enclosure designed to contain all decontamination residues (water, sludge, etc.).
- Steam clean equipment until all dirt, mud, grease, asphaltic, bituminous, or other encrusting coating materials (with the exception of manufacturer-applied paint) have been removed.
- Water used will be taken from an approved source.
- Containerize in 55-gal drums; sample; characterize; and, based on sample results, dispose of all decontamination residues properly.

Other heavy equipment includes use of backhoes, excavators, skid steers, etc. If heavy equipment is utilized during field activities, i.e., a backhoe for test pitting, the bucket should not come in contact with soil to be sampled. If the bucket contacts the soil to be sampled, then it should be decontaminated between sample locations, following the same procedures as listed above for a drill rig.

3.3.5 High Performance Liquid Chromatography-Grade Water Storage

Dedicated glass storage containers will be used solely for dispensing HPLC-grade water. New HPLC-grade water containers will be decontaminated as follows:

- Clean with tap water from approved source and non-phosphate laboratory detergent while scrubbing the exterior and interior of the container with a stiff-bristled brush.
- Rinse thoroughly with approved water.
- Rinse with 0.01N nitric acid.
- Rinse with approved water.
- Rinse thoroughly with HPLC-grade water.
- Fill clean container with HPLC-grade water. Cap with one layer of PTFE-lined paper and one layer of aluminum foil. Secure cap with rubber band and date the container.

Used HPLC-grade water containers will be decontaminated as follows:

- Clean the exterior with tap water from an approved source, non-phosphate laboratory detergent, and a stiff-bristled brush.
- Rinse the exterior thoroughly with HPLC-grade water.
- Rinse the interior twice with pesticide-grade isopropanol.
- Rinse interior thoroughly with HPLC-grade water.
- Fill clean container with HPLC-grade water. Cap with one layer of PTFE-lined paper and one layer of aluminum foil. Secure cap with rubber band and date the container.

3.3.6 Ice Chests and Reusable Shipping Containers

- Scrub exterior/interior with approved brush and liquinox detergent.
- Rinse off detergent three times with approved water.
- Let air dry and properly store until re-use.

NOTE: If container/ice chest is severely contaminated, clean as thoroughly as possible, render unusable, and properly dispose.

4. MAINTENANCE

HPLC-grade water will be stored only in decontaminated glass containers with aluminum foil lids as stipulated above. The water may not be stored for more than nor used more than 3 days after manufacture.

HPLC-grade water will be manufactured onsite. An approved tap water source will be used as the influent to the system. Procedures for system setup, operation, and maintenance will conform to manufacturer's specifications.

5. PRECAUTIONS

Dispose of all wash water, rinse water, rinsates, and other sampling wastes (tubing, plastic sheeting, etc.) in properly marked, sealable containers, or as directed by the Health and Safety Plan.

Once a piece of equipment has been decontaminated, be careful to keep it in such condition until needed.

Do not eat, smoke, or drink onsite.

6. REFERENCES

Site-specific Health and Safety Plan.

Standard Operating Procedure No. 006
for
Summa Canister Sampling

Prepared by

EA Engineering, Science, and Technology, Inc.
11019 McCormick Road
Hunt Valley, Maryland 21031

Revision 0
August 2007

CONTENTS

Page

1. SCOPE AND APPLICATION 1

2. METHOD SUMMARY 2

3. SAMPLE PRESERVATION, CONTAINERS, HANDLING, AND STORAGE 2

4. INTERFERENCES AND POTENTIAL PROBLEMS 2

5. EQUIPMENT/APPARATUS 2

   5.1 Subatmospheric Pressure Sampling Equipment 3
   5.2 Pressurized Sampling Equipment 3

6. REAGENTS 4

7. PROCEDURE 4

   7.1 Subatmospheric Pressure Sampling 4

      7.1.1 Sampling Using a Fixed Orifice, Capillary, or Adjustable Micrometering Valve 4
      7.1.2 Sampling Using a Mass Flow Controller, Vacuum Pump Arrangement (Andersen Sampler Model 87-100) 4

   7.2 Pressurized Sampling 5

      7.2.1 Sampling Using a Mass Flow Controller, Vacuum Pump Arrangement (Andersen Sampler Model 87-100) 5

8. CALCULATIONS 5

9. QUALITY ASSURANCE/QUALITY CONTROL 6

10. DATA VALIDATION 7

11. SAFETY AND HEALTH 7

12. REFERENCES 7

APPENDIX A: EQUIPMENT/APPARATUS
APPENDIX B: SUMMA AIR SAMPLING WORK SHEET

1. SCOPE AND APPLICATION

The purpose of this Standard Operating Procedure is to describe a procedure for the sampling of volatile organic compounds (VOCs) in ambient air. The method is based on samples collected as whole air samples in Summa-passivated stainless steel canisters. The VOCs are subsequently separated by gas chromatography and measured by mass-selective detector or multidetector techniques. This method presents procedures for sampling into canisters at final pressures both above and below atmospheric pressure (respectively referred to as pressurized and subatmospheric pressure sampling). This method is applicable to specific VOCs that have been tested and determined to be stable when stored in pressurized and subatmospheric pressure canisters. The organic compounds that have been successfully collected in pressurized canisters by this method are listed in the VOC Data Sheet below:

COMPOUND (SYNONYM)	FORMULA	MOLECULAR WEIGHT	BOILING POINT (°C)	MELTING POINT (°C)	CAS NUMBER
Freon 12 (Dichlorodifluoromethane)	Cl_2CF_2	120.91	-29.8	-158.0	
Methyl chloride (Chloromethane)	CH_3Cl	50.49	-24.2	-97.1	74-87-3
Freon 114 (1,2-Dichloro-1,1,2,2-tetrafluoroethane)	$ClCF_2CClF_2$	170.93	4.1	-94.0	
Vinyl chloride (Chloroethylene)	$CH_2{=}CHCl$	62.50	-13.4	-1538.0	75-01-4
Methyl bromide (Bromomethane)	CH_3Br	94.94	3.6	-93.6	74-83-9
Ethyl chloride (Chloroethane)	CH_3CH_2Cl	64.52	12.3	-136.4	75-00-3
Freon 11 (Trichlorofluoromethane)	CCl_3F	137.38	23.7	-111.0	
Vinylidene chloride (1,1-Dichloroethene)	$C_2H_2Cl_2$	96.95	31.7	-122.5	75-35-4
Dichloromethane (Methylene chloride)	CH_2Cl_2	84.94	39.8	-95.1	75-09-2
Freon 113 (1,1,2-Trichloro-1,2,2-trifluoroethane)	CF_2ClCCl_2F	187.38	47.7	-36.4	
1,1-Dichloroethane (Ethylidene chloride)	CH_3CHCl_2	98.96	57.3	-97.0	74-34-3
cis-1,2-Dichloroethylene	$CHCl{=}CHCl$	96.94	60.3	-80.5	
Chloroform (Trichloromethane)	$CHCl_3$	119.38	61.7	-63.5	67-66-3
1,2-Dichloroethane (Ethylene dichloride)	$ClCH_2CH_2Cl$	98.96	83.5	-35.3	107-06-2
Methyl chloroform (1,1,1-Trichloroethane)	CH_3CCl_3	133.41	74.1	-30.4	71-55-6
Benzene (Cyclohexatriene)	C_6H_6	78.12	80.1	5.5	71-43-2
Carbon tetrachloride (Tetrachloromethane)	CCl_4	153.82	76.5	-23.0	56-23-5
1,2-Dichloropropane (Propylene dichloride)	$CH_3CHClCH_2Cl$	112.99	96.4	-100.4	78-87-5
Trichloroethylene (Trichloroethene)	$ClCH{=}CCl_2$	131.29	87	-73.0	79-01-6
cis-1,3-Dichloropropene (cis-1,3-dichloropropylene)	$CH_3CCl{=}CHCl$	110.97	76		
trans-1,3-Dichloropropene (cis-1,3-Dichloropropylene)	$ClCH_2CH{=}CHCl$	110.97	112.0		
1,1,2-Trichloroethane (Vinyl trichloride)	$CH_2ClCHCl_2$	133.41	113.8	-36.5	79-00-5
Toluene (Methyl benzene)	$C_6H_5CH_3$	92.15	110.6	-95.0	108-88-3
1,2-Dibromoethane (Ethylene dibromide)	$BrCH_2CH_2Br$	187.88	131.3	9.8	106-93-4
Tetrachloroethylene (Perchloroethylene)	$Cl_2C{=}CCl_2$	165.83	121.1	-19.0	127-18-4
Chlorobenzene (Phenyl chloride)	C_6H_5Cl	112.56	132.0	-45.6	108-90-7
Ethylbenzene	$C_6H_5C_2H_5$	106.17	136.2	-95.0	100-41-4
m-Xylene (1,3-Dimethylbenzene)	$1,3\text{-}(CH_3)_2C_6H_4$	106.17	139.1	-47.9	
p-Xylene (1,4-Dimethylxylene)	$1,4\text{-}(CH_3)_2C_6H_4$	106.17	138.3	13.3	
Styrene (Vinyl benzene)	$C_6H_5CH{=}CH_2$	104.16	145.2	-30.6	100-42-5
1,1,2,2-Tetrachloroethane	$CHCl_2CHCl_2$	167.85	146.2	-36.0	79-34-5
o-Xylene (1,2-Dimethylbenzene)	$1,2\text{-}(CH_3)_2C_6H_4$	106.17	144.4	-25.2	
1,3,5-Trimethylbenzene (Mesitylene)	$1,3,5\text{-}(CH_3)_3C_6H_6$	120.20	164.7	-44.7	108-67-8
1,2,4-Trimethylbenzene (Pseudocumene)	$1,2,4\text{-}(CH_3)_3C_6H_6$	120.20	169.3	-43.8	95-63-6
m-Dichlorobenzene (1,3-Dichlorobenzene)	$1,3\text{-}Cl_2C_6H_4$	147.01	173.0	-24.7	541-73-1
Benzyl chloride (α-Chlorotoluene)	$C_6H_5CH_2Cl$	126.59	179.3	-39.0	100-44-7
o-Dichlorobenzene (1,2-Dichlorobenzene)	$1,2\text{-}Cl_2C_6H_4$	147.01	180.5	-17.0	95-50-1
p-Dichlorobenzene (1,4-Dichlorobenzene)	$1,4\text{-}Cl_2C_6H_4$	147.01	174.0	53.1	106-46-7
1,2,4-Trichlorobenzene	$1,2,4\text{-}Cl_3C_6H_3$	181.45	213.5	17.0	120-82-1
Hexachlorobutadiene (1,1,2,3,4,4-Hexachloro-1,3-butadiene)					

Volatile Organic Compound Data Sheet.

These compounds have been measured at the parts per billion by volume level. These are standard (i.e., typically applicable) operating procedures which may be varied or changed as required, dependent on site conditions, equipment limitations, or limitations imposed by the procedure or other procedure limitations. In all instances, the ultimate procedures employed should be documented and associated with the final report.

Mention of trade names or commercial products does not constitute U.S. Environmental Protection Agency endorsement or recommendation for use.

2. METHOD SUMMARY

Both subatmospheric pressure and pressurized sampling modes use an initially evacuated canister. Both modes may also use a mass flow controller/vacuum pump arrangement to regulate flow. With the above configuration, a sample of ambient air is drawn through a sampling train comprised of components that regulate the rate and duration of sampling into a pre-evacuated Summa-passivated canister. Alternatively, subatmospheric pressure sampling may be performed using a fixed orifice, capillary, or adjustable micrometering valve in lieu of the mass flow controller/vacuum pump arrangement for taking grab samples or short duration time-integrated samples. Usually, the alternative types of flow controllers are appropriate only in situations where screening samples are taken to assess for future sampling activities.

3. SAMPLE PRESERVATION, CONTAINERS, HANDLING, AND STORAGE

After the air sample is collected, the canister valve is closed, an identification tag is attached to the canister, and the canister is transported to a laboratory for analysis. Upon receipt at the laboratory, the canister tag data are recorded. Sample holding times and expiration should be determined prior to initiating field activities.

4. INTERFERENCES AND POTENTIAL PROBLEMS

Contamination may occur in the sampling system if canisters are not properly cleaned before use. Additionally, all other sampling equipment (e.g., pump and flow controllers) should be thoroughly cleaned.

5. EQUIPMENT/APPARATUS

The following equipment/apparatus (Appendix A) is required.

5.1 SUBATMOSPHERIC PRESSURE SAMPLING EQUIPMENT

1. ***VOC Canister Sampler***—Whole air sampler capable of filling an initially evacuated canister by action of the flow controlled pump from vacuum to near atmospheric pressure (Andersen Samplers Inc., Model 87-100 or equivalent).

2. ***Sampling Inlet Line***—Stainless steel tubing to connect the sampler to the sample inlet.

3. ***Sample Canister***—Leak-free stainless steel pressure vessels of desired volume with valve and Summa-passivated interior surfaces (Scientific Instrumentation Specialist, Inc., ID 83843, Andersen Samplers, Inc., or equivalent).

4. ***Particulate Matter Filter***—2-µm sintered stainless steel in-line filter (Nupro Co., Model SS-2F-K4-2, or equivalent).

5. ***Chromatographic Grade Stainless Steel Tubing and Fittings***—For interconnections (Alltech Associates, Cat. No. 8125, or equivalent). All materials in contact with sample, analyte, and support gases should be chromatographic grade stainless steel.

6. ***Fixed Orifice, Capillary, or Adjustable Micrometering Valve***—Used in lieu of the electronic flow controller/vacuum pump for grab samples or short duration time-integrated samples.

5.2 PRESSURIZED SAMPLING EQUIPMENT

1. ***VOC Canister Sampler***—Whole air sampler capable of filling an initially evacuated canister by action of the flow controlled pump from vacuum to near atmospheric pressure (Andersen Samplers Inc., Model 87-100).

2. ***Sampling Inlet Line***—Stainless steel tubing to connect the sampler to the sample inlet.

3. ***Sample Canister***—Leak-free stainless steel pressure vessels of desired volume with valve and Summa passivated interior surfaces (Scientific Instrumentation Specialist, Inc., ID 83843, Andersen Samplers, Inc., or equivalent).

4. ***Particulate Matter Filter***—2-µm sintered stainless steel in-line filter (Nupro Co., Model SS-2F-K4-2, or equivalent).

5. ***Chromatographic Grade Stainless Steel Tubing and Fittings***—For interconnections (Alltech Associates, Cat. No. 8125, or equivalent). All materials in contact with sample, analyte, and support gases should be chromatographic grade stainless steel.

6. REAGENTS

Not applicable.

7. PROCEDURE

7.1 SUBATMOSPHERIC PRESSURE SAMPLING

7.1.1 Sampling Using a Fixed Orifice, Capillary, or Adjustable Micrometering Valve

1. Prior to sample collection, the appropriate information is completed on the Summa Air Sampling Work Sheet (Appendix B).

2. A canister, which is evacuated to 0.05 mm Hg and fitted with a flow restricting device, is opened to the atmosphere containing the VOCs to be sampled.

3. The pressure differential causes the sample to flow into the canister.

4. This technique may be used to collect grab samples (duration of 10-30 seconds) or time-integrated samples (duration of 12-24 hours). The sampling duration depends on the degree to which the flow is restricted.

5. A critical orifice flow restrictor will have a decrease in the flow rate as the pressure approaches atmospheric.

6. Upon sample completion at the location, the appropriate information is recorded on the Summa Air Sampling Work Sheet. VOCs are to be sampled.

7.1.2 Sampling Using a Mass Flow Controller/Vacuum Pump Arrangement (Andersen Sampler Model 87-100)

1. Prior to sample collection, the appropriate information is completed on the Summa Air Sampling Work Sheet (Appendix B).

2. A canister, which is evacuated to 0.05 mm Hg and connected in line with the sampler, is opened to the atmosphere containing the VOCs to be sampled.

3. A whole air sample is drawn into the system through a stainless steel inlet tube by a direct drive blower motor assembly.

4. A small portion of this whole air sample is pulled from the inlet tube by a specially modified inert vacuum pump in conjunction with a mass flow controller.

5. The initially evacuated canister is filled by action of the flow controlled pump to near atmospheric pressure.

6. A digital time-program is used to pre-select sample duration and start and stop times.

7. Upon sample completion at the location, the appropriate information is recorded on the Canister Sampling Field Data Sheet.

7.2 PRESSURIZED SAMPLING

7.2.1 Sampling Using a Mass Flow Controller/Vacuum Pump Arrangement (Anderson Sampler Model 87-100)

1. Prior to sample commencement at the location, the appropriate information is completed on the Canister Sampling Field Data Sheet.

2. A canister, which is evacuated to 0.05 mm Hg and connected in line with the sampler, is opened to the atmosphere.

3. A whole air sample is drawn into the system through a stainless steel inlet tube by a direct drive blower motor assembly.

4. A small portion of this whole air sample is pulled from the inlet tube by a specially modified inert vacuum pump in conjunction with a mass flow controller.

5. The initially evacuated canister is filled by action of the flow controlled pump to a positive pressure not to exceed 25 psig.

6. A digital time-programmer is used to pre-select sample duration and start and stop times.

7. Upon sample completion at the location, the appropriate information is recorded on the Canister Sampling Field Data Sheet.

8. CALCULATIONS

A flow control device is chosen to maintain a constant flow into the canister over the desired sample period. This flow rate is determined for the canister is filled to approximately 88.1 kPa for subatmospheric pressure sampling or to approximately one atmosphere above ambient pressure for pressurized sampling over the desired sample period. The flow rate can be calculated by:

$$F = \frac{(P)(V)}{(T)(60)}$$

where

F = Flow rate (cm^3/min)
P = Final canister pressure, atmospheres absolute
V = Volume of the canister (cm^3)
T = Sample period (hours).

For example, if a 6-L canister is to be filled to 202-kPa (two atmospheres) absolute pressure in 24 hours, the flow rate can be calculated by:

$$F = \frac{(2)(6000)}{(24)(60)} * 8.3 cm^3/min$$

If the canister pressure is increased, a dilution factor is calculated and recorded on the sampling data sheet.

where

$$\text{Dilution Factor} = \frac{Ya}{Xa}$$

Xa = Canister pressure (kPa, psia) absolute before dilution.
Ya = Canister pressure (kPa, psia) absolute after dilution.

After sample analysis, detected VOC concentrations are multiplied by the dilution factor to determine concentration in the sampled air.

9. QUALITY ASSURANCE/QUALITY CONTROL

The following general quality assurance procedures apply (VIP-8, U.S. Environmental Protection Agency 600/9-87-010):

1. Data must be documented on standard volume sets when sampling ambient air: chain-of-custody records, field data sheets, or using solid adsorbents (atmospheric site logbooks. Environ. 18:855-859. 1984).

2. All instrumentation must be operated in accordance with operating instructions as supplied by the manufacturer, unless otherwise specified in the work plan. Equipment checkout and calibration activities must occur prior to sampling/operation, and must be documented.

10. DATA VALIDATION

Not applicable.

11. SAFETY AND HEALTH

When working with potentially hazardous materials, follow U.S. Environmental Protection Agency, Occupational Safety and Health Administration, and Corporate safety and health practices. Specifically, pressurizing of Summa canisters should be performed in a well ventilated room, or preferably under a fume hood. Care must be taken not to exceed 40 psi in the canisters. Canisters are under pressure, albeit only 20-30 psi, and should not be dented or punctured. They should be stored in a cool dry place and always be placed in their plastic shipping boxes during transport and storage.

12. REFERENCES

McClenny, W.A., J.D. Pleil, T.A. Lumpkin, and K.D. Oliver. 1987. Update on Canister-Based Samplers for VOCs. Proceedings of the 1987 EPA/APCA Symposium on Measurement of Toxic and Related Air Pollutants. May. APCA Publication.

Riggin, R.M. 1983. Technical Assistance Document for Sampling and Analysis of Toxic Organic Compounds in Ambient Air. EPA-600/4-83-027. U. S. Environmental Protection Agency, Research. Triangle Park, North Carolina.

Walling, J.F. 1986. The Utility of Distributed Air Monitoring VOC Sources. EPA-340/1-88-015, U.S. Environmental Protection Agency, Office of Air Quality Planning and Standards. Washington, D.C. June.

Appendix A

Equipment/Apparatus

Appendix A

Subatmospheric/Pressurized Sampling Equipment

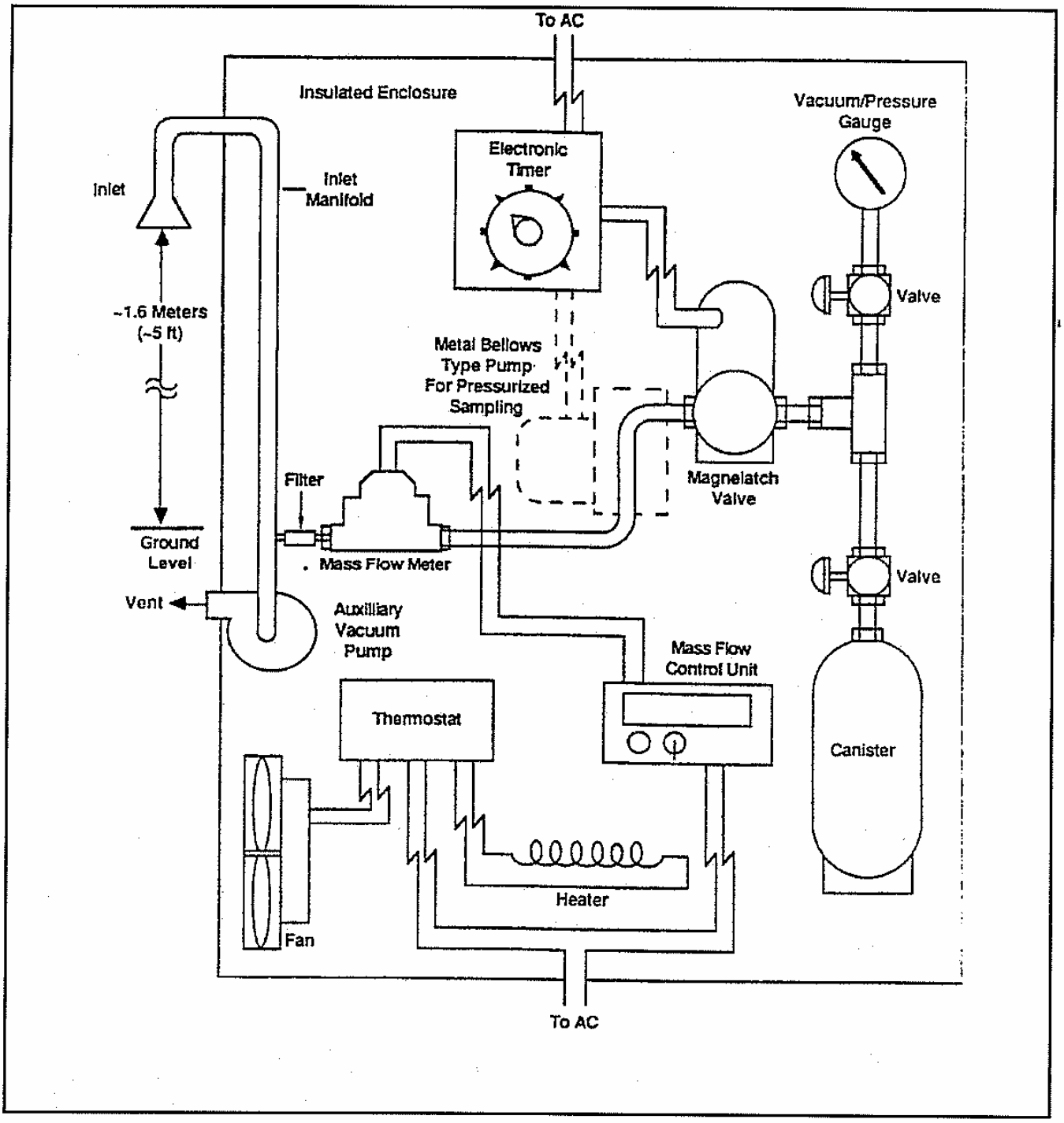

Appendix B

Summa Air Sampling Work Sheet

Appendix B

Summa Air Sampling Work Sheet

Page ___ of ___

SUMMA AIR SAMPLING WORK SHEET

Site: _____ Site#: _____
Samplers: _____ Work Assignment Manager: _____
Date: _____ Project Leader: _____

Sample #					
Location					
SUMMA ID					
Orifice Used					
Analysis/Method					
Time (Start)					
Time (Stop)					
Total Time					
SUMMA WENT TO AMBIENT	YES/NO	YES/NO	YES/NO	YES/NO	YES/NO
Pressure Gauge					
Pressure Gauge					
Flow Rate (Pre)					
Flow Rate (Post)					
Flow Rate (Average)					

MET Station On-site? Y / N

General Comments:

Standard Operating Procedure No. 007
for
Surface Water Sampling

Prepared by

EA Engineering, Science, and Technology, Inc.
11019 McCormick Road
Hunt Valley, Maryland 21031

Revision: 1
August 2010

CONTENTS

Page

1. SCOPE AND APPLICATION 1

2. MATERIALS 1

3. PROCEDURE 1

4. MAINTENANCE 4

5. PRECAUTIONS 4

6. REFERENCES 4

1. SCOPE AND APPLICATION

The purpose of this Standard Operating Procedure (SOP) is to delineate protocols for sampling surface water. This procedure can be applied to the collection of surface water samples from marine and estuarine systems, streams, rivers, ditches, lakes, ponds, and lagoons. Surface water samples provide an indication of the amount of contaminant in the surface water. It is, therefore, important to collect a representative sample.

2. MATERIALS

The following materials may be required:

0.45-μ disposable filters	Sample bottles
Cooler with ice	Short-handled dip sampler (PTFE or stainless steel)
Long-handled dip sampler (polytetrafluoroethelyne [PTFE] or stainless steel)	Stainless steel or PTFE-lined bucket
Peristaltic pump with 0.45-μM filters and disposable Tygon tubing	Niskin bottle (or similar sampling device)

3. PROCEDURE

For all surface water samples, use a Global Positioning System to record sampling coordinates and mark the sampling locations on a site map. Photograph (if cameras are allowed onsite) and describe each location, place a numbered stake above the visible high water mark on the bank closest to the sampling location, and/or mark adjacent trees with surveyor's flagging. The photographs and descriptions must be adequate to allow the sampling station to be relocated at some future date by someone other than the original sampling crew. Use a long-handled dip sampler where access is poor or non-contact with water is suggested in the Health and Safety Plan.

Sampling should be performed deliberately and methodically to minimize disturbance of bottom sediments, yet as quickly as possible to ensure a representative sample. If wading in a stream, sample downstream of the sampling location to prevent disturbance of the bottom. To prevent contamination of the exterior of the sample container, and/or potential contamination of the surface water sample by laboratory contaminants on the exterior of the bottle, the sample container should never be dipped into the water, rather a decontaminated sampling device should be used to collect unfiltered samples.

Sampling with the PTFE or stainless steel sampler (long-handled or measuring cup-type):

- Remove the cap from the sample bottle.
- Dip a sample of surface water using the sampler.

- Tilt sample bottle and gently pour sample from sampler into the bottle. Allow the sample to trickle down the side of the bottle. Avoid aerating the sample.

- Add preservative as required by SOP No. 039. Replace cap, and place in cooler immediately.

Sampling with stainless steel or PTFE-lined bucket:

- Remove cap from sample bottle.

- Gently dip collection bucket in the water. Fill bucket and carefully lift from water body.

- Tilt sample bottle and gently pour sample from sampler into the bottle. Allow the sample to trickle down the side of the bottle. Avoid aerating the sample.

- Add preservative as specified by the project-specific Sampling and Analysis Plan. Replace cap, and place in cooler immediately.

– OR –

- Use smaller sampling cup to transfer sample from bucket to sample bottle as described above.

Sampling with a Niskin bottle (or similar device):

- Prepare the bottle for deployment by placing the ends of the bottle in the open position and lock the ends into the trigger mechanism.

- Lower the bottle to desired depth of sampling (on either a wire cable or rope).

- Place a messenger (triggering device) on the cable/rope and deploy by allowing free-fall down the cable/rope.

- Bring the bottle back to the surface and pour sample into a sample container.

Sampling with a peristaltic pump and Tygon tubing:

- Cut a length of Tygon tubing to the depth of sampling specified by the client or project-specific Sampling and Analysis Plan.

- Insert one end of the tubing into the intake hose on the peristaltic pump.

- Place a weight on the tubing and lower to the specified depth;

- Cut a length of tubing and insert into the output (out-flow) hose on the peristaltic pump.

- After applying power to the peristaltic pump, proceed to pump site water through the tubing apparatus. Approximately five times the hose volume should be pumped through the tubing before sampling.

- Fill the required sample containers.

- If filtering is required, obtain filtered sample by placing a 0.45-µM in-line filter on the end of the output tube and fill the required sample containers.

Both filtered and unfiltered samples may be required for metals analyses. Bulk samples for filtration will be collected using the stainless steel or PTFE-lined bucket method described above. Sample filtration must be performed immediately upon retrieval of the bulk sample as follows.

Filtration will be performed immediately after collecting sample. Set up filtration equipment prior to collecting sample. Filtration may be accomplished by gravity or, if necessary due to slow filtering, a peristaltic pump will be used to pressure filter the sample. Vacuum filtration will not be used due to the possibility of analyte volatilization.

Gravity filtration will be accomplished as follows:

- Using decontaminated forceps, place a 0.45-µM membrane in a decontaminated filter funnel.

- Slowly pour sample into the funnel and collect filtrate directly into appropriate sample container(s).

- Add preservative(s) as required by project-specific Sampling and Analysis Plan. Immediately cap container and place in cooler.

- Dispose of filter membrane.

Pressure filtration will be accomplished as follows:

- Using previously assembled disposable tubing, 45-µ in-line filter, and peristaltic pump, filter sample from collection bucket into appropriate container.

- Adjust pump rate to avoid aeration of sample.

- Fill container, preserve as indicated in SOP No. 039, immediately cap container, and place in cooler.

- Dispose of filter and tubing.

Refer to SOP Nos. 001, 002, 004, 005, 016, and 039.

4. MAINTENANCE

Refer to manufacturer's specifications for maintenance procedures on generators and pumps.

5. PRECAUTIONS

Avoid disturbing bottom sediments.

Consult the Health and Safety Plan prior to collecting any samples for personal protective equipment such as dermal and respiratory protection and personal flotation devices when sampling in or near deep water or from boats.

Always decontaminate the sampling and filtration equipment, and change gloves between sampling locations to minimize the risk of cross-contamination.

Always set up generators downwind of working area. Never service generators onsite.

6. REFERENCES

None.

Standard Operating Procedure No. 008
for
pH Measurement

Prepared by

EA Engineering, Science, and Technology, Inc.
11019 McCormick Road
Hunt Valley, Maryland 21031

Revision 0
August 2007

CONTENTS

Page

1. SCOPE AND APPLICATION 1

2. MATERIALS 1

3. PROCEDURE 1

3.1 Calibration Check 1
3.2 pH Measurements 2

4. MAINTENANCE 3

5. PRECAUTIONS 3

6. REFERENCES 3

1. SCOPE AND APPLICATION

The purpose of this Standard Operating Procedure (SOP) is to delineate protocols for measuring the pH of all types of aqueous solutions, including drinking water, saline water, and industrial and domestic wastes. As a measure of the hydrogen ion content of a solution, pH gives a general indication of the acidity or alkalinity of a water sample.

Use of brand names in this SOP is not intended as endorsement or mandate that a given brand be used. Alternate equivalent brands of detectors, sensors, meters, etc. are acceptable. If alternate equipment is to be used, the contractor will provide applicable and comparable SOPs for the maintenance and calibration of same.

2. MATERIALS

The following materials may be required:

Φ ® 12 pH Meter
Automatic temperature compensator (ATC) probe
Beakers
Combination (pH) electrode
Commercial buffer solutions (standards) of pH 4.00, 7.00, and 10.00
HPLC-grade water
Laboratory wipes for blotting electrodes
Wash bottle

3. PROCEDURE

3.1 CALIBRATION CHECK

Calibration of the pH meter will be checked on a daily basis. A two-point calibration should be used as follows:

1. Prepare beakers of buffer solutions of pH 4.00, 7.00, and 10.00.
2. Calibration should closely bracket the expected pH range of the samples to be taken.
3. Turn on instrument, clear instrument.
4. Rinse the electrode with distilled water and blot excess.
5. Immerse probes in beaker of pH 4.00 or 7.00 standard, swirl gently.
6. Press pH key, then STD key.

7. Keep the probes in the sample until the reading stabilizes. The reading should be the pH of the standard.

8. Rinse the electrode with distilled water and blot excess.

9. Repeat the procedure with pH 7.00 and 10.00 standards.

10. Record the initial readings.

11. If the measured values vary from the expected value by greater than 0.2 pH units, recalibrate the instrument with fresh aliquots of buffer solution. If the discrepancy persists, alert the Field Operations Leader, who has the option of trying to fix the meter or obtaining a second pH meter.

12. Record all measurements in the field logbook.

13. Verify calibration by reading the pH of the third buffer solution.

14. Refer to SOP No. 016.

3.2 pH MEASUREMENTS

Measurements of pH will be taken using the two-point standardization method as follows:

1. Connect the ATC and pH electrodes to the appropriate inputs.

2. Turn on instrument, clear instrument.

3. Prepare two small beakers of standard buffer solutions. Ideally, the pH values of these standards will “bracket” the expected pH value of the sample and be as close as possible to the pH of the sample.

4. Rinse a small beaker with distilled water, then sample water. Fill the beaker with sample water.

5. Rinse the probes with distilled water. Blot excess.

6. Immerse electrode and ATC in first standard. Swirl gently. Press pH key and STD key. Wait for display to stop flashing.

7. Rinse the probes with distilled water. Blot excess.

8. Immerse electrode and ATC in second standard. Swirl gently. Press STD key. Wait for display to stop flashing.

9. Rinse the probes with distilled water. Blot excess.

10. Immerse the probes in the sample and swirl gently, keeping the probes in the sample until the display stops flashing.

11. Record the sample pH and temperature after stabilization. Note any problems such as meter drift.

12. Rinse the probes with distilled water. Blot excess.

13. Repeat Steps 9 through 12 for additional samples.

Decontaminate probe according to manufacturer's specifications.

Decontaminate beakers according to SOP No. 005, Section 3.3.1.4 (Labware).

4. MAINTENANCE

The following steps will be taken to maintain the pH meter:

1. Check the batteries each time the meter is used.

2. Keep the probe stored in a 0.1 M KCl solution adjusted to pH 4 when the meter is not in use. Alternatively, the electrode may be rinsed with deionized water and the protective cap put on, trapping any residual water inside it (do not blot the electrode dry prior to putting the cap on).

5. PRECAUTIONS

Remove coatings of oil material or particulate matter that can impair electrode response by gentle wiping or detergent washing, followed by distilled water rinsing.

As noted in Section 1, these procedures may not apply to alternate manufacturer's equipment.

Calibration is always performed using the pH 7.00 and one end point (pH4.00 or 11.00) standard. **Never** calibrate the instrument using two end points only.

6. REFERENCES

Beckman Instruments, Inc. Users Manual for Φ® 10 pH Meter, Φ® 11 pH meter, and Φ® 12 pH/ISE Meter.

Franston, M.H. et al. (eds). 1981. Standard Methods for the Examination of Water and Wastewater, 15th Edition. American Public Health Association, American Water Works Association and Water Pollution Control Federation.

U.S. Environmental Protection Agency. 1983. Methods for Chemical Analysis of Water and Wastes. March.

Standard Operating Procedure No. 009
for
Temperature Measurement

Prepared by

EA Engineering, Science, and Technology, Inc.
11019 McCormick Road
Hunt Valley, Maryland 21031

Revision 0
August 2007

CONTENTS

Page

1. SCOPE AND APPLICATION 1

2. MATERIALS 1

3. PROCEDURE 1

4. MAINTENANCE 1

5. PRECAUTIONS 1

6. REFERENCES 1

1. SCOPE AND APPLICATION

The purpose of this Standard Operating Procedure (SOP) is to delineate protocols for measuring the temperature of a solid or liquid sample, in particular, for measuring water temperature. Groundwater temperature does not vary dramatically over the course of a year. Therefore, groundwater temperature can be used to help identify an aquifer, identify stream reaches where groundwater inflow is occurring, identify thermal gradients in lakes or ponds, and also indicate when sufficient water has been removed from a well during purging.

2. MATERIALS

The following materials may be required: digital reading thermocouple thermometer in combination meter or in a stick. Accuracy = ±0.5°C.

3. PROCEDURE

Rinse the probe with distilled water. Insert the probe into the sample, and leave it in the sample until the temperature stabilizes. Record the temperature reading, being sure to indicate °C or °F. Decontaminate the probe according to Section 3.3 of SOP No. 005 (Field Decontamination).

Refer to SOP Nos. 005 and 016.

NOTE: °C = (°F - 32) (5/9)
°F = ([9/5]°C) + 32.

4. MAINTENANCE

Not applicable.

5. PRECAUTIONS

None.

6. REFERENCES

U.S. Environmental Protection Agency. 1983. Methods for Chemical Analysis of Water and Wastes. March.

Standard Operating Procedure No. 010
for
Water Level and
Well Depth Measurements

Prepared by

EA Engineering, Science, and Technology, Inc.
11019 McCormick Road
Hunt Valley, Maryland 21031

Revision 0
August 2007

CONTENTS

Page

1. SCOPE AND APPLICATION 1

2. MATERIALS 1

3. PROCEDURE 1

3.1 Preliminary Steps 1
3.2 Operation 1
3.3 Data Recording and Manipulation 4

4. CALIBRATION 4

5. PRECAUTIONS 4

6. REFERENCES 4

1. SCOPE AND APPLICATION

The purpose of this Standard Operating Procedure (SOP) is to delineate protocols for measuring water level and well depth. This procedure is applicable to the sampling of monitoring wells and must be performed prior to any activities which may disturb the water level, such as purging or aquifer testing.

2. MATERIALS

The following materials may be required:

Electric water level indicator (dipmeter) with cable measured at 0.01-ft increments OR weighted steel tape and chalk OR transducer and datalogger
Oil/water interface probe
Plastic sheeting
Photoionization detector or intrinsically safe flame ionization detector

3. PROCEDURE

3.1 PRELIMINARY STEPS

Locate the well and verify its position on the site map. Record whether positive identification was obtained, including the well number and any identifying marks or codes contained on the well casing or protective casing. Gain access to the top of the well casing.

Locate the permanent reference mark at the top of the casing. This reference point will be scribed, notched, or otherwise noted on the top of the casing. If no such marks are present, measure to the top of the highest point of the well casing and so note this fact in the field logbook. Determine from the records and record in the notebook the elevation of this point.

Record any observations and remarks regarding the completion characteristics and well condition, such as evidence of cracked casing or surface seals, security of the well (locked cap), and evidence of tampering.

Keep all equipment and supplies protected from gross contamination; use clean plastic sheeting. Keep the water level indicator probe in its protective case when not in use.

3.2 OPERATION

Sample the air in the well head for gross organic vapors by lifting the well cap only high enough for an organic vapor meter (photoionization detector or flame ionization detector) probe to be entered into the well casing. This will indicate the presence of gross volatile contaminants as well as indicating potential sampler exposure.

Remove cap. Allow well to vent for 60-90 seconds. Resample headspace. Record both readings. If the second reading is lower than the first, use the second reading to determining whether respiratory protection will be required during subsequent water level and well depth determinations, and sampling.

Note that all headspace sampling must be performed at arm's length and from the upwind side of the well if possible.

Refer to SOP Nos. 011, 023, or 024 as appropriate.

If non-aqueous phase liquid (NAPL) contamination is suspected[1], use an interface probe to determine the existence and thickness of NAPLs.

Open the probe housing, turn the probe on, and test the alarm. Slowly lower the probe into the well until the alarm sounds. A continuous alarm indicates a NAPL while an intermittent alarm indicates water. If a NAPL is detected, record the initial level (first alarm). Mark the spot by grasping the cable with the thumb and forefingers at the top of the casing. If a mark is present on the casing, use the mark as the reference point. If no mark is present, use the highest point on the casing as the reference point. Withdraw the cable sufficiently to record the depth.

Continue to slowly lower the probe until it passes into the water phase. Slowly retract the probe until the NAPL alarm sounds and record that level in the manner as described above.

Record the thickness of the light NAPL[2] (Section 3.3).

Continue to slowly lower the interface probe through the water column to check for the presence of dense NAPL.

Measure and record the thickness of the dense NAPL layer (if any) as described above.

Slowly raise the interface probe, recording the depth to each interface as the probe is withdrawn. If there is a discrepancy in depths, clean the probe sensors and re-check the depths.

NOTE: Air/liquid interface depth is more reliable if probe is lowered into liquid. NAPL/water depths are more accurate if probe is moved from water into NAPL.

Always lower and raise interface probe slowly to prevent undue mixing of media.

---

1. Interface probes will be used in all wells for first round sampling, regardless of site history. If no NAPLs are detected during the first round of sampling, this step may be omitted during subsequent sampling events **unless** conditions such as site history or headspace vapors would indicate otherwise.
2. If NAPL is viscous, such as coal tar or weather bunker oil, several confirmation measurements should be made after decontamination of the probe to verify that the NAPL is not sticking to the probe and causing erroneous readings. One way to accomplish this would be to partially fill a 5-gal bucket with water and dip the probe to ensure that decontamination has effectively removed the NAPL.

Always perform NAPL check in wells installed in areas with suspected NAPL contamination. Always perform NAPL check if headspace test reveals presence of volatiles. Always perform NAPL check the first time a well is sampled. **If** a well has been sampled previously **and** no NAPLs were present **and** none of the preceding conditions are met, the NAPL check may be omitted.

If no NAPL is present, use an electronic water level detector as follows:

- Remove the water level indicator probe from the case, turn on the sounder, and test check the battery and sensitivity scale by pushing the red button. Adjust the sensitivity scale until you can hear the buzzer.

- Slowly lower the probe and cable into the well, allowing the cable reel to unwind. Continue lowering until the meter buzzes. Very slowly, raise and lower the probe until the point is reached where the meter **just** buzzes. Marking the spot by grasping the cable with the thumb and forefingers at the top of the casing. If a mark is present on the casing, use the mark as the reference point. If no mark is present, use the highest point on the casing as the reference point. Withdraw the cable and record the depth.

Alternatively use a steel tape with an attached weight if aquifer gradients are lower than 0.05 ft/ft. Due to the possibility of adding unknown contaminants from chalk colorants, only white chalk is permitted.

Rub chalk onto the first 1 ft of the steel tape and slowly lower the chalked end into the well until the weighted end is below the water surface. (A small splash can be heard when the weighted end hits the water surface.)

Using the method described above read and record the length from the steel tape.

Remove the steel tape. The chalk will be wet or absent where the tape was below the water surface. Locate, read, and record this length. Subtract wetted length from total length and record the difference. This is the depth to water table.

Transducers and dataloggers will be used where water level fluctuations over time are to be measured, such as tidal fluctuation studies (SOP No. 045) and aquifer (hydraulic) tests (SOP No. 033). Note that transducers are inappropriate for measuring well depth.

Slowly lower the transducer into the well until it is below the lowest possible piezometric level (typically 2-3 ft below the water table).

Tape the umbilical to the protective casing to prevent the transducer from falling further.

Attach the umbilical leads to the datalogger.

Turn datalogger on.

To measure the well depth, lower electric water level indicator probe or tape until slack is noted. Very slowly raise and lower the cable until the exact bottom of the well is "felt." Measure (cable) or read the length (tape) and record the depth.

Note that if the electric water level indicator is used to determine depth of well, the offset distance between the tip of the probe and the electrode must be added to the reading to determine actual depth.

Withdraw the probe or tape. Decontaminate the probe(s) and cable(s).

3.3 DATA RECORDING AND MANIPULATION

Record the following computations:

- Date and time
- Weather
- Method of measurement
- Casing elevation
- NAPL surface elevation = casing elevation – depth to NAPL
- NAPL thickness = depth to bottom of NAPL – depth to top of NAPL
- Water level elevation = casing elevation – depth to water
- Well bottom elevation = casing elevation – depth to bottom (or read directly from tape).

Refer to SOP Nos. 005 and 016.

4. CALIBRATION

No calibration is needed.

5. PRECAUTIONS

Depending upon the device used, correction factors may be required for some measurements. Check instrument batteries prior to each use. Exercise care not to break the seals at the top of the electric water level indicator probe.

6. REFERENCES

McAlary, T.A. and J.F. Barker. 1987. Volatilization Losses of Organics during Groundwater Sampling from Low Permeability Materials in Groundwater Monitoring Review. Fall.

Thornhill, J.T. 1989. Accuracy of Depth to Groundwater Measurements in U.S. Environmental Protection Agency Superfund Groundwater Issue EPA/540/4-89/002.

Standard Operating Procedure No. 012
for
Specific Conductance Measurements

Prepared by

EA Engineering, Science, and Technology, Inc.
11019 McCormick Road
Hunt Valley, Maryland 21031

Revision 0
August 2007

CONTENTS

Page

1. SCOPE AND APPLICATION 1

2. MATERIALS 1

3. PROCEDURE 1

   3.1 Calibration 1
   3.2 Operation 2

4. MAINTENANCE 2

5. PRECAUTIONS 3

6. REFERENCES 3

1. SCOPE AND APPLICATION

The purpose of this Standard Operating Procedure (SOP) is to delineate protocols for measuring the specific conductance of any aqueous solution, including drinking water, saline water, and industrial and domestic wastes. Conductivity is the ability of an aqueous solution to pass an electrical current. The current is primarily carried by dissolved inorganic ions such as chlorides, nitrates, sulfates, along with cations such as sodium, calcium, magnesium and others. Organic compounds do not carry current and, therefore, have almost no conductivity.

2. MATERIALS

The following materials may be required:

Conductivity meter with integral temperature compensation; accuracy = ±2 percent at 25°C (77°F)
Conductivity cell
Appropriate conductivity reference solution
High performance liquid chromatography (HPLC)-grade water (see SOP No. 005, Footnote 2)
Thermometer (optional, Section 5)

3. PROCEDURE

3.1 CALIBRATION

The specific conductivity meter should be calibrated at the beginning of each day[1] as follows:

1. Thoroughly rinse the probe with appropriate conductivity reference solution.

2. Zero meter if appropriate.

3. Measure the specific conductance of fresh appropriate conductivity reference solution record it in the field notebook, and adjust the calibration knob until the meter reads properly.

4. Rinse probe with HPLC-grade water.

5. Measure the specific conductance of HPLC-grade water and record in the field logbook. If specific conductivity of HPLC-grade water is not 0 (±2 percent) recalibrate instrument.

1. The meter should be recalibrated any time the readings are suspect (e.g., out of expected range).

3.2 OPERATION

The specific conductivity meter will be operated as follows:

1. Thoroughly rinse the probe and sample beaker with sample water.

2. Measure the temperature of the sample water. Convert Fahrenheit temperature readings to Celsius using C = 5/9(F - 32) if Celsius temperature is not obtained directly.

3. Place the probe in the sample beaker with sufficient sample to completely submerge the probe. Swirl the probe to remove any air bubbles trapped in the probe.

4. Select the highest multiplier scale on the meter and turn the instrument on. Progressively use lower multiplier scales until a mid-scale deflection is obtained.

5. If appropriate, check probe accuracy by pressing cell test button. If value change is >10 percent check probe.

6. Record the temperature and conductivity values.

7. Specific conductivity values are corrected for temperature using:

   K^25^oC = {*K measured*} over {1+ 0.0191 (t-25)}

   where

   K = Conductivity in µmhos
   t = Temperature, °C

8. Decontaminate the probe (see SOP No. 005, Section 3.3.3).

Refer to SOP Nos. 005 and 016.

4. MAINTENANCE

The following steps will be taken to properly maintain the conductivity meter:

1. Check the batteries each time the instrument is used.

2. Inspect the probe on a daily basis for damage or loss of platinum black plating from the electrode. If the platinum is damaged, alert the Field Team Leader and arrange to get a new cell.

3. Follow manufacturer's specifications regarding storage of probe between uses.

5. PRECAUTIONS

Be certain there is no air in the cell before taking a reading. If conductivity meter does not have integral temperature compensation, use a thermometer to determine temperature of the sample.

6. REFERENCES

Manufacturer's Manual.

U.S. Environmental Protection Agency. 1983. Methods for Chemical Analysis of Water and Wastes. March.

Standard Operating Procedure No. 013
for
Collection of Monitoring Well Samples

Prepared by

EA Engineering, Science, and Technology, Inc.
11019 McCormick Road
Hunt Valley, Maryland 21031

Revision 0
August 2007

CONTENTS

Page

1. SCOPE AND APPLICATION 1

2. MATERIALS 1

3. PROCEDURE 1

   3.1 General 1
   3.2 General Rules for Groundwater Field Parameter Logbook 2
   3.3 Groundwater Sampling General Rules 2
   3.4 Sampling of Non-Aqueous Phase Liquids 4
   3.5 Well Purging General Rules 5
   3.6 Purging and Sampling with Bailers 6
   3.7 Purging with Pump, Sampling with Bailer 8
   3.8 Purging and Sampling with Low-Flow Pump 9

4. MAINTENANCE 10

5. PRECAUTIONS 10

6. REFERENCES 10

1. SCOPE AND APPLICATION

The purpose of this Standard Operating Procedure is to delineate protocols for the collection of groundwater samples from monitoring wells.

2. MATERIALS

The following materials may be required:

0.45 μM filters	Polyvinyl chloride bailer (for purging only)
Bladder pump (dedicated to one well only)	Sample bottles and labels
Conductivity meter	Stainless steel bailer (for purging and sampling)
Dissolved oxygen meter	Submersible pump and hose (for purging only)
Generator	Thermometer (optional)[1]
Logbook or book of field parameter forms	Transparent bailer with a double check valve
Peristaltic pump with tubing for filtering samples	Turbidity meter
pH meter with oxidation-reduction potential probe	Tygon tubing
Photoionization detector organic vapor analyzer.	Variable speed, low flow submersible pump (e.g., Grundfos MP1 groundwater sampling pump) (for purging and sampling)
Plastic sheeting	Water level indicator
Polypropylene rope	
Polytetrafluoroethelyne (PTFE) bailer with PTFE-coated stainless steel cable, double check valve top, and controlled flow bottom discharge attachment[2] for volatile organic compound (VOC) sampling (40-mL vials), and top discharge attachment for collecting larger samples (1-L bottles) (for purging and sampling)	

3. PROCEDURE

3.1 GENERAL

Groundwater sampling will follow these general steps:

- Arrive onsite
- Set up apparatus (generators, pumps, etc.)
- Glove
- Organic vapor check, water level, and well depth measurements

1. Temperature compensation and measurement capabilities are generally available as integral functions of pH meters and conductivity meters. If this is the case, a separate thermometer is not required.
2. Although use of a controlled flow bottom discharge valve is historically preferred, use of such a device can cause aeration of the sample.

- Sample non-aqueous phase liquids (NAPLs) (as required)
- Begin purge procedure
  - If using bailer to purge and sample, see Section 3.6
  - If using pump to purge and bailer to sample, see Section 3.7
  - If using bladder or low-flow pump to purge and sample, see Section 3.8
- Decontaminate/reglove
- Take samples
  - If with bailer, see Section 3.6
  - If with bladder or low flow pumps, see Section 3.8
- Decontaminate/dispose of wastes, move equipment to next site.

3.2 GENERAL RULES FOR GROUNDWATER FIELD PARAMETER LOGBOOK

Only one site or installation per logbook, and only one sampling location per page or form (if using pre-printed forms). The same book may be used for more than one sampling event. First five pages will be reserved for index, general notes, etc. Sign and date each entry. Last five pages will be reserved for recording calibration data for the pH, temperature, turbidity, oxidation-reduction potential, dissolved oxygen, and conductivity meters. Use the page number or a separately recorded "Cal Reference Number" to refer to each calibration. As appropriate, insert the cardboard flap under the form being filled out, so that writing does not go through to the pages below. As appropriate, fill in the forms from front to back of the logbook, tearing out the white copy for each sample when the sample has been collected. This copy goes in the cooler with the sample, directly to the laboratory. The original copy must be torn out before you write on the back of the duplicate form. As appropriate, duplicate copies, index pages, and calibration sheets remain intact.

3.3 GROUNDWATER SAMPLING GENERAL RULES

Groundwater samples will be collected from the least contaminated wells first, progressing to the most contaminated[3]. Upon arrival at the well site, immediately set up and organize the purging, sampling, and filtration equipment. If needed, due to muddy or contaminated ground, remoteness from sampling vehicle, and\or for placement of hose(s) and\or power cord if a pump is used, place clean plastic sheeting at, or around the well, to serve as a clean staging area for purging and sampling equipment, as conditions warrant. Care must be exercised not to step on plastic sheeting. If the well is remote from the sampling vehicle, set up the filtration equipment

3. First round samples are to be collected from upgradient wells first, moving to downgradient wells under the assumption that upgradient wells will be less contaminated than downgradient wells. Results of first round analysis may mandate a change in sampling sequence.

and place rope, wrapped bailer, and pre-labeled sample containers on the plastic sheet, from the well. When a pump is to be used, situate the portable generator on level ground approximately 15 ft away from and downwind from the well. All generator maintenance (oil and fueling) is to be performed offsite. If the hose(s) and/or power cord of the pump are not on a reel, place the pump with its hose and power cord on the plastic sheeting downhill from the well.

Check well headspace for organic vapor which may pose a health and safety hazard and indicate the presence of NAPL. Measure depth(s) to and thickness(es) of NAPL(s) as appropriate. Measure the depth to water and depth of well. From the water depth, well diameter, sand pack length, etc., calculate the equivalent volume (1 EV) of water in the well.

1 EV = volume in casing + volume in saturated sand pack. Therefore, if the water table lies below the top of the sandpack, use the following equation:

$$1\ EV = (\pi R_w^2 h_w) + (0.30\pi(R_s^2 - R_w^2)h_w) * (0.0043)$$

If the water table lies above the top of the sandpack use this equation:

$$1\ EV = [(\pi R_w^2 h_w) + (0.30\pi(R_s^2 - R_w^2)h_s)] * (0.0043)$$

where

R_s = Radius of sandpack in inches
R_w = Radius of well casing in inches
h_s = Height of sandpack in inches
h_w = Water depth in inches

0.0043 gal/in.^{3}
Assumed filter pack porosity = 30 percent.

Samples will always be collected in order of decreasing volatility (i.e., the samples to be analyzed for the volatile constituents should be collected first). Deliver the VOC sample to the vial by allowing the water to trickle down the inside wall of the vial at a rate no greater than approximately 100 ml/min. Other samples may be delivered at a faster rate. Sampling rates will at no time exceed 1 L/min. Procedures for each class of samples are contained in the site-specific Quality Assurance Project Plan.

When collecting samples for volatile analysis, care should be taken to prevent analyte loss by volatilization. The following procedures should be adhered to when collecting these samples:

- Avoid excessive aeration and agitation of sample.
- Fill vial so that a reverse meniscus is present by adjusting the flow rate from the sampling device.

- Place septum on vial so that the PTFE side is in contact with the sample. After the cap is on the bottle, check for air bubbles in the sample. If air bubbles are present, properly dispose of that sample and recollect the sample in the same vial.

- Make sure vial is labeled and immediately transfer the vial to the cooler with ice.

Filtered and unfiltered samples will be taken for inorganics (metals) analyses. The samples will be filtered through an in-line 0.45-µM filter (preferred method), or by gravity through a 0.45-µM membrane placed in a filter funnel. Use forceps to place the membrane into the funnel and pour sample through funnel until appropriate volumes have been filtered.

If necessary, due to slow filtering, a peristaltic pump may be used to filter the sample through an in-line filter. Connect the pump to the generator, attach tygon tubing to the bottom discharge valve on the bailer. Start pump and collect sample from the end of the in-line filter directly into the proper container, preserved, and placed in the cooler. Filtered samples will be preserved in the field with acid to a pH of less than 2. Make sure sample bottle is labeled and the cap is on tightly. Then place in cooler with ice immediately.

— OR —

If a low flow pump is used collect the samples, filtered samples will be taken by installing a 0.45-µM filter in-line and pumping the water through the filter. Collect sample from the end of the in-line filter directly into the proper container, preserved, and placed in the cooler. Filtered samples will be preserved in the field with acid to a pH of less than 2. Make sure sample bottle is labeled and the cap is on tightly. Then place in cooler with ice immediately.

Unfiltered samples will be collected by slowly pouring the sample water into the appropriate sample container, being careful not to agitate or cause bubbles to form. Do not overfill bottles. Make sure sample bottle is labeled and the cap is on tightly, then place the sample in cooler with ice immediately.

All samples will be delivered to the laboratory as soon as possible. If possible, samples will be shipped on the same day as they are collected. If samples must be retained due to weekend sampling (Friday through Sunday), the laboratory will be notified as to the time sensitive nature of the samples.

3.4 SAMPLING OF NON-AQUEOUS PHASE LIQUIDS

If NAPLs are detected in the well, a sample from all layers must be collected prior to any purging activities. NAPLs may be indicated by the presence of volatiles in the well headspace, and confirmed by the oil/water interface probe.

Collecting light non-aqueous phase liquid (LNAPL) will be accomplished using a transparent bailer with a double check valve. This bailer will be slowly lowered until the bottom of the bailer is 1-2 in. below the LNAPL-water interface, then slowly withdrawn. Verify that the interface was sampled by visual inspection of the bailer contents through the side of the bailer. Measure the thickness of the LNAPL in the bailer and note in the Field Logbook. Sample for laboratory analysis. An additional field verification may be performed by decanting the remainder of the contents of the bailer into a glass jar, adding a hydrophobic dye such as Sudan IV, or Redoil, shaking the sample and looking for coloration of NAPL. Alternate field tests are: examine the sample under ultraviolet light (many fluoresce), or allow the sample to stand overnight, and examine for interface and/or volatiles in the headspace the following day. Refer to following sections on purging and sample collection for setup and general operation.

Collecting dense non-aqueous phase liquids (DNAPLs) will be accomplished using a transparent bailer with a double check valve. The bailer must be lowered very slowly to the bottom of the well and raised slowly out of the well in a controlled fashion. Sample for analysis as above. The same field check described above may be employed for DNAPL. Refer to following sections on purging and sample collection for set up and general operation.

If NAPLs are present in the well, **and** a low-flow pump is to be used for purging and sampling, the well will be allowed to re-equilibrate prior to purging and sampling. This will be accomplished by allowing the well to stand undisturbed for at least 8 hours prior to purging and sample collection.

3.5 WELL PURGING GENERAL RULES

Water within the casing of a well will stagnate, degas, lose volatiles, possibly precipitate metals due to changes in redox potential, and may react with the screen and/or casing material. It is, therefore, necessary to purge a sufficient volume of this stagnant water from the well and/or casing to ensure that a representative sample of formation water can be obtained. Traditionally, the volume of water to be purged was arbitrarily set at 3-5 equivalent volumes. Recent advances in sampling technologies have caused a re-thinking of such arbitrary purge volumes. It is for this reason that monitoring of select chemical and physical properties of the sample medium will be used instead of strict volumes to determine when a representative sample may be taken from a well.

Acceptable purge/sampling devices include: bailers, high-discharge submersible pumps (purge only), and variable speed, low-flow pumps which include both submersible pumps (purge and sample) and dedicated bladder pumps (purge and sampling). It is recommended to purge and sample at similar rates with one type device per well. An acceptable exception to this general rule is to use a high-discharge submersible pump to purge a deep, fast-recharging well, and a bailer to sample the same well.

Peristaltic, gas-lift, and centrifugal pumps can cause volatilization, produce high pressure differentials, and can result in variability in the analysis of some analytes of interest.
These types of pumps will not be used to purge or sample wells.

To prevent groundwater from cascading down the sides of the screen into an open hole, thereby aerating the sample, purge rates will closely match recharge rates. If the static water level is within the casing, the initial purge rates may be set high enough to lower the water level to the top of the screen, then reduced to maintain that level.

Purging will be accomplished with either a submersible pump, a low-flow (submersible or bladder) pump, or bailer. The choice of bailer or pump will be based on depth to water table, volume to be purged, and permeability of the aquifer. If the well recharges rapidly and/or has greater than 20 gal (estimated EV) to be purged, water may be removed with a submersible pump or a low-flow pump. If the well recharges slowly and/or has less than 20 gal to be purged, water will be removed with a bailer or a low-flow pump.

Purging will be accomplished with as minimal disturbance to the surrounding formation as possible.

Purge water will be containerized onsite until analysis of samples is completed. Based on sample results, accumulated purge water will be properly disposed.

If the water level is within the screened interval and the well recharge rate is less than 0.1 L/min, purge the well using a low-flow pump as follows:

1. Draw the water down to within 1 ft of the top of the pump.

2. Allow the well to recover.

3. Check and record field parameters.

4. Repeat Steps 1 through 3 then collect samples for metals analysis only[4].

5. Note the event in the Field Logbook, and report the problem to the Project Manager. If this extremely low recharge problem consistently occurs in a given well, the well may be considered for re-development and/or replacement.

6. If adjacent wells have elevated VOC levels, additional soil gas surveys will be considered in the vicinity of the low recharge well to help determine the need for replacement.

3.6 PURGING AND SAMPLING WITH BAILERS

Bailers may be used for both purging and sampling wells if: (a) the well recharge rate is less than 4 L/min, (b) depth to the water table is less than 50 ft, and (c) less than 20 gal are to be purged (5 EV < 20 gal)[5].

4. Analyte losses due to volatilization in a drained well are too high for valid VOC sampling (McAlary and Barker 1987).

When purging with a bailer, either a polyvinyl chloride, PTFE, or stainless steel bailer may be used. The bailer will be attached to either a spool of PTFE-coated stainless steel cable or polypropylene rope. If using cable, attach it to the bailer using stainless steel cable clamps. Thoroughly decontaminate the cable after each use, prior to rewinding cable onto spool. Cable clamps and raw cable ends may serve to trap contamination. Exercise particular caution in decontaminating these areas. If using rope, attach the rope to the bailer using a bowline knot, dispense the needed length (a few feet more than the well depth) and cut the remainder away; then, at the end opposite the bailer, make a slip knot and place it around the well casing or protective posts to prevent losing the bailer and rope down the well. The polypropylene rope will be not reused; it will be properly disposed of. Either type of bailer will be repeatedly lowered gently into the well until it fills with water, removed, and the water will be discharged into an appropriate container until purging is complete. Care must be taken not to unduly agitate the water, as this tends to aerate the sample, increase turbidity, makes stabilization of required parameters difficult to achieve, and generally prolongs purging.

After purging 2 EV, obtain a sample of groundwater and measure the following stabilization parameters: temperature, conductivity, pH, turbidity, redox potential (Eh), and dissolved oxygen level at each successive half-well volume. When three of these stabilization parameters are in agreement within approximately 10 percent in three consecutive half-well volume samples, sufficient water has been purged from the well. The results of these tests should be recorded in the sampling logbook. Should these parameters not reach agreement, no more than five well volumes will be purged.

Immediately upon completion of purging, collect samples for laboratory analysis using a PTFE bailer on a PTFE-coated stainless steel cable. The bailer will be equipped with double check valve top and controlled flow bottom discharge attachments for VOC sampling (40-mL vials), and top discharge attachment for collecting larger samples (1-L bottles).

Slowly, so as not to agitate the water, lower the bailer into the well, using a spool of PTFE-coated cable. Allow bailer to fill, withdraw smoothly. Refill bailer as needed.

If the controlled flow bottom discharge attachment is used for VOC sampling, attach it to the bottom of the bailer. Using the stopcock valve on the bailer to control the flow, fill sample vials as described above in Section 3.3.

Remove check valve top and pour unfiltered sample into inorganics sample bottles.

Collect filtered samples as described in Section 3.3. Decontaminate bailer and cable.

5. These numbers are based on the following assumptions: (1) In purging, it is preferable to remove water at approximately the recharge rate; (2) 4 L/min is estimated as the approximate maximum rate at which water can be removed with a bailer from depths of 20-50 ft; and (3) 20 gal is estimated to be at the limit of the sampler's endurance, at which point fatigue and sloppiness of technique begin.

3.7 PURGING WITH PUMP, SAMPLING WITH BAILER

If the recharge rate of the well is greater than 30 L/min, or the water level is deeper than 50 ft, or more than 20 gal of purge water will be generated (5 EV > 20 gal), then purging and sampling may be accomplished using a submersible pump/bailer combination.

When purging with a pump, gradually lower the intake until it is submerged within the screened interval. Lower an electronic water level probe to the top of the screen (as determined from completion records) to the monitor water level, start pump, and slowly lower the pump as the water level continues to fall. Care should be exercised to lower the water column to the top of the screened interval (water level probe will stop beeping) but not below the top of the screen if possible. This will ensure that the stagnant layer has been removed, but should minimize the detrimental effects of over pumping the well. Secure hose(s) and/or power cord to casing and place discharge hose into the proper container, downhill and as far away from the well as possible. Determine and record the discharge rate.

Discharge rate = volume of container/time to fill container

The discharge rate will be established at approximately equal to or just greater than the well's recharge rate (determined from well development). If well development records are incomplete, recharge rate can be determined by monitoring the rise/fall of the water level within the casing as one purges the well. If the water level is static at a given pumping rate, but fluctuates up or down as pumping rate is decreased or increased, the pumping rate at which the water level is static is the recharge rate.

After purging 2 EV, obtain a sample of groundwater and measure the following stabilization parameters: temperature, conductivity, pH, turbidity, redox potential (Eh), and dissolved oxygen level at each successive half-well volume. When three of these stabilization parameters are in agreement within approximately 10 percent in three consecutive half-well volume samples, sufficient water has been purged from the well. The results of these tests should be recorded in the sampling logbook. Should these parameters not reach agreement, no more than five well volumes will be purged.

Immediately upon completion of purging, collect samples for laboratory analysis using a PTFE bailer on a PTFE-coated stainless steel cable. The bailer will be equipped with double check valve top and controlled flow bottom discharge attachments for VOC sampling (40-mL vials), and top discharge attachment for collecting larger samples (1-L bottles). Filtration of metals samples will be accomplished using either an in-line filter attached to the bottom of the bailer, or a funnel and appropriate filter (Section 3.3).

Slowly, so as not to agitate the water, lower the bailer into the well, using a spool of PTFE-coated cable. Allow bailer to fill, withdraw smoothly, fill sample containers as described in Section 3.6. Decontaminate bailer and cable in and decontaminate pump.

3.8 PURGING AND SAMPLING WITH LOW-FLOW PUMP

To obtain representative samples, subsurface disturbances should be kept to a minimum, thereby preventing sample alteration due to sampling actions. The reasoning behind the use of low-flow pumps to purge and sample monitoring wells is that these pumps minimize physical disturbance (turbulence) at the sampling point and chemical changes (aeration) in the medium. For these reasons, the low-flow pump is the preferred method for both purging and sampling in most cases. For the purposes of this SOP, "low-flow pumps" are defined as either dedicated bladder pumps or variable speed submersible pumps. Practical operational flow rates for these sampling devices range from 0.1 L/min to 30 L/min.

Low-flow pumps may be used for purging and sampling any well having recharge greater than 0.1 L/min, which is the practical lower limit of pump performance. Below that pumping rate, pump inefficiencies and/or overheating may alter the physical and chemical properties of the sample. If the pump is continuously operated at sampling rates higher than the well recharge rate, the water level will be lowered in the well, possibly allowing aeration of the sample which is unacceptable sampling procedure. Low-flow pumps are suitable for sampling wells with recharge rates lower than 0.1 L/min if precautions are taken to avoid aeration of the sample.

Low flow submersible pumps will be used as follows:

- Lower the pump into the well, slowly so as not to agitate the water, until the pump is at the mid-point of the screened interval or the mid-point of the water column if the static water table lies below the top of the screen[6]

- Attach the pump's umbilical cord (which will consist of power cord and sampling tubing) to the protective casing, or lock the cord spool so that the pump cannot move vertically in the well during sampling.

- Lower the water level probe into the well behind the pump until it just touches water. This will allow the sampler to monitor the water level while purging and sampling, and prevent the inadvertent drying of the well.

6. This assumes a 10-ft screened interval. If the screened interval is greater than 10 ft, multiple samples should be taken as follows:
   - If the screen is 10-12 ft, sample the canter of the water column, as outlined above.
   - If the screen is longer than 12 ft, and the water column is 10 ft or less, sample the center of the water column.
   - If the screen is longer than 12 ft, and the water column fills the screen, or extends above the screen, sample at 1/3 and 2/3 the height of the water column, or about every 6 ft.

- Begin purging at the pump's lowest setting, then gradually increase rate[7] until the pumping rate matches the aquifer recharge rate. **If the water level is above the top of the screen**, the pumping rate may be allowed to slightly exceed recharge rate, lowering the water level to no less than 1 ft above the screen, then reduced until it matches recharge rate and purging continued. **If the water level is below the top of the screen**, always keep the purge rate lower than well's recharge rate.

- Monitor stabilization parameters listed in Section 3.6 beginning immediately, using an in-line monitoring system. Record parameters regularly, at a rate of one set of parameters per each 1-3 liters of water removed from the well. When these parameters stabilize to within 10 percent over three consecutive readings, reduce[8] flow rate to 0.1 L/min (if needed) and begin collecting VOC samples directly from the discharge line.

- If the well recharges at a rate less than 0.1 L/min, purge until the water level is even with the top of the screen, allow the well to recover, and sample immediately.

- Remove and decontaminate water level probe and pump.

4. MAINTENANCE

Refer to manufacturer's requirements for maintenance of pumps and generators.

5. PRECAUTIONS

Refer to the site-specific Health and Safety Plan for appropriate personal protective equipment.

6. REFERENCES

Garske, E.E. and M.R. Schock. 1986. An Inexpensive Flow-Through Cell and Measurement System for Monitoring Selected Chemical Parameters in Groundwater.

Gass, T.E., J.F. Barker, R. Dickhout, and J.S. Fyfe. 1991. Test Results of the Grundfos Groundwater Sampling Pump, in Proceedings of the Fifth National Symposium on Aquifer Restoration and Groundwater Monitoring.

7. Some sources indicate that the pumping rate should not exceed 1 L/min, with 0.5 L/min being preferable. The optimal purge rate is highly aquifer dependent, and may range from less than 0.5 L/min to greater than 10 L/min. The purge rate for a given well will, therefore, be a field decision, based on well development, purge, and sampling records rather than SOP mandate.
8. Sampling should occur at the same rate as purging as long as aeration of sample does not occur.

McAlary, T. A. and J.F. Barker. 1987. Volatilization Losses of Organics During Groundwater Sampling From Low Permeability Materials, in Groundwater Monitoring Review. Fall.

Puls, R.W. and R.M. Powell. 1992. Acquisition of Representative Groundwater Quality Samples for Metals, in Groundwater Monitoring Review. Summer.

Puls, R.W., J.H. Eychaner, and R.M. Powell. 1990. Colloidal-Facilitated Transport of Organic Contaminants in Groundwater: Part I. Sampling Considerations, in EPA Environmental Research Brief. EPA/600/M-90/023. December.

Puls, R.W., R.M. Powell, D.A. Clark, and C.J. Paul. 1991. Facilitated Transport of Inorganic Contaminants in Groundwater: Part II Colloidal Transport, in EPA Environmental Research Brief. EPA/600/M-91/040. July.

Puls, R.W., R.M. Powell, B. Bledsoe, D.A. Clark, and C.J. Paul. 1992. Metals in Groundwater: Sampling Artifacts and Reproducibility, in Hazardous Waste & Hazardous Materials. Volume 9, No. 2.

Standard Operating Procedure No. 016
for
Surface Water, Groundwater, and Soil/Sediment Field Logbooks

Prepared by

EA Engineering, Science, and Technology, Inc.
11019 McCormick Road
Hunt Valley, Maryland 21031

Revision 0
August 2007

CONTENTS

Page

1. SCOPE AND APPLICATION 1

2. MATERIALS 1

3. PROCEDURE 1

3.1 Soil/Sediment Logbook 1

3.1.1 Field Parameter Form 1
3.1.2 Map File Form 3

3.2 Surface Water Logbook 4

3.2.1 Field Parameter Form 4

3.3 Groundwater Sampling Logbook 4

3.3.1 Field Parameter Form 4

3.4 Field Calibration Forms 7

3.4.1 Items on Figure SOP016-5 7

3.5 Groundwater Hydrology Tests Logbook 7

3.5.1 Field Permeability Test Data Sheet 7
3.5.2 Groundwater Levels – Single Well 9
3.5.3 Groundwater Levels – Single Well 10

3.6 Groundwater Levels – Multiple Wells 13
3.7 Groundwater Levels – Dataloggers 14

4. MAINTENANCE 16

5. PRECAUTIONS 16

6. REFERENCES 16

1. SCOPE AND APPLICATION

The purpose of this Standard Operating Procedure (SOP) is to delineate protocols for recording surface water, groundwater, soil/sediment sampling information, instrument calibration data, and data from hydrologic testing in the field logbooks. Acceptable field logbooks are: bound, unprinted books such as a surveyor's field book, or a federal supply service No. 7530-00-222-3525 record book (or equivalent); or they may be company-proprietary, pre-printed forms bound into a field logbook. Example forms are provided herein. Alternate, equivalent forms are acceptable.

2. MATERIALS

The following material may be required: applicable field logbook and indelible ink pen.

3. PROCEDURE

Information pertinent to soil/sediment, groundwater, or surface water sampling will be recorded in the appropriate logbook. Each page/form of the logbook will be consecutively numbered. Entries will be made in indelible ink. Corrections will consist of line-out deletions that are initialed and dated. If using carbon paper or self-duplicating forms, before entering data in logbook, insert a sheet protector between form sets to isolate first blank form from remaining forms.

3.1 SOIL/SEDIMENT LOGBOOK (Requires Figures SOP016-1 and SOP016-3)

3.1.1 Field Parameter Form (Items on Figures SOP016-1 and SOP016-2)

1. HIGH CONCENTRATION EXPECTED?: Answer "Yes" or "No."

2. HIGH HAZARD?: Answer "Yes" or "No."

3. SITE: Record the complete name of the site.

4. AREA: Record the area designation of the sample site.

5. INST CODE: Record the 2-letter installation code appropriate for the installation or site. Correct abbreviations can be found on Pages 3-6 of the IRDMS User's Guide for chemical data entry.

6. FILE NAME: Record "CSO" for a soil sample or "CSE" for a sediment sample.

7. SITE TYPE: Record the abbreviation appropriate for where the sample was taken. Correct abbreviations can be found on Pages 18-21 of the IRDMS User's Guide for chemical data entry. This entry must match the Site Type on the map file form.

8. SITE ID: Record a code up to 10 characters or numbers which is unique to the site.

9. FIELD SAMPLE NUMBER: Record a code specific for the sample.

10. DATE: Enter the date the sample was taken.

11. TIME: Enter the time (12-hour or 24-hour clock acceptable as long as internally consistent) the sample was taken.

12. AM PM: Circle "AM" or "PM" to designate morning or afternoon (12-hour clock).

13. SAMPLE PROG: Record "GQA" (Groundwater Quality Assessment) or other appropriate sample program.

14. DEPTH (TOP): Record the total depth sampled.

15. DEPTH INTERVAL: Record the intervals at which the plug will be sampled.

16. UNITS: Record the units of depth (feet, meters)

17. SAMPLE MEASUREMENTS: Check the appropriate sampling method.

18. CHK: Check off each container released to a laboratory.

19. ANALYSIS: Record the type of analysis to be performed on each sample container.

20. SAMPLE CONTAINER: Record the sample container type and size.

21. NO.: Record the number of containers.

22. REMARKS: Record any remarks about the sample

23. TOTAL NUMBER OF CONTAINERS FOR SAMPLE: Record the total number of containers.

24. SITE DESCRIPTION: Describe the location where the sample was collected.

25. SAMPLE FORM: Record the form of the sample (i.e., clay, loam, etc.) using The Unified Soil Classification System.

26. COLOR: Record the color of the sample as determined from standard Munsell Color Charts.

27. ODOR: Record the odor of the sample or "none." See SOP No. 001 Section 5.

28. PID (HNu): Record the measured PID (HNu) values.

29. UNUSUAL FEATURES: Record anything unusual about the site or sample.

30. WEATHER/TEMPERATURE: Record the weather and temperature.

31. SAMPLER: Record your name.

3.1.2 Map File Form (Figure SOP016-3)

1. The map file logbook form will be located on the reverse of the field parameter logbook form, or on an adjoining page of the field logbook (if level book is used).

2. SITE ID: Record the Site ID from the field parameter form.

3. POINTER: Record the field sample number for the sample being pointed to.

4. DESCRIPTION/MEASUREMENTS: Describe the location where the sample was taken, along with distances to landmarks.

5. SKETCH/DIMENSIONS: Diagram the surroundings and record the distances to landmarks.

6. MAP REFERENCE: Record which U.S. Geological Survey Quad Map references the site.

7. COORDINATE DEFINITION: Write the compass directions the X- and Y-Coordinates of the map run.

8. COORDINATE SYSTEM: Write “UTM” (Universal Transverse Mercator).

9. SOURCE: Record the 1-digit code representing the Map Reference.

10. ACCURACY: Give units (e.g., write “1-M” for 1 meter).

11. X-COORDINATE: Record the X-Coordinate of the sample site location.

12. Y-COORDINATE: Record the Y-Coordinate of the sample site location.

13. UNITS: Record the units map sections are measured in.

14. ELEVATION REFERENCE: Record whether topography was determined from a map or a topographical survey.

15. ELEVATION SOURCE: Record the 1-digit code representing the elevation reference.

16. ACCURACY: Record the accuracy of the map or survey providing the topographical information.

17. ELEVATION: Record the elevation of the sampling site.

18. UNITS: Write the units in which the elevation is recorded.

19. SAMPLER: Write your name.

3.2 SURFACE WATER LOGBOOK (Requires Figures SOP016-2 and SOP016-3)

3.2.1 Field Parameter Form (Items Unique to Figure SOP016-3)

1. CAL REF: Record the calibration reference for the pH meter.

2. pH: Record the pH of the sample.

3. TEMP: Record the temperature of the sample in degrees Celsius.

4. COND: Record the conductivity of the water.

5. For all other sections, see Section 3.2.1.

3.3 GROUNDWATER SAMPLING LOGBOOK (Requires Figures SOP016-2, SOP016-3, and SOP016-4)

3.3.1 Field Parameter Form (Items on Figure SOP016-4)

1. WELL NO. OR ID: Record the abbreviation appropriate for where the sample was taken. Correct abbreviations can be found on Pages 18-21 of the IRDMS User's Guide for chemical data entry.

2. SAMPLE NO.: Record the reference number of the sample.

3. WELL/SITE DESCRIPTION: Describe the location where the sample was taken, along with distances to landmarks.

4. X-COORD and Y-COORD: Record the survey coordinates for the sampling site.

5. ELEV: Record the elevation where the sample was taken.

6. UNITS: Record the units the elevation was recorded in.

7. DATE: Record the date in the form MM/DD/YY.

8. TIME: Record the time, including a designation of AM or PM.

9. AIR TEMP.: Record the air temperature, including a designation of C or F (Celsius or Fahrenheit).

10. WELL DEPTH: Record the depth of the well in feet and inches.

11. CASING HT.: Record the height of the casing in feet and inches.

12. WATER DEPTH: Record the depth (underground) of the water in feet and inches.

13. WELL DIAMETER: Record the diameter of the well in inches.

14. WATER COLUMN HEIGHT: Record the height of the water column in feet and inches.

15. SANDPACK DIAM.: Record the diameter of the sandpack. Generally, this will be the same as the bore diameter.

16. EQUIVALENT VOLUME OF STANDING WATER: Use one of the following equations, to determine one equivalent volume (EV):

1 EV = Volume in casing + volume in saturated sand pack. Or to restate:

$$1\ EV = (BR_w^2 h_w + 0.30B(R_s^2 - R_w^2)h_s) * (0.0043)$$

where

R_s = Radius of sandpack in inches
R_w = Radius of well casing in inches
h_s = Height of sandpack in inches
h_w = Water depth in inches

0.0043 = gal/in.^{3}
and filter pack porosity is assumed as 30 percent

— OR —

$$\text{Volume in casing} = (0.0043\ \text{gal/in.}^3)(B)(12\ \text{in./ft})(R_c^2)(W_h)$$

where

R_c = Radius of casing in inches
W_h = Water column height in feet

$$\text{Vol. in sandpack} = (0.0043\ \text{gal/in.}^3)(B)(12\ \text{in./ft})(R_b^2 - R_c^2)(W_h)(0.30)$$

(if W_h is less than the length of the sandpack),

— PLUS —

Vol. in sandpack = $(0.0043\ gal/in.^3)(B)(12\ in./ft)(R_b^2 - R_c^2)(S_h)(0.30)$

(if W_h is greater than the length of the sandpack).

where
R_b = Radius of the borehole
S_h = Length of the sandpack.

Show this calculation in the comments section.

17. VOLUME OF BAILER OR PUMP RATE: Record bailer volume or pump rate.

18. TOTAL NUMBER OF BAILERS OR PUMP TIME: Record the number of bailers required to remove 3 equivalent volumes (EV) of water from the well or the total purge time and volume as applicable.

19. WELL WENT DRY? Write “YES” OR “NO.”

20. NUMBER OF BAILERS OR PUMP TIME: Record the number of bailers or pump time which made the well go dry.

21. VOLUME REMOVED: Record the volume of water (gal) removed before the well went dry.

22. RECOVERY TIME: Record the time required for the well to refill.

23. PURGE AGAIN?: Answer “YES” or “NO.”

24. TOTAL VOL. REMOVED: Record the total volume of water (in gal) removed from the well.

25. CAL REF.: Record the calibration reference for the pH meter.

26. TIME: Record time started (INITIAL T[0]), 2 times DURING the sampling and the time sampling ended (FINAL).

27. pH: Record the pH at start of sampling (INITIAL), twice DURING the sampling and at the end of sampling (FINAL).

28. TEMP: Record the water temperature (Celsius) at the start of sampling, twice DURING the sampling and at the end of sampling (FINAL).

29. COND: Record the conductivity of the water at the start of sampling, twice DURING the sampling and at the end of sampling (FINAL).

30. D.O.: Record the dissolved oxygen level in the water at the start of sampling, twice DURING the sampling and at the end of sampling (FINAL).

31. TURBIDITY: Record the readings from the turbidity meter (nephelometer) and units at the start of sampling, twice DURING the sampling and at the end of sampling (FINAL).

32. ORD: Record the oxidation/reduction (RedOx) potential of the water sample at the start of sampling, twice DURING the sampling and at the end of sampling (FINAL).

33. HEAD SPACE: Record any positive readings from organic vapor meter reading taken in well headspace prior to sampling.

34. NAPL: Record the presence and thickness of any non-aqueous phase liquids (light or dense)

35. COMMENTS: Record any pertinent information not already covered in the form.

36. SIGNATURE: Sign the form.

3.4 FIELD CALIBRATION FORMS (Maintained as a separate logbook, or incorporated into sampling logbooks)

3.4.1 Items on Figure SOP016-5

1. Record time and date of calibration. Note whether 12- or 24-hour clock was used.

2. Record calibration standard reference number.

3. Record meter I.D. number

4. Record initial instrument reading, recalibration reading (if necessary), and final calibration reading on appropriate line.

5. Record value of reference standard (as required).

6. COMMENTS: Record any pertinent information not already covered on form.

7. SIGNATURE: Sign form.

3.5 GROUNDWATER HYDROLOGY TESTS LOGBOOK (Must include Figures SOP016-6 and SOP016-7 and/or SOP016-8, OR SOP016-9 or SOP016-10)

3.5.1 Field Permeability Test Data Sheet (Items on Figures SOP016-6)

1. CONTRACTOR: Organization performing the test.

2. SEQ. #: Enter page number of this set of forms (page # of #).

3. PROJECT NAME: Record the name assigned by the contractor's organization to the project.

4. PROJECT NO.: Record the contractor assigned project number or the contract number.

5. LOCATION: Specific location

6. CLIENT: Agency or company with the contract under which the work is being performed.

7. FIELD PARTY CHIEF: Printed name of the person responsible for this particular field test.

8. WELL #: Record the well number as it appears on the well completion tag, affixed to the protector casing or well completion records.

9. TEST TYPE: Short description of the type of test to be performed.

10. RISING/FALLING HEAD WITH SLUG: Check if the test involved the insertion/removal of and inert object.

11. RISING/FALLING HEAD WITHOUT SLUG: Check if the test involved the addition/removal of a quantity of water.

12. START DATE: Date on which the test was begun.

13. CLOCK TIME: Time each datum (depth to groundwater level) is collected. Note whether 12- or 24-hour clock was used.

14. ELAPSED TIME: Time since the last datum was collected.

15. DEPTH TO GWL (ft): Depth to the top of the groundwater table (Groundwater Level) as measured by manual methods.

16. REC. (ft): Water level as reported by transducer/datalogger (this is the depth of water above the transducer.

17. TIME: Time the discharge rate check was begun (addition or removal of water method). Note whether 12- or 24-hour clock was used.

18. FLOW METER (Addition or removal of water method): The amount of water added or removed as registered by the flowmeter, in gal of liters.

19. DISCHARGE RATE: Flowmeter reading divided by time interval (gal/min or liters/min).

20. SIGNATURE: The person completing this form must sign the form at the end of the test.

21. DATE: Date the form was signed.

3.5.2 Groundwater Levels – Single Well (Items on Figure SOP016-7)

1. CONTRACTOR: Organization performing the test.

2. SEQ. #: Enter page number of this set of forms (page # of #).

3. PROJECT NO.: Record the contractor assigned project number or the contract number.

4. WELL #: Record the well number as it appears on the well completion tag, affixed to the protector casing or well completion records.

5. PROJECT NAME: Record the name assigned by the contractor's organization to the project.

6. LOCATION: Specific location.

7. FIELD PARTY CHIEF: Printed name of the person responsible for this particular field test.

8. CLIENT: Agency with the contract under which the work is being performed.

Well Data

9. STICKUP: Enter the length of well casing extending above the average ground surface at the base of the protective casing.

10. MEASURED UP(+)/DOWN(-) FROM: Describe the starting point for the previous measurement.

11. MP ELEVATION: Enter the elevation of the measuring point here. NOTE: This datum may require reference to tables and/or maps and may be added after completing the day's field work.

12. DATUM = MSL OR: Is the datum for the previous elevation Mean Sea Level? If not, what? Also tell whether it was derived from a map elevation (write "MAP") or survey data (write "SURVEY").

13. MEASURING POINT DESCRIPTION: Describe the point used as the origin for all down-hole (water table) measurements. NOTE: Remedial investigation wells are required to have a permanently marked reference (measuring) point (refer to SOP No. 019).

14. REMARKS: Record any pertinent observations about the site/well conditions not specifically required in the preceding.

15. DATE: Date of each water level reading

16. TIME: Time of each water level reading. Note whether 12- or 24-hour clock was used.

17. ELAPSED TIME: Time since test was begun.

18. DEPTH TO WATER: Measured depth to the groundwater table.

19. WATER ELEVATION: Elevation of the top of the groundwater table (use datum listed above).

20. MEAS. METH.: Method used to measure the water level in the well (see abbreviation key at the bottom of the data sheet).

21. TAPE NO.: The unique identification number of the traceable standard tape used to calibrate the measuring device.

22. WELL STATUS: Condition of the well at the time of measuring (see abbreviation key at the bottom of the data sheet).

23. REMARKS: Any additional pertinent comments not specifically required above.

24. INITIALS: Initials of person completing this data entry.

25. ABBREVIATION KEYS: Self explanatory.

26. SIGNATURE: The person completing this form must sign the form at the end of the test.

27. DATE: Date the form was signed.

3.5.3 Groundwater Levels – Single Well (Items on Figure SOP016-8)

1. CONTRACTOR: Organization performing the test.

2. SEQ. #: Enter page number of this set of forms (page # of #).

3. PROJECT NO.: Record the contractor assigned project number or the contract number.

4. WELL #: Record the well number as it appears on the well completion tag, affixed to the protector casing or well completion records.

5. PROJECT NAME: Record the name assigned by the contractor's organization to the project.

6. LOCATION: Specific location.

7. FIELD PARTY CHIEF: Printed name of the person responsible for this particular field test.

8. CLIENT: Agency with the contract under which the work is being performed.

WELL DATA

9. STICKUP: Enter the length of well casing extending above the average ground surface at the base of the protective casing.

10. MEASURED UP(+)/DOWN(-) FROM: Describe the starting point for the previous measurement.

11. MP ELEVATION: Enter the elevation of the measuring point here. NOTE: This datum may require reference to tables and/or maps and may be added after completing the day's field work.

12. DATUM = MSL OR: Is the datum for the previous elevation Mean Sea Level? If not, what? Also tell whether it was derived from a map elevation (write "MAP") or survey data (write "SURVEY").

13. MEASURING POINT DESCRIPTION: Describe the point used as the origin for all down-hole (water table) measurements. NOTE: All Rhode Island wells are required to have a permanently marked reference (measuring) point (refer to SOP No. 019).

14. REMARKS: Record any pertinent observations about the site/well conditions not specifically required in the preceding.

15. DATALOGGER: This section is record of pertinent datalogger information.

16. MANUFACTURER: Record the manufacturer/brand name as stated on the datalogger.

17. MODEL: Enter the model number of the datalogger.

18. S/N: Enter the serial number of this datalogger.

19. TAG PROGRAMMED IN LOGGER: What is the identifier used in the datalogger's program to indicate that this unit was used to record a given data set?

20. TRANSDUCER: This section is a listing of pertinent information about the transducer used.

21. MANUFACTURER: Record the manufacturer/brand name as stated on the transducer.

22. MODEL: Enter the model number of the transducer.

23. S/N: Enter the serial number of this transducer.

24. INPUT/UNITS: What are the units this transducer uses?

25. RANGE: Record the pressure or depth range over which this transducer is certified.

CALIBRATION

26. PRESSURE RATING: This is taken from the manufacturer's specifications for a given transducer. (Usually in psi, or kpa).

27. "SUBMERGENCE = ___ (V) / (MV)": Record the voltage returned by the transducer at a given depth of submergence. Indicate whether the reading is in volts (v), or millivolts (mv).

28. VOLUME WATER ADDED/REMOVED: (Applicable if inert object insertion/removal method was not employed.) Record the volume of water added to or removed from the well.

29. DISCHARGE RATE: If z (above) is filled, enter the rate at which this water was added or removed.

30. INITIAL WATER LEVEL (ft): Enter the water level in the well at the beginning of the test.

31. PRESSURE TRANSDUCER SUBMERGENCE: Record the depth to which the transducer is submerged at the beginning of the test and the depth to the transducer at the end if the test. All depths will be recorded to the nearest 0.01 ft.

32. TIME: Record the time the test is begun and ended. Note whether 12- or 24-hour clock was used.

33. OBSERVED CHANGES IN ADJACENT WELLS: Note any changes in water levels in nearby wells.

34. RESULTS RECORDED ON DISKETTE #: Tracking number of the diskette on which these data are archived.

35. DISKETTE FILE NAME: Name of the file(s).

36. SIGNATURE: The person completing this form must sign the form at the end of the test

37. DATE: Date the form was signed.

3.6 GROUNDWATER LEVELS – MULTIPLE WELLS (Items on Figure SOP016-9)

1. CONTRACTOR: Organization performing the test.

2. SEQ. #: Enter page number of this set of forms (page # of #).

3. PROJECT NO.: Record the contractor assigned project number or the contract number.

4. PROJECT NAME: Record the name assigned by the contractor's organization to the project.

5. LOCATION: Specific location.

6. FIELD PARTY CHIEF: Printed name of the person responsible for this particular field test.

7. CLIENT: Agency with the contract under which the work is being performed.

8. REMARKS: Any pertinent observations not specifically required above.

9. WELL: Record the well number as it appears on the well completion tag, affixed to the protector casing or well completion records.

10. DATE: Date this measurement was made.

11. TIME: Time this measurement was made. Note whether 12- or 24-hour clock was used.

12. DEPTH TO WATER: Depth from MP to top of groundwater table.

13. STICKUP: Enter the length of well casing extending above the average ground surface at the base of the protective casing.

14. MP ELEV.: Enter the elevation of the measuring point here. NOTE: This datum may require reference to tables and/or maps and may be added after completing the day's field work.

15. MEAS. METH.: Method used to measure the water level in the well (see abbreviation key at the bottom of the data sheet).

16. REMARKS/MP: Describe the location and nature of the measuring point.

17. INITIALS: Initials of the person completing this form.

18. ABBREVIATION KEYS: Self explanatory.

19. SIGNATURE: The person completing this form must sign the form at the end of the test.

20. DATE: Date the form was signed.

3.7 GROUNDWATER LEVELS – DATALOGGERS (Items on Figure SOP016-10)

1. CONTRACTOR: Organization performing the test.

2. SEQ. #: Enter page number of this set of forms (page # of #).

3. PROJECT NO.: Record the contractor assigned project number or the contract number.

4. WELL #: Record the well number as it appears on the well completion tag, affixed to the protector casing or well completion records.

5. PROJECT NAME: Record the name assigned by the contractor's organization to the project.

6. LOCATION: Specific location.

7. FIELD PARTY CHIEF: Printed name of the person responsible for this particular field test.

8. CLIENT: Agency with the contract under which the work is being performed.

WELL DATA

9. STICKUP: Enter the length of well casing extending above the average ground surface at the base of the protective casing.

10. MEASURED UP(+)/DOWN(-) FROM: Describe the starting point for the previous measurement.

11. MP ELEVATION: Enter the elevation of the measuring point here. NOTE: This datum may require reference to tables and/or maps and may be added after completing the day's field work.

12. DATUM = MSL OR: Is the datum for the previous elevation Mean Sea Level? If not, what? Also tell whether it was derived from a map elevation (write "MAP") or survey data (write "SURVEY").

13. MEASURING POINT DESCRIPTION: Describe the point used as the origin for all down-hole (water table) measurements. NOTE: All Rhode Island wells are required to have a permanently marked reference (measuring) point (refer to SOP No. 019, Section 3.4).

14. REMARKS: Record any pertinent observations about the site/well conditions not specifically required in the preceding.

DATALOGGER (This section is a record of pertinent datalogger information)

15. MANUFACTURER: Record the manufacturer/brand name as stated on the datalogger.

16. MODEL: Enter the model number of the datalogger.

17. S/N: Enter the serial number of this datalogger.

18. TAG PROGRAMMED IN LOGGER: What is the identifier used in the datalogger's program to indicate that this unit was used to record a given data set?

TRANSDUCER (This section is a listing of pertinent information about the transducer used)

19. MANUFACTURER: Record the manufacturer/brand name as stated on the transducer.

20. MODEL: Enter the model number of the transducer.

21. S/N: Enter the serial number of this transducer.

22. INPUT/UNITS: What are the units this transducer uses?

23. RANGE: Record the pressure or depth range over which this transducer is certified.

CALIBRATION

24. PRESSURE RATING: This is taken from the manufacturer's specifications for a given transducer (usually in psi, or kpa).

25. "SUBMERGENCE = ___ (V) / (MV)": Record the voltage returned by the transducer at a given depth of submergence. Indicate whether the reading is in volts (v), or millivolts (mv).

26. DATE: Date of each water level reading

27. TIME: Time of each water level reading. Note whether 12- or 24-hour clock was used.

28. LOGGING TIME INTERVAL: Time since test was begun.

29. WL FEET BELOW MP: Measured depth to the groundwater table from measuring point.

30. SUBMERGENCE: Depth of water above the transducer.

31. MEAS.METHOD: What device/method was used to measure the water level.

32. TAPE NO.: Record the tape identification number.

33. TRANSDUCER MOVED?: Was the transducer moved since the last water level reading?

34. REMARKS: Any pertinent remarks not otherwise specified.

35. INITIALS:

DATA TRANSFER TO DISKETTE:

36. DATE: Date data were archived onto diskette.

37. TIME: Time stamp the computer assigns the data file.

38. FILE NAME: Name assigned the data file.

39. SOFTWARE USED FOR TRANSFER: Any special software, or computer operating system used to write the files to diskette. NOTE: If a "shareware" archiver which compresses files was used, and the archived file is not self-extracting, a copy of the unarchive program should be copied onto the diskette also.

40. OUTPUT FORMAT: What is the format of the output file? (DOS, UNIX, Binary, Compressed?)

41. INITIALS: Initials of the person who copied the data to diskette.

42. ABBREVIATION KEY: Self-explanatory.

4. MAINTENANCE

Not applicable.

5. PRECAUTIONS

None.

6. REFERENCES

U.S. Environmental Protection Agency. 1984. User's Guide to the Contract Laboratory Program. July.

FIGURE SOP016-1
FIELD PARAMETER LOGBOOK
SOIL AND SEDIMENT SAMPLES

HIGH CONCENTRATION EXPECTED? HIGH HAZARD?

INSTALLATION/SITE _____ AREA _____

INST CODE FILE NAME _____

SITE TYPE SITE ID
FIELD SAMPLE NUMBER

DATE (MM/DD/YY) / / TIME AM PM SAMPLE PROG.

DEPTH (TOP) DEPTH INTERVAL UNIT _____

SAMPLING METHOD:

SPLIT SPOON AUGER SHELBY TUBE SCOOP OTHER

CHK	ANALYSIS	SAMPLE CONTAINER	NO.	REMARKS

TOTAL NUMBER OF CONTAINERS FOR SAMPLE

DESCRIPTION OF SITE AND SAMPLE CONDITIONS
SITE DESCRIPTION:_____
SAMPLE FORM _____ COLOR _____ ODOR _____
PID (HNu) _____ UNUSUAL FEATURES _____
_____
WEATHER/TEMPERATURE
SAMPLER

HIGH CONCENTRATION EXPECTED? HIGH HAZARD?

FIGURE SOP016-2
FIELD PARAMETER LOGBOOK
GROUNDWATER AND SURFACE WATER SAMPLES

INSTALLATION/SITE AREA
INST CODE FILE NAME SITE TYPE
SITE ID FIELD SAMPLE NUMBER
DATE (MM/DD/YY) / / TIME AM PM SAMPLE PROG.
DEPTH (TOP) DEPTH INTERVAL UNITS

SAMPLING MEASUREMENTS

CAL REF.	pH	TEMPERATURE C	CONDUCTIVITY	OTHER

CHK	ANALYSIS	SAMPLE CONTAINER	NO.	REMARKS

TOTAL NUMBER OF CONTAINERS FOR SAMPLE

DESCRIPTION OF SITE AND SAMPLE CONDITIONS

SITE DESCRIPTION
SAMPLING METHOD
SAMPLE FORM COLOR ODOR
PID (HNu)
UNUSUAL FEATURES
WEATHER/TEMPERATURE _____ SAMPLER _____

FIGURE SOP016-3
MAP FILE LOGBOOK

SITE ID POINTER _____
DESCRIPTION/MEASUREMENTS
SKETCH/DIMENSIONS:

MAP REFERENCE
COORDINATE DEFINITION (X is Y is)
COORDINATE SYSTEM SOURCE ACCURACY
X-COORDINATE Y-COORDINATE UNITS
ELEVATION REFERENCE
ELEVATION SOURCE ACCURACY ELEVATION
UNITS

SAMPLER

FIGURE SOP016-4
MAP FILE AND PURGING LOGBOOK
GROUNDWATER SAMPLES

WELL COORD. OR ID SAMPLE NO._____
WELL/SITE
DESCRIPTION_____
_____
X-COORD. Y-COORD. _____ ELEV. UNITS
DATE ____/____/____ TIME AIR TEMP.

WELL DEPTH _____ ft _____ in. CASING HT. _____ ft _____ in.
WATER DEPTH _____ ft _____ in. WELL DIAMETER _____ in.
WATER COLUMN HEIGHT _____ ft _____ in. SANDPACK DIAM. _____ in.
EQUIVALENT VOLUME OF STANDING WATER _____ (gal) (L)
VOLUME OF BAILER _____ (gal) (L) or PUMP RATE _____ (gpm) (lpm)
TOTAL NO. OF BAILERS (5 EV)_____ or PUMP TIME _____ MIN.
WELL WENT DRY? [Yes] [No] NUM. OF BAILERS _____ or PUMP TIME_____MIN
VOL. REMOVED _____ (gal) (L) RECOVERY TIME _____ MIN
PURGE AGAIN? [Yes] [No] TOTAL VOL. REMOVED _____ (gal) (L)

Date and Time	Quantity Removed	Time Required	pH	Cond	Temp	ORD	Turb	DO	Character of water (color/ clarity/odor/partic.)
(before)									
(during)									
(during)									
(during									
(after)									

COMMENTS:_____
_____
_____
_____

_____
SIGNATURE

FIGURE SOP016-5
FIELD CALIBRATION: pH, CONDUCTIVITY, TEMPERATURE, TURBIDITY, OXIDATION-REDUCTION POTENTIAL, AND DISSOLVED OXYGEN METERS

INITIAL CALIBRATION	FINAL CALIBRATION
DATE:	DATE:
TIME:	TIME:

pH METER CALIBRATION

CALIBRATION STANDARD REFERENCE NO: _____

METER ID _____

pH STANDARD	INITIAL READING	RECALIB. READING	FINAL READING
7.0			
10.0			
4.0			

CONDUCTIVITY METER CALIBRATION

CALIBRATION STANDARD REFERENCE NO: _____

METER ID _____

COND. STANDARD	INITIAL READING	RECALIB. READING	FINAL READING

TEMPERATURE METER CALIBRATION

METER ID _____

TEMP. STANDARD	INITIAL READING	RECALIB. READING	FINAL READING
ICE WATER			
BOILING WATER			
OTHER			

FIGURE SOP016-5 *(continued)*

TURBIDITY METER CALIBRATION

CALIBRATION STANDARD REFERENCE NO: _____

METER ID _____

STANDARD	INITIAL READING	RECALIB. READING	FINAL READING

ORD METER CALIBRATION

CALIBRATION STANDARD REFERENCE NO: _____

METER ID _____

STANDARD	INITIAL READING	RECALIB. READING	FINAL READING

DISSOLVED OXYGEN METER CALIBRATION

CALIBRATION STANDARD REFERENCE NO: _____

METER ID _____

STANDARD	INITIAL READING	RECALIB. READING	FINAL READING

COMMENTS:_____

_____

_____

_____

_____

SIGNATURE

FIGURE SOP016-6
FIELD PERMEABILITY TEST DATA SHEET

Contractor: **Seq. #** /

Project Name:	Project #:
Location:	Client:
Party Chief:	Contractor:
Observation Well:	
Test Type: Rising/Falling Head w/Slug	Rising/Falling Head w/out Slug
Start Date:	

								Discharge Rate		
Clock Time	Elapsed Time (min)	Depth to GWL (ft)	Rec (ft)	Clock Time	Elapsed Time	Depth to GWL (ft)	Rec (ft)	Time	Flow Meter	Discharge Rate

Signature: _____ **Date:** _____

FIGURE SOP016-7
GROUNDWATER LEVELS – SINGLE WELL

Contractor: **Seq. #** /

Project No.:
Project Name:
Field Party Chief:

WELL DATA:

Stickup: (ft)
MP Elevation:
Area:

Datum = MSL or:

Measuring Point Description:

Datalogger:
Manufacturer: Model: S/N:
Tag No. Programmed in Logger:

Transducer: Manufacturer: Model: S/N:
Input/Units: Range:

Calibration:
Pressure Rating:
0 ft submergence = (v) / (mv) ft submergence = (v) / (mv)

Volume Water Added/Removed:
Discharge Rate:
Initial Water Level (ft):

Pressure Transducer Submergence
Initial (ft): Final(ft): Time:Start: End:
Observed Changes in Adjacent Wells:

Results Recorded on Diskette #:
Diskette File Name:

Signature: _____ Date: _____

FIGURE SOP016-8
GROUNDWATER LEVELS – MULTIPLE WELLS

Contractor: **Seq. #** /

Project No.:
Project Name:
Field Party Chief:

WELL DATA:

Stickup: (ft)
MP Elevation:

Measuring Point Description:
Remarks:
Well No.:
up (+)/down (-) from:
Datum = MSL or:

Date	Time	Elapsed Time	Depth to Water	Water Elevation	Meas. Meth.	Tape No.	Well Status	Remarks	Initials

Measurement Method:
A = Airline
C = Chalk and tape
E = Electric tape
T = Tape with popper
X = Other (describe in remarks)

Well Status:
D = Dry
F = Flowing
P = Pumping
RP = Recently pumped
NP = Nearby well pumping
NRP = Nearby well recently
X = Obstructed

Signature: _____ **Date:** _____

FIGURE SOP016-8 ***(continued)***

Contractor: **Seq. #** /

Project No.:
Project Name: Location:
Field Party Chief: Client:

Well	Date	Time	Depth to Water	Stickup	MP Elev.	Meas. Meth.	Tape No.	Remarks/MP	Initials

Measurement Method:
A = Airline
C = Chalk and tape
E = Electric tape
T = Tape with popper
X = Other (describe in remarks)

Well Status:
D = Dry
F = Flowing
P = Pumping
RP = Recently pumped
NP = Nearby well pumping
NRP = Nearby well recently
X = Obstructed

FIGURE SOP016-9
GROUNDWATER LEVELS DATALOGGERS

Contractor
Project No.: **Well No.:**
Project Name: **Site:**
Field Party Chief: **Area:**

WELL DATA: Stickup: (**ft**) **up (+)/down (-) from:**

Measuring Point Description:
Remarks:

Datalogger:
Manufacturer: Model: S/N:
Tag No. Programmed in Logger:
Transducer: Manufacturer: Model: S/N:
Input/Units: Range:
Calibration: Pressure Rating:
0 ft submergence = (v) / (mv) ft submergence = (v)

Logging	Date	Time	Logging Time Interval	WL, ft Below MP	Submergence (logger reading)	Meas. Method	Tape No.	Well Status	Transducer Moved	Remarks	Initials
Start											
Stop											
Start											
Stop											

Data Transfer to Disk

Date	Time	File Name	Software Used for Transfer	Output Format	Initials

Measurement Method:
A = Airline
C = Chalk and tape
E = Electric tape
T = Tape with popper
X = Other (describe in remarks)

Well Status:
D = Dry
F = Flowing
P = Pumping
RP = Recently
NP = Nearby well pumping
NRP = Nearby well recently pumped
X = Obstructed

Signature **Date**

Standard Operating Procedure No. 019
for
Monitoring Well Installation

Prepared by

EA Engineering, Science, and Technology, Inc.
11019 McCormick Road
Hunt Valley, Maryland 21031

Revision 0
August 2007

CONTENTS

Page

1. SCOPE AND APPLICATION 1

2. MATERIALS 1

2.1 Drilling Equipment 1
2.2 Well Installation Materials 2
2.3 Documentation 4
2.4 Geologist's Personal Equipment 4

3. PROCEDURE 4

3.1 Materials Approval 4
3.2 Drilling 5
3.3 Logging 8
3.4 Well Construction and Installation 9

3.4.1 Grout 11

3.5 Monitoring Well Completion 11
3.6 Well Development 14

3.6.1 Materials Required 14
3.6.2 Summary of Procedures and Data Requirements 15

4. MAINTENANCE 16

5. PRECAUTIONS 16

6. REFERENCES 16

APPENDIX A: FIELD RECORD OF WELL DEVELOPMENT FORM

1. SCOPE AND APPLICATION

The installation of monitoring wells is contingent upon the existing conditions at the project site. The purpose of this Standard Operating Procedure is to delineate the quality control measures required to ensure the accurate installation of monitoring wells. The applicable Work Plan should be consulted for specific installation instructions. The term "monitoring wells," as used herein, is defined to denote any environmental sampling well. An example well log form is provided in Appendix A. Alternate, equivalent forms are acceptable.

2. MATERIALS

2.1 DRILLING EQUIPMENT

The following drilling equipment may be required:

- Appropriately sized drill adequately equipped with augers, bits, drill stem, etc.
- Steam cleaner and water obtained from approved source for decontaminating drilling equipment.
- Photoionization Detector: Microtip HL-200 (or equivalent)
- Water level indicator
- Weighted steel tape measure
- Lower explosive limit – oxygen monitor
- Steel drums for intrusion derived wastes (drill cuttings, contaminated personal protective equipment, decontamination solutions, etc.)
- Source of approved water
- Heavy plastic sheeting
- Sorbent pads and/or log.

2.2 WELL INSTALLATION MATERIALS[1]

The following well installation materials may be required:

- Well screen:[2]

  — Polyvinyl chloride (PVC): JOHNSON (or equivalent); PVC 0.010 slot; Schedule 40; flush-threaded (leak-proof) joints; PVC complies with American Society for Testing and Materials (ASTM) D2665, ASTM D1784, and ASTM F480; free of ink markings; cleaned and prepackaged by manufacturer.

  — Stainless steel: JOHNSON (or equivalent); stainless steel 0.010 slot; 304 stainless steel[3]; ASTM F480 flush threads; cleaned, wrapped, and heat sealed by manufacturer.

- Riser pipe:

  — PVC: JOHNSON (or equivalent); STD; PVC; Schedule 40; flush-threaded (leak-proof) joints; PVC complies with ASTM D2665, ASTM D1784, and ASTM F480; free of ink markings; cleaned and prepackaged by manufacturer.

  — Stainless steel: JOHNSON (or equivalent); Schedule 5; 304 stainless steel; ASTM Type A312 material; 4-in. diameter; cleaned, wrapped, and heat sealed by manufacturer.

- Plugs/caps: JOHNSON (or equivalent); standard PVC or stainless steel.

- Filter pack: MORIE, 100 well gravel (or equivalent). NOTE: Final gradation may vary as a function of the gradation of the formation.[2]

- Fine Ottawa sand.

- Bentonite seal: BAROID, bentonite pellets (3/8-in. diameter)

- Cement: Type II Portland Cement (table below).

1. Technical information on all installed materials (screens, riser pipe, filter pack, bentonite, cement, etc.) and representative samples of the proposed filter pack, bentonite powder, and bentonite pellets will be supplied to the Project Manager.
2. Well screen slot size and filter pack gradation will be determined from sieve analysis of aquifer materials. Screen and casing material type will be determined based on field tests of groundwater chemistry and contaminants.
3. Unless the sum of Cl-, F-, and Br- is >1,000 ppm, in which case Type 316 should be used.

Cement Type	Special Characteristics	Recommended Usage
I	No special properties	General use as grout mix or cement plug (if sulfates <250 ppm), surface pad.
IA	Air-entraining Type I (Note that air entrainment properties can be achieved by chemical admixtures)	Air entrainment gives cement greater freeze-thaw resistance. Recommended for surface pads.
II	Moderate sulfate resistance, low heat of hydration	General use as grout mix or cement plug where groundwater sulfate >250 ppm and <1,500 ppm, surface pad.
IIA	Air-entraining Type II	See Type IA.
III	High early strength, high heat of hydration	Elevated temperature can damage well casing and fracture grout/cement plugs. NOT RECOMMENDED.
IIIA	Air-entraining Type III	NOT RECOMMENDED.
IV	Low heat of hydration	General use as grout mix or cement plug preferred type for well abandonment to ensure intact grout/cement plug.
V	High Sulfate resistance	Use when groundwater sulfate levels >1,500 ppm.

- Bentonite powder: BAROID, Aquagel Gold Seal.
- Steel protective casing: BRAINARD-KILMAN (or equivalent) zinc-plated steel, lockable, painted.[4]
- Geotextile: MIRAFI (or equivalent); GTF 130; non-woven; 4 oz.
- Coarse (blanket) gravel: Crushed stone aggregate.
- Containers for purged water, as required.
- Submersible pump or bailer of appropriate capacity, and surge block sized to fit well.
- Hach DREL 2000 portable laboratory (or equivalent).
- Conductivity, pH, oxidation-reduction potential (ORP), turbidity, dissolved oxygen, and temperature meters.
- Electric well sounder and measuring tape.
- Portland Type II cement (see previous table).
- Steel Posts (pickets), painted (see footnote).

4. All painted components (protector casing, steel pickets) will be painted high-visibility orange and allowed to dry completely prior to being brought onsite.

2.3 DOCUMENTATION

The following document may be provided:

- Copy of appropriate Work Plan
- Copy of approved Health and Safety Plan
- Copies of well and excavation permits
- Boring log forms
- Well completion diagram form
- Well development form.

2.4 GEOLOGIST'S PERSONAL EQUIPMENT

The following equipment may be required for the geologist:

- 10X handlens
- Unified Soil classification System chart
- Munsell color chart
- Sieve set (Keck model SS-81 or equivalent)
- Personal protective equipment as required by the Health and Safety Plan.

3. PROCEDURE

3.1 MATERIALS APPROVAL

Water sources for drilling, grouting, sealing, filter placement, well installation, and equipment decontamination must be approved by the Project Manager prior to arrival of the drilling equipment. Information required for the water source includes: water source, manufacturer/ owner, address and telephone number, type of treatment and filtration prior to tap, time of access, cost per gallon (if applicable), dates and results associated with all available chemical analyses over the past 2 years, and the name and address of the analytical laboratory (if applicable).

Pure sodium bentonite with no additives (bentonite) will be the only drilling fluid additive allowed, and its use must be approved by the Project Manager prior to the arrival of the drilling equipment. The information required for evaluation includes: brand name, manufacturer, manufacturer's address and telephone number, product description, and intended use for the product.

Granular Filter Pack material must be approved by the Project Manager prior to drilling. A 1-pint representative sample must be supplied to the Project Manager. Information required includes: lithology, grain size distribution, brand name, source, processing method, and slot size of intended screen.

Portland Type II cement will be used for grout (see previous table).

3.2 DRILLING

The objective of the selected drilling technique is to ensure that the drilling method provides representative data while minimizing subsurface contamination, cross-contamination of aquifers, and drilling costs. The preferred drilling method is with a hollow-stem auger. Other drilling methods[5] are approved as conditions warrant, and will not require variances be issued by the U.S. Environmental Protection Agency. The method used at a specific site will be proposed in the work plan and evaluated by the Project Manager. Any drilling method not listed herein will require approval on a case by case basis by the U.S. Environmental Protection Agency.

A Site Geologist will be present during all well drilling and installation activities and will fully characterize all tasks performed in support of these activities into the monitoring well logbook. The Site Geologist will be responsible at only one operating rig for the logging of samples, monitoring of drilling operations, recording of water losses/gains and groundwater data, preparing the boring logs and well diagrams, and recording the well installation procedures of the rig. The Site Geologist will have onsite sufficient equipment in operable condition to perform efficiently his/her duties as outlined in the contractual documents. Items in the possession of each Site Geologist will include the approved Health and Safety Plan, this Standard Operating Procedure, a hand lens (10X), a standard color chart, grain-size chart, and a weighted (with steel or iron) steel tape long enough to measure the deepest well, heavy enough to reach that depth, and small enough to fit readily within the annulus between the well and drill casing. The Site Geologist will also have onsite, a water level measuring device, preferably electrical.

Only solid vegetable shortening (e.g., Crisco®) without flavoring or additives may be used on downhole drilling equipment. Additives containing either lead or copper will not be allowed. In addition, polychlorinated biphenyls will not be permitted in hydraulic fluids or other fluids used in the drilling rig, pumps, and field equipment/vehicles.

---

5. If the design depth of the well is <100 ft, open, hollow-stem augers will be used to drill the well unless "running sands" preclude the use of open augers. In that case, an inert "knockout" plug may be used in the bottom of the auger string. This plug will be driven out of the augers and left at the bottom of the hole when the well is installed.

   If the design depth of the well is >100 ft, rotary drilling methods may be used to install wells. The following drill fluids and methods are approved in the order listed: (1) rotary drilling with water from an approved source as drilling fluid (clays from the formations will tend thicken the fluid and coat the walls of the borehole and this is acceptable); (2) rotary drilling with water as a fluid, advancing a temporary casing with the bit to maintain an open hole; and (3) mud rotary using water with additives as drill fluid. Due to the potential for aquifer contamination and plugging, mud rotary drilling is not recommended for monitoring wells. If, however, "running sands" are encountered and the aquifer is expected to have a relatively high flow rate, then mud rotary is considered an approved method. Pure sodium bentonite is the only approved additive. Mud rotary drilling must be halted at the last aquitard above the target aquifer. Casing must be set, all bentonite-bearing fluids flushed from the hole and drill rig, and drilling may be resumed using water only as the drill fluid until the target depth is reached.

Surface runoff or other fluids will not be allowed to enter any boring or well during or after drilling/construction.

Antifreeze used to keep equipment from freezing will not contain rust inhibitors and sealants. Antifreeze is prohibited in areas in contact with drilling fluid. The ground surface at the well site will be protected from possible coolant, fuel, and hydraulic fluid spills and/or leakage by placement of plastic sheeting with raised edges, draining into a lined catch basin large enough to contain spills and/or leakage from motors, radiators, or vehicle tanks. Sorbent pillows will be placed to catch obvious leaks from the drill rig. Sorbent logs may be used instead of, or in conjunction with, a lined catch basin to contain spills.

An accurate measurement of the water level will be made upon encountering water in the borehole and later upon stabilization. Levels will be periodically checked throughout the course of drilling. Any unusual change in the water level in the hole, such as a sudden rise of a few inches may indicate artesian pressure in a confined aquifer, will be the basis for cessation of drilling. The geologist will immediately contact the Project Manager[6]. Particular attention for such water level changes will be given after penetrating any clay or silt bed, regardless of thickness, which has the potential to act as a confining layer.

Anticipated depths of wells are given in well specific work plans. In case the previously defined criteria have not been met before the depth range for a given hole is reached, the geologist will stop the drilling and confer with the Project Manager. The current boring conditions (depth, nature of the stratigraphic unit, and water table depth) will be compared to those of other wells nearby to decide to continue drilling or to terminate and complete the well.

If the well is to be installed in the surficial aquifer, drilling will be terminated before penetrating the basal aquitard. The basal aquitard is defined as the first 2 ft-thick clay below the water table, or below 5 ft in the case of a shallow aquifer.

If the well is to be installed in a lower, confined aquifer:

- Penetrations of aquifers located lower than the water table aquifer will be limited to avoid cross-contamination.

- Placement of new upper confined aquifer wells will be initially limited to those areas where contamination has been confirmed.

- The location of upper confined aquifer wells will be based upon the findings of the water table aquifer investigation. Areas of known contamination will be targeted for installing upper confined aquifer wells for the purposes of delineating vertical contamination.

6. The contract technical oversight will also be contacted for guidance.

- Where possible, upper-confined aquifer wells will be located such that they afford triangulation with other wells within the same aquifer to allow for a determination of groundwater flow direction.

- Some upper-confined aquifer wells will be installed approximately 10-15 ft from water table wells to enable the accurate assessment of vertical hydraulic gradients. If the direction of groundwater flow is known, wells within a group will be located sidegradient of each other.

- The boring will be advanced until the base of the surficial aquifer is reached (Section 3.2).

- An outer, surface casing will be set 2-5 ft into the confining layer to minimize the potential for cross-contamination from the unconfined aquifer during drilling activities.

- The surface casing will be driven into the confining bed and grouted into place. Grout will be tremied into the annulus around the outside of the casing to within 5 ft of the ground surface. A grout plug at least 2 ft thick will be tremied into the bottom of the surface casing. The grout will be permitted to cure for 24 hours. All drilling fluids within the surface calling will then be removed, and the casing will be flushed with clean potable water.

- The drilling equipment will be decontaminated, a smaller bit or auger selected, and the hole will be continued through the grout plug into the confined aquifer.

- If deeper aquifers are to be screened, repeat preceding steps until total depth is reached.

If dense non-aqueous phase liquid (DNAPL) contamination is detected during drilling, the well will be terminated and completed at the base of the aquifer. Drilling will not continue through the confining unit.

Stainless steel screens will be used in DNAPL wells. Screen size selection will be according to criteria set forth in Section 3.4. The formation grain size will be multiplied by the higher factor (6) to determine filter pack grain size. This will ensure that the filter pack is sufficiently coarse to permit DNAPL to pass freely from the formation into the coarser filter pack, then into the open well (Cohen and Mercer 1993).

DNAPL sampling cups are prohibited. The well screen will be capped, and set 0.3 ft (0.5 ft max.) into the top of the confining bed and rest on the bottom of the hole or bentonite backfill (if used). No sand will be placed below the screen. The remainder of the well installation and completion will be accomplished according to Section 3.4.

3.3 LOGGING

All borings for monitoring wells will be logged by a geologist. Logs will be recorded in a field logbook and/or a boring log. If the information is recorded in a logbook, it will be transferred to Boring Log Forms on a daily basis. Field notes are to include, as a minimum:

- Boring number
- Material description (as discussed below)
- Weather conditions
- Evidence of contamination
- Water conditions (including measured water levels)
- Daily drilling footage and quantities (for billing purposes)
- Notations on man-placed materials
- Drilling method and borehole diameter
- Any deviations from established field plans
- Blow counts for standard penetration tests
- Core and split-spoon recoveries.

Material description for soil samples must include:

- Classification
- Unified Soil Classification symbol
- Secondary components and estimated percentages
- Color
- Plasticity
- Consistency
- Density
- Moisture content
- Texture/fabric/bedding and orientation
- Grain angularity
- Depositional environment and formation
- Incidental odors
- Photoionization detector reading(s)
- Staining.

Material description for rock samples must include:

- Classification
- Lithologic characteristics
- Bedding/banding characteristics
- Color
- Hardness
- Degree of cementation
- Texture
- Structure and orientation

- Degree of weathering
- Solution or void conditions
- Primary and secondary permeability
- Sample recovery
- Incidental odors
- Photoionization detector reading(s)
- Staining.

3.4 WELL CONSTRUCTION AND INSTALLATION

After the hole is drilled and logged, backfill hole as required for proper screen placement. The integrity of the aquitard will be restored by placing a bentonite plug of an appropriate thickness, either to the top of the aquitard (normal well installation) or to within 0.3 ft of the top of the aquitard (DNAPL well). Aquifer fill will be clean filter pack.

Normal screen placement for the water table (surficial) aquifer will be within 2 ft of the screen extending above the static water level. The bottom of the screen will rest no more than 6 in. from the bottom of the hole or backfill material, whichever is applicable.

NOTE: The end cap in DNAPL wells will rest on the bottom of the bottom of the hole, or bentonite backfill if applicable (Section 3.2).

Screen placement for a confined aquifer well will normally be at the top of the confined aquifer.

Screen lengths will not normally exceed 10 ft. If it appears advantageous in a given situation (e.g., to screen an entire aquifer which is thicker than 10 ft), approval must be sought on a case-by-case basis from the appropriate regulatory agency. Otherwise, wells will be screened as follows:

Thickness of Aquifer	Action
<10 ft	Screen entire aquifer
>10 ft <30 ft	Screen top 10 ft consider vertically nested well cluster
>30 ft	Install vertically nested well cluster

The installation of monitoring wells in uncased or partially cased holes will begin within 12 hours of completion of drilling, or if the hole is to be logged, within 12 hours of well logging, and within 48 hours for holes fully cased with temporary drill casings. Once installation has begun, work will continue until the well has been grouted and the drill casing has been removed.

Well screens, casings, and fittings will conform to National Sanitation Foundation Standard 14 or ASTM equivalent for potable water usage. These materials will bear the appropriate rating logo. If the logos are not present, a written statement from the manufacturer/supplier stating that the materials contain the appropriate rating must be obtained. Material used will be new and essentially chemically inert to the site environment.

Well screen and casing should be inert with respect to the groundwater; therefore, the selection of screen and casing material will be based on select field tests of aquifer chemistry and potential contaminants. The screen will be capped without sediment trap or DNAPL sampling cup, and lowered into the hole. The well casing will be pre-cut to extend 2-2.5 ft above ground surface. Prior to placement of the last piece of well casing, a notch or other permanent reference point will be cut, filed, or scribed into the top edge of the casing.

Screen slot size will be appropriately sized to retain 90-100 percent of the filter pack material, the size of which will be determined by sieve analysis of formational material (Section 3.4).

The tops of all well casing will be capped with covers composed of materials compatible with the products used in the well installation. Caps may either be vented, or a telescopic fit, constructed to preclude binding to the well casing caused by tightness of fit, unclean surfaces, or weather conditions. In either case, it should be secure enough to preclude the introduction of foreign material into the well, yet allow pressure equalization between the well and the atmosphere.

Filter pack material will be placed, lightly tamped, and leveled. Filter pack will extend from the bottom of the hole to a height of 1-2 ft above the top of the screen. The filter pack will be capped with a minimum of 1 ft of fine (Ottawa) sand to prevent the bentonite seal from infiltrating the filter pack. If the bentonite seal is placed as a slurry, a minimum of 2 ft of fine sand will be required.

If the hole is less than 20-ft deep, the filter pack may be poured into the annulus directly. If the hole is deeper than 20 ft, the filter pack must be tremied into place.

Granular filter packs will be chemically and texturally clean, inert, and siliceous.

Filter pack grain size will be based on formation grain-size analysis. The D30 (70 percent retained) sieve size multiplied by a factor of not less than 3 nor greater than 6 will be used to determine the appropriate grain size.

Calculations regarding filter pack volumes will be entered into the Field Logbook along with any discrepancies between calculated and actual volumes used. If a discrepancy of greater than 10 percent exists between calculated and actual volumes exists, an explanation for the discrepancy will also be entered in the Field Logbook.

Bentonite seals will be no less than 2-ft thick nor more than 5-ft thick as measured immediately after placement. The normal installation will include a 5-ft seal. Thinner seals may be used in special cases. The final depth to the top of the bentonite seal will be measured and recorded.

3.4.1 Grout

Grout used in construction will be composed by weight of:

- 20 parts cement (Portland cement, type II) (see previous table)
- 0.4-1 part (maximum) (2-5 percent) bentonite
- 8-gal (maximum) approved water per 94-lb bag of cement.

Neither additives nor borehole cuttings will be mixed with the grout. Bentonite will be added after the required amount of cement is mixed with the water.

All grout material will be combined in an aboveground container and mechanically blended to produce a thick, lump-free mixture. The mixed grout will be recirculated through the grout pump prior to placement. Grout placement will be performed using a commercially available grout pump and a rigid, side discharge tremie pipe.

The following will be noted in the Field Logbook: (1) calculations of predicted grout volumes; (2) exact amounts of cement, bentonite, and water used in mixing grout; (3) actual volume of grout placed in the hole; and (4) any discrepancies between calculated and actual volumes used. If a discrepancy of greater than 10 percent exists between calculated and actual volumes exists, an explanation for the discrepancy will also be entered in the Field Logbook.

Well protective casings will be installed around all monitoring wells on the following day as the initial grout placement around the well. Any annulus formed between the outside of the protective casing and the borehole will be filled to ground surface with cement.

The construction of each well will be depicted as built in a well construction diagram. The diagram will be attached to the boring log and will graphically denote:

- Screen location, length
- Joint location
- Granular filter pack
- Seal
- Grout
- Cave-in
- Centralizers
- Height of riser
- Protective casing detail.

3.5 MONITORING WELL COMPLETION

Assemble appropriate decontaminated lengths of pipe and screen. Make sure these are clean and free of grease, soil, and residue. Lower each section of pipe and screen into the borehole, one at a time, screwing each section securely into the section below it. No grease, lubricant, polytetrafluoroethelyne tape, or glue may be used in joining the pipe and screen sections.

If a well extends below 50 ft, centralizers will be installed at 50 ft and every 50 ft thereafter except within screened interval and bentonite seal. Centralizer material will be PVC, polytetrafluoroethelyne, or stainless steel. Determination of centralizer material will be based on the same criteria as screen and calling selection.

Cut the riser with a pipe cutter approximately 2-2.5 ft above grade. All pipe cuts MUST be square to ensure that the elevation between the highest and lowest point of the well casing is less than or equal to 0.02 ft Notch, file, or otherwise permanently scribe a permanent reference point on the top of the casing.

Torches and saws may not be used to cut the riser. Care must be taken that all filings or trimmings cut from the reference point fall outside the riser rather than into the well. **Under no circumstances will a permanent marker or paint pencil be used to mark the reference point**.

In some locations, safety requirements may mandate that a well be flush-mounted with no stick-up. If a flush-mounted well is required at a given location, an internal pressure cap must be used instead of a vented cap to ensure that rainwater cannot pool around the wellhead and enter the well through the cap.

When the well is set to the bottom of the hole, temporarily place a cap on top of the pipe to keep the well interior clean.

Place the appropriate filter pack (Section 3.4). Monitor the rise annulus with a weighted tape to assure that bridging is not occurring.

After the pack is in place, wait 3-5 minutes for the material to settle, tamp and level a capped PVC pipe, and check its depth weighted steel tape.

Add a 1-2 ft cap of fine-grained (Ottawa) sand to prevent infiltration of the filter pack by overlying bentonite seal. See Section 3.4 for guidance on appropriate thickness of fine sand layer.

Install the bentonite seal (2- to 5-ft thick) by dropping bentonite pellets into the hole gradually. If the well is deeper than 30 ft, a tremie pipe will be used to place either bentonite pellets or slurry. Tamp and level pellets. If the well is 30 ft, tamp with a capped PVC pipe, if >30 ft, tamping bay be accomplished with the weighted end of the tape. In either case, check the depth to the top of the seal with a weighted tape as above.

If the bentonite pellets are of poor quality, they may have a tendency to hydrate and swell inside the tremie pipe and bridge. This situation may be solved by the following procedure:

1. Use a different brand of pellets. Different brands may have longer hydration times.

2. Freeze the pellets[7]. Note that this will require a longer wait time to allow proper hydration after the pellets thaw.

3. Place the bentonite seal as a slurry using a side-discharge tremie pipe as though installing grout. Note (Section 3.4) this will require that a minimum of 2 ft of fine sand be placed as a cap on top of the filter pack material.

Wait for the pellets to hydrate and swell. Hydration times will be determined by field test or by manufacturer's instructions. Normally this will be 30-60 minutes. Document the hydration time in the field notebook. If the pellets are above the water level in the hole, add several buckets of clean water to the boring. Document the amount of water added to the hole.

Mix an appropriate cement-bentonite slurry (Section 3.4). Be sure the mixture is thoroughly mixed and as thick as is practicable.

Lower a side discharge tremie pipe into the annulus to the level of the pellet seal.

Pump the grout slurry into the annulus while withdrawing the tremie pipe and temporary casing.

Stop the grout fill at 5 ft below the ground surface. Allow to cure for not less than 12 hours. If grout settles more than 6 in., add grout to bring level back up to within 5 ft of ground surface. Place approximately 2 ft of bentonite pellets (minimum 0.5 ft) in annulus. Seat the protective casing in the bentonite seal, allowing no more than 0.2 ft between the top of the well casing and the bottom of the protective casing cap. Fill inner annulus (between well casing and protective casing) with bentonite pellets to the level of the ground surface. Cover bentonite pellets with 1 ft of clean granular material (coarse sand or pea gravel filter pack). Fill the outer annulus (between the protective casing and the borehole) with neat cement. Allow the cement to mound above ground level and finish to slope away from the casing. Lock the cap.

— OR —

Continue the grout fill to the ground surface. Seat the protective casing in the grout, allowing no more than 0.2 ft between the top of the well casing and the bottom of the protective casing cap. Lock the cap.

— AND —

Allow the grout slurry to set overnight.

7. Bentonite pellets may be "flash-frozen" by brief immersion in liquid nitrogen (LN2). This can be accomplished by pouring LN2 over a small quantity (0.25-0.5 bucket) of pellets, allowing the LN2 to boil off, then pouring the pellets into the tremie pipe. **NOTE:** Use of LN2 is an additional jobsite hazard and must be addressed in the contractor's Health and Safety Plan. This contingency must be covered before drilling starts in order to avoid delays in well installation.

Fill the outer annulus (between the casing and the borehole) with neat cement. Allow the cement to mound above ground level and finish to slope away from the casing.

Slope the ground surface away from the casing for a distance of 2 ft, at a rate of no less than 1 in. in 2 ft. Surface this sloping pad with a geotextile mat covered by 3 in. of coarse gravel.

— OR —

Frame and pour a 4-ft square × 6-in. thick (4 ft × 4 ft × 6 in.) concrete pad centered around the protective casing.

— AND —

Set pre-painted protective steel pickets (3 or 4) evenly around and 4 ft out from well. These pickets will be set into 2 ft deep holes, the holes will then be filled with concrete; and if the pickets are not capped, they will also be filled with concrete.

3.6 WELL DEVELOPMENT

Well development is the process by which drilling fluids, solids, and other mobile particulates within the vicinity of the newly installed monitoring well have been removed while restoring the aquifer hydraulic conductivity. Development corrects any damage to or clogging of the aquifer caused by drilling, increases the porosity of the aquifer in the vicinity of the well, and stabilizes the formation and filter pack sands around the well screen.

Well development will be initiated after 48 consecutive hours but no longer than 7 calendar days following grouting and/or placement of surface protection.

Two well development techniques, over pumping and surging, will be employed in tandem. Over pumping is simply pumping the well at a rate higher than recharge. Surging is the operation of a plunger up and down within the well casing similar to a piston in a cylinder.

3.6.1 Materials Required

The following materials will be required for well development:

- Well Development Form
- Boring Log and Well Completion Diagram for the well
- Submersible pump or bailer of appropriate capacity, and surge block
- Conductivity, pH, ORP, turbidity, dissolved oxygen, and temperature meters
- Electric well sounder and measuring tape
- Containers for purged water, if required.

3.6.2 Summary of Procedures and Data Requirements

Pump or bail the well to ensure that water flows into it, and to remove some of the fine materials from the well. Removal of a minimum of one equivalent volume is recommended at this point. The rate of removal should be high enough to stress the well by lowering the water level to approximately half its original level. If well recharge exceeds 15 gpm, the requirement to lower the head will be waived.

Slowly lower a close-fitting surge block into the well until it rests below the static water level, but above the screened interval. (NOTE: This latter is not required in the case of a light non-aqueous phase liquid well.)

Begin a gentle surging motion which will allow any material blocking the screen to break up, go into suspension, and move into the well. Continue surging for 5-10 minutes, remove surge block, and pump or bail the well, rapidly removing at least one equivalent volume.

Repeat previous step at successively lower levels within the well screen until the bottom of the well is reached. Note that development should always begin above, or at the top of, the screen and move progressively downward to prevent the surge block from becoming sand locked in the well casing. As development progresses, successive surging can be more vigorous and of longer duration as long as the amount of sediment in the screen is kept to a minimum.

Development is expected to take at least 2 hours in a small well installed in a clean sand, and may last several days in large wells, or in wells set in silts with low permeabilities.

Development will continue until little or no sediment can be pulled into the well, and target values for parameters listed below are met.

At a minimum, development will remove 3-5 well volumes of water. One development volume (DV) is defined as (1) equivalent volume, plus (1) the amount of fluid lost during drilling, plus (1) the volume of water used in filter pack placement.

1. Monitor water quality parameters before beginning development procedures, and after removing 2, 2.5, and 3 well volumes of water.

2. If these parameters have stabilized over the three readings, the well will be considered developed.

3. If the parameters have not stabilized after these three readings, continue pumping the well to develop, but stop surging. Monitor the stabilization parameters every half DV.

4. When the parameters have stabilized over three consecutive readings at half DV intervals, the well will be considered developed.

All water removed must be disposed of as directed by the Work Plan.

Record all data as required on a Well Development Record Form (Appendix A), which is made a part of the complete Well Record. These data include:

- Depths and dimensions of the well, casing, and screen obtained from the well diagram.
- Water losses and uses during drilling, obtained from the boring log for the well.
- Measurements of the following indicator parameters: turbidity, pH, conductivity, ORP potential, dissolved oxygen, and temperature.
- Target values for the indicator parameters listed above are as follows: pH – stabilize, conductivity – stabilize, ORP – stabilize, dissolved oxygen –- stabilize, temperature – stabilize, turbidity – 5 nephelometric turbidity units or stabilize. A value is considered to have stabilized when three consecutive readings taken at half DV intervals are within 10 percent of each other.
- Notes on characteristics of the development water.
- Data on the equipment and technique used for development.
- Estimated recharge rate and rate/quantity of water removal during development.

4. MAINTENANCE

Not applicable.

5. PRECAUTIONS

Refer to the site-specific Health and Safety Plan for discussion of hazards and preventive measures during well development activities.

6. REFERENCES

Aller, L. et al. 1989. Handbook of Suggested Practices for the Design and Installation of Groundwater Monitoring Wells, National Water Well Association.

American Society for Testing and Materials (ASTM). D2487-92 Standard Classification of Soils for Engineering Purposes (Unified Soil Classification System).

ASTM. D5092-90 Standard Practice for Design and Installation of Groundwater Monitoring Wells in Aquifers.

Cohen, R.M. and J.W. Mercer. 1993. DNAPL Site Evaluation, CRC Press, Inc.

Nielsen, D.M. 1993. Correct Well Design Improves Monitoring, in *Environmental Protection*, Vol.4, No.7. July.

U.S. Army Toxic and Hazardous Materials Agency. 1987. Geotechnical Requirements for Drilling, Monitoring Wells, Data Acquisition and Reports. March.

U.S. Environmental Protection Agency. 1989. Groundwater Handbook.

Appendix A

Field Record of Well Development Form

EA Engineering, P.C.
EA Science and Technology

FIELD RECORD OF WELL DEVELOPMENT

Project Name:	Project No:	Date:
EA Personnel:	Development Method:	
Weather/Temperature/Barometric Pressure:		Time:

Well No.:	Well Condition:
Well Diameter:	Measurement Reference:
Well Volume Calculations	
A. Depth To Water (ft):	D. Well Volume/ft:
B. Total Well Depth (ft):	E. Total Well Volume (gal)[C*D]:
C. Water Column Height (ft):	F. Five Well Volumes (gal):

Parameter	Beginning	1 Volume	2 Volumes	3 Volumes	4 Volumes	5 Volumes
Time (min)						
Depth to Water (ft)						
Purge Rate (gpm)						
Volume Purged (gal)						
pH						
Temperature (°F)						
Conductivity (µmhos/cm)						
Dissolved Oxygen						
Turbidity (NTU)						
ORP (mV)						

Parameter	6 Volumes	7 Volumes	8 Volumes	9 Volumes	10 Volumes	End
Time (min)						
Depth to Water (ft)						
Purge Rate (gpm)						
Volume Purged (gal)						
pH						
Temperature (°F)						
Conductivity (µmhos/cm)						
Dissolved Oxygen						
Turbidity (NTU)						
ORP (mV)						

NOTE: NTU = Nephelometric turbidity unit.
ORP = Oxidation-reduction potential.

COMMENTS AND OBSERVATIONS: _____

EA Engineering, P.C.
EA Science and Technology

FIELD RECORD OF WELL DEVELOPMENT

Project Name:	Project No:	Date:
EA Personnel:	Development Method:	
Weather/Temperature/Barometric Pressure:		Time:

Well No.:	Well Condition:
Well Diameter:	Measurement Reference:

Parameter	Beginning	1 Volume	2 Volumes	3 Volumes	4 Volumes	5 Volumes
Time (min)						
Depth to Water (ft)						
Purge Rate (gpm)						
Volume Purged (gal)						
pH						
Temperature (°F)						
Conductivity (µmhos/cm)						
Dissolved Oxygen						
Turbidity (NTU)						
ORP (mV)						

Parameter	6 Volumes	7 Volumes	8 Volumes	9 Volumes	10 Volumes	End
Time (min)						
Depth to Water (ft)						
Purge Rate (gpm)						
Volume Purged (gal)						
pH						
Temperature (°F)						
Conductivity (µmhos/cm)						
Dissolved Oxygen						
Turbidity (NTU)						
ORP (mV)						

Standard Operating Procedure No. 021
for
Sediment Sampling

Prepared by

EA Engineering, Science, and Technology, Inc.
11019 McCormick Road
Hunt Valley, Maryland 21031

Revision: 1
August 2010

CONTENTS

Page

1. SCOPE AND APPLICATION 1

2. PROCEDURES 1

3. GENERAL PROCEDURES 1

4. CORERS 3

5. SCOOPS AND SPOONS 3

6. DREDGES 4

6.1 Peterson and Ponar Dredges 4
6.2 Eckman Dredge 4

7. REFERENCES 4

1. SCOPE AND APPLICATION

This Standard Operating Procedure (SOP) delineates protocols for sampling sediments from streams, rivers, ditches, lakes, ponds, lagoons, and marine and estuarine systems.

EA recognizes that other protocols have been developed that meet the criteria of quality and reproducibility. Clients may have their own sediment sampling protocols which may contain methodologies and procedures that address unique or unusual site-specific conditions or may be in response to local regulatory agency requirements. In such cases, EA will compare its and the client's protocols. The goal is to provide the client with the most quality; therefore, if the client's protocols provide as much or more quality assurance than EA's protocols for the particular site or project, EA will adopt those particular protocols and this SOP will be superseded in those respects. If EA is required to implement the client's protocols in lieu of EA's protocols, EA will make the client formally aware of any concerns regarding differences in protocols that might affect data quality and will document such concerns in the project file.

2. PROCEDURES

The water content of sediment varies. Sediments range from soft to dense and fine to rocky. A variety of equipment may be necessary to obtain representative samples, even at a single site. Factors to consider in selecting the appropriate sampling equipment include sample location (edge or middle of the waterbody), depth of water and sediment, grain size, water velocity, and analytes of interest.

3. GENERAL PROCEDURES

1. Surface water and sediment samples are to be collected at the same location (if both are required in the project-specific Sampling and Analysis Plan).

2. Collect the surface water sample first. Sediment sampling usually results in disturbance of the sediments, which may influence the analytical results of the surface water samples.

3. Wear gloves when collecting samples. Comply with the Health and Safety Plan specifications for proper personal protective equipment.

4. If sampling from a boat or near waterbodies with depths of 4 ft or more, the sampling team will wear life jackets.

5. Wading into a waterbody disturbs the sediment. Move slowly and cautiously, approach the sample location from downstream. If flow is not strong enough to move entrained particles away from the sample location, wait for the sediment to resettle before sampling.

6. Collect samples first from areas suspected of being the least contaminated, thus minimizing the risk of cross-contamination.

7. Collecting samples directly into sample containers is not recommended. Sediment samples should be placed in Teflon®, stainless steel, or glass trays, pans, or bowls for sample preparation.

8. Use the proper equipment and material construction for the analytes of interest. For example, for volatile organic compound analysis, the sampling material in direct contact with the sediment or surface water must consist of Teflon, polyethylene, or stainless steel.

9. Refer to EA SOP No. 005 (Field Decontamination) for proper decontamination methods before and after sampling and between samples.

10. Collect samples for volatile organic compound analysis first. Do not mix such samples before placing them in the sample containers. For composite volatile organic compound samples, place equal aliquots of each subsample in the sample container.

11. Sediment that will be analyzed for other than volatile organic compounds should be prepared as follows:

    - Place the sediment in a mixing container.
    - Divide the sediment into quarters.
    - Mix each quarter separately and thoroughly.
    - Combine the quarters and mix thoroughly.
    - For composite samples, mix each subsample as described above. Place equal aliquots of each subsample in a mixing container and follow the procedure described above.

12. Mark the sampling location on a site map. Record sampling location coordinates with a Global Positioning System unit, photograph (optional, recommended) and describe each location, and place a numbered stake above the visible high water mark on the bank closest to the sampling location. The photographs and description must be adequate to allow the sampling station to be relocated at a future date.

13. Dispose of investigation-derived wastes according to applicable rules and regulations.

4. CORERS

A corer provides a vertical profile of the sediment, which may be useful in tracing historical contaminant trends. Because displacement is minimal, a corer is particularly useful when sampling for trace metals and organics. Corers can be constructed out of a variety of materials.

For example, a 2-in. diameter polyvinyl chloride pipe with a Teflon or polyethylene liner can be lowered into the sediment; a 2-in. diameter well cap can be used to form an airtight seal and negative pressure as the pipe is withdrawn.

- Ensure that the corer and (optional) liner are properly cleaned.
- Stand downstream of the sample location.
- Force the corer into the sediment with a smooth continuous motion. Rotate (not rock) the corer if necessary to penetrate the sediment.
- Twist the corer to detach the sample; then withdraw the corer in a single smooth motion. If the corer does not have a nosepiece, place a cap on the bottom to keep the sediment in place.
- Remove the top of the corer and decant the water (into appropriate sample containers for surface water analysis, if required).
- Remove the nosepiece or cap and deposit the sample into a stainless steel, Teflon, or glass tray.
- Transfer the sample into sample containers using a stainless steel spoon (or equivalent device).

5. SCOOPS AND SPOONS

When sampling at the margins of a waterbody or in shallow water, scoops and spoons may be the most appropriate sampling equipment. For collecting samples several feet from shore or in deeper water, the scoop or spoon may be attached to a pole or conduit.

- Stand downstream of the sample location.
- Collect the sample slowly and gradually to minimize disturbing the fine particles.
- Decant the water slowly to minimize loss of fine particles.
- Transfer the sediment to sample containers or mixing trays, as appropriate.

6. DREDGES

Three types of dredges are most frequently used: Peterson, Ponar, and Eckman. Many other dredge types are available; their applicability will depend upon site-specific factors.

6.1 PETERSON AND PONAR DREDGES

These dredges are suitable for hard, rocky substrates, deep waterbodies, and streams with fast currents. Ponars have top screens and side plates to prevent sample loss during retrieval.

- Open the jaws and place the cross bar into the proper notch.
- Lower the dredge to the bottom, making sure it settles flat.
- When tension is removed from the line, the cross bar will drop, enabling the dredge to close as the line is pulled upward during retrieval.
- Pull the dredge to the surface. Make sure the jaws are closed and that no sample was lost during retrieval.
- Open the jaws and transfer the sediment to sample containers or to a mixing tray.

6.2 ECKMAN DREDGE

The Eckman dredge works best in soft substrates in waterbodies with slow or no flow.

- Open the spring-loaded jaws and attach the chains to the pegs at the top of the sampler.
- Lower the dredge to the bottom, making sure it settles flat.
- Holding the line taut, send down the message to close the jaws.
- Pull the dredge to the surface. Make sure the jaws are closed and that no sample was lost during retrieval.
- Open the jaws and transfer the sediment to sample containers or a mixing tray.

7. REFERENCES

None.

Standard Operating Procedure No. 022
for
Sediment and Benthic Macroinvertebrate Sampling with Eckman Grab

Prepared by

EA Engineering, Science, and Technology, Inc.
11019 McCormick Road
Hunt Valley, Maryland 21031

Revision 0
August 2007

CONTENTS

Page

1. SCOPE AND APPLICATION 1
2. MATERIAL 1
3. PROCEDURES 1
4. MAINTENANCE 2
5. PRECAUTIONS 2
6. REFERENCES 3

1. SCOPE AND APPLICATION

This Standard Operating Procedure covers the protocol for obtaining qualitative or quantitative samples of soft sediments and macroinvertebrates inhabiting soft sediments in lakes, reservoirs, and other waterbodies. The Eckman grab sampler is well suited to collecting samples in deeper (up to 100 ft) waterbodies.

Use of brand names in this Standard Operating Procedure is not intended as endorsement or mandate that a given brand be used. Alternate equivalent brands of detectors, sensors, meters, etc. are acceptable. If alternate equipment is to be used, the contractor will provide applicable and comparable standard operating procedures for the maintenance and calibration of same.

2. MATERIAL

The following materials may be required:

Eckman grab sampler: a box-shaped device with two scoop-like jaws	Sample containers
Boat	Sieve – 500 µ (U.S. Standard No. 30)
Personal protective equipment	Stainless steel spoon or trowel
Personal flotation devices	

3. PROCEDURES

The following is a summary of procedures on use of the Eckman grab sampler:

- Cock the sampler by raising each jaw upward into the cocked position using the attached able and secure the cable to the catch pin located at the top of the sampler.
- Once cocked, lift the sampler overboard and lower slowly but steadily to the bottom.
- Once on the bottom, indicated by a slack line, the weighted messenger is sent down the line tripping the catch mechanism, causing the spring loaded jaws to close the bottom of the sampler, containing the sediment.
- Raise the sample at a slow but steady rate to prevent sample loss or washout.
- Once the sample is on board, empty the sample into a stainless steel, polytetrafluoroethelyne, or polytetrafluoroethelyne-lined bowl or tray for processing.
  - If the sediment will be analyzed for volatile organic compounds, transfer the sample into the appropriate sample containers immediately.

- If the sediment will not be analyzed for volatile organic compounds, use Stainless steel spoon to thoroughly homogenize sample, then transfer sample into appropriate containers. Add preservative (if required) and place in ice-filled chest.

  — If benthic macroinvertebrates are to be collected, sieve sample and transfer macroinvertebrates into appropriate container.

- Thoroughly decontaminate the device.

4. MAINTENANCE

Maintain according to manufacturer's suggestions.

5. PRECAUTIONS

The following precautions should be taken while using an Eckman grab sampler:

- Inspect the device for mechanical deficiencies prior to its use.
- This sampler is inefficient in waters deeper than approximately 75-100 ft, under adverse weather conditions, and in waters of moderate to strong currents or wave action.
- Exercise caution at all times once the grab is loaded or cocked because a safety lock is not part of the standard design.
- Operate the sampler from a boat with a winch and cable.
- Wear gloves when collecting sediment samples. Be sure to consult the health and safety plan for the proper dermal and respiratory protection prior to collecting any samples.
- Higher levels of personal protective equipment may be required by the Health and Safety Plan.
- While sampling from a boat in waterbodies with a depth of 5 ft or more, the sampling team will wear personal flotation devices (life jackets).
- Collect samples first from those areas that are suspected of being the least contaminated, thus minimizing the risk of cross-contamination.

6. REFERENCES

American Society for Testing and Materials. Standard 2.1. D4387 Guide for Selecting Grab Sampling Devices for Collecting Benthic Macroinvertebrates.

U.S. Environmental Protection Agency. 1990. Macroinvertebrate Field and Laboratory Methods for Evaluating the Biological Integrity of Surface Waters. Office of Research and Development. EPA/600/4-90/030. November.

Standard Operating Procedure No. 025
for
Soil Sampling

Prepared by

EA Engineering, Science, and Technology, Inc.
11019 McCormick Road
Hunt Valley, Maryland 21031

Revision 0
August 2007

CONTENTS

Page

1. SCOPE AND APPLICATION 1

2. MATERIALS 1

3. PROCEDURE 1

   3.1 Subsurface Samples 1
   3.2 Surficial Soil Samples 2

4. MAINTENANCE 2

5. PRECAUTIONS 2

6. REFERENCES 2

1. SCOPE AND APPLICATION

The purpose of this Standard Operating Procedure is to delineate protocols for sampling surface and subsurface soils. Soil samples give an indication of the area and depth of site contamination, so a representative sample is very important.

2. MATERIALS

The following materials may be required:

Bucket auger or push tube sampler	Split-spoon, Shelby tube, or core barrel sampler
Drill rig and associated equipment	Stainless steel bowl
Personal protective equipment as required by the Health and Safety Plan	Stainless steel spoon, trowel, knife, spatula (as needed)

3. PROCEDURE

3.1 SUBSURFACE SAMPLES

Don personal protective equipment. Collect split-spoon, core barrel, or Shelby Tube samples during drilling. Upon opening sampler, or extruding sample, immediately screen soil for volatile organic compounds using either a photoionization detector or flame ionization detector. If sampling for volatile organic compounds, determining the area of highest concentration, use a stainless steel knife, trowel, or laboratory spatula to peel and sample this area. Log the sample in the Field Logbook while it is still in the sampler. Peel and transfer the remaining sample in a decontaminated stainless steel bowl. Mix thoroughly with a decontaminated stainless steel spoon or trowel. Place the sample into the required number of sample jars. Preserve samples as required. Discard any remaining sample into the drums being used for collection of cuttings. Decon sampling implements. All borings will be abandoned.

NOTE: If sample recoveries are poor, it may be necessary to composite samples before placing them in jars. In this case, the procedure will be the same, except that two split-spoon samples will be mixed together. The Field Logbook should clearly state that the samples have been composited, which samples were composited, and why the compositing was done.

Samples taken for geotechnical analysis will be undisturbed samples, collected using a thin-walled (Shelby tube) sampler.

3.2 SURFICIAL SOIL SAMPLES

Don personal protective equipment. Remove vegetative mat. Collect a sample from under the vegetative mat with a stainless steel trowel, push tube sampler, or bucket auger. If a representative sample is desired over the depth of a shallow hole or if several shallow samples are to be taken to represent an area, composite as follows:

- As each sample is collected, place a standard volume in a stainless steel bowl.
- After all samples from each hole or area are in the bucket, homogenize the sample thoroughly with a decontaminated stainless steel spoon or spatula.

If no compositing is to occur, place sample directly into the sample jars. Place the leftover soil in the auger borings and holes left by sampling. If necessary, add clean sand to bring the subsampling areas back to original grade. Replace the vegetative mat over the disturbed areas. Samples for volatile organic compounds will not be composited. A separate sample will be taken from a central location of the area being composited and transferred directly from the sampler to the sample container. Preserve samples as required. Decon sampling implements.

4. MAINTENANCE

Not applicable.

5. PRECAUTIONS

Refer to the Health and Safety Plan.

Soil samples will not include vegetative matter, rocks, or pebbles, unless the latter are part of the overall soil matrix.

6. REFERENCES

American Society for Testing and Materials (ASTM). Method D1586-84, Penetration Test and Split-Barrel Sampling of Soils.

ASTM. Method D1587-83, Thin Walled Sampling of Soils.

Department of the Army, Office of the Chief of Engineers. 1972. Engineer Manual 1110-2-1907 Soil Sampling. 31 March.

Standard Operating Procedure No. 028
for
Well and Boring Abandonment

Prepared by

EA Engineering, Science, and Technology, Inc.
11019 McCormick Road
Hunt Valley, Maryland 21031

Revision 0
August 2007

CONTENTS

Page

1. SCOPE AND APPLICATION 1

2. MATERIALS 1

3. PROCEDURE 1

   3.1 Grout 2
   3.2 Borings 2

      3.2.1 Shallow Borings not Penetrating Water Table 2
      3.2.2 Borings Penetrating the Water Table 3
      3.2.3 Deep Stratigraphic Borings 3

   3.3 Wells 3

4. REPLACEMENT WELLS 4

5. PRECAUTIONS 4

1. SCOPE AND APPLICATION

The purpose of this Standard Operating Procedure is to establish the protocols by which all wells and borings will be safely abandoned. The primary objective of well abandonment is to ensure that the abandoned well or boring does not provide a conduit for the vertical migration of contamination between aquifers.

2. MATERIALS

The following materials may be required:

Drill rig	Bentonite pellets (seal)
Filter pack material	Cement (Portland Type II)
Pure sodium bentonite with no additives (bentonite) powder (grout)	Approved water

3. PROCEDURE

The procedures used in boring abandonment will ideally accomplish two objectives: (1) protect aquifers from cross-contamination by sealing the borehole, and (2) restore the strata in the borehole to nearly original conditions by selective placement of fill material.

Any casing will be pulled, drilled out, or thoroughly pierced. Using tremie pipe, grout will be placed from the bottom of the hole to within 3 ft of the ground surface, and allowed to settle for 24 hours. The remainder of the hole will be filled with concrete. The surface of the concrete will be mounded, smoothed, and inscribed with “ABD,” for abandoned, any assigned well or boring designation, and the date the hole was abandoned. All boring logs, samples, completion records, and abandonment procedures will be included in the records of work on the site or cluster.

If the hole is within 10 ft of a monitoring well in the same aquifer, or a replacement well is to be installed within 10 ft of the well, any temporary casing will be pulled, drilled out, or thoroughly pierced. Using tremie pipe, the hole will then be backfilled with filter pack material opposite sand strata and bentonite or grout opposite substantial (2 ft or thicker) clay and silt strata. Where sand as backfill approaches the ground surface, 2 ft of bentonite will be placed above the sand and a 3-ft concrete plug will be placed at the surface. Otherwise, backfill materials will be placed from the bottom of the hole to within 3 ft of the ground surface. These materials will be allowed to settle for 24 hours. The remainder of the hole will be filled with concrete. The surface of the concrete will be mounded, smoothed, and inscribed with “ABD,” for abandoned, any assigned well or boring designation, and the date the hole was abandoned. All boring logs, samples, completion records, and abandonment procedures will be included in the records of work on the site cluster.

If the well is not within 10 ft of another monitoring well, or if there are no substantial, continuous sand bodies, and no replacement well is planned within 10 ft of the original well location, then the hole may be grouted from the bottom to the top.

3.1 GROUT

Grout used in construction will be composed by weight of:

- 20 parts cement (Portland cement, Type II or V)
- 0.4-1 part (maximum) (2-5 percent) bentonite
- 8 gal (maximum) approved water per 94-lb bag of cement.

Neither additives nor borehole cuttings will be mixed with the grout. Bentonite will be added after the required amount of cement is mixed with the water.

All grout material will be combined in an aboveground container and mechanically blended to produce a thick, lump-free mixture. The mixed grout will be recirculated through the grout pump prior to placement.

Grout placement will be performed using a commercially available grout pump and a rigid tremie pipe removal and grouting will be accomplished in stages, aquifer by aquifer, sealing the boring from the bottom to ground surface. This will be accomplished by placing a grout pipe to the bottom and pumping grout through the pipe until undiluted grout reaches the bottom of the next higher section of casing or, for the top-most section, until grout flows from the boring at ground surface. Efforts will be made to grout incrementally as the temporary casing is removed.

After 24 hours, the abandoned drilling site will be checked for grout settlement. On that day, any settlement depression will be filled with grout and rechecked 24 hours later. This process will be repeated until firm grout remains at the ground surface.

3.2 BORINGS

The term “Borings” as used in this Standard Operating Procedure applies to any drilled hole made during the course of a remedial investigation which is not completed as a well. This includes soil test borings, soil sampling borings, and deep stratigraphic borings. Whether completed to the planned depth or aborted for any reason prior to reaching that depth, borings will be grouted and normally closed within 4 hours, or within 4 hours or completion of logging of completion of logging.

3.2.1 Shallow Borings not Penetrating Water Table

Shallow borings made for the collection of subsurface soil samples will be abandoned by backfilling the hole with cuttings from the hole, **if and only if the boring does not penetrate the water table.** Clean sand will be used to make up any volume not filled by the cuttings.

3.2.2 Borings Penetrating the Water Table

Shallow borings made for the collection of subsurface soil samples **which penetrate the water table** will be abandoned by grouting the hole from the bottom to the top.

3.2.3 Deep Stratigraphic Borings

Deep stratigraphic borings will normally be located in areas which, by virtue of the historical record, are presumed relatively uncontaminated. Therefore, these borings are usually over 100 ft from any sampling well locations. Any boring located within 10 ft of a proposed well location, or located directly upgradient or downgradient (on anticipated flow line) of a proposed well location, will be abandoned by placing clean sand in the aquifer intervals and bentonite or grout in aquitard intervals as described above. If the boring is over 10 ft from and/or not upgradient of a proposed well location, the boring will be completely filled with grout.

3.3 WELLS

The following procedure applies to wells aborted prior to completion and existing wells determined to be ineffective or otherwise in need of closure.

Prior to abandoning any developed well, the proper well licensing body will be provided written notification along with an abandonment plan for that well.

If the well is within 10 ft of another monitoring well in the same aquifer, or a replacement well is to be installed within 10 ft of the well, casing will be pulled, drilled out, or thoroughly pierced. Using tremie pipe, the hole will then be backfilled with filter pack material opposite sand strata and bentonite or grout opposite substantial (2 ft or thicker) clay and silt strata. Where sand as backfill approaches the ground surface, 2 ft of bentonite will be placed above the sand and below the concrete plug near the surface. Backfill materials will be placed from the bottom of the hole to within 3 ft of the ground surface. These materials will be allowed to settle for 24 hours. The remainder of the hole will be filled with concrete. The surface of the concrete will be mounded, smoothed, and inscribed with “ABD,” for abandoned, any assigned well or boring designation, and the date the hole was abandoned. All boring logs, samples, completion records, and abandonment procedures will be included in the records of work on the site cluster.

If the well is not within 10 ft of another monitoring well, and is not to be replaced by another well within 10 ft of the original location, casing will be pulled, drilled out, or thoroughly pierced. Using tremie pipe, grout will be placed from the bottom of the hole to within 3 ft of the ground surface, and allowed to settle for 24 hours. The remainder of the hole will be filled with concrete. The surface of the concrete will be mounded, smoothed, and inscribed with “ABD,” for abandoned, any assigned well or boring designation, and the date the hole was abandoned. All boring logs, samples, completion records, and abandonment procedures will be included in the records of work on the site cluster.

4. REPLACEMENT WELLS

Replacement wells (if any) will normally be offset at least 10 ft from any abandoned well in a presumed upgradient or crossgradient groundwater direction. Site-specific conditions may necessitate variation to this placement.

5. PRECAUTIONS

None.

Standard Operating Procedure No. 035
for
Small Boat Operations

Prepared by

EA Engineering, Science, and Technology, Inc.
11019 McCormick Road
Hunt Valley, Maryland 21031

Revision: 1
August 2010

CONTENTS

Page

1. BACKGROUND 1

   1.1 Purpose 1
   1.2 Scope 1
   1.3 Definitions 1
   1.4 References 1
   1.5 Responsibilities 2

2. SMALL BOAT REQUIREMENTS 2

   2.1 Work Over or Near Water 3
   2.2 Personal Floatation Devices 3
   2.3 Safety Emergency Drill 4
   2.4 Float Plan 4
   2.5 Emergency Plan 4
   2.6 Communications 4
   2.7 Ocean Requirements 4
   2.8 Severe Weather Precautions 4
   2.9 Cold Water and Drowning Hazards 5
   2.10 Job Hazard Analysis 5

APPENDIX A: FLOAT PLAN
APPENDIX B: JOB HAZARD ANALYSIS FORM

1. BACKGROUND

The threat from working on or near surface water bodies comes from both chemical hazards and physical hazards such as drowning. When there is a need for sampling to be conducted using small boats, EA will provide necessary safety gear, i.e., life vests, nets, and other floating devices and appropriate training.

1.1 PURPOSE

This Standard Operating Procedure (SOP) establishes the operating requirements for small boats conducting inland and coastal marine work.

1.2 SCOPE

This SOP applies to the operation of small boats, including launches, motorboats, working platforms, and skiffs, for inland (rivers, lakes, and bays) and coastal marine work. This SOP applies to EA personnel operating a small boat or working on a subcontractor-operated small boat. This SOP covers small boat requirements, work over or near bodies of water, personal floatation devices (PFDs), lifesaving and safety skiffs, severe weather precautions, and cold water and drowning hazards. This SOP is mandatory for EA personnel. Subcontractors are responsible for analyzing the hazards of activities they control and for preparing job hazard analysis and maintaining equivalent safety requirements.

1.3 DEFINITIONS

Small Boat—Includes dinghies, 1- or 2-man rowboats, up to and including larger vessels typically up to 50 ft in length, and work barges.

Float Plan—A written summary of the details of the trip, including route, type of vessel, persons aboard, and other salient information which may be useful in the event of an emergency.

Job Hazard Analysis—A concise analysis of the specific task considering the body of water, vessel, unique job requirements, training and experience of crew, and other circumstances as may be appropriate.

1.4 REFERENCES

EA Corporate Vessel Operations Manual. December 2004.

Federal Requirements and Safety Tips for Recreational Boats. 1994. Boating Education Branch. April.

U.S. Army Corps of Engineers. 2003. Safety and Health Requirements Manual. Volume EM 385-1-1. September.

U.S. Coast Guard. 1994. Federal Requirements and Safety Tips for Recreational Boats.

1.5 RESPONSIBILITIES

The Project Health and Safety Officer is responsible for review and approval of small boat operations as described in the Health and Safety Plan. The Project Health and Safety Officer provides any necessary safety requirements to the project team. The Project Health and Safety Officer shall review the job hazard analysis prepared by project personnel.

Onsite Health and Safety Officer—The Health and Safety Officer is responsible for ensuring proper use of small boats at field locations. The Health and Safety Officer ensures that only trained personnel operate small boats, subcontractors implement safety programs, and that all equipment is properly maintained. The Onsite Safety Officer is responsible for filing or maintaining a float plan.

Small Boat Operators—EA personnel working on small boats will follow this procedure and any applicable health and safety procedures identified in the Health and Safety Plan and the vessel rules. Small boat operators will identify any conflicts in procedures or any problems or equipment failures to the Health and Safety Officer. Small boat operators shall demonstrate training, experience, and compliance with state requirements for operator education and licensing prior to operating any vessel. For larger bodies of water, or rapidly moving water, knowledge of local conditions shall be obtained prior to embarkation.

2. SMALL BOAT REQUREMENTS

All small boats used by EA personnel must meet the minimum requirements in the U.S. Army Corps of Engineers Safety and Health Requirements Manual EM 385-1-1 and the applicable Occupational Safety and Health Administration or state plan requirements, as well as meeting applicable U.S. Coast Guard Regulations. These requirements include the following:

- Small boats will meet the minimum floatation requirements of the U.S. Coast Guard, and must have a certification tag affixed to the hull.
- The maximum number of passengers and weight that may be safely transported must be posted on all small boats.
- The number of personnel on the small boat cannot exceed the number of Type I PFDs onboard.
- Each small boat will have sufficient room freeboard, and stability to safely carry the allowable number of personnel and cargo.

- Each motored boat measuring less than 26 ft in length will carry one 1A-10 BC fire extinguisher; motored boats measuring greater than 26 ft will carry two 1A-10 BC fire extinguishers.

Operators and occupants of small craft shall review Federal Requirements and Safety Tips for Recreational Boats (U.S. Coast Guard 1994) before engaging in work from rafts, dinghies, canoes, rowboats, or Jon boats.

2.1 WORK OVER OR NEAR WATER

Work over or near water, where the potential exists for personnel to fall in and possibly drown, will be conducted in accordance with the requirements of applicable Occupational Safety and Health Administration standards and the U.S. Army Corps of Engineers EM 385-1-1 standards. This includes work from shore, bridges, work platforms, and vessels. Work within 15 ft of unobstructed access to water is within the requirements of this section. Personnel will follow the guidelines listed below except where personnel are protected by continuous guardrails, safety belts, or nets, or are conducting work along beaches or similar shorelines:

- Personnel will use the buddy system at all times.

- Swimming is prohibited, with the following exceptions: (1) certified divers performing their duties, and (2) personnel entering water to prevent injury or loss of life.

- All personnel will wear a U.S. Coast Guard-approved PFD of the type able to support an unconscious person (Type 1 with 32-lb floatation).

- At least one Type IV throwable device (ring buoy, horseshoe buoy) will be available on the small boat. Throwable devices should be U.S. Coast Guard-approved and equipped with 150 ft of 600-lb capacity rope.

- If specified in the Health and Safety Plan, at least one person will provide a dedicated safety watch/look-out.

2.2 PERSONAL FLOATATION DEVICES

All EA personnel will wear a U.S. Coast Guard-approved, Type 1 PFD when working over or near bodies of water. PFDs should meet the following requirements:

- Before and after each use, the PFD will be inspected for defects that would alter its strength or buoyancy.

- All PFDs will be equipped with retro reflective tape.

PFDs need not be donned when working on larger craft (>26 ft) except when working over water or outside railing. PFDs should be worn at all times when working on smaller craft.

2.3 SAFETY EMERGENCY DRILL

The vessel operator shall provide a list of crew duties for normal operations and emergencies. Emergencies which shall be covered include man-overboard, vessel fire, and vessel emergency.

The vessel operator shall provide an orientation and emergency drill. An emergency drill shall be conducted at the start of each task, and monthly thereafter, or as provided for in U.S. Coast Guard regulations.

2.4 FLOAT PLAN

A float plan provides essential information to enable the U.S. Coast Guard or other emergency search and rescue teams to initiate a search in the event of personnel not reporting in on schedule. The vessel operator will file a daily float plan with the site representative and with the project health and safety representative listed in the Health and Safety Plan. Upon daily completion of on-water work, the vessel operator will check in with the designated on shore individual. The float plan is provided in Appendix A.

2.5 EMERGENCY PLAN

The emergency plan should list a main dock and an alternate dock, and provide emergency medical support contact for each location.

2.6 COMMUNICATIONS

A marine VHF radio shall be maintained onboard and in operable condition. At least one of the boat personnel shall have a mobile telephone onboard during operations.

2.7 OCEAN REQUIREMENTS

Contact the Corporate Health and Safety Officer and Project Health and Safety Officer prior to planning any work which requires work in open ocean.

2.8 SEVERE WEATHER PRECAUTIONS

During field operations involving small boats, EA personnel will make provisions for severe weather. Severe weather includes sudden and locally severe storms, high winds, hurricanes, and floods. Before beginning work over water, the Health and Safety Officer will evaluate weather reports and conditions to ascertain local weather and prevent personnel exposure to severe weather. In the event that severe weather is encountered, personnel will cease field operations and immediately return to shore.

2.9 COLD WATER AND DROWNING HAZARDS

EA personnel conducting field operations with a small boat may be exposed to cold water and drowning hazards. When water temperature is below 45°F, hypothermia is a serious hazard. A person can lose feeling in extremities within 5 minutes. Under no circumstances will EA personnel enter the water from a small boat unless conducting diving operations or performing a rescue.

Symptoms of hypothermia are discussed during standard first aid training and in the EA Health and Safety Program Plan. If a person who has fallen into the water displays symptoms of hypothermia, he or she should be treated immediately and the field operations canceled. Under no circumstances should the victim be given hot liquids, since they can accelerate shock. Drinks no warmer than body temperature are acceptable. If symptoms are severe and rapid evacuation is not possible, remove the victim's wet clothing and cover the victim with a blanket. Continue to treat the victim for shock.

When a high risk of cold water and drowning hazards exists, all field staff members should be familiar with cold water survival techniques. If a team member falls into the water, he or she should not remove any clothing in the water because all clothing will provide insulation. Although clothing creates added drag while swimming, the added insulation of the clothing outweighs the disadvantage of the additional drag.

If a team member falls into the water, another team member should try to reach the person in the water with an oar, paddle, pole, or similar object. The victim should try to grab the extended item. If the victim is unconscious, the rescuer should try to hook the victim's PFD, clothing, or hair and pull him or her toward the boat. Once the victim is retrieved, the other team members should begin any necessary emergency medical procedures. If no emergency medical procedures are necessary, the victim should change into dry clothing.

2.10 JOB HAZARD ANALYSIS

The requirements for preparing a job hazard analysis apply specifically to all on-water operations. Appendix B provides a sample job hazard analysis; however, an actual job hazard analysis shall consider the specific task including the body of water, vessel type, unique job requirements, training and experience of crew, and other circumstances such as tides, weather, water temperature, access of rescue craft, and other factors as may be appropriate. Job hazard analysis must be prepared specifically for each task and crew in accordance with the U.S. Army Corps of Engineers Safety and Health Requirements Manual EM 385-1-1.

Appendix A

Float Plan

APPENDIX A

FLOAT PLAN

1 Name and phone number of person filing plan.

2 Description of boat (type, color, trim, registration number, length, name, make, other).

3 Engine type (horsepower, fuel capacity, number of engines, and fuel [diesel or gasoline]).

4. Survival—Equipment onboard (check):

- Anchor
- Flares
- Flashlight
- Food
- Life ring with 150 ft of line.
- Paddles
- PFDs
- Smoke signals
- Water.

5. Marine Radio onboard (type, frequencies):

6. Automobile (tag number, type, color, make, trailer tag number, where parked)

7. Persons aboard (name, affiliation, and telephone number)

8. Do any of the persons aboard have a medical problem (identify type)

9. Trip plan (depart from @ time, arrive to @ time; via waypoints; expect to return no later than time)

10. Operational area (attach map)

11. If not returned by (a.m./p.m. time), call the U.S. Coast Guard or onshore contact.

12. Onshore contact:

Alternate Other Numbers

Contact	Number

Appendix B

Job Hazard Analysis Form

APPENDIX B

JOB HAZARD ANALYSIS FORM

Activity Hazard Analysis		
Task	**Potential Hazards**	**Hazard Control Measures**
MOBILIZATION/ DEMOBILIZATION	Physical Hazards (slips, trips, falls, cuts, etc.)	• Clear walkways/work areas of equipment, tools, and debris. • Watch for accumulation of water work surfaces. • Mark, identify, or barricade obstructions. • Wear cut-resistant work gloves when the possibility of lacerations or other injury caused by sharp or protruding objects occurs.
	Physical Hazards (material handling moving, lifting)	• Observe proper lifting techniques. • Obey sensible lifting limits (60-lb maximum per person manual lifting). • Use mechanical lifting equipment (hand carts, trucks, etc.) to move large awkward loads. • Use two or more persons for heaving bulk lifting.
	Physical Hazards (vehicle and pedestrian traffic)	• Use orange traffic cones where necessary. • Use reflective warning vests if exposed to vehicular traffic. • Locate staging areas in locations with minimal traffic.
	Physical Hazards (cold/heat stress)	• Monitor cold/heat stress as recommended in Section 6 of the Generic Health and Safety Plan.
	Munitions and Explosives of Concern (MEC) Hazard	• Practice site reconnaissance with a trained, experienced MEC specialist capable of recognizing MEC hazards. • If MEC is discovered, use existing access roads to retract from the MEC.
	Biological Hazards (insects, poisonous plants, ticks)	• Wear protective outer clothing and insect repellant to avoid insect bites and ticks. • Wear long sleeve shirts when working in areas with poison ivy or oak. • Workers with allergies should carry antidote kits, if necessary.
SAMPLING ACTIVITIES	Physical Hazards (slips, trips, falls, cuts, etc.)	• Clear walkways/work areas of equipment, tools, and debris. • Watch for accumulation of water work surfaces. • Mark, identify, or barricade obstructions. • Wear cut-resistant work gloves when the possibility of lacerations or other injury caused by sharp or protruding objects occurs.
	Physical Hazards (electrical)	• Identify electrical utility hazards prior to sampling. • Inspect work areas for spark sources, maintain safe distances, properly illuminate work areas, and provide barriers to prevent inadvertent contact. • Maintain minimum clearance distances for overhead energized electrical lines as specified in the Generic Health and Safety Plan.
	Physical Hazards (weather)	• Monitor radio for up-to-date severe weather forecasts. • Discontinue work during thunderstorms and severe weather events.
	Physical Hazards (vehicle and pedestrian traffic)	• Establish an exclusion zone around the drilling location. • Use orange traffic cones (if necessary). • Use reflective warning vests if exposed to vehicular traffic. • Locate staging areas in locations with minimal traffic.

Activity Hazard Analysis		
Task	**Potential Hazards**	**Hazard Control Measures**
SAMPLING ACTIVITIES (continued)	Physical Hazards (cold/heat stress)	• Monitor cold/heat stress as recommended in Section 6 of the Generic Health and Safety Plan.
	MEC Hazards	• Follow established MEC avoidance protocols when performing intrusive sampling activities. • If MEC is discovered or suspected, use existing access roads to retract from the MEC.
	Chemical Hazards (including MEC)	• Perform environmental monitoring as required in the Site-Specific Health and Safety Plan. • Where appropriate, personal protective equipment as indicated in the Site-Specific Health and Safety Plan.
	Biological Hazards (bloodborne pathogens)	• Wear proper personal protective equipment, including nitrile gloves and a face shield or goggles when sampling sludge. • Wash with soap and water as soon as personal protective equipment is removed or when contact or exposure has occurred.
	Biological Hazards (insects, poisonous plants, and ticks)	• Wear protective outer clothing and insect repellant to avoid insect bites and ticks. • Wear long sleeve shirts when working in areas with poison ivy or oak. • Worker with allergies should carry antidote kits, if necessary.
BOATING ACTIVITIES	Physical Hazards (weather)	• Monitor radio for up-to-date severe weather forecasts. • Boat operators will be trained by the site supervisor and/or the senior boat operator. • Discontinue work during thunderstorms and severe weather events.
	Physical Hazard (slips, trips, and falls, including falls overboard)	• Boat operator will inspect the boat prior to operation. The operator will ensure the number of personal floatation devices is equal to or greater than the number of passengers onboard. • No personnel will embark or disembark the vessel without the direction of the vessel operator. Vessel operator will ensure passengers are wearing personal floatation devices while on deck. At the request of the operator, personnel will be seated. • Passengers will stay seated until boat is docked. Ensure three-point contact whenever possible or practical. • A Type IV throwable device will be readily available onboard.

Standard Operating Procedure No. 036
for
Turbidity Measurements (DRT 100)

Prepared by

EA Engineering, Science, and Technology, Inc.
11019 McCormick Road
Hunt Valley, Maryland 21031

Revision 0
August 2007

CONTENTS

Page

1. SCOPE AND APPLICATION 1

2. MATERIALS 1

3. PROCEDURE 1

4. MAINTENANCE 3

5. PRECAUTIONS 3

6. REFERENCES 3

1. SCOPE AND APPLICATION

The purpose of this Standard Operating Procedure (SOP) is to delineate protocols for measuring the turbidity of all types of aqueous solutions, including drinking water, saline water, and industrial and domestic wastes. Turbidity is an indication of the optical properties that cause light to be scattered or absorbed through an aqueous sample. Turbidity is largely a function of the refractive index and the size and shape of the particles suspended or dissolved in the solution. Turbidity meters do not produce an "absolute" measurement, but one that is "relative" to the optical nature of the solids in solution.

Use of brand names in this SOP is not intended as endorsement or mandate that a given brand be used. Alternate equivalent brands of detectors, sensors, meters, etc. are acceptable. If alternate equipment is to be used, the contractor will provide applicable and comparable SOPs for the maintenance and calibration of same.

2. MATERIALS

The following materials may be required:

Turbidity meter (DRT 100 or equivalent)
Lint free laboratory wipes (Kimwipes or equivalent)
Formazin standards (from manufacturer)
Sample bottle
Cuvettes

3. PROCEDURE

Calibration of the turbidity meter will be checked on a daily basis as follows:

- Set the range switch to 1000 range before turning the turbidity meter on and whenever the light shield is not in place over the sample well.
- Allow the turbidity meter 15-60 minutes to warmup.
- Clean the reference standard with kimwipes.
- Place the formazin suspension or reference standard in the turbidity meter sample well.
- Place the light shield over the reference standard.
- Rotate the front panel range switch counterclockwise to the appropriate nephelometric turbidity unit range.

- Adjust the reference adjust knob counterclockwise to read the same value as the reference standard value. This value is stamped on top of the reference standard.
- The turbidity meter is now standardized on all ranges to the factory formazin calibration and unknown samples may be read directly in nephelometric turbidity unit, feeder terminal unit, or Jackson turbidity unit.
- Rotate the range switch clockwise to the 1000 range before removing the reference standard.
- Record reading in field logbook (Refer to SOP Nos. 003 and 016).
- Do not leave the reference standard in the sample well for long periods.

Turbidity will be measured as follows:

- Pour aqueous sample into a new cuvette assuring no air bubbles.
- Place the cuvette into the sample well.
- Place the light shield over the sample.
- Rotate the range switch counterclockwise to the range which provides best readability and sensitivity for the sample being measured.
- Allow the turbidity meter to stabilize before recording the nephelometric turbidity unit value.
- Turn the range switch clockwise to the 1000 range and then remove the sample.
- Do not leave the filled cuvette in the sample well for long periods.
- Repeat above steps for additional samples.

Cuvette cleaning procedure is as follows:

- Cuvette must be clean and free of rubs or scratches.
- Wash the cuvette in a detergent solution.
- Rinse thoroughly 8-10 times, preferably with distilled water to remove all streaks.
- Polish with kimwipes.
- Cuvettes must be stored in a clean dust-free environment.

4. MAINTENANCE

Source lamp may be replaced as follows:

- Remove the instrument case per manufacturer instruction.
- Remove the bulb by loosening a screw and removing the electrical leads.
- Insert the new bulb and reconnect the electrical leads.
- Before tightening the screw, be sure to position the filament so that it will be parallel to the axis of the sample well.
- Insert the lamp alignment tool in the sample well to focus the new bulb.
- Move the lamp bracket assembly in or out until a focused image of the filament is within the rectangular box on the lamp alignment tool.
- Once the filament image has been aligned and focused within the rectangular box on the lamp adjustment tool, tighten all screws snugly.
- Replace the instrument case.

5. PRECAUTIONS

Handle the reference standard or sample cuvettes by the top to prevent surface scratches or finger smudges which will cause analysis errors.

Check the mechanical meter zero when the instrument is in a vertical position and the power switch is off. Adjust to zero only if necessary by means of the black screw on the meter face.

The turbidity meter should be left on for the entire work shift to minimize warm-up and recalibration delays.

Do not leave the reference standard or filled curvette in the sample well for long periods.

Leave the light shield in place on the instrument when it is not in use in order to protect the sample well for long periods.

Always set the range switch to 1000 range before turning the instrument on and whenever the light shield is not in place over the well.

6. REFERENCES

Manufacturer's Manual.

Standard Operating Procedure No. 037
for
Dissolved Oxygen Measurements
(YSI Model 57)

Prepared by

EA Engineering, Science, and Technology, Inc.
11019 McCormick Road
Hunt Valley, Maryland 21031

Revision 0
August 2007

CONTENTS

Page

1. SCOPE AND APPLICATION 1

2. MATERIALS 1

3. PROCEDURE 1

3.1 Setup 1
3.2 Calibration 2
3.3 Dissolved Oxygen Measurement 2

4. MAINTENANCE 3

5. PRECAUTIONS 3

6. REFERENCES 3

1. SCOPE AND APPLICATION

The purpose of this Standard Operating Procedure (SOP) is to delineate protocols for measuring the dissolved oxygen (DO) of all types of aqueous solutions, including drinking water, saline water, and industrial and domestic wastes. DO is a measurement of the amount of soluble oxygen in an aqueous solution. It is a general indication of an aerobic/anaerobic condition of a water sample.

Use of brand names in this SOP is not intended as endorsement or mandate that a given brand be used. Alternate equivalent brands of detectors, sensors, meters, etc. are acceptable. If alternate equipment is to be used, the contractor will provide applicable and comparable SOPs for the maintenance and calibration of same.

2. MATERIALS

The following materials may be required:

DO meter (YSI Model 57 or equivalent)
Self-stirring biological oxygen demand bottle probe
Membrane standards
Biological oxygen demand bottle

3. PROCEDURE

3.1 SETUP

It is important that before the meter is prepared for use and calibrated, it should be placed in the intended operating position, i.e., vertical, tilted, or horizontal. The instrument may need readjustment if the operating position is altered. The setup procedures should be as follows:

- With the switch set to **OFF**, adjust the meter pointer to zero with the screw in the center of the meter panel.
- Switch to **RED LINE** and adjust the **RED LINE** knob until the meter needle aligns with the red mark if necessary.
- Switch to **ZERO** and adjust to 0 mg/L scale with the **ZERO** control knob.
- Attach the prepared probe to the **PROBE** connector of the instrument and adjust the retaining ring finger tight.
- Before calibrating, allow 15 minutes for optimum probe stabilization. Repolarize whenever the instrument has been **OFF** or the probe has been disconnected.

3.2 CALIBRATION

Calibration is accomplished by exposing the probe to a known oxygen concentration, such as water-saturated air (%), or water of a known oxygen content (mg/L), and then adjusting the calibration controls so the display shows a reading matching the oxygen concentration of the known sample. Calibration can be disturbed by physical shock, touching the membrane, and fouling of the membrane or drying out of the electrolyte. Calibration will be checked after each series of measurements. Calibration of the DO meter will be performed on a daily basis as follows:

1. Place the probe in moist air. Biological oxygen demand probes can be placed in partially filled (50 ml) biological oxygen demand bottles. Wait 10 minutes for temperature to stabilize ± 2°C.

2. Switch to **TEMPERATURE** and read. Refer to Table SOP037-1 for solubility of oxygen in fresh water (calibration value).

3. Determine altitude or atmospheric correction factor from Table SOP037-2.

4. Multiply the calibration value from Table SOP037-1 by the correction factor from Table SOP037-2 to obtain the correct calibration value.

   EXAMPLE: Assume a temperature of 20°C and an altitude of 1,100 ft. From Table SOP037-1, the calibration value of 20°C is 9.09 mg/L. From Table SOP037-2, the correction factor for 1,100 ft is 0.96. Therefore, the corrected calibration value is 9.09 mg/L × 0.96 = 8.73 mg/L.

5. Switch to the appropriate mg/L range, set the **SALINITY** knob to zero and adjust the **CALIBRATE** knob until the meter reads the calibration value from Step 4. Wait 2 minutes to verify calibration stability. Readjust if necessary.

3.3 DISSOLVED OXYGEN MEASUREMENT

- With the instrument prepared for use and the probe calibrated, place the probe in the sample.

- Turn the **STIRRER** knob **ON**.

- Adjust the **SALINITY** knob to the salinity of the sample if appropriate.

- Allow sufficient time for the probe to equilibrate to the sample temperature and DO.

- Read DO on appropriate scale.

- Before measuring the DO of the next sample, rinse probe and sample bottle with distilled water and then with next water sample.

Follow steps above for the next sample(s).

The DO meter should normally be left on during the working day to avoid the delay of waiting for probe repolarization.

4. MAINTENANCE

The following steps will be taken to maintain the DO meter:

- Replace the batteries when the **RED LINE** knob is at its extreme adjustment or at least annually.

- In the **BATT CHECK** position on the **STIRRER** knob, the voltage of the stirrer batteries is displayed on the red **0-10** scale. Do not permit them to discharge below 6 volts.

- Replace membrane every 2 weeks depending on application. Probes will be stored in a humid environment to prevent drying out.

5. PRECAUTIONS

The DO meter case is water resistant when properly closed. As a precaution against damaged gaskets or loose fittings, the instrument case will be opened and inspected for moisture whenever the instrument has been subjected to immersion or heavy spray. The case is opened by removing the screws on the rear cover an lifting the cover off.

6. REFERENCES

Manufacturer's handbook.

TABLE SOP037-1 SOLUBILITY OF OXYGEN IN WATER EXPOSED TO WATER SATURATED AIR AT 760 mm Hg PRESSURE

Temperature (°C)	Solubility (mg/L)	Temperature (°C)	Solubility (mg/L)	Temperature (°C)	Solubility (mg/L)
0	14.62	17	9.67	34	7.07
1	14.22	18	9.47	35	7.95
2	13.83	19	9.28	36	7.84
3	13.46	20	9.09	37	6.73
4	13.11	21	8.92	38	6.62
5	12.77	22	8.74	39	6.52
6	12.45	23	8.58	40	6.41
7	12.14	24	8.42	41	6.31
8	11.84	25	8.26	42	6.21
9	11.56	26	8.11	43	6.12
10	11.29	27	7.97	44	6.02
11	11.03	28	7.83	45	5.95
12	10.78	29	7.69	46	5.84
13	10.54	30	7.56	47	5.74
14	10.31	31	7.43	48	5.65
15	10.08	32	7.31	49	5.56
16	9.87	33	7.18	50	5.47

NOTE: Derived from 17th Edition, Standard Methods for the Examination of Water and Wastewater.

TABLE SOP037-2 CALIBRATION VALUES FOR VARIOUS ATMOSPHERIC PRESSURES AND ALTITUDES

Pressure			Altitude in		Calibration Value(%)
in. Hg	mm Hg	kPa	feet	meter	
30.23	768	102.3	-276	-84	101
29.92	760	101.3	0	0	100
29.61	752	100.3	278	85	99
29.33	745	99.3	558	170	98
29.02	737	98.3	841	256	97
28.74	730	97.3	1126	343	96
28.43	722	96.3	1413	431	95
28.11	714	95.3	1703	519	94
27.83	707	94.2	1995	608	93
27.52	699	93.2	2290	698	92
27.24	692	92.2	2587	789	91
26.93	684	91.2	2887	880	90
26.61	676	90.2	3190	972	89
26.34	669	89.2	3496	1066	88
26.02	661	88.2	3804	1160	87
25.75	654	87.1	4115	1254	86
25.43	646	86.1	4430	1350	85
25.12	638	85.1	4747	1447	84
24.84	631	84.1	5067	1544	83
24.53	623	83.1	5391	1643	82
24.25	616	82.1	5717	1743	81
23.94	608	81.1	6047	1843	80
23.62	600	80.0	6381	1945	79
23.35	593	79.0	6717	2047	78
23.03	585	78.0	7058	2151	77
22.76	578	77.0	7401	2256	76
22.44	570	76.0	7749	2362	75
22.13	562	75.0	8100	2469	74
21.85	555	74.0	8455	2577	73
21.54	547	73.0	8815	2687	72
21.26	540	71.9	9178	2797	71
20.94	532	70.9	9545	2909	70
20.63	524	69.9	9917	3023	69
20.35	517	68.9	10293	3137	68
20.04	509	67.9	10673	3253	67
19.76	502	66.9	11058	3371	66

NOTE: Derived from 17th Edition, Standard Methods for the Examination of Water and Wastewater.

Standard Operating Procedure No. 038
for
Redox Potential Measurements

Prepared by

EA Engineering, Science, and Technology, Inc.
11019 McCormick Road
Hunt Valley, Maryland 21031

Revision 0
August 2007

CONTENTS

Page

1. SCOPE AND APPLICATION 1

2. MATERIALS 1

3. PROCEDURE 1

4. MAINTENANCE 2

5. PRECAUTIONS 2

6. REFERENCES 2

1. SCOPE AND APPLICATION

The purpose of this Standard Operating Procedure is to delineate protocols for measuring the redox of flooded sediment and soil. Redox is an indication of the reduction of oxidation intensity of an anaerobic system. Redox will be expressed in mV. A complete anaerobic system redox potential is -150 Mv. A positive value indicates an aerobic system.

Redox measurement in a natural system is difficult to obtain due to the absence of true equilibria, heterogeneity of media, and pH effects deprived redox measurements in natural media of precise thermodynamic significance (Ponnamperuma 1972). Despite the difficulties involved in the redox measurements in natural media, it is widely accepted that redox readings in natural anaerobic systems can provide valuable environmental information. Whitfield found redox useful as a semi-quantitative indicator of the degree of stagnation of a particular aquatic environment as did Ponnamperuma for flooded soils and sediments. The redox measurements of natural waters are not representative of that median, since natural waters are in a highly dynamic state rather than in or near equilibrium, according to Stumm and Morgan 1970. It is generally recognized that redox measurements in oxygenated natural waters are invalid.

2. MATERIALS

The following materials may be required:

pH meter	Sample bottle
Combination pH electrode	Standard solution (pH 4 and 7 buffers saturated with quinhydrone)
Lint-free laboratory wipes (Kimwipes, or equivalent)	Wash bottle
Distilled water	

3. PROCEDURE

Calibration of the pH meter will be calibrated on a daily basis as follows.

- Prepare beaker of standard solution with known voltage(s)
- Connect electrodes to instrument
- Turn on and clear
- Rinse electrode with distilled water blot excess with laboratory wipes
- Immerse probe in beaker of standard solution
- Press mV key
- After the reading stabilizes, the absolute mV of solution is displayed.
- Rinse electrode and blot excess.

Redox will be measured after calibration as follows:

- Prepare sample in a beaker
- Rinse electrode and blot excess water
- Immerse electrode in sample and stir briefly
- Press mV switch
- Record the reading after it stabilizes
- For next sample(s), follow above steps.

4. MAINTENANCE

Check the batteries each time the meter is used.

Keep the probe stored in a 0.1 M KCL solution when not in use. Alternatively, the electrode may be rinsed with deionized water and trapping any residual water inside the protective cap.

5. PRECAUTION

Remove coatings of oil material or particulate matter that can impair electrode response by gentle wiping or detergent washing, followed by distilled water rinsing.

6. REFERENCES

Beckman Instruments, Inc. User Manual for 10, 11, and 12 pH/ISE meter.

Ponnamperuma, F.N. 1972. The Chemistry of Submerged Soils, Advances in Agronomy. Vol. 24.

Stumm, W. and J.J. Morgan. 1970. Aquatic Chemistry, Wiley, New York.

Whitfield, M. 1969. Eh as an Operational Parameter in Estuarine Studies. *Limnol. Oceanogr*., Vol. 14.

Standard Operating Procedure No. 039
for
Sample Preservation and Container Requirements

Prepared by

EA Engineering, Science, and Technology, Inc.
11019 McCormick Road
Hunt Valley, Maryland 21031

Revision 0
August 2007

CONTENTS

Page

1. PURPOSE AND SCOPE 1

2. MATERIALS 1

3. DEFINITION OF CONTAINER TYPES 1

4. PROCEDURE 2

5. MAINTENANCE 3

6. PRECAUTIONS 3

7. REFERENCES 3

1. PURPOSE AND SCOPE

The purpose of this Standard Operating Procedure (SOP) is to define the preservatives and techniques to be employed in preserving environmental samples between collection and analysis.

2. MATERIALS

The following materials may be required:

Containers (see Section 3 for description)	NaOH
HNO_3	Ice chests
H_2SO_4	Ice

3. DEFINITION OF CONTAINER TYPES

Type A **Container**: 80 oz amber glass, ring handle bottle/jug, 38-mm neck finish.
Closure: White polypropylene or black phenolic, baked polyethylene cap, 38-430 size, 0.015-mm polytetrafluoroethelyne (PTFE) liner.

Type B **Container**: 40-mL glass vial, 24-mm neck finish
Closure: White polypropylene or black phenolic, open top, screw cap, 15-mm opening, 24-400 size.
Septum: 24-mm disc of 0.005-in PTFE bonded to 0.120-in. silicon for total thickness of 0.125-in.

Type C **Container**: 1-L high density polyethylene, cylinder-round bottle, 28-mm neck finish.
Closure: White polyethylene cap, white ribbed, 28-410 size; F217 polyethylene liner.

Type D **Container**: 120-mL wide mouth glass vial, 48-mm neck finish.
Closure: White polyethylene cap, 40-480 size; 0.015-mm PTFE liner.

Type E **Container**: 250-mL boston round glass bottle
Closure: White polypropylene or black phenolic, open top, screw cap.
Septum: Disc of 0.005-in PTFE bonded to 0.120-in silicon for total thickness of 0.125-in.

Type F **Container**: 8-oz short, wide mouth, straight-sided, flint glass jar, 70-mm neck finish.
Closure: White polypropylene or black phenolic, baked polyethylene cap, 48-400 size; 0.030-mm PTFE liner.

Type G **Container**: 4-oz tall, wide mouth, straight -sided, flint glass jar, 48-mm neck finish.
Closure: White polypropylene or black phenolic, baked polyethylene cap, 48-400 size; 0.015-mm PTFE liner.

Type H **Container**: 1-L amber, Boston round, glass bottle, 33-mm pour-out neck finish.
Closure: White polypropylene or black phenolic, baked polyethylene cap, 33-430 size; 0.015-mm PTFE liner.

Type K **Container**: 4-L amber glass ring handle bottle/jug, 38-mm neck finish.
Closure: White polypropylene or black phenolic, baked polyethylene cap, 38-430 size; 0.015-mm PTFE liner.

Type L **Container**: 500-mL high-density polyethylene, cylinder bottle, 28-mm neck finish.
Closure: White polypropylene, white ribbed, 28-410 size; F217 polyethylene liner.

4. PROCEDURE

All containers must be certified clean, with copies of laboratory certification furnished upon request.

Water samples will be collected into pre-preserved containers appropriate to the intended analyte as given in Quality Assurance Project Plan. Samples taken for volatile organic compounds will be collected in accordance with SOP No. 003, Section 3.3.8. Samples taken for metals analysis will be verified in the field to a pH <2. The container should be tightly capped, then swirled to thoroughly mix the sample. The cap will then be loosened to release any excess pressure this operation may have generated. Samples taken for total phosphorous content will be verified in the field to a pH <2. The container should be tightly capped and swirled to thoroughly mix the sample. The cap will then be loosened to release any excess pressure this operation may have generated. Samples taken for cyanide will be verified for a pH >12. No preservatives will be added to any other water samples. These samples will be immediately placed on ice and cooled to 4°C.

Soil and sediment samples will be collected into containers appropriate to the intended analyte as given in the Quality Assurance Project Plan. Samples taken for volatile organic compound analysis will collected in accordance with the site-specific SOP. Samples taken for metals

analysis will be tightly capped, placed on ice, and maintained at a temperature of 4°C. Samples taken for total phosphorous content will be tightly capped, placed on ice, and maintained at a temperature of 4°C. Samples taken for cyanide will be alkalized to a pH > 12 by the addition of NaOH. No preservatives will be added to any other soil samples. These samples will be immediately placed on ice and cooled to 4°C.

5. MAINTENANCE

Not applicable.

6. PRECAUTIONS

Note that acidifying a sample containing cyanide may liberate HCN gas.

- Avoid breathing any fumes emanating from acidified samples.
- Acidify samples only in the open, rather than in closed spaces such as a vehicle.
- Hold suspected HCN-generating sample away from body and downwind while manipulating it.
- See the Health and Safety Plan for other safety measures

7. REFERENCES

U.S. Environmental Protection Agency (U.S. EPA). 1986. Test Methods for Evaluating Solid Waste, SW-845.

U.S. EPA. 1987. A Compendium of Superfund Field Operations Methods, EPA 540-P87-001.

U.S. EPA. 1991. A Compendium of ERT Soil Sampling and Surface Geophysics Procedures.

Standard Operating Procedure No. 042
for
Disposal of
Investigation-Derived Material

Prepared by

EA Engineering, Science, and Technology, Inc.
11019 McCormick Road
Hunt Valley, Maryland 21031

Revision 0
August 2007

CONTENTS

Page

1. SCOPE AND APPLICATION 1

2. MATERIALS 1

3. PROCEDURE 1

3.1 General 1
3.2 Procedures for Liquid Investigation-Derived Material Disposal 2
3.3 Procedure for Solid Investigation-Derived Material Disposal 3
3.4 Procedures for Decontamination Solution and Personal Protective Equipment Disposal 5

4. MAINTENANCE 6

5. REFERENCES 6

1. SCOPE AND APPLICATION

The purpose of this Standard Operating Procedure is to define the required steps for disposing of investigation-derived material (IDM) generated during field activities.

IDM, as used herein, includes soil cuttings, drilling muds, purged groundwater, decontamination fluids, and disposable personal protective equipment. For the sake of clarity and ease in use, this Standard Operating Procedure is subdivided into procedures for disposal of liquid IDM and solid IDM as follows:

- Liquid IDM (Section 3.2) includes the following materials:
  - Water from initial development of new wells and the redevelopment of existing wells.
  - Purge water from groundwater sampling.
  - Decontamination fluids (Section 3.4)
- Solid IDM (Section 3.3) consists of the following materials:
  - Drill cuttings from monitoring well installation
  - Grout, a mixture of cement and bentonite, generated during installation of monitoring wells
  - Disposable personal protective equipment (Section 3.4).

2. MATERIALS

The following materials may be required:

Any additional equipment that may be dictated by project or site-specific plans	Hazardous waste labels
Bar codes	Permanent marker
Chain-of-custody forms	Field Logbook (bound)
Department of Transportation 17C spec. metal containers	Waste identification labels

3. PROCEDURE

3.1 GENERAL

No container will be labeled as a “Hazardous Waste” unless the contents are in fact known to be hazardous as defined by 40 CFR 261.

IDM may be disposed onsite if it is: (1) initially screened, or evaluated to determine whether it is contaminated; (2) not abandoned in an environmentally unsound manner; and (3) not inherently waste-like.

IDM are to be considered contaminated if they: (1) are visually or grossly contaminated, (2) have activated any field monitoring device which indicates that the level exceeds standard Level 1, (3) have previously been found to exhibit levels of contamination above environmental quality standards, and (4) the responsible party and/or appropriate regulator deem(s) that records of historical uses indicate that additional testing of the IDM is needed, or additional caution is warranted handling IDM from a given site.

3.2 PROCEDURES FOR LIQUID INVESTIGATION-DERIVED MATERIAL DISPOSAL

1. All water from initial development of new wells, and purge water generated during the first round of groundwater sampling will be containerized in Department of Transportation approved 55-gal drums. Decontamination fluids may be bulk-containerized until completion of field task.

2. Label all containers as to type of media, the date the container was sealed, the point-of-generation, and the points-of-contact. The well number and container number will be identified on the container.

3. The contractor/support personnel will log all media generated onsite into a bound Field Logbook. Media information should include the following: the date of generation, contents of containers, the number of containers with the same contents (if applicable), location of containers, the well number the media is associated with, personnel sampling the media, sampling dates, and sampling results.

4. Containers of well development water and purge water may be stored at the well site pending first round analytical results.

5. Laboratory turnaround time must be no greater than 30 days. Upon receipt of the analytical results, a copy will be furnished to the client within 3 working days. Both the client and contractor will evaluate the data to determine disposal requirements, per state and local regulations. A disposal decision is required within 10 days of receipt of sampling results. Appropriate disposal must be performed no later than 50 days from the decision date unless prevented by inclement weather (e.g., rain and muddy conditions may preclude site access, freezing weather may freeze media).

---

1. This value is defined as two times background, where “background” values are to be determined as follows: (1) regional background values will be used where they are available; and (2) if regional values are not available, background may be empirically determined at uncontaminated sampling sites using onsite sensors such as organic vapor analyzers (photoionization detector or flame ionization detector), scintillometers, etc.

Dispose of non-hazardous media in accordance with Step 6 et seq. through 8 et seq. of this procedure.

Dispose of hazardous waste in accordance with Step 9 et seq. of this procedure.

6. If the first round analytical data of the liquid media is below the Maximum Contaminant Levels established by the Federal Safe Drinking Water Act, the water may be gradually infiltrated into the ground at least 50 ft downgradient of the well.

   If the well location has no downgradient area, the water will be infiltrated into the ground in an area deemed appropriate by the client and the contractor/support personnel.

   Disposal locations must allow percolation of the water and prohibit "ponding."

   Upon completion of water discharge to ground, enter type of media, amount of media, date of disposal, and discharge point(s) in a bound Field Logbook and provide this information to the client.

   Empty containers are to be properly decontaminated, stored, and reused by the appropriate personnel.

   If the liquid media sampling results do not meet the required Maximum Contaminant Levels and cannot be discharged to the ground, then determine if the waste meets the sanitary sewer discharge criteria (National Pollutant Discharge Elimination System standards).

7. If at any time visual contamination of purge/development water is observed, or if organic vapor monitor readings (HNu, photoionization detector) register more than 5 ppm above background and/or rad meters register more than twice the background mrems, then the liquid will be drummed and a composite sample will be taken that day. A disposal decision will be based on the analytical results of this sample rather than the first round of analytical results.

3.3 PROCEDURE FOR SOLID INVESTIGATION-DERIVED MATERIAL DISPOSAL

1. If the conditions outlined in Section 3.1 are met, proceed to Section 3.3, Step 2; otherwise, go to Section 3.3, Step 7.

2. During drilling operations, the resulting cuttings and mud will be discharged onto the ground near the well if the following conditions are met: (1) no visual contamination is observed, (2) organic vapors are less than 5 ppm above background, (3) rad meter readings (if applicable) are under two times background, and (4) if the potential for metals contamination exists, the medium has been screened and found to be less than two times background.

Proper sediment and erosion control measures will be implemented as follows:

- Drill cuttings will be uniformly spread and contoured to blend with the surroundings of the site.
- If amount of solid IDM exceeds 5,000 ft^2 or 100 yd^3 of material, a Sediment and Erosion Control Plan is required.
- If the amount of solid IDM is under 5,000 ft^2 or 100 yd^3, the site will be stabilized as soon as possible. Stabilization includes mulch, seed, and tack.
- Critical areas require stabilization within 7 days from the date of well completion. Critical areas include swales, water sources, drainage ditches, etc.
- All other disturbed areas require stabilization within 14 days from the date of well completion.

3. If the well location is in or near a wetland, the drill cuttings will be drummed and transported away from the site for spreading.

4. Label all IDM containers that will not be spread on the day of generation. Each container should be labeled with the type of media, the date the container was sealed, the point-of-generation, and the name of the contact person. The well number and container number should be identified on the container.

5. The contractor/support personnel will log all media generated onsite into a bound Field Logbook. Media information should include: the date of generation, contents in containers, the number of containers with the same contents, location of containers, and the well number the media is associated with.

6. Containers will be staged at the well site until contractor/support personnel spread the cuttings in the appropriate locations, using proper sediment and erosion control measures per Section 3.3 et seq.

7. If drilling mud and cuttings show visible contamination, or organic vapor readings are more than 5 ppm above background levels, or rad meter readings (if applicable) show greater than two times background levels, media will immediately be containerized, labeled appropriately (Section 3.2), and sampled on the same day.

8. The solid IDM should be sampled and appropriate Toxicity Characteristic Leaching Procedure analyses conducted prior to determining disposition. Laboratory turn-around time must be no greater than 30 days. Upon receipt of analytical results, a copy will be furnished to the client within 3 working days. The contractor will evaluate the data to determine disposal requirements within 10 days. Appropriate disposal must be performed no later than 50 days after the decision date if weather permits (Section 3.2).

- If the solid IDM are determined to be non-hazardous and uncontaminated, go to Section 3.3.

- If the solid IDM are determined to be non-hazardous but contaminated , go to Section 3.3.

- If the solid IDM are found to be hazardous wastes, go to Section 3.3.

9. If the solid IDM are not a hazardous waste **and** analytical data shows contaminant concentrations below the U.S. Environmental Protection Agency Region 3 (or applicable Region where work is being performed) Risk-Based Concentrations, contact the appropriate federal, state, or local agency for approval to discharge onto the ground near the site of generation.

    - Follow steps detailed in Section 3.3, Step 2 et seq. (above) pertaining to sediment and erosion control.

    - Upon completion of the solid IDM discharge to the ground, enter type of media, amount of media, date of disposal, and discharge point(s) in a bound Field Logbook. This information must be provided to the client.

    - Empty containers are to be properly decontaminated, stored and reused by appropriate personnel.

10. If the intrusive media is not a hazardous waste but analytical data shows concentrations above the screening criteria, dispose of the IDM according to state and local regulations.

    - Ensure that the waste containers are properly labeled as applicable in accordance with Section 3.3, Step 4.

    - Inform the client of the type and amount of waste, and the location of the waste.

    - When the waste is removed, enter the type of waste, amount of waste, date of pickup, and the destination of the waste in a bound Field Logbook. This information must be provided to the client.

3.4 PROCEDURES FOR DECONTAMINATION SOLUTION AND PERSONAL PROTECTIVE EQUIPMENT DISPOSAL

Decontamination solutions include catch water from steam-cleaning operations performed on large sampling equipment, drill rigs, and drums, as well as smaller quantities of soapy water and rinse solutions used in decontaminating field sampling equipment. At the completion of the field event, a composite sample of the decontamination solution will be taken. The decontamination solution will be treated as liquid IDM pending results (Section 3.2 et seq.).

Personal protective equipment will be containerized onsite, appropriately labeled, and disposed of in a designated trash receptacle.

4. MAINTENANCE

Not applicable.

5. REFERENCES

Environment Article Section 7-201(t).

U.S. Environmental Protection Agency. 1991. Management of Investigation-Derived Wastes during Site Inspections PB91-921331, OERR Directive 9345.3-02. Office of Emergency and Remedial Response U.S. Environmental Protection Agency, Washington, D.C. May.

Standard Operating Procedure No. 047
Direct-Push Technology Sampling

Prepared by

EA Engineering, Science, and Technology, Inc.
11019 McCormick Road
Hunt Valley, Maryland 21031

Revision: 0
August 2007

CONTENTS

Page

1. SCOPE AND APPLICATION 1

2. MATERIALS 1

3. GEOPROBE® AND HYDROPUNCH® 1

   3.1 Materials 1
   3.2 Groundwater – Hydraulic Pushing and Sampling 2
   3.3 Subsurface Soil – Hydraulic Pushing and Sampling 3
   3.4 Decontamination 4
   3.5 Abandonment 4

4. CONE PENETROMETER TESTING 5

   4.1 Materials 5
   4.2 Subsurface Characterization 5
   4.3 Decontamination 6
   4.4 Abandonment 6

5. SITE CHARACTERIZATION AND ANALYSIS PENETROMETER SYSTEM 7

   5.1 Materials 7
   5.2 Hydraulic Pushing and Sampling 7
   5.3 Decontamination 8
   5.4 Abandonment 9

6. MAINTENANCE 9

7. PRECAUTIONS 9

8. REFERENCES 9

1. SCOPE AND APPLICATION

This Standard Operating Procedure (SOP) establishes the protocol for using direct-push technology (DPT) in media sampling and performing subsurface characterization. This SOP includes the following DPT methods: Geoprobe®, Hydropunch®, Cone Penetrometer Testing (CPT), and Site Characterization and Analysis Penetrometer System (SCAPS).

2. MATERIALS

The following materials may be required:

Appropriately sized, all-terrain vehicle-skid-or track-mounted; DPT equipment; and supplies (i.e., hydraulic derrick and hammer assembly)	Personal protective equipment
Bentonite grout and clean sand for DPT hole abandonment	Phosphate-free, laboratory-grade detergent (e.g., Liquinox, Alconox, etc.)
DPT stainless steel rods	Source of approved water
Heavy plastic sheeting	Steam cleaner/sprayer and water obtained from approved source for decontaminating DPT equipment
Logbook	Steel drums for intrusion derived wastes (e.g., contaminated personal protective equipment, decon solutions, etc.)
Long-handled bristle brushes	Wash and rinse tubs
Mini-bailer or tubing and peristaltic pump (groundwater sampling only)	

3. GEOPROBE® AND HYDROPUNCH®

3.1 MATERIALS

Water sources for Geoprobe® and Hydropunch® activities, grouting, sealing, filter placement, well installation, and equipment decontamination must be approved by the Project Manager prior to arrival of the Geoprobe® and Hydropunch® equipment. Information required for the water source includes: water source, manufacturer/owner, address and telephone number, type of treatment and filtration prior to tap, time of access, cost per gallon (if applicable), dates and results associated with all available chemical analysis over the past 2 years, and the name and address of the analytical laboratory (if applicable).

Pure sodium bentonite with no additives will be the only additive allowed, and its use must be approved by the Project Manager prior to the arrival of the Geoprobe® and Hydropunch® equipment. The information required for evaluation includes: brand name, manufacturer, manufacturer's address and telephone number, product number, product description, and intended use for the product.

Portland Type II cement will be used for grout (refer to SOP No. 019).

3.2 GROUNDWATER – HYDRAULIC PUSHING AND SAMPLING

The objective of the selected DPT sampling technique is to allow grab samples to be taken at a selected site to facilitate aquifer characterization and analysis of potential contaminants. The analytical results from sampling can also be used to determine the placement of monitoring wells.

A site geologist will be present during all sampling and installation procedures, and will fully document all procedures and soil characteristics in the Field Logbook. Refer to SOP No. 003 (Field Logbook).

The site geologist will have on hand, at a minimum, a copy of the approved Health and Safety Plan, this SOP, the Field Investigation Work Plan, a hand lens (10X), a standard color chart, and a grain size chart.

Only solid vegetable shortening (e.g., Crisco®) without flavoring or additives may be used on downhole Geoprobe® and Hydropunch® equipment.

Surface runoff or other fluids will not be allowed to enter any DPT location or well during or after DPT activities.

The subcontractor will use the equipment specific guidelines for installation of the Geoprobe® DPT equipment. Probe rods will be forced into the ground by hydraulic means.

- Drive the sampler to the desired groundwater sampling interval. At the desired depth, insert extension rods down the inside diameter of the probe rods until the extension reaches the bottom of the screen. Remove the probe rods and sampler sheath while holding the screen in place.

- Collect the groundwater sample in the screen interval with a mini-bailer, peristaltic or vacuum pump, or other acceptable small diameter sampling device.

- The head of the rod may be equipped with a sensing device for characterization of soil properties or the contaminant content.

The subcontractor will use the equipment-specific guidelines for installation of the Hydropunch® equipment. Rods will be forced into the ground by hydraulic means.

- The Hydropunch® tool is a double cylinder, designed to be sealed until the desired sampling depth is reached. Upon reaching the desired sampling depth, the outer cylinder is pulled back, exposing a perforated, stainless steel sampling barrel covered with filter material.

- The water sample enters the barrel and the sample is retrieved by pulling the probe rods from the hole with the hydraulic derrick and hammer assembly. Groundwater is the only media that is sampled by Hydropunch® equipment.

- The head of the rod may be equipped with a sensing device for characterization of the soil properties or the contaminant content.

- The sample volume collected with this technique is approximately 500-1,000 ml. Larger sample volumes can be collected by inserting tubing attached to a peristaltic pump into the rods to obtain water samples.

If desired, a small diameter monitoring well may be installed at this point. Refer to SOP No. 019 (Monitoring Well Installation).

If a well will not be installed, the rods will be removed as the borehole is simultaneously filled with a bentonite/grout mixture. A polyvinyl chloride (PVC) tube fed into the rod casing will allow the addition of grout.

3.3 SUBSURFACE SOIL – HYDRAULIC PUSHING AND SAMPLING

The objective of the selected DPT sampling technique is to allow grab samples to be taken at a selected site for characterization of the stratigraphy and for analysis of potential contaminants. The analytical results from sampling can also be used to determine the placement of monitoring wells.

A site geologist will be present during all DPT sampling and soil characterization. All procedures and soil characteristics will be fully documented in the Field Logbook (refer to SOP No. 003 [Field Logbook]).

The site geologist will have on hand, at a minimum, a copy of the approved Health and Safety Plan, this SOP, the Field Investigation Plan, a hand lens (10X), a standard color chart, and a grain-size chart.

Only solid vegetable shortening (e.g., Crisco®) without flavoring or additives may be used on downhole Geoprobe® equipment.

Surface runoff or other fluids will not be allowed to enter any DPT location or well during or after DPT activities.

The subcontractor will use the equipment specific guidelines for installation of the Geoprobe® DPT equipment. Probe rods will be forced into the ground by hydraulic means. Additional rods will be added in 3- to 4-ft increments until the leading edge of the sampler reaches the top of the desired sampling interval.

Once the desired sampling depth has been reached, insert extension rods down the inside diameter of the probe rods until it reaches the top of the sampler assembly. Attach the extension rod handle to

the top extension rod. Turn the handle clockwise until the stop-pin detaches from the drive head. Remove the extension rods and the stop-pin. Attach a drive cap to the probe and drive the sampler approximately 2 ft using hydraulic derrick.

The DPT sampler can be retrieved by pulling the probe rods from the hole with the hydraulic derrick and hammer assembly.

The liner will be capped with Teflon® tape and vinyl end caps. The liners can be split open to remove samples for composition analysis or for transfer to other containers for shipment to the laboratory for analysis.

The head of the rod may be equipped with a sensing device for characterization of the soil properties or the contaminant content.

3.4 DECONTAMINATION

All Geoprobe® and Hydropunch® DPT equipment must be thoroughly cleaned before and after each use to allow retrieval of representative groundwater samples. Geoprobe® soil sample liners are disposed of after each use. Scrub all metal parts with a stiff, long bristle brush and a non-phosphate soap solution. Steam cleaning may be substituted where available. Rinse with distilled water and allow to air-dry before assembly.

After decontamination, a new clean liner will be installed and all parts will be inspected for wear or damage.

Refer to SOP No. 005 (Decontamination).

3.5 ABANDONMENT

Pure bentonite or a bentonite/grout mixture (20:1) will be used to fill the resulting borehole if the water table is penetrated. Boreholes that do not penetrate the water table will be backfilled with cuttings from the hole and topped with a bentonite seal. Clean sand will be used to fill any remaining volume in the borehole.

Abandonment of Geoprobe® and Hydropunch® generated DPT boreholes will meet the standards established under SOP No. 028 (Well and Boring Abandonment).

4. CONE PENETROMETER TESTING

4.1 MATERIALS

A CPT rig typically consists of an enclosed 20- to 40-ton truck equipped with vertical hydraulic rams that are used to force a sensor probe into the ground. The weight of the CPT rig is dependent upon the thrust required at the site. The majority of CPT rigs are mounted in heavy-duty trucks that are ballasted to a total dead weight of approximately 15 tons. Screw anchors are utilized to develop the extra reaction to reach the maximum thrust of 20 tons. The rig is separated into two separate workspaces: data acquisition and hydraulic push areas.

Water sources for CPT activities and decontamination must be approved by the Project Manager prior to arrival of the CPT equipment. Information required for the water source includes: water source, manufacturer/owner, address and telephone number, type of treatment and filtration prior to tap, time of access, cost per gallon (if applicable), dates and results associated with all available chemical analysis over the past 2 years, and the name and address of the analytical laboratory (if applicable).

Pure sodium bentonite with no additives will be the only additive allowed, and its use must be approved by the Project Manager prior to the arrival of the DPT equipment. The information required for evaluation includes: brand name, manufacturer, manufacturer's address and telephone number, product number, product description, and intended use for the product.

Portland Type II cement will be used for grout (refer to SOP No. 019).

4.2 SUBSURFACE CHARACTERIZATION

The objective of this technology is to collect stratigraphic information using CPT equipment to determine subsurface stratigraphy and geotechnical properties at a particular site. CPT activities will be in accordance with American Society for Testing and Materials D 3441-86 and American Society for Testing and Materials D 5778-95. The stratigraphic information gathered can be used to facilitate the selection of DPT sampling screen intervals. At the same time, it is possible to install a 0.25-in. diameter pre-packed PVC monitoring well.

CPT rods are used to hydraulically push the CPT probe into the subsurface. Probes cannot be pushed into hard rock, and significant gravel or cobble content in the formation may impede or preclude penetration of the probe. The depth of penetration achievable depends on the type of formation, type of sampling probe, and size of the hydraulic equipment used.

The CPT probe includes the following components:

- A conical tip to measure vertical resistance beneath the tip.
- A friction sleeve to measure frictional resistance on the side of the probe, as a function of depth.

- Two internal strain gauge-type load cells, which independently measure the vertical resistance and side friction.

- A cone pressure gauge to measure the water pressure as the probe is pushed into the ground.

- Inclinometer to determine potential drifting of the probe (optional).

- Seismic transducers to perform downhole seismic surveys (optional). Therefore, stratigraphic data collected with the CPT include: tip resistance, local friction, friction ratio, pore pressure, and resistivity.

Data will be transferred from the probe to the data acquisition system or logger through an electrical cable. The hole will be advanced continuously at a rate of 0.6-1.0 in. per second. The data will be logged at every 0.4-0.8 in. of penetration. Monitor the probe's stratigraphic position will be monitored as it advances downward. Perform pore water pressure dissipation tests in representative hydrostratigraphic intervals. Record dissipated pore water pressures to represent hydraulic head values.

Once the confining unit underlying the surficial aquifer or the required depth has been reached, the CPT is pulled from the ground. Target interval samples can be collected during CPT hole advancement using direct push sampling techniques, i.e., Geoprobe® or Hydropunch® (Section 3).

4.3 DECONTAMINATION

All CPT equipment must be thoroughly cleaned before arrival at the work site, between test holes, and prior to being moved out of a work area. Scrub all metal parts with a stiff, long bristle brush and a non-phosphate soap solution. Steam cleaning may be substituted where available. Rinse with distilled water and allow to air-dry before assembly.

Refer to SOP No. 005 (Decontamination).

4 .4 ABANDONMENT

If the push hole was developed for the stratigraphic test only, once the testing is completed, grout the hole from bottom to top. If the hole has not collapsed after removing the CPT, PVC piping will be used to grout the hole. If the hole has collapsed after removing the CPT, then hollow CPT rods and a sacrificial tip will be used to grout the hole. The PVC pipe or CPT rods will be pushed to the bottom of the hole. Grout will then be pumped to the bottom of the hole as the PVC pipe or CPT rods are withdrawn.

Refer to SOP No. 028 (Well and Boring Abandonment).

5. SITE CHARACTERIZATION AND ANALYSIS PENETROMETER SYSTEM

5.1 MATERIALS

SCAPS cone penetrometer and laser induced fluorescence (LIF) technology requires the use of a specialized 20-ton truck. The truck has two separate enclosed compartments. Each compartment is temperature controlled and monitored for air quality. The two rooms are the data acquisition and processing room, and the hydraulic ram/rod handling room. Approximately 20 ft of overhead clearance is required to fully extend the hydraulic ram and allow for leveling jack movement.

All materials required to complete SCAPS analysis are provided by the subcontractor to include cone penetrometer equipment. All hydraulic equipment, SCAPS rods, nitrogen lasers, etc. are included within the vehicle. A decontamination water source and a source of water for mixing the grout are required.

Water sources for equipment decontamination must be approved by the Project Manager prior to arrival of the SCAPS equipment. Information required for the water source includes: water source, manufacturer/owner, address and telephone number, type of treatment and filtration prior to tap, time of access, cost per gallon (if applicable), dates and results associated with all available chemical analysis over the past 2 years, and the name and address of the analytical laboratory (if applicable).

Pure sodium bentonite with no additives will be the only additive allowed, and its use must be approved by the Project Manager prior to the arrival of the SCAPS equipment. The information required for evaluation includes: brand name, manufacturer, manufacturer's address and telephone number, product number, product description, and intended use for the product.

Portland Type II cement will be used for grout (refer to SOP No. 019).

5.2 HYDRAULIC PUSHING AND SAMPLING

The objective of the SCAPS technique is to allow grab samples and stratigraphic information to be collected at a selected site to facilitate subsurface characterization and for analysis of potential contaminants. The analytical results obtained can also be used to determine the placement of monitoring wells. At the same time, it is possible to install a small diameter well for sampling purposes. Refer to SOP No. 019 (Monitoring Well Installation). If a well will not be installed, the borehole can be grouted as the equipment is removed.

A site geologist will be present during all installation and sampling procedures and will fully document all procedures and soil characteristics in the Field Logbook (refer to SOP No. 003 [Field Logbook]).

The site geologist will have on hand, at a minimum, a copy of the approved Health and Safety Plan, this SOP, the Field Investigation Work Plan, a hand lens (10X), a standard color chart, and a grain-size chart.

Only solid vegetable shortening (e.g., Crisco®) without flavoring or additives may be used on downhole SCAPS equipment.

Surface runoff or other fluids will not be allowed to enter any DPT location or well during or after direct-push activities.

The subcontractor will use the equipment specific guidelines for installation of the SCAPS DPT equipment. Prior to SCAPS field activities, calibration soil samples will be collected and analyzed in order to determine the LIF sensor fluorescence threshold and detection limits for the site.

SCAPS LIF technology uses a pulsed nitrogen laser coupled with an optical detector to make fluorescence measurements via optical fibers. The LIF sensor is mounted on a cone penetrometer probe so that soil classification data and fluorescence data are collected simultaneously. The laser consumes nitrogen gas, which is supplied from cylinders stored on the accompanying trailer.

The SCAPS CPT sensors are used to gather stratigraphic information. See Section 4 for CPT operating procedures.

Target interval samples can be collected during SCAPS hole advancement using direct push sampling techniques such as Geoprobe® or Hydropunch® (Section 3).

5.3 DECONTAMINATION

Decontamination of SCAPS equipment is automated after initialization by a field team member. A pressurized hot water system is used to decontaminate the push rods as they are retracted from the ground. The SCAPS vehicle is equipped with a decontamination collar mounted to the bottom that cleans the rods. The decontamination water is removed by vacuum and transferred to a storage drum prior to disposal or treatment. A trailer attached to the back of the vehicle contains the water pump, heater for decontamination, and decontamination water containment drum.

Worker exposure is reduced by minimizing contact with contaminated media.

Refer to SOP No. 005 (Decontamination).

5.4 ABANDONMENT

SCAPS automatically grouts the penetrometer cavity as the rods are removed. The grout is pumped at high pressure through a 0.25-in. diameter tube in the center of the penetrometer rods. The tip is sacrificed at the bottom of the cavity to allow release of the grout.

A trailer attached to the back of the vehicle contains the 300-gal grout mixing bin and pump.

If the automatic grout feed does not work, the cavity will be manually filled with grout.

Abandonment of SCAPS generated borehole will meet the standards established under SOP No. 028 (Well and Boring Abandonment).

6. MAINTENANCE

Not applicable.

7. PRECAUTIONS

Refer to the site-specific Health and Safety Plan for discussion of hazards and preventive measures during intrusive activities.

8. REFERENCES

American Society for Testing and Materials (ASTM). 1986. ASTM Designation D3441-86. American Society for Testing and Materials, Standard Test Method for Deep, Quasi-Static, Cone and Friction-Cone Penetration Test of Soil. December.

Battelle. 1994. Northern Boundary Area Ground Water Assessment Work Plan, Appendix B.

Department of Energy Environmental Management. 1998. Technology Description. World Wide Web Site: www.em.doe.gov/cgi-bin/parse/plumesfa/intech/conepen/tech.html. January.

Kejr Engineering, Inc. 1995. Geoprobe® Screen Point 15 Groundwater Sampler Standard Operating Procedure, Technical Bulletin No. 95-1500.

Kejr Engineering, Inc. 1996a. Geoprobe® Large Bore Soil Sampler Standard Operating Procedure, Technical Bulletin No. 93-660.

Kejr Engineering Inc. 1996b. Geoprobe® Macro-Core® Soil Sampler Standard Operating Procedures, Technical Bulletin No. 95-8500.

U.S. Environmental Protection Agency (U.S. EPA). 1993. Subsurface Characterization and Monitoring Techniques, Volume 1, Appendices A and B. May.

U.S. EPA. 1997. The Site Characterization and Analysis Penetrometer System Laser-Induced Fluorescence Sensor and Support System. Innovative Technology Verification Report. February.

Standard Operating Procedure No. 048
for
Low-Flow Sampling

Prepared by

EA Engineering, Science, and Technology, Inc.
11019 McCormick Road
Hunt Valley, Maryland 21031

Revision 0
August 2007

CONTENTS

Page

1. GROUNDWATER SAMPLING BY LOW-FLOW PURGE AND SAMPLING METHOD USING DEDICATED PUMPS 1

1.1 Scope of Application 1
1.2 Equipment/Materials 1
1.3 Preliminary Site Activities 2
1.4 Well Purging and Sampling Procedure 3
1.5 Sample Preservation 4
1.6 Field Quality Control 5
1.7 Decontamination 6

2. GROUNDWATER SAMPLING BY LOW-FLOW PURGE AND SAMPLING METHOD USING PERISTALTIC PUMPS 6

2.1 Scope of Application 6
2.2 Equipment/Materials 6
2.3 Preliminary Site Activities 7
2.4 Well Purging and Sampling Procedures 8
2.5 Sample Preservation 10
2.6 Field Quality Control 11
2.7 Decontamination 11

3. SURFACE WATER AND LEACHATE SEEP SAMPLING PROCEDURE 12

3.1 Scope of Application 12
3.2 Equipment/Materials 12
3.3 Preliminary Site Activities 12
3.4 Sampling Procedure 13
3.5 Sample Preservation 14
3.6 Field Quality Control 15
3.7 Decontamination 15

4. REFERENCES 16

1. GROUNDWATER SAMPLING BY LOW-FLOW PURGE AND SAMPLING METHOD USING DEDICATED PUMPS

1.1 SCOPE OF APPLICATION

The purpose of this Standard Operating Procedure (SOP) is to establish the protocol for collecting groundwater samples using dedicated pump systems. The procedure is designed to permit the collection of groundwater samples with minimum turbidity.

1.2 EQUIPMENT/MATERIALS

- Work Plan.
- Well construction data, location map, and field data from last sampling event.
- Field logbook and Field Record of Well Gauging, Purging, and Sampling forms (Figure SOP048-1).
- Electric water level measuring device, 0.01 ft accuracy for monitoring water level during pumping operations.
- Pumps: adjustable rate, submersible pumps constructed of stainless steel and Teflon®.
- Tubing: Teflon or Teflon-lined polyethylene must be used to collect samples for organic analysis. For samples collected for inorganics analysis, Teflon or Teflon-lined polyethylene tubing will be used.
- Flow measurement supplies (e.g., graduated cylinder and stop watch).
- Power source (generator, etc.).
- Water quality indicator parameter monitoring instruments—pH, turbidity, specific conductance, and temperature. Optional indicators—Eh and dissolved oxygen.
- Flow-through cell (preferred) or clean container for water quality probes.
- Decontamination supplies (for monitoring instrumentation).
- Sample bottles and sample preservation supplies (as required by the analytical methods).
- Sample tags or labels.
- Cooler with bagged ice for sample bottles.
- Drum for purge water containment.

1.3 PRELIMINARY SITE ACTIVITIES

The following site activities are required prior to performing well purging and groundwater sampling. Field logbooks and sampling forms should be filled out as the procedure is being performed, as noted:

- Enter the following information in the field logbook and sampling form, as appropriate: site name, project number, field personnel, well identification, weather conditions, date and time, equipment used, and quality assurance/quality control data for field instrumentation.

- Check well for damage or evidence of tampering, record pertinent observations in field logbook and sampling form.

- Lay out sheet of polyethylene for monitoring and sampling equipment.

- Unlock well and remove well cap (if applicable).

- Measure VOCs with an ionization detector (flame or photo) instrument at the rim of the well and in the breathing zone, and record the readings in the field logbook and the sampling form.

- Measure and record the height of protective casing above the concrete pad or ground surface, as appropriate. This reading is compared to that recorded during well installation as an indication of possible well damage or settling that may have occurred.

- Dedicated sampling pumps should be positioned with the pump intake mid-point in the screened interval. If non-dedicated equipment is used, care will be taken to position pump or sampling hose intake at the screen mid-point.

- Measure and record the depth to water (to 0.01 ft) in the well to be sampled before purging begins. If the well casing does not have a reference point (usually a v-cut or indelible mark in the well casing), make one. If a reference point is made, it will be noted in the field logbook. Care should be taken to minimize disturbance of any particulate attached to the sides or at the bottom of the well. The depth to well bottom will be measured following the completion of sampling because of the potential to stir up sediment at the bottom of the well.

- Prepare the pump by checking electrical connections, discharge tubing, and motor (Grundfos Redi-Flo2). Locate the generator (if applicable) downwind of the well; connect the power converter to the generator and to the pump.

1.4 WELL PURGING AND SAMPLING PROCEDURE

The following general procedure should be followed to obtain representative groundwater samples. Field logbooks and sampling forms should be filled out as the procedure is being performed, as noted:

- Enter the following information in the field logbook and sampling form, as appropriate, prior to purging: purge date and time, purge method, and total well depth.

- Connect the flow-through cell or clean container containing the instrumentation header to the pump discharge and begin purging the well at 0.2-0.5 L/min, unless a different purge rate has been previously established for that well. Fill the flow cell completely. Care should be taken not to cause entrapment of air in the system. Record the purge start time and purge rate.

- Establish that the water level has not dropped significantly such that the pump is dry (bubbles in discharge) or water is heard cascading down the inside of the well. Ideally, the pump rate should cause little or no water level drawdown in the well (>0.5 ft and the water level should stabilize). The water level should be monitored every 3-5 minutes (or as appropriate) during pumping. Record pumping rate adjustments and depths to water. Pumping rates should, if needed, be reduced to the minimum capabilities of the pump (e.g., 0.1-0.2 L/min) to avoid pumping the well dry and/or to ensure stabilization of indicator parameters. If water levels continue to drop with the pump on the lowest flow rate, the pump will be shut off and the well will be allowed to recharge to prevent the well from going dry. **The well will not be purged to dryness prior to sampling to prevent erroneous field parameters and groundwater samples.** Sampling will commence as soon as the well has recharged to a sufficient level to collected the appropriate volume of samples with the pump.

- During purging of the well, monitor the water quality indicator parameters (turbidity, temperature, specific conductance, pH, etc.) every 3-5 minutes (or as appropriate). Record purge rate, volume purged, depth to water, water quality indicator parameters values, and clock time at 3- to 5-minute intervals in field logbook and sampling record. Purging of the standing well water is considered complete when three consecutive readings of the water quality indicator parameters agree within approximately 10 percent. Turbidity readings consistently below 10 nephelometric turbidity units (NTU) are considered to represent stabilization of discharge water for this parameter. If the parameters have stabilized, but the turbidity is not in the range of the 10 NTU goal, the pump flow rate should be decreased and measurement of the parameters should continue every 3-5 minutes.

- Purge water at a well will be containerized if a well has exceeded the MEG or MCL in previous sampling events. Any purge water that is collected will be treated at the groundwater treatment plant.

- Prior to sampling, disconnect the discharge tubing from the flow-through cell. If the water discharged by the pump is silty, wait for the water to clear before sampling. Ensure that bubbles are not observed in the discharge tubing. Record pertinent observations in field logbook and sampling records.

- Begin filling sample containers by allowing the pump discharge to flow gently down the inside of the container with as little agitation or aeration as possible. Collect the samples in the order below, as applicable:

  — VOCs
  — Inorganics.

- VOC samples requiring pH adjustment will have their pH checked to assure that the proper pH has been obtained. This will require that a test sample be collected to determine the amount of preservative that needs to be added to the sample containers prior to sampling. Details on sample preservation are discussed in Section 1.5.

- Label each sample as collected. Those samples (VOCs, etc.) requiring cooling will be placed into an ice cooler for delivery to the laboratory. Inorganic samples, after preservation, do not need to be cooled.

- After collection of the samples, restore the dedicated pumping assembly to the well by hanging the tube, electric line, and support cable inside the well by the specially-designed PVC well cap assembly. Lock well.

- Complete remaining portions of Field Record of Well Gauging, Purging, and Sampling form (Figure SOP048-1) after each well is sampled, including sample date and time, total quantity of water removed, well sampling sequence, types of sample bottles used, sample identification numbers, preservatives used, parameters requested for analysis, and field observations of sampling event.

1.5 SAMPLE PRESERVATION

The following preservation procedures are examples of typical preservation protocols specific to the indicated analyses. Pre-preserved bottles will be used if possible. Minimum sample preservation requirements for each parameter group are summarized below:

- **VOCs—**Aqueous VOC samples must be collected as specified below. Each VOC sample is taken in duplicate:

  — Uncap the sample bottle, taking care not to touch the Teflon-faced septum. If the septum is contaminated in any way, it should be replaced.

  — Fill a sample bottle, preserve with HC1, and check the pH. Adjust the volume of HC1 to assure pH<2.

— Add the amount of HC1 determined in the above step, and fill the sample vial slowly from the tubing, minimizing air entrainment, until the vial slightly overflows.

— Place the Teflon-faced silicon rubber septum on the convex meniscus, Teflon side (shiny side) down and screw cap on.

— Invert the bottle, tap lightly, and check for air bubbles.

— If air bubbles are present, open the bottle, add sample to eliminate air bubbles, and reseal. Repeat this procedure until the bottle is filled and no air bubbles are detected.

— Place samples on ice until shipment.

- **Inorganics—**Fill the sample bottle, preserve the sample to pH<2 with nitric acid (HNO_3), seal container, and place sample on ice for shipment.

Disposable pipettes should be used to introduce chemicals into the samples if necessary. Chemicals used for preserving should be poured into a 150-ml beaker. They should not be drawn directly from the preservative bottles because the bottle may become contaminated. Measurements for pH and temperature should not be taken from the sample containers. When preserving samples to a required pH, pH paper should be used to check the resultant pH. The sample should be poured across the pH paper. Never place pH paper directly into sample.

NOTE: Shipping regulations limit the amount of preservative which can be added. For a 1-L sample, this is generally 1.5 ml of acid preservative.

1.6 FIELD QUALITY CONTROL

Quality control samples are required to verify that the sample collection and handling process has not affected the quality of the groundwater samples. All field quality control samples must be prepared exactly as regular investigation samples with regard to sample volume, containers, and preservation. The following quality control samples will be collected for each sample delivery group (SDG) (an SDG may not exceed 20 samples) at the frequency noted:

- Field Duplicate—Required at a frequency of 10 percent per SDG.

- Matrix Spike/Matrix Spike Duplicate—Required at a frequency of 5 percent.

- Equipment Rinsate Blank—Required once prior to installation of dedicated pump systems.

- Source Water Blank—Required at a frequency of once per source per sampling event when equipment (rinsate) blank is required.

- Trip Blank—Required for VOC samples at a frequency of one per sample shipment.

1.7 DECONTAMINATION

Non-dedicated sampling equipment and field monitoring equipment will be decontaminated prior to use and following sampling of each well. This equipment will be decontaminated by the procedure listed below. Alternative procedures must be approved by the Project Manager prior to sampling event. Decontamination fluids will be collected in a 5-gal bucket and treated at the groundwater treatment plant.

The following decontamination procedure will be used:

- Flush the equipment with potable water
- Flush with non-phosphate detergent solution
- Flush with tap water to remove all of the detergent solution
- Flush with distilled/deionized water
- Flush with isopropyl alcohol
- Flush with distilled/deionized water.

It is recommended that the detergent and isopropyl alcohol used in the above sequence be used sparingly.

2. GROUNDWATER SAMPLING BY LOW-FLOW PURGE AND SAMPLING METHOD USING PERISTALTIC PUMPS

2.1 SCOPE OF APPLICATION

The purpose of this SOP is to establish the protocol for collecting groundwater samples using peristaltic pump systems. The procedure is designed to permit the collection of groundwater samples with minimum turbidity, and is intended to be used in conjunction with the analyses for the most common types of groundwater contaminants (VOCs and inorganic compounds).

2.2 EQUIPMENT/MATERIALS

- Work Plan.
- Well construction data, location map, field data from last sampling event.
- Field logbook and Field Record of Well Gauging, Purging, and Sampling forms (Figure SOP048-1).
- Water level measuring device, 0.01 ft accuracy (electronic preferred) for monitoring water level drawdown during pumping operations.
- Peristaltic pump.

- In-well tubing: Teflon or Teflon-lined polyethylene must be used to collect samples for organic analysis. For samples collected for inorganics analysis, Teflon or Teflon-lined polyethylene, PVC, Tygon, or polyethylene tubing may be used.
- Pump head tubing: Silicon tubing must be used to in the pump head assembly.
- Flow measurement supplies (e.g., graduated cylinder and stop watch).
- Power source (battery, etc.).
- Water quality indicator parameter monitoring instruments – pH, turbidity, specific conductance, and temperature. Optional indicators – Eh and dissolved oxygen.
- Flow-through cell (preferred) or clean container for water quality probe.
- Decontamination supplies (for monitoring instrumentation).
- Sample bottles and sample preservation supplies (as required by the analytical methods).
- Sample tags or labels.
- Cooler with bagged ice for sample bottles.
- Drum for purge water containment.

2.3 PRELIMINARY SITE ACTIVITIES

The following site activities are required prior to performing well purging and groundwater sampling. Field logbooks and sampling forms should be filled out as the procedure is being performed, as noted:

- Enter the following information in the field logbook and sampling form, as appropriate: site name, project number, field personnel, well identification, weather conditions, date and time, equipment used, and quality assurance/quality control data for field instrumentation.
- Check well for damage or evidence of tampering, record pertinent observations in field logbook and sampling form.
- Unlock well and remove well cap (if applicable).
- Measure VOCs with an ionization detector (photo or flame) instrument at the rim of the well and in the breathing zone and record the readings in the field logbook and the sampling form.

- Measure and record the height of protective casing above the concrete pad, or ground surface, as appropriate. This reading is compared to that recorded during well installation as an indication of possible well damage or settling that may have occurred.

- Measure and record the depth to water (to 0.01 ft) in the well to be sampled before purging begins. If the well casing does not have a reference point (usually a v-cut or indelible mark in the well casing), make one. If a reference point is made, it will be noted in the field logbook. Care should be taken to minimize disturbance of any particulate attached to the sides or at the bottom of the well. The depth to well bottom will not be measured following the completion of sampling because of the potential to stir up sediment at the bottom of the well.

- Position the intake of the sampling hose at the mid-point of the screened interval.

- Prepare the pump by checking electrical connections and discharge tubing. Locate the battery downwind of the well; connect the peristaltic pump to the battery.

2.4 WELL PURGING AND SAMPLING PROCEDURES

The following general procedure should be followed to obtain representative groundwater samples. Field logbooks and sampling forms should be filled out as the procedure is being performed, as noted:

- Enter the following information in the field logbook and sampling form, as appropriate, prior to purging: purge date and time, purge method, and total well depth.

- Measure the water level with the pump in well before starting the pump. Begin purging the well at 0.3-0.5 L/min, unless a different purge rate has been previously established for that well.

- If well diameter permits, establish that the water level has not dropped significantly such that the pump is dry (air in discharge) or tubing suction is broken. Ideally, the pump rate should cause little or no water level drawdown in the well (>0.5 ft and the water level should stabilize). The water level should be monitored every 3-5 minutes (or as appropriate) during pumping. Care should be taken not to cause pump suction to be broken, or entrainment of air in the pump system. Record pumping rate adjustments and depths to water. Pumping rates should, if needed, be reduced to the minimum capabilities of the pump (e.g., 0.3 L/min) to avoid pumping the well dry and/or to ensure stabilization of indicator parameters. If water levels continue to drop with the pump on the lowest flow rate, the pump will be shut off and the well will be allowed to recharge to prevent the well from going dry. **The well will not be purged to dryness prior to sampling to prevent erroneous field parameters and groundwater samples.** Sampling will commence as soon as the well has recharged to a sufficient level to collected the appropriate volume of samples with the pump.

- During purging of the well, monitor the field indicator parameters (turbidity, temperature, specific conductance, pH, etc.) every 3-5 minutes (or as appropriate). Purging of the standing well water is considered complete when three consecutive readings of the water quality indicator parameters agree within approximately 10 percent. Turbidity readings consistently below 10 NTU are considered to represent stabilization of discharge water for this parameter. If the parameters have stabilized, but the turbidity is not in the range of the 10 NTU goal, the pump flow rate should be decreased and measurement of the parameters should continue every 3-5 minutes.

- Purge water at a well will be containerized if a well has exceeded the MEG or MCL in previous sampling events. Any purge water that is collected will be treated at the groundwater treatment plant.

- Prior to sampling, disconnect the sample discharge tubing from the flow-through cell. If the water discharged by the pump is silty, wait for the water to clear before sampling. Ensure that bubbles are not observed in the discharge tubing.

- Collect groundwater samples directly from the silicon tubing into preserved (when appropriate) sample containers. Begin filling sample containers from the pump discharge, allowing the water to fill the containers by allowing the pump discharge to flow gently down the inside of the container with as little agitation or aeration as possible. Collect the samples in the order below, as applicable:

  — VOCs
  — Inorganics.

- VOC samples requiring pH adjustment will have their pH checked to assure that the proper pH has been obtained. This will require that a test sample be collected to determine the amount of preservative that needs to be added to the sample containers prior to sampling. Detail on sample preservation are discussed in Section 2.5.

- Label each sample as collected. Those samples (VOCs, etc.) requiring cooling will be placed into an ice cooler for delivery to the laboratory. Inorganic samples, after preservation, do not need to be cooled.

- After collection of the samples, restore the dedicated tubing assembly to the well by hanging the tube inside the well by the specially-designed PVC well cap assembly. Lock well.

- Complete remaining portions of Field Record of Well Gauging, Purging, and Sampling form (Figure SOP048-1) after each well is sampled, including: sample date and time, total quantity of water removed, well sampling sequence, types of sample bottles used, sample identification numbers, preservatives used, parameters requested for analysis, and field observations of sampling event.

- The silicon tubing used in the peristaltic pump will be changed after use at each well.

2.5 SAMPLE PRESERVATION

The following preservation procedures are examples of typical preservation protocols specific to the indicated analyses. Pre-preserved bottles will be used if possible. Minimum sample preservation requirements for each parameter group are summarized below:

- **VOCs—**Aqueous VOC samples must be collected as specified below. Each VOC sample is taken in duplicate:

  — Uncap the sample bottle, taking care not to touch the Teflon-faced septum. If the septum is contaminated in any way, it should be replaced.

  — Fill a sample bottle, preserve with HCL, and check the pH. Adjust the volume of HCL to assure pH<2.

  — Add the amount of HCL determined in the above step, and fill the sample vial slowly from the tubing, minimizing air entrainment, until the vial slightly overflows.

  — Place the Teflon-faced silicon rubber septum on the convex meniscus, Teflon side (shiny side) down, and screw cap on.

  — Invert the bottle, tap lightly, and check for air bubbles.

  — If air bubbles are present, open the bottle, add sample to eliminate air bubbles, and reseal. Repeat this procedure until the bottle is filled and no air bubbles are detected.

  — Place samples on ice until shipment.

- **Inorganics—**Fill the sample bottle, preserve the sample to pH<2 with nitric acid (HNO_3), seal container, and place sample on ice for shipment.

Disposable pipettes should be used to introduce chemicals into the samples if necessary. Chemicals used for preserving should be poured into a 150-ml beaker. They should not be drawn directly from the preservative bottles because the bottle may become contaminated. Measurements for pH and temperature should not be taken from the sample containers. When preserving samples to a required pH, pH paper should be used to check the resultant pH. The sample should be poured across the pH paper. Never place pH paper directly into sample.

NOTE: Shipping regulations limit the amount of preservative which can be added. For a 1-L sample, this is generally 1.5 ml of acid preservative.

2.6 FIELD QUALITY CONTROL

Quality control samples are required to verify that the sample collection and handling process has not affected the quality of the groundwater samples. All field quality control samples must be prepared exactly as regular investigation samples with regard to sample volume, containers, and preservation. The following quality control samples will be collected for each SDG (an SDG may not exceed 20 samples) at the frequency noted:

- Field Duplicate—Required at a frequency of 10 percent per SDG
- Matrix Spike/Matrix Spike Duplicate—Required at a frequency of 5 percent
- Equipment (Rinsate) Blank—Required once prior to installation of dedicated sample tubing
- Source Water Blank—Required at a frequency of one per source per sampling event
- Trip Blank—Required for VOC samples at a frequency of one per sample shipment.
- Temperature Blank—Required at a frequency of once per sample shipment container.

2.7 DECONTAMINATION

Non-dedicated sampling and field monitoring equipment will be decontaminated prior to use and following sampling of each well. This equipment will be decontaminated by the procedure listed below. Alternate procedures must be approved by the Project Manager prior to the sampling event. Decontamination fluids will be collected in a 5-gal bucket and treated at the groundwater treatment plant.

The following decontamination procedure will be used:

- Flush the equipment with potable water
- Flush with non-phosphate detergent solution
- Flush with tap water to remove all of the detergent solution
- Flush with distilled/deionized water
- Flush with isopropyl alcohol
- Flush with distilled/deionized water.

It is recommended that the detergent and isopropyl alcohol used in the above sequence be used sparingly.

3. SURFACE WATER AND LEACHATE SEEP SAMPLING PROCEDURE

3.1 SCOPE OF APPLICATION

The purpose of this SOP is to establish the protocol for collecting surface water and leachate seep samples. The procedure is designed to permit the collection of representative surface water and leachate seep samples, and has been adapted from the procedure outlined in the Work Plan. This SOP is suitable for collecting surface water and seep samples requiring analyses for the most common types of surface water contaminants (VOCs and inorganic compounds).

3.2 EQUIPMENT/MATERIALS

- Work Plan.
- Location map, field data from last sampling event.
- Field logbook and Field Record of Surface Water and Sediment Sampling forms (Figure SOP048-2).
- Water quality indicator parameter monitoring instruments – pH, turbidity, specific conductance, and temperature. Optional indicators – Eh and dissolved oxygen.
- Decontamination supplies (for monitoring instrumentation).
- Dedicated, pre-cleaned 1-L wide-mouth or volatile organic analyte sample container (for sample collection).
- Sample bottles and sample preservation supplies (as required by the analytical methods).
- Sample tags or labels.
- Cooler with bagged ice for sample bottles.

3.3 PRELIMINARY SITE ACTIVITIES

The following site activities are required prior to performing surface water or leachate seep sampling. Field logbooks and sampling forms should be filled out as the procedure is being performed, as noted:

- Enter the following information in the field logbook and sampling form, as appropriate: site name, project number, field personnel, sample station identification, weather conditions, date and time, equipment used, and quality assurance/quality control data for field instrumentation.

- Visually inspect sample station for evidence of changes in physical condition; record pertinent observations in field logbook and sampling form.

- Measure VOCs with a flame ionization detector instrument in the breathing zone and record the reading in the field logbook and sampling form.

3.4 SAMPLING PROCEDURE

The technique for surface water and leachate seep sampling must be selected after addressing such items as:

- Depth of waterbody
- Depth of sample
- Stratification
- Seasonal variations
- Analytical parameters of interest.

The following general procedure should be used to obtain representative surface water and leachate seep samples. Field logbooks and sampling forms should be filled out as the procedure is being performed, as noted:

- Enter the following information in the field logbook and sampling form, as appropriate, prior to sampling: date and time, sample method, and sample depth.

- Collect the sample from the surface water, within several tenths of a foot of the streambed, by immersing a new, dedicated 1-L glass or volatile organic analyte sample container into the waterbody. If a stream is being sampled, collect the sample upstream of the sampler with the opening of the sampling device oriented upstream but avoiding floating debris.

- Directly fill the appropriate sample containers from the 1-L or volatile organic analyte sampling device.

- Collect the samples in the order below, as applicable:

  — VOCs
  — Inorganics.

- Water sample containers are generally filled directly from the source or sampler without special considerations. The exception is the collection of aqueous VOC samples requiring pH adjustment. VOC samples will have their pH checked to assure that the proper pH has been obtained. This will require that a test sample be collected to determine the amount of preservative that needs to be added to the sample containers prior to sampling. Details on sample preservation methods are discussed in Section 3.6.

- Label each sample as collected. Those samples (VOCs, etc.) requiring cooling will be placed into an ice cooler for delivery to the laboratory. Inorganic samples, after preservation, do not need to be cooled.

- Measure water quality indicator parameters, if possible, by direct immersion of instrument probes into the waterbody immediately following sample collection. If direct measurement is not possible, measure these parameters from water remaining in the sampling device or another sample bottle. Record this information in the field logbook and sample data record.

- Complete remaining portions of the Field Record of Surface Water and Sediment Sampling form (Figure SOP048-2) after each station is sampled, including: time of sample collection, types of sample bottles used, sample identification numbers, preservatives used, parameters requested for analysis, and field observations of sampling event.

3.5 SAMPLE PRESERVATION

The following preservation procedures are examples of typical preservation protocols specific to the indicated analyses. Minimum sample preservation requirements for each parameter group are summarized below:

- **VOCs—**Aqueous VOC samples must be collected as specified below. Each sample is taken in duplicate:

  — Uncap the sample bottle, taking care not to touch the Teflon-faced septum. If the septum is contaminated in any way, it should be replaced.

  — Fill a sample bottle, preserve with HC1, and check the pH. Adjust the volume of HC1 to assure pH<2.

  — Add the amount of HC1 determined in the above step, and fill the sample vial slowly from the 1-L container, minimizing air entrainment, until the vial slightly overflows.

  — Place the Teflon-faced silicon rubber septum on the convex meniscus, Teflon side (shiny side) down and screw cap on.

  — Invert the bottle, tap lightly, and check for air bubbles.

  — If air bubbles are present, open the bottle, add sample to eliminate air bubbles, and reseal. Repeat this procedure until the bottle is filled and no air bubbles are detected.

  — Place samples on ice until shipment.

- **Inorganics—**Fill the sample bottle, preserve the sample to pH<2 with nitric acid (HNO_3), seal container, and place sample on ice for shipment.

Disposable pipettes should be used to introduce chemicals into the samples. Chemicals used for preserving should be poured into a 150-ml beaker. They should not be drawn directly from the preservative bottles because the bottle may become contaminated. Measurements for pH and temperature should not be taken from the sample containers. When preserving samples to a required pH, pH paper should be used to check the resultant pH. The sample should be poured across the pH paper. Never place pH paper directly into sample.

NOTE: Shipping regulations limit the amount of preservative which can be added. For a 1-L sample, this is generally 1.5 ml of acid preservative.

3.6 FIELD QUALITY CONTROL

Quality control samples are required to verify that the sample collection and handling process has not affected the quality of the surface water and leachate seep samples. All field quality control samples must be prepared exactly as regular investigation samples with regard to sample volume, containers, and preservation. The following quality control samples will be collected for each SDG (an SDG may not exceed 20 samples) at the frequency noted:

- Field Duplicate—Required at a frequency of 10 percent per SDG.
- Matrix Spike/Matrix Spike Duplicate—Required at a frequency of 5 percent.
- Equipment (Rinsate) Blank—Required at a frequency of once per day per media sampled.
- Source Water Blank—Required at a frequency of once per source per sampling event when equipment (rinsate) blank is required.
- Trip Blank—Required for VOC samples at a frequency of one per sample shipment.

3.7 DECONTAMINATION

Field monitoring equipment will be decontaminated prior to use and following sampling of each station by the procedure listed below. Laboratory pre-cleaned, dedicated 1-L glass sample collection containers are used once and discarded and, therefore, do not undergo any decontamination. Decontamination fluids will be collected in a 5-gal bucket and treated at the groundwater treatment plant.

The following decontamination procedure will be used:

- Flush the equipment with potable water
- Flush with non-phosphate detergent solution
- Flush with tap water to remove all of the detergent solution
- Flush with distilled/deionized water
- Flush with isopropyl alcohol
- Flush with distilled/deionized water.

It is recommended that the detergent and isopropyl alcohol used in the above sequence be used sparingly.

4. REFERENCES

U.S. Environmental Protection Agency. 1996. Groundwater Issue-Low Flow Sampling (Minimal Drawdown) Groundwater Sampling Procedures. April.

FIELD RECORD OF WELL GAUGING, PURGING, AND SAMPLING

Site Name:		Project Number:	
Well ID:		Well Lock Status:	
Well Condition:		Weather:	

Gauge Date:		Gauge Time:	
Sounding Method:		Measurement Ref:	
Stick Up/Down (ft):		Well Diameter (in.):	

Purge Date:		Purge Time:	
Purge Method:		Field Personnel:	
Ambient Air VOCs (ppm):		Well Mouth VOCs (ppm):	

WELL VOLUME

A. Well Depth (ft):		D. Well Volume/ft (L):	
B. Depth to Water (ft):		E. Well Volume (L) (C*D):	
C. Liquid Depth (ft) (A-B)		F. Three Well Volumes (L) (E*3)	

G. Measurable LNAPL? Yes _____ /ft No _____

Parameter	Beginning	1	2	3	4	5
Time (min.)						
Depth to Water (ft)						
Purge Rate (L/min)						
Volume Purged (L)						
pH						
Temperature (°C)						
Conductivity (µmhos/cm)						
Dissolved Oxygen (mg/L)						
Turbidity (NTU)						
eH (mV)						

Total Quantity of Water Removed (L):			
Samplers:		Sampling Time (Start/End):	
Sampling Date:		Decontamination Fluids Used:	
Sample Type:		Sample Preservatives:	
Sample Bottle IDs:			
Sample Parameters:			

Figure SOP048-1.

FIELD RECORD OF WELL GAUGING, PURGING, AND SAMPLING

Site Name:	Project Number:	Date:
Well ID:	Field Personnel:	

Parameter	6	7	8	9	10	11
Time (min.)						
Depth to Water (ft)						
Purge Rate (L/min)						
Volume Purged (L)						
pH						
Temperature (°C)						
Conductivity (µmhos/cm)						
Dissolved Oxygen (mg/L)						
Turbidity (NTU)						
eH (mV)						

Parameter	12	13	14	15	16	17
Time (min.)						
Depth to Water (ft)						
Purge Rate (L/min)						
Volume Purged (L)						
pH						
Temperature (°C)						
Conductivity (µmhos/cm)						
Dissolved Oxygen (mg/L)						
Turbidity (NTU)						
eH (mV)						

Comments and Observations:

Figure SOP048-1.

FIELD RECORD OF SURFACE WATER AND SEDIMENT SAMPLING

Site Name:			Project Number:
Sample Location ID:			Date:
Time:	Start:	End:	Sample Team Members:

SURFACE WATER INFORMATION

Type of Surface Water:
( ) Stream ( ) River
( ) Pond/Lake ( ) Seep

Water Depth and Sample Location _____ (ft)

Depth of Sample from Top of Water _____ (ft)

Equipment Used for Collection:
( ) None, Grab into Bottle
( ) Bomb Sampler
( ) Pump _____

Decontamination Fluids Used:
( ) Isopropyl Alcohol
( ) ASTM Type II Water
( ) Deionized Water
( ) Liquinox Solution
( ) Hexane
( ) HNO_3 Solution
( ) Potable Water
( ) None

Water Quality Parameters
( ) Temperature ____
( ) Conductivity ___ µmhs/cm
( ) pH ____ units
( ) Dissolved oxygen ____ mg/L
( ) Turbidity ____ NTU
( ) Eh ____ mv

Velocity Measurements Obtained? ( ) No ( ) Yes, See Flow Measurement Data Record
_____

Field QC Data: ( ) Field Duplicate Collected Sample Location Sketch: Method Used:

Duplicate ID _____
( ) MS/MSD

( ) Yes
( ) No

( ) Winkler
( ) Probe

SEDIMENT INFORMATION

Type of Sample Collected:
( ) Discrete
( ) Composite

Sediment Type:
( ) Clay
( ) Sand
( ) Organic
( ) Gravel

Equipment Used for Collection:
( ) Gravity Corer
( ) Stainless Steel Split Spoon
( ) Dredge
( ) Hand Spoon/Trowel
( ) Aluminum Pans
( ) Stainless Steel Bucket
( ) _____

Decontamination Fluids Used:
( ) Isopropyl Alcohol
( ) ASTM Type II Water
( ) Deionized Water
( ) Liquinox Solution
( ) Hexane
( ) HNO_3 Solution
( ) Potable Water
( ) None

Sample Observations:
( ) Odor _____
( ) Color

Field QC Data: ( ) Field Duplicate Collected ( ) MS/MSD
Duplicate ID _____

SAMPLES COLLECTED

Check if Required at this Location	Matrix		Check if Preserved with Acid/Base	Volume Required	Check if Sample Collected	Sample Bottle IDs			
	Surface Water	Sediment							

NOTES/SKETCH

Figure SOP048-2.

Standard Operating Procedure No. 051
for
Low Flow Purge and
Sampling with Dedicated Pumps

Prepared by

EA Engineering, Science, and Technology, Inc.
11019 McCormick Road
Hunt Valley, Maryland 21031

Revision: 0
August 2007

CONTENTS

Page

1. SCOPE AND APPLICATION 1

2. EQUIPMENT/MATERIALS 1

3. PRELIMINARY SITE ACTIVITIES 2

4. SAMPLING PROCEDURE 3

5. SAMPLING PRESERVATION 4

6. FIELD QUALITY CONTROL 5

7. DECONTAMINATION 5

1. SCOPE OF APPLICATION

The purpose of this Standard Operating Procedure is to establish the protocol for collecting groundwater samples using dedicated pump systems. The procedure is designed to permit the collection of groundwater samples with minimum turbidity, and is intended to be used in conjunction with the analyses for the most common types of groundwater contaminants (volatile organic compounds and semivolatile organic compounds, pesticides, polychlorinated biphenyls, metals, and inorganic compounds). This Standard Operating Procedure was prepared based on draft guidance prepared by U.S. Environmental Protection Agency Region 1 and conforms with the procedures described in the Long-Term Monitoring Plan.

2. EQUIPMENT/MATERIALS

- Long-Term Monitoring Plan.
- Well construction data, location map, and field data from last sampling event.
- Field logbook, Field Record of Well Gauging Form (Figure SOP051-1), and Field Record of Well Gauging, Purging, and Sampling Form (Figure SOP051-2).
- Electronic water level measuring device, 0.01 ft accuracy for monitoring water level during pumping operations.
- Pumps: adjustable rate, submersible pumps constructed of stainless steel and Teflon.
- Tubing: Teflon or Teflon-lined polyethylene must be used to collect samples for organic and inorganic analyses.
- Flow measurement supplies (e.g., graduated cylinder and stop watch).
- Power source (generator, etc.).
- Water quality indicator parameter monitoring instruments—pH, turbidity, specific conductances, and temperature. Optional indicators—Eh and dissolved oxygen. Water quality indicator parameters will be measured in the field in accordance with EPA-600/4-79-020 (1983) using the following methods: temperature (Method 170.1), pH (Method 150.1), turbidity (Method 180.1), specific conductance (Method 120.1), and dissolved oxygen (Method 360.1).

- Flow-through cell for water quality parameters.
- Decontamination supplies (for monitoring instrumentation).
- Sample bottles and sample preservation supplies (as required by the analytical methods).
- Sample tags or labels.
- Cooler with bagged ice for sample bottles.

3. PRELIMINARY SITE ACTIVITIES

The following site activities are required prior to performing well purging and groundwater sampling. Field logbooks and sampling forms should be filled out as the procedure is being performed, as noted:

- Enter the following information in the field logbook and sampling form, as appropriate: site name, project number, field personnel, well identification, weather conditions, date and time, equipment used, and quality assurance/quality control data for field instrumentation.
- Check well for damage or evidence of tampering, record pertinent observations in field logbook and sampling form.
- Lay out sheet of polyethylene for monitoring and sampling equipment.
- Unlock well and remove well cap (if applicable).
- Measure volatile organic compounds with a photoionization detector instrument at the rim of the well and in the breathing zone, and record the readings in the field logbook and the sampling form.
- Measure and record the height of protective casing above the concrete pad or ground surface, as appropriate. This reading is compared to that recorded during well installation as an indication of possible well damage or settling that may have occurred.
- Measure and record the depth to water (to 0.01 ft) in the well to be sampled before purging begins. If the well casing does not have a reference point (usually a v-cut or indelible mark in the well casing), make one. Care should be taken to minimize disturbance of any particulate attached to the sides or at the bottom of the well. The depth to well bottom will be measured following completion of the sampling because of the potential to stir up sediment at the bottom of the well.

- Prepare the pump by checking electrical connections, discharge tubing, and motor (Grundfos Redi-Flo2). Locate the generator (if applicable) downwind of the well; connect the power converter to the generator and the pump.

4. SAMPLING PROCEDURE

The following general procedure should be followed to obtain representative groundwater samples. Field logbooks and sampling forms should be filled out as the procedure is being performed, as noted:

- Enter the following information in the field logbook and sampling form, as appropriate, prior to purging: purge date and time, purge method, and total well depth.

- Connect the flow-through cell containing the instrumentation header to the pump discharge and begin purging the well at 0.2-0.5 L/min, unless a different purge rate has been previously established for that well. Fill the flow-through cell completely. Care should be taken not to cause entrapment of air in the system. Record the purge start time and purge rate.

- Establish that the water level has not dropped significantly such that the pump is dry (bubbles in discharge) or water is heard cascading down the inside of the well. Ideally, the pump rate should cause little or no water level drawdown in the well (<0.5 ft and the water level should stabilize). The water level should be monitored every 3-5 minutes (or as appropriate) during pumping. Record pumping rate adjustments and depths to water. Pumping rates should, if needed, be reduced to the minimum capabilities of the pump (e.g., 0.1-0.2 L/min) to avoid pumping the well dry and/or to ensure stabilization of indicator parameters. If the water level continues to drop with the pump on the lowest flow rate, the pump will be shut off and the well allowed to recharge to prevent it from going dry. **The well will not be purged to dryness prior to sampling to prevent erroneous field parameters and groundwater samples.** Sampling will commence as soon as the well has recharged to a sufficient level to collect the appropriate volume of samples with the pump.

- During purging of the well, monitor the water quality indicator parameters (turbidity, temperature, specific conductance, pH, etc.) every 3-5 minutes (or as appropriate). Record purge rate, volume purged, depth to water, water quality indicator parameters values, and clock time at 3- to 5-minute intervals in field logbook and sampling record. Purging of the standing well water is considered complete when three consecutive readings of the water quality indicator parameters agree within approximately 10 percent. Turbidity readings consistently below 10 nephelometric turbidity units (NTUs) are considered to represent stabilization of discharge water for this

parameter. If the parameters have stabilized, but the turbidity is not in the range of the 10 NTU goal, the pump flow rate should be decreased and measurement of the parameters should continue every 3-5 minutes.

- Prior to sampling, disconnect the discharge tubing from the flow-through cell. If the water discharged by the pump is silty, wait for the water to clear before sampling. Ensure that bubbles are not observed in the discharge tubing. Record pertinent observations in field logbook and sampling records.

- The purging rate will be controlled so that the well is not purged dry before sampling. If necessary, purging will be temporarily halted to permit recharge rather than allowing the well to be purged dry.

- Begin filling sample containers from the pump discharge, allowing the water to fill the containers by allowing the pump discharge to flow gently down the inside of the container with as little agitation or aeration as possible.

- Label each sample as collected. Those samples requiring cooling will be placed into an ice cooler for delivery to the laboratory.

- After collection of the samples, restore the dedicated pumping assembly to the well by hanging the tube, electric line, and support cable inside the well by the specially-designed PVC well cap assembly. Lock well.

- Complete remaining portions of Field Record of Well Gauging, Purging, and Sampling form (Figure SOP051-2) after each well is sampled, including sample date and time, total quantity of water removed, well sampling sequence, types of sample bottles used, sample identification numbers, preservatives used, parameters requested for analysis, and field observations of sampling event.

5. SAMPLE PRESERVATION

The following preservation procedures are examples of typical preservation protocols specific to the indicated analyses. Minimum sample preservation requirements for each parameter group are summarized below and in Table 3-1 of the Quality Assurance Project Plan:

- **Pesticides and Herbicides**—Fill the sample bottle, seal with a Teflon-lined cap, and place on ice for shipment.

6. FIELD QUALITY CONTROL

Quality control samples are required to verify that the sample collection and handling process has not affected the quality of the groundwater samples. All field quality control samples must be prepared exactly as regular investigation samples with regard to sample volume, containers, and preservation. The following quality control samples will be collected for each sample delivery group (a sample delivery group may not exceed 20 samples) at the frequency noted:

- **Field Duplicate**—Required at a frequency of 10 percent per sample delivery group
- **Matrix Spike/Matrix Spike Duplicate**—Required at a frequency of 5 percent
- **Equipment Rinsate Blank**—Required once prior to installation of dedicated pump systems
- **Source Water Blank**—Required at a frequency of once per sampling event when equipment rinsate blank is required.
- **Trip Blank**—Required for volatile organic compound samples at a frequency of one per sample shipment.

NOTE: The dedicated pumps remain in the wells between sampling events.

7. DECONTAMINATION

Non-dedicated sampling equipment and field monitoring equipment will be decontaminated prior to use and following sampling of each well. This equipment will be decontaminated by the procedure listed below. Alternative procedures must be approved by the Project Manager prior to sampling event. Decontamination fluids will be collected in a 5-gal bucket and treated at the groundwater treatment plant.

The following decontamination procedure will be used:

- Flush the equipment with potable water
- Flush with non-phosphate detergent solution
- Flush with tap water to remove all of the detergent solution
- Flush with distilled/deionized water
- Flush with isopropyl alcohol
- Flush with distilled/deionized water.

It is recommended that the detergent and isopropyl alcohol used in the above sequence be used sparingly.

FIELD RECORD OF WELL GAUGING

Project Name:	Project No:	Date:
Weather/Temperature:		
EA Personnel:	Equipment:	

Well Number	Well Elevation	Depth to Water	Depth to LNAPL	LNAPL Thickness	Corrected Water Table Elevation[a]

(a) Based on an assumed specific gravity of 0.80 for LNAPL.

NOTE: All measurements in feet.
LNAPL = Light, non-aqueous phase liquid.

FIELD RECORD OF WELL GAUGING, PURGING, AND SAMPLING

Site Name:		Project Number:	
Well ID:		Well Lock Status:	
Well Condition:		Weather:	

Gauge Date:		Gauge Time:	
Sounding Method:		Measurement Ref:	
Stick Up/Down (ft):		Well Diameter (in.):	

Purge Date:		Purge Time:	
Purge Method:		Field Personnel:	
Ambient Air VOCs (ppm):		Well Mouth VOCs (ppm):	

WELL VOLUME

A. Well Depth (ft):		D. Well Volume/ft (L):	
B. Depth to Water (ft):		E. Well Volume (L) (C*D):	
C. Liquid Depth (ft) (A-B)		F. Three Well Volumes (L) (E*3):	

G. Measurable LNAPL? Yes _____ /ft No _____

Parameter	Beginning	1	2	3	4	5
Time (min.)						
Depth to Water (ft)						
Purge Rate (L/min)						
Volume Purged (L)						
pH						
Temperature (°C)						
Conductivity (µmhos/cm)						
Dissolved Oxygen (mg/L)						
Turbidity (NTU)						
eH (mV)						

Total Quantity of Water Removed (L):			
Samplers:		Sampling Time (Start/End):	
Sampling Date:		Decontamination Fluids Used:	
Sample Type:		Sample Preservatives:	
Sample Bottle IDs:			
Sample Parameters:			

Standard Operating Procedure No. 054
for
Collecting Fish Tissue for Chemical Analysis

Prepared by

EA Engineering, Science, and Technology, Inc.
15 Loveton Circle
Sparks, Maryland 21152

Revision 0
August 2009

CONTENTS

Page

1. SCOPE AND APPLICATION 1

2. MATERIALS 1

3. COLLECTION PROCEDURE 2

4. COLLECTION PERMIT 3

5. DOCUMENTING SAMPLE LOCATION 3

6. FIELD HANDLING AND DATA COLLECTION 4

7. SAMPLE HANDLING 5

8. COMPOSITING TECHNIQUES AND RECOMMENDATIONS 6

9. SAMPLE CONTAINERS AND PRESERVATION TECHNIQUES 6

10. REFERENCES 7

1. SCOPE AND APPLICATION

The purpose of this Standard Operating Procedure is to delineate protocols for the collection of fish samples for tissue analysis.

2. MATERIALS

The primary instrument for collecting fish in freshwater environments is electrofishing, either by boat or by wading in a stream/shallow river. A Coffelt VVP-15 electrofishing unit will be employed at deep water locations using an 18-ft boat platform. In shallow depths where a smaller electrofishing unit is necessary, a Smith-Root 1.5 KVA unit mounted in a 14-ft Jon boat will be used. For streams and small rivers where wading is possible, a Coffelt portable backpack electrofishing unit will be utilized. The electrofishing units will be used in the pulsed DC mode. Other equipment used in fish collection studies may include:

- Hand nets (dip nets)
- Global Positioning System unit (for marking collection areas or navigating to previously sampled locations)
- Glass or polytetrafluoroethylene (PTFE) cutting board
- Stainless-steel filet knife
- Aluminum foil
- Large zip-lock bags
- Indelible markers
- Sample labels
- Project Scope of Work, Site Safety and Health Plan, and this *Standard Operating Procedure for Fish Tissue Analysis*
- *EPA Guidance for Assessing Chemical Contamination Data for Use in Fish Advisories Volume 1 Fish Sampling and Analysis – Third Edition (November)* (EPA 823-B-00-007) (U.S. Environmental Protection Agency [EPA] 2000)
- Copy of Scientific Collection Permit
- Location map

- Field notebook and datasheets
- Chain-of-custody (COC) form(s)
- Coolers and ice
- Live well and aerator
- Appropriate weight measurement device
- Appropriate length measuring device
- Scissors and pliers to cut fish spines
- Deionized water
- Nitric acid solution.

Supplemental gear may be employed, if necessary, to catch target fish species. These may include seine net, gill net, Fyke net, jug line, or rod and reel.

In marine environments (salt water with high conductivity), electrofishing is not used since the conductivity carries the electric current around the fish. In marine fish tissue surveys, other gear is employed. This may include gill nets, seine nets, jug lines, or rod and reels.

3. COLLECTION PROCEDURE

The purpose of this section is to provide a broad description of selected methods of collection so that there are several routes by which to obtain field samples.

The primary method for fish collections will be boat electrofishing. This method is effective at collecting all trophic levels of fish to be analyzed at each of the selected locations, while reducing negative impacts to non-targeted fauna. The boat operator will move the boat slowly through likely fish habitat, including areas providing cover (e.g., snags, submerged aquatic vegetation, and other forms of structure). The primary collector stands on the bow of the boat and initiates the electric current using a “deadman’s” switch foot peddle and collects stunned fish using a long-handled dip net. The duration of the current can be adjusted by the collector based on the number of stunned fish observed and the rate at which they recover and escape. The second collector will stand in the mid-section of the boat using a dip net to capture fish drifting past the boat.

In order to assess the relative availability of target species versus the need to consider targets of opportunity, all stunned fish captured will be placed in live wells; the water will be refreshed periodically to minimize stress to the captured fish resulting from depletion of dissolved oxygen. At such a point when it becomes clear that target species are available in adequate numbers to meet the sample quotas, only target species will be captured and held.

4. COLLECTION PERMIT

Permission is required to conduct these studies, and approval must be granted by the regulatory authority within the state where the study will be conducted. A Scientific Collection Permit must be applied for and the study plan approved by the proper agency or agencies prior to initiating the study.

5. DOCUMENTING SAMPLE LOCATION

The location of samples will be noted in a field notebook and on a map used in the field. Coordinates will be obtained using a hand-held Global Positioning System and recorded in the field notebook. Fish collection efforts are conducted over a general area that is sampled; therefore, specific coordinates collected will relate to the approximate center point of the collection effort for a specific location. The location should also be marked on a field map relative to a position on the shoreline. Significant events, observations, and measurements during the field investigation will also be recorded in the field notebook.

Field notebook entries will include, at a minimum, the following information:

- Author, date and time of entry (use 24-hour military time), and physical/environmental conditions during the field activity.
- Names and titles of field crew.
- Names and titles of any site visitors.
- Type of sampling activity.
- Location of sampling activity, sampling time, water temperature, dissolved oxygen, conductivity, and pH.
- Field observations.

- For each submitted fish sample, the number of fish included, and the species name, weight, and size of each fillet, whole body, or other appropriate measures included in the composite analytical sample. Also, whole body characteristics should be included for each fish fillet collected

- Any deformities (lesions, sores, etc.) observed on any of the fish.

- Analyses to be performed on these fish samples.

- If any page is not completely filled in, a line should be drawn through the unused portion and initialed by the person keeping the log.

- Decontamination procedures.

- Documentation of any deviations from the Field Sampling Plan.

- Unusual incidents or accidents.

Original data recorded in these field notebooks, field data sheets, sample labels, or COCs should be made using indelible dark blue or black ink. None of these documents will be destroyed or discarded, even if they are illegible or contain inaccuracies.

If an error is made on any of these documents, the error will be corrected by crossing a line through the error and entering the correct information, then initialing and dating the cross-out. Any subsequent error discovered on one of these documents will be corrected by the person who made the entry, and will be initialed and dated as appropriate.

Photographs will be taken of field activities. Each photograph will have an entry in the field logbook indicating the location, date, and time it was taken. Photographs of activities such as biota sampling locations will be taken to record activities.

6. FIELD HANDLING AND DATA COLLECTION

Individual fish used for a sample will be measured for total length and weighed. Each fish will be rinsed with water to remove any sediment or detritus and inspected for anomalies and the information recorded in the field notebook and representative datasheet if applicable. Targeted species that will be used for sample preparation will be evaluated for their suitability as part of a composite sample.

Sample preparation will be specific to the laboratory conducting the tissue analysis. Selected specimens will be either wrapped in aluminum foil and bagged plastic bags or bagged in plastic bags. All samples will be labeled with sample number, location, number of fish in composite, date, taxa, initials of the sampling crew, and disposition (i.e., fillet or whole body) and placed in

a cooler of ice. At the end of each day, fish will be processed (be it filleted or whole body), composited, and either frozen and held for shipping at a later date or shipped to the laboratory immediately.

A composite sample will consist of 3-5 fish collected at a specific location and of a specific trophic level (predator, bottom feeder). All information regarding sample contents will be recorded in the field notebook and a representative datasheet.

7. SAMPLE HANDLING

If the project study plan specifies fillets, then samples of target species will be cut either by the field crew at the end of each day or, if preferred, by the analytical laboratory. This decision will be dictated by the laboratory prior to the initiation of the field sampling effort. Fillet samples will be prepared according to the *EPA Guidance for Assessing Chemical Contamination Data for Use in Fish Advisories Volume 1 Fish Sampling and Analysis – Third Edition (November)* (EPA 823-B-00-007) (U.S. EPA 2000).

Fish should be scaled prior to being filleted; do not remove the skin. To scale fish, place on a clean glass or PTFE cutting board. Run the edge of the knife blade from the tail toward the head to scrape off the scales. Cross-contamination can be avoided by rinsing the cutting board and knife with acid and distilled water. After scaling, rinse the fish with distilled water and place on a clean cutting board; the fish is then ready for filleting.

Prior to filleting, hands should be washed and rinsed with distilled water and, if gloves are worn, they should be talc-free and dust-free. Place fish on a clean glass or PTFE cutting board. Care should be taken to avoid puncturing internal organs because the fillet tissue can become contaminated from materials released from the organs. If organs are punctured, the fillet tissue should be rinsed in contaminant-free deionized distilled water and blotted dry.

Fillets should be cut as follows:

- Make a diagonal cut from the base of the cranium following just behind the gill to the ventral side just behind the pectoral fin.
- Remove the flesh and ribcage from one side of the fish by cutting from the cranium along the spine and dorsal rays to the caudal fin.
- The skin should be scored prior to homogenizing the entire fillet.

Fillets should be weighed and recorded to the nearest gram. Sample weights will vary according to project specifications. Residue from the filleting process should be placed in a double-bagged plastic trash bag and disposed of properly in a dumpster.

8. COMPOSITING TECHNIQUES AND RECOMMENDATIONS

The sample weight/size is project specific. Following is the compositing technique assuming a 200-g (0.44-lb) sample weight. The composited sample should contain, at a minimum, three individuals of similar size. The number and length of individuals or fillets should be recorded for each composite sample.

All samples in a composite sample should be similar in length such that the product of the length of the smallest individual divided by the length of the largest individual multiplied by 100 is greater than or equal to 75 percent:

$$\frac{Minimum\ Size}{Maximum\ Size} \times 100 = _____ \geq 75\%$$

This will ensure similarities in age and exposure to the area in question (U.S. EPA 2000).

9. SAMPLE CONTAINERS AND PRESERVATION TECHNIQUES

Composite fillet samples will be individually labeled and placed in the appropriate container; the container type will be dictated by the analytical laboratory. Whole-body fish composites will be individually labeled, wrapped in aluminum foil, and double-bagged in clean plastic, zip-lock airtight bags as preferred by the analytical laboratory. Individual sample labels will contain the following information:

- Project number
- Sample location and station number
- Species (genus and specific epithet)
- Individual sample number
- Total number of individuals in composite
- Sampler's initials
- Date and time of sample processing.

For shipping to the analytical laboratory, a 3-in. layer of inert cushioning material (bubble wrap) will be placed on the bottom of a waterproof cooler or ice chest. The samples will then be placed on the cushioning material and surrounded with ice double bagged in plastic bags to maintain a temperature of 4°C or lower. A temperature blank should be included in each cooler. COC records will be completed at the time of sample preparation and compositing. All samples will be sent by overnight express to the laboratory or hand-delivered the day after collection. The COC must be signed showing any sample transfer and placed in a plastic bag taped to the inside lid of the cooler. Each cooler should have a COC for those samples contained in that cooler. The cooler/ice chest drain should be taped shut. Appropriate shipping labels are attached to the top of the cooler and "This Side Up" labels placed on all four sides of the cooler/ice chest.

Lastly "Fragile" labels should be placed on at least two locations of the cooler/ice chest. Be aware of any weight limitations that a shipper may have for shipping the cooler/ice chests.

10. REFERENCES

EA Engineering, Science, and Technology, Inc. 2007a. *Standard Operating Procedure No. 001 for Sample Labels*. Revision 0. August.

———. 2007b. *Standard Operating Procedure No. 002 for Chain-of-Custody Form*. Revision 0. August.

———. 2007c. *Standard Operating Procedure No. 004 for Sample Packing and Shipping*. Revision 0. August.

Murphy, B.R. and D.W. Willis. 1996. *Fisheries Techniques: Second Edition*. American Fisheries Society, Bethesda, Maryland. pp. 173-197.

U.S. Environmental Protection Agency (U.S. EPA). 2000. *EPA Guidance for Assessing Chemical Contamination Data for Use in Fish Advisories Volume 1 Fish Sampling and Analysis – Third Edition* (EPA 823-B-00-007). November.

APPENDIX B

Sample Design Matrix

Appendix B

SAMPLING AND DESIGN MATRIX
FALCON REFINERY SUPERFUND SITE
INGLESIDE, TEXAS

SAMPLING AREA	SAMPLE METHOD	JUDGMENTAL OR RANDOM	SAMPLE INTERVAL (feet bgs)	FIELD SCREENING	SAMPLE COLLECTION DESCRIPTION/ FREQUENCY	ANALYSES					
						TCL VOC	TCL SVOC	TAL METALS	PCBs	PCBS CONGENERS	HERBICIDES AND PESTICIDES
SOIL SAMPLES - SURFACE AND SUBSURFACE											
DIRECT PUSH BORINGS											
AOC-1N	Direct Push - Continuous Sampling with Acetate Linear	Judgmental	0 to 0.5	Continuous screening with FID/PID at 2-foot intervals from surface to total depth	VOCs - collect grab sample from 0 to 0.5 feet and 0.5 to 2 feet. From 2 feet to top of water table collect sample from interval with highest PID measurement. For all other analysis homogenize sample interval and collect sample.	8	8	8	2	1	2
			0.5 to 2			8	8	8	2	1	2
			2 to top of water table			8	8	8	0	0	2
AOC-1NS		Judgmental	0 to 0.5			12	12	12	2	1	2
			0.5 to 2			12	12	12	2	1	2
			2 to top of water table			12	12	12	0	0	2
AOC-2		Judgmental	0 to 0.5			6	6	6	1	1	1
			0.5 to 2			6	6	6	1	0	1
			2 to top of water table			6	6	6	0	0	1
AOC-3		Random	0 to 0.5			25	25	25	4	2	4
			0.5 to 2			25	25	25	4	2	4
			2 to top of water table			25	25	25	0	0	4
AOC-4		Judgmental	0 to 0.5			5	5	5	1	1	1
			0.5 to 2			5	5	5	1	0	1
			2 to top of water table			5	5	5	0	0	1
AOC-6		Judgmental	0 to 0.5			2	2	2	1	1	1
			0.5 to 2			2	2	2	1	0	1
			2 to top of water table			2	2	2	0	0	1
AOC-7		Judgmental	0 to 0.5			2	2	2	1	1	1
			0.5 to 2			2	2	2	1	0	1
			2 to top of water table			2	2	2	0	0	1
Background		Judgmental	0 to 0.5			10	10	10	10	10	10
			0.5 to 2			10	10	10	10	10	10
			2 to top of water table			10	10	10	10	10	10
TOTAL DIRECT PUSH BORING SOIL SAMPLES						**210**	**210**	**210**	**54**	**42**	**66**
MONITORING WELL BORINGS											
AOC-1N	Hollow Stem Auger - Continuous sampling with split spoon or continuous sampling device	Judgmental	0 to 0.5	Continuous screening with FID/PID at 2-foot intervals from surface to total depth	VOCs - collect grab sample from 0 to 0.5 feet and 0.5 to 2 feet. From 2 feet to top of water table collect sample from interval with highest PID measurement. For all other analysis homogenize sample interval and collect sample.	5	5	5	1	1	1
			0.5 to 2			5	5	5	0	0	1
			2 to top of water table			5	5	5	0	0	1
AOC-1S		Judgmental	0 to 0.5			7	7	7	1	1	1
			0.5 to 2			7	7	7	1	0	1
			2 to top of water table			7	7	7	0	0	1
AOC-2		Judgmental	0 to 0.5			1	1	1	1	1	1
			0.5 to 2			1	1	1	0	0	0
			2 to top of water table			1	1	1	0	0	0
AOC-3		Judgmental	0 to 0.5			3	3	3	1	0	1
			0.5 to 2			3	3	3	0	0	0
			2 to top of water table			3	3	3	0	0	0
AOC-4		Judgmental	0 to 0.5			1	1	1	1	0	1
			0.5 to 2			1	1	1	0	0	0
			2 to top of water table			1	1	1	0	0	0
TOTAL MONITORING WELL BORING SOIL SAMPLES						**51**	**51**	**51**	**6**	**3**	**9**
TOTAL SURFACE AND SUBSURFACE SOIL SAMPLES						**261**	**261**	**261**	**60**	**45**	**75**

Appendix B

SAMPLING AND DESIGN MATRIX
FALCON REFINERY SUPERFUND SITE
INGLESIDE, TEXAS

SAMPLING AREA	SAMPLE METHOD	JUDGMENTAL OR RANDOM	SAMPLE INTERVAL (feet bgs)	FIELD SCREENING	SAMPLE COLLECTION DESCRIPTION/ FREQUENCY	ANALYSES					
						TCL VOC	TCL SVOC	TAL METALS	PCBs	PCBS CONGENERS	HERBICIDES AND PESTICIDES
QC FOR SURFACE AND SUBSURFACE SOIL SAMPLES											
QC MS/MSD* {1/20 organics}		Various	Various	Not Applicable	As stated above for each designated sample location	14	14	N/A	3	3	4
QC MS/MD* {1/20 inorganics}		Various	Various			N/A	N/A	14	N/A	N/A	N/A
QC field duplicate {1/10}		Various	Various			24	24	24	6	5	8
QC trip blank		N/A	N/A		1 per VOC cooler	22	N/A	N/A	N/A	N/A	N/A
QC Equipment Rinsate		N/A	N/A		1 per day per nondedicated equipment	25	25	25	25	25	25
TOTAL QC						**85**	**63**	**63**	**34**	**33**	**37**
TOTAL SOIL SAMPLES INCLUDING QC						**346**	**324**	**324**	**94**	**78**	**112**
SEDIMENT SAMPLES											
AOC-3	Ponar/Sediment Coring Device	Judgmental	0 to 0.5	Not Applicable	Grab Samples	4	4	4	1	1	1
AOC-5	Ponar/Sediment Coring Device	Judgmental	0 to 0.5			10	10	10	2	2	2
Background	Ponar/Sediment Coring Device	Judgmental	0 to 0.5		Grab Samples - 10 samples collected from marine/coastal and 10 from the wetlands	20	20	20	20	20	20
TOTAL SEDIMENT SAMPLES						**34**	**34**	**34**	**23**	**23**	**23**
QC FOR SEDIMENT SAMPLES											
QC MS/MSD* {1/20 organics}		Various	Various	Not Applicable	As stated above for each designated sample location	2	2	N/A	2	2	2
QC MS/MD* {1/20 inorganics}		Various	Various			N/A	N/A	2	N/A	N/A	N/A
QC field duplicate {1/10}		Various	Various			4	4	4	3	3	3
QC trip blank		N/A	N/A		1 per VOC cooler	3	N/A	N/A	N/A	N/A	N/A
QC equipment rinsate		N/A	N/A		1 per day per nondedicated equipment	8	8	8	8	8	8
TOTAL QC						**17**	**14**	**14**	**13**	**13**	**13**
TOTAL SEDIMENT SAMPLES INCLUDING QC						**51**	**48**	**48**	**36**	**36**	**36**
SURFACE WATER SAMPLES											
AOC-3	Disposable Dipper	Random	Not Applicable	pH, specific conductance, temperature, TDS, ORP, and turbidity	Grab Samples	29	29	29	6	2	6
		Judgmental	Not Applicable			4	4	4	1	1	1
AOC-5		Judgmental	Not Applicable			10	10	10	2	2	2
Background		Judgmental	Not Applicable		Grab Samples - 10 samples collected from marine/coastal and 10 from the wetlands	20	20	20	20	20	20
TOTAL SURFACE WATER SAMPLES						**63**	**63**	**63**	**29**	**25**	**29**
QC FOR SURFACE WATER SAMPLES											
QC MS/MSD* {1/20 organics}		Various	Various	Not Applicable	As stated above for each designated sample location	3	3	N/A	2	2	2
QC MS/MD* {1/20 inorganics}		Various	Various			N/A	N/A	3	N/A	N/A	N/A
QC field duplicate {1/10}		Various	Various			6	6	6	3	3	3
QC trip blank		N/A	N/A		1 per VOC cooler	6	N/A	N/A	N/A	N/A	N/A
QC equipment rinsate		N/A	N/A		1 per day per nondedicated equipment	N/A	N/A	N/A	N/A	N/A	N/A
TOTAL QC						**15**	**9**	**9**	**5**	**5**	**5**
TOTAL SURFACE WATER SAMPLES INCLUDING QC						**78**	**72**	**72**	**34**	**30**	**34**
GROUND WATER SAMPLES											

Appendix B

SAMPLING AND DESIGN MATRIX
FALCON REFINERY SUPERFUND SITE
INGLESIDE, TEXAS

SAMPLING AREA	SAMPLE METHOD	JUDGMENTAL OR RANDOM	SAMPLE INTERVAL (feet bgs)	FIELD SCREENING	SAMPLE COLLECTION DESCRIPTION/ FREQUENCY	ANALYSES					
						TCL VOC	TCL SVOC	TAL METALS	PCBs	PCBS CONGENERS	HERBICIDES AND PESTICIDES
AOC-1N	Low Flow Sampling	Judgmental	Not Applicable	Not Applicable	Grab Sample	5	5	5	1	1	1
AOC-1S						7	7	7	1	0	0
AOC-2						1	1	1	1	1	1
AOC-3						3	3	3	0	0	0
AOC-4						1	1	1	0	0	0
Background						10	10	10	10	10	10
TOTAL GROUND WATER SAMPLES						**27**	**27**	**27**	**13**	**12**	**12**
QC FOR GROUND WATER SAMPLES											
QC MS/MSD* {1/20 organics}		Various	Various	Not Applicable	As stated above for each designated sample location	2	2	N/A	1	1	1
QC MS/MD* {1/20 inorganics}		Various	Various			N/A	N/A	2	N/A	N/A	N/A
QC field duplicate {1/10}		Various	Various			3	3	3	2	2	2
QC trip blank		N/A	N/A		1 per VOC cooler	3	N/A	N/A	N/A	N/A	N/A
QC equipment rinsate		N/A	N/A		1 per day per nondedicated equipment	8	8	8	8	8	8
TOTAL QC						**16**	**13**	**13**	**11**	**11**	**11**
TOTAL GROUND WATER SAMPLES INCLUDING QC						**43**	**40**	**40**	**24**	**23**	**23**

NOTE:

AOC	Area of concern				
bgs	below ground surface	N/A	Not applicable	SVOC	Semi-volatile organic compound
FID	Flam iononization detector	ORP	Oxygen reduction potential	TAL	Target analyte list
MD	Matrix duplicate	PID	Photo-ionization detector	TDS	Total dissolved solids
MS	Matrix spike	PCB	Polychlorinated biphenyls	TCL	Target compound list
MSD	Matrix spike duplicate	QC	Quality control	VOC	Volatile organic compound