REDACTED VERSION

June 09

[redacted]

9542956

EPAPA010000133

Out-bound Manifest

(Form designed for use on elite (12-pitch) typewriter.) Form Approved. OMB No. 2050-0039

ZARDOUS NIFEST	1. Generator ID Number TXD988076295	2. Page 1 of 1	3. Emergency Response Phone (409) 985-4200	4. Manifest Tracking Number 004248277 JJK

ame and Mailing Address State ID 25491 Kinder Morgan
3450 South Gulfway Drive
Port Arthur, TX 77641
(409) 985-4200
e: (409) 985-4200

Generator's Site Address (if different than mailing address)

Transport Company Name: Services, Inc State ID 30900 U.S. EPA ID Number TXD008950461

Company Name U.S. EPA ID Number

Designated Facility Name and Site Address State ID 39098 U.S. EPA ID Number

5
(409) 794-3119 N/A

OT Description (including Proper Shipping Name, Hazard Class, ID Number, ng Group (if any))	10. Containers No.	10. Containers Type	11. Total Quantity	12. Unit Wt./Vol.	13. Waste Codes
mable liquids, n.o.s. (wastewater containing methanol), 3, G I	1	TT	47840	P	D001

g Instructions and Additional Information
TEX (PITEX - Port Arthur)
ethanol Waste Water Newport # CES Job # 79940

H 2) 23491 6) 24910 3) 24618 4) 5M6gal

'S/OFFEROR'S CERTIFICATION: I hereby declare that the contents of this consignment are fully and accurately described above by the proper shipping name, and are classified, packaged, beled/placarded, and are in all respects in proper condition for transport according to applicable international and national governmental regulations. If export shipment and I am the Primary tify that the contents of this consignment conform to the terms of the attached EPA Acknowledgment of Consent.
e waste minimization statement identified in 40 CFR 262.27(a) (if I am a large quantity generator) or (b) (if I am a small quantity generator) is true.

s Printed/Typed Name: Mason Signature: [signature] Month 12 Day 09 Year

pments ☐ Import to U.S. ☐ Export from U.S. Port of entry/exit:
re (for exports only): Date leaving U.S.:

owledgment of Receipt of Materials

d/Typed Name: B. Brown Signature: [signature] Month 12 Day 09 Year

d/Typed Name Signature Month Day Year

lication Space ☐ Quantity ☐ Type ☐ Residue ☐ Partial Rejection ☐ Full Rejection

Manifest Reference Number:

y (or Generator) U.S. EPA ID Number

rnate Facility (or Generator) Month Day Year

Report Management Method Codes (i.e., codes for hazardous waste treatment, disposal, and recycling systems)

1.	2.	3.	4.

y Owner or Operator Certification

EPAPA010000135

CES Environmental Services, Inc.

4904 Griggs Road
Houston, TX 77021
Tel. (713) 676-1460
Fax. (713) 676-1676

Transportation Work Ticket

Folder ID : KMTEX (KMTEX - Port Arthur - TX) Methanol Wastewater

Date : 6/2/2009 **Manifest # :** 004248277 JJK

Client : KMTEX **Ticket :** 86939

Phone : 4099854200 **Consignee :** Newpark Environmental Services, LLC

Transporter : CES Environmental Services, Inc.

Signature R Jamison **Signature**

Leave CES Yard :		**Arrive At Destination**	
Arrive At Customer :	15:45	**Begin Unloading :**	
Begin Loading :		**Finish Unloading :**	
Finish Loading :	16:40	**Leave Destination :**	
Leave Customer :		**Arrive At CES Yard :**	17:00

Customer PO #:

Total Hours:

CES Unload: ☐

Gross Weight :	78,440	**Ending Odometer :**	114818
Tare Weight :	30,600	**Begining Odometer :**	114817
Net Weight :	47,840	**Total Miles :**	1

Driver : Brown, Leroy **Tractor # :** 285 **Tote # :**

Signature : LeRoy Brown **Trailer # :** 227 **Box # :**

Job Comments/Equipment : Preload [redacted] [redacted].

Offload is Job # 87031

White (CES Office) Yellow (CES Office / Billing) Pink (CES Office / IFTA) Golden Rod (Customer)

DATE 6-2-09 NO. 52571

KMTEX
P.O. BOX 1421
2450 S. GULFWAY DRIVE
PORT ARTHUR, TEXAS 77640

ID 227

GROSS 30600 lb INBOUND

06/02/2009 03:46PM

ID 227

GROSS 78440 lb
TARE 30600 lb RECALLED
NET 47840 lb

06/02/2009 04:42PM

DRIVER ON ☐ OFF ☑

WEIGHED BY R Jenson

Please print or type. (Form designed for use on elite (12-pitch) typewriter.) Form Approved. OMB No. 2050-0039

UNIFORM HAZARDOUS WASTE MANIFEST

1. Generator ID Number: TXD988076295
2. Page 1 of 1
3. Emergency Response Phone: (409) 985-4200
4. Manifest Tracking Number: **004248276 JJK**

GENERATOR

5. Generator's Name and Mailing Address: State ID: 23491
Generator's Phone: (409) 985-4200

5b. Generator's Site Address (if different than mailing address)
2450 South Gulfway Drive
Port Arthur, TX 77641
(409) 985-4200

6. Transporter 1 Company Name: CES Environmental Services, Inc State ID 30900 U.S. EPA ID Number: TXD008930461

7. Transporter 2 Company Name U.S. EPA ID Number

8. Designated Facility Name and Site Address: State ID 39098 U.S. EPA ID Number
26400 Wilber Rd
Winnie TX, 77665
Facility's Phone: (409) 794-3119 N/A

9a. HM	9b. U.S. DOT Description (including Proper Shipping Name, Hazard Class, ID Number, and Packing Group (if any))	10. Containers No.	Type	11. Total Quantity	12. Unit Wt./Vol.	13. Waste Codes
	1. Waste flammable liquids, n.o.s. (wastewater containing methanol), 3, UN1993, PG I	1		48000		D001 D011
	2.					
	3.					
	4.					

14. Special Handling Instructions and Additional Information
Folder ID: KMTEX (KMTEX - PORT ARTHUR) Newpark # CES Job # - [illegible]
Methanol Waste Water
1) 040705061SH 23491 6) 30900 8) 39098 4) 5859 gal

15. **GENERATOR'S/OFFEROR'S CERTIFICATION:** I hereby declare that the contents of this consignment are fully and accurately described above by the proper shipping name, and are classified, packaged, marked and labeled/placarded, and are in all respects in proper condition for transport according to applicable international and national governmental regulations. If export shipment and I am the Primary Exporter, I certify that the contents of this consignment conform to the terms of the attached EPA Acknowledgment of Consent.
I certify that the waste minimization statement identified in 40 CFR 262.27(a) (if I am a large quantity generator) or (b) (if I am a small quantity generator) is true.

Generator's/Offeror's Printed/Typed Name: R Jamison Signature: R Jamison Month 6 Day 2 Year 09

INT'L

16. International Shipments ☐ Import to U.S. ☐ Export from U.S. Port of entry/exit:
Transporter signature (for exports only): Date leaving U.S.:

TRANSPORTER

17. Transporter Acknowledgment of Receipt of Materials
Transporter 1 Printed/Typed Name: John Brown Signature: [signature] Month 6 Day 2 Year 09
Transporter 2 Printed/Typed Name Signature Month Day Year

DESIGNATED FACILITY

18. Discrepancy
18a. Discrepancy Indication Space ☐ Quantity ☐ Type ☐ Residue ☐ Partial Rejection ☐ Full Rejection
Manifest Reference Number:
18b. Alternate Facility (or Generator) U.S. EPA ID Number
Facility's Phone:
18c. Signature of Alternate Facility (or Generator) Month Day Year

19. Hazardous Waste Report Management Method Codes (i.e., codes for hazardous waste treatment, disposal, and recycling systems)
1. H134 2. 3. 4.

20. Designated Facility Owner or Operator: Certification of receipt of hazardous materials covered by the manifest except as noted in Item 18a
Printed/Typed Name: Vicki Hopper Signature: [signature] Month 6 Day 2 Year 09

EPA Form 8700-22 (Rev. 3-05) Previous editions are obsolete. **TRANSPORTER'S COPY**

CES Environmental Services, Inc.

4904 Griggs Road
Houston, TX 77021
Tel. (713) 676-1460
Fax. (713) 676-1676

Transportation Work Ticket

Folder ID : KMTEX (KMTEX - Port Arthur - TX) Methanol Wastewater

Date : 6/2/2009 **Manifest # :** 00424827 6 5 0 K

Client : KMTEX **Ticket :** 86936

Phone : 4099854200 **Consignee :** Newpark Environmental Services, LLC

Transporter : CES Environmental Services, Inc.

Signature [signature] **Signature** [signature]

Leave CES Yard :		**Arrive At Destination**	14:30
Arrive At Customer :	12:40	**Begin Unloading :**	
Begin Loading :	12:55	**Finish Unloading :**	
Finish Loading :	13:35	**Leave Destination :**	15:15
Leave Customer :	13:45	**Arrive At CES Yard :**	

Customer PO #:

Total Hours:

CES Unload: ☐

Gross Weight :	78,640	**Ending Odometer :**	114917
Tare Weight :	30,640	**Begining Odometer :**	114741
Net Weight :	48,000	**Total Miles :**	76

Driver : Brown, Leroy **Tractor # :** ~~285~~ 255 **Tote # :**

Signature : Leroy Brown **Trailer # :** 227 **Box # :**

6 2 09

Job Comments/Equipment :

White (CES Office) Yellow (CES Office / Billing) Pink (CES Office / IFTA) Golden Rod (Customer)

METTLER TOLEDO

AUTHORIZED SIGNATURE

Newpark Env. Services LC CN: 58504
26400 WILBER RD
WINNE TX 77665

ID	0	GROSS	78860 lb	(1)
VEHICLE	213	TARE	30820 lb	
TIME	3:18 PM	NET	48040 lb	
DATE	06 02 09			

lease print or type. (Form designed for use on elite (12-pitch) typewriter.) Form Approved. OMB No. 2050-0039

UNIFORM HAZARDOUS WASTE MANIFEST	1. Generator ID Number TXD988076295	2. Page 1 of 1	3. Emergency Response Phone (409) 985-4200	4. Manifest Tracking Number 004248277 JJK

5. Generator's Name and Mailing Address: KMTEX State ID: 23491

Generator's Site Address (if different than mailing address): KMTEX, 2420 South Gulfway Drive, Port Arthur, TX 77641

Generator's Phone: (409) 985-4200 | (409) 985-4200

6. Transporter 1 Company Name: CES Environmental Services, Inc State ID 30900 U.S. EPA ID Number: TXD008950461

7. Transporter 2 Company Name U.S. EPA ID Number

8. Designated Facility Name and Site Address: CEC, 6400 Wilber Rd, Winnie TX, 77665 State ID 39098 U.S. EPA ID Number N/A

Facility's Phone: (409) 794-3119

9a. HM	9b. U.S. DOT Description (including Proper Shipping Name, Hazard Class, ID Number, and Packing Group (if any))	10. Containers No.	Type	11. Total Quantity	12. Unit Wt./Vol.	13. Waste Codes
	Waste flammable liquids, n.o.s. (wastewater containing methanol), 3, UN1993, PG I	1	TT	47840 P		D001
	2.					
	3.					
	4.					

14. Special Handling Instructions and Additional Information

Profile ID: KMTEX (KMTEX - Port Arthur) Newpark # CES Job # 76940

Methanol Waste Water

0407050615H 2) 23491 6) 30900 8) 39098 4) 5716gal

15. **GENERATOR'S/OFFEROR'S CERTIFICATION:** I hereby declare that the contents of this consignment are fully and accurately described above by the proper shipping name, and are classified, packaged, marked and labeled/placarded, and are in all respects in proper condition for transport according to applicable international and national governmental regulations. If export shipment and I am the Primary Exporter, I certify that the contents of this consignment conform to the terms of the attached EPA Acknowledgment of Consent.
I certify that the waste minimization statement identified in 40 CFR 262.27(a) (if I am a large quantity generator) or (b) (if I am a small quantity generator) is true.

Generator's/Offeror's Printed/Typed Name: Bamison Signature: Month 4 Day 2 Year 09

16. International Shipments ☐ Import to U.S. ☐ Export from U.S. Port of entry/exit: Date leaving U.S.:
Transporter signature (for exports only):

17. Transporter Acknowledgment of Receipt of Materials

Transporter 1 Printed/Typed Name: LeRoy Brown Signature: Month 6 Day 2 Year 09

Transporter 2 Printed/Typed Name Signature Month Day Year

18. Discrepancy

18a. Discrepancy Indication Space ☐ Quantity ☐ Type ☐ Residue ☐ Partial Rejection ☐ Full Rejection

Manifest Reference Number:

18b. Alternate Facility (or Generator) U.S. EPA ID Number

Facility's Phone:

18c. Signature of Alternate Facility (or Generator) Month Day Year

19. Hazardous Waste Report Management Method Codes (i.e., codes for hazardous waste treatment, disposal, and recycling systems)

1. H134	2.	3.	4.

20. Designated Facility Owner or Operator: Certification of receipt of hazardous materials covered by the manifest except as noted in Item 18a

Printed/Typed Name: Nick Hassan Signature: Month 6 Day 3 Year 09

Form 8700-22 (Rev. 3-05) Previous editions are obsolete. **TRANSPORTER'S COPY**

EPAPA010000141

CES Environmental Services, Inc.

4904 Griggs Road
Houston, TX 77021
Tel. (713) 676-1460
Fax. (713) 676-1676

Transportation Work Ticket

Folder ID : KMTEX (KMTEX - Port Arthur - TX) Methanol Wastewater

Date : 6/3/2009 **Manifest # :**

Client : KMTEX **Ticket :** 87031

Phone : 4099854200 **Consignee :** Newpark Environmental Services, LLC

Transporter : CES Environmental Services, Inc.

Signature **Signature**

Leave CES Yard :		**Arrive At Destination**	1530
Arrive At Customer :		**Begin Unloading :**	1535
Begin Loading :		**Finish Unloading :**	
Finish Loading :		**Leave Destination :**	
Leave Customer :		**Arrive At CES Yard :**	

Customer PO #:

Total Hours:

CES Unload: ☐

Gross Weight :	79,160	**Ending Odometer :**	41015
Tare Weight :	31,220	**Begining Odometer :**	40956
Net Weight :	47,940	**Total Miles :**	76

Driver : Wilson, Kevin **Tractor # :** 2004 **Tote # :**

Signature : **Trailer # :** 227 **Box # :**

Job Comments/Equipment :

White (CES Office) Yellow (CES Office / Billing) Pink (CES Office / IFTA) Golden Rod (Customer)

METTLER TOLEDO

AUTHORIZED SIGNATURE

Newpark Env. Services LC CN 58545
26400 WILBER RD
WINNE TX 77665

ID	3	GROSS	79160	lb (1)
VEHICLE	333	TARE	31220	lb
TIME	4:18 PM	NET	47940	lb
DATE	06 03 09			

EPAPA010000143

Please print or type. (Form designed for use on elite (12-pitch) typewriter.)

Form Approved. OMB No. 2050-0039

UNIFORM HAZARDOUS WASTE MANIFEST

1. Generator ID Number: TXR000079307
2. Page 1 of
3. Emergency Response Phone
4. Manifest Tracking Number: **005593186 JJK**

5. Generator's Name and Mailing Address
CES Environmental Services - Port Arthur
1914 Griggs Road
Houston, TX 77021
State ID: 88885
Generator's Phone:

Generator's Site Address (if different than mailing address)
CES Environmental Services - Port Arthur
2420 Gulfway Drive
Port Arthur, TX 77640

6. Transporter 1 Company Name: CES Environmental Services, Inc. State ID 30300 — U.S. EPA ID Number: TXD008950461

7. Transporter 2 Company Name — U.S. EPA ID Number

8. Designated Facility Name and Site Address
Newport Environmental Services LLC
28400 Wilber Rd
Winnie TX, 77665
State ID 10038
Facility's Phone: (409) 734-3199
U.S. EPA ID Number: N/A

9a. HM	9b. U.S. DOT Description (including Proper Shipping Name, Hazard Class, ID Number, and Packing Group (if any))	10. Containers No.	10. Containers Type	11. Total Quantity	12. Unit Wt./Vol.	13. Waste Codes
	1. Non-RCRA/Non DOT regulated wastewater	1	TT	5000	G	9001131
	2.					
	3.					
	4.	434				

14. Special Handling Instructions and Additional Information
Profile ID: CES Environmental (CES - Port Arthur)
Class 1, Non-Hazardous Wastewater
PACES SAMPLE ID # 149/41 — CES Job # - 96962
1) 09260911808H 2) 188585 3) 6) 30900 5) 39098 4) 5053902

15. **GENERATOR'S/OFFEROR'S CERTIFICATION:** I hereby declare that the contents of this consignment are fully and accurately described above by the proper shipping name, and are classified, packaged, marked and labeled/placarded, and are in all respects in proper condition for transport according to applicable international and national governmental regulations. If export shipment and I am the Primary Exporter, I certify that the contents of this consignment conform to the terms of the attached EPA Acknowledgment of Consent.
I certify that the waste minimization statement identified in 40 CFR 262.27(a) (if I am a large quantity generator) or (b) (if I am a small quantity generator) is true.

Generator's/Offeror's Printed/Typed Name: Jay Madlock — Signature — Month 4 Day 7 Year 09

16. International Shipments ☐ Import to U.S. ☐ Export from U.S. Port of entry/exit:
Transporter signature (for exports only): Date leaving U.S.:

17. Transporter Acknowledgment of Receipt of Materials
Transporter 1 Printed/Typed Name: Kevin Wilson — Signature — Month 6 Day 3 Year 09
Transporter 2 Printed/Typed Name — Signature — Month Day Year

18. Discrepancy
18a. Discrepancy Indication Space ☐ Quantity ☐ Type ☐ Residue ☐ Partial Rejection ☐ Full Rejection
Manifest Reference Number:

18b. Alternate Facility (or Generator) — U.S. EPA ID Number
Facility's Phone:

18c. Signature of Alternate Facility (or Generator) — Month Day Year

19. Hazardous Waste Report Management Method Codes (i.e., codes for hazardous waste treatment, disposal, and recycling systems)
1. H134 2. 3. 4.

20. Designated Facility Owner or Operator: Certification of receipt of hazardous materials covered by the manifest except as noted in Item 18a
Printed/Typed Name: Vicki Hoffman — Signature — Month 6 Day 3 Year 09

GENERATOR — INT'L — TRANSPORTER — DESIGNATED FACILITY

EPA Form 8700-22 (Rev. 3-05) Previous editions are obsolete.

TRANSPORTER'S COPY

EPAPA010000144

CES Environmental Services, Inc.

4904 Griggs Road
Houston, TX 77021
Tel. (713) 676-1460
Fax. (713) 676-1676

Transportation Work Ticket

Folder ID : CES Enviornmental (CES - Port Arthur) Class 1, Non-hazardous Wastewater

Date : 6/3/2009 **Manifest # :**

Client : CES Environmental Services - Port Arthur **Ticket :** 86962

Phone : **Consignee :** Newpark Environmental Services, LLC

Transporter : CES Environmental Services, Inc.

Signature **Signature**

Leave CES Yard :	0630	**Arrive At Destination**	0830
Arrive At Customer :	0640	**Begin Unloading :**	
Begin Loading :	0650	**Finish Unloading :**	
Finish Loading :	0720	**Leave Destination :**	0940
Leave Customer :	0750	**Arrive At CES Yard :**	1015

Customer PO #:

Total Hours:

CES Unload: ☐

Gross Weight :		**Ending Odometer :**	40867
Tare Weight :		**Begining Odometer :**	40791
Net Weight :		**Total Miles :**	76

Driver : Wilson, Kevin **Tractor # :** 2004 **Tote # :**

Signature Kevin Wilson **Trailer # :** 268 **Box # :**

Job Comments/Equipment :

White (CES Office) Yellow (CES Office / Billing) Pink (CES Office / IFTA) Golden Rod (Customer)

TA 2004
TR 265

DATE 6-3-09 NO. 419

PORT ARTHUR CHEMICAL ENVIRONMENTAL SERVICES
P.O. BOX 218
2420 SOUTH GULFWAY DRIVE
PORT ARTHUR, TEXAS 77640

FACES JOB # 86962

TICKET ID 419

06/03/2009 08:13:02 am

INBOUND WT 78380 lb

0830

DRIVER ON ☐ OFF ☑ 0730

WEIGHED BY

0940
1015

Please print or type. (Form designed for use on elite (12-pitch) typewriter.)

Form Approved. OMB No. 2050-0039

UNIFORM HAZARDOUS WASTE MANIFEST

1. Generator ID Number: TXR000079307

2. Page 1 of 1

3. Emergency Response Phone:

4. Manifest Tracking Number: 005593187 JJK

5. Generator's Name and Mailing Address
CES Environmental Services - Port Arthur State ID: 88585
4424 Griggs Road
Houston, TX 77021
Generator's Phone:

Generator's Site Address (if different than mailing address)
CES Environmental Services - Port Arthur
3420 Gulfway Drive
Port Arthur, TX 77640

6. Transporter 1 Company Name
CES Environmental Services, Inc. State ID: 30900
U.S. EPA ID Number: TXD008950461

7. Transporter 2 Company Name
U.S. EPA ID Number:

8. Designated Facility Name and Site Address
Newpark Environmental Services LLC State ID: 30098
25400 Wilber Rd
Winnie TX, 77665
Facility's Phone: (409) 724-3119
U.S. EPA ID Number: N/A

9a. HM	9b. U.S. DOT Description (including Proper Shipping Name, Hazard Class, ID Number, and Packing Group (if any))	10. Containers No.	10. Containers Type	11. Total Quantity	12. Unit Wt./Vol.	13. Waste Codes	
	1. Non-RCRA/Non DOT regulated wastewater	1	TT	5251	G	00011131	
	2.						
	3.						
	4.						

14. Special Handling Instructions and Additional Information
Folder ID: CES Environmental (CES - Port Arthur) FACES SAMPLE ID #: CES Job # - 88585
Class 1 Non-Hazardous Wastewater
1) 0020091180SH 2) 188585 6/3/2009 3) 251698 4) 5251 gal

15. **GENERATOR'S/OFFEROR'S CERTIFICATION:** I hereby declare that the contents of this consignment are fully and accurately described above by the proper shipping name, and are classified, packaged, marked and labeled/placarded, and are in all respects in proper condition for transport according to applicable international and national governmental regulations. If export shipment and I am the Primary Exporter, I certify that the contents of this consignment conform to the terms of the attached EPA Acknowledgment of Consent.
I certify that the waste minimization statement identified in 40 CFR 262.27(a) (if I am a large quantity generator) or (b) (if I am a small quantity generator) is true.

Generator's/Offeror's Printed/Typed Name: Jay Matlock Signature: Month 6 Day 3 Year 09

16. International Shipments ☐ Import to U.S. ☐ Export from U.S. Port of entry/exit:
Transporter signature (for exports only): Date leaving U.S.:

17. Transporter Acknowledgment of Receipt of Materials

Transporter 1 Printed/Typed Name: Kevin Wilson Signature: Month 6 Day 3 Year 09

Transporter 2 Printed/Typed Name: Signature: Month Day Year

18. Discrepancy

18a. Discrepancy Indication Space ☐ Quantity ☐ Type ☐ Residue ☐ Partial Rejection ☐ Full Rejection

Manifest Reference Number:

18b. Alternate Facility (or Generator) U.S. EPA ID Number
Facility's Phone:

18c. Signature of Alternate Facility (or Generator) Month Day Year

19. Hazardous Waste Report Management Method Codes (i.e., codes for hazardous waste treatment, disposal, and recycling systems)

1.	2.	3.	4.
H134			

20. Designated Facility Owner or Operator: Certification of receipt of hazardous materials covered by the manifest except as noted in Item 18a

Printed/Typed Name: Victor Hatfauer Signature: Month 6 Day 3 Year 09

GENERATOR — INT'L — TRANSPORTER — DESIGNATED FACILITY

EPA Form 8700-22 (Rev. 3-05) Previous editions are obsolete.

TRANSPORTER'S COPY

EPAPA010000147

CES Environmental Services, Inc.

4904 Griggs Road
Houston, TX 77021
Tel. (713) 676-1460
Fax. (713) 676-1676

Transportation Work Ticket

Folder ID : CES Enviommental (CES - Port Arthur)
Class 1, Non-hazardous Wastewater

Date : 6/3/2009 **Manifest # :**

Client : CES Environmental Services - Port Arthur **Ticket :** 86963

Phone : **Consignee :** Newpark Environmental Services, LLC

Transporter : CES Environmental Services, Inc.

Signature **Signature**

Leave CES Yard :	1030	**Arrive At Destination**	1145
Arrive At Customer :	1035	**Begin Unloading :**	1215
Begin Loading :		**Finish Unloading :**	1235
Finish Loading :		**Leave Destination :**	1240
Leave Customer :	1100	**Arrive At CES Yard :**	1330

Customer PO #:

Total Hours:

CES Unload: ☐

Gross Weight :	78,820	**Ending Odometer :**	40941
Tare Weight :	31,820	**Begining Odometer :**	40867
Net Weight :	47,000	**Total Miles :**	74

Driver : Wilson, Kevin **Tractor # :** 2004 **Tote # :**

Signature : Kevin Wilson **Trailer # :** 268 **Box # :**

Job Comments/Equipment :

White (CES Office) Yellow (CES Office / Billing) Pink (CES Office / IFTA) Golden Rod (Customer)

14 2004
HP 368

DATE 6-3-09 NO. 420

PORT ARTHUR CHEMICAL ENVIRONMENTAL SERVICES
P.O. BOX 218
2420 SOUTH GULFWAY DRIVE
PORT ARTHUR, TEXAS 77640

PACES JOB # 56963

TICKET ID	420	
06/03/2009	11:12:43 am	
INBOUND WT	31900	lb
06/03/2009	11:45:09 am	
OUTBOUND WT	79260	lb
NET WT	47360	

DRIVER ON ☐ OFF ☑

WEIGHED BY

1145
1215
1235

Please print or type. (Form designed for use on elite (12-pitch) typewriter.)

Form Approved. OMB No. 2050-0039

UNIFORM HAZARDOUS WASTE MANIFEST

1. Generator's ID Number: TXD988076295
2. Page 1 of 1
3. Emergency Response Phone: (409) 985-4200
4. Manifest Tracking Number: **004248278 JJK**

GENERATOR

5. Generator's Name and Mailing Address: Newpark State ID: 23491
Generator's Site Address (if different than mailing address): Newpark, 2450 South Gulfway Drive, Port Arthur, TX 77641 (409) 985-4200
Generator's Phone: (409) 985-4200

6. Transporter 1 Company Name: CES Environmental Services, Inc. State ID 30900 U.S. EPA ID Number: TXD066950461

7. Transporter 2 Company Name: U.S. EPA ID Number:

8. Designated Facility Name and Site Address: Newpark Environmental Services, LLC, 39400 Wilber Rd, Winnie TX, 77665 State ID 39098 U.S. EPA ID Number: N/A
Facility's Phone: (409) 794-3119

9a. HM	9b. U.S. DOT Description (including Proper Shipping Name, Hazard Class, ID Number, and Packing Group (if any))	10. Containers No.	10. Containers Type	11. Total Quantity	12. Unit Wt./Vol.	13. Waste Codes
	Waste flammable liquids, n.o.s. (wastewater containing methanol), 3, UN1993, PG I	1	F	49280	P	D001 D019
	2.					
	3.					
	4.					

14. Special Handling Instructions and Additional Information
Profile ID: NPTEX (NPTEX - Port Arthur) Newpark #: CES Job #:
Methanol Waste Water
1) 0407050615H 2) 1)23491 6)36938 8)39098 4) 5947 gal

15. **GENERATOR'S/OFFEROR'S CERTIFICATION:** I hereby declare that the contents of this consignment are fully and accurately described above by the proper shipping name, and are classified, packaged, marked and labeled/placarded, and are in all respects in proper condition for transport according to applicable international and national governmental regulations. If export shipment and I am the Primary Exporter, I certify that the contents of this consignment conform to the terms of the attached EPA Acknowledgment of Consent.
I certify that the waste minimization statement identified in 40 CFR 262.27(a) (if I am a large quantity generator) or (b) (if I am a small quantity generator) is true.

Generator's/Offeror's Printed/Typed Name: F Samson Signature: F Samson Month 6 Day 3 Year 09

INT'L

16. International Shipments ☐ Import to U.S. ☐ Export from U.S. Port of entry/exit:
Transporter signature (for exports only): Date leaving U.S.:

TRANSPORTER

17. Transporter Acknowledgment of Receipt of Materials
Transporter 1 Printed/Typed Name: LeRoy Brown Signature: LeRoy Brown Month 6 Day 3 Year 09
Transporter 2 Printed/Typed Name: Signature: Month Day Year

DESIGNATED FACILITY

18. Discrepancy
18a. Discrepancy Indication Space ☐ Quantity ☐ Type ☐ Residue ☐ Partial Rejection ☐ Full Rejection
Manifest Reference Number:
18b. Alternate Facility (or Generator) U.S. EPA ID Number
Facility's Phone:
18c. Signature of Alternate Facility (or Generator) Month Day Year

19. Hazardous Waste Report Management Method Codes (i.e., codes for hazardous waste treatment, disposal, and recycling systems)
1. H131 2. 3. 4.

20. Designated Facility Owner or Operator: Certification of receipt of hazardous materials covered by the manifest except as noted in Item 18a
Printed/Typed Name: Vicki Hoffmeier Signature: Month 6 Day 3 Year 09

EPA Form 8700-22 (Rev. 3-05) Previous editions are obsolete.

TRANSPORTER'S COPY

EPAPA010000150

CES Environmental Services, Inc.

4904 Griggs Road
Houston, TX 77021
Tel. (713) 676-1460
Fax. (713) 676-1676

Transportation Work Ticket

Folder ID : KMTEX (KMTEX - Port Arthur - TX) Methanol Wastewater

Date : 6/3/2009 **Manifest # :** 004248278 JJK

Client : KMTEX **Ticket :** 86934

Phone : 4099854200 **Consignee :** Newpark Environmental Services, LLC

Transporter : CES Environmental Services, Inc.

Signature R Jenson **Signature** [illegible]

Leave CES Yard :		Arrive At Destination	10:00
Arrive At Customer :	7:00	Begin Unloading :	
Begin Loading :	8:30	Finish Unloading :	
Finish Loading :	9:05	Leave Destination :	10:45
Leave Customer :	9:15	Arrive At CES Yard :	

Customer PO #:

Total Hours:

CES Unload: ☐

Gross Weight :	77,080	Ending Odometer :	114897
Tare Weight :	27,700	Begining Odometer :	114818
Net Weight :	49,380	Total Miles :	79

Driver : Brown, Leroy **Tractor # :** ~~285~~ 299 **Tote # :**

Signature : [illegible] **Trailer # :** ~~227~~ 267-225 **Box # :**

Job Comments/Equipment : Trailer was rejected. Returned at 8:05 Normal loading.

White (CES Office) Yellow (CES Office / Billing) Pink (CES Office / IFTA) Golden Rod (Customer)

METTLER TOLEDO

AUTHORIZED SIGNATURE

Newpark Env. Services LC CN 58520
26400 WILBER RD

WINNE TX 77665

ID	1	GROSS	77240 lb	(1)
VEHICLE	307	TARE	27880 lb	
TIME	10:49 AM	NET	49360 lb	
DATE	06 03 09			

Please print or type. (Form designed for use on elite (12-pitch) typewriter.)

Form Approved. OMB No. 2050-0039

UNIFORM HAZARDOUS WASTE MANIFEST

1. Generator ID Number: TXD999076295
2. Page 1 of 1
3. Emergency Response Phone: (409) 985-4200
4. Manifest Tracking Number: 004248279 JJK

GENERATOR

5. Generator's Name and Mailing Address: State ID 23491
Generator's Site Address (if different than mailing address): 2450 South Gulfway Drive, Port Arthur, TX 77641
Generator's Phone: (409) 985-4200 (409) 985-4200

6. Transporter 1 Company Name: CES Environmental Services, Inc. State ID 30900 U.S. EPA ID Number: TXD008950461

7. Transporter 2 Company Name: U.S. EPA ID Number:

8. Designated Facility Name and Site Address: State ID 39098
26900 Wilber Rd
Winnie TX, 77665
Facility's Phone: (409) 794-3119
U.S. EPA ID Number: N/A

9a. HM	9b. U.S. DOT Description (including Proper Shipping Name, Hazard Class, ID Number, and Packing Group (if any))	10. Containers No.	10. Containers Type	11. Total Quantity	12. Unit Wt./Vol.	13. Waste Codes
	1. Waste flammable liquids, n.o.s. (wastewater containing methanol), 3, UN1993, PG I	1		4950		D001 D039
	2.					
	3.					
	4.					

14. Special Handling Instructions and Additional Information
Methanol Waste Water
Newpark # CES Inc # 24732
1) 0407050815H 2) 1) 23491 6) 30903 8) 39095 4) 594 Gal

15. **GENERATOR'S/OFFEROR'S CERTIFICATION:** I hereby declare that the contents of this consignment are fully and accurately described above by the proper shipping name, and are classified, packaged, marked and labeled/placarded, and are in all respects in proper condition for transport according to applicable international and national governmental regulations. If export shipment and I am the Primary Exporter, I certify that the contents of this consignment conform to the terms of the attached EPA Acknowledgment of Consent.
I certify that the waste minimization statement identified in 40 CFR 262.27(a) (if I am a large quantity generator) or (b) (if I am a small quantity generator) is true.

Generator's/Offeror's Printed/Typed Name: [illegible] Signature: [illegible] Month 6 Day 3 Year 09

INT'L

16. International Shipments ☐ Import to U.S. ☐ Export from U.S. Port of entry/exit:
Transporter signature (for exports only): Date leaving U.S.:

TRANSPORTER

17. Transporter Acknowledgment of Receipt of Materials
Transporter 1 Printed/Typed Name: LeRoy Brown Signature: LeRoy Brown Month 6 Day 3 Year 09
Transporter 2 Printed/Typed Name: Signature: Month Day Year

DESIGNATED FACILITY

18. Discrepancy
18a. Discrepancy Indication Space ☐ Quantity ☐ Type ☐ Residue ☐ Partial Rejection ☐ Full Rejection
Manifest Reference Number:
18b. Alternate Facility (or Generator) U.S. EPA ID Number
Facility's Phone:
18c. Signature of Alternate Facility (or Generator) Month Day Year

19. Hazardous Waste Report Management Method Codes (i.e., codes for hazardous waste treatment, disposal, and recycling systems)
1. H134 2. 3. 4.

20. Designated Facility Owner or Operator: Certification of receipt of hazardous materials covered by the manifest except as noted in Item 18a
Printed/Typed Name: Vick Hobauer Signature: [illegible] Month 6 Day 3 Year 09

EPA Form 8700-22 (Rev. 3-05) Previous editions are obsolete.

TRANSPORTER'S COPY

EPAPA010000153

CES Environmental Services, Inc.

4904 Griggs Road
Houston, TX 77021
Tel. (713) 676-1460
Fax. (713) 676-1676

Transportation Work Ticket

Folder ID : KMTEX (KMTEX - Port Arthur - TX) Methanol Wastewater

Date : 6/3/2009 **Manifest # :** 004248279 JJK

Client : KMTEX **Ticket :** 86938

Phone : 4099854200 **Consignee :** Newpark Environmental Services, LLC

Transporter : CES Environmental Services, Inc.

Signature **Signature**

Leave CES Yard :		**Arrive At Destination**	13:30
Arrive At Customer :	11:30	**Begin Unloading :**	
Begin Loading :	11:45	**Finish Unloading :**	
Finish Loading :	12:25	**Leave Destination :**	14:00
Leave Customer :	12:45	**Arrive At CES Yard :**	

Customer PO #:

Total Hours:

CES Unload: ☐

Gross Weight :	77,080	**Ending Odometer :**	114973
Tare Weight :	27,580	**Begining Odometer :**	114897
Net Weight :	49,500	**Total Miles :**	76

Driver : Brown, Leroy **Tractor # :** ~~285~~ 299 **Tote # :**

Signature : **Trailer # :** ~~227~~ 225 **Box # :**

Job Comments/Equipment : Sealed in & Spot Wagon Normal loading.

White (CES Office) Yellow (CES Office / Billing) Pink (CES Office / IFTA) Golden Rod (Customer)

DATE 6/3/09 NO. 52587

KMTEX
P.O. BOX 1421
2450 S. GULFWAY DRIVE
PORT ARTHUR, TEXAS 77640

ID 225

GROSS 27580 lb INBOUND

06/03/2009 11:27AM

ID 225

GROSS 77080 lb
TARE 27580 lb RECALLED
NET 49500 lb

06/03/2009 12:29PM

DRIVER ON ☐ OFF ☑

WEIGHED BY

EPAPA010000155

Please print or type. (Form designed for use on elite (12-pitch) typewriter.) Form Approved. OMB No. 2050-0039

UNIFORM HAZARDOUS WASTE MANIFEST

1. Generator ID Number: 123491
2. Page 1 of 1
3. Emergency Response Phone: (409) 985-4200
4. Manifest Tracking Number: **002162564 JJK**

5. Generator's Name and Mailing Address
PO Box 1421
Port Arthur, TX 77641
Generator's Phone: (409) 985-4200

Generator's Site Address (if different than mailing address)
2450 South Gulfway Drive
Port Arthur, TX 77641
(409) 985-4200

6. Transporter 1 Company Name: CES Environmental Services, Inc — U.S. EPA ID Number: TXD008950461

7. Transporter 2 Company Name — U.S. EPA ID Number:

8. Designated Facility Name and Site Address: ~~CES Environmental Services~~ ~~4904 Griggs Rd~~ ~~Houston TX 77021~~ ~~713-928-4480~~ Parkway Environmental Services LLC 2400 W. Hwy 90 Winnie TX 77665 409/724-3119
U.S. EPA ID Number: TXD008950461
Facility's Phone:

9a. HM	9b. U.S. DOT Description (including Proper Shipping Name, Hazard Class, ID Number, and Packing Group (if any))	10. Containers No.	Type	11. Total Quantity	12. Unit Wt./Vol.	13. Waste Codes		
X	1. Waste flammable liquids, n.o.s. (wastewater containing methanol), 3, UN1993, PG I	1	TT	41726	P	1001	151	
	2.							
	3.							
	4.							

14. Special Handling Instructions and Additional Information
Folder ID: Methanol w/w manifests
Newpark # CES Job # - 15933
11a) 040607066351H 11b) 11c) 6/25/08 5/29/08 11d) 6059gal

15. **GENERATOR'S/OFFEROR'S CERTIFICATION:** I hereby declare that the contents of this consignment are fully and accurately described above by the proper shipping name, and are classified, packaged, marked and labeled/placarded, and are in all respects in proper condition for transport according to applicable international and national governmental regulations. If export shipment and I am the Primary Exporter, I certify that the contents of this consignment conform to the terms of the attached EPA Acknowledgment of Consent.
I certify that the waste minimization statement identified in 40 CFR 262.27(a) (if I am a large quantity generator) or (b) (if I am a small quantity generator) is true.

GENERATOR

Generator's/Offeror's Printed/Typed Name: K Jamison — Signature: K Jamison — Month 6 Day 3 Year 09

INT'L

16. International Shipments ☐ Import to U.S. ☐ Export from U.S. Port of entry/exit:
Transporter signature (for exports only): Date leaving U.S.:

TRANSPORTER

17. Transporter Acknowledgment of Receipt of Materials
Transporter 1 Printed/Typed Name: LeRoy Brown — Signature: LeRoy Brown — Month 6 Day 3 Year 09
Transporter 2 Printed/Typed Name — Signature — Month Day Year

DESIGNATED FACILITY

18. Discrepancy
18a. Discrepancy Indication Space ☐ Quantity ☐ Type ☐ Residue ☐ Partial Rejection ☐ Full Rejection
Manifest Reference Number:
18b. Alternate Facility (or Generator) — U.S. EPA ID Number
Facility's Phone:
18c. Signature of Alternate Facility (or Generator) — Month Day Year

19. Hazardous Waste Report Management Method Codes (i.e., codes for hazardous waste treatment, disposal, and recycling systems)
1. H134 2. 3. 4.

20. Designated Facility Owner or Operator: Certification of receipt of hazardous materials covered by the manifest except as noted in Item 18a
Printed/Typed Name: Vicki Hessauer — Signature: Vicki H — Month 6 Day 3 Year 09

EPA Form 8700-22 (Rev. 3-05) Previous editions are obsolete. **TRANSPORTER'S COPY**

EPAPA010000156

CES Environmental Services, Inc.

4904 Griggs Road
Houston, TX 77021
Tel. (713) 676-1460
Fax. (713) 676-1676

Transportation Work Ticket

Folder ID : KMTEX (KMTEX - Port Arthur - TX) Methanol Wastewater

Date : 6/3/2009 **Manifest # :** 002162564 JJK

Client : KMTEX **Ticket :** 86940

Phone : 4099854200 **Consignee :** Newpark Environmental Services, LLC

Transporter : CES Environmental Services, Inc.

Signature **Signature**

Leave CES Yard :		**Arrive At Destination**	16:45
Arrive At Customer :	14:30	**Begin Unloading :**	
Begin Loading :	15:10	**Finish Unloading :**	
Finish Loading :	15:50	**Leave Destination :**	17:15
Leave Customer :		**Arrive At CES Yard :**	

Customer PO #:

Total Hours:

CES Unload: ☐

Gross Weight :	77,180	**Ending Odometer :**	115049
Tare Weight :	27,460	**Begining Odometer :**	114973
Net Weight :	49,720	**Total Miles :**	76

Driver : Brown, Leroy **Tractor # :** 285 **Tote # :**

Signature : **Trailer # :** ~~227~~ 267 **Box # :**

Job Comments/Equipment :

White (CES Office) Yellow (CES Office / Billing) Pink (CES Office / IFTA) Golden Rod (Customer)

DATE 6-3-09 NO. 52595

KMTEX
P.O. BOX 1421
2450 S. GULFWAY DRIVE
PORT ARTHUR, TEXAS 77640

ID 225

GROSS 27460 lb INBOUND

06/03/2009 02:36PM

ID 225

GROSS 77180 lb
TARE 27460 lb RECALLED
NET 49720 lb

06/03/2009 03:44PM

DRIVER ON ☐ OFF ☑

WEIGHED BY R Jamison

EPAPA010000158

Please print or type. (Form designed for use on elite (12-pitch) typewriter.) Form Approved. OMB No. 2050-0039

UNIFORM HAZARDOUS WASTE MANIFEST

1. Generator ID Number: TXR000079307
2. Page 1 of 1
3. Emergency Response Phone
4. Manifest Tracking Number: 005593188 JJK

5. Generator's Name and Mailing Address
CES Environmental Services - Port Arthur
4904 Griggs Road
Houston, TX 77021
State ID: 88585
Generator's Phone:

Generator's Site Address (if different than mailing address)
CES Environmental Services - Port Arthur
2420 Gulfway Drive
Port Arthur, TX 77640

6. Transporter 1 Company Name: CES Environmental Services, Inc. State ID 30900 — U.S. EPA ID Number: TXD008950461

7. Transporter 2 Company Name — U.S. EPA ID Number:

8. Designated Facility Name and Site Address
Newpark Environmental Services LLC
26400 Wiber Rd
Winnie TX, 77665
State ID 33030
Facility's Phone: (409) 724-3119
U.S. EPA ID Number: N/A

9a. HM	9b. U.S. DOT Description (including Proper Shipping Name, Hazard Class, ID Number, and Packing Group (if any))	10. Containers No.	10. Containers Type	11. Total Quantity	12. Unit Wt./Vol.	13. Waste Codes
	1. Non-RCRA/Non DOT Regulated Wastewater	1	TT	5000	G	D011 D031
	2.					
	3.					
	4.					

14. Special Handling Instructions and Additional Information
Profile ID: CES Environmental (CES - Port Arthur) PACES SAMPLE ID # _____ CES Job # 86960
Class 1, Non-Hazardous Wastewater
1) 092609118OBH D88585 6/30960 8/39698 4) 5204 gal

15. **GENERATOR'S/OFFEROR'S CERTIFICATION:** I hereby declare that the contents of this consignment are fully and accurately described above by the proper shipping name, and are classified, packaged, marked and labeled/placarded, and are in all respects in proper condition for transport according to applicable international and national governmental regulations. If export shipment and I am the Primary Exporter, I certify that the contents of this consignment conform to the terms of the attached EPA Acknowledgment of Consent.
I certify that the waste minimization statement identified in 40 CFR 262.27(a) (if I am a large quantity generator) or (b) (if I am a small quantity generator) is true.

Generator's/Offeror's Printed/Typed Name: Michael Ray — Signature: — Month 6 Day 3 Year 09

16. International Shipments ☐ Import to U.S. ☐ Export from U.S. Port of entry/exit:
Transporter signature (for exports only): Date leaving U.S.:

17. Transporter Acknowledgment of Receipt of Materials
Transporter 1 Printed/Typed Name: Chris Saylor — Signature: Chris Saylor — Month 6 Day 3 Year 09
Transporter 2 Printed/Typed Name — Signature — Month Day Year

18. Discrepancy
18a. Discrepancy Indication Space ☐ Quantity ☐ Type ☐ Residue ☐ Partial Rejection ☐ Full Rejection
Manifest Reference Number:
18b. Alternate Facility (or Generator) — U.S. EPA ID Number
Facility's Phone:
18c. Signature of Alternate Facility (or Generator) — Month Day Year

19. Hazardous Waste Report Management Method Codes (i.e., codes for hazardous waste treatment, disposal, and recycling systems)
1. H134 2. 3. 4.

20. Designated Facility Owner or Operator: Certification of receipt of hazardous materials covered by the manifest except as noted in Item 18a
Printed/Typed Name: Vick Hoffmann — Signature: — Month 6 Day 3 Year 09

GENERATOR — INT'L — TRANSPORTER — DESIGNATED FACILITY

EPA Form 8700-22 (Rev. 3-05) Previous editions are obsolete. **TRANSPORTER'S COPY**

EPAPA010000159

CES Environmental Services, Inc.

4904 Griggs Road
Houston, TX 77021
Tel. (713) 676-1460
Fax. (713) 676-1676

Transportation Work Ticket

Folder ID : CES Enviornmental (CES - Port Arthur) Class 1, Non-hazardous Wastewater

Date : 6/3/2009 **Manifest # :**

Client : CES Environmental Services - Port Arthur **Ticket :** 86960

Phone : **Consignee :** Newpark Environmental Services, LLC

Transporter : CES Environmental Services, Inc.

Signature **Signature**

Leave CES Yard :	215pm.	**Arrive At Destination**	300pm.
Arrive At Customer :		**Begin Unloading :**	
Begin Loading :		**Finish Unloading :**	
Finish Loading :		**Leave Destination :**	
Leave Customer :		**Arrive At CES Yard :**	

Customer PO #:

Total Hours:

CES Unload: ☐

Gross Weight :		**Ending Odometer :**	28159
Tare Weight :		**Begining Odometer :**	28081
Net Weight :		**Total Miles :**	78

Driver : Sawyer, Chris **Tractor # :** 2006 **Tote # :**

Signature : **Trailer # :** 262 **Box # :**

Job Comments/Equipment :

White (CES Office) Yellow (CES Office / Billing) Pink (CES Office / IFTA) Golden Rod (Customer)

METTLER TOLEDO

AUTHORIZED SIGNATURE

Newpark Env. Services LC CN 58544
26400 WILBER RD
WINNE TX 77665

ID	2	GROSS	76980 lb (1)
VEHICLE	331	TARE	30140 lb
TIME	4:02 PM	NET	46840 lb
DATE	06 03 09		

EPAPA010000161

Please print or type. (Form designed for use on elite (12-pitch) typewriter.) Form Approved. OMB No. 2050-0039

UNIFORM HAZARDOUS WASTE MANIFEST

1. Generator ID Number: TXR000079307
2. Page 1 of 1
3. Emergency Response Phone
4. Manifest Tracking Number: 005593195 JJK

5. Generator's Name and Mailing Address
CES Environmental Services - Port Arthur
4904 Griggs Road
Houston, TX 77021
State ID: 89580
Generator's Phone:

Generator's Site Address (if different than mailing address)
CES Environmental Services - Port Arthur
2420 Gulfway Drive
Port Arthur, TX 77640

6. Transporter 1 Company Name: CES Environmental Services, Inc. State ID 30300
U.S. EPA ID Number: TXD008950461

7. Transporter 2 Company Name
U.S. EPA ID Number

8. Designated Facility Name and Site Address
Newpark Environmental Services, LLC
25400 Wilber Rd
Winnie TX, 77665
State ID 39038
Facility's Phone: (409) 794-3119
U.S. EPA ID Number: N/A

9a. HM	9b. U.S. DOT Description (including Proper Shipping Name, Hazard Class, ID Number, and Packing Group (if any))	10. Containers No.	10. Containers Type	11. Total Quantity	12. Unit Wt./Vol.	13. Waste Codes
	1. Non-RCRA/Non DOT regulated wastewater	1	TT	5000	G	D001 D01
	2. 2:30pm					
	3.					
	4.					1:25pm 1:30pm

14. Special Handling Instructions and Additional Information
Folder ID : CES Environmental (CES - Port Arthur)
Class 1, Non-Hazardous Wastewater
PACES SAMPLE ID # _____ CES Job # - 87525 5:30pm
1) 09200911808H 2) 1138185 6130900 8291098 6334gal

15. **GENERATOR'S/OFFEROR'S CERTIFICATION:** I hereby declare that the contents of this consignment are fully and accurately described above by the proper shipping name, and are classified, packaged, marked and labeled/placarded, and are in all respects in proper condition for transport according to applicable international and national governmental regulations. If export shipment and I am the Primary Exporter, I certify that the contents of this consignment conform to the terms of the attached EPA Acknowledgment of Consent.
I certify that the waste minimization statement identified in 40 CFR 262.27(a) (if I am a large quantity generator) or (b) (if I am a small quantity generator) is true.

Generator's/Offeror's Printed/Typed Name: Lo Chamberlain
Signature
Month 11 Day 5 Year 09

16. International Shipments ☐ Import to U.S. ☐ Export from U.S. Port of entry/exit:
Transporter signature (for exports only): Date leaving U.S.:

17. Transporter Acknowledgment of Receipt of Materials
Transporter 1 Printed/Typed Name: Scott Fini
Signature
Month 6 Day 12 Year 09
Transporter 2 Printed/Typed Name
Signature
Month Day Year

18. Discrepancy
18a. Discrepancy Indication Space ☐ Quantity ☐ Type ☐ Residue ☐ Partial Rejection ☐ Full Rejection
Manifest Reference Number:

18b. Alternate Facility (or Generator)
U.S. EPA ID Number
Facility's Phone:

18c. Signature of Alternate Facility (or Generator)
Month Day Year

19. Hazardous Waste Report Management Method Codes (i.e., codes for hazardous waste treatment, disposal, and recycling systems)
1. H134 2. 3. 4.

20. Designated Facility Owner or Operator: Certification of receipt of hazardous materials covered by the manifest except as noted in Item 18a
Printed/Typed Name: Vicki Hohmann
Signature
Month 6 Day 11 Year 09

EPA Form 8700-22 (Rev. 3-05) Previous editions are obsolete. **TRANSPORTER'S COPY**

EPAPA010000162

CES Environmental Services, Inc.

4904 Griggs Road
Houston, TX 77021
Tel. (713) 676-1460
Fax. (713) 676-1676

Transportation Work Ticket

Folder ID : CES Enviornmental (CES - Port Arthur) Class 1, Non-hazardous Wastewater

Date : 6/11/2009 **Manifest # :**

Client : CES Environmental Services - Port Arthur **Ticket :** 87567

Phone : **Consignee :** Newpark Environmental Services, LLC

Transporter : CES Environmental Services, Inc.

Signature **Signature**

Leave CES Yard :	2:30pm	**Arrive At Destination**	3:30pm
Arrive At Customer :		**Begin Unloading :**	4:00pm
Begin Loading :		**Finish Unloading :**	4:25pm
Finish Loading :		**Leave Destination :**	4:30pm
Leave Customer :		**Arrive At CES Yard :**	5:30pm

Customer PO #:

Total Hours:

CES Unload: ☒

Gross Weight :		**Ending Odometer :**	115554
Tare Weight :		**Begining Odometer :**	
Net Weight :		**Total Miles :**	

Driver : Frias, Juan **Tractor # :** 2003 **Tote # :**

Signature : **Trailer # :** 262 **Box # :**

Job Comments/Equipment :

White (CES Office) Yellow (CES Office / Billing) Pink (CES Office / IFTA) Golden Rod (Customer)

METTLER TOLEDO

AUTHORIZED SIGNATURE

Newpark Env. Services LC CN 58725
26400 WILBER RD
WINNE TX 77665

ID	1	GROSS	86160 lb (1)
VEHICLE	1124	TARE	30420 lb
TIME	4:35 PM	NET	55740 lb
DATE	06 11 09		

EPAPA010000164

Please print or type. (Form designed for use on elite (12-pitch) typewriter.)

Form Approved. OMB No. 2050-0039

UNIFORM HAZARDOUS WASTE MANIFEST

1. Generator ID Number
2. Page 1 of
3. Emergency Response Phone
4. Manifest Tracking Number: 005593203 JJK

GENERATOR

5. Generator's Name and Mailing Address: TXR000029307
CES Environmental Services - Port Arthur
Generator's Phone:
State ID:
Generator's Site Address (if different than mailing address): CES Environmental Services - Port Arthur, 2400 Gulfway Drive, Port Arthur, TX 77640

6. Transporter 1 Company Name
U.S. EPA ID Number

7. Transporter 2 Company Name: CES Environmental Services, Inc.
State ID: 30900
U.S. EPA ID Number: TXD008950461

8. Designated Facility Name and Site Address: Newark Environmental Services, LLC, 7800 Miller Rd, Waco, TX 7706
Facility's Phone: (817) 794-3119
State ID: 30058
U.S. EPA ID Number: VOU

9a. HM	9b. U.S. DOT Description (including Proper Shipping Name, Hazard Class, ID Number, and Packing Group (if any))	10. Containers No.	10. Containers Type	11. Total Quantity	12. Unit Wt./Vol.	13. Waste Codes
	1. Non-RCRA/Non DOT regulated wastewater	1	TT	5000	G	D011 31
	2.					
	3.					
	4.					

14. Special Handling Instructions and Additional Information
Profile ID: CES Environmental (CES - Port Arthur)
Class 1, Non-hazardous Wastewater
Dates Shipped: 6/30/09 - 8/29/09
CES Job # - 87561
57 Legal

15. **GENERATOR'S/OFFEROR'S CERTIFICATION:** I hereby declare that the contents of this consignment are fully and accurately described above by the proper shipping name, and are classified, packaged, marked and labeled/placarded, and are in all respects in proper condition for transport according to applicable international and national governmental regulations. If export shipment and I am the Primary Exporter, I certify that the contents of this consignment conform to the terms of the attached EPA Acknowledgment of Consent.
I certify that the waste minimization statement identified in 40 CFR 262.27(a) (if I am a large quantity generator) or (b) (if I am a small quantity generator) is true.

Generator's/Offeror's Printed/Typed Name: Bo Cumberland
Signature: Bo Cumberland
Month 6 Day 17 Year 09

INT'L

16. International Shipments ☐ Import to U.S. ☐ Export from U.S. Port of entry/exit:
Transporter signature (for exports only): Date leaving U.S.:

TRANSPORTER

17. Transporter Acknowledgment of Receipt of Materials
Transporter 1 Printed/Typed Name | Signature | Month | Day | Year
Transporter 2 Printed/Typed Name | Signature | Month | Day | Year

DESIGNATED FACILITY

18. Discrepancy
18a. Discrepancy Indication Space ☐ Quantity ☐ Type ☐ Residue ☐ Partial Rejection ☐ Full Rejection
Manifest Reference Number:

18b. Alternate Facility (or Generator)
U.S. EPA ID Number
Facility's Phone:

18c. Signature of Alternate Facility (or Generator) | Month | Day | Year

19. Hazardous Waste Report Management Method Codes (i.e., codes for hazardous waste treatment, disposal, and recycling systems)

1.	2.	3.	4.
H134			

20. Designated Facility Owner or Operator: Certification of receipt of hazardous materials covered by the manifest except as noted in Item 18a
Printed/Typed Name: Vick Hollaway
Signature
Month 6 Day 17 Year 09

EPA Form 8700-22 (Rev. 3-05) Previous editions are obsolete.

GENERATOR'S INITIAL COPY

EPAPA010000165

Please print or type. (Form designed for use on elite (12-pitch) typewriter.) Form Approved. OMB No. 2050-0039

UNIFORM HAZARDOUS WASTE MANIFEST

1. Generator ID Number
2. Page 1 of
3. Emergency Response Phone
4. Manifest Tracking Number: 005593203 JJK

GENERATOR

5. Generator's Name and Mailing Address: TXR000079307
CES Environmental Services - Port Arthur State ID: 30585
Generator's Phone:
Generator's Site Address (if different than mailing address): CES Environmental Services - Port Arthur, 2620 Gulfway Drive, Port Arthur, TX 77640

6. Transporter 1 Company Name: U.S. EPA ID Number:

7. Transporter 2 Company Name: CES Environmental Services, Inc. State ID 30900 U.S. EPA ID Number: TXD008950461

8. Designated Facility Name and Site Address: Newpark Environmental Services, LLC, 2500 Sims Rd, Wharton, TX 77488 State ID 30098 U.S. EPA ID Number: 400
Facility's Phone: 979-532-1119

9a. HM	9b. U.S. DOT Description (including Proper Shipping Name, Hazard Class, ID Number, and Packing Group (if any))	10. Containers No.	10. Containers Type	11. Total Quantity	12. Unit Wt./Vol.	13. Waste Codes
	1. Non-RCRA/Non-DOT regulated wastewater	1	TT	5000	G	D001
	2.					
	3.					
	4.					

14. Special Handling Instructions and Additional Information
Folder ID : CES Environmental (CES - Port Arthur) 1 SES 6/30/09 5/29/09 CES Job # - 87661 576 legal
Class 1 Non-hazardous Wastewater

15. **GENERATOR'S/OFFEROR'S CERTIFICATION:** I hereby declare that the contents of this consignment are fully and accurately described above by the proper shipping name, and are classified, packaged, marked and labeled/placarded, and are in all respects in proper condition for transport according to applicable international and national governmental regulations. If export shipment and I am the Primary Exporter, I certify that the contents of this consignment conform to the terms of the attached EPA Acknowledgment of Consent.
I certify that the waste minimization statement identified in 40 CFR 262.27(a) (if I am a large quantity generator) or (b) (if I am a small quantity generator) is true.

Generator's/Offeror's Printed/Typed Name: Bo Cumberland Signature: Bo Cumberland Month 6 Day 17 Year 09

INT'L

16. International Shipments ☐ Import to U.S. ☐ Export from U.S. Port of entry/exit:
Transporter signature (for exports only): Date leaving U.S.:

TRANSPORTER

17. Transporter Acknowledgment of Receipt of Materials
Transporter 1 Printed/Typed Name Signature Month Day Year
Transporter 2 Printed/Typed Name Signature Month Day Year

DESIGNATED FACILITY

18. Discrepancy
18a. Discrepancy Indication Space ☐ Quantity ☐ Type ☐ Residue ☐ Partial Rejection ☐ Full Rejection
Manifest Reference Number:
18b. Alternate Facility (or Generator) U.S. EPA ID Number
Facility's Phone:
18c. Signature of Alternate Facility (or Generator) Month Day Year

19. Hazardous Waste Report Management Method Codes (i.e., codes for hazardous waste treatment, disposal, and recycling systems)
1. H134 2. 3. 4.

20. Designated Facility Owner or Operator: Certification of receipt of hazardous materials covered by the manifest except as noted in Item 18a
Printed/Typed Name: Vicki Hoffauer Signature: Vicki Hoffauer Month 6 Day 17 Year 09

EPA Form 8700-22 (Rev. 3-05) Previous editions are obsolete. **TRANSPORTER'S COPY**

EPAPA010000166

CES Environmental Services, Inc.

4904 Griggs Road
Houston, TX 77021
Tel. (713) 676-1460
Fax. (713) 676-1676

Transportation Work Ticket

Folder ID : CES Enviornmental (CES - Port Arthur) Class 1, Non-hazardous Wastewater

Date : 6/17/2009 **Manifest # :**

Client : CES Environmental Services - Port Arthur **Ticket :** 87861

Phone : **Consignee :** Newpark Environmental Services, LLC

Transporter : CES Environmental Services, Inc.

Signature **Signature**

Leave CES Yard :	11:30 AM	**Arrive At Destination**	
Arrive At Customer :	12:20 pm	**Begin Unloading :**	
Begin Loading :	12:35 pm	**Finish Unloading :**	
Finish Loading :	1:00 pm	**Leave Destination :**	
Leave Customer :	1:15 pm	**Arrive At CES Yard :**	1:45 pm

Customer PO #:

Total Hours:

CES Unload: ☐

Gross Weight :		**Ending Odometer :**	
Tare Weight :		**Begining Odometer :**	
Net Weight :		**Total Miles :**	

Driver : Gipson, Jack **Tractor # :** 278 **Tote # :**

Signature : Jack Gipson **Trailer # :** 419 **Box # :**

Job Comments/Equipment : One load of waste water to New Park.

White (CES Office) Yellow (CES Office / Billing) Pink (CES Office / IFTA) Golden Rod (Customer)

METTLER TOLEDO

AUTHORIZED SIGNATURE

Newpark Env. Services LC CN 58855
26400 WILBER RD
WINNE TX 77665

ID	3	GROSS	83960 lb (1)
VEHICLE	1733	TARE	32640 lb
TIME	5:02 PM	NET	51320 lb
DATE	06 17 09		

EPAPA010000168

Please print or type. (Form designed for use on elite (12-pitch) typewriter.)

Form Approved. OMB No. 2050-0039

UNIFORM HAZARDOUS WASTE MANIFEST

1. Generator ID Number: TXR000079307
2. Page 1 of 1
3. Emergency Response Phone
4. Manifest Tracking Number: 005593202 JJK

5. Generator's Name and Mailing Address
CES Environmental Services - Port Arthur
4904 Griggs Road
Houston, TX 77021
State ID: 86555
Generator's Phone:

Generator's Site Address (if different than mailing address)
CES Environmental Services - Port Arthur
2420 Gulfway Drive
Port Arthur, TX 77640

6. Transporter 1 Company Name
CES Environmental Services, Inc.
State ID 30900
U.S. EPA ID Number: TXD000250461

7. Transporter 2 Company Name
U.S. EPA ID Number

8. Designated Facility Name and Site Address
Newpark Environmental Services, LLC
25400 Wilber Rd
Winnie TX, 77665
State ID 35030
Facility's Phone: (409) 724-3119
U.S. EPA ID Number: N/A

9a. HM	9b. U.S. DOT Description (including Proper Shipping Name, Hazard Class, ID Number, and Packing Group (if any))	10. Containers No.	10. Containers Type	11. Total Quantity	12. Unit Wt./Vol.	13. Waste Codes
	1. Non-RCRA/Non DOT regulated wastewater	1	TT	5000	G	
	2.					
	3.					
	4.					

14. Special Handling Instructions and Additional Information
Folder ID : CES Environmental (CES - Port Arthur)
Class 1, Non-hazardous Wastewater
PACES SAMPLE ID # 0/1/10
CES Job # - 87852
1) 00260911BGEH 2) 1/30/10 6/30/10 8/31/08 3) 5500 gal

15. **GENERATOR'S/OFFEROR'S CERTIFICATION:** I hereby declare that the contents of this consignment are fully and accurately described above by the proper shipping name, and are classified, packaged, marked and labeled/placarded, and are in all respects in proper condition for transport according to applicable international and national governmental regulations. If export shipment and I am the Primary Exporter, I certify that the contents of this consignment conform to the terms of the attached EPA Acknowledgment of Consent.
I certify that the waste minimization statement identified in 40 CFR 262.27(a) (if I am a large quantity generator) or (b) (if I am a small quantity generator) is true.

Generator's/Offeror's Printed/Typed Name: BO CUMBERLAND
Signature:
Month 6 Day 17 Year 09

16. International Shipments ☐ Import to U.S. ☐ Export from U.S. Port of entry/exit:
Transporter signature (for exports only): Date leaving U.S.:

17. Transporter Acknowledgment of Receipt of Materials
Transporter 1 Printed/Typed Name: MIKE BATTON
Signature:
Month 6 Day 17 Year 09
Transporter 2 Printed/Typed Name
Signature
Month Day Year

18. Discrepancy
18a. Discrepancy Indication Space ☐ Quantity ☐ Type ☐ Residue ☐ Partial Rejection ☐ Full Rejection
Manifest Reference Number:

18b. Alternate Facility (or Generator) U.S. EPA ID Number
Facility's Phone:

18c. Signature of Alternate Facility (or Generator) Month Day Year

19. Hazardous Waste Report Management Method Codes (i.e., codes for hazardous waste treatment, disposal, and recycling systems)
1. H134 2. 3. 4.

20. Designated Facility Owner or Operator: Certification of receipt of hazardous materials covered by the manifest except as noted in Item 18a
Printed/Typed Name: Vick Hoffman
Signature:
Month 6 Day 17 Year 09

GENERATOR — INT'L — TRANSPORTER — DESIGNATED FACILITY

EPA Form 8700-22 (Rev. 3-05) Previous editions are obsolete.

TRANSPORTER'S COPY

EPAPA010000169

Please print or type. (Form designed for use on elite (12-pitch) typewriter.)

Form Approved. OMB No. 2050-0039

UNIFORM HAZARDOUS WASTE MANIFEST

1. Generator ID Number: TXR000079307
2. Page 1 of 1
3. Emergency Response Phone:
4. Manifest Tracking Number: 005593202 JJK

GENERATOR

5. Generator's Name and Mailing Address
CES Environmental Services - Port Arthur
State ID: [illegible]
4804 Griggs Road
Houston, TX 77021
Generator's Phone:

Generator's Site Address (if different than mailing address)
CES Environmental Services - Port Arthur
2420 Gulfway Drive
Port Arthur, TX 77640

6. Transporter 1 Company Name
CES Environmental Services, Inc.
State ID: 30900
U.S. EPA ID Number: TXD000809046

7. Transporter 2 Company Name
U.S. EPA ID Number:

8. Designated Facility Name and Site Address
Meanark Environmental Services, LLC
20400 Wilber Rd
Winnie TX, 77665
Facility's Phone: (409) 724-3110
State ID: 39098
U.S. EPA ID Number: N/A

9a. HM	9b. U.S. DOT Description (including Proper Shipping Name, Hazard Class, ID Number, and Packing Group (if any))	10. Containers No.	10. Containers Type	11. Total Quantity	12. Unit Wt./Vol.	13. Waste Codes
	1. Non-RCRA/Non DOT regulated wastewater	1	TT	5000	G	D001
	2.					
	3.					
	4.					

14. Special Handling Instructions and Additional Information
Folder ID: CES Environmental (CES - Port Arthur)
PACES SAMPLE ID #: [illegible]
CES Job # - 67652
Class 1, Non-hazardous Wastewater
1) 0000011300H 2) 130900 6/30/00 8/31/08 4) 5500 gal

15. **GENERATOR'S/OFFEROR'S CERTIFICATION:** I hereby declare that the contents of this consignment are fully and accurately described above by the proper shipping name, and are classified, packaged, marked and labeled/placarded, and are in all respects in proper condition for transport according to applicable international and national governmental regulations. If export shipment and I am the Primary Exporter, I certify that the contents of this consignment conform to the terms of the attached EPA Acknowledgment of Consent.
I certify that the waste minimization statement identified in 40 CFR 262.27(a) (if I am a large quantity generator) or (b) (if I am a small quantity generator) is true.

Generator's/Offeror's Printed/Typed Name: LO Lumbarac
Signature:
Month 6 Day 1 Year 09

INT'L

16. International Shipments ☐ Import to U.S. ☐ Export from U.S. Port of entry/exit:
Transporter signature (for exports only): Date leaving U.S.:

TRANSPORTER

17. Transporter Acknowledgment of Receipt of Materials
Transporter 1 Printed/Typed Name: Signature: Month Day Year
Transporter 2 Printed/Typed Name: Signature: Month Day Year

DESIGNATED FACILITY

18. Discrepancy
18a. Discrepancy Indication Space ☐ Quantity ☐ Type ☐ Residue ☐ Partial Rejection ☐ Full Rejection
Manifest Reference Number:

18b. Alternate Facility (or Generator) U.S. EPA ID Number
Facility's Phone:

18c. Signature of Alternate Facility (or Generator) Month Day Year

19. Hazardous Waste Report Management Method Codes (i.e., codes for hazardous waste treatment, disposal, and recycling systems)
1. H134 2. 3. 4.

20. Designated Facility Owner or Operator: Certification of receipt of hazardous materials covered by the manifest except as noted in Item 18a
Printed/Typed Name: Vicki Hauer
Signature:
Month 6 Day 17 Year 09

EPA Form 8700-22 (Rev. 3-05) Previous editions are obsolete.

GENERATOR'S INITIAL COPY

EPAPA010000170

CES Environmental Services, Inc.

4904 Griggs Road
Houston, TX 77021
Tel. (713) 676-1460
Fax. (713) 676-1676

Transportation Work Ticket

Folder ID : CES Enviornmental (CES - Port Arthur)
Class 1, Non-hazardous Wastewater

Date : 6/17/2009 **Manifest # :**

Client : CES Environmental Services - Port Arthur **Ticket :** ~~87861~~ 87652

Phone : **Consignee :** Newpark Environmental Services, LLC

Transporter : CES Environmental Services, Inc.

Signature BO Cumberland **Signature**

Leave CES Yard :	3:10pm	**Arrive At Destination**	
Arrive At Customer :	3:55 pm	**Begin Unloading :**	
Begin Loading :	4:20pm	**Finish Unloading :**	
Finish Loading :		**Leave Destination :**	
Leave Customer :	4:50	**Arrive At CES Yard :**	6:30

Customer PO #:

Total Hours:

CES Unload: ☐

Gross Weight :		**Ending Odometer :**	
Tare Weight :		**Begining Odometer :**	
Net Weight :		**Total Miles :**	

Driver : Gipson, Jack **Tractor # :** 299 **Tote # :**

Signature : Jack Gipson **Trailer # :** 419 **Box # :**

Job Comments/Equipment : One load of waste water to NewPark and off load

White (CES Office) Yellow (CES Office / Billing) Pink (CES Office / IFTA) Golden Rod (Customer)

METTLER TOLEDO

AUTHORIZED SIGNATURE

Newpark Env. Services LC CN 58839
26400 WILBER RD
WINNE TX 77665

ID	5	GROSS	82260 lb (1)
VEHICLE	1718	TARE	32760 lb
TIME	2:00 PM	NET	49500 lb
DATE	06 17 09		

EPAPA010000172

Please print or type. (Form designed for use on elite (12-pitch) typewriter.) Form Approved. OMB No. 2050-0039

UNIFORM HAZARDOUS WASTE MANIFEST

1. Generator ID Number: TXR000079307
2. Page 1 of 1
3. Emergency Response Phone:
4. Manifest Tracking Number: 005593196 JJK

5. Generator's Name and Mailing Address
CES Environmental Services - Port Arthur
4904 Griggs Road
Houston, TX 77021
State ID: 86585
Generator's Phone:

Generator's Site Address (if different than mailing address)
CES Environmental Services - Port Arthur
2420 Gulfway Drive
Port Arthur, TX 77640

6. Transporter 1 Company Name: CES Environmental Services, Inc. State ID 30900 U.S. EPA ID Number: TXD008950461

7. Transporter 2 Company Name U.S. EPA ID Number

8. Designated Facility Name and Site Address
Newpark Environmental Services, LLC
26400 Wilber Rd
Winnie TX, 77665
State ID 39098
Facility's Phone: (409) 794-3119
U.S. EPA ID Number: N/A

9a. HM	9b. U.S. DOT Description (including Proper Shipping Name, Hazard Class, ID Number, and Packing Group (if any))	10. Containers No.	10. Containers Type	11. Total Quantity	12. Unit Wt./Vol.	13. Waste Codes
	1. Non-RCRA/Non DOT regulated wastewater	1	TT	5000	G	00011131
	2.	005593196				
	3.					
	4.					

14. Special Handling Instructions and Additional Information
Folder ID : CES Environmental (CES - Port Arthur) 900
Class 1, Non-hazardous Wastewater
PACES SAMPLE ID # _____ - _____ CES Job # - 87611
1) 0926091180BH 2) 3) 4)

15. **GENERATOR'S/OFFEROR'S CERTIFICATION:** I hereby declare that the contents of this consignment are fully and accurately described above by the proper shipping name, and are classified, packaged, marked and labeled/placarded, and are in all respects in proper condition for transport according to applicable international and national governmental regulations. If export shipment and I am the Primary Exporter, I certify that the contents of this consignment conform to the terms of the attached EPA Acknowledgment of Consent.
I certify that the waste minimization statement identified in 40 CFR 262.27(a) (if I am a large quantity generator) or (b) (if I am a small quantity generator) is true.

Generator's/Offeror's Printed/Typed Name: Bo Cumberland Signature: Bo Month 6 Day 12 Year 09

16. International Shipments ☐ Import to U.S. ☐ Export from U.S. Port of entry/exit:
Transporter signature (for exports only): Date leaving U.S.:

17. Transporter Acknowledgment of Receipt of Materials
Transporter 1 Printed/Typed Name: LeRoy Brown Signature: LeRoy Brown Month 6 Day 12 Year 09
Transporter 2 Printed/Typed Name Signature Month Day Year

18. Discrepancy
18a. Discrepancy Indication Space ☐ Quantity ☐ Type ☐ Residue ☐ Partial Rejection ☑ Full Rejection
Manifest Reference Number:

18b. Alternate Facility (or Generator) CES ENVIRONMENTAL SERVICE 4904 GRIGGS RD. HOUSTON, TX 77021 U.S. EPA ID Number: TXD008950461
Facility's Phone:

18c. Signature of Alternate Facility (or Generator) Month Day Year

19. Hazardous Waste Report Management Method Codes (i.e., codes for hazardous waste treatment, disposal, and recycling systems)
1. H134 2. 3. 4.

20. Designated Facility Owner or Operator: Certification of receipt of hazardous materials covered by the manifest except as noted in Item 18a
Printed/Typed Name: BRIEN WATSON Signature: Brien Watson Month 06 Day 12 Year 09

GENERATOR | INT'L | TRANSPORTER | DESIGNATED FACILITY

EPA Form 8700-22 (Rev. 3-05) Previous editions are obsolete. **DESIGNATED FACILITY TO GENERATOR**

EPAPA010000173

Please print or type. (Form designed for use on elite (12-pitch) typewriter.) Form Approved. OMB No. 2050-0039

UNIFORM HAZARDOUS WASTE MANIFEST

1. Generator ID Number: TXR000079307
2. Page 1 of 1
3. Emergency Response Phone:
4. Manifest Tracking Number: **005593196 JJK**

5. Generator's Name and Mailing Address
CES Environmental Services - Port Arthur
4904 Griggs Road
Houston, TX 77021
State ID: 30585
Generator's Site Address (if different than mailing address)
CES Environmental Services - Port Arthur
2420 Gulfway Drive
Port Arthur, TX 77640
Generator's Phone:

6. Transporter 1 Company Name: CES Environmental Services, Inc. State ID 30500 U.S. EPA ID Number: TXD008950461

7. Transporter 2 Company Name U.S. EPA ID Number

8. Designated Facility Name and Site Address
Newpark Environmental Services, LLC
25400 Wilber Rd
Winnie TX, 77665
State ID 33098
U.S. EPA ID Number: N/A
Facility's Phone: (409) 794-3119

9a. HM	9b. U.S. DOT Description (including Proper Shipping Name, Hazard Class, ID Number, and Packing Group (if any))	10. Containers No.	10. Containers Type	11. Total Quantity	12. Unit Wt./Vol.	13. Waste Codes
	1. Non-RCRA/Non DOT regulated wastewater	1	TT	5000	G	D001 131
	2.					
	3.					
	4.					

14. Special Handling Instructions and Additional Information
Folder ID: CES Environmental (CES - Port Arthur) PACES SAMPLE ID # CES Job # - 87611
Class 1, Non-hazardous Wastewater
1) 092609110SH 2) 3) 4)

15. **GENERATOR'S/OFFEROR'S CERTIFICATION:** I hereby declare that the contents of this consignment are fully and accurately described above by the proper shipping name, and are classified, packaged, marked and labeled/placarded, and are in all respects in proper condition for transport according to applicable international and national governmental regulations. If export shipment and I am the Primary Exporter, I certify that the contents of this consignment conform to the terms of the attached EPA Acknowledgment of Consent.
I certify that the waste minimization statement identified in 40 CFR 262.27(a) (if I am a large quantity generator) or (b) (if I am a small quantity generator) is true.

Generator's/Offeror's Printed/Typed Name: Bo Lambert Signature: Month 6 Day 12 Year 09

16. International Shipments ☐ Import to U.S. ☐ Export from U.S. Port of entry/exit:
Transporter signature (for exports only): Date leaving U.S.:

17. Transporter Acknowledgment of Receipt of Materials
Transporter 1 Printed/Typed Name: LeRoy Brown Signature: Month 6 Day 12 Year 09
Transporter 2 Printed/Typed Name Signature Month Day Year

18. Discrepancy
18a. Discrepancy Indication Space ☐ Quantity ☐ Type ☐ Residue ☐ Partial Rejection ☑ Full Rejection
Manifest Reference Number:
18b. Alternate Facility (or Generator) CES ENVIRONMENTAL SERVICE 4904 GRIGGS RD. HOUSTON, TX 77021 U.S. EPA ID Number: TXD008950461
Facility's Phone:
18c. Signature of Alternate Facility (or Generator) Month Day Year

19. Hazardous Waste Report Management Method Codes (i.e., codes for hazardous waste treatment, disposal, and recycling systems)
1. M134 2. 3. 4.

20. Designated Facility Owner or Operator: Certification of receipt of hazardous materials covered by the manifest except as noted in Item 18a.
Printed/Typed Name: BRIEN WATSON Signature: Month 06 Day 12 Year 09

GENERATOR | INT'L | TRANSPORTER | DESIGNATED FACILITY

EPA Form 8700-22 (Rev. 3-05) Previous editions are obsolete. **TRANSPORTER'S COPY**

EPAPA010000174

Please print or type. (Form designed for use on elite (12-pitch) typewriter.)

Form Approved. OMB No. 2050-0039

UNIFORM HAZARDOUS WASTE MANIFEST

1. Generator ID Number	2. Page 1 of	3. Emergency Response Phone	4. Manifest Tracking Number
TXR000079307	1		005593196 JJK

GENERATOR

5. Generator's Name and Mailing Address
CES Environmental Services - Port Arthur State ID: 85555
9804 Griggs Road
Houston, TX 77021
Generator's Phone:

Generator's Site Address (if different than mailing address)
CES Environmental Services - Port Arthur
2400 Gulfway Drive
Port Arthur, TX 77640

6. Transporter 1 Company Name
CES Environmental Services, Inc. State ID: 30300
U.S. EPA ID Number: TXD008950461

7. Transporter 2 Company Name
U.S. EPA ID Number:

8. Designated Facility Name and Site Address
Newark Environmental Services LLC State ID: 33078
20000 Wilker Rd
Winnie TX, 77665
Facility's Phone: (409) 734-3119
U.S. EPA ID Number: N/A

9a. HM	9b. U.S. DOT Description (including Proper Shipping Name, Hazard Class, ID Number, and Packing Group (if any))	10. Containers No.	10. Containers Type	11. Total Quantity	12. Unit Wt./Vol.	13. Waste Codes
	1. Non-RCRA/Non DOT regulated wastewater	1	TT	5000	G	D001 D34
	2.					
	3.					
	4.					

14. Special Handling Instructions and Additional Information
Profile ID: CES Environmental (CES - Port Arthur) PACES Sample ID #: CES Job # - 87611
Class 1, Non-hazardous Wastewater
1) 0906091308H 2) 3) 4)

15. **GENERATOR'S/OFFEROR'S CERTIFICATION:** I hereby declare that the contents of this consignment are fully and accurately described above by the proper shipping name, and are classified, packaged, marked and labeled/placarded, and are in all respects in proper condition for transport according to applicable international and national governmental regulations. If export shipment and I am the Primary Exporter, I certify that the contents of this consignment conform to the terms of the attached EPA Acknowledgment of Consent.
I certify that the waste minimization statement identified in 40 CFR 262.27(a) (if I am a large quantity generator) or (b) (if I am a small quantity generator) is true.

Generator's/Offeror's Printed/Typed Name: Lo Lumbom Q. Signature: Lo Q. Month 6 Day 12 Year 09

INT'L

16. International Shipments ☐ Import to U.S. ☐ Export from U.S. Port of entry/exit:
Transporter signature (for exports only): Date leaving U.S.:

TRANSPORTER

17. Transporter Acknowledgment of Receipt of Materials

Transporter 1 Printed/Typed Name: Le Roy Brown Signature: Month 6 Day 12 Year 09

Transporter 2 Printed/Typed Name: Signature: Month Day Year

DESIGNATED FACILITY

18. Discrepancy

18a. Discrepancy Indication Space ☐ Quantity ☐ Type ☐ Residue ☐ Partial Rejection ☒ Full Rejection

Manifest Reference Number:

18b. Alternate Facility (or Generator) CES ENVIRONMENTAL SERVICE 4906 GRIGGS RD. HOUSTON, TX 77021
U.S. EPA ID Number: TXD008950461
Facility's Phone:

18c. Signature of Alternate Facility (or Generator) Month Day Year

19. Hazardous Waste Report Management Method Codes (i.e., codes for hazardous waste treatment, disposal, and recycling systems)

1.	2.	3.	4.
H134			

20. Designated Facility Owner or Operator: Certification of receipt of hazardous materials covered by the manifest except as noted in Item 18a

Printed/Typed Name: BRIEN WATSON Signature: Month 06 Day 12 Year 09

EPA Form 8700-22 (Rev. 3-05) Previous editions are obsolete.

GENERATOR'S INITIAL COPY

EPAPA010000175

Please print or type. (Form designed for use on elite (12-pitch) typewriter.) Form Approved. OMB No. 2050-0039

UNIFORM HAZARDOUS WASTE MANIFEST

1. Generator ID Number: TXR000079307
2. Page 1 of 1
3. Emergency Response Phone:
4. Manifest Tracking Number: 005593196 JJK

5. Generator's Name and Mailing Address
CES Environmental Services - Port Arthur
4904 Griggs Road
Houston, TX 77021
State ID: 88585
Generator's Phone:

Generator's Site Address (if different than mailing address)
CES Environmental Services - Port Arthur
2420 Gulfway Drive
Port Arthur, TX 77640

6. Transporter 1 Company Name: CES Environmental Services, Inc. State ID 30900 U.S. EPA ID Number: TXD008950461

7. Transporter 2 Company Name: U.S. EPA ID Number:

8. Designated Facility Name and Site Address
Newark Environmental Services, LLC
26400 Wilber Rd
Winnie TX, 77665
State ID 39098
Facility's Phone: (409) 794-3119
U.S. EPA ID Number: N/A

9a. HM	9b. U.S. DOT Description (including Proper Shipping Name, Hazard Class, ID Number, and Packing Group (if any))	10. Containers No.	10. Containers Type	11. Total Quantity	12. Unit Wt./Vol.	13. Waste Codes	
	1. Non-RCRA/Non DOT regulated wastewater	1	TT	5000	G	00011131	
	2. 005593196						
	3.						
	4.			005593196			

14. Special Handling Instructions and Additional Information
Folder ID : CES Environmental (CES - Port Arthur) 900
Class 1, Non-hazardous Wastewater
PACES SAMPLE ID # _____ - _____ CES Job # - 87611
1) 09260911808H 2) 3) 4)

15. **GENERATOR'S/OFFEROR'S CERTIFICATION:** I hereby declare that the contents of this consignment are fully and accurately described above by the proper shipping name, and are classified, packaged, marked and labeled/placarded, and are in all respects in proper condition for transport according to applicable international and national governmental regulations. If export shipment and I am the Primary Exporter, I certify that the contents of this consignment conform to the terms of the attached EPA Acknowledgment of Consent.
I certify that the waste minimization statement identified in 40 CFR 262.27(a) (if I am a large quantity generator) or (b) (if I am a small quantity generator) is true.

Generator's/Offeror's Printed/Typed Name: Bo Cumbellen-Ogden Signature: Bo O Month 6 Day 12 Year 09

16. International Shipments ☐ Import to U.S. ☐ Export from U.S. Port of entry/exit:
Transporter signature (for exports only): Date leaving U.S.:

17. Transporter Acknowledgment of Receipt of Materials
Transporter 1 Printed/Typed Name: LeRoy Brown Signature: LeRoy Brown Month 6 Day 12 Year 09
Transporter 2 Printed/Typed Name: Signature: Month Day Year

18. Discrepancy
18a. Discrepancy Indication Space ☐ Quantity ☐ Type ☐ Residue ☐ Partial Rejection ☑ Full Rejection
Manifest Reference Number:

18b. Alternate Facility (or Generator) CES ENVIRONMENTAL SERVICE 4904 GRIGGS RD. HOUSTON, TX 77021
U.S. EPA ID Number: TXD008950461
Facility's Phone:

18c. Signature of Alternate Facility (or Generator) Month 43 Day 93 Year 25

19. Hazardous Waste Report Management Method Codes (i.e., codes for hazardous waste treatment, disposal, and recycling systems)
1. H134 2. 3. 4.

20. Designated Facility Owner or Operator: Certification of receipt of hazardous materials covered by the manifest except as noted in Item 18a
Printed/Typed Name: BRIEN WATSON Signature: Brien Watson Month 06 Day 12 Year 09

GENERATOR | INT'L | TRANSPORTER | DESIGNATED FACILITY

EPA Form 8700-22 (Rev. 3-05) Previous editions are obsolete. **DESIGNATED FACILITY TO GENERATOR STATE (IF REQUIRED)**

EPAPA010000176

CES Environmental Services, Inc.

4904 Griggs Road
Houston, TX 77021
Tel. (713) 676-1460
Fax. (713) 676-1676

Transportation Work Ticket

Folder ID : CES Enviornmental (CES - Port Arthur) Class 1, Non-hazardous Wastewater

Date : 6/12/2009 **Manifest # :** 005593196 JJK

Client : CES Environmental Services - Port Arthur **Ticket :** 87611

Phone : **Consignee :** Newpark Environmental Services, LLC

Transporter : CES Environmental Services, Inc.

Signature **Signature**

Leave CES Yard :		**Arrive At Destination**	9:00
Arrive At Customer :		**Begin Unloading :**	
Begin Loading :		**Finish Unloading :**	
Finish Loading :		**Leave Destination :**	9:45
Leave Customer :		**Arrive At CES Yard :**	10:30

Customer PO #:

Total Hours:

CES Unload: ☐

Gross Weight :		**Ending Odometer :**	439401
Tare Weight :		**Begining Odometer :**	439325
Net Weight :		**Total Miles :**	76

Driver : Brown, Leroy **Tractor # :** 285 **Tote # :**

Signature : **Trailer # :** 224 **Box # :**

Job Comments/Equipment : Load Rejected

White (CES Office) Yellow (CES Office / Billing) Pink (CES Office / IFTA) Golden Rod (Customer)

Please print or type. (Form designed for use on elite (12-pitch) typewriter.) Form Approved. OMB No. 2050-0039

UNIFORM HAZARDOUS WASTE MANIFEST

1. Generator ID Number: TXR000079307
2. Page 1 of 1
3. Emergency Response Phone:
4. Manifest Tracking Number: 005593196 JJK

5. Generator's Name and Mailing Address
CES Environmental Services - Port Arthur
4904 Griggs Road
Houston, TX 77021
State ID: 88585
Generator's Phone:

Generator's Site Address (if different than mailing address)
CES Environmental Services - Port Arthur
2420 Gulfway Drive
Port Arthur, TX 77640

6. Transporter 1 Company Name: CES Environmental Services, Inc. State ID 30900 U.S. EPA ID Number: TXD008950461

7. Transporter 2 Company Name U.S. EPA ID Number

8. Designated Facility Name and Site Address
Newpark Environmental Services, LLC
26400 Wilber Rd
Winnie TX, 77665
State ID 39098
Facility's Phone: (409) 794-3119
U.S. EPA ID Number: N/A

9a. HM	9b. U.S. DOT Description (including Proper Shipping Name, Hazard Class, ID Number, and Packing Group (if any))	10. Containers No.	10. Containers Type	11. Total Quantity	12. Unit Wt./Vol.	13. Waste Codes
	1. Non-RCRA/Non DOT regulated wastewater	1	TT	5000	G	00011131
	2.					
	3.					
	4.					

14. Special Handling Instructions and Additional Information
Folder ID : CES Environmental (CES - Port Arthur)
Class 1, Non-hazardous Wastewater
PACES SAMPLE ID # _____ - _____ CES Job # - 87611
1) 0926091180BH 2) 3) 4)

15. **GENERATOR'S/OFFEROR'S CERTIFICATION:** I hereby declare that the contents of this consignment are fully and accurately described above by the proper shipping name, and are classified, packaged, marked and labeled/placarded, and are in all respects in proper condition for transport according to applicable international and national governmental regulations. If export shipment and I am the Primary Exporter, I certify that the contents of this consignment conform to the terms of the attached EPA Acknowledgment of Consent.
I certify that the waste minimization statement identified in 40 CFR 262.27(a) (if I am a large quantity generator) or (b) (if I am a small quantity generator) is true.

Generator's/Offeror's Printed/Typed Name: BO Cumberland Signature: Bo S Month 6 Day 12 Year 09

16. International Shipments ☐ Import to U.S. ☐ Export from U.S. Port of entry/exit:
Transporter signature (for exports only): Date leaving U.S.:

17. Transporter Acknowledgment of Receipt of Materials
Transporter 1 Printed/Typed Name: LeRoy Brown Signature: LeRoy Brown Month 6 Day 12 Year 09
Transporter 2 Printed/Typed Name Signature Month Day Year

18. Discrepancy
18a. Discrepancy Indication Space ☐ Quantity ☐ Type ☐ Residue ☐ Partial Rejection ☑ Full Rejection
Manifest Reference Number:

18b. Alternate Facility (or Generator) CES ENVIRONMENTAL SERVICE 4904 GRIGGS RD. HOUSTON, TX 77021 U.S. EPA ID Number: TXD008950461
Facility's Phone:

18c. Signature of Alternate Facility (or Generator) Month Day Year

19. Hazardous Waste Report Management Method Codes (i.e., codes for hazardous waste treatment, disposal, and recycling systems)
1. H134 2. 3. 4.

20. Designated Facility Owner or Operator: Certification of receipt of hazardous materials covered by the manifest except as noted in Item 18a
Printed/Typed Name: BRIEN WATSON Signature: Brien Watson Month 06 Day 12 Year 09

GENERATOR / INT'L / TRANSPORTER / DESIGNATED FACILITY

EPA Form 8700-22 (Rev. 3-05) Previous editions are obsolete.

DESIGNATED FACILITY TO DESTINATION STATE (IF REQUIRED)

EPAPA010000178

CES Environmental Services, Inc.

4904 Griggs Road
Houston, TX 77021
Tel. (713) 676-1460
Fax. (713) 676-1676

Transportation Work Ticket

Folder ID : CES Enviornmental (CES - Port Arthur) Class 1, Non-hazardous Wastewater

Date : 6/12/2009 **Manifest # :** 005593196 JJK

Client : CES Environmental Services - Port Arthur **Ticket :** 87611

Phone : **Consignee :** Newpark Environmental Services, LLC

Transporter : CES Environmental Services, Inc.

Signature **Signature**

Leave CES Yard :		**Arrive At Destination**	9:00
Arrive At Customer :		**Begin Unloading :**	
Begin Loading :		**Finish Unloading :**	
Finish Loading :		**Leave Destination :**	9:45
Leave Customer :		**Arrive At CES Yard :**	10:30

Customer PO #:

Total Hours:

CES Unload: ☐

Gross Weight :		**Ending Odometer :**	439401
Tare Weight :		**Begining Odometer :**	439325
Net Weight :		**Total Miles :**	76

Driver : Brown, Leroy **Tractor # :** 285 **Tote # :**

Signature : **Trailer # :** 224 **Box # :**

Job Comments/Equipment : Load Rejected

White (CES Office) Yellow (CES Office / Billing) Pink (CES Office / IFTA) Golden Rod (Customer)

METTLER TOLEDO

AUTHORIZED SIGNATURE

Newpark Env. Services LC CN 58897
26400 WILBER RD
WINNE TX 77665

ID	2	GROSS	71300 lb (1)
VEHICLE	1836	TARE	0
TIME	4:30 PM	NET	71300
DATE	06 18 09		

Please print or type. (Form designed for use on elite (12-pitch) typewriter.) Form Approved. OMB No. 2050-0039

UNIFORM HAZARDOUS WASTE MANIFEST

1. Generator ID Number: 88585
2. Page 1 of
3. Emergency Response Phone
4. Manifest Tracking Number: 005593205 JJK

5. Generator's Name and Mailing Address: TXR000079307 1
CES Environmental Services - Port Arthur
Generator's Phone:
State ID: 88585

Generator's Site Address (if different than mailing address)
CES Environmental Services - Port Arthur
2420 Gulfway Drive
Port Arthur, TX 77640

6. Transporter 1 Company Name: Houston, TX 77021
U.S. EPA ID Number:

7. Transporter 2 Company Name: CES Environmental Services, Inc.
State ID 30900
U.S. EPA ID Number: TXD008950461

8. Designated Facility Name and Site Address
Newpark Environmental Services, LLC
Facility's Phone: 26400 Miller Rd
Winnie, TX 77665
(409) 794-3119
State ID 39098
U.S. EPA ID Number:

9a. HM	9b. U.S. DOT Description (including Proper Shipping Name, Hazard Class, ID Number, and Packing Group)	10. Containers No.	10. Containers Type	11. Total Quantity	12. Unit Wt./Vol.	13. Waste Codes
	1. Non-RCRA/Non DOT regulated wastewater	1	TT	N/A	G	00011131
	2.					
	3.					
	4.					

14. Special Handling Instructions and Additional Information
Folder ID : CES Enviornmental (CES - Port Arthur)
Class 1 Non-hazardous Wastewater
PACES SAMPLE ID # 6/30900 8/39098
CES Job # - 87927
1) 09250911508H 2) 3) 4)

15. **GENERATOR'S/OFFEROR'S CERTIFICATION:** I hereby declare that the contents of this consignment are fully and accurately described above by the proper shipping name, and are classified, packaged, marked and labeled/placarded, and are in all respects in proper condition for transport according to applicable international and national governmental regulations. If export shipment and I am the Primary Exporter, I certify that the contents of this consignment conform to the terms of the attached EPA Acknowledgment of Consent.
I certify that the waste minimization statement identified in 40 CFR 262.27(a) (if I am a large quantity generator) or (b) (if I am a small quantity generator) is true.

GENERATOR

Generator's/Offeror's Printed/Typed Name: Bo Cumberland
Signature: Bo Cumberland
Month Day Year: 6 18 09

INT'L

16. International Shipments ☐ Import to U.S. ☐ Export from U.S. Port of entry/exit:
Transporter signature (for exports only): Date leaving U.S.:

TRANSPORTER

17. Transporter Acknowledgment of Receipt of Materials
Transporter 1 Printed/Typed Name: Kevin Wilson
Signature:
Month Day Year: 6 18 09
Transporter 2 Printed/Typed Name:
Signature:
Month Day Year:

DESIGNATED FACILITY

18. Discrepancy
18a. Discrepancy Indication Space ☐ Quantity ☐ Type ☐ Residue ☐ Partial Rejection ☑ Full Rejection
Odor
Manifest Reference Number:

18b. Alternate Facility (or Generator)
CES Port Arthur
2420 Gulfway Dr.
Port Arthur TX 77640
Facility's Phone:
U.S. EPA ID Number: 88585

18c. Signature of Alternate Facility (or Generator)
Month Day Year

19. Hazardous Waste Report Management Method Codes (i.e., codes for hazardous waste treatment, disposal, and recycling systems)
1. H134 2. 3. 4.

20. Designated Facility Owner or Operator: Certification of receipt of hazardous materials covered by the manifest except as noted in Item 18a
Printed/Typed Name: Vicki Hoffpauer
Signature:
Month Day Year: 6 18 09

EPA Form 8700-22 (Rev. 3-05) Previous editions are obsolete.

DESIGNATED FACILITY TO DESTINATION STATE (IF REQUIRED)

Please print or type. (Form designed for use on elite (12-pitch) typewriter.) Form Approved. OMB No. 2050-0039

UNIFORM HAZARDOUS WASTE MANIFEST

1. Generator ID Number: 88585
2. Page 1 of
3. Emergency Response Phone
4. Manifest Tracking Number: 005593205 JJK

5. Generator's Name and Mailing Address: TXR000079307 1
CES Environmental Services - Port Arthur State ID: 88585
Generator's Phone:
7400 Gulfway Road
Houston, TX 77021

Generator's Site Address (if different than mailing address)
CES Environmental Services - Port Arthur
7420 Gulfway Drive
Port Arthur, TX 77640

6. Transporter 1 Company Name: U.S. EPA ID Number:

7. Transporter 2 Company Name: CES Environmental Services, Inc. State ID 30900 U.S. EPA ID Number: TXD008950461

8. Designated Facility Name and Site Address: U.S. EPA ID Number:
Newpark Environmental Services, LLC State ID 39098
Facility's Phone:
7400 Miller Rd
Winnie TX 77665
(409)794-3119

9a. HM	9b. U.S. DOT Description (including Proper Shipping Name, Hazard Class, ID Number, and Packing Group (if any))	10. Containers No.	10. Containers Type	11. Total Quantity	12. Unit Wt./Vol.	13. Waste Codes
	1. Non-RCRA/Non DOT regulated wastewater	1	TT	N/A	G	00011131
	2.					
	3.					
	4.					

14. Special Handling Instructions and Additional Information
Folder ID : CES Environmental (CES - Port Arthur) PACES SAMPLE ID # 6130900 8139098 CES Job # - 87927
Class 1, Non-hazardous Wastewater
1) 0250011580H 2) 3)

15. **GENERATOR'S/OFFEROR'S CERTIFICATION:** I hereby declare that the contents of this consignment are fully and accurately described above by the proper shipping name, and are classified, packaged, marked and labeled/placarded, and are in all respects in proper condition for transport according to applicable international and national governmental regulations. If export shipment and I am the Primary Exporter, I certify that the contents of this consignment conform to the terms of the attached EPA Acknowledgment of Consent.
I certify that the waste minimization statement identified in 40 CFR 262.27(a) (if I am a large quantity generator) or (b) (if I am a small quantity generator) is true.

Generator's/Offeror's Printed/Typed Name: Bo Cumberland Signature: Bo Cumberland Month 6 Day 18 Year 09

INT'L
16. International Shipments ☐ Import to U.S. ☐ Export from U.S. Port of entry/exit:
Transporter signature (for exports only): Date leaving U.S.:

TRANSPORTER
17. Transporter Acknowledgment of Receipt of Materials
Transporter 1 Printed/Typed Name: Kevin Wilson Signature: Month 6 Day 18 Year 09
Transporter 2 Printed/Typed Name: Signature: Month Day Year

DESIGNATED FACILITY
18. Discrepancy
18a. Discrepancy Indication Space ☐ Quantity ☐ Type ☐ Residue ☐ Partial Rejection ☑ Full Rejection
Odor
Manifest Reference Number:
18b. Alternate Facility (or Generator) U.S. EPA ID Number
CES Port Arthur
2420 Gulfway Dr.
Facility's Phone: Port Arthur TX 77640 88585
18c. Signature of Alternate Facility (or Generator) Month Day Year

19. Hazardous Waste Report Management Method Codes (i.e., codes for hazardous waste treatment, disposal, and recycling systems)
1. H134 2. 3. 4.

20. Designated Facility Owner or Operator: Certification of receipt of hazardous materials covered by the manifest except as noted in Item 18a
Printed/Typed Name: Vicki Hoffpauer Signature: Month 6 Day 18 Year 09

EPA Form 8700-22 (Rev. 3-05) Previous editions are obsolete. **DESIGNATED FACILITY TO GENERATOR STATE (IF REQUIRED)**

EPAPA010000182

Please print or type. (Form designed for use on elite (12-pitch) typewriter.) Form Approved. OMB No. 2050-0039

UNIFORM HAZARDOUS WASTE MANIFEST

1. Generator ID Number: 88585
2. Page 1 of
3. Emergency Response Phone
4. Manifest Tracking Number: 005593205 JJK

GENERATOR

5. Generator's Name and Mailing Address: TXR000079307 1
CES Environmental Services - Port Arthur State ID: 88585
Generator's Phone:
Houston, TX 77021

Generator's Site Address (if different than mailing address):
CES Environmental Services - Port Arthur
2420 Gulfway Drive
Port Arthur, TX 77640

6. Transporter 1 Company Name: U.S. EPA ID Number:

7. Transporter 2 Company Name: CES Environmental Services, Inc. State ID 30900 U.S. EPA ID Number: TXD008950461

8. Designated Facility Name and Site Address: U.S. EPA ID Number:
Newark Environmental Services, LLC State ID 39098
Facility's Phone: (713) 794-3119
Winnie, TX 77665

9a. HM	9b. U.S. DOT Description (including Proper Shipping Name, Hazard Class, ID Number, and Packing Group (if any))	10. Containers No.	10. Containers Type	11. Total Quantity	12. Unit Wt./Vol.	13. Waste Codes
	1. Non-RCRA/Non DOT regulated wastewater	1	TT	N/A	G	00011131
	2.					
	3.					
	4.					

14. Special Handling Instructions and Additional Information
Folder ID : CES Environmental (CES - Port Arthur) PACES SAMPLE ID # 630900 839098 CES Job # - 87927
Class 1, Non-hazardous Wastewater
1) 1020-1 1020-1

15. **GENERATOR'S/OFFEROR'S CERTIFICATION:** I hereby declare that the contents of this consignment are fully and accurately described above by the proper shipping name, and are classified, packaged, marked and labeled/placarded, and are in all respects in proper condition for transport according to applicable international and national governmental regulations. If export shipment and I am the Primary Exporter, I certify that the contents of this consignment conform to the terms of the attached EPA Acknowledgment of Consent.
I certify that the waste minimization statement identified in 40 CFR 262.27(a) (if I am a large quantity generator) or (b) (if I am a small quantity generator) is true.

Generator's/Offeror's Printed/Typed Name: BO Cumberland Signature: BO Cumberland Month 6 Day 18 Year 09

INT'L

16. International Shipments ☐ Import to U.S. ☐ Export from U.S. Port of entry/exit:
Transporter signature (for exports only): Date leaving U.S.:

TRANSPORTER

17. Transporter Acknowledgment of Receipt of Materials
Transporter 1 Printed/Typed Name: Kevin Wilson Signature: Month 6 Day 18 Year 09
Transporter 2 Printed/Typed Name: Signature: Month Day Year

DESIGNATED FACILITY

18. Discrepancy
18a. Discrepancy Indication Space ☐ Quantity ☐ Type ☐ Residue ☐ Partial Rejection ☑ Full Rejection
odor
Manifest Reference Number:
18b. Alternate Facility (or Generator) U.S. EPA ID Number:
CES Port Arthur
2420 Gulfway Dr.
Facility's Phone: Port Arthur TX 77640 88585
18c. Signature of Alternate Facility (or Generator) Month Day Year

19. Hazardous Waste Report Management Method Codes (i.e., codes for hazardous waste treatment, disposal, and recycling systems)
1. H134 2. 3. 4.

20. Designated Facility Owner or Operator: Certification of receipt of hazardous materials covered by the manifest except as noted in Item 18a
Printed/Typed Name: Vicki Hoffpauer Signature: Month 6 Day 18 Year 09

EPA Form 8700-22 (Rev. 3-05) Previous editions are obsolete. **DESIGNATED FACILITY TO GENERATOR**

EPAPA010000183

Please print or type. (Form designed for use on elite (12-pitch) typewriter.)

Form Approved. OMB No. 2050-0039

UNIFORM HAZARDOUS WASTE MANIFEST

1. Generator ID Number: 88585
2. Page 1 of
3. Emergency Response Phone
4. Manifest Tracking Number: 005593205 JJK

5. Generator's Name and Mailing Address: TXR000079307

CES Environmental Services - Port Arthur
Generator's Phone:
Houston, TX 77021

State ID: 88585

Generator's Site Address (if different than mailing address): CES Environmental Services - Port Arthur, 2420 Gulfway Drive, Port Arthur, TX 77640

6. Transporter 1 Company Name: U.S. EPA ID Number:

7. Transporter 2 Company Name: CES Environmental Services, Inc. State ID: 30200 U.S. EPA ID Number: TXD008950461

8. Designated Facility Name and Site Address: U.S. EPA ID Number:

Newpark Environmental Services, LLC
Facility's Phone:
Winnie, TX 77665
(713) 794-3119

State ID: 39098

9a. HM	9b. U.S. DOT Description (including Proper Shipping Name, Hazard Class, ID Number, and Packing Group (if any))	10. Containers No.	10. Containers Type	11. Total Quantity	12. Unit Wt./Vol.	13. Waste Codes
	1. Non-RCRA/Non DOT regulated wastewater	1	TT	N/A	G	D001
	2.					
	3.					
	4.					

14. Special Handling Instructions and Additional Information

Foster ID : CES Environmental (CES - Port Arthur) PACES SAMPLE ID # 630940 839098 CES Job # - 87927
Class 1 Non-hazardous Wastewater

15. **GENERATOR'S/OFFEROR'S CERTIFICATION:** I hereby declare that the contents of this consignment are fully and accurately described above by the proper shipping name, and are classified, packaged, marked and labeled/placarded, and are in all respects in proper condition for transport according to applicable international and national governmental regulations. If export shipment and I am the Primary Exporter, I certify that the contents of this consignment conform to the terms of the attached EPA Acknowledgment of Consent.
I certify that the waste minimization statement identified in 40 CFR 262.27(a) (if I am a large quantity generator) or (b) (if I am a small quantity generator) is true.

Generator's/Offeror's Printed/Typed Name: BO Cumberland Signature: Bo Cumberland Month 6 Day 18 Year 09

16. International Shipments ☐ Import to U.S. ☐ Export from U.S. Port of entry/exit:
Transporter signature (for exports only): Date leaving U.S.:

17. Transporter Acknowledgment of Receipt of Materials

Transporter 1 Printed/Typed Name: Kevin W. Lson Signature: Month 6 Day 18 Year 09

Transporter 2 Printed/Typed Name: Signature: Month Day Year

18. Discrepancy

18a. Discrepancy Indication Space ☐ Quantity ☐ Type ☐ Residue ☐ Partial Rejection ☑ Full Rejection

Odor

Manifest Reference Number:

18b. Alternate Facility (or Generator) U.S. EPA ID Number

CES Port Arthur
2420 Gulfway Dr.
Port Arthur TX 77640
Facility's Phone:

88585

18c. Signature of Alternate Facility (or Generator) Month Day Year

19. Hazardous Waste Report Management Method Codes (i.e., codes for hazardous waste treatment, disposal, and recycling systems)

1. H134 2. 3. 4.

20. Designated Facility Owner or Operator: Certification of receipt of hazardous materials covered by the manifest except as noted in Item 18a

Printed/Typed Name: Vicki Hoffpauer Signature: Month 6 Day 18 Year 09

GENERATOR — INT'L — TRANSPORTER — DESIGNATED FACILITY

EPA Form 8700-22 (Rev. 3-05) Previous editions are obsolete.

DESIGNATED FACILITY'S COPY

EPAPA010000184

Please print or type. (Form designed for use on elite (12-pitch) typewriter.)

Form Approved. OMB No. 2050-0039

UNIFORM HAZARDOUS WASTE MANIFEST

1. Generator ID Number: 88585
2. Page 1 of
3. Emergency Response Phone
4. Manifest Tracking Number: 005593205 JJK

5. Generator's Name and Mailing Address: TXR000079307
CES Environmental Services - Port Arthur
State ID: 88585
Generator's Phone:
Generator's Site Address (if different than mailing address): CES Environmental Services - Port Arthur, 2400 Gulfway Drive, Port Arthur, TX 77640

6. Transporter 1 Company Name
U.S. EPA ID Number

7. Transporter 2 Company Name: CES Environmental Services, Inc.
State ID: 30900
U.S. EPA ID Number: TXD008950461

8. Designated Facility Name and Site Address
Newpark Environmental Services, LLC
State ID: 30028
Facility's Phone:
U.S. EPA ID Number

9a. HM	9b. U.S. DOT Description (including Proper Shipping Name, Hazard Class, ID Number, and Packing Group (if any))	10. Containers No.	10. Containers Type	11. Total Quantity	12. Unit Wt./Vol.	13. Waste Codes
	1. Non-RCRA/Non-DOT regulated wastewater	1	TT		G	D001
	2.					
	3.					
	4.					

14. Special Handling Instructions and Additional Information
Profile ID: CES Environmental (CES - Port Arthur) Class 1 Nonhazardous Wastewater
PACES Sample ID #: 6130540 / 131048
CES Job # - 87067

15. **GENERATOR'S/OFFEROR'S CERTIFICATION:** I hereby declare that the contents of this consignment are fully and accurately described above by the proper shipping name, and are classified, packaged, marked and labeled/placarded, and are in all respects in proper condition for transport according to applicable international and national governmental regulations. If export shipment and I am the Primary Exporter, I certify that the contents of this consignment conform to the terms of the attached EPA Acknowledgment of Consent.
I certify that the waste minimization statement identified in 40 CFR 262.27(a) (if I am a large quantity generator) or (b) (if I am a small quantity generator) is true.

Generator's/Offeror's Printed/Typed Name: Bo Cumberland
Signature: Bo Cumberland
Month: 6 Day: 18 Year: 09

16. International Shipments ☐ Import to U.S. ☐ Export from U.S. Port of entry/exit:
Transporter signature (for exports only): Date leaving U.S.:

17. Transporter Acknowledgment of Receipt of Materials
Transporter 1 Printed/Typed Name: Kevin W. Lson
Signature:
Month: 6 Day: 18 Year: 09
Transporter 2 Printed/Typed Name
Signature
Month Day Year

18. Discrepancy
18a. Discrepancy Indication Space ☐ Quantity ☐ Type ☐ Residue ☐ Partial Rejection ☑ Full Rejection
Odor
Manifest Reference Number:

18b. Alternate Facility (or Generator)
Gulf Port Marine
2400 Gulfway Dr.
Port Arthur, TX 77640
Facility's Phone:
U.S. EPA ID Number: 88585

18c. Signature of Alternate Facility (or Generator)
Month Day Year

19. Hazardous Waste Report Management Method Codes (i.e., codes for hazardous waste treatment, disposal, and recycling systems)
1. H134
2.
3.
4.

20. Designated Facility Owner or Operator: Certification of receipt of hazardous materials covered by the manifest except as noted in Item 18a
Printed/Typed Name: Vicki Hoffauer
Signature:
Month: 6 Day: 18 Year: 09

GENERATOR | INT'L | TRANSPORTER | DESIGNATED FACILITY

EPA Form 8700-22 (Rev. 3-05) Previous editions are obsolete.

GENERATOR'S INITIAL COPY

EPAPA010000185

CES Environmental Services, Inc.

4904 Griggs Road
Houston, TX 77021
Tel. (713) 676-1460
Fax. (713) 676-1676

Transportation Work Ticket

Folder ID : CES Enviornmental (CES - Port Arthur) Class 1, Non-hazardous Wastewater

Date : 6/18/2009 **Manifest # :**

Client : CES Environmental Services - Port Arthur **Ticket :** 87927

Phone : **Consignee :** Newpark Environmental Services, LLC

Transporter : CES Environmental Services, Inc.

Signature Bo Cumberland **Signature**

Leave CES Yard :		**Arrive At Destination**	
Arrive At Customer :		**Begin Unloading :**	
Begin Loading :		**Finish Unloading :**	
Finish Loading :		**Leave Destination :**	
Leave Customer :		**Arrive At CES Yard :**	

Customer PO #:

Total Hours:

CES Unload: ☐

Gross Weight :		**Ending Odometer :**	
Tare Weight :		**Begining Odometer :**	
Net Weight :		**Total Miles :**	

Driver : Wilson, Kevin **Tractor # :** 2004 **Tote # :**

Signature : **Trailer # :** 420 **Box # :**

Job Comments/Equipment :

White (CES Office) Yellow (CES Office / Billing) Pink (CES Office / IFTA) Golden Rod (Customer)

Please print or type. (Form designed for use on elite (12-pitch) typewriter.) Form Approved. OMB No. 2050-0039

UNIFORM HAZARDOUS WASTE MANIFEST

1. Generator ID Number: 88585
2. Page 1 of
3. Emergency Response Phone
4. Manifest Tracking Number: 005593204 JJK

5. Generator's Name and Mailing Address: TXR000079307
CES Environmental Services - Port Arthur
Generator's Phone: 1604 Griffing Road
Beaumont, TX 77721
State ID: 88585

Generator's Site Address (if different than mailing address): 1
CES Environmental Services - Port Arthur
2420 Gulfway Drive
Port Arthur, TX 77640

6. Transporter 1 Company Name
U.S. EPA ID Number

7. Transporter 2 Company Name: CES Environmental Services, Inc.
State ID 30900
U.S. EPA ID Number: TXD008950461

8. Designated Facility Name and Site Address
Newpark Environmental Services, LLC
26400 Wilber Rd
Facility's Phone: Waverly, TX 77665 (409) 794-3119
State ID 39098
U.S. EPA ID Number

9a. HM	9b. U.S. DOT Description (including Proper Shipping Name, Hazard Class, ID Number, and Packing Group (if any))	10. Containers No.	10. Containers Type	11. Total Quantity	12. Unit Wt./Vol.	13. Waste Codes
	1. Non-RCRA/Non DOT regulated wastewater	1	TT	5000	G	00011131
	2.					
	3.					
	4.					

N/A

14. Special Handling Instructions and Additional Information
Folder ID : CES Enviornmental (CES - Port Arthur)
Class 1, Non-hazardous Wastewater
PACES SAMPLE ID # 1) 630900 2) 3) 4) 839098 - CES Job # - 87888

15. GENERATOR'S/OFFEROR'S CERTIFICATION: I hereby declare that the contents of this consignment are fully and accurately described above by the proper shipping name, and are classified, packaged, marked and labeled/placarded, and are in all respects in proper condition for transport according to applicable international and national governmental regulations. If export shipment and I am the Primary Exporter, I certify that the contents of this consignment conform to the terms of the attached EPA Acknowledgment of Consent.
I certify that the waste minimization statement identified in 40 CFR 262.27(a) (if I am a large quantity generator) or (b) (if I am a small quantity generator) is true.

Generator's/Offeror's Printed/Typed Name: Baker
Signature: Baker
Month 6 Day 18 Year 09

INT'L
16. International Shipments ☐ Import to U.S. ☐ Export from U.S. Port of entry/exit:
Transporter signature (for exports only): Date leaving U.S.:

TRANSPORTER
17. Transporter Acknowledgment of Receipt of Materials
Transporter 1 Printed/Typed Name: JACK GIPSON
Signature: Jack Gipson
Month 6 Day 18 Year 09
Transporter 2 Printed/Typed Name
Signature
Month Day Year

DESIGNATED FACILITY
18. Discrepancy
18a. Discrepancy Indication Space ☐ Quantity ☐ Type ☐ Residue ☐ Partial Rejection ☑ Full Rejection
Odor
Manifest Reference Number:
18b. Alternate Facility (or Generator) CES PA
2420 Gulfway Drive
Port Arthur TX 77640
U.S. EPA ID Number: 88585
Facility's Phone:
18c. Signature of Alternate Facility (or Generator)
Month Day Year

19. Hazardous Waste Report Management Method Codes (i.e., codes for hazardous waste treatment, disposal, and recycling systems)
1. H134 2. 3. 4.

20. Designated Facility Owner or Operator: Certification of receipt of hazardous materials covered by the manifest except as noted in Item 18a
Printed/Typed Name: Vicki Spencer
Signature
Month 6 Day 18 Year 09

EPA Form 8700-22 (Rev. 3-05) Previous editions are obsolete.

DESIGNATED FACILITY TO DESTINATION STATE (IF REQUIRED)

EPAPA010000187

Please print or type. (Form designed for use on elite (12-pitch) typewriter.) Form Approved. OMB No. 2050-0039

UNIFORM HAZARDOUS WASTE MANIFEST

1. Generator ID Number: 88585
2. Page 1 of
3. Emergency Response Phone
4. Manifest Tracking Number: 005593204 JJK

GENERATOR

5. Generator's Name and Mailing Address: TXR000079307 1
CES Environmental Services - Port Arthur
Generator's Phone:
State ID: 88585
Generator's Site Address (if different than mailing address): CES Environmental Services - Port Arthur, 2420 Gulfway Drive, Port Arthur, TX 77640

6. Transporter 1 Company Name: U.S. EPA ID Number:

7. Transporter 2 Company Name: CES Environmental Services, Inc. State ID 30900 U.S. EPA ID Number: TXD008950461

8. Designated Facility Name and Site Address: Newpark Environmental Services, LLC, 26400 Miller Rd, Winnie TX 77665
Facility's Phone: (409) 794-3119
State ID 39098
U.S. EPA ID Number:

9a. HM	9b. U.S. DOT Description (including Proper Shipping Name, Hazard Class, ID Number, and Packing Group (if any))	10. Containers No.	10. Containers Type	11. Total Quantity N/A	12. Unit Wt./Vol.	13. Waste Codes
	1. Non-RCRA/Non DOT regulated wastewater	1	TT	5000	G	00011131
	2.					
	3.					
	4.					

14. Special Handling Instructions and Additional Information
Folder ID : CES Environmental (CES - Port Arthur)
Class 1, Non-hazardous Wastewater
PACES SAMPLE ID # 6/39(2) 8/39098
CES Job # - 87888

15. **GENERATOR'S/OFFEROR'S CERTIFICATION:** I hereby declare that the contents of this consignment are fully and accurately described above by the proper shipping name, and are classified, packaged, marked and labeled/placarded, and are in all respects in proper condition for transport according to applicable international and national governmental regulations. If export shipment and I am the Primary Exporter, I certify that the contents of this consignment conform to the terms of the attached EPA Acknowledgment of Consent.
I certify that the waste minimization statement identified in 40 CFR 262.27(a) (if I am a large quantity generator) or (b) (if I am a small quantity generator) is true.

Generator's/Offeror's Printed/Typed Name: Bob Signature: Bob Month 6 Day 18 Year 09

INT'L

16. International Shipments ☐ Import to U.S. ☐ Export from U.S. Port of entry/exit:
Transporter signature (for exports only): Date leaving U.S.:

TRANSPORTER

17. Transporter Acknowledgment of Receipt of Materials
Transporter 1 Printed/Typed Name: JACK GIPSON Signature: Jack Gipson Month 6 Day 18 Year 09
Transporter 2 Printed/Typed Name: Signature: Month Day Year

DESIGNATED FACILITY

18. Discrepancy
18a. Discrepancy Indication Space ☐ Quantity ☐ Type ☐ Residue ☐ Partial Rejection ☑ Full Rejection
Odor
Manifest Reference Number:
18b. Alternate Facility (or Generator) CES PA 2420 Gulfway Drive Port Arthur TX 77640
Facility's Phone:
U.S. EPA ID Number: 88585
18c. Signature of Alternate Facility (or Generator) Month Day Year

19. Hazardous Waste Report Management Method Codes (i.e., codes for hazardous waste treatment, disposal, and recycling systems)
1. H134 2. 3. 4.

20. Designated Facility Owner or Operator: Certification of receipt of hazardous materials covered by the manifest except as noted in Item 18a
Printed/Typed Name: Vicki H Spencer Signature: Month 6 Day 18 Year 09

EPA Form 8700-22 (Rev. 3-05) Previous editions are obsolete. **DESIGNATED FACILITY TO GENERATOR**

EPAPA010000188

Please print or type. (Form designed for use on elite (12-pitch) typewriter.) Form Approved. OMB No. 2050-0039

UNIFORM HAZARDOUS WASTE MANIFEST

1. Generator ID Number: 88585
2. Page 1 of
3. Emergency Response Phone
4. Manifest Tracking Number: 005593204 JJK

5. Generator's Name and Mailing Address: TXR000079307
CES Environmental Services - Port Arthur
Generator's Phone:
State ID: 88585
Generator's Site Address (if different than mailing address): CES Environmental Services - Port Arthur, 2420 Gulfway Drive, Port Arthur, TX 77640

6. Transporter 1 Company Name: Houston, TX 77001
U.S. EPA ID Number:

7. Transporter 2 Company Name: CES Environmental Services, Inc.
State ID: 30900
U.S. EPA ID Number: TXD008950461

8. Designated Facility Name and Site Address: Newpark Environmental Services, LLC, 26400 Weber Rd, Waller, TX 77484
Facility's Phone: (281) 794-3119
State ID: 39098
U.S. EPA ID Number:

9a. HM	9b. U.S. DOT Description (including Proper Shipping Name, Hazard Class, ID Number, and Packing Group (if any))	10. Containers No.	10. Containers Type	11. Total Quantity	12. Unit Wt./Vol.	13. Waste Codes
	1. Non-RCRA/Non DOT regulated wastewater	1	TT	5000	G	0001131
	2.					
	3.					
	4.					

14. Special Handling Instructions and Additional Information
Folder ID : CES Environmental (CES - Port Arthur)
Class 1, Non-hazardous Wastewater
PACES SAMPLE ID # 6/39(2) 8/39698
CES Job # - 87888

15. GENERATOR'S/OFFEROR'S CERTIFICATION: I hereby declare that the contents of this consignment are fully and accurately described above by the proper shipping name, and are classified, packaged, marked and labeled/placarded, and are in all respects in proper condition for transport according to applicable international and national governmental regulations. If export shipment and I am the Primary Exporter, I certify that the contents of this consignment conform to the terms of the attached EPA Acknowledgment of Consent.
I certify that the waste minimization statement identified in 40 CFR 262.27(a) (if I am a large quantity generator) or (b) (if I am a small quantity generator) is true.

Generator's/Offeror's Printed/Typed Name: [illegible] Signature: [illegible] Month 6 Day 18 Year 09

16. International Shipments ☐ Import to U.S. ☐ Export from U.S. Port of entry/exit:
Transporter signature (for exports only): Date leaving U.S.:

17. Transporter Acknowledgment of Receipt of Materials
Transporter 1 Printed/Typed Name: JACK GIPSON Signature: [illegible] Month 6 Day 18 Year 09
Transporter 2 Printed/Typed Name: Signature: Month Day Year

18. Discrepancy
18a. Discrepancy Indication Space ☐ Quantity ☐ Type ☐ Residue ☐ Partial Rejection ☑ Full Rejection
Odor
Manifest Reference Number:
18b. Alternate Facility (or Generator) CES PA 2420 Gulfway Drive Port Arthur TX 77640
Facility's Phone:
U.S. EPA ID Number: 88585
18c. Signature of Alternate Facility (or Generator) Month Day Year

19. Hazardous Waste Report Management Method Codes (i.e., codes for hazardous waste treatment, disposal, and recycling systems)
1. H134 2. 3. 4.

20. Designated Facility Owner or Operator: Certification of receipt of hazardous materials covered by the manifest except as noted in Item 18a
Printed/Typed Name: Vicki Spencer Signature: [illegible] Month 6 Day 18 Year 09

GENERATOR | INT'L | TRANSPORTER | DESIGNATED FACILITY

EPA Form 8700-22 (Rev. 3-05) Previous editions are obsolete. **DESIGNATED FACILITY'S COPY**

EPAPA010000189

Please print or type. (Form designed for use on elite (12-pitch) typewriter.) Form Approved. OMB No. 2050-0039

UNIFORM HAZARDOUS WASTE MANIFEST

1. Generator ID Number: 88585
2. Page 1 of
3. Emergency Response Phone
4. Manifest Tracking Number: 005593204 JJK

5. Generator's Name and Mailing Address: TXR000079307 [illegible]
CES Environmental Services - Port Arthur State ID: [illegible]
Generator's Phone: [illegible]

Generator's Site Address (if different than mailing address): [illegible]
CES Environmental Services - Port Arthur
2420 Gulfway Drive
Port Arthur, TX 77640

6. Transporter 1 Company Name: [illegible]
U.S. EPA ID Number:

7. Transporter 2 Company Name: CES Environmental Services, Inc. State ID: 30530
U.S. EPA ID Number: TXD008950461

8. Designated Facility Name and Site Address: [illegible] Environmental Services, LLC
[illegible] Rd State ID: [illegible]
Facility's Phone: 734-3119
U.S. EPA ID Number:

9a. HM	9b. U.S. DOT Description (including Proper Shipping Name, Hazard Class, ID Number, and Packing Group (if any))	10. Containers No.	10. Containers Type	11. Total Quantity	12. Unit Wt./Vol.	13. Waste Codes
	1. Non-RCRA/Non-DOT regulated waste-water	1	TT	2000	G	D001
	2.					
	3.					
	4.					

14. Special Handling Instructions and Additional Information
Hauler ID: CES Environmental (CES - Port Arthur) PACES SAMPLE ID: 63900 8/29/09 CES Job # - [illegible]
Class 1, Non-hazardous Wastewater

15. **GENERATOR'S/OFFEROR'S CERTIFICATION:** I hereby declare that the contents of this consignment are fully and accurately described above by the proper shipping name, and are classified, packaged, marked and labeled/placarded, and are in all respects in proper condition for transport according to applicable international and national governmental regulations. If export shipment and I am the Primary Exporter, I certify that the contents of this consignment conform to the terms of the attached EPA Acknowledgment of Consent.
I certify that the waste minimization statement identified in 40 CFR 262.27(a) (if I am a large quantity generator) or (b) (if I am a small quantity generator) is true.

Generator's/Offeror's Printed/Typed Name: [illegible] Signature: [illegible] Month 6 Day 18 Year 09

INT'L

16. International Shipments ☐ Import to U.S. ☐ Export from U.S. Port of entry/exit:
Transporter signature (for exports only): Date leaving U.S.:

TRANSPORTER

17. Transporter Acknowledgment of Receipt of Materials
Transporter 1 Printed/Typed Name: [illegible] Signature: [illegible] Month 6 Day 18 Year 09
Transporter 2 Printed/Typed Name: Signature: Month Day Year

DESIGNATED FACILITY

18. Discrepancy
18a. Discrepancy Indication Space ☐ Quantity ☐ Type ☐ Residue ☐ Partial Rejection ☑ Full Rejection
Odor
Manifest Reference Number:
18b. Alternate Facility (or Generator) CES PA 2420 Gulfway Drive Port Arthur TX 77640 U.S. EPA ID Number: 88585
Facility's Phone:
18c. Signature of Alternate Facility (or Generator) Month Day Year

19. Hazardous Waste Report Management Method Codes (i.e., codes for hazardous waste treatment, disposal, and recycling systems)
1. H134 2. 3. 4.

20. Designated Facility Owner or Operator: Certification of receipt of hazardous materials covered by the manifest except as noted in Item 18a
Printed/Typed Name: Vicki Hoffman Signature: [illegible] Month 6 Day 18 Year 09

EPA Form 8700-22 (Rev. 3-05) Previous editions are obsolete. **GENERATOR'S INITIAL COPY**

EPAPA010000190

CES Environmental Services, Inc.

4904 Griggs Road
Houston, TX 77021
Tel. (713) 676-1460
Fax. (713) 676-1676

Transportation Work Ticket

Folder ID : CES Enviornmental (CES - Port Arthur) Class 1, Non-hazardous Wastewater

Date : 6/18/2009 **Manifest # :**

Client : CES Environmental Services - Port Arthur **Ticket :** 87888

Phone : **Consignee :** Newpark Environmental Services, LLC

Transporter : CES Environmental Services, Inc.

Signature BO Combs **Signature**

Leave CES Yard :	10:15 AM	**Arrive At Destination**	
Arrive At Customer :	10:55AM	**Begin Unloading :**	
Begin Loading :		**Finish Unloading :**	
Finish Loading :		**Leave Destination :**	
Leave Customer :	11:20AM	**Arrive At CES Yard :**	11:55AM

Customer PO #:

Total Hours:

CES Unload: ☐

Gross Weight :		**Ending Odometer :**	
Tare Weight :		***Begining Odometer :***	
Net Weight :		**Total Miles :**	

Driver : Gipson, Jack **Tractor # :** 278 **Tote # :**

Signature : Jack Gipson **Trailer # :** 419 **Box # :**

Job Comments/Equipment : Rejected load

White (CES Office) Yellow (CES Office / Billing) Pink (CES Office / IFTA) Golden Rod (Customer)

METTLER TOLEDO

AUTHORIZED SIGNATURE

Newpark Env. Services LC CN 58883
26400 WILBER RD
WINNE TX 77665

ID	1	GROSS	75420 lb (1)
VEHICLE	1823	TARE	0
TIME	12:12 PM	NET	75420
DATE	06 18 09		

Please print or type. (Form designed for use on elite (12-pitch) typewriter.) Form Approved. OMB No. 2050-0039

UNIFORM HAZARDOUS WASTE MANIFEST

1. Generator ID Number: 88585
2. Page 1 of
3. Emergency Response Phone
4. Manifest Tracking Number: 005593204 JJK

5. Generator's Name and Mailing Address: TXR000079307 1
CES Environmental Services - Port Arthur
Generator's Phone:
State ID: 88585
Generator's Site Address (if different than mailing address): CES Environmental Services - Port Arthur, 2420 Gulfway Drive, Port Arthur, TX 77640

6. Transporter 1 Company Name: U.S. EPA ID Number:

7. Transporter 2 Company Name: CES Environmental Services, Inc. State ID 30900 U.S. EPA ID Number: TXD008950461

8. Designated Facility Name and Site Address: U.S. EPA ID Number:
Newpark Environmental Services, LLC
26400 Miller Rd
Winnie TX 77665
Facility's Phone: 409-794-3119
State ID 39098

9a. HM	9b. U.S. DOT Description (including Proper Shipping Name, Hazard Class, ID Number, and Packing Group (if any))	10. Containers No.	10. Containers Type	11. Total Quantity	12. Unit Wt./Vol.	13. Waste Codes
	1. Non-RCRA/Non DOT regulated wastewater	1	TT	5000	G	00011131
	2.					
	3.					
	4.					

14. Special Handling Instructions and Additional Information
Folder ID : CES Enviornmental (CES - Port Arthur)
Class 1, Non-hazardous Wastewater
PACES SAMPLE ID # 6|39100 8|39098
CES Job # - 87688

15. **GENERATOR'S/OFFEROR'S CERTIFICATION:** I hereby declare that the contents of this consignment are fully and accurately described above by the proper shipping name, and are classified, packaged, marked and labeled/placarded, and are in all respects in proper condition for transport according to applicable international and national governmental regulations. If export shipment and I am the Primary Exporter, I certify that the contents of this consignment conform to the terms of the attached EPA Acknowledgment of Consent.
I certify that the waste minimization statement identified in 40 CFR 262.27(a) (if I am a large quantity generator) or (b) (if I am a small quantity generator) is true.

Generator's/Offeror's Printed/Typed Name: Bob Signature: Month 6 Day 18 Year 09

16. International Shipments ☐ Import to U.S. ☐ Export from U.S. Port of entry/exit:
Transporter signature (for exports only): Date leaving U.S.:

17. Transporter Acknowledgment of Receipt of Materials
Transporter 1 Printed/Typed Name: JACK GIPSON Signature: Month 6 Day 18 Year 09
Transporter 2 Printed/Typed Name: Signature: Month Day Year

18. Discrepancy
18a. Discrepancy Indication Space ☐ Quantity ☐ Type ☐ Residue ☐ Partial Rejection ☑ Full Rejection
Odor
Manifest Reference Number:
18b. Alternate Facility (or Generator) U.S. EPA ID Number:
CES PA
2420 Gulfway Drive
Port Arthur TX 77640
Facility's Phone:
88585
18c. Signature of Alternate Facility (or Generator) Month Day Year

19. Hazardous Waste Report Management Method Codes (i.e., codes for hazardous waste treatment, disposal, and recycling systems)
1. H134 2. 3. 4.

20. Designated Facility Owner or Operator: Certification of receipt of hazardous materials covered by the manifest except as noted in Item 18a
Printed/Typed Name: Vicki Spencer Signature: Month 6 Day 18 Year 09

GENERATOR | TRANSPORTER | INT'L | DESIGNATED FACILITY

EPA Form 8700-22 (Rev. 3-05) Previous editions are obsolete.

DESIGNATED FACILITY TO GENERATOR STATE (IF REQUIRED)

EPAPA010000193

CES Environmental Services, Inc.

4904 Griggs Road
Houston, TX 77021
Tel. (713) 676-1460
Fax. (713) 676-1676

Transportation Work Ticket

Folder ID : CES Enviornmental (CES - Port Arthur) Class 1, Non-hazardous Wastewater

Date : 6/18/2009 **Manifest # :**

Client : CES Environmental Services - Port Arthur **Ticket :** 87888

Phone : **Consignee :** Newpark Environmental Services, LLC

Transporter : CES Environmental Services, Inc.

Signature BO Cum **Signature**

Leave CES Yard :	10:15 AM	**Arrive At Destination**	
Arrive At Customer :	10:55 AM	**Begin Unloading :**	
Begin Loading :		**Finish Unloading :**	
Finish Loading :		**Leave Destination :**	
Leave Customer :	11:20 AM	**Arrive At CES Yard :**	11:55 AM

Customer PO #:

Total Hours:

CES Unload: ☐

Gross Weight :		**Ending Odometer :**	
Tare Weight :		**Begining Odometer :**	
Net Weight :		**Total Miles :**	

Driver : Gipson, Jack **Tractor # :** 278 **Tote # :**

Signature : Jack Gipson **Trailer # :** 419 **Box # :**

Job Comments/Equipment : Rejected load

White (CES Office) Yellow (CES Office / Billing) Pink (CES Office / IFTA) Golden Rod (Customer)

METTLER TOLEDO

AUTHORIZED SIGNATURE

Newpark Env. Services LC CN 58883
26400 WILBER RD
WINNE TX 77665

ID	1	GROSS	75420	lb (1)
VEHICLE	1823	TARE	0	
TIME	12:12 PM	NET	75420	
DATE	06 18 09			

Please print or type. (Form designed for use on elite (12-pitch) typewriter.)

Form Approved. OMB No. 2050-0039

UNIFORM HAZARDOUS WASTE MANIFEST

1. Generator ID Number: TXR000079307
2. Page 1 of
3. Emergency Response Phone
4. Manifest Tracking Number: 005593199 JJK

5. Generator's Name and Mailing Address: CES Environmental Services - Port Arthur, 4824 Griggs Road, Houston, TX 77021 — State ID: 33585
Generator's Site Address (if different than mailing address): CES Environmental Services - Port Arthur, 2420 Gulfway Drive, Port Arthur, TX 77640
Generator's Phone:

6. Transporter 1 Company Name: CES Environmental Services, Inc. — State ID: 33980 — U.S. EPA ID Number: TXD008050461

7. Transporter 2 Company Name — U.S. EPA ID Number

8. Designated Facility Name and Site Address: Newpark Environmental Services, LLC, 25400 Wilker Rd, Waller TX 77665 — State ID: 39090 — U.S. EPA ID Number
Facility's Phone: (713) 783-3119

9a. HM	9b. U.S. DOT Description (including Proper Shipping Name, Hazard Class, ID Number, and Packing Group (if any))	10. Containers No.	10. Containers Type	11. Total Quantity	12. Unit Wt./Vol.	13. Waste Codes
	1. Non-RCRA/Non DOT regulated wastewater	1	TT	5000	G	
	2.					
	3.					
	4.	U71				

14. Special Handling Instructions and Additional Information
Folder ID: CES Environmental (CES - Port Arthur) Class 1, Non-hazardous Wastewater
PACES SAP PLE ID # 10/87 - CES Loc # - 87812
1) 088585 2) 32900 3) 29095 5620 gal

15. **GENERATOR'S/OFFEROR'S CERTIFICATION:** I hereby declare that the contents of this consignment are fully and accurately described above by the proper shipping name, and are classified, packaged, marked and labeled/placarded, and are in all respects in proper condition for transport according to applicable international and national governmental regulations. If export shipment and I am the Primary Exporter, I certify that the contents of this consignment conform to the terms of the attached EPA Acknowledgment of Consent.
I certify that the waste minimization statement identified in 40 CFR 262.27(a) (if I am a large quantity generator) or (b) (if I am a small quantity generator) is true.

Generator's/Offeror's Printed/Typed Name: Bo Cumberland — Signature — Month 6 Day 16 Year 09

INT'L
16. International Shipments ☐ Import to U.S. ☐ Export from U.S. Port of entry/exit:
Transporter signature (for exports only): Date leaving U.S.:

TRANSPORTER
17. Transporter Acknowledgment of Receipt of Materials
Transporter 1 Printed/Typed Name: Juan Mendoza — Signature — Month 6 Day 16 Year 09
Transporter 2 Printed/Typed Name — Signature — Month Day Year

DESIGNATED FACILITY
18. Discrepancy
18a. Discrepancy Indication Space ☐ Quantity ☐ Type ☐ Residue ☐ Partial Rejection ☐ Full Rejection
Manifest Reference Number:
18b. Alternate Facility (or Generator) — U.S. EPA ID Number
Facility's Phone:
18c. Signature of Alternate Facility (or Generator) — Month Day Year

19. Hazardous Waste Report Management Method Codes (i.e., codes for hazardous waste treatment, disposal, and recycling systems)
1. H134 2. 3. 4.

20. Designated Facility Owner or Operator: Certification of receipt of hazardous materials covered by the manifest except as noted in Item 18a
Printed/Typed Name: Vicki Hoffauer — Signature — Month 6 Day 16 Year 09

EPA Form 8700-22 (Rev. 3-05) Previous editions are obsolete.

TRANSPORTER'S COPY

EPAPA010000196

CES Environmental Services, Inc.

4904 Griggs Road
Houston, TX 77021
Tel. (713) 676-1460
Fax. (713) 676-1676

Transportation Work Ticket

Folder ID : CES Enviormmental (CES - Port Arthur) Class 1, Non-hazardous Wastewater 419

Date : 6/16/2009 **Manifest # :** 005593199

Client : CES Environmental Services - Port Arthur **Ticket :** 87812

Phone : **Consignee :** Newpark Environmental Services, LLC

Transporter : CES Environmental Services, Inc.

Signature Bo Cumbest **Signature**

Leave CES Yard :		**Arrive At Destination**	3:45 Pm
Arrive At Customer :	2:00	**Begin Unloading :**	
Begin Loading :	Pm	**Finish Unloading :**	
Finish Loading :		**Leave Destination :**	5:15 Pm
Leave Customer :	3:00	**Arrive At CES Yard :**	6:00

Customer PO #:

Total Hours:

CES Unload: ☐

Gross Weight :		**Ending Odometer :**	184528
Tare Weight :		**Begining Odometer :**	184452
Net Weight :		**Total Miles :**	76

Driver : Mendoza, Juan **Tractor # :** 2001 **Tote # :**

Signature : **Trailer # :** 419 **Box # :**

Job Comments/Equipment :

White (CES Office) Yellow (CES Office / Billing) Pink (CES Office / IFTA) Golden Rod (Customer)

METTLER TOLEDO

AUTHORIZED SIGNATURE

Newpark Env. Services LC CN 58816
26400 WILBER RD
WINNE TX 77665

ID	0	GROSS	83020 lb (1)
VEHICLE	1630	TARE	33000 lb
TIME	5:27 PM	NET	50020 lb
DATE	06 16 09		

EPAPA010000198

METTLER TOLEDO

AUTHORIZED SIGNATURE

Newpark Env. Services LC CN 58816
26400 WILBER RD
WINNE TX 77665

ID	0	GROSS	83020 lb (1)
VEHICLE	1630	TARE	33000 lb
TIME	5:27 PM	NET	50020 lb
DATE	06 16 09		

EPAPA010000199

7-1 2001

17-4119

DATE 6-16-09 NO. 471

PORT ARTHUR CHEMICAL ENVIRONMENTAL SERVICES
P.O. BOX 218
2420 SOUTH GULFWAY DRIVE
PORT ARTHUR, TEXAS 77640

PACES JOB #

TICKET ID	4712	
06/16/2009	02:44:31 pm	
INBOUND WT	33340	lb
06/16/2009	03:44:52 pm	
OUTBOUND WT	83720	lb
NET WT	50380	

DRIVER ON ☐ OFF ☐

WEIGHED BY Paula Kyzer

Please print or type. (Form designed for use on elite (12-pitch) typewriter.)

Form Approved. OMB No. 2050-0039

UNIFORM HAZARDOUS WASTE MANIFEST

1. Generator ID Number: TXR000079307
2. Page 1 of
3. Emergency Response Phone
4. Manifest Tracking Number: **005593200 JJK**

5. Generator's Name and Mailing Address
CES Environmental Services - Port Arthur
4924 Griggs Road
Houston, TX 77021
State ID: 88585
Generator's Phone:

Generator's Site Address (if different than mailing address)
CES Environmental Services - Port Arthur
2420 Gulfway Drive
Port Arthur, TX 77640

6. Transporter 1 Company Name: CES Environmental Services, Inc.
State ID: 30980
U.S. EPA ID Number: TXD000050461

7. Transporter 2 Company Name
U.S. EPA ID Number

8. Designated Facility Name and Site Address
Newpark Environmental Services, LLC
25400 Weber Rd
Willis, TX 77665
State ID: 39098
Facility's Phone:
U.S. EPA ID Number: TXD000777685

9a. HM	9b. U.S. DOT Description (including Proper Shipping Name, Hazard Class, ID Number, and Packing Group (if any))	10. Containers No.	10. Containers Type	11. Total Quantity	12. Unit Wt./Vol.	13. Waste Codes
	1. Non-RCRA/Non DOT regulated wastewater	1	TT	5000	G	
	2.					
	3.					
	4.	45				

14. Special Handling Instructions and Additional Information
Folder ID: CES Environmental (CES - Port Arthur)
Class 1 Non-Hazardous Wastewater
PACES SAMPLE ID #: 1181
CES Job # - 87814
1) 0926051130CH 2) 1) 88585 6) 30980 5) 39098 4) 5319 gal

15. **GENERATOR'S/OFFEROR'S CERTIFICATION:** I hereby declare that the contents of this consignment are fully and accurately described above by the proper shipping name, and are classified, packaged, marked and labeled/placarded, and are in all respects in proper condition for transport according to applicable international and national governmental regulations. If export shipment and I am the Primary Exporter, I certify that the contents of this consignment conform to the terms of the attached EPA Acknowledgment of Consent.
I certify that the waste minimization statement identified in 40 CFR 262.27(a) (if I am a large quantity generator) or (b) (if I am a small quantity generator) is true.

Generator's/Offeror's Printed/Typed Name: Bo Lambert
Signature:
Month 6 Day 16 Year 09

INT'L

16. International Shipments ☐ Import to U.S. ☐ Export from U.S. Port of entry/exit:
Transporter signature (for exports only): Date leaving U.S.:

TRANSPORTER

17. Transporter Acknowledgment of Receipt of Materials
Transporter 1 Printed/Typed Name: Mike Green
Signature:
Month 6 Day 16 Year 09
Transporter 2 Printed/Typed Name
Signature
Month Day Year

DESIGNATED FACILITY

18. Discrepancy
18a. Discrepancy Indication Space ☐ Quantity ☐ Type ☐ Residue ☐ Partial Rejection ☐ Full Rejection
Manifest Reference Number:
18b. Alternate Facility (or Generator)
U.S. EPA ID Number
Facility's Phone:
18c. Signature of Alternate Facility (or Generator)
Month Day Year

19. Hazardous Waste Report Management Method Codes (i.e., codes for hazardous waste treatment, disposal, and recycling systems)

1.	2.	3.	4.
H134			

20. Designated Facility Owner or Operator: Certification of receipt of hazardous materials covered by the manifest except as noted in Item 18a
Printed/Typed Name: Vicki Hoover
Signature:
Month 6 Day 16 Year 09

EPA Form 8700-22 (Rev. 3-05) Previous editions are obsolete.

TRANSPORTER'S COPY

EPAPA010000201

CES Environmental Services, Inc.

4904 Griggs Road
Houston, TX 77021
Tel. (713) 676-1460
Fax. (713) 676-1676

Transportation Work Ticket

Folder ID : CES Enviornmental (CES - Port Arthur) Class 1, Non-hazardous Wastewater

Date : 6/16/2009 **Manifest # :**

Client : CES Environmental Services - Port Arthur **Ticket :** 87814

Phone : **Consignee :** Newpark Environmental Services, LLC

Transporter : CES Environmental Services, Inc.

Signature **Signature**

Leave CES Yard :	2:25 pm	**Arrive At Destination**	
Arrive At Customer :	3:10pm	**Begin Unloading :**	
Begin Loading :	3:20 pm	**Finish Unloading :**	
Finish Loading :	3:45pm	**Leave Destination :**	
Leave Customer :	3:55 pm	**Arrive At CES Yard :**	4:40 pm

Customer PO #:

Total Hours:

CES Unload: ☐

Gross Weight :		**Ending Odometer :**	
Tare Weight :		**Begining Odometer :**	
Net Weight :		**Total Miles :**	

Driver : Gipson, Jack **Tractor # :** 273 **Tote # :**

Signature : Jack Gipson **Trailer # :** 225 **Box # :**

Job Comments/Equipment : One load of waste water to New Park.

White (CES Office) Yellow (CES Office / Billing) Pink (CES Office / IFTA) Golden Rod (Customer)

METTLER TOLEDO

AUTHORIZED SIGNATURE

Newpark Env. Services LC CN 58808
26400 WILBER RD
WINNE TX 77665

ID	0	GROSS	75360 lb (1)
VEHICLE	1626	TARE	28020 lb
TIME	4:01 PM	NET	47340 lb
DATE	06 16 09		

EPAPA010000203

Please print or type. (Form designed for use on elite (12-pitch) typewriter.)

Form Approved. OMB No. 2050-0039

UNIFORM HAZARDOUS WASTE MANIFEST

1. Generator ID Number: TXR000079307
2. Page 1 of 1
3. Emergency Response Phone
4. Manifest Tracking Number: 005593197 JJK

GENERATOR

5. Generator's Name and Mailing Address
CES Environmental Services - Port Arthur
4924 Griggs Road
Houston, TX 77021
State ID: 39098
Generator's Phone:

Generator's Site Address (if different than mailing address)
CES Environmental Services - Port Arthur
2920 Gulfway Drive
Port Arthur, TX 77640

6. Transporter 1 Company Name: CES Environmental Services, Inc.
State ID: 30900
U.S. EPA ID Number: TXD008050461

7. Transporter 2 Company Name
U.S. EPA ID Number

8. Designated Facility Name and Site Address
Newpark Environmental Services, LLC
26400 Wilker Rd
Winnie TX, 77665
State ID: 39098
U.S. EPA ID Number: HWA
Facility's Phone: (409) 794-3119

9a. HM	9b. U.S. DOT Description (including Proper Shipping Name, Hazard Class, ID Number, and Packing Group (if any))	10. Containers No.	10. Containers Type	11. Total Quantity	12. Unit Wt./Vol.	13. Waste Codes
	1. Non-RCRA/Non DOT regulated wastewater		TT	5000	P	D001 131
	2.					
	3.					
	4.					

14. Special Handling Instructions and Additional Information
Waker ID: CES Environmental (CES - Port Arthur)
Class 1 Non-hazardous Wastewater
PACES SAMPLE ID #: 1011 7 1
CES Job # - 57786
1) 0000091100H 2) 788585 6) 329160 8) 3791918 9) 5706gal

15. **GENERATOR'S/OFFEROR'S CERTIFICATION:** I hereby declare that the contents of this consignment are fully and accurately described above by the proper shipping name, and are classified, packaged, marked and labeled/placarded, and are in all respects in proper condition for transport according to applicable international and national governmental regulations. If export shipment and I am the Primary Exporter, I certify that the contents of this consignment conform to the terms of the attached EPA Acknowledgment of Consent.
I certify that the waste minimization statement identified in 40 CFR 262.27(a) (if I am a large quantity generator) or (b) (if I am a small quantity generator) is true.

Generator's/Offeror's Printed/Typed Name: Do Cumberland
Signature: Do Cumberland
Month 6 Day 16 Year 09

INT'L

16. International Shipments ☐ Import to U.S. ☐ Export from U.S.
Port of entry/exit:
Transporter signature (for exports only):
Date leaving U.S.:

TRANSPORTER

17. Transporter Acknowledgment of Receipt of Materials

Transporter 1 Printed/Typed Name: JACK GIBSON
Signature: Jack Gibson
Month 6 Day 16 Year 09

Transporter 2 Printed/Typed Name
Signature
Month Day Year

DESIGNATED FACILITY

18. Discrepancy

18a. Discrepancy Indication Space ☐ Quantity ☐ Type ☐ Residue ☐ Partial Rejection ☐ Full Rejection

Manifest Reference Number:

18b. Alternate Facility (or Generator)
U.S. EPA ID Number
Facility's Phone:

18c. Signature of Alternate Facility (or Generator)
Month Day Year

19. Hazardous Waste Report Management Method Codes (i.e., codes for hazardous waste treatment, disposal, and recycling systems)

1.	2.	3.	4.
H134			

20. Designated Facility Owner or Operator: Certification of receipt of hazardous materials covered by the manifest except as noted in Item 18a

Printed/Typed Name: Vicki Hoffmann
Signature: Vicki Hoffmann
Month 6 Day 16 Year 09

EPA Form 8700-22 (Rev. 3-05) Previous editions are obsolete.

TRANSPORTER'S COPY

EPAPA010000204

CES Environmental Services, Inc.

4904 Griggs Road
Houston, TX 77021
Tel. (713) 678-1460
Fax. (713) 678-1676

Transportation Work Ticket

Folder ID : CES Enviornmental (CES - Port Arthur) Class 1, Non-hazardous Wastewater

Date : 6/16/2009 **Manifest # :** 005593197 JJK

Client : CES Environmental Services - Port Arthur **Ticket :** 87786

Phone : **Consignee :** Newpark Environmental Services, LLC

Transporter : CES Environmental Services, Inc.

Signature Bo Carlos **Signature**

Leave CES Yard :	10:00 AM	**Arrive At Destination**	
Arrive At Customer :	10:45 AM	**Begin Unloading :**	
Begin Loading :	10:55 AM	**Finish Unloading :**	
Finish Loading :	11:35 AM	**Leave Destination :**	
Leave Customer :	11:45	**Arrive At CES Yard :**	12:35 pm

Customer PO #:

Total Hours:

CES Unload: ☐

Gross Weight :		**Ending Odometer :**	
Tare Weight :		**Begining Odometer :**	
Net Weight :		**Total Miles :**	

Driver : Gipson, Jack **Tractor # :** 273 **Tote # :**

Signature : Jack Gipson **Trailer # :** 225 **Box # :**

Job Comments/Equipment : Haul one load to New Park, waste water

White (CES Office) Yellow (CES Office / Billing) Pink (CES Office / IFTA) Golden Rod (Customer)

METTLER TOLEDO

AUTHORIZED SIGNATURE

Newpark E. [illegible]V. Services LC CN 58796
264[illegible]0 WILB[illegible]ER RD
WIN[illegible]E TX 77[illegible]5

ID	1	GROSS	73580 lb (1)
VEHICLE	1613	TARE	28140 lb
TIME	12:01 PM	NET	45440 lb
DATE	06 16 09		

EPAPA010000206

...rm designed for use on elite (12-pitch) typewriter.) Form Approved. OMB No. 2050-0039

HAZARDOUS ...TE MANIFEST

1. Generator ID Number	2. Page 1 of	3. Emergency Response Phone	4. Manifest Tracking Number
			005593206 JJK

GENERATOR

5. Generator's Name and Mailing Address TXR000079307 1

CES Environmental Services - Port Arthur
4904 Griggs Road
Generator's Phone: 77021
State ID: 88585

Generator's Site Address (if different than mailing address)
CES Environmental Services - Port Arthur
2420 Gulfway Drive
Port Arthur, TX 77640

6. Transporter 1 Company Name — U.S. EPA ID Number

7. Transporter 2 Company Name: CES Environmental Services, Inc. — State ID 30900 — U.S. EPA ID Number: TXD008950461

8. Designated Facility Name and Site Address — U.S. EPA ID Number

Newpark Environmental Services, LLC
26400 Wilber Rd
Facility's Phone: (409) 754-3118
Anahuac, TX 77665
State ID 39098

9a. HM	9b. U.S. DOT Description (including Proper Shipping Name, Hazard Class, ID Number, and Packing Group (if any))	10. Containers No.	10. Containers Type	11. Total Quantity (N/A)	12. Unit Wt./Vol.	13. Waste Codes
	1. Non-RCRA/Non DOT regulated wastewater	1	TT	5000	G	0001 1131
	2.					
	3.					
	4.					

14. Special Handling Instructions and Additional Information

Folder ID : CES Environmental (CES - Port Arthur) PACES SAMPLE ID # _____ - _____ CES Job # - 87981
Class 1, Non-hazardous Wastewater 1) 88585 2) 30900 3) 39098
1) 0926091166DU 2)

15. **GENERATOR'S/OFFEROR'S CERTIFICATION:** I hereby declare that the contents of this consignment are fully and accurately described above by the proper shipping name, and are classified, packaged, marked and labeled/placarded, and are in all respects in proper condition for transport according to applicable international and national governmental regulations. If export shipment and I am the Primary Exporter, I certify that the contents of this consignment conform to the terms of the attached EPA Acknowledgment of Consent.
I certify that the waste minimization statement identified in 40 CFR 262.27(a) (if I am a large quantity generator) or (b) (if I am a small quantity generator) is true.

Generator's/Offeror's Printed/Typed Name: Dennette Sartin — Signature: Dennette Sartin — Month 6 Day 19 Year 09

INT'L

16. International Shipments ☐ Import to U.S. ☐ Export from U.S. Port of entry/exit:
Transporter signature (for exports only): Date leaving U.S.:

TRANSPORTER

17. Transporter Acknowledgment of Receipt of Materials

Transporter 1 Printed/Typed Name: JACK GIBSON — Signature: Jack Gibson — Month 6 Day 19 Year 09

Transporter 2 Printed/Typed Name — Signature — Month Day Year

DESIGNATED FACILITY

18. Discrepancy

18a. Discrepancy Indication Space ☐ Quantity ☐ Type ☐ Residue ☐ Partial Rejection ☑ Full Rejection

Odor

Manifest Reference Number:

18b. Alternate Facility (or Generator) — U.S. EPA ID Number

CES
2420 Gulfway Drive
Port Arthur TX 77640
Facility's Phone:
88585

18c. Signature of Alternate Facility (or Generator) — Month Day Year

19. Hazardous Waste Report Management Method Codes (i.e., codes for hazardous waste treatment, disposal, and recycling systems)

1.	2.	3.	4.
H134			

20. Designated Facility Owner or Operator: Certification of receipt of hazardous materials covered by the manifest except as noted in Item 18a

Printed/Typed Name: Vicki Spencer — Signature: Vicki Spencer — Month 6 Day 19 Year 09

EPA Form 8700-22 (Rev. 3-05) Previous editions are obsolete.

DESIGNATED FACILITY TO DESTINATION STATE (IF REQUIRED)

Please print or type. (Form designed for use on elite (12-pitch) typewriter.) Form Approved. OMB No. 2050-0039

UNIFORM HAZARDOUS WASTE MANIFEST

1. Generator ID Number
2. Page 1 of
3. Emergency Response Phone
4. Manifest Tracking Number: 005593206 JJK

5. Generator's Name and Mailing Address TXR000079307 1
CES Environmental Services - Port Arthur
4904 Griggs Road
Generator's Phone: 77021
State ID: 88585

Generator's Site Address (if different than mailing address)
CES Environmental Services - Port Arthur
2420 Gulfway Drive
Port Arthur, TX 77640

6. Transporter 1 Company Name
U.S. EPA ID Number

7. Transporter 2 Company Name: CES Environmental Services, Inc.
State ID 30900
U.S. EPA ID Number: PAD006950461

8. Designated Facility Name and Site Address
Newpark Environmental Services, LLC
26400 Wilber Rd
Facility's Phone: (409) 794-3118 77665
State ID 39098
U.S. EPA ID Number

9a. HM	9b. U.S. DOT Description (including Proper Shipping Name, Hazard Class, ID Number, and Packing Group (if any))	10. Containers No.	10. Containers Type	11. Total Quantity	12. Unit Wt./Vol.	13. Waste Codes
	1. Non-RCRA/Non DOT regulated wastewater	1	TT	5000	G	00011131
	2.					
	3.					
	4.					

N/A

14. Special Handling Instructions and Additional Information
Folder ID : CES Enviornmental (CES - Port Arthur)
Class 1, Non-hazardous Wastewater
PACES SAMPLE ID # _____ - _____
CES Job # - 87981
1) 88585 6) 30900 8) 39098
1) 0926031100BU

15. GENERATOR'S/OFFEROR'S CERTIFICATION: I hereby declare that the contents of this consignment are fully and accurately described above by the proper shipping name, and are classified, packaged, marked and labeled/placarded, and are in all respects in proper condition for transport according to applicable international and national governmental regulations. If export shipment and I am the Primary Exporter, I certify that the contents of this consignment conform to the terms of the attached EPA Acknowledgment of Consent.
I certify that the waste minimization statement identified in 40 CFR 262.27(a) (if I am a large quantity generator) or (b) (if I am a small quantity generator) is true.

Generator's/Offeror's Printed/Typed Name: Dennette Sartin
Signature: Dennette Sartin
Month 6 Day 19 Year 09

16. International Shipments ☐ Import to U.S. ☐ Export from U.S. Port of entry/exit:
Transporter signature (for exports only): Date leaving U.S.:

17. Transporter Acknowledgment of Receipt of Materials
Transporter 1 Printed/Typed Name: JACK GIBSON
Signature: Jack Gibson
Month 6 Day 19 Year 09
Transporter 2 Printed/Typed Name
Signature
Month Day Year

18. Discrepancy
18a. Discrepancy Indication Space ☐ Quantity ☐ Type ☐ Residue ☐ Partial Rejection ☑ Full Rejection
Odor
Manifest Reference Number:

18b. Alternate Facility (or Generator) CES PA 2420 Gulfway Drive Port Arthur TX 77640
U.S. EPA ID Number 88585
Facility's Phone:

18c. Signature of Alternate Facility (or Generator)
Month Day Year

19. Hazardous Waste Report Management Method Codes (i.e., codes for hazardous waste treatment, disposal, and recycling systems)
1. H134 2. 3. 4.

20. Designated Facility Owner or Operator: Certification of receipt of hazardous materials covered by the manifest except as noted in Item 18a
Printed/Typed Name: Vicki H Spencer
Signature
Month 6 Day 19 Year 09

GENERATOR | INTL | TRANSPORTER | DESIGNATED FACILITY

EPA Form 8700-22 (Rev. 3-05) Previous editions are obsolete.

DESIGNATED FACILITY TO GENERATOR STATE (IF REQUIRED)

EPAPA010000208

Please print or type. (Form designed for use on elite (12-pitch) typewriter.) Form Approved. OMB No. 2050-0039

UNIFORM HAZARDOUS WASTE MANIFEST

1. Generator ID Number
2. Page 1 of
3. Emergency Response Phone
4. Manifest Tracking Number: 005593206 JJK

5. Generator's Name and Mailing Address TXR000079307

CES Environmental Services - Port Arthur
4904 Griggs Road
Generator's Phone: 77021

State ID: 88585

Generator's Site Address (if different than mailing address)
CES Environmental Services - Port Arthur
2420 Gulfway Drive
Port Arthur, TX 77640

6. Transporter 1 Company Name
U.S. EPA ID Number

7. Transporter 2 Company Name CES Environmental Services, Inc.
State ID 30900
U.S. EPA ID Number TXD066950461

8. Designated Facility Name and Site Address
U.S. EPA ID Number

Newpark Environmental Services, LLC
26400 Wilber Rd
Facility's Phone: 77665 (409) 724-3418

State ID 39098

9a. HM	9b. U.S. DOT Description (including Proper Shipping Name, Hazard Class, ID Number, and Packing Group (if any))	10. Containers No.	10. Containers Type	11. Total Quantity	12. Unit Wt./Vol.	13. Waste Codes
	1. Non-RCRA/Non DOT regulated wastewater	1	TT	5000	G	D001
	2.					
	3.					
	4.					

N/A

14. Special Handling Instructions and Additional Information

Folder ID : CES Enviornmental (CES - Port Arthur)
Class 1, Non-hazardous Wastewater
PACES SAMPLE ID # _____ - _____
CES Job # - 87981
1) 88585 6) 30900 8) 39098

15. **GENERATOR'S/OFFEROR'S CERTIFICATION:** I hereby declare that the contents of this consignment are fully and accurately described above by the proper shipping name, and are classified, packaged, marked and labeled/placarded, and are in all respects in proper condition for transport according to applicable international and national governmental regulations. If export shipment and I am the Primary Exporter, I certify that the contents of this consignment conform to the terms of the attached EPA Acknowledgment of Consent.
I certify that the waste minimization statement identified in 40 CFR 262.27(a) (if I am a large quantity generator) or (b) (if I am a small quantity generator) is true.

Generator's/Offeror's Printed/Typed Name: Dennette Sartin
Signature: Dennette Sartin
Month 6 Day 19 Year 09

16. International Shipments ☐ Import to U.S. ☐ Export from U.S. Port of entry/exit:
Transporter signature (for exports only): Date leaving U.S.:

17. Transporter Acknowledgment of Receipt of Materials

Transporter 1 Printed/Typed Name: JACK GIBSON
Signature: Jack Gibson
Month 6 Day 19 Year 09

Transporter 2 Printed/Typed Name
Signature
Month Day Year

18. Discrepancy

18a. Discrepancy Indication Space ☐ Quantity ☐ Type ☐ Residue ☐ Partial Rejection ☑ Full Rejection

odor

Manifest Reference Number:

18b. Alternate Facility (or Generator) CES PA
2420 Gulfway Drive
Port Arthur TX 77640
U.S. EPA ID Number 88585
Facility's Phone:

18c. Signature of Alternate Facility (or Generator)
Month Day Year

19. Hazardous Waste Report Management Method Codes (i.e., codes for hazardous waste treatment, disposal, and recycling systems)

1. H134 2. 3. 4.

20. Designated Facility Owner or Operator: Certification of receipt of hazardous materials covered by the manifest except as noted in Item 18a

Printed/Typed Name: Vicki Hopper
Signature
Month 6 Day 19 Year 09

GENERATOR | INT'L | TRANSPORTER | DESIGNATED FACILITY

EPA Form 8700-22 (Rev. 3-05) Previous editions are obsolete.

DESIGNATED FACILITY TO GENERATOR

EPAPA010000209

Please print or type. (Form designed for use on elite (12-pitch) typewriter.) Form Approved. OMB No. 2050-0039

UNIFORM HAZARDOUS WASTE MANIFEST

1. Generator ID Number
2. Page 1 of
3. Emergency Response Phone
4. Manifest Tracking Number: 005593206 JJK

5. Generator's Name and Mailing Address TXR000079307 1
CES Environmental Services - Port Arthur
4904 Griggs Road
Generator's Phone: 77621
State ID: 88585

Generator's Site Address (if different than mailing address)
CES Environmental Services - Port Arthur
2420 Gulfway Drive
Port Arthur, TX 77640

6. Transporter 1 Company Name
U.S. EPA ID Number

7. Transporter 2 Company Name: CES Environmental Services, Inc.
State ID 30800
U.S. EPA ID Number: TXD008950461

8. Designated Facility Name and Site Address
Newpark Environmental Services, LLC
26400 Weber Rd
Facility's Phone: 77665 (409) 794-2010
State ID 39098
U.S. EPA ID Number

9a. HM	9b. U.S. DOT Description (including Proper Shipping Name, Hazard Class, ID Number, and Packing Group (if any))	10. Containers No.	10. Containers Type	11. Total Quantity	12. Unit Wt./Vol.	13. Waste Codes
	1. Non-RCRA/Non DOT regulated wastewater	1	TT	5000	G	00011131
	2.					
	3.					
	4.					

14. Special Handling Instructions and Additional Information
Folder ID : CES Environmental (CES - Port Arthur)
Class 1, Non-hazardous Wastewater
PACES SAMPLE ID # _____ CES Job # - 87981
1) 88585 6) 30900 8) 39098

15. GENERATOR'S/OFFEROR'S CERTIFICATION: I hereby declare that the contents of this consignment are fully and accurately described above by the proper shipping name, and are classified, packaged, marked and labeled/placarded, and are in all respects in proper condition for transport according to applicable international and national governmental regulations. If export shipment and I am the Primary Exporter, I certify that the contents of this consignment conform to the terms of the attached EPA Acknowledgment of Consent.
I certify that the waste minimization statement identified in 40 CFR 262.27(a) (if I am a large quantity generator) or (b) (if I am a small quantity generator) is true.

Generator's/Offeror's Printed/Typed Name: Dennette Sartin
Signature: Dennette Sartin
Month 6 Day 19 Year 09

16. International Shipments ☐ Import to U.S. ☐ Export from U.S. Port of entry/exit:
Transporter signature (for exports only): Date leaving U.S.:

17. Transporter Acknowledgment of Receipt of Materials
Transporter 1 Printed/Typed Name: JACK GIBSON
Signature: Jack Gibson
Month 6 Day 19 Year 09
Transporter 2 Printed/Typed Name
Signature
Month Day Year

18. Discrepancy
18a. Discrepancy Indication Space ☐ Quantity ☐ Type ☐ Residue ☐ Partial Rejection ☑ Full Rejection
Odor
Manifest Reference Number:

18b. Alternate Facility (or Generator) CES PA 2420 Gulfway Drive
U.S. EPA ID Number 88585
Facility's Phone: Prt Arthur TX 77640

18c. Signature of Alternate Facility (or Generator)
Month Day Year

19. Hazardous Waste Report Management Method Codes (i.e., codes for hazardous waste treatment, disposal, and recycling systems)
1. H131 2. 3. 4.

20. Designated Facility Owner or Operator: Certification of receipt of hazardous materials covered by the manifest except as noted in Item 18a
Printed/Typed Name: Vicki H Spencer
Signature
Month 6 Day 19 Year 09

GENERATOR | INT'L | TRANSPORTER | DESIGNATED FACILITY

EPA Form 8700-22 (Rev. 3-05) Previous editions are obsolete. **DESIGNATED FACILITY'S COPY**

EPAPA010000210

Please print or type. (Form designed for use on elite (12-pitch) typewriter.) Form Approved. OMB No. 2050-0039

UNIFORM HAZARDOUS WASTE MANIFEST

1. Generator ID Number
2. Page 1 of
3. Emergency Response Phone
4. Manifest Tracking Number **005593206 JJK**

GENERATOR

5. Generator's Name and Mailing Address TXR000079307
CES Environmental Services - Port Arthur
6604 Griggs Road
Generator's Phone:

Generator's Site Address (if different than mailing address)
CES Environmental Services - Port Arthur
2501 Gulfway Drive
Port Arthur, TX 77640

6. Transporter 1 Company Name — U.S. EPA ID Number

7. Transporter 2 Company Name — U.S. EPA ID Number

8. Designated Facility Name and Site Address — U.S. EPA ID Number
Newport Environmental Services, LLC
3400 Wilson Rd
Facility's Phone:

9a. HM	9b. U.S. DOT Description (including Proper Shipping Name, Hazard Class, ID Number, and Packing Group (if any))	10. Containers No.	10. Containers Type	11. Total Quantity	12. Unit Wt./Vol.	13. Waste Codes
	1. Non-RCRA Non-DOT regulated wastewater	1	TT	5000	G	
	2.					
	3.					
	4.					

14. Special Handling Instructions and Additional Information
Profile ID: CES Environmental (CES - Port Arthur) PACES SAMPLE ID #: CES Job # - 37581
Class 1, Non-hazardous Wastewater 1) 88505 6) 5000 5) 29.98

15. **GENERATOR'S/OFFEROR'S CERTIFICATION:** I hereby declare that the contents of this consignment are fully and accurately described above by the proper shipping name, and are classified, packaged, marked and labeled/placarded, and are in all respects in proper condition for transport according to applicable international and national governmental regulations. If export shipment and I am the Primary Exporter, I certify that the contents of this consignment conform to the terms of the attached EPA Acknowledgment of Consent.
I certify that the waste minimization statement identified in 40 CFR 262.27(a) (if I am a large quantity generator) or (b) (if I am a small quantity generator) is true.

Generator's/Offeror's Printed/Typed Name: Dennis Sutton — Signature: [signature] — Month 6 Day 19 Year 09

INT'L

16. International Shipments ☐ Import to U.S. ☐ Export from U.S. Port of entry/exit:
Transporter signature (for exports only): Date leaving U.S.:

TRANSPORTER

17. Transporter Acknowledgment of Receipt of Materials
Transporter 1 Printed/Typed Name: JACK GRIFFIN — Signature: [signature] — Month 6 Day 19 Year 09
Transporter 2 Printed/Typed Name — Signature — Month Day Year

DESIGNATED FACILITY

18. Discrepancy
18a. Discrepancy Indication Space ☐ Quantity ☐ Type ☐ Residue ☐ Partial Rejection ☑ Full Rejection
Odor
Manifest Reference Number:
18b. Alternate Facility (or Generator) — U.S. EPA ID Number
CES Port Arthur
2501 Gulfway Drive
Facility's Phone: Port Arthur TX 77640 — 88505
18c. Signature of Alternate Facility (or Generator) — Month Day Year

19. Hazardous Waste Report Management Method Codes (i.e., codes for hazardous waste treatment, disposal, and recycling systems)
1. H131 2. 3. 4.

20. Designated Facility Owner or Operator: Certification of receipt of hazardous materials covered by the manifest except as noted in Item 18a
Printed/Typed Name: Vicki Hoffauer — Signature: [signature] — Month 6 Day 19 Year 09

EPA Form 8700-22 (Rev. 3-05) Previous editions are obsolete. **GENERATOR'S INITIAL COPY**

EPAPA010000211

CES Environmental Services, Inc.

4904 Griggs Road
Houston, TX 77021
Tel. (713) 676-1460
Fax. (713) 676-1676

Transportation Work Ticket

Folder ID : CES Enviornmental (CES - Port Arthur) Class 1, Non-hazardous Wastewater

Date : 6/19/2009 **Manifest # :**

Client : CES Environmental Services - Port Arthur **Ticket :** 87981

Phone : **Consignee :** Newpark Environmental Services, LLC

Transporter : CES Environmental Services, Inc.

Signature Dennette Sirton **Signature**

Leave CES Yard :	3:25pm	**Arrive At Destination**	
Arrive At Customer :	4:00pm	**Begin Unloading :**	
Begin Loading :		**Finish Unloading :**	
Finish Loading :		**Leave Destination :**	
Leave Customer :	4:20pm	**Arrive At CES Yard :**	5:00pm

Customer PO #:

Total Hours:

CES Unload: ☐

Gross Weight :		**Ending Odometer :**	
Tare Weight :		**Begining Odometer :**	
Net Weight :		**Total Miles :**	

Driver : Gipson, Jack **Tractor # :** 299 **Tote # :**

Signature : Jack Gipson **Trailer # :** 224 **Box # :**

Job Comments/Equipment : one load of waste water to New Dark Rejected Load.

White (CES Office) Yellow (CES Office / Billing) Pink (CES Office / IFTA) Golden Rod (Customer)

Please print or type. (Form designed for use on elite (12-pitch) typewriter.)

Form Approved. OMB No. 2050-0039

UNIFORM HAZARDOUS WASTE MANIFEST

1. Generator ID Number: TXD988076295
2. Page 1 of 1
3. Emergency Response Phone: (409) 985-4200
4. Manifest Tracking Number: 005592122 JJK

5. Generator's Name and Mailing Address
KMTEX
PO Box 1421
Port Arthur, TX 77640
State ID: 23491
Generator's Phone: (409) 985-4200

Generator's Site Address (if different than mailing address)
KMTEX
2450 South Gulfway Drive
Port Arthur, TX 77640
(409) 985-4200

6. Transporter 1 Company Name: CES Environmental Services, Inc.
State ID 30900
U.S. EPA ID Number: TXD008950461

7. Transporter 2 Company Name
U.S. EPA ID Number

8. Designated Facility Name and Site Address
Newark Environmental Services, LLC
26400 Wilber Rd
Winnie TX, 77665
State ID 39056
Facility's Phone: (409) 794-3119
U.S. EPA ID Number: N/A

9a. HM	9b. U.S. DOT Description (including Proper Shipping Name, Hazard Class, ID Number, and Packing Group (if any))	10. Containers No.	10. Containers Type	11. Total Quantity	12. Unit Wt./Vol.	13. Waste Codes
	~~Non RCRA/Non DOT regulated wastewater~~ Waste flammable liquids, n.o.s. (wastewater containing methanol), 3, UN1993, PG I	1	TT	4520	P	~~1000191~~ 1001191
	2.					
	3.					
	4.					

14. Special Handling Instructions and Additional Information
CES Job # - 66940
Folder ID: KMTEX (KMTEX - Port Arthur - TX)
Methanol Wastewater
1) -0407050616H 2) 1123491 6PBGLO 8/39058 4) 5724gal

15. **GENERATOR'S/OFFEROR'S CERTIFICATION:** I hereby declare that the contents of this consignment are fully and accurately described above by the proper shipping name, and are classified, packaged, marked and labeled/placarded, and are in all respects in proper condition for transport according to applicable international and national governmental regulations. If export shipment and I am the Primary Exporter, I certify that the contents of this consignment conform to the terms of the attached EPA Acknowledgment of Consent.
I certify that the waste minimization statement identified in 40 CFR 262.27(a) (if I am a large quantity generator) or (b) (if I am a small quantity generator) is true.

Generator's/Offeror's Printed/Typed Name: [illegible] Signature: [illegible] Month 6 Day 20 Year 19

16. International Shipments ☐ Import to U.S. ☐ Export from U.S. Port of entry/exit:
Transporter signature (for exports only): Date leaving U.S.:

17. Transporter Acknowledgment of Receipt of Materials
Transporter 1 Printed/Typed Name: Lalay Beaver Signature: [illegible] Month 6 Day 22 Year 19
Transporter 2 Printed/Typed Name: Signature: Month Day Year

18. Discrepancy
18a. Discrepancy Indication Space ☐ Quantity ☐ Type ☐ Residue ☐ Partial Rejection ☐ Full Rejection
Manifest Reference Number:

18b. Alternate Facility (or Generator) U.S. EPA ID Number
Facility's Phone:

18c. Signature of Alternate Facility (or Generator) Month Day Year

19. Hazardous Waste Report Management Method Codes (i.e., codes for hazardous waste treatment, disposal, and recycling systems)
1. H134 2. 3. 4.

20. Designated Facility Owner or Operator: Certification of receipt of hazardous materials covered by the manifest except as noted in Item 18a
Printed/Typed Name: Vicki Hefner Signature: [illegible] Month 6 Day 22 Year 19

GENERATOR / INT'L / TRANSPORTER / DESIGNATED FACILITY

EPA Form 8700-22 (Rev. 3-05) Previous editions are obsolete.

TRANSPORTER'S COPY

EPAPA010000213

CES Environmental Services, Inc.

4904 Griggs Road
Houston, TX 77021
Tel. (713) 676-1460
Fax. (713) 676-1676

Transportation Work Ticket

Folder ID : KMTEX (KMTEX - Port Arthur - TX) Methanol Wastewater

Date : 6/22/2009 **Manifest # :** 005592122

Client : KMTEX **Ticket :** 87975

Phone : 4099854200 **Consignee :** Newpark Environmental Services, LLC

Transporter : CES Environmental (Port Arthur)

Signature **Signature**

Leave CES Yard :		**Arrive At Destination**	15:30
Arrive At Customer :	13:30	**Begin Unloading :**	
Begin Loading :		**Finish Unloading :**	
Finish Loading :		**Leave Destination :**	16:00
Leave Customer :	14:45	**Arrive At CES Yard :**	

Customer PO #:

Total Hours:

CES Unload: ☐

Gross Weight :	76,080	**Ending Odometer :**	440911
Tare Weight :	32,560	**Begining Odometer :**	440835
Net Weight :	43,520	**Total Miles :**	76

Driver : Brown, Leroy **Tractor # :** 285 **Tote # :**

Signature : **Trailer # :** 227 **Box # :**

Job Comments/Equipment :

White (CES Office) Yellow (CES Office / Billing) Pink (CES Office / IFTA) Golden Rod (Customer)

METTLER TOLEDO

AUTHORIZED SIGNATURE

Newpark Env. Services LC CN 58981
26400 WILBER RD
WINNE TX 77665

ID	0	GROSS	76200 lb	(1)
VEHICLE	2237	TARE	32700 lb	
TIME	4:16 PM	NET	43500 lb	
DATE	06 22 09			

EPAPA010000215

Please print or type. (Form designed for use on elite (12-pitch) typewriter.) Form Approved. OMB No. 2050-0039

UNIFORM HAZARDOUS WASTE MANIFEST

1. Generator ID Number: TXD988076295
2. Page 1 of 1
3. Emergency Response Phone: (409) 985-4200
4. Manifest Tracking Number: 005592121 JJK

5. Generator's Name and Mailing Address
KMTEX
PO Box 1421
Port Arthur, TX 77640
Generator's Phone: (409) 985-4200
State ID: 23491

Generator's Site Address (if different than mailing address)
KMTEX
2450 South Gulfway Drive
Port Arthur, TX 77640
(409) 985-4200

6. Transporter 1 Company Name: CES Environmental Services, Inc. State ID 30600
U.S. EPA ID Number: TXD008950461

7. Transporter 2 Company Name
U.S. EPA ID Number

8. Designated Facility Name and Site Address
Newark Environmental Services, LLC
26400 Wilber Rd
Winnie Tx, 77665
Facility's Phone: (409) 794-3119
State ID 39098
U.S. EPA ID Number: N/A

9a. HM	9b. U.S. DOT Description (including Proper Shipping Name, Hazard Class, ID Number, and Packing Group (if any))	10. Containers No.	10. Containers Type	11. Total Quantity	12. Unit Wt./Vol.	13. Waste Codes
P	1. ~~Non RCRA/Non DOT regulated wastewater~~ Waste ~~water~~ Flammable liquids, n.o.s. (wastewater containing methanol) 3 UN 1993 PG I	1	TT	113410	P	~~[illegible]~~ D001 U19
	2.					
	3.			22		
	4.					

14. Special Handling Instructions and Additional Information
CES Job # - 96940
Folder ID : KMTEX (KMTEX - Port Arthur - TX)
Methanol Wastewater
1) 040709061GH 2) 3) 4) 5) 5181960

15. **GENERATOR'S/OFFEROR'S CERTIFICATION:** I hereby declare that the contents of this consignment are fully and accurately described above by the proper shipping name, and are classified, packaged, marked and labeled/placarded, and are in all respects in proper condition for transport according to applicable international and national governmental regulations. If export shipment and I am the Primary Exporter, I certify that the contents of this consignment conform to the terms of the attached EPA Acknowledgment of Consent.
I certify that the waste minimization statement identified in 40 CFR 262.27(a) (if I am a large quantity generator) or (b) (if I am a small quantity generator) is true.

Generator's/Offeror's Printed/Typed Name: Alan Day
Signature
Month 6 Day 23 Year 09

16. International Shipments ☐ Import to U.S. ☐ Export from U.S. Port of entry/exit:
Transporter signature (for exports only): Date leaving U.S.:

17. Transporter Acknowledgment of Receipt of Materials
Transporter 1 Printed/Typed Name: Velez Brian
Signature
Month 6 Day 23 Year 09
Transporter 2 Printed/Typed Name
Signature
Month Day Year

18. Discrepancy
18a. Discrepancy Indication Space ☐ Quantity ☐ Type ☐ Residue ☐ Partial Rejection ☐ Full Rejection
Manifest Reference Number:

18b. Alternate Facility (or Generator)
U.S. EPA ID Number
Facility's Phone:

18c. Signature of Alternate Facility (or Generator)
Month Day Year

19. Hazardous Waste Report Management Method Codes (i.e., codes for hazardous waste treatment, disposal, and recycling systems)
1. H135 H134 2. 3. 4.

20. Designated Facility Owner or Operator: Certification of receipt of hazardous materials covered by the manifest except as noted in Item 18a
Printed/Typed Name: Vicki Hebert
Signature
Month 6 Day 23 Year 09

GENERATOR / INT'L / TRANSPORTER / DESIGNATED FACILITY

EPA Form 8700-22 (Rev. 3-05) Previous editions are obsolete. **TRANSPORTER'S COPY**

EPAPA010000216

CES Environmental Services, Inc.

4904 Griggs Road
Houston, TX 77021
Tel. (713) 676-1460
Fax. (713) 676-1676

Transportation Work Ticket

Folder ID : KMTEX (KMTEX - Port Arthur - TX) Methanol Wastewater

Date : 6/22/2009 **Manifest # :** 005592121

Client : KMTEX **Ticket :** 87974

Phone : 4099654200 **Consignee :** Newpark Environmental Services, LLC

Transporter : CES Environmental (Port Arthur)

Signature **Signature**

Leave CES Yard :		**Arrive At Destination**	12:00
Arrive At Customer :	10:15	**Begin Unloading :**	
Begin Loading :	10:33	**Finish Unloading :**	
Finish Loading :		**Leave Destination :**	12:45
Leave Customer :	11:15	**Arrive At CES Yard :**	

Customer PO #:

Total Hours:

CES Unload: ☐

Gross Weight :	76,320	**Ending Odometer :**	~~440835~~ 440835
Tare Weight :	32,680	**Begining Odometer :**	440759
Net Weight :	43,640	**Total Miles :**	76

Driver : Brown, Leroy **Tractor # :** 285 **Tote # :**

Signature : **Trailer # :** 227 **Box # :**

Job Comments/Equipment :

White (CES Office) Yellow (CES Office / Billing) Pink (CES Office / IFTA) Golden Rod (Customer)

DATE 6/22/09 NO. 53009

KMTEX
P.O. BOX 1421
2450 S. GULFWAY DRIVE
PORT ARTHUR, TEXAS 77640

ID 227

GROSS 32680 lb INBOUND

06/22/2009 10:23AM

ID 227

GROSS 76320 lb
TARE 32680 lb RECALLED
NET 43640 lb

06/22/2009 11:11AM

DRIVER ON ☐ OFF ☑

WEIGHED BY

Please print or type. (Form designed for use on elite (12-pitch) typewriter.) Form Approved. OMB No. 2050-0039

UNIFORM HAZARDOUS WASTE MANIFEST

1. Generator ID Number: TXD988076295
2. Page 1 of 1
3. Emergency Response Phone: (409) 985-4200
4. Manifest Tracking Number: 005592120 JJK

5. Generator's Name and Mailing Address
KMTEX
PO Box 1421
Port Arthur, TX 77640
State ID: 23491
Generator's Phone: (409) 985-4200

Generator's Site Address (if different than mailing address)
KMTEX
2450 South Gulfway Drive
Port Arthur, TX 77640
(409) 985-4200

6. Transporter 1 Company Name: CES Environmental Services, Inc.
State ID 30900
U.S. EPA ID Number: TXD008950461

7. Transporter 2 Company Name
U.S. EPA ID Number

8. Designated Facility Name and Site Address
Newpark Environmental Services, LLC
26400 Wilber Rd
Winnie TX, 77665
State ID 39098
Facility's Phone: (409) 794-3119
U.S. EPA ID Number: N/A

9a. HM	9b. U.S. DOT Description (including Proper Shipping Name, Hazard Class, ID Number, and Packing Group (if any))	10. Containers No.	10. Containers Type	11. Total Quantity	12. Unit Wt./Vol.	13. Waste Codes
	1. ~~Non RCRA/Non DOT regulated wastewater~~ Waste flammable liquids, n.o.s. (wastewater containing methanol) 3, UN1993, PG I	1	TT	39140	P	~~[illegible]~~ D001 D019
	2.					
	3.					
	4.					

14. Special Handling Instructions and Additional Information
CES Job # - 36940
Folder ID : KMTEX (KMTEX - Port Arthur - TX)
Methanol Wastewater
1) 0407050616H 2) 123491 6) 32690 8) 32693 4) 5741

15. **GENERATOR'S/OFFEROR'S CERTIFICATION:** I hereby declare that the contents of this consignment are fully and accurately described above by the proper shipping name, and are classified, packaged, marked and labeled/placarded, and are in all respects in proper condition for transport according to applicable international and national governmental regulations. If export shipment and I am the Primary Exporter, I certify that the contents of this consignment conform to the terms of the attached EPA Acknowledgment of Consent.
I certify that the waste minimization statement identified in 40 CFR 262.27(a) (if I am a large quantity generator) or (b) (if I am a small quantity generator) is true.

Generator's/Offeror's Printed/Typed Name: R Jamison
Signature
Month Day Year: 11 05 21

16. International Shipments ☐ Import to U.S. ☐ Export from U.S. Port of entry/exit:
Transporter signature (for exports only): Date leaving U.S.:

17. Transporter Acknowledgment of Receipt of Materials
Transporter 1 Printed/Typed Name: Kelly Bacon
Signature
Month Day Year: 6 22 09
Transporter 2 Printed/Typed Name
Signature
Month Day Year

18. Discrepancy
18a. Discrepancy Indication Space ☐ Quantity ☐ Type ☐ Residue ☐ Partial Rejection ☐ Full Rejection
Manifest Reference Number:

18b. Alternate Facility (or Generator)
U.S. EPA ID Number
Facility's Phone:

18c. Signature of Alternate Facility (or Generator)
Month Day Year

19. Hazardous Waste Report Management Method Codes (i.e., codes for hazardous waste treatment, disposal, and recycling systems)
1. H135 H134 2. 3. 4.

20. Designated Facility Owner or Operator: Certification of receipt of hazardous materials covered by the manifest except as noted in Item 18a
Printed/Typed Name: Vicki Hoffman
Signature
Month Day Year: 6 22 09

GENERATOR | INT'L | TRANSPORTER | DESIGNATED FACILITY

EPA Form 8700-22 (Rev. 3-05) Previous editions are obsolete.

TRANSPORTER'S COPY

EPAPA010000219

CES Environmental Services, Inc.

4904 Griggs Road
Houston, TX 77021
Tel. (713) 676-1460
Fax. (713) 676-1676

Transportation Work Ticket

Folder ID : KMTEX (KMTEX - Port Arthur - TX) Methanol Wastewater

Date : 6/22/2009 **Manifest # :** 005592120JR

Client : KMTEX **Ticket :** 87973

Phone : 4099854200 **Consignee :** Newpark Environmental Services, LLC

Transporter : CES Environmental (Port Arthur)

Signature [illegible] **Signature** [illegible]

Leave CES Yard :	6:55	**Arrive At Destination**	9:00
Arrive At Customer :	7:00	**Begin Unloading :**	
Begin Loading :	7:10	**Finish Unloading :**	
Finish Loading :	7:45	**Leave Destination :**	9:30
Leave Customer :	8:15	**Arrive At CES Yard :**	8

Customer PO #: [illegible] **Total Hours:** [illegible] **CES Unload:** ☐

Gross Weight :	71,920	**Ending Odometer :**	440759
Tare Weight :	32,780	**Begining Odometer :**	440683
Net Weight :	39,140	**Total Miles :**	76

Driver : Brown, Leroy **Tractor # :** 285 **Tote # :**

Signature : [illegible] **Trailer # :** 227 **Box # :**

Job Comments/Equipment :

White (CES Office) Yellow (CES Office / Billing) Pink (CES Office / IFTA) Golden Rod (Customer)

DATE 6-22-09 NO. 53001

KMTEX
P.O. BOX 1421
2450 S. GULFWAY DRIVE
PORT ARTHUR, TEXAS 77640

ID 227

GROSS 32780 lb INBOUND

06/22/2009 07:00AM

ID 227

GROSS 71920 lb
TARE 32780 lb RECALLED
NET 39140 lb

06/22/2009 07:59AM

DRIVER ON ☑ OFF ☐

WEIGHED BY J. Hung

Please print or type. (Form designed for use on elite (12-pitch) typewriter.) Form Approved. OMB No. 2050-0039

UNIFORM HAZARDOUS WASTE MANIFEST

1. Generator ID Number: TXR000079307
2. Page 1 of 1
3. Emergency Response Phone
4. Manifest Tracking Number: 005593207 JJK

5. Generator's Name and Mailing Address
CES Environmental Services - Port Arthur
4904 Griggs Road
Houston, TX 77021
State ID: 88585
Generator's Phone:

Generator's Site Address (if different than mailing address)
CES Environmental Services - Port Arthur
2420 Gulfway Drive
Port Arthur, TX 77640

6. Transporter 1 Company Name: CES Environmental Services, Inc. State ID 30900
U.S. EPA ID Number: TXD008950461

7. Transporter 2 Company Name
U.S. EPA ID Number

8. Designated Facility Name and Site Address
Newpark Environmental Services, LLC
26400 Wilber Rd
Winnie TX, 77665
State ID 39098
Facility's Phone: (409) 794-3119
U.S. EPA ID Number: N/A

9a. HM	9b. U.S. DOT Description (including Proper Shipping Name, Hazard Class, ID Number, and Packing Group (if any))	10. Containers No.	10. Containers Type	11. Total Quantity	12. Unit Wt./Vol.	13. Waste Codes
	1. Non-RCRA/Non DOT regulated wastewater	1	TT	5000	G	00011131
	2.					
	3.					
	4.					

14. Special Handling Instructions and Additional Information
Folder ID : CES Enviornmental (CES - Port Arthur)
Class 1, Non-hazardous Wastewater
PACES SAMPLE ID # _____ - _____ CES Job # - 88036
1) 0926091180BH 2) 3) 4)

15. **GENERATOR'S/OFFEROR'S CERTIFICATION:** I hereby declare that the contents of this consignment are fully and accurately described above by the proper shipping name, and are classified, packaged, marked and labeled/placarded, and are in all respects in proper condition for transport according to applicable international and national governmental regulations. If export shipment and I am the Primary Exporter, I certify that the contents of this consignment conform to the terms of the attached EPA Acknowledgment of Consent.
I certify that the waste minimization statement identified in 40 CFR 262.27(a) (if I am a large quantity generator) or (b) (if I am a small quantity generator) is true.

Generator's/Offeror's Printed/Typed Name: Ro Cumberlan
Signature
Month 6 Day 22 Year 09

16. International Shipments ☐ Import to U.S. ☐ Export from U.S. Port of entry/exit:
Transporter signature (for exports only): Date leaving U.S.:

17. Transporter Acknowledgment of Receipt of Materials
Transporter 1 Printed/Typed Name: Kevin Wilson
Signature
Month 6 Day 22 Year 09
Transporter 2 Printed/Typed Name
Signature
Month Day Year

18. Discrepancy
18a. Discrepancy Indication Space ☐ Quantity ☐ Type ☐ Residue ☐ Partial Rejection ☑ Full Rejection
Manifest Reference Number:

18b. Alternate Facility (or Generator) CES PA 2420 Gulfway Dr Port Arthur TX 77640
U.S. EPA ID Number: 88585
Facility's Phone:

18c. Signature of Alternate Facility (or Generator)
Month Day Year

19. Hazardous Waste Report Management Method Codes (i.e., codes for hazardous waste treatment, disposal, and recycling systems)
1. H134 2. 3. 4.

20. Designated Facility Owner or Operator: Certification of receipt of hazardous materials covered by the manifest except as noted in Item 18a
Printed/Typed Name: Vicki Hoffman
Signature
Month 6 Day 22 Year 09

GENERATOR — INT'L — TRANSPORTER — DESIGNATED FACILITY

EPA Form 8700-22 (Rev. 3-06) Previous editions are obsolete.

DESIGNATED FACILITY TO DESTINATION STATE (IF REQUIRED)

EPAPA010000222

Please print or type. (Form designed for use on elite (12-pitch) typewriter.) Form Approved. OMB No. 2050-0039

UNIFORM HAZARDOUS WASTE MANIFEST

1. Generator ID Number: TXR000079307
2. Page 1 of 1
3. Emergency Response Phone
4. Manifest Tracking Number: 005593207 JJK

5. Generator's Name and Mailing Address
CES Environmental Services - Port Arthur
4904 Griggs Road
Houston, TX 77021
Generator's Phone:
State ID: 88585

Generator's Site Address (if different than mailing address)
CES Environmental Services - Port Arthur
2420 Gulfway Drive
Port Arthur, TX 77640

6. Transporter 1 Company Name: CES Environmental Services, Inc. — State ID 30900 — U.S. EPA ID Number: TXD008950461

7. Transporter 2 Company Name — U.S. EPA ID Number:

8. Designated Facility Name and Site Address
Newpark Environmental Services, LLC
26400 Wilber Rd
Winnie TX, 77665
Facility's Phone: (409) 794-3119
State ID 39098
U.S. EPA ID Number: N/A

9a. HM	9b. U.S. DOT Description (including Proper Shipping Name, Hazard Class, ID Number, and Packing Group (if any))	10. Containers No.	10. Containers Type	11. Total Quantity	12. Unit Wt./Vol.	13. Waste Codes
	1. Non-RCRA/Non DOT regulated wastewater	1	TT	5000	G	00011131
	2. 1238 1248					
	3.					
	4.					

14. Special Handling Instructions and Additional Information
Folder ID : CES Enviornmental (CES - Port Arthur)
Class 1, Non-hazardous Wastewater
PACES SAMPLE ID # _____ - _____ CES Job # - 88036
1) 09260911808H 2) 3) 4)

15. **GENERATOR'S/OFFEROR'S CERTIFICATION:** I hereby declare that the contents of this consignment are fully and accurately described above by the proper shipping name, and are classified, packaged, marked and labeled/placarded, and are in all respects in proper condition for transport according to applicable international and national governmental regulations. If export shipment and I am the Primary Exporter, I certify that the contents of this consignment conform to the terms of the attached EPA Acknowledgment of Consent.
I certify that the waste minimization statement identified in 40 CFR 262.27(a) (if I am a large quantity generator) or (b) (if I am a small quantity generator) is true.

Generator's/Offeror's Printed/Typed Name: Ro Cumberlan — Signature: — Month 6 Day 22 Year 09

16. International Shipments ☐ Import to U.S. ☐ Export from U.S. Port of entry/exit:
Transporter signature (for exports only): Date leaving U.S.:

17. Transporter Acknowledgment of Receipt of Materials
Transporter 1 Printed/Typed Name: Kevin Wilson — Signature: — Month 6 Day 22 Year 09
Transporter 2 Printed/Typed Name — Signature — Month — Day — Year

18. Discrepancy
18a. Discrepancy Indication Space ☐ Quantity ☐ Type ☐ Residue ☐ Partial Rejection ☑ Full Rejection
Manifest Reference Number:

18b. Alternate Facility (or Generator) — U.S. EPA ID Number: 88585
CES PA
2420 Gulfway Dr
Port Arthur TX 77640
Facility's Phone:

18c. Signature of Alternate Facility (or Generator) — Month — Day — Year

19. Hazardous Waste Report Management Method Codes (i.e., codes for hazardous waste treatment, disposal, and recycling systems)
1. H134 2. 3. 4.

20. Designated Facility Owner or Operator: Certification of receipt of hazardous materials covered by the manifest except as noted in Item 18a
Printed/Typed Name: Vicki Spencer — Signature: — Month 6 Day 22 Year 09

GENERATOR — TRANSPORTER — DESIGNATED FACILITY — INT'L

EPA Form 8700-22 (Rev. 3-05) Previous editions are obsolete. **DESIGNATED FACILITY TO GENERATOR STATE (IF REQUIRED)**

EPAPA010000223

Please print or type. (Form designed for use on elite (12-pitch) typewriter.) Form Approved. OMB No. 2050-0039

UNIFORM HAZARDOUS WASTE MANIFEST

1. Generator ID Number: TXR000079307
2. Page 1 of: 1
3. Emergency Response Phone:
4. Manifest Tracking Number: 005593207 JJK

5. Generator's Name and Mailing Address
CES Environmental Services - Port Arthur
4904 Griggs Road
Houston, TX 77021
State ID: 88585
Generator's Phone:

Generator's Site Address (if different than mailing address)
CES Environmental Services - Port Arthur
2420 Gulfway Drive
Port Arthur, TX 77640

6. Transporter 1 Company Name: CES Environmental Services, Inc.
State ID 30900
U.S. EPA ID Number: TXD008950461

7. Transporter 2 Company Name:
U.S. EPA ID Number:

8. Designated Facility Name and Site Address
Newark Environmental Services, LLC
26400 Wilber Rd
Winnie TX, 77665
State ID 39098
Facility's Phone: (409) 794-3119
U.S. EPA ID Number: N/A

9a. HM	9b. U.S. DOT Description (including Proper Shipping Name, Hazard Class, ID Number, and Packing Group (if any))	10. Containers No.	10. Containers Type	11. Total Quantity	12. Unit Wt./Vol.	13. Waste Codes
	1. Non-RCRA/Non DOT regulated wastewater	1	TT	5000	G	00011131
	2.					
	3.					
	4.					

14. Special Handling Instructions and Additional Information
Folder ID : CES Environmental (CES - Port Arthur)
Class 1, Non-hazardous Wastewater
PACES SAMPLE ID # _____ - _____ CES Job # - 88036
1) 0926091180BH 2) 3) 4)

15. **GENERATOR'S/OFFEROR'S CERTIFICATION:** I hereby declare that the contents of this consignment are fully and accurately described above by the proper shipping name, and are classified, packaged, marked and labeled/placarded, and are in all respects in proper condition for transport according to applicable international and national governmental regulations. If export shipment and I am the Primary Exporter, I certify that the contents of this consignment conform to the terms of the attached EPA Acknowledgment of Consent.
I certify that the waste minimization statement identified in 40 CFR 262.27(a) (if I am a large quantity generator) or (b) (if I am a small quantity generator) is true.

Generator's/Offeror's Printed/Typed Name: Ro Cumberlan
Signature:
Month 6 Day 22 Year 09

16. International Shipments ☐ Import to U.S. ☐ Export from U.S. Port of entry/exit:
Transporter signature (for exports only): Date leaving U.S.:

17. Transporter Acknowledgment of Receipt of Materials
Transporter 1 Printed/Typed Name: Kevin Wilson
Signature:
Month 6 Day 22 Year 09
Transporter 2 Printed/Typed Name:
Signature:
Month Day Year

18. Discrepancy
18a. Discrepancy Indication Space ☐ Quantity ☐ Type ☐ Residue ☐ Partial Rejection ☑ Full Rejection
Manifest Reference Number:

18b. Alternate Facility (or Generator)
2420 Gulfway Dr
Port Arthur TX 77640
Facility's Phone:
U.S. EPA ID Number: 88585

18c. Signature of Alternate Facility (or Generator)
Month Day Year

19. Hazardous Waste Report Management Method Codes (i.e., codes for hazardous waste treatment, disposal, and recycling systems)
1. H134 2. 3. 4.

20. Designated Facility Owner or Operator: Certification of receipt of hazardous materials covered by the manifest except as noted in Item 18a
Printed/Typed Name: Vick Hoffauer
Signature:
Month 6 Day 22 Year 09

GENERATOR | INT'L | TRANSPORTER | DESIGNATED FACILITY

EPA Form 8700-22 (Rev. 3-05) Previous editions are obsolete.

DESIGNATED FACILITY TO GENERATOR

EPAPA010000224

Please print or type. (Form designed for use on elite (12-pitch) typewriter.) Form Approved. OMB No. 2050-0039

UNIFORM HAZARDOUS WASTE MANIFEST

1. Generator ID Number: TXR000079307
2. Page 1 of
3. Emergency Response Phone
4. Manifest Tracking Number: 005593207 JJK

5. Generator's Name and Mailing Address
CES Environmental Services - Port Arthur
4904 Griggs Road
Houston, TX 77021
State ID: 88585
Generator's Site Address (if different than mailing address)
CES Environmental Services - Port Arthur
2420 Guifway Drive
Port Arthur, TX 77640
Generator's Phone:

6. Transporter 1 Company Name: CES Environmental Services, Inc. State ID: 30900 U.S. EPA ID Number: TXD008950461

7. Transporter 2 Company Name U.S. EPA ID Number

8. Designated Facility Name and Site Address
Newpark Environmental Services LLC
25400 Wilber Rd
Winnie TX, 77665
State ID: 39090
Facility's Phone: (409) 794-3249
U.S. EPA ID Number: N/A

9a. HM	9b. U.S. DOT Description (including Proper Shipping Name, Hazard Class, ID Number, and Packing Group (if any))	10. Containers No.	Type	11. Total Quantity	12. Unit Wt./Vol.	13. Waste Codes
	1. Non-RCRA/Non DOT regulated wastewater	1	TT	5000	G	0001131
	2.					
	3.					
	4.					

14. Special Handling Instructions and Additional Information
Folder ID: CES Environmental (CES - Port Arthur)
Class 1, Non-hazardous Wastewater
PACES SAMPLE ID # _____ CES Job # - 88036
1) 0926091180BH 2) 3) 4)

15. **GENERATOR'S/OFFEROR'S CERTIFICATION:** I hereby declare that the contents of this consignment are fully and accurately described above by the proper shipping name, and are classified, packaged, marked and labeled/placarded, and are in all respects in proper condition for transport according to applicable international and national governmental regulations. If export shipment and I am the Primary Exporter, I certify that the contents of this consignment conform to the terms of the attached EPA Acknowledgment of Consent.
I certify that the waste minimization statement identified in 40 CFR 262.27(a) (if I am a large quantity generator) or (b) (if I am a small quantity generator) is true.

Generator's/Offeror's Printed/Typed Name: Ro Cumberlin Signature: Month 6 Day 22 Year 09

16. International Shipments ☐ Import to U.S. ☐ Export from U.S. Port of entry/exit:
Transporter signature (for exports only): Date leaving U.S.:

17. Transporter Acknowledgment of Receipt of Materials
Transporter 1 Printed/Typed Name: Kevin W. Loa Signature: Month 6 Day 22 Year 09
Transporter 2 Printed/Typed Name Signature Month Day Year

18. Discrepancy
18a. Discrepancy Indication Space ☐ Quantity ☐ Type ☐ Residue ☐ Partial Rejection ☑ Full Rejection
Manifest Reference Number:

18b. Alternate Facility (or Generator) U.S. EPA ID Number: 88585
2420 Guifway Dr
Port Arthur TX 77640
Facility's Phone:

18c. Signature of Alternate Facility (or Generator) Month Day Year

19. Hazardous Waste Report Management Method Codes (i.e., codes for hazardous waste treatment, disposal, and recycling systems)
1. H134 2. 3. 4.

20. Designated Facility Owner or Operator: Certification of receipt of hazardous materials covered by the manifest except as noted in Item 18a
Printed/Typed Name: Vick Hoffauer Signature: Month 6 Day 22 Year 09

GENERATOR | INT'L | TRANSPORTER | DESIGNATED FACILITY

EPA Form 8700-22 (Rev. 3-05) Previous editions are obsolete. **TRANSPORTER'S COPY**

EPAPA010000225

Please print or type. (Form designed for use on elite (12-pitch) typewriter.) Form Approved. OMB No. 2050-0039

UNIFORM HAZARDOUS WASTE MANIFEST

1. Generator ID Number: TXR000070307
2. Page 1 of
3. Emergency Response Phone
4. Manifest Tracking Number: 005593207 JJK

5. Generator's Name and Mailing Address
CES Environmental Services - Port Arthur
4804 Griggs Road
Houston, TX 77021
State ID: 88585
Generator's Phone:

Generator's Site Address (if different than mailing address)
CES Environmental Services - Port Arthur
2420 Gulfway Drive
Port Arthur, TX 77640

6. Transporter 1 Company Name: CES Environmental Services, Inc. State ID: 30930
U.S. EPA ID Number: TXD000805064

7. Transporter 2 Company Name
U.S. EPA ID Number

8. Designated Facility Name and Site Address
Newpark Environmental Services LLC
25400 Weiler Rd
Winnie TX, 77665
State ID: 30030
Facility's Phone: (409) 724-2118
U.S. EPA ID Number: N/A

9a. HM	9b. U.S. DOT Description (including Proper Shipping Name, Hazard Class, ID Number, and Packing Group (if any))	10. Containers No.	10. Containers Type	11. Total Quantity	12. Unit Wt./Vol.	13. Waste Codes
	1. Non-RCRA/Non DOT regulated wastewater	1	TT	500	G	091138
	2.					
	3.					
	4.					

14. Special Handling Instructions and Additional Information
Profile ID: CES Environmental (CES - Port Arthur)
Class 1, Non-hazardous Wastewater
PACPS SPECIAL ID # _____ CES Job # - 88038
1) 0920091150BH 2) 3) 4)

15. **GENERATOR'S/OFFEROR'S CERTIFICATION:** I hereby declare that the contents of this consignment are fully and accurately described above by the proper shipping name, and are classified, packaged, marked and labeled/placarded, and are in all respects in proper condition for transport according to applicable international and national governmental regulations. If export shipment and I am the Primary Exporter, I certify that the contents of this consignment conform to the terms of the attached EPA Acknowledgment of Consent.
I certify that the waste minimization statement identified in 40 CFR 262.27(a) (if I am a large quantity generator) or (b) (if I am a small quantity generator) is true.

Generator's/Offeror's Printed/Typed Name: Bo Cunningham
Signature
Month 6 Day 22 Year 09

16. International Shipments ☐ Import to U.S. ☐ Export from U.S. Port of entry/exit:
Transporter signature (for exports only): Date leaving U.S.:

17. Transporter Acknowledgment of Receipt of Materials
Transporter 1 Printed/Typed Name: Kevin W. Lson
Signature
Month 6 Day 22 Year 09
Transporter 2 Printed/Typed Name
Signature
Month Day Year

18. Discrepancy
18a. Discrepancy Indication Space ☐ Quantity ☐ Type ☐ Residue ☐ Partial Rejection ☑ Full Rejection
Manifest Reference Number:

18b. Alternate Facility (or Generator)
2420 Gulfway Dr
Port Arthur TX 77640
U.S. EPA ID Number: 88585
Facility's Phone:

18c. Signature of Alternate Facility (or Generator)
Month Day Year

19. Hazardous Waste Report Management Method Codes (i.e., codes for hazardous waste treatment, disposal, and recycling systems)
1. H134 2. 3. 4.

20. Designated Facility Owner or Operator: Certification of receipt of hazardous materials covered by the manifest except as noted in Item 18a
Printed/Typed Name: Vice President
Signature
Month 6 Day 22 Year 09

GENERATOR | INT'L | TRANSPORTER | DESIGNATED FACILITY

EPA Form 8700-22 (Rev. 3-05) Previous editions are obsolete.

GENERATOR'S INITIAL COPY

EPAPA010000226

CES Environmental Services, Inc.

4904 Griggs Road
Houston, TX 77021
Tel. (713) 676-1460
Fax. (713) 676-1879

Transportation Work Ticket

Folder ID : CES Enviornmental (CES - Port Arthur) Class 1, Non-hazardous Wastewater

Date : 6/22/2009 **Manifest # :**

Client : CES Environmental Services - Port Arthur **Ticket :** 89036

Phone : **Consignee :** Newpark Environmental Services, LLC

Transporter : CES Environmental Services, Inc.

Signature **Signature**

Leave CES Yard :	1000	**Arrive At Destination**	1200
Arrive At Customer :		**Begin Unloading :**	
Begin Loading :		**Finish Unloading :**	
Finish Loading :		**Leave Destination :**	1215
Leave Customer :	1100	**Arrive At CES Yard :**	1415

Customer PO #:

Total Hours:

CES Unload: ☐

Gross Weight :		**Ending Odometer :**	43502
Tare Weight :		**Begining Odometer :**	43497
Net Weight :		**Total Miles :**	96

Driver : Wilson, Kevin **Tractor # :** 2004 **Tote # :**

Signature : **Trailer # :** 420 **Box # :**

Job Comments/Equipment :

White (CES Office) Yellow (CES Office / Billing) Pink (CES Office / IFTA) Golden Rod (Customer)

METTLER TOLEDO

AUTHORIZED SIGNATURE

Newpark Env. Services LC CN 58968
26400 WILBER RD
WINNE TX 77665

ID	3	GROSS	71080	lb (1)
VEHICLE	2225	TARE	0	
TIME	1:22 PM	NET	71080	
DATE	06 22 09			

Please print or type. (Form designed for use on elite (12-pitch) typewriter.) Form Approved. OMB No. 2050-0039

UNIFORM HAZARDOUS WASTE MANIFEST

1. Generator ID Number: TXR000070000
2. Page 1 of
3. Emergency Response Phone
4. Manifest Tracking Number: **005593208 JJK**

5. Generator's Name and Mailing Address
CES Environmental Services - Port Arthur State ID: [illegible]
4828 Griggs Road
Houston, TX 77021
Generator's Phone:

Generator's Site Address (if different than mailing address)
CES Environmental Services - Port Arthur
2928 Gulfway Drive
Port Arthur, TX 77640

6. Transporter 1 Company Name: CES Environmental Services, Inc State ID: [illegible] U.S. EPA ID Number: TXD000850461

7. Transporter 2 Company Name U.S. EPA ID Number

8. Designated Facility Name and Site Address
Newcastle Environmental Services, LLC
20400 Wilber Rd
Winnie TX, 77665
Facility's Phone: (409) 724-2119
State ID: [illegible]
U.S. EPA ID Number: N/A

9a. HM	9b. U.S. DOT Description (including Proper Shipping Name, Hazard Class, ID Number, and Packing Group (if any))	10. Containers No.	10. Containers Type	11. Total Quantity	12. Unit Wt./Vol.	13. Waste Codes
	1. Non-RCRA/Non-DOT regulated wastewater	1	TT	5000	G	[illegible]
	2.					
	3.					
	4.					

14. Special Handling Instructions and Additional Information
Profile ID: CES Environmental (CES - Port Arthur) PACES SAMPLE ID #: CES Job # - [illegible]
Class 1, Non-hazardous Wastewater
1) [illegible] 2) D86505 6/30/00 3) [illegible] 4) 5916.0

15. **GENERATOR'S/OFFEROR'S CERTIFICATION:** I hereby declare that the contents of this consignment are fully and accurately described above by the proper shipping name, and are classified, packaged, marked and labeled/placarded, and are in all respects in proper condition for transport according to applicable international and national governmental regulations. If export shipment and I am the Primary Exporter, I certify that the contents of this consignment conform to the terms of the attached EPA Acknowledgment of Consent.
I certify that the waste minimization statement identified in 40 CFR 262.27(a) (if I am a large quantity generator) or (b) (if I am a small quantity generator) is true.

Generator's/Offeror's Printed/Typed Name: [illegible] Signature: [illegible] Month 6 Day 23 Year 07

GENERATOR

INT'L

16. International Shipments ☐ Import to U.S. ☐ Export from U.S. Port of entry/exit:
Transporter signature (for exports only): Date leaving U.S.:

TRANSPORTER

17. Transporter Acknowledgment of Receipt of Materials
Transporter 1 Printed/Typed Name: Kevin Wilson Signature: [illegible] Month 6 Day 23 Year 07
Transporter 2 Printed/Typed Name Signature Month Day Year

DESIGNATED FACILITY

18. Discrepancy
18a. Discrepancy Indication Space ☐ Quantity ☐ Type ☐ Residue ☐ Partial Rejection ☐ Full Rejection
Manifest Reference Number:
18b. Alternate Facility (or Generator) U.S. EPA ID Number
Facility's Phone:
18c. Signature of Alternate Facility (or Generator) Month Day Year

19. Hazardous Waste Report Management Method Codes (i.e., codes for hazardous waste treatment, disposal, and recycling systems)
1. H131 2. 3. 4.

20. Designated Facility Owner or Operator: Certification of receipt of hazardous materials covered by the manifest except as noted in Item 18a
Printed/Typed Name: Vick Hollaway Signature: [illegible] Month 6 Day 23 Year 07

EPA Form 8700-22 (Rev. 3-05) Previous editions are obsolete. **GENERATOR'S INITIAL COPY**

EPAPA010000229

CES Environmental Services, Inc.

4904 Griggs Road
Houston, TX 77021
Tel. (713) 676-1460
Fax. (713) 676-1676

Transportation Work Ticket

Folder ID : CES Enviommental (CES - Port Arthur) Class 1, Non-hazardous Wastewater

Date : 6/23/2009 **Manifest # :**

Client : CES Environmental Services - Port Arthur **Ticket :** 88089

Phone : **Consignee :** Newpark Environmental Services, LLC

Transporter : CES Environmental Services, Inc.

Signature **Signature**

Leave CES Yard :	1230	**Arrive At Destination**	1430
Arrive At Customer :		**Begin Unloading :**	
Begin Loading :		**Finish Unloading :**	
Finish Loading :		**Leave Destination :**	1510
Leave Customer :	1330	**Arrive At CES Yard :**	1600

Customer PO #:

Total Hours:

CES Unload: ☐

Gross Weight :		**Ending Odometer :**	41309
Tare Weight :		**Beginning Odometer :**	43521
Net Weight :		**Total Miles :**	88

Driver : Wilson, Kevin **Tractor # :** 2004 **Tote # :**

Signature : **Trailer # :** 269 **Box # :**

Job Comments/Equipment :

White (CES Office) Yellow (CES Office / Billing) Pink (CES Office / IFTA) Golden Rod (Customer)

METTLER TOLEDO

AUTHORIZED SIGNATURE

Newpark Env. Services LC CN 59017
26400 WILBER RD
WINNE TX 77665

ID	2	GROSS	77820	lb (1)
VEHICLE	2334	TARE	32140	lb
TIME	3:32 PM	NET	45680	lb
DATE	06 23 09			

EPAPA010000231

Please print or type. (Form designed for use on elite (12-pitch) typewriter.) Form Approved. OMB No. 2050-0039

UNIFORM HAZARDOUS WASTE MANIFEST

1. Generator ID Number: TXR000079307
2. Page 1 of 1
3. Emergency Response Phone
4. Manifest Tracking Number: 005593210 JJK

5. Generator's Name and Mailing Address
CES Environmental Services - Port Arthur
4904 Griggs Road
Houston, TX 77021
Generator's Phone:
State ID: 88585

Generator's Site Address (if different than mailing address)
CES Environmental Services - Port Arthur
2420 Gulfway Drive
Port Arthur, TX 77640

6. Transporter 1 Company Name: CES Environmental Services, Inc. State ID 30900
U.S. EPA ID Number: TXD008950461

7. Transporter 2 Company Name
U.S. EPA ID Number

8. Designated Facility Name and Site Address
Newpark Environmental Services, LLC
26400 Wilber Rd
Winnie TX, 77665
Facility's Phone: (409) 794-3119
State ID 39098
U.S. EPA ID Number: N/A

9a. HM	9b. U.S. DOT Description (including Proper Shipping Name, Hazard Class, ID Number, and Packing Group (if any))	10. Containers No.	10. Containers Type	11. Total Quantity	12. Unit Wt./Vol.	13. Waste Codes
	1. Non-RCRA/Non DOT regulated wastewater	1	TT	5000	G	00011131
	2.					
	3.					
	4.					

14. Special Handling Instructions and Additional Information
Folder ID : CES Enviornmental (CES - Port Arthur)
Class 1, Non-hazardous Wastewater
PACES SAMPLE ID # _____ - _____ CES Job # - 88115
1) 0926091180BH 2) 1)88585 6)30900 8)39098 4)

15. **GENERATOR'S/OFFEROR'S CERTIFICATION:** I hereby declare that the contents of this consignment are fully and accurately described above by the proper shipping name, and are classified, packaged, marked and labeled/placarded, and are in all respects in proper condition for transport according to applicable international and national governmental regulations. If export shipment and I am the Primary Exporter, I certify that the contents of this consignment conform to the terms of the attached EPA Acknowledgment of Consent.
I certify that the waste minimization statement identified in 40 CFR 262.27(a) (if I am a large quantity generator) or (b) (if I am a small quantity generator) is true.

Generator's/Offeror's Printed/Typed Name: BO
Signature: BO
Month 6 Day 24 Year 09

16. International Shipments ☐ Import to U.S. ☐ Export from U.S. Port of entry/exit:
Transporter signature (for exports only): Date leaving U.S.:

17. Transporter Acknowledgment of Receipt of Materials
Transporter 1 Printed/Typed Name: Chris Saylor
Signature:
Month 6 Day 24 Year 09
Transporter 2 Printed/Typed Name
Signature
Month Day Year

18. Discrepancy
18a. Discrepancy Indication Space ☐ Quantity ☐ Type ☐ Residue ☐ Partial Rejection ☑ Full Rejection
Odor
Manifest Reference Number:

18b. Alternate Facility (or Generator) CES
2420 Gulfway Drive
Port Arthur TX 77640
Facility's Phone:
U.S. EPA ID Number: 88585

18c. Signature of Alternate Facility (or Generator)
Month Day Year

19. Hazardous Waste Report Management Method Codes (i.e., codes for hazardous waste treatment, disposal, and recycling systems)
1. H134 2. 3. 4.

20. Designated Facility Owner or Operator: Certification of receipt of hazardous materials covered by the manifest except as noted in Item 18a
Printed/Typed Name: Vicki Hoffpauer
Signature:
Month 6 Day 24 Year 09

GENERATOR | INT'L | TRANSPORTER | DESIGNATED FACILITY

EPA Form 8700-22 (Rev. 3-05) Previous editions are obsolete.

DESIGNATED FACILITY TO DESTINATION STATE (IF REQUIRED)

EPAPA010000232

Please print or type. (Form designed for use on elite (12-pitch) typewriter.) Form Approved. OMB No. 2050-0039

UNIFORM HAZARDOUS WASTE MANIFEST

1. Generator ID Number: TXR000079307
2. Page 1 of 1
3. Emergency Response Phone
4. Manifest Tracking Number: 005593210 JJK

GENERATOR

5. Generator's Name and Mailing Address
CES Environmental Services - Port Arthur
4904 Griggs Road
Houston, TX 77021
State ID: 88585
Generator's Phone:

Generator's Site Address (if different than mailing address)
CES Environmental Services - Port Arthur
2420 Gulfway Drive
Port Arthur, TX 77640

6. Transporter 1 Company Name: CES Environmental Services, Inc. State ID 30900
U.S. EPA ID Number: TXD008950461

7. Transporter 2 Company Name
U.S. EPA ID Number

8. Designated Facility Name and Site Address
Newpark Environmental Services, LLC
26400 Wilber Rd
Winnie TX, 77665
State ID 39098
Facility's Phone: (409) 794-3119
U.S. EPA ID Number: N/A

9a. HM	9b. U.S. DOT Description (including Proper Shipping Name, Hazard Class, ID Number, and Packing Group (if any))	10. Containers No.	10. Containers Type	11. Total Quantity	12. Unit Wt./Vol.	13. Waste Codes
	1. Non-RCRA/Non DOT regulated wastewater	1	TT	5000	G	D001
	2.					
	3.					
	4.					

14. Special Handling Instructions and Additional Information
Folder ID : CES Environmental (CES - Port Arthur)
Class 1, Non-hazardous Wastewater
PACES SAMPLE ID # _____ - _____ CES Job # - 68115
1) 0926091180BH 2) 1) 88585 6) 30900 8) 39098 4)

15. **GENERATOR'S/OFFEROR'S CERTIFICATION:** I hereby declare that the contents of this consignment are fully and accurately described above by the proper shipping name, and are classified, packaged, marked and labeled/placarded, and are in all respects in proper condition for transport according to applicable international and national governmental regulations. If export shipment and I am the Primary Exporter, I certify that the contents of this consignment conform to the terms of the attached EPA Acknowledgment of Consent.
I certify that the waste minimization statement identified in 40 CFR 262.27(a) (if I am a large quantity generator) or (b) (if I am a small quantity generator) is true.

Generator's/Offeror's Printed/Typed Name: [signature] Signature: [signature] Month 6 Day 24 Year 09

INT'L

16. International Shipments ☐ Import to U.S. ☐ Export from U.S. Port of entry/exit:
Transporter signature (for exports only): Date leaving U.S.:

TRANSPORTER

17. Transporter Acknowledgment of Receipt of Materials
Transporter 1 Printed/Typed Name: Chris Sailor Signature: [signature] Month 6 Day 24 Year 09
Transporter 2 Printed/Typed Name: Signature: Month Day Year

DESIGNATED FACILITY

18. Discrepancy
18a. Discrepancy Indication Space ☐ Quantity ☐ Type ☐ Residue ☐ Partial Rejection ☑ Full Rejection
Odor
Manifest Reference Number:
18b. Alternate Facility (or Generator) CES Port Arthur
2420 Gulfway Drive
Port Arthur TX 77640
Facility's Phone:
U.S. EPA ID Number: 88585
18c. Signature of Alternate Facility (or Generator) Month Day Year

19. Hazardous Waste Report Management Method Codes (i.e., codes for hazardous waste treatment, disposal, and recycling systems)
1. H134 2. 3. 4.

20. Designated Facility Owner or Operator: Certification of receipt of hazardous materials covered by the manifest except as noted in Item 18a
Printed/Typed Name: Vicki Hoppauer Signature: [signature] Month 6 Day 24 Year 09

EPA Form 8700-22 (Rev. 3-05) Previous editions are obsolete. **DESIGNATED FACILITY TO GENERATOR STATE (IF REQUIRED)**

Please print or type. (Form designed for use on elite (12-pitch) typewriter.) Form Approved. OMB No. 2050-0039

UNIFORM HAZARDOUS WASTE MANIFEST

1. Generator ID Number: TXR000070307
2. Page 1 of
3. Emergency Response Phone
4. Manifest Tracking Number: 005593210 JJK

5. Generator's Name and Mailing Address
CES Environmental Services - Port Arthur State ID: 88585
4904 Griggs Road
Houston, TX 77021
Generator's Phone:

Generator's Site Address (if different than mailing address)
CES Environmental Services - Port Arthur
3420 Gulfway Drive
Port Arthur, TX 77640

6. Transporter 1 Company Name
CES Environmental Services, Inc. State ID: 30900
U.S. EPA ID Number: TXD008050461

7. Transporter 2 Company Name
U.S. EPA ID Number:

8. Designated Facility Name and Site Address
Newpark Environmental Services, LLC State ID: 39098
26400 Wilber Rd
Winnie TX, 77665
Facility's Phone: (409) 724-2119
U.S. EPA ID Number: N/A

9a. HM	9b. U.S. DOT Description (including Proper Shipping Name, Hazard Class, ID Number, and Packing Group (if any))	10. Containers No.	10. Containers Type	11. Total Quantity	12. Unit Wt./Vol.	13. Waste Codes
	1. Non-RCRA/Non DOT regulated wastewater	1	TT	[illegible]	G	0001139
	2.					
	3.					
	4.					

14. Special Handling Instructions and Additional Information
Folder ID : CES Environmental (CES - Port Arthur) PACES SAMPLE ID # _____ CES Job # - 88585
Class 1, Non-Hazardous Wastewater
1) 0926091180BH 2) 1)88585 6)30900 8)29695 4)

15. **GENERATOR'S/OFFEROR'S CERTIFICATION:** I hereby declare that the contents of this consignment are fully and accurately described above by the proper shipping name, and are classified, packaged, marked and labeled/placarded, and are in all respects in proper condition for transport according to applicable international and national governmental regulations. If export shipment and I am the Primary Exporter, I certify that the contents of this consignment conform to the terms of the attached EPA Acknowledgment of Consent.
I certify that the waste minimization statement identified in 40 CFR 262.27(a) (if I am a large quantity generator) or (b) (if I am a small quantity generator) is true.

Generator's/Offeror's Printed/Typed Name: [illegible] Signature: [illegible] Month 6 Day 24 Year 09

INT'L

16. International Shipments ☐ Import to U.S. ☐ Export from U.S. Port of entry/exit:
Transporter signature (for exports only): Date leaving U.S.:

TRANSPORTER

17. Transporter Acknowledgment of Receipt of Materials
Transporter 1 Printed/Typed Name: Chris Taylor Signature: [illegible] Month 6 Day 24 Year 09
Transporter 2 Printed/Typed Name: Signature: Month Day Year

DESIGNATED FACILITY

18. Discrepancy
18a. Discrepancy Indication Space ☐ Quantity ☐ Type ☐ Residue ☐ Partial Rejection ☑ Full Rejection
Other
Manifest Reference Number:
18b. Alternate Facility (or Generator) CES
2420 Gulfway Drive
Port Arthur TX 77640
Facility's Phone:
U.S. EPA ID Number: 88585
18c. Signature of Alternate Facility (or Generator) Month Day Year

19. Hazardous Waste Report Management Method Codes (i.e., codes for hazardous waste treatment, disposal, and recycling systems)
1. H134 2. 3. 4.

20. Designated Facility Owner or Operator: Certification of receipt of hazardous materials covered by the manifest except as noted in Item 18a
Printed/Typed Name: Vicki Hoppauer Signature: [illegible] Month 6 Day 24 Year 09

EPA Form 8700-22 (Rev. 3-05) Previous editions are obsolete. **DESIGNATED FACILITY TO GENERATOR**

EPAPA010000234

Please print or type. (Form designed for use on elite (12-pitch) typewriter.) Form Approved. OMB No. 2050-0039

UNIFORM HAZARDOUS WASTE MANIFEST

1. Generator ID Number: TXR000070317
2. Page 1 of
3. Emergency Response Phone
4. Manifest Tracking Number: 005593210 JJK

GENERATOR

5. Generator's Name and Mailing Address: CES Environmental Services - Port Arthur, 3600 Griffin Road, Port Arthur, TX 77642
Generator's Site Address (if different than mailing address): CES Environmental Services - Port Arthur, 3600 Griffin Road, Port Arthur, TX 77642
Generator's Phone:

6. Transporter 1 Company Name: CES Environmental Services, Inc.
U.S. EPA ID Number: TXD000850051

7. Transporter 2 Company Name:
U.S. EPA ID Number:

8. Designated Facility Name and Site Address: Waste Management Services LLC, 2800 Weber Rd, Wharton, TX 77488
U.S. EPA ID Number:
Facility's Phone:

9a. HM	9b. U.S. DOT Description (including Proper Shipping Name, Hazard Class, ID Number, and Packing Group (if any))	10. Containers No.	10. Containers Type	11. Total Quantity	12. Unit Wt./Vol.	13. Waste Codes
	1. Non-PCB Non DOT regulated waste	1	TT	5000	G	D001
	2.					
	3.					
	4.					

14. Special Handling Instructions and Additional Information
Profile ID: CES Environmental (CES - Port Arthur)
Class 1 Nonhazardous Particulate
1) 0000011506H 2) 1186585 6) 20700 8) 29695

15. **GENERATOR'S/OFFEROR'S CERTIFICATION:** I hereby declare that the contents of this consignment are fully and accurately described above by the proper shipping name, and are classified, packaged, marked and labeled/placarded, and are in all respects in proper condition for transport according to applicable international and national governmental regulations. If export shipment and I am the Primary Exporter, I certify that the contents of this consignment conform to the terms of the attached EPA Acknowledgment of Consent.
I certify that the waste minimization statement identified in 40 CFR 262.27(a) (if I am a large quantity generator) or (b) (if I am a small quantity generator) is true.

Generator's/Offeror's Printed/Typed Name: [illegible] Signature: [illegible] Month 6 Day 24 Year 09

INT'L

16. International Shipments ☐ Import to U.S. ☐ Export from U.S. Port of entry/exit:
Transporter signature (for exports only): Date leaving U.S.:

TRANSPORTER

17. Transporter Acknowledgment of Receipt of Materials
Transporter 1 Printed/Typed Name: Marvin Taylor Signature: [illegible] Month 6 Day 24 Year 09
Transporter 2 Printed/Typed Name: Signature: Month Day Year

DESIGNATED FACILITY

18. Discrepancy
18a. Discrepancy Indication Space ☐ Quantity ☐ Type ☐ Residue ☐ Partial Rejection ☑ Full Rejection
Manifest Reference Number:
18b. Alternate Facility (or Generator): CES Office, 2470 Gulfway Drive, Port Arthur, TX 77642
U.S. EPA ID Number: 88585
Facility's Phone:
18c. Signature of Alternate Facility (or Generator) Month Day Year

19. Hazardous Waste Report Management Method Codes (i.e., codes for hazardous waste treatment, disposal, and recycling systems)

1.	2.	3.	4.
H132			

20. Designated Facility Owner or Operator: Certification of receipt of hazardous materials covered by the manifest except as noted in Item 18a
Printed/Typed Name: Vicki Hollingsworth Signature: [illegible] Month 6 Day 24 Year 09

EPA Form 8700-22 (Rev. 3-05) Previous editions are obsolete. **TRANSPORTER'S COPY**

EPAPA010000235

Method: RSH Mercaptan sulfur **12/3/2008 2:55:02 PM**
Start time: **6/24/2009 8:42:04 AM**

Results

No.	Comment / ID	Start time	Sample size and results			
1/1	WW-420	6/24/2009 8:42:04 AM		0.4930	g	
			R1 =	0.060	% as H2S	H2S Content
			R3 =	0.120	%Mercap no H2S	Mercaptan Content w/o H2S

Statistics

Rx	Name	n	Mean value	Unit	s	srel [%]
R1	H2S Content	1	0.060	% as H2S	NaN	NaN
R3	Mercaptan Content w/o H2S	1	0.120	%Mercap no H2S	NaN	NaN

(1) Modified
(2) Excluded
(3) Out of limits
(4) Resource expired
(5) srel above max srel
(6) srel above max srel for multiple determination
(7) Value out of limits, not saved in setup
(8) Sample data out of limits
(9) Standard evaluation used
(10) Result from buffer

CES Environmental Services, Inc.

4904 Griggs Road
Houston, TX 77021
Tel. (713) 676-1460
Fax. (713) 676-1676

Transportation Work Ticket

Folder ID : CES Enviornmental (CES - Port Arthur) Class 1, Non-hazardous Wastewater

Date : 6/24/2009 **Manifest # :**

Client : CES Environmental Services - Port Arthur **Ticket :** 88115

Phone : **Consignee :** Newpark Environmental Services, LLC

Transporter : CES Environmental Services, Inc.

Signature **Signature**

Leave CES Yard :	945 Am	**Arrive At Destination**	
Arrive At Customer :		**Begin Unloading :**	
Begin Loading :		**Finish Unloading :**	
Finish Loading :		**Leave Destination :**	
Leave Customer :		**Arrive At CES Yard :**	1215 pm

Customer PO #:

Total Hours:

CES Unload: ☐

Gross Weight :		**Ending Odometer :**	
Tare Weight :		**Begining Odometer :**	
Net Weight :		**Total Miles :**	

Driver : Saylor, Chris **Tractor # :** 2006 **Tote # :**

Signature : Chris **Trailer # :** 420 **Box # :**

Job Comments/Equipment :

Load Rejected

White (CES Office) Yellow (CES Office / Billing) Pink (CES Office / IFTA) Golden Rod (Customer)

METTLER TOLEDO

AUTHORIZED SIGNATURE

Newpark Env. Services LC CN 59047
26400 WILBER RD
WINNE TX 77665

ID	1	GROSS	68180	lb (1)
VEHICLE	2417	TARE	0	
TIME	11:35 AM	NET	68180	
DATE	06 24 09			

FORM #08302502O

EPAPA010000238

JULY 09

EPAPA010000239

WASTE WATER MANIFEST

EPAPA010000240

Please print or type. (Form designed for use on elite (12-pitch) typewriter.) Form Approved. OMB No. 2050-0039

UNIFORM HAZARDOUS WASTE MANIFEST

1. Generator ID Number: [illegible]
2. Page 1 of
3. Emergency Response Phone: [illegible]
4. Manifest Tracking Number: 005593246 JJK

5. Generator's Name and Mailing Address: [illegible]
Generator's Site Address (if different than mailing address): [illegible]
Generator's Phone: [illegible]

6. Transporter 1 Company Name: CEC Environmental Services, Inc. Rec ID: [illegible]
U.S. EPA ID Number: [illegible]

7. Transporter 2 Company Name:
U.S. EPA ID Number:

8. Designated Facility Name and Site Address: [illegible]
U.S. EPA ID Number: [illegible]
Facility's Phone: [illegible]

9a. HM	9b. U.S. DOT Description (including Proper Shipping Name, Hazard Class, ID Number, and Packing Group (if any))	10. Containers No.	10. Containers Type	11. Total Quantity	12. Unit Wt./Vol.	13. Waste Codes		
	1. [illegible]	[illegible]	[illegible]	500	[illegible]	[illegible]		
	2.							
	3.							
	4.							

14. Special Handling Instructions and Additional Information
[illegible]

15. **GENERATOR'S/OFFEROR'S CERTIFICATION:** I hereby declare that the contents of this consignment are fully and accurately described above by the proper shipping name, and are classified, packaged, marked and labeled/placarded, and are in all respects in proper condition for transport according to applicable international and national governmental regulations. If export shipment and I am the Primary Exporter, I certify that the contents of this consignment conform to the terms of the attached EPA Acknowledgment of Consent.
I certify that the waste minimization statement identified in 40 CFR 262.27(a) (if I am a large quantity generator) or (b) (if I am a small quantity generator) is true.

Generator's/Offeror's Printed/Typed Name: [illegible] Signature: [illegible] Month [illegible] Day [illegible] Year [illegible]

16. International Shipments ☐ Import to U.S. ☐ Export from U.S. Port of entry/exit:
Transporter signature (for exports only): Date leaving U.S.:

17. Transporter Acknowledgment of Receipt of Materials
Transporter 1 Printed/Typed Name: [illegible] Signature: [illegible] Month [illegible] Day [illegible] Year [illegible]
Transporter 2 Printed/Typed Name: Signature: Month Day Year

18. Discrepancy
18a. Discrepancy Indication Space ☐ Quantity ☐ Type ☐ Residue ☐ Partial Rejection ☐ Full Rejection
Manifest Reference Number:

18b. Alternate Facility (or Generator) U.S. EPA ID Number
Facility's Phone:

18c. Signature of Alternate Facility (or Generator) Month Day Year

19. Hazardous Waste Report Management Method Codes (i.e., codes for hazardous waste treatment, disposal, and recycling systems)

1.	2.	3.	4.
[illegible]			

20. Designated Facility Owner or Operator: Certification of receipt of hazardous materials covered by the manifest except as noted in Item 18a
Printed/Typed Name Signature Month Day Year

GENERATOR | INT'L | TRANSPORTER | DESIGNATED FACILITY

EPA Form 8700-22 (Rev. 3-05) Previous editions are obsolete. **GENERATOR'S INITIAL COPY**

CES Environmental Services, Inc.

4904 Griggs Road
Houston, TX 77021
Tel. (713) 676-1460
Fax. (713) 676-1676

Transportation Work Ticket

Folder ID : CES Internal Work

Date : 7/29/2009

Manifest # : 005593246 JJK

Client : CES Environmental Services - Port Arthur

Ticket : 89352

Phone : 7136761460

Consignee : CES Environmental Services, Inc.

Transporter : CES Environmental Services, Inc.

Signature [signature]

Signature

Leave CES Yard :		**Arrive At Destination**	14:00
Arrive At Customer :	11:00	**Begin Unloading :**	
Begin Loading :		**Finish Unloading :**	
Finish Loading :		**Leave Destination :**	14:30
Leave Customer :	12:30	**Arrive At CES Yard :**	16:00

Customer PO #:

Total Hours:

CES Unload: ☐

Gross Weight :	72,600	**Ending Odometer :**	136193
Tare Weight :	29,960	**Beginning Odometer :**	136004
Net Weight :	42,640	**Total Miles :**	189

Driver : Brown, Leroy

Tractor # : ~~294~~ 292

Tote # :

Signature : [signature]

Trailer # : ~~294~~ 239

Box # :

Job Comments/Equipment :

White (CES Office) Yellow (CES Office / Billing) Pink (CES Office / IFTA) Golden Rod (Customer)

WW TO HOUSTON
MANIFEST COPY in HOUSTON

CES Environmental Services, Inc.

4904 Griggs Road
Houston, TX 77021
Tel. (713) 676-1460
Fax. (713) 676-1676

Transportation Work Ticket

Folder ID : CES Internal Work

Date : 7/20/2009

Manifest # :

Client : CES Environmental Services - Port Arthur

Ticket : 89089

Phone : 7136761460

Consignee : CES Environmental Services, Inc.

Transporter : CES Environmental Services, Inc.

Signature Bo Cumberland

Signature

Leave CES Yard :	1100	**Arrive At Destination**	1500
Arrive At Customer :	1130	**Begin Unloading :**	
Begin Loading :		**Finish Unloading :**	
Finish Loading :		**Leave Destination :**	1735
Leave Customer :	1245	**Arrive At CES Yard :**	1900

Customer PO #:

Total Hours:

CES Unload: ☐

Gross Weight :	76560	**Ending Odometer :**	48521
Tare Weight :	31920	**Begining Odometer :**	48329
Net Weight :	47640	**Total Miles :**	192

Driver : Wilson, Kevin **Tractor # :** 2004 **Tote # :**

Signature : Kevin Wilson **Trailer # :** 239 **Box # :**

Job Comments/Equipment :

White (CES Office) Yellow (CES Office / Billing) Pink (CES Office / IFTA) Golden Rod (Customer)

#42004
#R239

DATE 7-20-09 NO. 617

PORT ARTHUR CHEMICAL ENVIRONMENTAL SERVICES
P.O. BOX 218
2420 SOUTH GULFWAY DRIVE
PORT ARTHUR, TEXAS 77640

PACES JOB # 89089

TICKET ID	617	
07/20/2009	11:27:21 am	
INBOUND WT	31920	lb
07/20/2009	12:32:29 pm	
OUTBOUND WT	76560	lb
NET WT	47640	

DRIVER ON ☐ OFF ☑

WEIGHED BY

258

Please print or type. (Form designed for use on elite (12-pitch) typewriter.)

Form Approved. OMB No. 2050-0039

UNIFORM HAZARDOUS WASTE MANIFEST

1. Generator ID Number: TXCESQG
2. Page 1 of: 1
3. Emergency Response Phone:
4. Manifest Tracking Number: 005593213 JJK

5. Generator's Name and Mailing Address
CES Environmental Services - Port Arthur
4904 Griggs Road
Houston, TX 77021
Generator's Phone:
State ID: CESQG

Generator's Site Address (if different than mailing address)
CES Environmental Services - Port Arthur
2420 Gulfway Drive
Port Arthur, TX 77641

6. Transporter 1 Company Name: CES Environmental Services, Inc.
State ID 30900
U.S. EPA ID Number: TXD008950461

7. Transporter 2 Company Name:
U.S. EPA ID Number:

8. Designated Facility Name and Site Address
CES Environmental Services, Inc.
4904 Griggs Rd.
Houston TX, 77021
Facility's Phone: (713) 676-1460
State ID 30900
U.S. EPA ID Number: TXD008950461

9a. HM	9b. U.S. DOT Description (including Proper Shipping Name, Hazard Class, ID Number, and Packing Group (if any))	10. Containers No.	10. Containers Type	11. Total Quantity	12. Unit Wt./Vol.	13. Waste Codes		
	1. Non-RCRA/Non DOT regulated wastewater	1	TT	5000	G	00011131		
	2.							
	3.							
	4.							

14. Special Handling Instructions and Additional Information
Folder ID : CES Internal Work
CES Job # - 88294
1) PA-3005 2) 3) 4)

15. **GENERATOR'S/OFFEROR'S CERTIFICATION:** I hereby declare that the contents of this consignment are fully and accurately described above by the proper shipping name, and are classified, packaged, marked and labeled/placarded, and are in all respects in proper condition for transport according to applicable international and national governmental regulations. If export shipment and I am the Primary Exporter, I certify that the contents of this consignment conform to the terms of the attached EPA Acknowledgment of Consent.
I certify that the waste minimization statement identified in 40 CFR 262.27(a) (if I am a large quantity generator) or (b) (if I am a small quantity generator) is true.

Generator's/Offeror's Printed/Typed Name: DD Cumberland
Signature:
Month 6 Day 26 Year 09

16. International Shipments ☐ Import to U.S. ☐ Export from U.S. Port of entry/exit:
Transporter signature (for exports only): Date leaving U.S.:

17. Transporter Acknowledgment of Receipt of Materials
Transporter 1 Printed/Typed Name: JACK GIPSON
Signature: Jack Gipson
Month 6 Day 26 Year 09
Transporter 2 Printed/Typed Name: Juan Irving
Signature:
Month 7 Day 15 Year 09

18. Discrepancy
18a. Discrepancy Indication Space ☐ Quantity ☐ Type ☐ Residue ☐ Partial Rejection ☐ Full Rejection
Manifest Reference Number:
18b. Alternate Facility (or Generator) U.S. EPA ID Number
Facility's Phone:
18c. Signature of Alternate Facility (or Generator) Month Day Year

19. Hazardous Waste Report Management Method Codes (i.e., codes for hazardous waste treatment, disposal, and recycling systems)
1. 2. 3. 4.

20. Designated Facility Owner or Operator: Certification of receipt of hazardous materials covered by the manifest except as noted in Item 18a
Printed/Typed Name: Johnstone Maloche
Signature:
Month 7 Day 15 Year 09

GENERATOR | INT'L | TRANSPORTER | DESIGNATED FACILITY

EPA Form 8700-22 (Rev. 3-05) Previous editions are obsolete.

DESIGNATED FACILITY TO DESTINATION STATE (IF REQUIRED)

258

Please print or type. (Form designed for use on elite (12-pitch) typewriter.)

Form Approved. OMB No. 2050-0039

UNIFORM HAZARDOUS WASTE MANIFEST

1. Generator ID Number: TXCESQG
2. Page 1 of
3. Emergency Response Phone
4. Manifest Tracking Number: 005593213 JJK

5. Generator's Name and Mailing Address
CES Environmental Services - Port Arthur
4904 Griggs Road
Houston, TX 77021
State ID: CESQG
Generator's Phone:

Generator's Site Address (if different than mailing address)
CES Environmental Services - Port Arthur
2420 Gulfway Drive
Port Arthur, TX 77641

6. Transporter 1 Company Name: CES Environmental Services, Inc.
State ID: 30900
U.S. EPA ID Number: TXD008950461

7. Transporter 2 Company Name
U.S. EPA ID Number

8. Designated Facility Name and Site Address
CES Environmental Services, Inc.
4904 Griggs Rd.
Houston TX, 77021
State ID: 30900
Facility's Phone: (713) 676-1460
U.S. EPA ID Number: TXD008950461

9a. HM	9b. U.S. DOT Description (including Proper Shipping Name, Hazard Class, ID Number, and Packing Group (if any))	10. Containers No.	10. Containers Type	11. Total Quantity	12. Unit Wt./Vol.	13. Waste Codes
	1. Non-RCRA/Non DOT regulated wastewater	1	TT	5000	G	D001 131
	2.					
	3.					
	4.					

14. Special Handling Instructions and Additional Information
Folder ID : CES Internal Work
CES Job # - 88294
1) PA-3005 2) 3) 4)

15. **GENERATOR'S/OFFEROR'S CERTIFICATION:** I hereby declare that the contents of this consignment are fully and accurately described above by the proper shipping name, and are classified, packaged, marked and labeled/placarded, and are in all respects in proper condition for transport according to applicable international and national governmental regulations. If export shipment and I am the Primary Exporter, I certify that the contents of this consignment conform to the terms of the attached EPA Acknowledgment of Consent.
I certify that the waste minimization statement identified in 40 CFR 262.27(a) (if I am a large quantity generator) or (b) (if I am a small quantity generator) is true.

Generator's/Offeror's Printed/Typed Name: Ed Cumberland
Signature:
Month 6 Day 26 Year 09

INT'L

16. International Shipments ☐ Import to U.S. ☐ Export from U.S. Port of entry/exit:
Transporter signature (for exports only): Date leaving U.S.:

TRANSPORTER

17. Transporter Acknowledgment of Receipt of Materials
Transporter 1 Printed/Typed Name: JACK GIBSON
Signature: Jack Gibson
Month 6 Day 24 Year 09
Transporter 2 Printed/Typed Name: Susan Fries
Signature:
Month 7 Day 15 Year 09

DESIGNATED FACILITY

18. Discrepancy
18a. Discrepancy Indication Space ☐ Quantity ☐ Type ☐ Residue ☐ Partial Rejection ☐ Full Rejection
Manifest Reference Number:

18b. Alternate Facility (or Generator)
U.S. EPA ID Number
Facility's Phone:

18c. Signature of Alternate Facility (or Generator)
Month Day Year

19. Hazardous Waste Report Management Method Codes (i.e., codes for hazardous waste treatment, disposal, and recycling systems)
1. 2. 3. 4.

20. Designated Facility Owner or Operator: Certification of receipt of hazardous materials covered by the manifest except as noted in Item 18a
Printed/Typed Name: Johnstone Malecho
Signature:
Month 7 Day 15 Year 09

EPA Form 8700-22 (Rev. 3-05) Previous editions are obsolete.

DESIGNATED FACILITY TO GENERATOR

EPAPA010000247

258

Please print or type. (Form designed for use on elite (12-pitch) typewriter.)

Form Approved. OMB No. 2050-0039

UNIFORM HAZARDOUS WASTE MANIFEST

1. Generator ID Number: TXCES005
2. Page 1 of
3. Emergency Response Phone
4. Manifest Tracking Number: **005593213 JJK**

5. Generator's Name and Mailing Address
CES Environmental Services - Port Arthur
4904 Griggs Road
Houston, TX 77021
State ID: CES05
Generator's Phone:

Generator's Site Address (if different than mailing address)
CES Environmental Services - Port Arthur
2420 Cultver Drive
Port Arthur, TX 77641

6. Transporter 1 Company Name: CES Environmental Services, Inc. State ID 30900
U.S. EPA ID Number: TXD008950461

7. Transporter 2 Company Name
U.S. EPA ID Number

8. Designated Facility Name and Site Address
CES Environmental Services, Inc.
4904 Griggs Rd.
Houston TX 77021
State ID 30900
Facility's Phone: (713) 676 1460
U.S. EPA ID Number: TXD008950461

9a. HM	9b. U.S. DOT Description (including Proper Shipping Name, Hazard Class, ID Number, and Packing Group (if any))	10. Containers No.	10. Containers Type	11. Total Quantity	12. Unit Wt./Vol.	13. Waste Codes
	1. Non-RCRA/Non DOT regulated wastewater	1	TT	5000	G	D001 D31
	2.					
	3.					
	4.					

14. Special Handling Instructions and Additional Information
Folder ID . CES Internal Work
CES Job # - 88234
1) PA-3005 2) 3) 4)

15. **GENERATOR'S/OFFEROR'S CERTIFICATION:** I hereby declare that the contents of this consignment are fully and accurately described above by the proper shipping name, and are classified, packaged, marked and labeled/placarded, and are in all respects in proper condition for transport according to applicable international and national governmental regulations. If export shipment and I am the Primary Exporter, I certify that the contents of this consignment conform to the terms of the attached EPA Acknowledgment of Consent.
I certify that the waste minimization statement identified in 40 CFR 262.27(a) (if I am a large quantity generator) or (b) (if I am a small quantity generator) is true.

Generator's/Offeror's Printed/Typed Name: D D Cumberland
Signature:
Month 6 Day 26 Year 09

16. International Shipments ☐ Import to U.S. ☐ Export from U.S. Port of entry/exit:
Transporter signature (for exports only): Date leaving U.S.:

17. Transporter Acknowledgment of Receipt of Materials
Transporter 1 Printed/Typed Name: JACK GIPSON
Signature:
Month 6 Day 29 Year 09
Transporter 2 Printed/Typed Name: Susan Friis
Signature:
Month 7 Day 15 Year 09

18. Discrepancy
18a. Discrepancy Indication Space ☐ Quantity ☐ Type ☐ Residue ☐ Partial Rejection ☐ Full Rejection
Manifest Reference Number:
18b. Alternate Facility (or Generator) U.S. EPA ID Number
Facility's Phone:
18c. Signature of Alternate Facility (or Generator) Month Day Year

19. Hazardous Waste Report Management Method Codes (i.e., codes for hazardous waste treatment, disposal, and recycling systems)
1. 2. 3. 4.

20. Designated Facility Owner or Operator: Certification of receipt of hazardous materials covered by the manifest except as noted in Item 18a
Printed/Typed Name: Johnstone Malroche
Signature:
Month 7 Day 15 Year 09

GENERATOR | INT'L | TRANSPORTER | DESIGNATED FACILITY

EPA Form 8700-22 (Rev. 3-05) Previous editions are obsolete.

DESIGNATED FACILITY'S COPY

EPAPA010000248

258

Please print or type. (Form designed for use on elite (12-pitch) typewriter.)

Form Approved. OMB No. 2050-0039

UNIFORM HAZARDOUS WASTE MANIFEST

1. Generator ID Number: TXD[illegible]
2. Page 1 of
3. Emergency Response Phone
4. Manifest Tracking Number: **005593213 JJK**

5. Generator's Name and Mailing Address
CES Environmental Services - Port Arthur
9804 Griggs Road
Houston, TX 77023
State ID: [illegible]
Generator's Phone:

Generator's Site Address (if different than mailing address)
CES Environmental Services - Port Arthur
3430 Gulfway Drive
Port Arthur, TX 77641

6. Transporter 1 Company Name: CES Environmental Services, Inc.
State ID: 30900
U.S. EPA ID Number: TXD008950461

7. Transporter 2 Company Name
U.S. EPA ID Number

8. Designated Facility Name and Site Address
CES Environmental Services, Inc.
9804 Griggs Rd.
Houston, TX 77023
State ID: 30900
Facility's Phone: (713) 675-1460
U.S. EPA ID Number: TXD008950461

9a. HM	9b. U.S. DOT Description (including Proper Shipping Name, Hazard Class, ID Number, and Packing Group (if any))	10. Containers No.	10. Containers Type	11. Total Quantity	12. Unit Wt./Vol.	13. Waste Codes		
	1. Non-RCRA/Non DOT regulated wastewater	1	TT	5000	G	D001	D[illegible]	
	2.							
	3.							
	4.							

14. Special Handling Instructions and Additional Information
Folder ID: CES Internal Work
CES Job # - 95234
1) RA-9905 2) 3) 4)

15. **GENERATOR'S/OFFEROR'S CERTIFICATION:** I hereby declare that the contents of this consignment are fully and accurately described above by the proper shipping name, and are classified, packaged, marked and labeled/placarded, and are in all respects in proper condition for transport according to applicable international and national governmental regulations. If export shipment and I am the Primary Exporter, I certify that the contents of this consignment conform to the terms of the attached EPA Acknowledgment of Consent.
I certify that the waste minimization statement identified in 40 CFR 262.27(a) (if I am a large quantity generator) or (b) (if I am a small quantity generator) is true.

Generator's/Offeror's Printed/Typed Name: DO CAMPBELL
Signature:
Month 6 Day 26 Year 09

16. International Shipments ☐ Import to U.S. ☐ Export from U.S. Port of entry/exit:
Transporter signature (for exports only): Date leaving U.S.:

17. Transporter Acknowledgment of Receipt of Materials
Transporter 1 Printed/Typed Name: JACK GIBSON
Signature:
Month 6 Day 26 Year 09
Transporter 2 Printed/Typed Name: Susan Fries
Signature:
Month 7 Day 15 Year 09

18. Discrepancy
18a. Discrepancy Indication Space ☐ Quantity ☐ Type ☐ Residue ☐ Partial Rejection ☐ Full Rejection
Manifest Reference Number:

18b. Alternate Facility (or Generator)
U.S. EPA ID Number
Facility's Phone:

18c. Signature of Alternate Facility (or Generator)
Month Day Year

19. Hazardous Waste Report Management Method Codes (i.e., codes for hazardous waste treatment, disposal, and recycling systems)
1. 2. 3. 4.

20. Designated Facility Owner or Operator: Certification of receipt of hazardous materials covered by the manifest except as noted in Item 18a
Printed/Typed Name: Johnston Natrche
Signature:
Month 7 Day 15 Year 09

GENERATOR | INT'L | TRANSPORTER | DESIGNATED FACILITY

EPA Form 8700-22 (Rev. 3-05) Previous editions are obsolete.

TRANSPORTER'S COPY

258

Please print or type. (Form designed for use on elite (12-pitch) typewriter.)

Form Approved. OMB No. 2050-0039

UNIFORM HAZARDOUS WASTE MANIFEST

1. Generator ID Number: TXD[illegible]
2. Page 1 of
3. Emergency Response Phone
4. Manifest Tracking Number: 005593213 JJK

GENERATOR

5. Generator's Name and Mailing Address: CES Environmental Services, Port Arthur, [illegible] Groves Road, Groves, TX 77619
State ID: [illegible]
Generator's Site Address (if different than mailing address): CES Environmental Services, Inc. Port Arthur, [illegible] Groves Rd., Port Arthur, TX 77640
Generator's Phone:

6. Transporter 1 Company Name: CES Environmental Services, Inc.
State ID: [illegible]
U.S. EPA ID Number: TXD[illegible]

7. Transporter 2 Company Name:
U.S. EPA ID Number:

8. Designated Facility Name and Site Address: CES Environmental Services, Inc., [illegible] Groves Rd., Houston, TX 77061
State ID: [illegible]
U.S. EPA ID Number: TXD[illegible]
Facility's Phone: [illegible]

9a. HM	9b. U.S. DOT Description (including Proper Shipping Name, Hazard Class, ID Number, and Packing Group (if any))	10. Containers No.	10. Containers Type	11. Total Quantity	12. Unit Wt./Vol.	13. Waste Codes		
	1. Non-RCRA Non-DOT regulated waste	[illegible]	[illegible]	500	[illegible]	[illegible]	[illegible]	
	2.							
	3.							
	4.							

14. Special Handling Instructions and Additional Information
Profile ID: CES Internal Waste
1) PA-[illegible] 2) 3) 4)

15. **GENERATOR'S/OFFEROR'S CERTIFICATION:** I hereby declare that the contents of this consignment are fully and accurately described above by the proper shipping name, and are classified, packaged, marked and labeled/placarded, and are in all respects in proper condition for transport according to applicable international and national governmental regulations. If export shipment and I am the Primary Exporter, I certify that the contents of this consignment conform to the terms of the attached EPA Acknowledgment of Consent.
I certify that the waste minimization statement identified in 40 CFR 262.27(a) (if I am a large quantity generator) or (b) (if I am a small quantity generator) is true.

Generator's/Offeror's Printed/Typed Name: D. Catherine C
Signature:
Month: 6 Day: 26 Year: 09

INT'L

16. International Shipments ☐ Import to U.S. ☐ Export from U.S. Port of entry/exit:
Transporter signature (for exports only): Date leaving U.S.:

TRANSPORTER

17. Transporter Acknowledgment of Receipt of Materials
Transporter 1 Printed/Typed Name: [illegible]
Signature:
Month: 6 Day: 26 Year: 09
Transporter 2 Printed/Typed Name: [illegible]
Signature:
Month: 7 Day: 15 Year: 09

DESIGNATED FACILITY

18. Discrepancy
18a. Discrepancy Indication Space ☐ Quantity ☐ Type ☐ Residue ☐ Partial Rejection ☐ Full Rejection
Manifest Reference Number:
18b. Alternate Facility (or Generator)
U.S. EPA ID Number
Facility's Phone:
18c. Signature of Alternate Facility (or Generator)
Month Day Year

19. Hazardous Waste Report Management Method Codes (i.e., codes for hazardous waste treatment, disposal, and recycling systems)
1. 2. 3. 4.

20. Designated Facility Owner or Operator: Certification of receipt of hazardous materials covered by the manifest except as noted in Item 18a
Printed/Typed Name: [illegible]
Signature:
Month: 7 Day: 15 Year: 09

EPA Form 8700-22 (Rev. 3-05) Previous editions are obsolete.

GENERATOR'S INITIAL COPY

EPAPA010000250

CES Environmental Services, Inc.

4904 Griggs Road
Houston, TX 77021
Tel. (713) 676-1460
Fax. (713) 676-1676

Transportation Work Ticket

Folder ID : CES Internal Work

Date : 7/15/2009 **Manifest # :** 005593213

Client : CES Environmental Services, Inc. **Ticket :** 88946

Phone : 7136761460 **Consignee :** CES Environmental (Port Arthur)

Transporter : CES Environmental (Port Arthur)

Signature **Signature**

Leave CES Yard :	6:00 AM	**Arrive At Destination**	10:30 AM
Arrive At Customer :	8:00 AM.	**Begin Unloading :**	
Begin Loading :		**Finish Unloading :**	
Finish Loading :		**Leave Destination :**	
Leave Customer :	8:15 AM.	**Arrive At CES Yard :**	

Customer PO #:

Total Hours:

CES Unload: ☒

Gross Weight :	69500	**Ending Odometer :**	123870
Tare Weight :		**Begining Odometer :**	123770
Net Weight :		**Total Miles :**	

Driver : Frias, Juan **Tractor # :** 2003 **Tote # :**

Signature : **Trailer # :** 258 **Box # :**

Job Comments/Equipment :

White (CES Office) Yellow (CES Office / Billing) Pink (CES Office / IFTA) Golden Rod (Customer)

State Certification of Weights and Measures

A-1 Public Scales

727 McCarty Dr. (Highway 90, Beaumont Rd.)
Mail to: P.O. Box 1261, Houston, TX 77251
Tel: (713) 675-9500, Fax: (713) 675-9501

Ticket No.

A113113

1st Weigh Ticket

Date: 7/15/2009
Time: 08:39:43

Certified

DEPARTMENT OF AGRICULTURE • TEXAS •

Account No	03185		
Customer	CES ENVIRONMENTAL SERVICES, INC.		
Truck No	2003	Trailer	258
Pay Type	Charge	Amount	$6.00
Coming From		Going To	
Comments			

Driver's Name:

Driver's Signature: Juan Ruiz

Weigher's Signature: Blanco

Weights

Gross	69580
Tare	
Net LB	0
Net TON	0
Steer	
Drive	
Trailer	

Wood George,
Certified Public Weigher,
Harris County, Texas

This is to certify that I have this day weighed the above described articles and that the weight and conditions set forth are true and correct.

8:15 am

Please print or type. (Form designed for use on elite (12-pitch) typewriter.)

Form Approved. OMB No. 2050-0039

UNIFORM HAZARDOUS WASTE MANIFEST

1. Generator ID Number: TXR000079307
2. Page 1 of
3. Emergency Response Phone
4. Manifest Tracking Number: 005593219 JJK

5. Generator's Name and Mailing Address: CES Environmental Services - Port Arthur, 4241 Griggs Road, Houston, TX 77021
Generator's Site Address (if different than mailing address): CES Environmental Services - Port Arthur, 2400 Gateway Drive, Port Arthur, TX 77640
Generator's Phone:

6. Transporter 1 Company Name: CES Environmental Services, Inc.
U.S. EPA ID Number: TXD000250101

7. Transporter 2 Company Name
U.S. EPA ID Number

8. Designated Facility Name and Site Address: Veolia Environmental Services LLC, 10600 Wilber Rd, Winnie TX, 77665
U.S. EPA ID Number: N/A
Facility's Phone: (409) 296-2119

9a. HM	9b. U.S. DOT Description (including Proper Shipping Name, Hazard Class, ID Number, and Packing Group (if any))	10. Containers No.	10. Containers Type	11. Total Quantity	12. Unit Wt./Vol.	13. Waste Codes		
	1. Non-RCRA Non DOT regulated material			500	G			
	2.							
	3.							
	4.							

14. Special Handling Instructions and Additional Information
Case 1, Performance Materials
5082 gal

15. **GENERATOR'S/OFFEROR'S CERTIFICATION:** I hereby declare that the contents of this consignment are fully and accurately described above by the proper shipping name, and are classified, packaged, marked and labeled/placarded, and are in all respects in proper condition for transport according to applicable international and national governmental regulations. If export shipment and I am the Primary Exporter, I certify that the contents of this consignment conform to the terms of the attached EPA Acknowledgment of Consent.
I certify that the waste minimization statement identified in 40 CFR 262.27(a) (if I am a large quantity generator) or (b) (if I am a small quantity generator) is true.

Generator's/Offeror's Printed/Typed Name | Signature | Month 1 | Day 8 | Year 09

GENERATOR

INT'L

16. International Shipments ☐ Import to U.S. ☐ Export from U.S. Port of entry/exit:
Transporter signature (for exports only): Date leaving U.S.:

TRANSPORTER

17. Transporter Acknowledgment of Receipt of Materials
Transporter 1 Printed/Typed Name | Signature | Month | Day | Year
Transporter 2 Printed/Typed Name | Signature | Month | Day | Year

DESIGNATED FACILITY

18. Discrepancy
18a. Discrepancy Indication Space ☐ Quantity ☐ Type ☐ Residue ☐ Partial Rejection ☐ Full Rejection
Manifest Reference Number:
18b. Alternate Facility (or Generator)
U.S. EPA ID Number
Facility's Phone:
18c. Signature of Alternate Facility (or Generator) | Month | Day | Year

19. Hazardous Waste Report Management Method Codes (i.e., codes for hazardous waste treatment, disposal, and recycling systems)
1. H134 | 2. | 3. | 4.

20. Designated Facility Owner or Operator: Certification of receipt of hazardous materials covered by the manifest except as noted in Item 18a
Printed/Typed Name: BRIEN WATSON | Signature: Brien Watson | Month 07 | Day 05 | Year 09

EPA Form 8700-22 (Rev. 3-05) Previous editions are obsolete.

GENERATOR'S INITIAL COPY

CES Environmental Services, Inc.

4904 Griggs Road
Houston, TX 77021
Tel. (713) 676-1460
Fax. (713) 676-1676

Transportation Work Ticket

Folder ID : CES Environmental (CES - Port Arthur) Class 1, Non-hazardous Wastewater

Date : 7/9/2009 **Manifest # :** 005593219 JJK

Client : CES Environmental Services - Port Arthur **Ticket :** 88730

Phone : **Consignee :** Newpark Environmental Services, LLC

Transporter : CES Environmental Services, Inc.

Signature Jack Gipson **Signature**

Leave CES Yard :	9:30AM	**Arrive At Destination**	
Arrive At Customer :	10:15AM	**Begin Unloading :**	
Begin Loading :	10:20AM	**Finish Unloading :**	
Finish Loading :	10:45AM	**Leave Destination :**	
Leave Customer :	10:50AM	**Arrive At CES Yard :**	12:05pm

Customer PO #:

Total Hours:

CES Unload: ☐

Gross Weight :		**Ending Odometer :**	5/09
Tare Weight :		**Begining Odometer :**	
Net Weight :		**Total Miles :**	

Driver : Gipson, Jack **Tractor # :** 294 **Tote # :**

Signature : Jack Gipson **Trailer # :** 269 **Box # :**

Job Comments/Equipment : Haul one load to New Park

White (CES Office) Yellow (CES Office / Billing) Pink (CES Office / IFTA) Golden Rod (Customer)

METTLER TOLEDO

AUTHORIZED SIGNATURE

Newpark Env. Services LC CN 59409
26400 WILBER RD
WINNE TX 77665

ID	0	GROSS	76280 lb	(1)
VEHICLE	917	TARE	31560 lb	
TIME	11:40 AM	NET	44720 lb	
DATE	07 09 09			

EPAPA010000255

Please print or type. (Form designed for use on elite (12-pitch) typewriter.) Form Approved. OMB No. 2050-0039

UNIFORM HAZARDOUS WASTE MANIFEST

1. Generator ID Number: TXR000079307
2. Page 1 of 1
3. Emergency Response Phone
4. Manifest Tracking Number: 005593215 JJK

5. Generator's Name and Mailing Address: CLS Environmental Services - Port Arthur State ID 88585
4904 Gregg Road
Houston, TX 77021

Generator's Site Address (if different than mailing address): CLS Environmental Services - Port Arthur
2400 Gulfway Drive
Port Arthur, TX 77640

Generator's Phone:

6. Transporter 1 Company Name: CLS Environmental Services, Inc. State ID 30500 U.S. EPA ID Number: TXD000250461

7. Transporter 2 Company Name U.S. EPA ID Number

8. Designated Facility Name and Site Address: Waste Management of Texas, LLC State ID 39099 U.S. EPA ID Number
25400 Witter Rd
Winnie TX, 77665
Facility's Phone: (409) 734-3119 N/A

9a. HM	9b. U.S. DOT Description (including Proper Shipping Name, Hazard Class, ID Number, and Packing Group (if any))	10. Containers No.	10. Containers Type	11. Total Quantity	12. Unit Wt./Vol.	13. Waste Codes
	1. Non-RCRA/non DOT regulated waste water	1	TT	Cell	G	D001 D01
	2.					
	3.					
	4.					

14. Special Handling Instructions and Additional Information
Class 1 Non-hazardous Wastewater
1) 0808811508H 1) 88585 6) 309 W 8) 39098 5318gal

15. **GENERATOR'S/OFFEROR'S CERTIFICATION:** I hereby declare that the contents of this consignment are fully and accurately described above by the proper shipping name, and are classified, packaged, marked and labeled/placarded, and are in all respects in proper condition for transport according to applicable international and national governmental regulations. If export shipment and I am the Primary Exporter, I certify that the contents of this consignment conform to the terms of the attached EPA Acknowledgment of Consent.
I certify that the waste minimization statement identified in 40 CFR 262.27(a) (if I am a large quantity generator) or (b) (if I am a small quantity generator) is true.

Generator's/Offeror's Printed/Typed Name: D Cantu Signature: [signature] Month 7 Day 6 Year 09

GENERATOR

INT'L

16. International Shipments ☐ Import to U.S. ☐ Export from U.S. Port of entry/exit:
Transporter signature (for exports only): Date leaving U.S.:

TRANSPORTER

17. Transporter Acknowledgment of Receipt of Materials
Transporter 1 Printed/Typed Name: Robert Crapson Signature: [signature] Month Day Year
Transporter 2 Printed/Typed Name Signature Month Day Year

DESIGNATED FACILITY

18. Discrepancy
18a. Discrepancy Indication Space ☐ Quantity ☐ Type ☐ Residue ☐ Partial Rejection ☐ Full Rejection
Manifest Reference Number:
18b. Alternate Facility (or Generator) U.S. EPA ID Number
Facility's Phone:
18c. Signature of Alternate Facility (or Generator) Month Day Year

19. Hazardous Waste Report Management Method Codes (i.e., codes for hazardous waste treatment, disposal, and recycling systems)
1. H134 2. 3. 4.

20. Designated Facility Owner or Operator: Certification of receipt of hazardous materials covered by the manifest except as noted in Item 18a
Printed/Typed Name: Vicki Hoffauer Signature: [signature] Month 7 Day 6 Year 09

EPA Form 8700-22 (Rev. 3-05) Previous editions are obsolete. **TRANSPORTER'S COPY**

EPAPA010000256

CES Environmental Services, Inc.

4904 Griggs Road
Houston, TX 77021
Tel. (713) 676-1460
Fax. (713) 676-1676

Transportation Work Ticket

Folder ID : CES Environmental (CES - Port Arthur) Class 1, Non-hazardous Wastewater

Date : 7/6/2009 **Manifest # :**

Client : CES Environmental Services - Port Arthur **Ticket :** 88648

Phone : **Consignee :** Newpark Environmental Services, LLC

Transporter : CES Environmental Services, Inc.

Signature **Signature**

Leave CES Yard :	3:20pm	**Arrive At Destination**	
Arrive At Customer :	4:00pm	**Begin Unloading :**	
Begin Loading :	4:25pm	**Finish Unloading :**	
Finish Loading :	4:45pm	**Leave Destination :**	
Leave Customer :	4:55pm	**Arrive At CES Yard :**	5:35pm

Customer PO #:

Total Hours:

CES Unload: ☐

Gross Weight :		**Ending Odometer :**	
Tare Weight :		**Begining Odometer :**	
Net Weight :		**Total Miles :**	

Driver : Gipson, Jack **Tractor # :** 294 **Tote # :**

Signature : Jack Gipson **Trailer # :** 269 **Box # :**

Job Comments/Equipment : Haul one load of waste water from PACES to New Park Winnie TX.

Did not get scale Ticket

White (CES Office) Yellow (CES Office / Billing) Pink (CES Office / IFTA) Golden Rod (Customer)

Possible
Flammable
Liq

Please print or type. (Form designed for use on elite (12-pitch) typewriter.)

Form Approved. OMB No. 2050-0039

UNIFORM HAZARDOUS WASTE MANIFEST

1. Generator ID Number: TXR000079307
2. Page 1 of 1
3. Emergency Response Phone: (713) 676-1460
4. Manifest Tracking Number: 005593221 JJK

GENERATOR

5. Generator's Name and Mailing Address: Port Arthur State ID: 30055
4904 Griggs Road
Houston, TX 77021
(713) 676-1460
Generator's Phone:

Generator's Site Address (if different than mailing address)
2930 S. Gulfway Drive
Port Arthur, TX 77640
(713) 676-1460

6. Transporter 1 Company Name: Environmental Services, Inc. State ID: 30900 U.S. EPA ID Number: TXD069950461

7. Transporter 2 Company Name U.S. EPA ID Number

8. Designated Facility Name and Site Address State ID: 30900 U.S. EPA ID Number
4904 Griggs Rd
Houston TX 77021
(713) 676-1460
Facility's Phone: TXD069950461

9a. HM	9b. U.S. DOT Description (including Proper Shipping Name, Hazard Class, ID Number, and Packing Group (if any))	10. Containers No.	10. Containers Type	11. Total Quantity	12. Unit Wt./Vol.	13. Waste Codes
	1. [illegible]			550		
	2.					
	3.					
	4.					

14. Special Handling Instructions and Additional Information
This is to certify that the above named materials are properly classified, described, packaged, marked and labeled, and are in proper condition for transportation according to the applicable regulations of the Department of Transportation. [illegible]
1) [illegible] 2) 3) 4)

15. **GENERATOR'S/OFFEROR'S CERTIFICATION:** I hereby declare that the contents of this consignment are fully and accurately described above by the proper shipping name, and are classified, packaged, marked and labeled/placarded, and are in all respects in proper condition for transport according to applicable international and national governmental regulations. If export shipment and I am the Primary Exporter, I certify that the contents of this consignment conform to the terms of the attached EPA Acknowledgment of Consent.
I certify that the waste minimization statement identified in 40 CFR 262.27(a) (if I am a large quantity generator) or (b) (if I am a small quantity generator) is true.

Generator's/Offeror's Printed/Typed Name: DO CUMBERLAND Signature: [signature] Month 7 Day 17 Year 09

INT'L

16. International Shipments ☐ Import to U.S. ☐ Export from U.S. Port of entry/exit:
Transporter signature (for exports only): Date leaving U.S.:

TRANSPORTER

17. Transporter Acknowledgment of Receipt of Materials
Transporter 1 Printed/Typed Name: JUAN MENDOZA Signature: [signature] Month 7 Day 17 Year 09
Transporter 2 Printed/Typed Name Signature Month Day Year

DESIGNATED FACILITY

18. Discrepancy
18a. Discrepancy Indication Space ☐ Quantity ☐ Type ☐ Residue ☐ Partial Rejection ☐ Full Rejection
Manifest Reference Number:
18b. Alternate Facility (or Generator) U.S. EPA ID Number
Facility's Phone:
18c. Signature of Alternate Facility (or Generator) Month Day Year

19. Hazardous Waste Report Management Method Codes (i.e., codes for hazardous waste treatment, disposal, and recycling systems)
1. H141 2. 3. 4.

20. Designated Facility Owner or Operator: Certification of receipt of hazardous materials covered by the manifest except as noted in Item 18a
Printed/Typed Name Signature Month Day Year

EPA Form 8700-22 (Rev. 3-05) Previous editions are obsolete.

GENERATOR'S INITIAL COPY

EPAPA010000259

Please pr[illegible]pe. (Form designed for use on elite (12-pitch) typewriter.) Form Approved. OMB No. 2050-0039

UNIFORM HAZARDOUS WASTE MANIFEST

1. Generator ID Number: TXR000079307
2. Page 1 of 1
3. Emergency Response Phone: (713) 676-1460
4. Manifest Tracking Number: 005593221 JJK

5. Generator's Name and Mailing Address: [illegible] Port Arthur, 4904 Griggs Road, Houston, TX 77021 — State ID [illegible]
Generator's Site Address (if different than mailing address): [illegible], 2400 S. Gulfway Drive, Port Arthur, TX 77640
Generator's Phone: (713) 676-1460 | (713) 676-1460

6. Transporter 1 Company Name: CES Environmental Services, Inc. — State ID 30900 — U.S. EPA ID Number: TXD008950461

7. Transporter 2 Company Name — U.S. EPA ID Number

8. Designated Facility Name and Site Address: 4904 Griggs Rd, Houston TX, 77021 — State ID 30900 — U.S. EPA ID Number: TXD008950461
Facility's Phone: (713) 676-1460

9a. HM	9b. U.S. DOT Description (including Proper Shipping Name, Hazard Class, ID Number, and Packing Group (if any))	10. Containers No.	10. Containers Type	11. Total Quantity	12. Unit Wt./Vol.	13. Waste Codes
X	1. NON-RCRA/non DOT regulated rinse water (per 49 CFR 173.150 (a)(2))	1	CY	5500	G	D001
	2.					
	3.					
	4.					

14. Special Handling Instructions and Additional Information: This is to certify that the above-named materials are properly classified, described, packaged, marked and labeled, and are in proper condition for transportation according to the applicable regulations of the Department of Transportation. CES Job # - 88049
1) PA-2005 2) 3) 4)

15. **GENERATOR'S/OFFEROR'S CERTIFICATION:** I hereby declare that the contents of this consignment are fully and accurately described above by the proper shipping name, and are classified, packaged, marked and labeled/placarded, and are in all respects in proper condition for transport according to applicable international and national governmental regulations. If export shipment and I am the Primary Exporter, I certify that the contents of this consignment conform to the terms of the attached EPA Acknowledgment of Consent.
I certify that the waste minimization statement identified in 40 CFR 262.27(a) (if I am a large quantity generator) or (b) (if I am a small quantity generator) is true.

Generator's/Offeror's Printed/Typed Name: DO CUMBERLAND — Signature: [signature] — Month 7 Day 17 Year 09

GENERATOR

16. International Shipments ☐ Import to U.S. ☐ Export from U.S. Port of entry/exit:
Transporter signature (for exports only): Date leaving U.S.:

INT'L

17. Transporter Acknowledgment of Receipt of Materials
Transporter 1 Printed/Typed Name: JUAN MENDOZA — Signature: [signature] — Month 7 Day 17 Year 09
Transporter 2 Printed/Typed Name — Signature — Month Day Year

TRANSPORTER

18. Discrepancy
18a. Discrepancy Indication Space ☐ Quantity ☐ Type ☐ Residue ☐ Partial Rejection ☐ Full Rejection
Manifest Reference Number:
18b. Alternate Facility (or Generator) — U.S. EPA ID Number
Facility's Phone:
18c. Signature of Alternate Facility (or Generator) — Month Day Year

19. Hazardous Waste Report Management Method Codes (i.e., codes for hazardous waste treatment, disposal, and recycling systems)
1. H141 2. 3. 4.

20. Designated Facility Owner or Operator: Certification of receipt of hazardous materials covered by the manifest except as noted in Item 18a
Printed/Typed Name — Signature — Month Day Year

DESIGNATED FACILITY

EPA Form 8700-22 (Rev. 3-05) Previous editions are obsolete. **TRANSPORTER'S COPY**

EPAPA010000260

CES Environmental Services, Inc.

4904 Griggs Road
Houston, TX 77021
Tel. (713) 676-1460
Fax. (713) 676-1676

Transportation Work Ticket

Folder ID : CES Internal Work

Date : 7/17/2009 **Manifest # :**

Client : CES Environmental Services - Port Arthur **Ticket :** 89049

Phone : 7136761460 **Consignee :** CES Environmental Services, Inc.

Transporter : CES Environmental Services, Inc.

Signature **Signature**

Leave CES Yard :	3:00	**Arrive At Destination**	5:15
Arrive At Customer :		**Begin Unloading :**	
Begin Loading :		**Finish Unloading :**	
Finish Loading :		**Leave Destination :**	5:45
Leave Customer :		**Arrive At CES Yard :**	

Customer PO #:

Total Hours:

CES Unload: ☐

Gross Weight :		**Ending Odometer :**	188332
Tare Weight :		**Begining Odometer :**	188234
Net Weight :		**Total Miles :**	98

Driver : Mendoza, Juan **Tractor # :** 2001 **Tote # :**

Signature : **Trailer # :** 258 **Box # :**

Job Comments/Equipment : Drop Trailer

White (CES Office) Yellow (CES Office / Billing) Pink (CES Office / IFTA) Golden Rod (Customer)

258

Please print or type. (Form designed for use on elite (12-pitch) typewriter.) Form Approved. OMB No. 2050-0039

UNIFORM HAZARDOUS WASTE MANIFEST

1. Generator ID Number: TXR000079307
2. Page 1 of
3. Emergency Response Phone: (713) 675-1460
4. Manifest Tracking Number: **005593239 JJK**

5. Generator's Name and Mailing Address
CES Environmental Services - Port Arthur
4904 Griggs Road
Houston, TX 77021
State ID: 88555
Generator's Phone: (713) 675-1460

Generator's Site Address (if different than mailing address)
CES Environmental Services - Port Arthur
2400 S. Gulfway Drive
Port Arthur, TX 77640

6. Transporter 1 Company Name: CES Environmental Services, Inc. State ID: 30900 U.S. EPA ID Number: TXD088050461

7. Transporter 2 Company Name U.S. EPA ID Number

8. Designated Facility Name and Site Address
CES Environmental Services, Inc.
4904 Griggs Rd.
Houston TX, 77021
State ID: 30900
Facility's Phone: (713) 675-1460
U.S. EPA ID Number: TXD088050461

9a. HM	9b. U.S. DOT Description (including Proper Shipping Name, Hazard Class, ID Number, and Packing Group (if any))	10. Containers No.	10. Containers Type	11. Total Quantity	12. Unit Wt./Vol.	13. Waste Codes
X	1. Non-RCRA/Non DOT regulated wastewater	1	TT	36260	P	D001
	2.					
	3.					
	4.					

14. Special Handling Instructions and Additional Information
Profile ID: CES Internal Work
1) PA-3005 2) 3) 4)
This is to certify that the above-named materials are properly classified, described, packaged, marked and labeled, and are in proper condition for transportation according to the applicable regulations of the Department of Transportation. CES Job # - 88278

15. **GENERATOR'S/OFFEROR'S CERTIFICATION:** I hereby declare that the contents of this consignment are fully and accurately described above by the proper shipping name, and are classified, packaged, marked and labeled/placarded, and are in all respects in proper condition for transport according to applicable international and national governmental regulations. If export shipment and I am the Primary Exporter, I certify that the contents of this consignment conform to the terms of the attached EPA Acknowledgment of Consent.
I certify that the waste minimization statement identified in 40 CFR 262.27(a) (if I am a large quantity generator) or (b) (if I am a small quantity generator) is true.

Generator's/Offeror's Printed/Typed Name: Dennette Sartin Signature: Dennette Sartin Month 07 Day 27 Year 09

GENERATOR

16. International Shipments ☐ Import to U.S. ☐ Export from U.S. Port of entry/exit:
Transporter signature (for exports only): Date leaving U.S.:

INT'L

17. Transporter Acknowledgment of Receipt of Materials
Transporter 1 Printed/Typed Name: JUAN MENDOZA Signature: Month 07 Day 27 Year 09
Transporter 2 Printed/Typed Name Signature Month Day Year

TRANSPORTER

18. Discrepancy
18a. Discrepancy Indication Space ☐ Quantity ☐ Type ☐ Residue ☐ Partial Rejection ☐ Full Rejection
Manifest Reference Number:
18b. Alternate Facility (or Generator) U.S. EPA ID Number
Facility's Phone:
18c. Signature of Alternate Facility (or Generator) Month Day Year

19. Hazardous Waste Report Management Method Codes (i.e., codes for hazardous waste treatment, disposal, and recycling systems)
1. H141 2. 3. 4.

20. Designated Facility Owner or Operator: Certification of receipt of hazardous materials covered by the manifest except as noted in Item 18a
Printed/Typed Name Signature Month Day Year

DESIGNATED FACILITY

EPA Form 8700-22 (Rev. 3-05) Previous editions are obsolete. **GENERATOR'S INITIAL COPY**

258

Please print or type. (Form designed for use on elite (12-pitch) typewriter.) Form Approved. OMB No. 2050-0039

UNIFORM HAZARDOUS WASTE MANIFEST

1. Generator ID Number: TXR000079307
2. Page 1 of 1
3. Emergency Response Phone: (713) 676-1460
4. Manifest Tracking Number: 005593239 JJK

5. Generator's Name and Mailing Address
CES Environmental Services - Port Arthur
4904 Griggs Road
Houston, TX 77021
Generator's Phone: (713) 676-1460
State ID: 88585

Generator's Site Address (if different than mailing address)
CES Environmental Services - Port Arthur
2420 S. Gulfway Drive
Port Arthur, TX 77640
(713) 676-1460

6. Transporter 1 Company Name: CES Environmental Services, Inc.
State ID 30900
U.S. EPA ID Number: TXD008950461

7. Transporter 2 Company Name
U.S. EPA ID Number

8. Designated Facility Name and Site Address
CES Environmental Services, Inc.
4904 Griggs Rd.
Houston TX, 77021
Facility's Phone: (713) 676-1460
State ID 30900
U.S. EPA ID Number: TXD008950461

9a. HM	9b. U.S. DOT Description (including Proper Shipping Name, Hazard Class, ID Number, and Packing Group (if any))	10. Containers No.	10. Containers Type	11. Total Quantity	12. Unit Wt./Vol.	13. Waste Codes
X	1. Non-RCRA/Non DOT regulated wastewater	1	TT	36280	P	D001 D011
	2.					
	3.					
	4.					

14. Special Handling Instructions and Additional Information
Folder ID : CES Internal Work
1) PA-3005 2) 3) 4)
CES Job # - 89278

This is to certify that the above-named materials are properly classified, described, packaged, marked and labeled, and are in proper condition for transportation according to the applicable regulations of the Department of Transportation

15. **GENERATOR'S/OFFEROR'S CERTIFICATION:** I hereby declare that the contents of this consignment are fully and accurately described above by the proper shipping name, and are classified, packaged, marked and labeled/placarded, and are in all respects in proper condition for transport according to applicable international and national governmental regulations. If export shipment and I am the Primary Exporter, I certify that the contents of this consignment conform to the terms of the attached EPA Acknowledgment of Consent.
I certify that the waste minimization statement identified in 40 CFR 262.27(a) (if I am a large quantity generator) or (b) (if I am a small quantity generator) is true.

GENERATOR — Generator's/Offeror's Printed/Typed Name: Dennette Sartin — Signature: Dennette Sartin — Month 07 Day 27 Year 09

INT'L — 16. International Shipments ☐ Import to U.S. ☐ Export from U.S. Port of entry/exit:
Transporter signature (for exports only): Date leaving U.S.:

TRANSPORTER — 17. Transporter Acknowledgment of Receipt of Materials
Transporter 1 Printed/Typed Name: JUAN MENDOZA — Signature: [signature] — Month 07 Day 27 Year 09
Transporter 2 Printed/Typed Name: JACK GRIPSON — Signature: [signature] — Month 07 Day 28 Year 09

DESIGNATED FACILITY — 18. Discrepancy
18a. Discrepancy Indication Space ☐ Quantity ☐ Type ☐ Residue ☐ Partial Rejection ☐ Full Rejection
Manifest Reference Number:
18b. Alternate Facility (or Generator) U.S. EPA ID Number
Facility's Phone:
18c. Signature of Alternate Facility (or Generator) Month Day Year

19. Hazardous Waste Report Management Method Codes (i.e., codes for hazardous waste treatment, disposal, and recycling systems)
1. H141 2. 3. 4.

20. Designated Facility Owner or Operator: Certification of receipt of hazardous materials covered by the manifest except as noted in Item 18a
Printed/Typed Name: MILES ROOT — Signature: [signature] — Month 7 Day 29 Year 09

EPA Form 8700-22 (Rev. 3-05) Previous editions are obsolete. **DESIGNATED FACILITY TO GENERATOR**

258

Please print or type. (Form designed for use on elite (12-pitch) typewriter.) Form Approved. OMB No. 2050-0039

UNIFORM HAZARDOUS WASTE MANIFEST

1. Generator ID Number: TXR000079307
2. Page 1 of 1
3. Emergency Response Phone: (713) 676-1460
4. Manifest Tracking Number: 005593239 JJK

GENERATOR

5. Generator's Name and Mailing Address
CES Environmental Services - Port Arthur
4904 Griggs Road
Houston, TX 77021
Generator's Phone: (713) 676-1460
State ID: 88585

Generator's Site Address (if different than mailing address)
CES Environmental Services - Port Arthur
2420 S. Gulfway Drive
Port Arthur, TX 77640

6. Transporter 1 Company Name: CES Environmental Services, Inc. State ID 30900
U.S. EPA ID Number: TXD008950461

7. Transporter 2 Company Name
U.S. EPA ID Number

8. Designated Facility Name and Site Address
CES Environmental Services, Inc.
4904 Griggs Rd.
Houston TX, 77021
Facility's Phone: (713) 676-1460
State ID 30900
U.S. EPA ID Number: TXD008950461

9a. HM	9b. U.S. DOT Description (including Proper Shipping Name, Hazard Class, ID Number, and Packing Group (if any))	10. Containers No.	10. Containers Type	11. Total Quantity	12. Unit Wt./Vol.	13. Waste Codes
X	1. Non-RCRA/Non DOT regulated wastewater	1	TT	36280	P	00061011
	2.					
	3.					
	4.					

14. Special Handling Instructions and Additional Information
Folder ID : CES Internal Work
1) PA-3005 2) 3) 4)
CES Job # - 89278

This is to certify that the above-named materials are properly classified, described, packaged, marked and labeled, and are in proper condition for transportation according to the applicable regulations of the Department of Transportation.

15. **GENERATOR'S/OFFEROR'S CERTIFICATION:** I hereby declare that the contents of this consignment are fully and accurately described above by the proper shipping name, and are classified, packaged, marked and labeled/placarded, and are in all respects in proper condition for transport according to applicable international and national governmental regulations. If export shipment and I am the Primary Exporter, I certify that the contents of this consignment conform to the terms of the attached EPA Acknowledgment of Consent.
I certify that the waste minimization statement identified in 40 CFR 262.27(a) (if I am a large quantity generator) or (b) (if I am a small quantity generator) is true.

Generator's/Offeror's Printed/Typed Name: Dennette Sartin
Signature: Dennette Sartin
Month 07 Day 27 Year 09

INT'L

16. International Shipments ☐ Import to U.S. ☐ Export from U.S. Port of entry/exit:
Transporter signature (for exports only): Date leaving U.S.:

TRANSPORTER

17. Transporter Acknowledgment of Receipt of Materials
Transporter 1 Printed/Typed Name: JUAN MENDOZA
Signature:
Month 07 Day 27 Year 09
Transporter 2 Printed/Typed Name: JACK GIPSON
Signature:
Month 07 Day 27 Year 09

DESIGNATED FACILITY

18. Discrepancy
18a. Discrepancy Indication Space ☐ Quantity ☐ Type ☐ Residue ☐ Partial Rejection ☐ Full Rejection
Manifest Reference Number:
18b. Alternate Facility (or Generator) U.S. EPA ID Number
Facility's Phone:
18c. Signature of Alternate Facility (or Generator) Month Day Year

19. Hazardous Waste Report Management Method Codes (i.e., codes for hazardous waste treatment, disposal, and recycling systems)
1. H141 2. 3. 4.

20. Designated Facility Owner or Operator: Certification of receipt of hazardous materials covered by the manifest except as noted in Item 18a
Printed/Typed Name: MILES ROOT
Signature:
Month 7 Day 29 Year 09

EPA Form 8700-22 (Rev. 3-05) Previous editions are obsolete. **DESIGNATED FACILITY'S COPY**

EPAPA010000264

258

Please print or type. (Form designed for use on elite (12-pitch) typewriter.) Form Approved. OMB No. 2050-0039

UNIFORM HAZARDOUS WASTE MANIFEST

1. Generator ID Number: TXR000079307
2. Page 1 of 1
3. Emergency Response Phone: (713) 675-1460
4. Manifest Tracking Number: 005593239 JJK

5. Generator's Name and Mailing Address: CES Environmental Services - Port Arthur, 4904 Griggs Road, Houston, TX 77021 — State ID: 83595
Generator's Site Address (if different than mailing address): CES Environmental Services - Port Arthur, 2430 S. Gulfway Drive, Port Arthur, TX 77640
Generator's Phone: (713) 675-1460

6. Transporter 1 Company Name: CES Environmental Services, Inc. — State ID: 30900 — U.S. EPA ID Number: TXD008950461
7. Transporter 2 Company Name — U.S. EPA ID Number:

8. Designated Facility Name and Site Address: CES Environmental Services, Inc., 4904 Griggs Rd., Houston TX, 77021 — State ID: 30900
Facility's Phone: (713) 675-1460 — U.S. EPA ID Number: TXD008950461

9a. HM	9b. U.S. DOT Description (including Proper Shipping Name, Hazard Class, ID Number, and Packing Group (if any))	10. Containers No.	10. Containers Type	11. Total Quantity	12. Unit Wt./Vol.	13. Waste Codes
X	1. Non-RCRA/Non DOT regulated wastewater	1	TT	36260	P	0001001
	2.					
	3.					
	4.					

14. Special Handling Instructions and Additional Information
Folder ID : CES Internal Work
1) PA-3005 2) 3) 4)

This is to certify that the above-named materials are properly classified, described, packaged, marked and labeled, and are in proper condition for transportation according to the applicable regulations of the Department of Transportation. CES Job # - 83278

15. **GENERATOR'S/OFFEROR'S CERTIFICATION:** I hereby declare that the contents of this consignment are fully and accurately described above by the proper shipping name, and are classified, packaged, marked and labeled/placarded, and are in all respects in proper condition for transport according to applicable international and national governmental regulations. If export shipment and I am the Primary Exporter, I certify that the contents of this consignment conform to the terms of the attached EPA Acknowledgment of Consent.
I certify that the waste minimization statement identified in 40 CFR 262.27(a) (if I am a large quantity generator) or (b) (if I am a small quantity generator) is true.

Generator's/Offeror's Printed/Typed Name: Dennette Sartin — Signature: Dennette Sartin — Month 7 Day 27 Year 09

GENERATOR

INT'L

16. International Shipments ☐ Import to U.S. ☐ Export from U.S. Port of entry/exit:
Transporter signature (for exports only): Date leaving U.S.:

TRANSPORTER

17. Transporter Acknowledgment of Receipt of Materials
Transporter 1 Printed/Typed Name: JUAN MENDOZA — Signature: [signature] — Month 07 Day 27 Year 09
Transporter 2 Printed/Typed Name: JACK GARSON — Signature: [signature] — Month 07 Day 25 Year 09

DESIGNATED FACILITY

18. Discrepancy
18a. Discrepancy Indication Space ☐ Quantity ☐ Type ☐ Residue ☐ Partial Rejection ☐ Full Rejection
Manifest Reference Number:
18b. Alternate Facility (or Generator) — U.S. EPA ID Number
Facility's Phone:
18c. Signature of Alternate Facility (or Generator) — Month Day Year

19. Hazardous Waste Report Management Method Codes (i.e., codes for hazardous waste treatment, disposal, and recycling systems)
1. M141 2. 3. 4.

20. Designated Facility Owner or Operator: Certification of receipt of hazardous materials covered by the manifest except as noted in Item 18a
Printed/Typed Name: MILES ROOT — Signature: [signature] — Month 7 Day 29 Year 09

EPA Form 8700-22 (Rev. 3-05) Previous editions are obsolete. **TRANSPORTER'S COPY**

EPAPA010000265

METTLER TOLEDO T90 2.0.0
New titrator / Excellence Titrator

Serial No. 5128496284

Method: RSH Mercaptan sulfur **12/3/2008 2:55:02 PM**
Start time: **7/27/2009 9:10:58 AM**

Results

No.	Comment / ID	Start time	Sample size and results			
1/1	TRL 258	7/27/2009 9:10:58 AM		2.0822	g	
			R1 =	NaN	% as H2S	H2S Content
			R3 =	NaN	%Mercap no H2S	Mercaptan Content w/o H2S

Statistics

Rx	Name	n	Mean value	Unit	s	srel [%]
R1	H2S Content	1	NaN	% as H2S	NaN	NaN
R3	Mercaptan Content w/o H2S	1	NaN	%Mercap no H2S	NaN	NaN

(1) Modified
(2) Excluded
(3) Out of limits
(4) Resource expired
(5) srel above max srel
(6) srel above max srel for multiple determination
(7) Value out of limits, not saved in setup
(8) Sample data out of limits
(9) Standard evaluation used
(10) Result from buffer

CES Environmental Services, Inc.

4904 Griggs Road
Houston, TX 77021
Tel. (713) 676-1460
Fax. (713) 676-1676

Transportation Work Ticket

Folder ID : CES Internal Work

Date : 7/27/2009 **Manifest # :**

Client : CES Environmental Services - Port Arthur **Ticket :** 89278

Phone : 7136761460 **Consignee :** CES Environmental Services, Inc.

Transporter : CES Environmental Services, Inc.

Signature DSarta **Signature**

Leave CES Yard :		**Arrive At Destination**	11:30 AM
Arrive At Customer :	7:15	**Begin Unloading :**	
Begin Loading :		**Finish Unloading :**	
Finish Loading :		**Leave Destination :**	1:00 PM
Leave Customer :	9:45	**Arrive At CES Yard :**	3:00 PM

Customer PO #:

Total Hours:

CES Unload: ☐

Gross Weight :		**Ending Odometer :**	185878
Tare Weight :		**Begining Odometer :**	185688
Net Weight :	36280	**Total Miles :**	190

Driver : Mendoza, Juan **Tractor # :** 2001 **Tote # :**

Signature : **Trailer # :** 258 **Box # :**

Job Comments/Equipment :

White (CES Office) Yellow (CES Office / Billing) Pink (CES Office / IFTA) Golden Rod (Customer)

TH 2001

TR 258

DATE 7-27-09 NO. 636

PORT ARTHUR CHEMICAL ENVIRONMENTAL SERVICES
P.O. BOX 218
2420 SOUTH GULFWAY DRIVE
PORT ARTHUR, TEXAS 77640

PACES JOB # 89278

TICKET ID	636	
07/27/2009	07:19:38 am	
INBOUND WT	32700	lb
07/27/2009	09:22:03 am	
OUTBOUND WT	68980	lb
NET WT	36280	

DRIVER ON ☐ OFF ☑

WEIGHED BY

HOUSTON
HAS SIGNED
COPY
PLEASE SEND
PACES COPY
BACK BO

238

Please print or type. (Form designed for use on elite (12-pitch) typewriter.)

Form Approved. OMB No. 2050-0039

UNIFORM HAZARDOUS WASTE MANIFEST

1. Generator ID Number: TXR000079307
2. Page 1 of 1
3. Emergency Response Phone: (713) 676-1460
4. Manifest Tracking Number: 005593240 JJK

5. Generator's Name and Mailing Address
CES Environmental Services - Port Arthur
4904 Griggs Road
Houston, TX 77021
State ID: 88585
Generator's Phone: (713) 676-1460

Generator's Site Address (if different than mailing address)
CES Environmental Services - Port Arthur
2420 S. Gulfway Drive
Port Arthur, TX 77640
(713) 676-1460

6. Transporter 1 Company Name: CES Environmental Services, Inc.
State ID 30900
U.S. EPA ID Number: TXD008950461

7. Transporter 2 Company Name
U.S. EPA ID Number

8. Designated Facility Name and Site Address
CES Environmental Services, Inc.
4904 Griggs Rd.
Houston TX, 77021
Facility's Phone: (713) 676-1460
State ID 30900
U.S. EPA ID Number: TXD008950461

9a. HM	9b. U.S. DOT Description (including Proper Shipping Name, Hazard Class, ID Number, and Packing Group (if any))	10. Containers No.	10. Containers Type	11. Total Quantity	12. Unit Wt./Vol.	13. Waste Codes
X	1. Non-RCRA/Non DOT regulated wastewater	1	TT	5000	G	00081011
	2.					
	3.					
	4.					

14. Special Handling Instructions and Additional Information
Folder ID : CES Internal Work
1) PA-3005 2) 3) 4)
This is to certify that the above-named materials are properly classified, described, packaged, marked and labeled, and are in proper condition for transportation according to the applicable regulations of the Department of Transportation
CES Job # - 89290

15. **GENERATOR'S/OFFEROR'S CERTIFICATION:** I hereby declare that the contents of this consignment are fully and accurately described above by the proper shipping name, and are classified, packaged, marked and labeled/placarded, and are in all respects in proper condition for transport according to applicable international and national governmental regulations. If export shipment and I am the Primary Exporter, I certify that the contents of this consignment conform to the terms of the attached EPA Acknowledgment of Consent.
I certify that the waste minimization statement identified in 40 CFR 262.27(a) (if I am a large quantity generator) or (b) (if I am a small quantity generator) is true.

Generator's/Offeror's Printed/Typed Name: Dennette Sartin
Signature: Dennette Sartin
Month 7 Day 27 Year 09

GENERATOR

16. International Shipments ☐ Import to U.S. ☐ Export from U.S. Port of entry/exit:
Transporter signature (for exports only): Date leaving U.S.:

INT'L

17. Transporter Acknowledgment of Receipt of Materials
Transporter 1 Printed/Typed Name: Kevin Wilson
Signature: Kevin Wilson
Month 7 Day 27 Year 09
Transporter 2 Printed/Typed Name
Signature
Month Day Year

TRANSPORTER

18. Discrepancy
18a. Discrepancy Indication Space ☐ Quantity ☐ Type ☐ Residue ☐ Partial Rejection ☐ Full Rejection
Manifest Reference Number:
18b. Alternate Facility (or Generator)
U.S. EPA ID Number
Facility's Phone:
18c. Signature of Alternate Facility (or Generator)
Month Day Year

19. Hazardous Waste Report Management Method Codes (i.e., codes for hazardous waste treatment, disposal, and recycling systems)
1. H141 2. 3. 4.

20. Designated Facility Owner or Operator: Certification of receipt of hazardous materials covered by the manifest except as noted in Item 18a
Printed/Typed Name: SAM BROWN
Signature
Month 7 Day 27 Year 09

DESIGNATED FACILITY

EPA Form 8700-22 (Rev. 3-05) Previous editions are obsolete.

DESIGNATED FACILITY TO DESTINATION STATE (IF REQUIRED)

238

Please print or type. (Form designed for use on elite (12-pitch) typewriter.)

Form Approved. OMB No. 2050-0039

UNIFORM HAZARDOUS WASTE MANIFEST

1. Generator ID Number: TXR000079307
2. Page 1 of 1
3. Emergency Response Phone: (713) 676-1460
4. Manifest Tracking Number: 005593240 JJK

5. Generator's Name and Mailing Address
CES Environmental Services - Port Arthur
4904 Griggs Road
Houston, TX 77021
State ID: 88585
Generator's Phone: (713) 676-1460

Generator's Site Address (if different than mailing address)
CES Environmental Services - Port Arthur
2420 S. Gulfway Drive
Port Arthur, TX 77640
(713) 676-1460

6. Transporter 1 Company Name: CES Environmental Services, Inc.
State ID 30900
U.S. EPA ID Number: TXD008950461

7. Transporter 2 Company Name
U.S. EPA ID Number

8. Designated Facility Name and Site Address
CES Environmental Services, Inc.
4904 Griggs Rd.
Houston TX, 77021
State ID 30900
Facility's Phone: (713) 676-1460
U.S. EPA ID Number: TXD008950461

9a. HM	9b. U.S. DOT Description (including Proper Shipping Name, Hazard Class, ID Number, and Packing Group (if any))	10. Containers No.	10. Containers Type	11. Total Quantity	12. Unit Wt./Vol.	13. Waste Codes
	1. Non-RCRA/Non DOT regulated wastewater	1	TT	5000	G	00081011
	2.					
	3.					
	4.					

14. Special Handling Instructions and Additional Information
Folder ID : CES Internal Work
1) PA-3005 2) 3) 4)
CES Job # - 89290

This is to certify that the above-named materials are properly classified, described, packaged, marked and labeled, and are in proper condition for transportation according to the applicable regulations of the Department of Transportation.

15. **GENERATOR'S/OFFEROR'S CERTIFICATION:** I hereby declare that the contents of this consignment are fully and accurately described above by the proper shipping name, and are classified, packaged, marked and labeled/placarded, and are in all respects in proper condition for transport according to applicable international and national governmental regulations. If export shipment and I am the Primary Exporter, I certify that the contents of this consignment conform to the terms of the attached EPA Acknowledgment of Consent.
I certify that the waste minimization statement identified in 40 CFR 262.27(a) (if I am a large quantity generator) or (b) (if I am a small quantity generator) is true.

Generator's/Offeror's Printed/Typed Name: Dennette Sartin
Signature: Dennette Sartin
Month 7 Day 27 Year 09

16. International Shipments ☐ Import to U.S. ☐ Export from U.S. Port of entry/exit:
Transporter signature (for exports only): Date leaving U.S.:

17. Transporter Acknowledgment of Receipt of Materials
Transporter 1 Printed/Typed Name: Kevin Wilson
Signature:
Month 7 Day 27 Year 09
Transporter 2 Printed/Typed Name
Signature
Month Day Year

18. Discrepancy
18a. Discrepancy Indication Space ☐ Quantity ☐ Type ☐ Residue ☐ Partial Rejection ☐ Full Rejection
Manifest Reference Number:

18b. Alternate Facility (or Generator)
U.S. EPA ID Number
Facility's Phone:

18c. Signature of Alternate Facility (or Generator)
Month Day Year

19. Hazardous Waste Report Management Method Codes (i.e., codes for hazardous waste treatment, disposal, and recycling systems)
1. H141 2. 3. 4.

20. Designated Facility Owner or Operator: Certification of receipt of hazardous materials covered by the manifest except as noted in Item 18a
Printed/Typed Name: SAM BROWN
Signature:
Month 7 Day 27 Year 09

GENERATOR / INT'L / TRANSPORTER / DESIGNATED FACILITY

EPA Form 8700-22 (Rev. 3-05) Previous editions are obsolete.

DESIGNATED FACILITY TO GENERATOR STATE (IF REQUIRED)

GSIV 124105

Please print or type. (Form designed for use on elite (12-pitch) typewriter.)

Form Approved. OMB No. 2050-0039

UNIFORM HAZARDOUS WASTE MANIFEST

1. Generator ID Number: TXR000079307
2. Page 1 of 1
3. Emergency Response Phone: (713) 676-1460
4. Manifest Tracking Number: 005593245 JJK

GENERATOR

5. Generator's Name and Mailing Address: [illegible] Port Arthur
4901 Griggs Road
Houston, TX 77021
(713) 676-1460
State ID: [illegible]

Generator's Site Address (if different than mailing address): [illegible] Port Arthur
3420 S. Gulfway Drive
Port Arthur, TX 77640
(713) 676-1460

Generator's Phone:

6. Transporter 1 Company Name: [illegible] Environmental Services, Inc.
State ID: 30300
U.S. EPA ID Number: TXD008950461

7. Transporter 2 Company Name:
U.S. EPA ID Number:

8. Designated Facility Name and Site Address: [illegible] Environmental Services, Inc.
4901 Griggs Rd.
Houston TX, 77021
(713) 676-1460
State ID: 30300
U.S. EPA ID Number: TXD008950461

Facility's Phone:

9a. HM	9b. U.S. DOT Description (including Proper Shipping Name, Hazard Class, ID Number, and Packing Group (if any))	10. Containers No.	10. Containers Type	11. Total Quantity	12. Unit Wt./Vol.	13. Waste Codes
	1. Non-RCRA/Non DOT regulated wastewater	1	TT	5000	G	D001
	2.					
	3.					
	4.					

14. Special Handling Instructions and Additional Information
Refer to [illegible] Manifest Form
1) PR-3005 2) 3) 4)

This is to certify that the above-named materials are properly classified, described, packaged, marked and labeled, and are in proper condition for transportation according to the applicable regulations of the Department of Transportation. GEP Inc. # - 68321

15. **GENERATOR'S/OFFEROR'S CERTIFICATION:** I hereby declare that the contents of this consignment are fully and accurately described above by the proper shipping name, and are classified, packaged, marked and labeled/placarded, and are in all respects in proper condition for transport according to applicable international and national governmental regulations. If export shipment and I am the Primary Exporter, I certify that the contents of this consignment conform to the terms of the attached EPA Acknowledgment of Consent.
I certify that the waste minimization statement identified in 40 CFR 262.27(a) (if I am a large quantity generator) or (b) (if I am a small quantity generator) is true.

Generator's/Offeror's Printed/Typed Name: Dennis Smith
Signature:
Month: 7 Day: 20 Year: 09

INT'L

16. International Shipments ☐ Import to U.S. ☐ Export from U.S. Port of entry/exit:
Transporter signature (for exports only): Date leaving U.S.:

TRANSPORTER

17. Transporter Acknowledgment of Receipt of Materials
Transporter 1 Printed/Typed Name: JACK GIBSON
Signature: Jack Gibson
Month: 7 Day: 13 Year: 09
Transporter 2 Printed/Typed Name:
Signature:
Month: Day: Year:

DESIGNATED FACILITY

18. Discrepancy
18a. Discrepancy Indication Space ☐ Quantity ☐ Type ☐ Residue ☐ Partial Rejection ☐ Full Rejection
Manifest Reference Number:
18b. Alternate Facility (or Generator) U.S. EPA ID Number
Facility's Phone:
18c. Signature of Alternate Facility (or Generator) Month: Day: Year:

19. Hazardous Waste Report Management Method Codes (i.e., codes for hazardous waste treatment, disposal, and recycling systems)
1. H141 2. 3. 4.

20. Designated Facility Owner or Operator: Certification of receipt of hazardous materials covered by the manifest except as noted in Item 18a
Printed/Typed Name Signature Month Day Year

EPA Form 8700-22 (Rev. 3-05) Previous editions are obsolete.

GENERATOR'S INITIAL COPY

EPAPA010000272

239

Please print or type. (Form designed for use on elite (12-pitch) typewriter.)

Form Approved. OMB No. 2050-0039

UNIFORM HAZARDOUS WASTE MANIFEST

1. Generator ID Number: TXR000079307
2. Page 1 of
3. Emergency Response Phone: (713) 676-1460
4. Manifest Tracking Number: 005593232 JJK

5. Generator's Name and Mailing Address
CES Environmental Services - Port Arthur
4904 Griggs Road
Houston, TX 77021
State ID: 88582
Generator's Phone: (713) 676-1460

Generator's Site Address (if different than mailing address)
CES Environmental Services - Port Arthur
2420 S. Gulfway Drive
Port Arthur, TX 77640

6. Transporter 1 Company Name: CES Environmental Services, Inc.
State ID: 30900
U.S. EPA ID Number: TXD000050461

7. Transporter 2 Company Name
U.S. EPA ID Number

8. Designated Facility Name and Site Address
CES Environmental Services, Inc.
4904 Griggs Rd.
Houston, TX 77021
State ID: 30900
Facility's Phone: (713) 676-1460
U.S. EPA ID Number: TXD000050461

9a. HM	9b. U.S. DOT Description (including Proper Shipping Name, Hazard Class, ID Number, and Packing Group (if any))	10. Containers No.	10. Containers Type	11. Total Quantity	12. Unit Wt./Vol.	13. Waste Codes
X	1. Non-RCRA/Non DOT regulated wastewater	1	TT	5000	G	D001D011
	2.					
	3.					
	4.					

14. Special Handling Instructions and Additional Information
Folder ID: CES Internal Work
1) PA-3005 2) 3) 4)
This is to certify that the above-named materials are properly classified, described, packaged, marked and labeled, and are in proper condition for transportation according to the applicable regulations of the Department of Transportation. CES Job # - 89171

15. **GENERATOR'S/OFFEROR'S CERTIFICATION:** I hereby declare that the contents of this consignment are fully and accurately described above by the proper shipping name, and are classified, packaged, marked and labeled/placarded, and are in all respects in proper condition for transport according to applicable international and national governmental regulations. If export shipment and I am the Primary Exporter, I certify that the contents of this consignment conform to the terms of the attached EPA Acknowledgment of Consent.
I certify that the waste minimization statement identified in 40 CFR 262.27(a) (if I am a large quantity generator) or (b) (if I am a small quantity generator) is true.

Generator's/Offeror's Printed/Typed Name: [illegible] Signature: [illegible] Month 7 Day 22 Year 09

16. International Shipments ☐ Import to U.S. ☐ Export from U.S. Port of entry/exit:
Transporter signature (for exports only): Date leaving U.S.:

17. Transporter Acknowledgment of Receipt of Materials
Transporter 1 Printed/Typed Name: JACK GIPSON Signature: [illegible] Month 7 Day 22 Year 09
Transporter 2 Printed/Typed Name: Signature: Month Day Year

18. Discrepancy
18a. Discrepancy Indication Space ☐ Quantity ☐ Type ☐ Residue ☐ Partial Rejection ☐ Full Rejection
Manifest Reference Number:

18b. Alternate Facility (or Generator) U.S. EPA ID Number
Facility's Phone:

18c. Signature of Alternate Facility (or Generator) Month Day Year

19. Hazardous Waste Report Management Method Codes (i.e., codes for hazardous waste treatment, disposal, and recycling systems)
1. H141 2. 3. 4.

20. Designated Facility Owner or Operator: Certification of receipt of hazardous materials covered by the manifest except as noted in Item 18a
Printed/Typed Name: SAM BROWN Signature: [illegible] Month 7 Day 22 Year 09

GENERATOR | INT'L | TRANSPORTER | DESIGNATED FACILITY

EPA Form 8700-22 (Rev. 3-05) Previous editions are obsolete.

TRANSPORTER'S COPY

EPAPA010000273

T# 258

Please print or type. (Form designed for use on elite (12-pitch) typewriter.)

Form Approved. OMB No. 2050-0039

UNIFORM HAZARDOUS WASTE MANIFEST

1. Generator ID Number: TXR000079307
2. Page 1 of
3. Emergency Response Phone: (713) 676-1460
4. Manifest Tracking Number: 005593225 JJK

5. Generator's Name and Mailing Address
CES Environmental Services - Port Arthur
4904 Griggs Road
Houston, TX 77021
Generator's Phone:

Generator's Site Address (if different than mailing address)
State ID: 10000
CES Environmental Services - Port Arthur
2400 S. Gulfway Drive
Port Arthur, TX 77640

6. Transporter 1 Company Name: CES Environmental Services, Inc.
State ID: 10000
U.S. EPA ID Number: TXD000815461

7. Transporter 2 Company Name
U.S. EPA ID Number

8. Designated Facility Name and Site Address
CES Environmental Services, Inc.
4904 Griggs Rd.
Houston TX, 77021
Facility's Phone: (713) 676-1460
State ID: 10000
U.S. EPA ID Number: TXD000815461

9a. HM	9b. U.S. DOT Description (Including Proper Shipping Name, Hazard Class, ID Number, and Packing Group (if any))	10. Containers No.	10. Containers Type	11. Total Quantity	12. Unit Wt./Vol.	13. Waste Codes
X	1. non-RCRA/Non DOT regulated liner waste (per 49 CFR 173.150 (a)(2))	1	TT	500	G	[illegible]
	2.					
	3.					
	4.					

14. Special Handling Instructions and Additional Information
Folder ID : CES Internal Work
1) PA-325 2) 3) 4)
This is to certify that the above named materials are properly classified, described, packaged, marked and labeled, and are in proper condition for transportation according to the applicable regulations of the Department of Transportation. CES Job # - 65013

15. **GENERATOR'S/OFFEROR'S CERTIFICATION:** I hereby declare that the contents of this consignment are fully and accurately described above by the proper shipping name, and are classified, packaged, marked and labeled/placarded, and are in all respects in proper condition for transport according to applicable international and national governmental regulations. If export shipment and I am the Primary Exporter, I certify that the contents of this consignment conform to the terms of the attached EPA Acknowledgment of Consent.
I certify that the waste minimization statement identified in 40 CFR 262.27(a) (if I am a large quantity generator) or (b) (if I am a small quantity generator) is true.

Generator's/Offeror's Printed/Typed Name: DO CUNDERLAND
Signature: [signature]
Month: 7 Day: 20 Year: 09

INT'L

16. International Shipments ☐ Import to U.S. ☐ Export from U.S. Port of entry/exit:
Transporter signature (for exports only): Date leaving U.S.:

TRANSPORTER

17. Transporter Acknowledgment of Receipt of Materials
Transporter 1 Printed/Typed Name: JUAN MENDOZA
Signature: [signature]
Month: 7 Day: 20 Year: 09
Transporter 2 Printed/Typed Name
Signature
Month Day Year

DESIGNATED FACILITY

18. Discrepancy
18a. Discrepancy Indication Space ☐ Quantity ☐ Type ☐ Residue ☐ Partial Rejection ☐ Full Rejection
Manifest Reference Number:
18b. Alternate Facility (or Generator)
U.S. EPA ID Number
Facility's Phone:
18c. Signature of Alternate Facility (or Generator)
Month Day Year

19. Hazardous Waste Report Management Method Codes (i.e., codes for hazardous waste treatment, disposal, and recycling systems)

1.	2.	3.	4.
H141			

20. Designated Facility Owner or Operator: Certification of receipt of hazardous materials covered by the manifest except as noted in Item 18a
Printed/Typed Name
Signature
Month Day Year

EPA Form 8700-22 (Rev. 3-05) Previous editions are obsolete.

GENERATOR'S INITIAL COPY

EPAPA010000274

TB 125

Please print or type. (Form designed for use on elite (12-pitch) typewriter.) Form Approved. OMB No. 2050-0039

UNIFORM HAZARDOUS WASTE MANIFEST

1. Generator ID Number	2. Page 1 of	3. Emergency Response Phone	4. Manifest Tracking Number
TXR000079307	1	(713) 676-1460	005593241 JJK

5. Generator's Name and Mailing Address
CDS Environmental Services - Port Arthur State ID 30330
4904 Griggs Road
Houston, TX 77021
Generator's Phone: (713) 676-1460

Generator's Site Address (if different than mailing address)
CDS Environmental Services - Port Arthur
2400 S. Gulfway Drive
Port Arthur, TX 77640
(713) 676-1460

6. Transporter 1 Company Name
CDS Environmental Services, Inc. State ID 30330
U.S. EPA ID Number TXD008930161

7. Transporter 2 Company Name
U.S. EPA ID Number

8. Designated Facility Name and Site Address
CDS Environmental Services, Inc. State ID 30330
4904 Griggs Rd.
Houston TX, 77021
Facility's Phone: (713) 676-1460
U.S. EPA ID Number TXD008930161

9a. HM	9b. U.S. DOT Description (including Proper Shipping Name, Hazard Class, ID Number, and Packing Group (if any))	10. Containers No.	10. Containers Type	11. Total Quantity	12. Unit Wt./Vol.	13. Waste Codes
X	1. Non-RCRA Non DOT regulated waste-water	1	TT	41,100	P	D001
	2.					
	3.					
	4.					

14. Special Handling Instructions and Additional Information
Please do not remove labels.
This is to certify that the above named materials are properly classified, described, packaged, marked and labeled, and are in proper condition for transportation according to the applicable regulations of the Department of Transportation. CES Job # - 69325

15. **GENERATOR'S/OFFEROR'S CERTIFICATION:** I hereby declare that the contents of this consignment are fully and accurately described above by the proper shipping name, and are classified, packaged, marked and labeled/placarded, and are in all respects in proper condition for transport according to applicable international and national governmental regulations. If export shipment and I am the Primary Exporter, I certify that the contents of this consignment conform to the terms of the attached EPA Acknowledgment of Consent.
I certify that the waste minimization statement identified in 40 CFR 262.27(a) (if I am a large quantity generator) or (b) (if I am a small quantity generator) is true.

Generator's/Offeror's Printed/Typed Name: Dennette Sutton | Signature | Month 7 | Day 27 | Year 09

INT'L

16. International Shipments ☐ Import to U.S. ☐ Export from U.S. Port of entry/exit:
Transporter signature (for exports only): Date leaving U.S.:

TRANSPORTER

17. Transporter Acknowledgment of Receipt of Materials
Transporter 1 Printed/Typed Name: Juan Mendoza | Signature | Month 7 | Day 27 | Year 09
Transporter 2 Printed/Typed Name | Signature | Month | Day | Year

DESIGNATED FACILITY

18. Discrepancy
18a. Discrepancy Indication Space ☐ Quantity ☐ Type ☐ Residue ☐ Partial Rejection ☐ Full Rejection
Manifest Reference Number:
18b. Alternate Facility (or Generator) U.S. EPA ID Number
Facility's Phone:
18c. Signature of Alternate Facility (or Generator) | Month | Day | Year

19. Hazardous Waste Report Management Method Codes (i.e., codes for hazardous waste treatment, disposal, and recycling systems)
1. H141 | 2. | 3. | 4.

20. Designated Facility Owner or Operator: Certification of receipt of hazardous materials covered by the manifest except as noted in Item 18a
Printed/Typed Name: Sam Brown | Signature | Month 7 | Day 27 | Year 09

EPA Form 8700-22 (Rev. 3-05) Previous editions are obsolete. **GENERATOR'S INITIAL COPY**

CES Environmental Services, Inc.

4904 Griggs Road
Houston, TX 77021
Tel. (713) 676-1460
Fax. (713) 676-1676

Transportation Work Ticket

Folder ID : CES Internal Work

Date : 7/27/2009 **Manifest # :**

Client : CES Environmental Services - Port Arthur **Ticket :** 89325

Phone : 7136761460 **Consignee :** CES Environmental Services, Inc.

Transporter : CES Environmental Services, Inc.

Signature Denette Sartin **Signature**

Leave CES Yard :		**Arrive At Destination**	6:30
Arrive At Customer :	3:00	**Begin Unloading :**	
Begin Loading :	P/M	**Finish Unloading :**	
Finish Loading :		**Leave Destination :**	7:15
Leave Customer :	4:30	**Arrive At CES Yard :**	

Customer PO #:

Total Hours:

CES Unload: ☐

Gross Weight :		**Ending Odometer :**	189973
Tare Weight :		**Begining Odometer :**	189878
Net Weight :		**Total Miles :**	95

Driver : Mendoza, Juan **Tractor # :** 2001 **Tote # :**

Signature : **Trailer # :** 225 **Box # :**

Job Comments/Equipment : Drop Trailer on Line.

White (CES Office) Yellow (CES Office / Billing) Pink (CES Office / IFTA) Golden Rod (Customer)

2001
225

DATE 7-27-09 NO. 638

PORT ARTHUR CHEMICAL ENVIRONMENTAL SERVICES
P.O. BOX 218
2420 SOUTH GULFWAY DRIVE
PORT ARTHUR, TEXAS 77640

PACES JOB # 89325

TICKET ID	638	
07/27/2009	02:48:58 pm	
INBOUND WT	29300	lb
07/27/2009	04:17:53 pm	
OUTBOUND WT	70400	lb
NET WT	41100	

DRIVER ON ☐ OFF ☑

WEIGHED BY L James

TT # 420

Please print or type. (Form designed for use on elite (12-pitch) typewriter.) Form Approved. OMB No. 2050-0039

UNIFORM HAZARDOUS WASTE MANIFEST

1. Generator ID Number: TXR000079307
2. Page 1 of
3. Emergency Response Phone: (713) 676-1460
4. Manifest Tracking Number: **005593222 JJK**

5. Generator's Name and Mailing Address
CES Environmental Services - Port Arthur State ID: 85585
4904 Griggs Road
Houston, TX 77021
Generator's Phone:

Generator's Site Address (if different than mailing address)
CES Environmental Services - Port Arthur
2420 S. Gulfway Drive
Port Arthur, TX 77640

6. Transporter 1 Company Name: CES Environmental Services, Inc. State ID: 30900
U.S. EPA ID Number: TXD008950461

7. Transporter 2 Company Name
U.S. EPA ID Number

8. Designated Facility Name and Site Address
CES Environmental Services, Inc. State ID: 30900
4904 Griggs Rd
Houston TX, 77021
Facility's Phone: (713) 676-1460
U.S. EPA ID Number: TXD008950461

9a. HM	9b. U.S. DOT Description (including Proper Shipping Name, Hazard Class, ID Number, and Packing Group (if any))	10. Containers No.	10. Containers Type	11. Total Quantity	12. Unit Wt./Vol.	13. Waste Codes
X	1. non-RCRA,Non DOT regulated rinse water (per 49 CFR 173.150 (e)(2))	1	TT	5000	G	D001 D011
	2.					
	3.					
	4.					

14. Special Handling Instructions and Additional Information
Profile ID : CES Internal Work
1) PA-3005 2) 3) 4)
This is to certify that the above-named materials are properly classified, described, packaged, marked and labeled, and are in proper condition for transportation according to the applicable regulations of the Department of Transportation. CES Job # - 85585

15. **GENERATOR'S/OFFEROR'S CERTIFICATION:** I hereby declare that the contents of this consignment are fully and accurately described above by the proper shipping name, and are classified, packaged, marked and labeled/placarded, and are in all respects in proper condition for transport according to applicable international and national governmental regulations. If export shipment and I am the Primary Exporter, I certify that the contents of this consignment conform to the terms of the attached EPA Acknowledgment of Consent.
I certify that the waste minimization statement identified in 40 CFR 262.27(a) (if I am a large quantity generator) or (b) (if I am a small quantity generator) is true.

Generator's/Offeror's Printed/Typed Name: Bu Ramsburg Signature: Bu Month 7 Day 20 Year 09

16. International Shipments ☐ Import to U.S. ☐ Export from U.S. Port of entry/exit:
Transporter signature (for exports only): Date leaving U.S.:

17. Transporter Acknowledgment of Receipt of Materials
Transporter 1 Printed/Typed Name: Robert Hickman Signature: Robert Hickman Month 07 Day 20 Year 09
Transporter 2 Printed/Typed Name Signature Month Day Year

18. Discrepancy
18a. Discrepancy Indication Space ☐ Quantity ☐ Type ☐ Residue ☐ Partial Rejection ☐ Full Rejection
Manifest Reference Number:
18b. Alternate Facility (or Generator) U.S. EPA ID Number
Facility's Phone:
18c. Signature of Alternate Facility (or Generator) Month Day Year

19. Hazardous Waste Report Management Method Codes (i.e., codes for hazardous waste treatment, disposal, and recycling systems)
1. H141 2. 3. 4.

20. Designated Facility Owner or Operator: Certification of receipt of hazardous materials covered by the manifest except as noted in Item 18a
Printed/Typed Name: Julius Prantil Signature: Julius Prantil Month 7 Day 20 Year 09

EPA Form 8700-22 (Rev. 3-05) Previous editions are obsolete. **TRANSPORTER'S COPY**

EPAPA010000278

CES Environmental Services, Inc.

4904 Griggs Road
Houston, TX 77021
Tel. (713) 678-1460
Fax. (713) 678-1678

Transportation Work Ticket

Folder ID : CES Internal Work

Date : 7/20/2009 **Manifest # :** 005593222 JJK

Client : CES Environmental Services - Port Arthur **Ticket :** 89885

Phone : 7136761460 **Consignee :** CES Environmental Services, Inc.

Transporter : CES Environmental Services, Inc.

Signature Bo Lambertino **Signature**

Leave CES Yard :	0500	**Arrive At Destination**	
Arrive At Customer :	0640	**Begin Unloading :**	
Begin Loading :	0700	**Finish Unloading :**	
Finish Loading :	0715	**Leave Destination :**	
Leave Customer :	0720	**Arrive At CES Yard :**	

Customer PO #:

Total Hours:

CES Unload: ☐

Gross Weight :		**Ending Odometer :**	
Tare Weight :		**Begining Odometer :**	
Net Weight :		**Total Miles :**	

Driver : Hickman, Robert **Tractor # :** 293 **Tote # :**

Signature : Robert Hickman **Trailer # :** ~~258~~ 420 **Box # :**

Job Comments/Equipment :

White (CES Office) Yellow (CES Office / Billing) Pink (CES Office / IFTA) Golden Rod (Customer)

TT # 420

Please print or type. (Form designed for use on elite (12-pitch) typewriter.)

Form Approved. OMB No. 2050-0039

UNIFORM HAZARDOUS WASTE MANIFEST

1. Generator ID Number: TXR000070307
2. Page 1 of
3. Emergency Response Phone: (713) 676-1460
4. Manifest Tracking Number: **005593222 JJK**

5. Generator's Name and Mailing Address
CES Environmental Services - Port Arthur
4914 Griggs Road
Houston, TX 77021
State ID: 88085
Generator's Phone: (713) 676-1460

Generator's Site Address (if different than mailing address)
CES Environmental Services - Port Arthur
2430 S. Gulfway Drive
Port Arthur, TX 77640
(713) 676-1460

6. Transporter 1 Company Name: CES Environmental Services, Inc. State ID: 30900
U.S. EPA ID Number: TXD008950461

7. Transporter 2 Company Name
U.S. EPA ID Number

8. Designated Facility Name and Site Address
CES Environmental Services, Inc.
4914 Griggs Rd.
Houston TX, 77021
State ID: 30900
Facility's Phone: (713) 676-1460
U.S. EPA ID Number: TXD008950461

9a. HM	9b. U.S. DOT Description (including Proper Shipping Name, Hazard Class, ID Number, and Packing Group (if any))	10. Containers No.	10. Containers Type	11. Total Quantity	12. Unit Wt./Vol.	13. Waste Codes
X	1. non-RCRA,Non DOT regulated rinse water (per 49 CFR 173.150 (e)(2))	1	TT	5000	G	0001011
	2.					
	3.					
	4.					

14. Special Handling Instructions and Additional Information
Folder ID : CES Internal Work
This is to certify that the above-named materials are properly classified, described, packaged, marked and labeled, and are in proper condition for transportation according to the applicable regulations of the Department of Transportation. CES Job # - 88085
1) PX-3909 2) 3) 4)

15. **GENERATOR'S/OFFEROR'S CERTIFICATION:** I hereby declare that the contents of this consignment are fully and accurately described above by the proper shipping name, and are classified, packaged, marked and labeled/placarded, and are in all respects in proper condition for transport according to applicable international and national governmental regulations. If export shipment and I am the Primary Exporter, I certify that the contents of this consignment conform to the terms of the attached EPA Acknowledgment of Consent.
I certify that the waste minimization statement identified in 40 CFR 262.27(a) (if I am a large quantity generator) or (b) (if I am a small quantity generator) is true.

Generator's/Offeror's Printed/Typed Name: Dr Cumberlin
Signature:
Month 07 Day 20 Year 09

16. International Shipments ☐ Import to U.S. ☐ Export from U.S. Port of entry/exit:
Transporter signature (for exports only): Date leaving U.S.:

17. Transporter Acknowledgment of Receipt of Materials
Transporter 1 Printed/Typed Name: Robert Hickman
Signature: Robert Hickman
Month 07 Day 20 Year 09
Transporter 2 Printed/Typed Name
Signature
Month Day Year

18. Discrepancy
18a. Discrepancy Indication Space ☐ Quantity ☐ Type ☐ Residue ☐ Partial Rejection ☐ Full Rejection
Manifest Reference Number:

18b. Alternate Facility (or Generator)
U.S. EPA ID Number
Facility's Phone:

18c. Signature of Alternate Facility (or Generator)
Month Day Year

19. Hazardous Waste Report Management Method Codes (i.e., codes for hazardous waste treatment, disposal, and recycling systems)
1. H141 2. 3. 4.

20. Designated Facility Owner or Operator: Certification of receipt of hazardous materials covered by the manifest except as noted in Item 18a
Printed/Typed Name
Signature
Month Day Year

GENERATOR

INT'L

TRANSPORTER

DESIGNATED FACILITY

EPA Form 8700-22 (Rev. 3-05) Previous editions are obsolete.

GENERATOR'S INITIAL COPY

Please print or type. (Form designed for use on elite (12-pitch) typewriter.)

Form Approved. OMB No. 2050-0039

UNIFORM HAZARDOUS WASTE MANIFEST

1. Generator ID Number: TXR000079307
2. Page 1 of 1
3. Emergency Response Phone: (713) 675-1460
4. Manifest Tracking Number: **005593224 JJK**

5. Generator's Name and Mailing Address
CES Environmental Services - Port Arthur
4904 Griggs Road
Houston, TX 77021
State ID: 36585
Generator's Phone: (713) 675-1460

Generator's Site Address (if different than mailing address)
CES Environmental Services - Port Arthur
2420 S. Gulfway Drive
Port Arthur, TX 77640

6. Transporter 1 Company Name: CES Environmental Services, Inc.
State ID: 30200
U.S. EPA ID Number: TXD000805046

7. Transporter 2 Company Name
U.S. EPA ID Number

8. Designated Facility Name and Site Address
CES Environmental Services, Inc.
4904 Griggs Rd.
Houston TX, 77021
State ID: 30200
Facility's Phone: (713) 675-1460
U.S. EPA ID Number: TXD000805046

9a. HM	9b. U.S. DOT Description (including Proper Shipping Name, Hazard Class, ID Number, and Packing Group (if any))	10. Containers No.	10. Containers Type	11. Total Quantity	12. Unit Wt./Vol.	13. Waste Codes
X	1. non-RCRA/Non DOT regulated rinse water (per 49 CFR 173.150 (a)(2))	1	TT	5000	G	D008,D011
	2.					
	3.					
	4.					

14. Special Handling Instructions and Additional Information
Folder ID : CES Internal Work
1) PA-3005 2) 3) 4)

This is to certify that the above-named materials are properly classified, described, packaged, marked and labeled, and are in proper condition for transportation according to the applicable regulations of the Department of Transportation. CES Job # - 85686

15. **GENERATOR'S/OFFEROR'S CERTIFICATION:** I hereby declare that the contents of this consignment are fully and accurately described above by the proper shipping name, and are classified, packaged, marked and labeled/placarded, and are in all respects in proper condition for transport according to applicable international and national governmental regulations. If export shipment and I am the Primary Exporter, I certify that the contents of this consignment conform to the terms of the attached EPA Acknowledgment of Consent.
I certify that the waste minimization statement identified in 40 CFR 262.27(a) (if I am a large quantity generator) or (b) (if I am a small quantity generator) is true.

Generator's/Offeror's Printed/Typed Name: Bo Cumberland
Signature:
Month 7 Day 20 Year 09

INT'L

16. International Shipments ☐ Import to U.S. ☐ Export from U.S. Port of entry/exit:
Transporter signature (for exports only): Date leaving U.S.:

TRANSPORTER

17. Transporter Acknowledgment of Receipt of Materials
Transporter 1 Printed/Typed Name: Carlos Rosales
Signature:
Month 7 Day 20 Year 09
Transporter 2 Printed/Typed Name
Signature
Month Day Year

DESIGNATED FACILITY

18. Discrepancy
18a. Discrepancy Indication Space ☐ Quantity ☐ Type ☐ Residue ☐ Partial Rejection ☐ Full Rejection
Manifest Reference Number:

18b. Alternate Facility (or Generator)
U.S. EPA ID Number
Facility's Phone:

18c. Signature of Alternate Facility (or Generator)
Month Day Year

19. Hazardous Waste Report Management Method Codes (i.e., codes for hazardous waste treatment, disposal, and recycling systems)

1.	2.	3.	4.
H141			

20. Designated Facility Owner or Operator: Certification of receipt of hazardous materials covered by the manifest except as noted in Item 18a
Printed/Typed Name
Signature
Month Day Year

EPA Form 8700-22 (Rev. 3-05) Previous editions are obsolete.

GENERATOR'S INITIAL COPY

EPAPA010000281

CES Environmental Services, Inc.

4904 Griggs Road
Houston, TX 77021
Tel. (713) 676-1460
Fax. (713) 676-1676

Transportation Work Ticket

Folder ID : CES Internal Work

Date : 7/20/2009 **Manifest # :** 005593224

Client : CES Environmental Services - Port Arthur **Ticket :** 89066

Phone : 7136761460 **Consignee :** CES Environmental Services, Inc.

Transporter : CES Environmental Services, Inc.

Signature **Signature**

Leave CES Yard :		**Arrive At Destination**	
Arrive At Customer :	1:30	**Begin Unloading :**	
Begin Loading :	10:00	**Finish Unloading :**	
Finish Loading :	10:45	**Leave Destination :**	
Leave Customer :	11:00	**Arrive At CES Yard :**	

Customer PO #:

Total Hours:

CES Unload: ☐

Gross Weight :		**Ending Odometer :**	
Tare Weight :		**Begining Odometer :**	
Net Weight :	Rollof	**Total Miles :**	7 20 09

Driver : Rosales, Candido **Tractor # :** 210 **Tote # :**

Signature : **Trailer # :** 238 **Box # :**

Job Comments/Equipment :

White (CES Office) Yellow (CES Office / Billing) Pink (CES Office / IFTA) Golden Rod (Customer)

7AL 271

Please print or type. (Form designed for use on elite (12-pitch) typewriter.)

Form Approved. OMB No. 2050-0039

UNIFORM HAZARDOUS WASTE MANIFEST

1. Generator ID Number: TXR000079307
2. Page 1 of 1
3. Emergency Response Phone
4. Manifest Tracking Number: 005803896 JJK

5. Generator's Name and Mailing Address
CES Environmental Services - Port Arthur
4904 Griggs Road
Houston, TX 77021
Generator's Phone:
State ID: 88585

Generator's Site Address (if different than mailing address)
CES Environmental Services - Port Arthur
2420 Gulfway Drive
Port Arthur, TX 77640

6. Transporter 1 Company Name: CES Environmental Services, Inc.
State ID 30900
U.S. EPA ID Number: TXD008950461

7. Transporter 2 Company Name
U.S. EPA ID Number

8. Designated Facility Name and Site Address
Newark Environmental Services, LLC
2640 Wilber Rd
Winnie, TX, 77665
Facility's Phone: (409) 754-3119
State ID 39098
U.S. EPA ID Number: N/A

9a. HM	9b. U.S. DOT Description (including Proper Shipping Name, Hazard Class, ID Number, and Packing Group (if any))	10. Containers No.	10. Containers Type	11. Total Quantity	12. Unit Wt./Vol.	13. Waste Codes
	1. Non-RCRA/Non DOT regulated wastewater		TT	5000	G	00011131
	2.					
	3.					
	4.					

14. Special Handling Instructions and Additional Information
Profile ID: CES Environmental (CES - Port Arthur)
Class 1, Non-hazardous Wastewater
PACES SAMPLE ID # _____ CES Job # - 88670
1) 092509118DBH 2) 3) 4)

15. **GENERATOR'S/OFFEROR'S CERTIFICATION:** I hereby declare that the contents of this consignment are fully and accurately described above by the proper shipping name, and are classified, packaged, marked and labeled/placarded, and are in all respects in proper condition for transport according to applicable international and national governmental regulations. If export shipment and I am the Primary Exporter, I certify that the contents of this consignment conform to the terms of the attached EPA Acknowledgment of Consent.
I certify that the waste minimization statement identified in 40 CFR 262.27(a) (if I am a large quantity generator) or (b) (if I am a small quantity generator) is true.

Generator's/Offeror's Printed/Typed Name: Demetto Santa
Signature: Demetto Santa
Month 7 Day 8 Year 09

16. International Shipments ☐ Import to U.S. ☐ Export from U.S. Port of entry/exit:
Transporter signature (for exports only): Date leaving U.S.:

17. Transporter Acknowledgment of Receipt of Materials
Transporter 1 Printed/Typed Name: Signature: Month 7 Day 8 Year 09
Transporter 2 Printed/Typed Name: Signature: Month Day Year

18. Discrepancy
18a. Discrepancy Indication Space ☐ Quantity ☐ Type ☐ Residue ☐ Partial Rejection ☐ Full Rejection
Manifest Reference Number:

18b. Alternate Facility (or Generator) U.S. EPA ID Number
Facility's Phone:

18c. Signature of Alternate Facility (or Generator) Month Day Year

19. Hazardous Waste Report Management Method Codes (i.e., codes for hazardous waste treatment, disposal, and recycling systems)
1. H134 2. 3. 4.

20. Designated Facility Owner or Operator: Certification of receipt of hazardous materials covered by the manifest except as noted in Item 18a
Printed/Typed Name Signature Month Day Year

GENERATOR | INT'L | TRANSPORTER | DESIGNATED FACILITY

EPA Form 8700-22 (Rev. 3-05) Previous editions are obsolete.

GENERATOR'S INITIAL COPY

EPAPA010000283

Please print or type. (Form designed for use on elite (12-pitch) typewriter.)

Form Approved. OMB No. 2050-0039

UNIFORM HAZARDOUS WASTE MANIFEST

1. Generator ID Number: TXR000079307
2. Page 1 of
3. Emergency Response Phone
4. Manifest Tracking Number: **005593228 JJK**

5. Generator's Name and Mailing Address
CES Environmental Services - Port Arthur
4924 Griggs Road
Houston, TX 77021
State ID: 88555
Generator's Phone:

Generator's Site Address (if different than mailing address)
CES Environmental Services - Port Arthur
2420 Gulfway Drive
Port Arthur, TX 77640

6. Transporter 1 Company Name
CES Environmental Services, Inc
State ID: 30000
U.S. EPA ID Number: TXD008050461

7. Transporter 2 Company Name
U.S. EPA ID Number

8. Designated Facility Name and Site Address
Newpark Environmental Services, LLC
25400 Miller Rd
Winnie TX, 77665
State ID: 39098
Facility's Phone: (409) 724-3119
U.S. EPA ID Number: 315 N/A

9a. HM	9b. U.S. DOT Description (including Proper Shipping Name, Hazard Class, ID Number, and Packing Group (if any))	10. Containers No.	10. Containers Type	11. Total Quantity	12. Unit Wt./Vol.	13. Waste Codes
	1. Non-RCRA/Non DOT regulated wastewater	1	TT	5000	G	D001 D39
	2.					
	3.					
	4.					

14. Special Handling Instructions and Additional Information
Profile ID: CES Environmental (CES - Port Arthur)
Class 1, Nonhazardous Wastewater
PACES Profile ID #: [illegible]
CES Job # - [illegible]
1) [illegible] 2) 186525 6) 304 [illegible] 8) 37695 9) 5/7/09 legal

15. **GENERATOR'S/OFFEROR'S CERTIFICATION:** I hereby declare that the contents of this consignment are fully and accurately described above by the proper shipping name, and are classified, packaged, marked and labeled/placarded, and are in all respects in proper condition for transport according to applicable international and national governmental regulations. If export shipment and I am the Primary Exporter, I certify that the contents of this consignment conform to the terms of the attached EPA Acknowledgment of Consent.
I certify that the waste minimization statement identified in 40 CFR 262.27(a) (if I am a large quantity generator) or (b) (if I am a small quantity generator) is true.

Generator's/Offeror's Printed/Typed Name: [illegible] Signature: [illegible] Month 7 Day 21 Year 09

16. International Shipments ☐ Import to U.S. ☐ Export from U.S. Port of entry/exit:
Transporter signature (for exports only): Date leaving U.S.:

17. Transporter Acknowledgment of Receipt of Materials
Transporter 1 Printed/Typed Name: Kevin Wilson Signature: [illegible] Month 7 Day 21 Year 09
Transporter 2 Printed/Typed Name: Signature: Month Day Year

18. Discrepancy
18a. Discrepancy Indication Space ☐ Quantity ☐ Type ☐ Residue ☐ Partial Rejection ☐ Full Rejection
Manifest Reference Number:

18b. Alternate Facility (or Generator) U.S. EPA ID Number
Facility's Phone:

18c. Signature of Alternate Facility (or Generator) Month Day Year

19. Hazardous Waste Report Management Method Codes (i.e., codes for hazardous waste treatment, disposal, and recycling systems)
1. H134 2. 3. 4.

20. Designated Facility Owner or Operator: Certification of receipt of hazardous materials covered by the manifest except as noted in Item 18a
Printed/Typed Name: Vicki Hofmann Signature: [illegible] Month 7 Day 21 Year 09

GENERATOR | INT'L | TRANSPORTER | DESIGNATED FACILITY

EPA Form 8700-22 (Rev. 3-05) Previous editions are obsolete.

GENERATOR'S INITIAL COPY

EPAPA010000284

Please print or type. (Form designed for use on elite (12-pitch) typewriter.) Form Approved. OMB No. 2050-0039

UNIFORM HAZARDOUS WASTE MANIFEST

1. Generator ID Number: TXR000079307
2. Page 1 of
3. Emergency Response Phone
4. Manifest Tracking Number: 005593228 JJK

5. Generator's Name and Mailing Address
CES Environmental Services - Port Arthur
4904 Griggs Road
Houston, TX 77021
State ID: 88585
Generator's Phone:

Generator's Site Address (if different than mailing address)
CES Environmental Services - Port Arthur
2420 Gulfway Drive
Port Arthur, TX 77640

6. Transporter 1 Company Name
CES Environmental Services, Inc
State ID: 37010
U.S. EPA ID Number: TXD000050461

7. Transporter 2 Company Name
U.S. EPA ID Number

8. Designated Facility Name and Site Address
Newpark Environmental Services, LLC
25400 Wilber Rd
Winnie TX, 77665
State ID: 39008
U.S. EPA ID Number: TXD000825505
Facility's Phone: (409) 724-3142

9a. HM	9b. U.S. DOT Description (including Proper Shipping Name, Hazard Class, ID Number, and Packing Group (if any))	10. Containers No.	10. Containers Type	11. Total Quantity	12. Unit Wt./Vol.	13. Waste Codes
	1. Non-RCRA/Non DOT regulated wastewater	1	TT	5000	G	0001 1131
	2.					
	3.					
	4.					

14. Special Handling Instructions and Additional Information
Folder ID : CES Environmental (CES - Port Arthur)
Class 1, Non-hazardous Wastewater
PACES SAMPLE ID # 18/10
CES Job # - 89138
1) 0926091180BH 2) 1)885585 6) 3040 8) 39093 4) 5716gal

15. **GENERATOR'S/OFFEROR'S CERTIFICATION:** I hereby declare that the contents of this consignment are fully and accurately described above by the proper shipping name, and are classified, packaged, marked and labeled/placarded, and are in all respects in proper condition for transport according to applicable international and national governmental regulations. If export shipment and I am the Primary Exporter, I certify that the contents of this consignment conform to the terms of the attached EPA Acknowledgment of Consent.
I certify that the waste minimization statement identified in 40 CFR 262.27(a) (if I am a large quantity generator) or (b) (if I am a small quantity generator) is true.

Generator's/Offeror's Printed/Typed Name: Dr Rombella
Signature:
Month 7 Day 21 Year 09

16. International Shipments ☐ Import to U.S. ☐ Export from U.S. Port of entry/exit:
Transporter signature (for exports only): Date leaving U.S.:

17. Transporter Acknowledgment of Receipt of Materials
Transporter 1 Printed/Typed Name: Kevin Wilson
Signature:
Month 7 Day 21 Year 09
Transporter 2 Printed/Typed Name:
Signature:
Month Day Year

18. Discrepancy
18a. Discrepancy Indication Space ☐ Quantity ☐ Type ☐ Residue ☐ Partial Rejection ☐ Full Rejection
Manifest Reference Number:

18b. Alternate Facility (or Generator) U.S. EPA ID Number
Facility's Phone:

18c. Signature of Alternate Facility (or Generator) Month Day Year

19. Hazardous Waste Report Management Method Codes (i.e., codes for hazardous waste treatment, disposal, and recycling systems)
1. H134 2. 3. 4.

20. Designated Facility Owner or Operator: Certification of receipt of hazardous materials covered by the manifest except as noted in Item 18a
Printed/Typed Name: Vicki Hoffauer
Signature:
Month 7 Day 21 Year 09

GENERATOR | INT'L | TRANSPORTER | DESIGNATED FACILITY

EPA Form 8700-22 (Rev. 3-05) Previous editions are obsolete. **TRANSPORTER'S COPY**

EPAPA010000285

CES Environmental Services, Inc.

4904 Griggs Road
Houston, TX 77021
Tel. (713) 676-1460
Fax. (713) 676-1676

Transportation Work Ticket

Folder ID : CES Environmental (CES - Port Arthur) Class 1, Non-hazardous Wastewater

Date : 7-21-09 **Manifest # :** 5593228

Client : CES Environmental Services - Port Arthur **Ticket :** 89138

Phone : **Consignee :** Newpark Environmental Services, LLC

Transporter : CES Environmental Services, Inc.

Signature **Signature**

Leave CES Yard :	1230	**Arrive At Destination**	1500
Arrive At Customer :	1250	**Begin Unloading :**	1600
Begin Loading :		**Finish Unloading :**	
Finish Loading :		**Leave Destination :**	
Leave Customer :	1400	**Arrive At CES Yard :**	1730

Customer PO #:

Total Hours:

CES Unload: ☐

Gross Weight :		**Ending Odometer :**	48705
Tare Weight :		**Begining Odometer :**	48631
Net Weight :		**Total Miles :**	74

Driver : Wilson, Kevin **Tractor # :** 2004 **Tote # :**

Signature : **Trailer # :** 221 **Box # :**

Job Comments/Equipment :

White (CES Office) Yellow (CES Office / Billing) Pink (CES Office / IFTA) Golden Rod (Customer)

TK 2004
TR 221

DATE 7-21-09 NO. 622

PORT ARTHUR CHEMICAL ENVIRONMENTAL SERVICES
P.O. BOX 218
2420 SOUTH GULFWAY DRIVE
PORT ARTHUR, TEXAS 77640

PACES JOB # 89138

TICKET ID	622	
07/21/2009	12:10:39 pm	
INBOUND WT	31380	lb
07/21/2009	01:53:53 pm	
OUTBOUND WT	78480	lb
NET WT	47100	

DRIVER ON ☐ OFF ☑

WEIGHED BY

Please print or type. (Form designed for use on elite (12-pitch) typewriter.) Form Approved. OMB No. 2050-0039

UNIFORM HAZARDOUS WASTE MANIFEST

1. Generator ID Number: TXR000079307
2. Page 1 of
3. Emergency Response Phone
4. Manifest Tracking Number: 005593229 JJK

5. Generator's Name and Mailing Address
CES Environmental Services - Port Arthur
4904 Griggs Road
Houston, TX 77021
State ID: 88585
Generator's Phone:

Generator's Site Address (if different than mailing address)
CES Environmental Services - Port Arthur
2420 Gulfway Drive
Port Arthur, TX 77640

6. Transporter 1 Company Name: CES Environmental Services, Inc.
State ID: 30900
U.S. EPA ID Number: TXD000050461

7. Transporter 2 Company Name
U.S. EPA ID Number

8. Designated Facility Name and Site Address
Newpark Environmental Services, LLC
26400 Wilbeg Rd
Winnie, TX 77665
State ID: 39098
U.S. EPA ID Number: LAD 141 N/A
Facility's Phone: (409) 724-3112

9a. HM	9b. U.S. DOT Description (including Proper Shipping Name, Hazard Class, ID Number, and Packing Group (if any))	10. Containers No.	Type	11. Total Quantity	12. Unit Wt./Vol.	13. Waste Codes
	1. Non-RCRA/Non DOT regulated wastewater	1	TT	5000	G	D001
	2.					
	3.					
	4.	334				

14. Special Handling Instructions and Additional Information
Folder ID: CES Environmental (CES - Port Arthur)
Class 1, Non-hazardous Wastewater
PACES SAMPLE ID # 1/01/1 CES Job # - 89166
1) 0726091180BH 2) 1)88585 6)30900 - 8)39858 5227gal

15. **GENERATOR'S/OFFEROR'S CERTIFICATION:** I hereby declare that the contents of this consignment are fully and accurately described above by the proper shipping name, and are classified, packaged, marked and labeled/placarded, and are in all respects in proper condition for transport according to applicable international and national governmental regulations. If export shipment and I am the Primary Exporter, I certify that the contents of this consignment conform to the terms of the attached EPA Acknowledgment of Consent.
I certify that the waste minimization statement identified in 40 CFR 262.27(a) (if I am a large quantity generator) or (b) (if I am a small quantity generator) is true.

Generator's/Offeror's Printed/Typed Name: D Cumberland
Signature
Month 7 Day 22 Year 09

16. International Shipments ☐ Import to U.S. ☐ Export from U.S. Port of entry/exit:
Transporter signature (for exports only): Date leaving U.S.:

17. Transporter Acknowledgment of Receipt of Materials
Transporter 1 Printed/Typed Name: JACK GIBSON
Signature
Month 7 Day 22 Year 09
Transporter 2 Printed/Typed Name
Signature
Month Day Year

18. Discrepancy
18a. Discrepancy Indication Space ☐ Quantity ☐ Type ☐ Residue ☐ Partial Rejection ☐ Full Rejection
Manifest Reference Number:
18b. Alternate Facility (or Generator) U.S. EPA ID Number
Facility's Phone:
18c. Signature of Alternate Facility (or Generator) Month Day Year

19. Hazardous Waste Report Management Method Codes (i.e., codes for hazardous waste treatment, disposal, and recycling systems)
1. H134 2. 3. 4.

20. Designated Facility Owner or Operator: Certification of receipt of hazardous materials covered by the manifest except as noted in Item 18a
Printed/Typed Name: Vicki Hoffmeier
Signature
Month 7 Day 22 Year 09

GENERATOR | INT'L | TRANSPORTER | DESIGNATED FACILITY

EPA Form 8700-22 (Rev. 3-05) Previous editions are obsolete. **TRANSPORTER'S COPY**

EPAPA010000288

Please print or type. (Form designed for use on elite (12-pitch) typewriter.) Form Approved. OMB No. 2050-0039

UNIFORM HAZARDOUS WASTE MANIFEST

1. Generator ID Number: TXR000079367
2. Page 1 of
3. Emergency Response Phone
4. Manifest Tracking Number: 005593229 JJK

5. Generator's Name and Mailing Address
CES Environmental Services - Port Arthur
4604 Griggs Road
Houston, TX 77021
State ID: [illegible]
Generator's Site Address (if different than mailing address)
CES Environmental Services - Port Arthur
2420 Gulfway Drive
Port Arthur, TX 77640
Generator's Phone:

6. Transporter 1 Company Name
CES Environmental Services, Inc.
State ID: [illegible]
U.S. EPA ID Number: TXD000050461

7. Transporter 2 Company Name
U.S. EPA ID Number

8. Designated Facility Name and Site Address
Newport Environmental Services, LLC
2010 Weber Rd.
Winnie, TX 77665
State ID: [illegible]
U.S. EPA ID Number: N/A
Facility's Phone: (409) 722-3145

9a. HM	9b. U.S. DOT Description (including Proper Shipping Name, Hazard Class, ID Number, and Packing Group (if any))	10. Containers No.	10. Containers Type	11. Total Quantity	12. Unit Wt./Vol.	13. Waste Codes
	1. Non-RCRA/Non DOT regulated wastewater	1	TT	5000	G	[illegible]
	2.					
	3.					
	4.					

14. Special Handling Instructions and Additional Information
Profile ID : CES Environmental (CES - Port Arthur)
Class 1, Non-hazardous Wastewater
PACES SAMPLE ID# [illegible] CES Job # - 89160
1) 0[illegible]1180BH 2) 1) 88565 6) [illegible] 8) [illegible] 5227 [illegible]

15. **GENERATOR'S/OFFEROR'S CERTIFICATION:** I hereby declare that the contents of this consignment are fully and accurately described above by the proper shipping name, and are classified, packaged, marked and labeled/placarded, and are in all respects in proper condition for transport according to applicable international and national governmental regulations. If export shipment and I am the Primary Exporter, I certify that the contents of this consignment conform to the terms of the attached EPA Acknowledgment of Consent.
I certify that the waste minimization statement identified in 40 CFR 262.27(a) (if I am a large quantity generator) or (b) (if I am a small quantity generator) is true.

Generator's/Offeror's Printed/Typed Name: D C Mixland
Signature:
Month 7 Day 22 Year 07

16. International Shipments ☐ Import to U.S. ☐ Export from U.S. Port of entry/exit:
Transporter signature (for exports only): Date leaving U.S.:

17. Transporter Acknowledgment of Receipt of Materials
Transporter 1 Printed/Typed Name: JACK GIBSON
Signature: Jack Gibson
Month 7 Day 22 Year 07
Transporter 2 Printed/Typed Name
Signature
Month Day Year

18. Discrepancy
18a. Discrepancy Indication Space ☐ Quantity ☐ Type ☐ Residue ☐ Partial Rejection ☐ Full Rejection
Manifest Reference Number:
18b. Alternate Facility (or Generator) U.S. EPA ID Number
Facility's Phone:
18c. Signature of Alternate Facility (or Generator) Month Day Year

19. Hazardous Waste Report Management Method Codes (i.e., codes for hazardous waste treatment, disposal, and recycling systems)
1. H134 2. 3. 4.

20. Designated Facility Owner or Operator: Certification of receipt of hazardous materials covered by the manifest except as noted in Item 18a
Printed/Typed Name: [illegible]
Signature: [illegible]
Month 7 Day 22 Year 07

GENERATOR — INT'L — TRANSPORTER — DESIGNATED FACILITY

EPA Form 8700-22 (Rev. 3-05) Previous editions are obsolete. **GENERATOR'S INITIAL COPY**

EPAPA010000289

CES Environmental Services, Inc.

4904 Griggs Road
Houston, TX 77021
Tel. (713) 676-1460
Fax. (713) 676-1676

Transportation Work Ticket

Folder ID : CES Environmental (CES - Port Arthur) Class 1, Non-hazardous Wastewater

Date : 7/22/2009 **Manifest # :** 5593229

Client : CES Environmental Services - Port Arthur **Ticket :** 89166

Phone : **Consignee :** Newpark Environmental Services, LLC

Transporter : CES Environmental Services, Inc.

Signature Bo Cumbe **Signature**

Leave CES Yard :	10:00AM	**Arrive At Destination**	
Arrive At Customer :	11:00AM	**Begin Unloading :**	
Begin Loading :	11:20AM	**Finish Unloading :**	
Finish Loading :	11:40 am	**Leave Destination :**	
Leave Customer :	11:45 AM	**Arrive At CES Yard :**	12:30pm

Customer PO #:

Total Hours:

CES Unload: ☐

Gross Weight :		**Ending Odometer :**	
Tare Weight :		**Begining Odometer :**	
Net Weight :		**Total Miles :**	

Driver : Gipson, Jack **Tractor # :** 299 **Tote # :**

Signature : Jack Gipson **Trailer # :** 239 **Box # :**

Job Comments/Equipment : Haul one load of waste water to New PARK and off load

White (CES Office) Yellow (CES Office / Billing) Pink (CES Office / IFTA) Golden Rod (Customer)

METTLER TOLEDO

AUTHORIZED SIGNATURE

Newpark Env. Services LC CN 59761
26400 WILBER RD
WINNE TX 77665

ID	2	GROSS	78200 lb (i)
VEHICLE	2216	TARE	31680 lb
TIME	11:58 AM	NET	46520 lb
DATE	07 22 09		

Please print or type. (Form designed for use on elite (12-pitch) typewriter.)

Form Approved. OMB No. 2050-0039

UNIFORM HAZARDOUS WASTE MANIFEST

1. Generator ID Number: TXR000079307
2. Page 1 of
3. Emergency Response Phone: (713) 676-1460
4. Manifest Tracking Number: 005593234 JJK

5. Generator's Name and Mailing Address: CES Environmental Services - Port Arthur, 4204 Griggs Road, Houston, TX 77021 — State ID: [illegible]
Generator's Site Address (if different than mailing address): CES Environmental Services - Port Arthur, 2420 S. Gulfway Drive, Port Arthur, TX 77640
Generator's Phone: [illegible] — (713) 676-1460

6. Transporter 1 Company Name: CES Environmental Services, Inc. — State ID 30900 — U.S. EPA ID Number: TXD008950461

7. Transporter 2 Company Name — U.S. EPA ID Number:

8. Designated Facility Name and Site Address: CES Environmental Services, Inc., 4204 Griggs Rd., Houston, TX 77021 — State ID 30900 — U.S. EPA ID Number: TXD008950461
Facility's Phone: [illegible]

9a. HM	9b. U.S. DOT Description (including Proper Shipping Name, Hazard Class, ID Number, and Packing Group (if any))	10. Containers No.	10. Containers Type	11. Total Quantity	12. Unit Wt./Vol.	13. Waste Codes
X	1. Non-RCRA/Non DOT regulated wastewater		TT	5200	G	
	2.					
	3.					
	4.					

14. Special Handling Instructions and Additional Information
State ID: CES Internal Work
1) PA-3002 2) 3) 4)
This is to certify that the above-named materials are properly classified, described, packaged, marked and labeled, and are in proper condition for transportation according to the applicable regulations of the Department of Transportation. CES Job # [illegible]

15. **GENERATOR'S/OFFEROR'S CERTIFICATION:** I hereby declare that the contents of this consignment are fully and accurately described above by the proper shipping name, and are classified, packaged, marked and labeled/placarded, and are in all respects in proper condition for transport according to applicable international and national governmental regulations. If export shipment and I am the Primary Exporter, I certify that the contents of this consignment conform to the terms of the attached EPA Acknowledgment of Consent.
I certify that the waste minimization statement identified in 40 CFR 262.27(a) (if I am a large quantity generator) or (b) (if I am a small quantity generator) is true.

Generator's/Offeror's Printed/Typed Name: Bo Cumberland — Signature: [signature] — Month 7 Day 22 Year 09

16. International Shipments ☐ Import to U.S. ☐ Export from U.S. Port of entry/exit:
Transporter signature (for exports only): Date leaving U.S.:

17. Transporter Acknowledgment of Receipt of Materials
Transporter 1 Printed/Typed Name: Juan Manuel — Signature: [signature] — Month 7 Day 22 Year 09
Transporter 2 Printed/Typed Name — Signature — Month Day Year

18. Discrepancy
18a. Discrepancy Indication Space ☐ Quantity ☐ Type ☐ Residue ☐ Partial Rejection ☐ Full Rejection
Manifest Reference Number:

18b. Alternate Facility (or Generator) — U.S. EPA ID Number
Facility's Phone:

18c. Signature of Alternate Facility (or Generator) — Month Day Year

19. Hazardous Waste Report Management Method Codes (i.e., codes for hazardous waste treatment, disposal, and recycling systems)
1. H141 2. 3. 4.

20. Designated Facility Owner or Operator: Certification of receipt of hazardous materials covered by the manifest except as noted in Item 18a
Printed/Typed Name — Signature — Month Day Year

GENERATOR — INT'L — TRANSPORTER — DESIGNATED FACILITY

EPA Form 8700-22 (Rev. 3-05) Previous editions are obsolete.

GENERATOR'S INITIAL COPY

EPAPA010000292

CES Environmental Services, Inc.

4904 Griggs Road
Houston, TX 77021
Tel. (713) 676-1460
Fax. (713) 676-1676

Transportation Work Ticket

Folder ID : CES Internal Work

Date : 7/23/2009 **Manifest # :** 5593234

Client : CES Environmental Services - Port Arthur **Ticket :** 89181

Phone : 7136761460 **Consignee :** CES Environmental Services, Inc.

Transporter : CES Environmental Services, Inc.

Signature _____ **Signature** _____

Leave CES Yard :		**Arrive At Destination**	
Arrive At Customer :	12:00	**Begin Unloading :**	
Begin Loading :		**Finish Unloading :**	
Finish Loading :	1:45	**Leave Destination :**	
Leave Customer :	1:45	**Arrive At CES Yard :**	4:45

Customer PO #:

Total Hours:

CES Unload: ☐

Gross Weight :		**Ending Odometer :**	189593
Tare Weight :		**Begining Odometer :**	189491
Net Weight :		**Total Miles :**	97

Driver : Mendoza, Juan **Tractor # :** 2001 **Tote # :**

Signature : Mendoza **Trailer # :** ~~420~~ 238 **Box # :**

Job Comments/Equipment :

White (CES Office) Yellow (CES Office / Billing) Pink (CES Office / IFTA) Golden Rod (Customer)

TH 2001
TR 238

DATE 7-23-09 NO. 630

PORT ARTHUR CHEMICAL ENVIRONMENTAL SERVICES
P.O. BOX 218
2420 SOUTH GULFWAY DRIVE
PORT ARTHUR, TEXAS 77640

FACES JOB # 89181

TICKET ID	630	
07/23/2009	12:24:26 pm	
INBOUND WT	32720	lb
07/23/2009	01:44:20 pm	
OUTBOUND WT	65920	lb
NET WT	33200	

DRIVER ON ☐ OFF ☐

WEIGHED BY

238

Please print or type. (Form designed for use on elite (12-pitch) typewriter.)

Form Approved. OMB No. 2050-0039

UNIFORM HAZARDOUS WASTE MANIFEST

1. Generator ID Number: TXR000079207
2. Page 1 of
3. Emergency Response Phone: (713) 675-1460
4. Manifest Tracking Number: **005593240 JJK**

5. Generator's Name and Mailing Address
CES Environmental Services - Port Arthur
4924 Griggs Road
Houston, TX 77021
State ID: 30500
Generator's Phone: (713) 675-1460

Generator's Site Address (if different than mailing address)
CES Environmental Services - Port Arthur
2420 S. Gulfway Drive
Port Arthur, TX 77640
(713) 675-1460

6. Transporter 1 Company Name: CES Environmental Services, Inc.
State ID 30500
U.S. EPA ID Number: TXD008950461

7. Transporter 2 Company Name
U.S. EPA ID Number

8. Designated Facility Name and Site Address
CES Environmental Services, Inc.
4924 Griggs Rd.
Houston TX, 77021
State ID 30500
Facility's Phone: (713) 675-1460
U.S. EPA ID Number: TXD008950461

9a. HM	9b. U.S. DOT Description (including Proper Shipping Name, Hazard Class, ID Number, and Packing Group (if any))	10. Containers No.	10. Containers Type	11. Total Quantity	12. Unit Wt./Vol.	13. Waste Codes		
X	1. Non-RCRA/Non DOT regulated wastewater	1	TT	500	G	0001011		
	2.							
	3.							
	4.							

14. Special Handling Instructions and Additional Information
Folder ID : CES Internal Work
1) PA-3009 2) 3) 4)
This is to certify that the above-named materials are properly classified, described, packaged, marked and labeled, and are in proper condition for transportation according to the applicable regulations of the Department of Transportation. CES Job # - 89290
89290

15. **GENERATOR'S/OFFEROR'S CERTIFICATION:** I hereby declare that the contents of this consignment are fully and accurately described above by the proper shipping name, and are classified, packaged, marked and labeled/placarded, and are in all respects in proper condition for transport according to applicable international and national governmental regulations. If export shipment and I am the Primary Exporter, I certify that the contents of this consignment conform to the terms of the attached EPA Acknowledgment of Consent.
I certify that the waste minimization statement identified in 40 CFR 262.27(a) (if I am a large quantity generator) or (b) (if I am a small quantity generator) is true.

Generator's/Offeror's Printed/Typed Name: Dennette Sartin
Signature: Dennette Sartin
Month 7 Day 27 Year 09

GENERATOR

16. International Shipments ☐ Import to U.S. ☐ Export from U.S. Port of entry/exit:
Transporter signature (for exports only): Date leaving U.S.:

INT'L

17. Transporter Acknowledgment of Receipt of Materials
Transporter 1 Printed/Typed Name: Ken Wilson
Signature
Month 7 Day 27 Year 09
Transporter 2 Printed/Typed Name
Signature
Month Day Year

TRANSPORTER

18. Discrepancy
18a. Discrepancy Indication Space ☐ Quantity ☐ Type ☐ Residue ☐ Partial Rejection ☐ Full Rejection
Manifest Reference Number:
18b. Alternate Facility (or Generator)
U.S. EPA ID Number
Facility's Phone:
18c. Signature of Alternate Facility (or Generator)
Month Day Year

19. Hazardous Waste Report Management Method Codes (i.e., codes for hazardous waste treatment, disposal, and recycling systems)
1. H141 2. 3. 4.

20. Designated Facility Owner or Operator: Certification of receipt of hazardous materials covered by the manifest except as noted in Item 18a
Printed/Typed Name: Sam Brown
Signature
Month 7 Day 27 Year 09

DESIGNATED FACILITY

EPA Form 8700-22 (Rev. 3-05) Previous editions are obsolete.

GENERATOR'S INITIAL COPY

EPAPA010000295

238

Please print or type. (Form designed for use on elite (12-pitch) typewriter.)

Form Approved. OMB No. 2050-0039

UNIFORM HAZARDOUS WASTE MANIFEST

1. Generator ID Number: TXR000070307
2. Page 1 of
3. Emergency Response Phone: (713) 676-1460
4. Manifest Tracking Number: **005593240 JJK**

5. Generator's Name and Mailing Address
CES Environmental Services - Port Arthur
4904 Griggs Road
Houston, TX 77021
State ID: 88585
Generator's Phone: (713) 676-1460

Generator's Site Address (if different than mailing address)
CES Environmental Services - Port Arthur
2420 S. Gulfway Drive
Port Arthur, TX 77640
(713) 676-1460

6. Transporter 1 Company Name: CES Environmental Services, Inc.
State ID: 30000
U.S. EPA ID Number: TXD008050461

7. Transporter 2 Company Name
U.S. EPA ID Number

8. Designated Facility Name and Site Address
CES Environmental Services, Inc.
4904 Griggs Rd.
Houston TX, 77021
Facility's Phone: (713) 676-1460
State ID: 30900
U.S. EPA ID Number: TXD008050461

9a. HM	9b. U.S. DOT Description (including Proper Shipping Name, Hazard Class, ID Number, and Packing Group (if any))	10. Containers No.	10. Containers Type	11. Total Quantity	12. Unit Wt./Vol.	13. Waste Codes
X	1. Non-RCRA/Non DOT regulated wastewater	1	TT	500	G	0000 0011
	2.					
	3.					
	4.					

14. Special Handling Instructions and Additional Information
Folder ID : CES Internal Work
1) PA-3005 2) 3) 4)
CES Job # - 89290

This is to certify that the above-named materials are properly classified, described, packaged, marked and labeled, and are in proper condition for transportation according to the applicable regulations of the Department of Transportation.

15. **GENERATOR'S/OFFEROR'S CERTIFICATION:** I hereby declare that the contents of this consignment are fully and accurately described above by the proper shipping name, and are classified, packaged, marked and labeled/placarded, and are in all respects in proper condition for transport according to applicable international and national governmental regulations. If export shipment and I am the Primary Exporter, I certify that the contents of this consignment conform to the terms of the attached EPA Acknowledgment of Consent.
I certify that the waste minimization statement identified in 40 CFR 262.27(a) (if I am a large quantity generator) or (b) (if I am a small quantity generator) is true.

Generator's/Offeror's Printed/Typed Name: Dennette Sartin
Signature: Dennette Sartin
Month 7 Day 27 Year 09

INT'L

16. International Shipments ☐ Import to U.S. ☐ Export from U.S. Port of entry/exit:
Transporter signature (for exports only): Date leaving U.S.:

TRANSPORTER

17. Transporter Acknowledgment of Receipt of Materials
Transporter 1 Printed/Typed Name: Kevin Wilson
Signature:
Month 7 Day 27 Year 09
Transporter 2 Printed/Typed Name
Signature
Month Day Year

DESIGNATED FACILITY

18. Discrepancy
18a. Discrepancy Indication Space ☐ Quantity ☐ Type ☐ Residue ☐ Partial Rejection ☐ Full Rejection
Manifest Reference Number:

18b. Alternate Facility (or Generator)
U.S. EPA ID Number
Facility's Phone:

18c. Signature of Alternate Facility (or Generator)
Month Day Year

19. Hazardous Waste Report Management Method Codes (i.e., codes for hazardous waste treatment, disposal, and recycling systems)
1. H141 2. 3. 4.

20. Designated Facility Owner or Operator: Certification of receipt of hazardous materials covered by the manifest except as noted in Item 18a
Printed/Typed Name: Sam Brown
Signature:
Month 7 Day 27 Year 09

EPA Form 8700-22 (Rev. 3-05) Previous editions are obsolete.

TRANSPORTER'S COPY

EPAPA010000296

Please print or type. (Form designed for use on elite (12-pitch) typewriter.) Form Approved. OMB No. 2050-0039

UNIFORM HAZARDOUS WASTE MANIFEST

1. Generator ID Number: TXR000079307
2. Page 1 of
3. Emergency Response Phone: (713) 676-1460
4. Manifest Tracking Number: 005593240 JJK

5. Generator's Name and Mailing Address
CES Environmental Services - Port Arthur
4904 Griggs Road
Houston, TX 77021
State ID: 88585
Generator's Phone: (713) 676-1460

Generator's Site Address (if different than mailing address)
CES Environmental Services - Port Arthur
2420 S. Gulfway Drive
Port Arthur, TX 77640
(713) 676-1460

6. Transporter 1 Company Name: CES Environmental Services, Inc.
State ID 30900
U.S. EPA ID Number: TXD008950461

7. Transporter 2 Company Name
U.S. EPA ID Number

8. Designated Facility Name and Site Address
CES Environmental Services, Inc.
4904 Griggs Rd.
Houston TX, 77021
State ID 30900
Facility's Phone: (713) 676-1460
U.S. EPA ID Number: TXD008950461

9a. HM	9b. U.S. DOT Description (including Proper Shipping Name, Hazard Class, ID Number, and Packing Group (if any))	10. Containers No.	10. Containers Type	11. Total Quantity	12. Unit Wt./Vol.	13. Waste Codes
X	1. Non-RCRA/Non DOT regulated wastewater	1	TT	000	G	00081011
	2.					
	3.					
	4.					

14. Special Handling Instructions and Additional Information
Folder ID : CES Internal Work
1) PA-3005 2) 3) 4)
This is to certify that the above-named materials are properly classified, described, packaged, marked and labeled, and are in proper condition for transportation according to the applicable regulations of the Department of Transportation
CES Job # - 89290

15. **GENERATOR'S/OFFEROR'S CERTIFICATION:** I hereby declare that the contents of this consignment are fully and accurately described above by the proper shipping name, and are classified, packaged, marked and labeled/placarded, and are in all respects in proper condition for transport according to applicable international and national governmental regulations. If export shipment and I am the Primary Exporter, I certify that the contents of this consignment conform to the terms of the attached EPA Acknowledgment of Consent.
I certify that the waste minimization statement identified in 40 CFR 262.27(a) (if I am a large quantity generator) or (b) (if I am a small quantity generator) is true.

Generator's/Offeror's Printed/Typed Name: Dennette Sartin
Signature: Dennette Sartin
Month 7 Day 27 Year 09

INT'L
16. International Shipments ☐ Import to U.S. ☐ Export from U.S. Port of entry/exit:
Transporter signature (for exports only): Date leaving U.S.:

TRANSPORTER
17. Transporter Acknowledgment of Receipt of Materials
Transporter 1 Printed/Typed Name: Kevin Wilson
Signature: Kevin Wilson
Month 7 Day 27 Year 09
Transporter 2 Printed/Typed Name
Signature
Month Day Year

DESIGNATED FACILITY
18. Discrepancy
18a. Discrepancy Indication Space ☐ Quantity ☐ Type ☐ Residue ☐ Partial Rejection ☐ Full Rejection
Manifest Reference Number:
18b. Alternate Facility (or Generator)
U.S. EPA ID Number
Facility's Phone:
18c. Signature of Alternate Facility (or Generator)
Month Day Year
19. Hazardous Waste Report Management Method Codes (i.e., codes for hazardous waste treatment, disposal, and recycling systems)
1. H141 2. 3. 4.
20. Designated Facility Owner or Operator: Certification of receipt of hazardous materials covered by the manifest except as noted in Item 18a
Printed/Typed Name
Signature
Month Day Year

EPA Form 8700-22 (Rev. 3-05) Previous editions are obsolete.

DESIGNATED FACILITY TO DESTINATION STATE (IF REQUIRED)

CES Environmental Services, Inc.

4904 Griggs Road
Houston, TX 77021
Tel. (713) 676-1460
Fax. (713) 676-1676

Transportation Work Ticket

Folder ID : CES Internal Work

Date : 7/27/2009 **Manifest # :**

Client : CES Environmental Services - Port Arthur **Ticket :** 89290

Phone : 7136761460 **Consignee :** CES Environmental Services, Inc.

Transporter : CES Environmental Services, Inc.

Signature **Signature**

Leave CES Yard :	0700	**Arrive At Destination**	1315
Arrive At Customer :	0730	**Begin Unloading :**	
Begin Loading :		**Finish Unloading :**	
Finish Loading :	1050	**Leave Destination :**	1340
Leave Customer :	1100	**Arrive At CES Yard :**	1530

Customer PO #:

Total Hours:

CES Unload: ☐

Gross Weight :		**Ending Odometer :**	49255
Tare Weight :		**Begining Odometer :**	49066
Net Weight :		**Total Miles :**	189

Driver : Wilson, Kevin **Tractor # :** 2004 **Tote # :**

Signature : **Trailer # :** 238 **Box # :**

Job Comments/Equipment :

TRAILER WAS DROPPED ON CES HOUSTON YARD.

White (CES Office) Yellow (CES Office / Billing) Pink (CES Office / IFTA) Golden Rod (Customer)

TK 2004
TR 238

DATE 7-27-09 NO. 637

PORT ARTHUR CHEMICAL ENVIRONMENTAL SERVICES
P.O. BOX 218
2420 SOUTH GULFWAY DRIVE
PORT ARTHUR, TEXAS 77640

PACES JOB # 89290

TICKET ID	637	
07/27/2009	07:28:06 am	
INBOUND WT	31820	lb
07/27/2009	10:58:44 am	
OUTBOUND WT	79400	lb
NET WT	47580	

DRIVER ON ☐ OFF ☑

WEIGHED BY

T # 225

Please print or type. (Form designed for use on elite (12-pitch) typewriter.)

Form Approved. OMB No. 2050-0039

UNIFORM HAZARDOUS WASTE MANIFEST

1. Generator ID Number: TXR000079307
2. Page 1 of 1
3. Emergency Response Phone: (713) 676-1460
4. Manifest Tracking Number: 005593243 JJK

5. Generator's Name and Mailing Address
CES Environmental Services - Port Arthur
4904 Griggs Road
Houston, TX 77021
State ID: 30300
Generator's Phone: (713) 676-1460

Generator's Site Address (if different than mailing address)
CES Environmental Services - Port Arthur
2420 S. Gulfway Drive
Port Arthur, TX 77640
(713) 676-1460

6. Transporter 1 Company Name: CES Environmental Services, Inc.
State ID: 30300
U.S. EPA ID Number: TXD008950461

7. Transporter 2 Company Name
U.S. EPA ID Number

8. Designated Facility Name and Site Address
CES Environmental Services, Inc.
4904 Griggs Rd.
Houston TX 77021
State ID: 30300
U.S. EPA ID Number: TXD008950461
Facility's Phone: (713) 676-1460

9a. HM	9b. U.S. DOT Description (including Proper Shipping Name, Hazard Class, ID Number, and Packing Group (if any))	10. Containers No.	10. Containers Type	11. Total Quantity	12. Unit Wt./Vol.	13. Waste Codes		
X	1. Non-DOT/Non IATA regulated wastewater	1	TT		G	D001	D011	
	2.							
	3.							
	4.							

14. Special Handling Instructions and Additional Information
Profile # - 1023 Port Arthur
This is to certify that the above-named materials are properly classified, described, packaged, marked and labeled, and are in proper condition for transportation according to the applicable regulations of the Department of Transportation. CES Job # - 59357
1) PA-3000 2) 3) 4)

15. **GENERATOR'S/OFFEROR'S CERTIFICATION:** I hereby declare that the contents of this consignment are fully and accurately described above by the proper shipping name, and are classified, packaged, marked and labeled/placarded, and are in all respects in proper condition for transport according to applicable international and national governmental regulations. If export shipment and I am the Primary Exporter, I certify that the contents of this consignment conform to the terms of the attached EPA Acknowledgment of Consent.
I certify that the waste minimization statement identified in 40 CFR 262.27(a) (if I am a large quantity generator) or (b) (if I am a small quantity generator) is true.

Generator's/Offeror's Printed/Typed Name: Dennette Sartin
Signature: Dennette Sartin
Month 7 Day 29 Year 09

INT'L
16. International Shipments ☐ Import to U.S. ☐ Export from U.S. Port of entry/exit:
Transporter signature (for exports only): Date leaving U.S.:

TRANSPORTER
17. Transporter Acknowledgment of Receipt of Materials
Transporter 1 Printed/Typed Name: JUAN MENDOZA
Signature:
Month 7 Day 29 Year 09
Transporter 2 Printed/Typed Name
Signature
Month Day Year

DESIGNATED FACILITY
18. Discrepancy
18a. Discrepancy Indication Space ☐ Quantity ☐ Type ☐ Residue ☐ Partial Rejection ☐ Full Rejection
Manifest Reference Number:
18b. Alternate Facility (or Generator)
U.S. EPA ID Number
Facility's Phone:
18c. Signature of Alternate Facility (or Generator)
Month Day Year
19. Hazardous Waste Report Management Method Codes (i.e., codes for hazardous waste treatment, disposal, and recycling systems)
1. H141 2. 3. 4.
20. Designated Facility Owner or Operator: Certification of receipt of hazardous materials covered by the manifest except as noted in Item 18a
Printed/Typed Name
Signature
Month Day Year

EPA Form 8700-22 (Rev. 3-05) Previous editions are obsolete.

GENERATOR'S INITIAL COPY

EPAPA010000300

T. # 225

Please print or type. (Form designed for use on elite (12-pitch) typewriter.) Form Approved. OMB No. 2050-0039

UNIFORM HAZARDOUS WASTE MANIFEST

1. Generator ID Number: TXR000079307
2. Page 1 of 1
3. Emergency Response Phone: (713) 676-1460
4. Manifest Tracking Number: 005593243 JJK

5. Generator's Name and Mailing Address
CES Environmental Services - Port Arthur
4904 Griggs Road
Houston, TX 77021
State ID: 85585

Generator's Site Address (if different than mailing address)
CES Environmental Services - Port Arthur
2420 S. Gulfway Drive
Port Arthur, TX 77640

Generator's Phone: (713) 676-1460 (713) 676-1460

6. Transporter 1 Company Name: CES Environmental Services, Inc. State ID 30900
U.S. EPA ID Number: TXD008950461

7. Transporter 2 Company Name
U.S. EPA ID Number

8. Designated Facility Name and Site Address
CES Environmental Services, Inc.
4904 Griggs Rd
Houston TX, 77021
State ID 30900
U.S. EPA ID Number: TXD008950461
Facility's Phone: (713) 676-1460

9a. HM	9b. U.S. DOT Description (including Proper Shipping Name, Hazard Class, ID Number, and Packing Group (if any))	10. Containers No.	10. Containers Type	11. Total Quantity	12. Unit Wt./Vol.	13. Waste Codes	
X	1. Non-RCRA/Non DOT regulated wastewater	1	TT	43,160	P	D001	
	2.						
	3.						
	4.						

14. Special Handling Instructions and Additional Information
Folder ID: CES Internal Work
1) PA-3005 2) 3) 4)

This is to certify that the above-named materials are properly classified, described, packaged, marked and labeled, and are in proper condition for transportation according to the applicable regulations of the Department of Transportation. CES Job # - 68357

15. **GENERATOR'S/OFFEROR'S CERTIFICATION:** I hereby declare that the contents of this consignment are fully and accurately described above by the proper shipping name, and are classified, packaged, marked and labeled/placarded, and are in all respects in proper condition for transport according to applicable international and national governmental regulations. If export shipment and I am the Primary Exporter, I certify that the contents of this consignment conform to the terms of the attached EPA Acknowledgment of Consent.
I certify that the waste minimization statement identified in 40 CFR 262.27(a) (if I am a large quantity generator) or (b) (if I am a small quantity generator) is true.

Generator's/Offeror's Printed/Typed Name: Jennette Sartin
Signature: Jennette Sartin
Month 7 Day 29 Year 09

16. International Shipments ☐ Import to U.S. ☐ Export from U.S. Port of entry/exit:
Transporter signature (for exports only): Date leaving U.S.:

17. Transporter Acknowledgment of Receipt of Materials
Transporter 1 Printed/Typed Name: JUAN MENDOZA
Signature:
Month 7 Day 29 Year 09
Transporter 2 Printed/Typed Name
Signature:
Month Day Year

18. Discrepancy
18a. Discrepancy Indication Space ☐ Quantity ☐ Type ☐ Residue ☐ Partial Rejection ☐ Full Rejection
Manifest Reference Number:
18b. Alternate Facility (or Generator)
U.S. EPA ID Number
Facility's Phone:
18c. Signature of Alternate Facility (or Generator)
Month Day Year

19. Hazardous Waste Report Management Method Codes (i.e., codes for hazardous waste treatment, disposal, and recycling systems)
1. H141 2. 3. 4.

20. Designated Facility Owner or Operator: Certification of receipt of hazardous materials covered by the manifest except as noted in Item 18a
Printed/Typed Name: JAKE BROWN
Signature:
Month 7 Day 29 Year 09

GENERATOR / INT'L / TRANSPORTER / DESIGNATED FACILITY

EPA Form 8700-22 (Rev. 3-05) Previous editions are obsolete. **TRANSPORTER'S COPY**

EPAPA010000301

CES Environmental Services, Inc.

4904 Griggs Road
Houston, TX 77021
Tel. (713) 676-1460
Fax. (713) 676-1676

Transportation Work Ticket

Folder ID : CES Internal Work

Date : 7/29/2009 **Manifest # :**

Client : CES Environmental Services - Port Arthur **Ticket :** 89357

Phone : 7136761460 **Consignee :** CES Environmental Services, Inc.

Transporter : CES Environmental Services, Inc.

Signature Dinnette Sartin **Signature**

Leave CES Yard :		**Arrive At Destination**	12:30 Pm
Arrive At Customer :	07:00	**Begin Unloading :**	
Begin Loading :		**Finish Unloading :**	
Finish Loading :		**Leave Destination :**	3:15 Pm
Leave Customer :	10:45	**Arrive At CES Yard :**	5:15 Pm

Customer PO #:

Total Hours:

CES Unload: ☐

Gross Weight :		**Ending Odometer :**	190394
Tare Weight :		**Begining Odometer :**	190201
Net Weight :		**Total Miles :**	193

Driver : Mendoza, Juan **Tractor # :** 2001 **Tote # :**

Signature : **Trailer # :** 225 **Box # :**

Job Comments/Equipment :

White (CES Office) Yellow (CES Office / Billing) Pink (CES Office / IFTA) Golden Rod (Customer)

Tk 2001
TR 225

DATE 7-29-09 NO. 641

PORT ARTHUR CHEMICAL ENVIRONMENTAL SERVICES
P.O. BOX 218
2420 SOUTH GULFWAY DRIVE
PORT ARTHUR, TEXAS 77640

PACES JOB # 89357

TICKET ID	641	
07/29/2009	06:18:27 am	
INBOUND WT	29900	lb
07/29/2009	10:34:55 am	
OUTBOUND WT	73060	lb
NET WT	43160	

DRIVER ON ☐ OFF ☒

WEIGHED BY

EPAPA010000303

#254 254

Please print or type. (Form designed for use on elite (12-pitch) typewriter.)

Form Approved. OMB No. 2050-0039

UNIFORM HAZARDOUS WASTE MANIFEST

1. Generator ID Number: TXR000079307
2. Page 1 of 1
3. Emergency Response Phone: (713) 676-1460
4. Manifest Tracking Number: 005593244 JJK

5. Generator's Name and Mailing Address: CES Environmental Services - Port Arthur, 4904 Griggs Road, Houston, TX 77021 — State ID: 89555
Generator's Site Address (if different than mailing address): CES Environmental Services - Port Arthur, 2420 S. Gulfway Drive, Port Arthur, TX 77640
Generator's Phone: (713) 676-1460 | (713) 676-1460

6. Transporter 1 Company Name: CES Environmental Services, Inc. — State ID: 30000 — U.S. EPA ID Number: TXD000950461

7. Transporter 2 Company Name — U.S. EPA ID Number:

8. Designated Facility Name and Site Address: CES Environmental Services, Inc., 4904 Griggs Rd., Houston TX 77021 — State ID: 30700 — U.S. EPA ID Number: TXD000950461
Facility's Phone: (713) 676-1460

9a. HM	9b. U.S. DOT Description (including Proper Shipping Name, Hazard Class, ID Number, and Packing Group (if any))	10. Containers No.	10. Containers Type	11. Total Quantity	12. Unit Wt./Vol.	13. Waste Codes
X	1. Non-DOT/Non DOT regulated wastewater	1	TT	~~700~~ 46240	G	D001 H141
	2.					
	3.					
	4.					

14. Special Handling Instructions and Additional Information: This is to certify that the above-named materials are properly classified, described, packaged, marked and labeled, and are in proper condition for transportation according to the applicable regulations of the Department of Transportation. CES Job # - 89355
1) 74-3005 2) 3) 4)

15. **GENERATOR'S/OFFEROR'S CERTIFICATION:** I hereby declare that the contents of this consignment are fully and accurately described above by the proper shipping name, and are classified, packaged, marked and labeled/placarded, and are in all respects in proper condition for transport according to applicable international and national governmental regulations. If export shipment and I am the Primary Exporter, I certify that the contents of this consignment conform to the terms of the attached EPA Acknowledgment of Consent.
I certify that the waste minimization statement identified in 40 CFR 262.27(a) (if I am a large quantity generator) or (b) (if I am a small quantity generator) is true.

Generator's/Offeror's Printed/Typed Name: Dinnette Santin — Signature: Dinnette Santin — Month 7 Day 28 Year 09

16. International Shipments ☐ Import to U.S. ☐ Export from U.S. Port of entry/exit:
Transporter signature (for exports only): Date leaving U.S.:

17. Transporter Acknowledgment of Receipt of Materials
Transporter 1 Printed/Typed Name: Juan Fuias — Signature: — Month 7 Day 28 Year 09
Transporter 2 Printed/Typed Name: Juan Fuias — Signature: — Month 7 Day 30 Year 09

18. Discrepancy
18a. Discrepancy Indication Space ☐ Quantity ☐ Type ☐ Residue ☐ Partial Rejection ☐ Full Rejection
Manifest Reference Number:
18b. Alternate Facility (or Generator) — U.S. EPA ID Number
Facility's Phone:
18c. Signature of Alternate Facility (or Generator) — Month Day Year

19. Hazardous Waste Report Management Method Codes (i.e., codes for hazardous waste treatment, disposal, and recycling systems)
1. H141 2. 3. 4.

20. Designated Facility Owner or Operator: Certification of receipt of hazardous materials covered by the manifest except as noted in Item 18a
Printed/Typed Name: Sam Dadon — Signature: — Month 7 Day 30 Year 09

GENERATOR — INT'L — TRANSPORTER — DESIGNATED FACILITY

EPA Form 8700-22 (Rev. 3-05) Previous editions are obsolete.

GENERATOR'S INITIAL COPY

EPAPA010000304

CES Environmental Services, Inc.

4904 Griggs Road
Houston, TX 77021
Tel. (713) 676-1460
Fax. (713) 676-1676

Transportation Work Ticket

Folder ID : CES Internal Work

Date : 7/29/2009 **Manifest # :**

Client : CES Environmental Services - Port Arthur **Ticket :** 89355

Phone : 7136761460 **Consignee :** CES Environmental Services, Inc.

Transporter : CES Environmental Services, Inc.

Signature Denuth Santn **Signature**

Leave CES Yard :		**Arrive At Destination**	10:00 pm
Arrive At Customer :	5:00 pm	**Begin Unloading :**	
Begin Loading :	6:00 pm	**Finish Unloading :**	
Finish Loading :	6:50 pm	**Leave Destination :**	
Leave Customer :	8:00 pm	**Arrive At CES Yard :**	

Customer PO #:

Total Hours:

CES Unload: ☐

Gross Weight :		**Ending Odometer :**	
Tare Weight :		**Begining Odometer :**	125694
Net Weight :		**Total Miles :**	

Driver : ~~Wilson, Kevin~~ JUAN FRIAS **Tractor # :** 2003 **Tote # :** 1

Signature : JUAN FRIAS **Trailer # :** 254 **Box # :** 7 3007

Job Comments/Equipment :

White (CES Office) Yellow (CES Office / Billing) Pink (CES Office / IFTA) Golden Rod (Customer)

2003
254

DATE 7-28-09 NO. 640

PORT ARTHUR CHEMICAL ENVIRONMENTAL SERVICES
P.O. BOX 218
2420 SOUTH GULFWAY DRIVE
PORT ARTHUR, TEXAS 77640

PACES JOB # 89355

TICKET ID SCALE TICKET 339 640

07/28/2009 05:07:34 pm

INBOUND WT 32300 lb

SCALE TICKET
339

46240
Net

DRIVER ON ☐ OFF ☑

07/28/2009 08:08:34 pm

WEIGHED BY _____

GROSS 78540 lb

225

Please print or type. (Form designed for use on elite (12-pitch) typewriter.) Form Approved. OMB No. 2050-0039

UNIFORM HAZARDOUS WASTE MANIFEST

1. Generator ID Number: TXR000079307
2. Page 1 of
3. Emergency Response Phone: (713) 676-1460
4. Manifest Tracking Number: 005593253 JJK

5. Generator's Name and Mailing Address: CES Environmental Services - Port Arthur, 4904 Griggs Road, Houston, TX 77021 — State ID: 68585
Generator's Site Address (if different than mailing address): CES Environmental Services - Port Arthur, 2420 S. Gulfway Drive, Port Arthur, TX 77640
Generator's Phone: (713) 676-1460

6. Transporter 1 Company Name: CES Environmental Services, Inc. — State ID: 30900 — U.S. EPA ID Number: TXD008950461
7. Transporter 2 Company Name — U.S. EPA ID Number:
8. Designated Facility Name and Site Address: CES Environmental Services, Inc., 4904 Griggs Rd., Houston TX 77021 — State ID: 30900 — U.S. EPA ID Number: TXD008950461
Facility's Phone: (713) 676-1460

9a. HM	9b. U.S. DOT Description (including Proper Shipping Name, Hazard Class, ID Number, and Packing Group (if any))	10. Containers No.	10. Containers Type	11. Total Quantity	12. Unit Wt./Vol.	13. Waste Codes
X	1. Non-RCRA/Non DOT regulated wastewater			5000	G	
	2.					
	3.					
	4.					

14. Special Handling Instructions and Additional Information
Folder ID : CES Internal Work
1) PA-3005 2) 3) 4)
This is to certify that the above-named materials are properly classified, described, packaged, marked and labeled, and are in proper condition for transportation according to the applicable regulations of the Department of Transportation. CES Job # - 99477

15. **GENERATOR'S/OFFEROR'S CERTIFICATION:** I hereby declare that the contents of this consignment are fully and accurately described above by the proper shipping name, and are classified, packaged, marked and labeled/placarded, and are in all respects in proper condition for transport according to applicable international and national governmental regulations. If export shipment and I am the Primary Exporter, I certify that the contents of this consignment conform to the terms of the attached EPA Acknowledgment of Consent.
I certify that the waste minimization statement identified in 40 CFR 262.27(a) (if I am a large quantity generator) or (b) (if I am a small quantity generator) is true.

Generator's/Offeror's Printed/Typed Name: Jay Mathock — Signature: Jay Mathock — Month 7 Day 31 Year 09

16. International Shipments ☐ Import to U.S. ☐ Export from U.S. Port of entry/exit:
Transporter signature (for exports only): Date leaving U.S.:

17. Transporter Acknowledgment of Receipt of Materials
Transporter 1 Printed/Typed Name: Kevin Wilson — Signature: Kevin Wilson — Month 7 Day 31 Year 09
Transporter 2 Printed/Typed Name — Signature — Month Day Year

18. Discrepancy
18a. Discrepancy Indication Space ☐ Quantity ☐ Type ☐ Residue ☐ Partial Rejection ☐ Full Rejection
Manifest Reference Number:
18b. Alternate Facility (or Generator) — U.S. EPA ID Number
Facility's Phone:
18c. Signature of Alternate Facility (or Generator) — Month Day Year

19. Hazardous Waste Report Management Method Codes (i.e., codes for hazardous waste treatment, disposal, and recycling systems)
1. H141 2. 3. 4.

20. Designated Facility Owner or Operator: Certification of receipt of hazardous materials covered by the manifest except as noted in Item 18a
Printed/Typed Name: MILES ROO — Signature: Miles Roo — Month 7 Day 31 Year 09

GENERATOR — INT'L — TRANSPORTER — DESIGNATED FACILITY

EPA Form 8700-22 (Rev. 3-05) Previous editions are obsolete. **TRANSPORTER'S COPY**

EPAPA010000307

CES Environmental Services, Inc.

4904 Griggs Road
Houston, TX 77021
Tel. (713) 676-1460
Fax. (713) 676-1676

Transportation Work Ticket

Folder ID : CES Internal Work

Date : 7/31/2009 **Manifest # :**

Client : CES Environmental Services - Port Arthur **Ticket :** 89477

Phone : 7136761460 **Consignee :** CES Environmental Services, Inc.

Transporter : CES Environmental Services, Inc.

Signature **Signature**

Leave CES Yard :	1300	**Arrive At Destination**	1600
Arrive At Customer :	1305	**Begin Unloading :**	
Begin Loading :		**Finish Unloading :**	
Finish Loading :		**Leave Destination :**	1630
Leave Customer :	1315	**Arrive At CES Yard :**	1900

Customer PO #:

Total Hours: 7

CES Unload: ☐

Gross Weight :		**Ending Odometer :**	50100
Tare Weight :		**Begining Odometer :**	49917
Net Weight :		**Total Miles :**	

Driver : Wilson, Kevin **Tractor # :** 2004 **Tote # :**

Signature : **Trailer # :** 420 **Box # :**

Job Comments/Equipment :

White (CES Office) Yellow (CES Office / Billing) Pink (CES Office / IFTA) Golden Rod (Customer)

TH 2004
TR225

DATE 7-31-09 NO. 647

PORT ARTHUR CHEMICAL ENVIRONMENTAL SERVICES
P.O. BOX 218
2420 SOUTH GULFWAY DRIVE
PORT ARTHUR, TEXAS 77640

PACES JOB # 89498

TICKET ID	647	
07/31/2009	12:55:16 pm	
INBOUND WT	76560	lb

DRIVER ON ☐ OFF ☑

WEIGHED BY

1530

420

Please print or type. (Form designed for use on elite (12-pitch) typewriter.)

Form Approved. OMB No. 2050-0039

UNIFORM HAZARDOUS WASTE MANIFEST

1. Generator ID Number: TXR000079307
2. Page 1 of 1
3. Emergency Response Phone: (713) 676-1460
4. Manifest Tracking Number: 005593249 JJK

5. Generator's Name and Mailing Address
CES Environmental Services - Port Arthur
4904 Griggs Road
Houston, TX 77021
State ID: 68585
Generator's Phone: (713) 676-1460

Generator's Site Address (if different than mailing address)
CES Environmental Services - Port Arthur
2420 S. Gulfway Drive
Port Arthur, TX 77640
(713) 676-1460

6. Transporter 1 Company Name: CES Environmental Services, Inc.
State ID 30900
U.S. EPA ID Number: TXD008250461

7. Transporter 2 Company Name
U.S. EPA ID Number

8. Designated Facility Name and Site Address
CES Environmental Services, Inc.
4904 Griggs Rd.
Houston TX, 77021
State ID 30900
Facility's Phone: (713) 676-1460
U.S. EPA ID Number: TXD008250461

9a. HM	9b. U.S. DOT Description (including Proper Shipping Name, Hazard Class, ID Number, and Packing Group (if any))	10. Containers No.	10. Containers Type	11. Total Quantity	12. Unit Wt./Vol.	13. Waste Codes
X	1. Non-RCRA/Non DOT regulated wastewater	1	TT	5500	G	001
	2.					
	3.					
	4.					

14. Special Handling Instructions and Additional Information
Folder ID : CES Internal Work
1) PA-3005 2) 3) 4)

This is to certify that the above-named materials are properly classified, described, packaged, marked and labeled, and are in proper condition for transportation according to the applicable regulations of the Department of Transportation. CES Job # - 89476

15. **GENERATOR'S/OFFEROR'S CERTIFICATION:** I hereby declare that the contents of this consignment are fully and accurately described above by the proper shipping name, and are classified, packaged, marked and labeled/placarded, and are in all respects in proper condition for transport according to applicable international and national governmental regulations. If export shipment and I am the Primary Exporter, I certify that the contents of this consignment conform to the terms of the attached EPA Acknowledgment of Consent.
I certify that the waste minimization statement identified in 40 CFR 262.27(a) (if I am a large quantity generator) or (b) (if I am a small quantity generator) is true.

Generator's/Offeror's Printed/Typed Name: Jay Matlock
Signature: Jay Matlock
Month 7 Day 31 Year 09

16. International Shipments ☐ Import to U.S. ☐ Export from U.S. Port of entry/exit:
Transporter signature (for exports only): Date leaving U.S.:

17. Transporter Acknowledgment of Receipt of Materials
Transporter 1 Printed/Typed Name: Leroy Brown
Signature: Leroy Brown
Month 7 Day 31 Year 09

Transporter 2 Printed/Typed Name
Signature
Month Day Year

18. Discrepancy
18a. Discrepancy Indication Space ☐ Quantity ☐ Type ☐ Residue ☐ Partial Rejection ☐ Full Rejection
Manifest Reference Number:

18b. Alternate Facility (or Generator)
U.S. EPA ID Number
Facility's Phone:

18c. Signature of Alternate Facility (or Generator)
Month Day Year

19. Hazardous Waste Report Management Method Codes (i.e., codes for hazardous waste treatment, disposal, and recycling systems)
1. H141 2. 3. 4.

20. Designated Facility Owner or Operator: Certification of receipt of hazardous materials covered by the manifest except as noted in Item 18a
Printed/Typed Name: SAM BROWN
Signature
Month 7 Day 31 Year 09

GENERATOR / TRANSPORTER / INT'L / DESIGNATED FACILITY

EPA Form 8700-22 (Rev. 3-05) Previous editions are obsolete.

TRANSPORTER'S COPY

EPAPA010000310

CES Environmental Services, Inc.

4904 Griggs Road
Houston, TX 77021
Tel. (713) 676-1469
Fax. (713) 676-1676

Transportation Work Ticket

Folder ID : CES Internal Work

Date : 7/31/2009 **Manifest # :** 005593249

Client : CES Environmental Services - Port Arthur **Ticket :** 89476

Phone : 7136761460 **Consignee :** CES Environmental Services, Inc.

Transporter : CES Environmental Services, Inc.

Signature Bob **Signature**

Leave CES Yard :		**Arrive At Destination**	16:30
Arrive At Customer :	13:00	**Begin Unloading :**	
Begin Loading :		**Finish Unloading :**	
Finish Loading :		**Leave Destination :**	18:30
Leave Customer :	15:00	**Arrive At CES Yard :**	

Customer PO #:

Total Hours:

CES Unload: ☐

Gross Weight :	68,720	**Ending Odometer :**	445934
Tare Weight :	33,120	**Begining Odometer :**	445742
Net Weight :	35,600	**Total Miles :**	192

Driver : Brown, Leroy **Tractor # :** ~~294~~ 285 **Tote # :**

Signature : **Trailer # :** ~~225~~ 420 **Box # :**

Job Comments/Equipment : Waiting to load.

Waiting to unload.

White (CES Office) Yellow (CES Office / Billing) Pink (CES Office / IFTA) Golden Rod (Customer)

TL 985
TR 420

DATE 7. 31. 09 NO. 646

PORT ARTHUR CHEMICAL ENVIRONMENTAL SERVICES
P.O. BOX 218
2420 SOUTH GULFWAY DRIVE
PORT ARTHUR, TEXAS 77640

PACES JOB # 89476

TICKET ID	646	
07/31/2009	12:42:28 pm	
INBOUND WT 07/31/2009	33120 02:46:47 pm	lb
OUTBOUND WT	68720	lb
NET WT	35600	

DRIVER ON ☐ OFF ☑

WEIGHED BY L James

Please print or type. (Form designed for use on elite (12-pitch) typewriter.)

Form Approved. OMB No. 2050-0039

UNIFORM HAZARDOUS WASTE MANIFEST

1. Generator ID Number: TXR000079307
2. Page 1 of 1
3. Emergency Response Phone: (713) 676-1460
4. Manifest Tracking Number: 005593247 JJK

5. Generator's Name and Mailing Address
CES Environmental Services - Port Arthur
4004 Griggs Road
Houston, TX 77021
Generator's Phone: 713-676-1460
State ID: - 88535

Generator's Site Address (if different than mailing address)
CES Environmental Services - Port Arthur
2420 S. Gulfway Drive
Port Arthur, TX 77640
713-676-1460

6. Transporter 1 Company Name: CES Environmental Services, Inc.
State ID: 30900
U.S. EPA ID Number: TXD008950461

7. Transporter 2 Company Name
U.S. EPA ID Number

8. Designated Facility Name and Site Address
CES Environmental Services, Inc.
4004 Griggs Rd.
Houston TX, 77021
Facility's Phone: 713-676-1460
State ID 30900
U.S. EPA ID Number: TXD008950461

9a. HM	9b. U.S. DOT Description (including Proper Shipping Name, Hazard Class, ID Number, and Packing Group (if any))	10. Containers No.	10. Containers Type	11. Total Quantity	12. Unit Wt./Vol.	13. Waste Codes
X	1. Non-RCRA/Non DOT regulated wastewater	1	T	5000	G	D001
	2.					
	3.					
	4.					

14. Special Handling Instructions and Additional Information
Folder ID: CES Imported Work
1) PA-3005 2) 3) 4)

This is to certify that the above-named materials are properly classified, described, packaged, marked and labeled, and are in proper condition for transportation according to the applicable regulations of the Department of Transportation. CES Job # - 89430

15. **GENERATOR'S/OFFEROR'S CERTIFICATION:** I hereby declare that the contents of this consignment are fully and accurately described above by the proper shipping name, and are classified, packaged, marked and labeled/placarded, and are in all respects in proper condition for transport according to applicable international and national governmental regulations. If export shipment and I am the Primary Exporter, I certify that the contents of this consignment conform to the terms of the attached EPA Acknowledgment of Consent.
I certify that the waste minimization statement identified in 40 CFR 262.27(a) (if I am a large quantity generator) or (b) (if I am a small quantity generator) is true.

Generator's/Offeror's Printed/Typed Name: Do Cumberland
Signature:
Month 7 Day 30 Year 09

16. International Shipments ☐ Import to U.S. ☐ Export from U.S. Port of entry/exit:
Transporter signature (for exports only): Date leaving U.S.:

17. Transporter Acknowledgment of Receipt of Materials
Transporter 1 Printed/Typed Name: Kevin Wilcox
Signature:
Month 7 Day 30 Year 09
Transporter 2 Printed/Typed Name
Signature
Month Day Year

18. Discrepancy
18a. Discrepancy Indication Space ☐ Quantity ☐ Type ☐ Residue ☐ Partial Rejection ☐ Full Rejection
Manifest Reference Number:

18b. Alternate Facility (or Generator)
U.S. EPA ID Number
Facility's Phone:

18c. Signature of Alternate Facility (or Generator)
Month Day Year

19. Hazardous Waste Report Management Method Codes (i.e., codes for hazardous waste treatment, disposal, and recycling systems)
1. H141 2. 3. 4.

20. Designated Facility Owner or Operator: Certification of receipt of hazardous materials covered by the manifest except as noted in Item 18a
Printed/Typed Name: Sam Brown
Signature:
Month 7 Day 30 Year 09

GENERATOR — INTL — TRANSPORTER — DESIGNATED FACILITY

EPA Form 8700-22 (Rev. 3-05) Previous editions are obsolete.

TRANSPORTER'S COPY

EPAPA010000313

CES Environmental Services, Inc.

4904 Griggs Road
Houston, TX 77021
Tel: (713) 676-1460
Fax: (713) 676-1676

Transportation Work Ticket

Folder ID : CES Internal Work

Date : 7/30/2009 **Manifest # :**

Client : CES Environmental Services - Port Arthur **Ticket :** 89430

Phone : 7136761460 **Consignee :** CES Environmental Services, Inc.

Transporter : CES Environmental Services, Inc.

Signature **Signature**

Leave CES Yard :	0600	**Arrive At Destination**	1530
Arrive At Customer :	0700	**Begin Unloading :**	
Begin Loading :		**Finish Unloading :**	
Finish Loading :		**Leave Destination :**	1600
Leave Customer :	1350	**Arrive At CES Yard :**	1800

Customer PO #:

Total Hours:

CES Unload: ☐

Gross Weight :		**Ending Odometer :**	49794
Tare Weight :		**Begining Odometer :**	49602
Net Weight :		**Total Miles :**	192

Driver : Wilson, Kevin **Tractor # :** 2004 **Tote # :**

Signature : Kevin Wilson **Trailer # :** 268 **Box # :**

Johnston Airlock 7-30-09

Job Comments/Equipment :

Kevin Wilson Kevin Wilson 7-30-09

White (CES Office) Yellow (CES Office / Billing) Pink (CES Office / IFTA) Golden Rod (Customer)

TH 2004
TR 268

DATE 7-30-09 NO. 643

PORT ARTHUR CHEMICAL ENVIRONMENTAL SERVICES
P.O. BOX 218
2420 SOUTH GULFWAY DRIVE
PORT ARTHUR, TEXAS 77640

PACES JOB # _____

TICKET ID	643	
07/30/2009	01:44:20 pm	
INBOUND WT	77200	lb

DRIVER ON ☐ OFF ☑

WEIGHED BY _____

AUGUST 09

EPAPA010000316

OUTBOUND WASTE MANIFEST

267

Please print or type. (Form designed for use on elite (12-pitch) typewriter.)

Form Approved. OMB No. 2050-0039

UNIFORM HAZARDOUS WASTE MANIFEST

1. Generator ID Number: TXR000079307
2. Page 1 of
3. Emergency Response Phone: (713) 676-1460
4. Manifest Tracking Number: **005593258 JJK**

5. Generator's Name and Mailing Address
CES Environmental Services - Port Arthur State ID: 88885
4914 Griggs Road
Houston, TX 77021
Generator's Phone: (713) 676-1460

Generator's Site Address (if different than mailing address)
CES Environmental Services - Port Arthur
2430 S Gulfway Drive
Port Arthur, TX 77640
(713) 676-1460

6. Transporter 1 Company Name: CES Environmental Services, Inc. State ID 30900
U.S. EPA ID Number: TXD008950461

7. Transporter 2 Company Name
U.S. EPA ID Number

8. Designated Facility Name and Site Address
CES Environmental Services, Inc.
4914 Griggs Rd
Houston TX 77021
Facility's Phone: (713) 676-1460
State ID 30900
U.S. EPA ID Number: TXD008950461

9a. HM	9b. U.S. DOT Description (including Proper Shipping Name, Hazard Class, ID Number, and Packing Group (if any))	10. Containers No.	10. Containers Type	11. Total Quantity	12. Unit Wt./Vol.	13. Waste Codes		
X	1. Non-RCRA/Non DOT regulated wastewater	1	TT	500	G	D001		
	2.							
	3.							
	4.							

14. Special Handling Instructions and Additional Information
Profile ID: CES Disposal Profile
1) PA-3025 2) 3) 4)

This is to certify that the above-named materials are properly classified, described, packaged, marked and labeled, and are in proper condition for transportation according to the applicable regulations of the Department of Transportation. CES Inc. # - 88885

15. **GENERATOR'S/OFFEROR'S CERTIFICATION:** I hereby declare that the contents of this consignment are fully and accurately described above by the proper shipping name, and are classified, packaged, marked and labeled/placarded, and are in all respects in proper condition for transport according to applicable international and national governmental regulations. If export shipment and I am the Primary Exporter, I certify that the contents of this consignment conform to the terms of the attached EPA Acknowledgment of Consent.
I certify that the waste minimization statement identified in 40 CFR 262.27(a) (if I am a large quantity generator) or (b) (if I am a small quantity generator) is true.

Generator's/Offeror's Printed/Typed Name: Joe Contreras
Signature
Month 8 Day 1 Year 07

16. International Shipments ☐ Import to U.S. ☐ Export from U.S. Port of entry/exit:
Transporter signature (for exports only): Date leaving U.S.:

17. Transporter Acknowledgment of Receipt of Materials
Transporter 1 Printed/Typed Name: Kevin Wilson
Signature
Month 8 Day 1 Year 07
Transporter 2 Printed/Typed Name
Signature
Month Day Year

18. Discrepancy
18a. Discrepancy Indication Space ☐ Quantity ☐ Type ☐ Residue ☐ Partial Rejection ☐ Full Rejection
Manifest Reference Number:

18b. Alternate Facility (or Generator)
U.S. EPA ID Number
Facility's Phone:

18c. Signature of Alternate Facility (or Generator)
Month Day Year

19. Hazardous Waste Report Management Method Codes (i.e., codes for hazardous waste treatment, disposal, and recycling systems)

1.	2.	3.	4.
H141			

20. Designated Facility Owner or Operator: Certification of receipt of hazardous materials covered by the manifest except as noted in Item 18a
Printed/Typed Name
Signature
Month Day Year

GENERATOR — INT'L — TRANSPORTER — DESIGNATED FACILITY

EPA Form 8700-22 (Rev. 3-05) Previous editions are obsolete.

GENERATOR'S INITIAL COPY

EPAPA010000318

CES Environmental Services, Inc.

4904 Griggs Road
Houston, TX 77021
Tel. (713) 676-1460
Fax. (713) 676-1676

Transportation Work Ticket

Folder ID : CES Internal Work

Date : 8/1/2009 **Manifest # :**

Client : CES Environmental Services - Port Arthur **Ticket :** 89508

Phone : 7136761460 **Consignee :** CES Environmental Services, Inc.

Transporter : CES Environmental Services, Inc.

Signature **Signature**

Leave CES Yard :	0630	**Arrive At Destination**	1000
Arrive At Customer :	0700	**Begin Unloading :**	
Begin Loading :		**Finish Unloading :**	
Finish Loading :		**Leave Destination :**	
Leave Customer :	0800	**Arrive At CES Yard :**	1230

Customer PO #:

Total Hours:

CES Unload: ☐

Gross Weight :		**Ending Odometer :**	50300
Tare Weight :		***Begining Odometer :***	50108
Net Weight :		**Total Miles :**	192

Driver : Wilson, Kevin **Tractor # :** 2004 **Tote # :**

Signature : **Trailer # :** 225 **Box # :**

Job Comments/Equipment :

White (CES Office) Yellow (CES Office / Billing) Pink (CES Office / IFTA) Golden Rod (Customer)

TK
TR 267

DATE 7-31-09 NO. 649

PORT ARTHUR CHEMICAL ENVIRONMENTAL SERVICES
P.O. BOX 218
2420 SOUTH GULFWAY DRIVE
PORT ARTHUR, TEXAS 77640

PACES JOB #

TICKET ID	649	
07/31/2009	06:22:51 pm	
INBOUND WT	27400	lb
08/01/2009	07:57:17 am	
OUTBOUND WT	73280	lb
NET WT		

DRIVER ON ❑ OFF ❑

WEIGHED BY_____

OSHA

WORK Related Death
folder

EPAPA010000321

OSHA - Inspections and
Subpoenas

EPAPA010000322

EVIDENCE TRANSFER

Establishment: Port Arthur Chemical and Environmental Services

Inspection No.: 311960975

Date Evidence Received by OSHA: 01/06/09

Received From: BRIAN WEATHERS

Date Evidence Released by OSHA:

Released To:

Location of Transfer:

DESCRIPTION OF EVIDENCE

Items were originally removed by the company. The Item(s) will be taken into custody by the Occupational Safety and Health Administration (OSHA) for examination. A description of the item(s) follows:

OSHA No. I975-3: Liquid sample from 18 December 2008 of the contents of the Port Arthur Chemical and Environmental Services' Trailer 267 put in glass container

Transferred From:

Port Arthur Chemical and Environmental Services
2420 South Gulfway Drive
Port Arthur, TX 77640
713-676-1460
FAX

Signature: Brian Weathers

Date: 1/6/09

Transferred To:
Kimi Scarpa
Safety Engineer
U.S. Department of Labor - OSHA
17625 El Camino Real, Ste. 100
Houston, TX 77058
281-286-0583
FAX 281-286-6352

Signature: Kimi Scarpa

Date: 6 Jan 09

OSHA's Form 300A
Summary of Work-Related Injuries and Illnesses

Year 2008

U.S. Department of Labor
Occupational Safety and Health Administration
Form approved OMB no. 1218-0176

All establishments covered by Part 1904 must complete this Summary page, even if no injuries or illnesses occurred during the year. Remember to review the Log to verify that the entries are complete

Using the Log, count the individual entries you made for each category. Then write the totals below, making sure you've added the entries from every page of the log. If you had no cases write "0."

Employees former employees, and their representatives have the right to review the OSHA Form 300 in its entirety. They also have limited access to the OSHA Form 301 or its equivalent. See 29 CFR 1904.35, in OSHA's Recordkeeping rule, for further details on the access provisions for these forms.

Number of Cases

Total number of deaths	Total number of cases with days away from work	Total number of cases with job transfer or restriction	Total number of other recordable cases
1	0	0	0
(G)	(H)	(I)	(J)

Number of Days

Total number of days of job transfer or restriction	Total number of days away from work
0	0
(K)	(L)

Injury and Illness Types

Total number of...
(M)

(1) Injury	0	(4) Poisoning	0
(2) Skin Disorder	0	(5) All other illnesses	0
(3) Respiratory Condition	0		

Establishment information

Your establishment name Port Arthur Chemical Environonmental Services, LLC

Street 2420 South Gulfway Drive

City Port Arthur State TX Zip 77640

Industry description (e.g., Manufacture of motor truck trailers)
Manufcaturing facility

Standard Industrial Classification (SIC), if known (e.g., SIC 3715)
2 8 1 9

Employment information

Annual average number of employees 13

Total hours worked by all employees last year 17622

Sign here

Knowingly falsifying this document may result in a fine.

I certify that I have examined this document and that to the best of my knowledge the entries are true, accurate, and complete.

Company executive — Title: President

Phone: 713-676-1460 — Date: 1/29/2009

Post this Summary page from February 1 to April 30 of the year following the year covered by the form

Public reporting burden for this collection of information is estimated to average 50 minutes per response, including time to review the instruction, search and gather the data needed, and complete and review the collection of information. Persons are not required to respond to the collection of information unless it displays a currently valid OMB control number. If you have any comments about these estimates or any aspects of this data collection, contact: US Department of Labor, OSHA Office of Statistics, Room N-3644, 200 Constitution Ave. NW, Washington, DC 20210. Do not send the completed forms to this office.

EPAPA010000324

OSHA's Form 301
Injuries and Illnesses Incident Report

Attention: This form contains information relating to employee health and must be used in a manner that protects the confidentiality of employees to the extent possible while the information is being used for occupational safety and health purposes.

U.S. Department of Labor
Occupational Safety and Health Administration
Form approved OMB no. 1218-0176

This *Injury and Illness Incident Report* is one of the first forms you must fill out when a recordable work-related injury or illness has occurred. Together with the *Log of Work-Related injuries and Illnesses* and the accompanying *Summary*, these forms help the employer and OSHA develop a picture of the extent and severity of work-related incidents.

Within 7 calendar days after you receive information that a recordable work-related injury or illness has occurred, you must fill out this form or an equivalent. Some state workers' compensation, insurance, or other reports may be acceptable substitutes. To be considered an equivalent form, any substitute must contain all the information asked for on this form.

According to Public Law 91-596 and 29 CFR 1904, OSHA's recordkeeping rule, you must keep this form on file for 5 years following the year to which it pertains

If you need additional copies of this form, you may photocopy and use as many as you need.

Completed by Prabhakar R. Thangudu
Title HSE Manager
Phone 713-676-1460 Date 12/18/2008

Information about the employee

1) Full Name (b) (6) [redacted]
2) Street [redacted]
City [redacted] State TX Zip 75110
3) Date of birth [redacted] (b) (6)
4) Date hired 8/25/2008
5) [X] Male
[ ] Female

Information about the physician or other health care professional

6) Name of physician or other health care professional
Christus St. Mary's Hospital

7) If treatment was given away from the worksite, where was it given?

Facility Christus St. Mary's Hospital
Street 3600 Gates Blvd.
City Port Arthur State TX Zip 77642

8) Was employee treated in an emergency room?
[ ] Yes
[x] No

9) Was employee hospitalized overnight as an in-patient?
[ ] Yes
[x] No

Information about the case

10) Case number from the Log 1 *(Transfer the case number from the Log after you record the case.)*
11) Date of injury or illness 12/18/2008
12) Time employee began work _____ AM/PM
13) Time of event PM AM/PM [ ] Check if time cannot be determined
14) **What was the employee doing just before the incident occurred?** Describe the activity, as well as the tools, equipment or material the employee was using. Be specific. Examples: "climbing a ladder while carrying roofing materials"; "spraying chlorine from hand sprayer"; "daily computer key-entry."
Training an employee
15) **What happened?** Tell us how the injury occurred. Examples: "When ladder slipped on wet floor, worker fell 20 feet"; "Worker was spayed with chlorine when gasket broke during replacement"; "Worker developed soreness in wrist over time."
Empolyee gasped twoice and and started bleeding from his nose.
16) **What was the injury or illness?** Tell us the part of the body that was affected and how it was affected; be more specific than "hurt", "pain", or "sore." Examples: "strained back"; "chemical burn, hand"; "carpal tunnel syndrome."
Not applicable
17) **What object or substance directly harmed the employee?** Examples: "concrete floor"; "chlorine"; "radial arm saw." If this question does not apply to the incident, leave it blank.
None
18) **If the employee died, when did death occur?** Date of death 12/18/2008

Public reporting burden for this collection of information is estimated to average 22 minutes per response, including time for reviewing instructions, searching existing data sources, gathering and maintaining the data needed, and completing and reviewing the collection of information. Persons are not required to respond to the collection of information unless it displays a current valid OMB control number. If you have any comments about this estimate or any other aspects of this data collection, including suggestions for reducing this burden, contact: US Department of Labor, OSHA Office of Statistics, Room N-3644, 200 Constitution Ave, NW, Washington, DC 20210. Do not send the completed forms to this office.

OSHA's Form 300
Log of Work-Related Injuries and Illnesses

Attention: This form contains information relating to employee health and must be used in a manner that protects the confidentiality of employees to the extent possible while the information is being used for occupational safety and health purposes.

Year 2008

U.S. Department of Labor
Occupational Safety and Health Administration

Form approved OMB no. 1218-0176

You must record information about every work-related injury or illness that involves loss of consciousness, restricted work activity or job transfer, days away from work, or medical treatment beyond first aid. You must also record significant work-related injuries and illnesses that are diagnosed by a physician or licensed health care professional. You must also record work-related injuries and illnesses that meet any of the specific recording criteria listed in 29 CFR 1904.8 through 1904.12. Feel free to use two lines for a single case if you need to. You must complete an injury and illness incident report (OSHA Form 301) or equivalent form for each injury or illness recorded on this form. If you're not sure whether a case is recordable, call your local OSHA office for help.

Establishment name Port Arthur Chemical & Environ Services, LLC

City Port Arthur State Texas

Identify the person				Describe the case		Classify the case										
						Using these categories, check ONLY the most serious result for each case:				Enter the number of days the injured or ill worker was:		Check the "Injury" column or choose one type of illness: (M)				
(A) Case No.	(B) Employee's Name	(C) Job Title (e.g., Welder)	(D) Date of injury or onset of illness (mo./day)	(E) Where the event occurred (e.g. Loading dock north end)	(F) Describe injury or illness, parts of body affected, and object/substance that directly injured or made person ill (e.g. Second degree burns on right forearm from acetylene torch)	Death	Days away from work	Remained at work		On job transfer or restriction (days)	Away from work (days)	Injury	Skin Disorder	Respiratory Condition	Poisoning	All other illnesses
								Job transfer or restriction	Other record-able cases							
						(G)	(H)	(I)	(J)	(K)	(L)	(1)	(2)	(3)	(4)	(5)
1	(b) (6)	Technician	12/18/08	PACES Complex	Death (waiting for report)	x										
					Page totals	1	0	0	0	0	0	0	0	0	0	0

Be sure to transfer these totals to the Summary page (Form 300A) before you post it.

	Injury	Skin Disorder	Respiratory Condition	Poisoning	All other illnesses
	(1)	(2)	(3)	(4)	(5)

Public reporting burden for this collection of information is estimated to average 14 minutes per response, including time to review the instruction, search and gather the data needed, and complete and review the collection of information. Persons are not required to respond to the collection of information unless it displays a currently valid OMB control number. If you have any comments about these estimates or any aspects of this data collection, contact: US Department of Labor, OSHA Office of Statistics, Room N-3644, 200 Constitution Ave, NW, Washington, DC 20210. Do not send the completed forms to this office.

EPAPA010000326

OSHA's Form 301
Injuries and Illnesses Incident Report

Attention: This form contains information relating to employee health and must be used in a manner that protects the confidentiality of employees to the extent possible while the information is being used for occupational safety and health purposes.

U.S. Department of Labor
Occupational Safety and Health Administration
Form approved OMB no. 1218-0176

This *Injury and Illness Incident Report* is one of the first forms you must fill out when a recordable work-related injury or illness has occurred. Together with the *Log of Work-Related Injuries and Illnesses* and the accompanying *Summary*, these forms help the employer and OSHA develop a picture of the extent and severity of work-related incidents.

Within 7 calendar days after you receive information that a recordable work-related injury or illness has occurred, you must fill out this form or an equivalent. Some state workers' compensation, insurance, or other reports may be acceptable substitutes. To be considered an equivalent form, any substitute must contain all the information asked for on this form.

According to Public Law 91-596 and 29 CFR 1904, OSHA's recordkeeping rule, you must keep this form on file for 5 years following the year to which it pertains

If you need additional copies of this form, you may photocopy and use as many as you need.

Completed by Prabhakar R. Thangudu
Title HSE Manager
Phone 713-676-1460 Date 12/18/2008

Information about the employee

1) Full Name [redacted] (b) (6)
2) Street [redacted]
City [redacted] State TX Zip 75110
3) Date of birth [redacted] (b) (6)
4) Date hired 8/25/2008
5) [X] Male
[ ] Female

Information about the physician or other health care professional

6) Name of physician or other health care professional
Christus St. Mary's Hospital

7) If treatment was given away from the worksite, where was it given?

Facility Christus St. Mary's Hospital
Street 3600 Gates Blvd.
City Port Arthur State TX Zip 77642

8) Was employee treated in an emergency room?
[ ] Yes
[x] No

9) Was employee hospitalized overnight as an in-patient?
[ ] Yes
[x] No

Information about the case

10) Case number from the Log 1 *(Transfer the case number from the Log after you record the case.)*
11) Date of injury or illness 12/18/2008
12) Time employee began work _____ AM/PM
13) Time of event PM AM/PM [ ] Check if time cannot be determined
14) **What was the employee doing just before the incident occurred?** Describe the activity, as well as the tools, equipment or material the employee was using. Be specific. Examples: "climbing a ladder while carrying roofing materials"; "spraying chlorine from hand sprayer"; "daily computer key-entry."
Training an employee
15) **What happened?** Tell us how the injury occurred. Examples: "When ladder slipped on wet floor, worker fell 20 feet"; "Worker was spayed with chlorine when gasket broke during replacement"; "Worker developed soreness in wrist over time."
Empolyee gasped twoice and and started bleeding from his nose.
16) **What was the injury or illness?** Tell us the part of the body that was affected and how it was affected; be more specific than "hurt", "pain", or "sore." Examples: "strained back"; "chemical burn, hand"; "carpal tunnel syndrome."
Not applicable
17) **What object or substance directly harmed the employee?** Examples: "concrete floor"; "chlorine"; "radial arm saw." If this question does not apply to the incident, leave it blank.
None
18) **If the employee died, when did death occur?** Date of death 12/18/2008

Public reporting burden for this collection of information is estimated to average 22 minutes per response, including time for reviewing instructions, searching existing data sources, gathering and maintaining the data needed, and completing and reviewing the collection of information. Persons are not required to respond to the collection of information unless it displays a current valid OMB control number. If you have any comments about this estimate or any other aspects of this data collection, including suggestions for reducing this burden, contact: US Department of Labor, OSHA Office of Statistics, Room N-3644, 200 Constitution Ave, NW, Washington, DC 20210. Do not send the completed forms to this office.

UNITED STATES DISTRICT COURT
EASTERN DISTRICT OF TEXAS
BEAUMONT DIVISION

United States Courts
Southern District of Texas
FILED
APR 21 2009
Michael N. Milby, Clerk

In the matter of work site at or near	)	
2420 South Gulfway Dr.	)	
Port Arthur, TX 77640	)	
	)	**Inspection Warrant**
under the control or custody of	)	
Port Arthur Chemical	)	
& Environmental Services	)	**Docket No.** H-09-311M

INSPECTION WARRANT

TO: BASIL SINGH AND/OR ANY OTHER DULY APPOINTED COMPLIANCE OFFICERS OF THE OCCUPATIONAL SAFETY AND HEALTH ADMINISTRATION, UNITED STATES DEPARTMENT OF LABOR ("OSHA").

Request having been made and sufficient facts having been presented, the Court, finds probable cause exists to believe that hazardous conditions in violation of the Occupational Safety and Health Act of 1970 and regulations promulgated there under currently exist at the workplace hereinafter described and identified. The Court further finds, based on the facts presented that the proposed scope of the warrant is reasonable. Therefore,

IT IS HEREBY ORDERED that, pursuant to Section 8(a) of the Occupational Safety and Health Act of 1970, 29 U.S.C. § 651 *et seq.*, hereinafter referred to as "the Act", you or your duly designated representatives are authorized to enter the worksite hereinafter described within ten (10) days for the purpose of conducting a fatality/catastrophe inspection. The inspection shall be conducted during regular working hours and at other reasonable times, within reasonable limits and in a reasonable manner.

TRUE COPY I CERTIFY
ATTEST:
Michael N. Milby, Clerk of Court
By: Mercedes P. Lerma
Deputy Clerk

1. Said inspection shall extend to all pertinent conditions, structures, machines, apparatus, devices, equipment, and materials necessary to determine if employees are exposed to safety and health hazards.

2. Compliance personnel shall be permitted to question privately any employer, owner, operator, agent, or employee.

3. Compliance personnel shall be permitted to review records (excluding employee medical records), including those required by 29 U.S.C. § 657(c) and regulations promulgated pursuant thereto, which are directly related to the purpose of the inspection.

4. Compliance personnel shall be permitted to take photographs and/or videotapes related to the purpose of the inspection.

5. Compliance personnel shall be permitted to affix to employees, who agree to wear testing and/or sampling equipment, such testing and/or sampling equipment as is reasonable necessary to effectuate the purpose of the inspection and to conduct such other testing and/or sampling as is reasonably necessary to effectuate the purpose of the inspection.

SCOPE OF INSPECTION:

The scope of this inspection is all conditions, structures, machines, apparatus, devices, equipment, materials, processes, controls, facilities, records and files pertaining to the circumstances of the accident at the work place specified herein.

EPAPA010000329

DESCRIPTION OF WORKPLACE:

2420 South Gulfway Drive
Port Arthur, TX 77640

No return of this warrant need be made.

DATED this 21st day of April, 2009.

Gail Burry
UNITED STATES MAGISTRATE JUDGE

United States Courts
Southern District of Texas
FILED
APR 21 2009
Michael N. Milby, Clerk

IN THE UNITED STATES DISTRICT COURT
EASTERN DISTRICT OF TEXAS
BEAUMONT DIVISION

In the matter of the inspection of the worksite located at or near	)	**Inspection Warrant** H09-311M
2420 South Gulfway Dr Port Arthur, TX 77640	)	
under the control or custody of Port Arthur Chemical & Environmental Services LLC	)	**Docket No.**

REQUEST FOR INSPECTION WARRANT UNDER THE OCCUPATIONAL SAFETY AND HEALTH ACT OF 1970

To: UNITED STATES MAGISTRATE JUDGE

Attached hereto is a proposed affidavit of Basil Singh, Compliance Officer, Occupational Safety and Health Administration (hereinafter referred to as "OSHA"), United States Department of Labor, Houston South Area Office.

1. I have read the Affidavit of CSHO Singh. To the best of my knowledge and information the affidavit shows reason to believe the employer for whom the inspection warrant is sought is engaged in a business affecting commerce, is within the jurisdiction of the Occupational Safety and Health Act of 1970, 29 U.S.C. § 651 *et seq.* (hereinafter referred to as the "Act"), is presently failing to furnish to each of his employees employment and a place of employment which are free from recognized hazards that are causing or are likely to cause death or serious physical harm to said employees, was selected for an inspection due to a fatality at the workplace.

I HEREBY COPY I CERTIFY
ATTEST:
Michael N. Milby, Clerk of Court
By: Mercedes P. Lerma
Deputy Clerk

EPAPA010000331

2. The authority for issuance of the administrative search warrant is Section 8(a) of the Act and *Marshall v. Barlow's, Inc.*, 436 U.S. 307, 98 S.Ct.1816 (1978).

3. Sections 8(a)(1) and 8(a)(2) of the Act specifically authorize the Secretary of Labor to make inspections and investigations at any reasonable time, at any plant, factory, establishment, construction site, or other area, workplace or environment where work is performed by an employee of any employer.

4. When the proposed affidavit has been properly sworn to and subscribed to in your presence, we request that you issue an Inspection Warrant authorizing the Area Director, Supervisor or any duly appointed Compliance Officer to enter the workplace described below for the purpose of conducting a fatality inspection.

5. The inspection shall begin within ten (10) days and shall be conducted and finished within a reasonable time. The inspection shall be conducted during regular working hours and at other reasonable times, within reasonable limits and in a reasonable manner. The inspection shall extend to all pertinent conditions, structures, machines, apparatus, devices, equipment, and materials therein necessary to effectuate its purpose. The compliance personnel shall be permitted to question privately any employer, owner, operator, agent or employee, as authorized by 29 U.S.C. § 657(a)(2).

6. Compliance personnel shall also be permitted to take photographs and videotapes related to the purposes of the inspection and to review records (excluding employee medical records), including those required by 29 U.S.C. § 657(c) and regulations promulgated pursuant thereto, which are directly related to the purpose of the inspection.

EPAPA010000332

7. The compliance personnel shall also be permitted to affix to employees of said employer, who agree to wear testing and/or sampling equipment, such testing and/or sampling equipment as is reasonably necessary to effectuate the purpose of the inspection and to conduct such other testing and/or sampling as is reasonably necessary to effectuate same.

SCOPE OF INSPECTION:

The scope of this inspection is all conditions, structures, machines, apparatus, devices, equipment, materials, processes, controls, facilities, records and files pertaining to the circumstances of the accident at the work place specified herein.

DESCRIPTION OF WORKPLACE:

2420 South Gulfway Drive
Port Arthur, TX 77640

DATE: April 17, 2009

Respectfully Submitted,

CAROL A. DE DEO
Deputy Solicitor for National Operations

JAMES E. CULP
Regional Solicitor

MADELEINE T. LE
Counsel for Occupational Safety and Health

By:

Michael D. Schoen
Senior Trial Attorney

Address:
U.S. Department of Labor
Office of the Solicitor
525 S. Griffin Street, Suite 501
Dallas, Texas 75202
Telephone: (972)850-3100
Facsimile: (972) 850-3101

SOL Case No.

EPAPA010000333

IN THE UNITED STATES DISTRICT COURT
EASTERN DISTRICT OF TEXAS
BEAUMONT DIVISION

United States Courts
Eastern District of Texas
APR 21 2009
Michael N. Milby, Clerk

In the matter of the inspection of the worksite located at or near	)	**Inspection Warrant**
2420 South Gulfway Drive Port Arthur, TX 77640	)	
under the control or custody of Port Arthur Chemical & Environmental Services, LLC	)	**Docket No.** H-09-311M

AFFIDAVIT

I, Basil Singh, a duly authorized compliance officer of the Houston South Area Office, Occupational Safety and Health Administration, United States Department of Labor, hereby apply for an administrative search warrant, pursuant to Section 8(a) of the Occupational Safety and Health Act, 29 U.S.C. § 651 *et seq.*, (hereinafter referred to as "the Act") for the purpose of conducting a fatality inspection of the workplace located at 2420 South Gulfway Drive, Port Arthur, TX and described as the workplace where Port Arthur Chemical & Environmental Services LLC is believed to be engaged in the transportation, treatment and processing of chemical wastes. As a basis therefore, I state as follows:

1. I am a duly appointed Compliance Safety and Health Officer of the Occupational Safety and Health Administration, United States Department of Labor. It is a part of my official duties to conduct investigations concerning unsafe and unhealthful conditions at workplaces as authorized by the provisions of 29 U.S.C. § 657 and the regulations issued pursuant to the Occupational Safety and Health Act, 29 U.S.C. § 651, *et seq.*

TRUE COPY I CERTIFY
ATTEST:
Michael N. Milby, Clerk of Court
By: Mercedes P. Lerma
Deputy Clerk

2. Port Arthur Chemical & Environmental Services LLC located at 2420 South Gulfway Drive, Port Arthur, TX, is engaged in the business of transportation, treatment and processing of chemical wastes.

3. Port Arthur Chemical & Environmental Services LLC is an employer within the meaning of Section 3(5) of the Act in that it employs employees within the meaning of Section 3(6) of the Act, in a business affecting commerce, and is under and subject to the duties imposed by Section 5(a) of the Act.

4. The purpose of this inspection is to determine whether the conditions existing at the workplace controlled by this employer are in compliance with Section 5(a)(1) and 5(a)(2) of the Act and the applicable regulations regarding safety and health hazards. Section 5(a)(1) requires an employer to furnish to each of his employees employment and a place of employment which is free from recognized hazards that are causing or likely to cause death or serious physical harm to his employees. Section 5(a)(2) requires the employer to comply with occupational safety and health standards promulgated under the Act and found at 29 CFR § 1900 *et seq.*

5. Sections 8(a)(1) and 8(a)(2) of the Act are implemented in part by OSHA Instruction CPL 02-00-148, Field Operations Manual (hereinafter "FOM"), Chapter 3, Inspection Procedures, which directs the inspection efforts of the agency. The FOM is attached as Exhibit A and incorporated by reference.

6. The FOM establishes inspection priorities of the agency and the order of those priorities. The agency's first priority of accomplishment and assignment of manpower resources for inspections shall be imminent danger situations and its second priority shall be fatality and catastrophe investigations.

7. The FOM Chapter 11 at ¶ II.C.1., attached hereto as Exhibit B and incorporated herein, provides that fatalities and catastrophes shall be thoroughly investigated to attempt to determine the cause of the event, whether a violation of OSHA safety or health standards or the general duty clause has occurred, and any effect the violation had on the accident.

8. On April 14, 2009, Michele Bertrand of the Southeast Texas Forensic Center in Beaumont reported to the Houston South Area Office that a fatality had occurred at the Port Arthur Chemical & Environmental Services LLC (PACES) site. Anissa Wright of PACES later reported the same fatality to OSHA's 1-800 hotline number. This information was passed on to Assistant Area Director Figueroa of the Houston South Area Office by the hotline operator.

9. On April 14, 2009, I, Compliance Officer Basil Singh, after identifying myself, presenting my credentials, stating the purpose of my visit, and requesting permission to make an inspection at the worksite, was granted permission to proceed with the inspection and conducted portions of the inspection on the evening of April 14, 2009 and April 15, 2009. I returned to the PACES site with Compliance Officer Donald Frost on April 16, 2009, with the intent to continue the inspection, and conduct interviews with hourly employees who were previously unavailable. I was denied permission to do so by Matt Bowman, Registered Agent of Port Arthur Chemical & Environmental Services LLC. Mr. Bowman stated that I could not enter the site or conduct

interviews without prior coordination with the Company's Attorney Mr. Howell Cobb, III of Germer Gertz, LLP, 550 Fannin Suite 500, Beaumont, TX 77701.

Respectfully Submitted,

Basil Singh
Compliance Safety and Health Officer
Occupational Safety and Health Administration
Houston South Area Office

Sworn to before me and subscribed in my presence this 21st day of April, 2009.

UNITED STATES MAGISTRATE JUDGE

SOL Case No. 09-00706

EPAPA010000337

U.S. Department of Labor

Occupational Safety & Health Administration
Houston South Area Office
17625 El Camino Real Suite 400
Houston, Texas 77058
281/286-0583 Fax: 281/286-6352

U.S. Department of Labor

Occupational Safety & Health Administration
Houston South Area Office
17625 El Camino Real Suite 400
Houston, Texas 77058
281/286-0583 Fax: 281/286-6352

April 27, 2009

Port Arthur Chemical & Environment Services.
2420 Gulfway Dr
Port Arthur, TX 77640

Attn: Mr. Matt Bowman

SUBJECT: OSHA DOCUMENT REQUEST #1
INSPECTION NUMBER 311962484

Dear Mr. Bowman:

In order to facilitate the inspection, following documents in Attachment A are being requested by the OSHA inspection team.

Please provide the documents on or before **May 11, 2009**. Should you have any questions, please contact our office at (281) 286-0583. Thank you for your time and cooperation in this matter.

Sincerely,

Mark R. Briggs
Area Director HSAO

UNITED STATES OF AMERICA

DEPARTMENT OF LABOR

OCCUPATIONAL SAFETY AND HEALTH ADMINISTRATION

SUBPOENA DUCES TECUM

TO: CUSTODIAN OF RECORDS FOR Port Arthur Chemical & Environment Services

Pursuant to Section 8(b) of the Occupational Safety and Health Act, 29 U.S.C. §657(b), you are hereby required to produce to Mark R. Briggs, Area Director, or his/her designee at 17625 El Camino Real, Suite 400, Houston, TX 77058 on the **11th** day of **May 2009**, at **1:00 p.m.** of that day, to produce documents, records, and/or things regarding the working conditions at: Port Arthur Chemical & Environment Services located at 2020 Gulfway Dr Port Arthur, TX 77640, on or about April 14, 2009.

You are herby required to bring with you, produce at said time, and place the following items: as specifically described in Attachment #1, items 1 through 17, which is made a part of this subpoena. All documents and things identified in Attachment A.

Whether or not form is specified in the individual requests below, the terms "document" and "record" shall each mean any written, printed, typed, photographic or other graphic matter or material of any kind or nature and all mechanical or electronic sound or video recordings or transcripts thereof, in the possession, custody and/or control of the Respondent or known by the Respondent to exist, and shall also mean all copies of documents by whatever means made, including, but not limited to, papers, letters, correspondence, accident/incident reports, photographs, video recordings, audio recordings, digital recordings, drawings, sketches, maps, diagrams, interoffice communications, emails or other electronically-sent messages, memoranda, notes, notations, notebooks, reports, records, accounting books or records, schedules, tables, charts, transcripts, publications, scrapbooks, diaries, and any drafts, revisions or amendments of the above.

FAIL NOT AT YOUR PERIL

*IN TESTIMONY WHEREOF I have hereunto affixed my signature and the seal of the UNITED STATES DEPARTMENT OF LABOR at Houston, Texas this **27th** day of **April 2009***

Mark R. Briggs,
Area Director
OCCUPATIONAL SAFETY AND HEALTH ADMINISTRATION
UNITED STATES DEPARTMENT OF LABOR

NOTICE TO WITNESS: If a claim is made for witness fees or mileage, this subpoena should accompany voucher.

ATTACHMENT A

Item	Description	Date received
1	Injury & Illness Logs(OSHA 300 & 300a) Past 5 years	
2	Plant/ Facility Layout	
3	MSDS for any and all process chemicals at Port Arthur Chemical & Environment Services (PACES), including but not limited to handling, sampling and storing.	
4	Written process overview explaining the process at the PACES	
5	List of quantities of all chemicals (Hazardous and non-Hazardous), locations (where) and type of storage (how).	
6	All safety and health programs, including but not limited to respiratory protection, permit required confine space. Lockout/tagout, hazardous communication program, emergency action plans rescue operation in effect at this site on December 18, 2009.	
7	Process chemistry for the processing of naphthenic caustic, sulfurized isobutylene(SIB Oil)	
8	Process flow diagram for all process at the PACES	
9	Any and all batch records for the process from December 16, 2008 to April 16, 2009	
10	Specific sampling procedures for extracting samples from trailers as it exited on December 18, 2008.	
11	Specific sampling procedures for extracting samples from trailers as it exited on April 14, 2009.	
12	Hydrogen sulfide program / practices.	
13	PPE (personal protective equipment) assessment and certification.	
14	PPE requirement for taking samples including but not limited to trailers, tanks or vessels.	
15	Document, which identify the location of all or any monitoring equipment/ systems on the interior / exterior of the facility.	
16	Documents which provide location , contents, quantities of contents including but not limited to all process vessels, separators, centrifuges, tanks, piping, pumps, pollution prevention equipment	
17	Any and all training records of the decedents, all samplers (operators), mechanics, lab employees and supervisors.	

TCEQ

EPAPA010000341

AIR

NASH

PBR

ENVIRONMENTAL PROFESSIONALS

WCM

The WCM Group, Inc.

September 11, 2008

Air Permits Initial Review Team (APIRT), MC-161
Texas Commission on Environmental Quality
12100 Park 35 Circle, Building C, Third Floor
Austin, Texas 78753

LONE STAR
AIRBILL NUMBER
41016267

Reference: Registration of Permits-By-Rule
CN600618946
CES Environmental Services, Inc.
2420 South Gulfway Drive
Port Arthur, Jefferson County, Texas

Dear Sir or Madam:

On behalf of CES Environmental Services, Inc. (CES), please find enclosed documentation to authorize the production of sodium hydrosulfide under Permits-By-Rule §106.261, §106.262, §106.472, §106.475 and §106.492. A copy of the previously submitted Texas Commission on Environmental Quality CORE Data form is enclosed.

If you have questions regarding this registration, or require further information, please do not hesitate to contact Mr. Matt Bowman of CES at (713) 676-1460, or me directly at (281) 446-7070.

Sincerely,

Philip B. Evans

Philip B. Evans
Director, Technical Services

PBE/tv
27159:5330015.let.doc

Enclosure

cc: M. Bowman
L. Vasse
B. Allen

P.O. Box 3247, Humble, TX 77347-3247 Tel (281) 446-7070 Fax (281) 446-3348 110 Bender Ave., Humble, TX 77338

ENVIRONMENTAL PROFESSIONALS

WCM

The WCM Group, Inc.

September 11, 2008

Mr. John Racanelli
Revenue Section (MC-214)
TEXAS COMMISSION ON ENVIRONMENTAL QUALITY
12100 Park 35 Circle, Building F, Room 1206
Austin, Texas 78753

LONE STAR
AIRBILL NUMBER
41016268

Reference: Registration of Permit-By-Rule
CN600618946
CES Environmental Services, Inc.
2420 South Gulfway Drive
Port Arthur, Jefferson County, Texas

Dear Mr. Racanelli:

On behalf of CES Environmental Services, Inc., please find enclosed a check in the amount of $450 to cover the fee for the above referenced Permit-By-Rule (PBR) registration. A copy of the PI-7-CERT Form is also enclosed.

If you have questions regarding this registration, or require further information, please do not hesitate to contact Mr. Matt Bowman of CES at (713) 676-1460, or me directly at (281) 446-7070.

Sincerely,

Philip B. Evans

Philip B. Evans
Director, Technical Services

PBE/tv
27159:5330015.let.doc

Enclosure

cc: M. Bowman
L. Vasse
B. Allen

P.O. Box 3247, Humble, TX 77347-3247 Tel (281) 446-7070 Fax (281) 446-3348 110 Bender Ave., Humble, TX 77338

THE WCM GROUP INC.
PETTY CASH ACCOUNT
P.O. BOX 3247
HUMBLE, TX 77347-3247

Comerica
Comerica Bank - Texas
Houston, Texas
www.comerica.com

1416

32-75/1110
787

DATE September 11, 2008

PAY Four Hundred Fifty Dollars and no/100 ---------- DOLLARS $ 450.00

TO THE ORDER OF
Texas Commission on Environmental Quality
12100 Park 35 Circle
Austin, TX 78753

TWO SIGNATURES REQUIRED
NO CHECKS ALLOWED OVER $5,000.00

Susan C Howell

⑈001416⑈ ⑆111000753⑆ (b) (6) [redacted]

THE WCM GROUP INC.
PETTY CASH ACCOUNT
HUMBLE, TX 77347-3247

DETACH AND RETAIN THIS STATEMENT
THE ATTACHED CHECK IS IN PAYMENT OF ITEMS DESCRIBED BELOW
IF NOT CORRECT, PLEASE NOTIFY US PROMPTLY. NO RECEIPT DESIRED

DATE	DESCRIPTION	AMOUNT
9/11/08	PBR Registration	$450.00
	CES-PA-PBR	

A2

PERMIT-BY-RULE AUTHORIZATION FOR

SODIUM HYDROSULFIDE PRODUCTION

Prepared for
CES ENVIRONMENTAL SERVICES, INC.
Port Arthur, Jefferson County, Texas

Prepared by
THE WCM GROUP, INC.
Humble, Texas

September 2008

PERMIT-BY-RULE AUTHORIZATION FOR

SODIUM HYDROSULFIDE PRODUCTION

Prepared for
CES ENVIRONMENTAL SERVICES, INC.
Port Arthur, Jefferson County, Texas

TABLE OF CONTENTS

Page

INTRODUCTION iii

1.0 PROCESS DESCRIPTION 1

2.0 EMISSIONS SUMMARY 2

3.0 PERMIT-BY-RULE APPLICABILITY 3

ATTACHMENTS

A - EMISSION CALCULATIONS

TCEQ FORMS AND TABLES

TCEQ CORE DATA FORM

PI-7-CERT FORM

TCEQ §106.4 CHECKLIST

TCEQ §106.261 CHECKLIST

TCEQ §106.262 CHECKLIST

TCEQ §106.472 CHECKLIST

TCEQ §106.492 CHECKLIST

TCEQ TABLE 8

FIGURES

1 - AREA MAP

2 - FACILITY SITE PLAN

3 - PROCESS FLOW DIAGRAM

4 - TORNADO FLARE SCHEMATIC

EPAPA010000350

INTRODUCTION

CES Environmental Services, Inc. (CES) intends to construct and operate equipment for use in the batch production of sodium hydrosulfide (NaSH) on a property located at 2420 Gulfway Drive south of Port Arthur in Jefferson County, Texas. CES is submitting the enclosed documentation to demonstrate Permit-By-Rule (PBR) authorization for the production equipment and associated emissions. Currently, there are no other active emission sources at the site.

The production process involves the initial oxidation and acidification of an aqueous feed stream composed of dissolved sodium salts and sulfurized isobutylene oil. The reaction overhead is then routed via closed system to a sodium hydroxide solution where it is further reacted to produce the sodium hydrosulfide (NaSH) solution. The product is loaded into tank trucks or isocontainers and shipped off-site. Operational details are found in the Process Description section of this registration.

The CES facility is located in the Beaumont/Port Arthur ozone nonattainment area and will be classified as a minor source for emissions of Volatile Organic Compound (VOC) and Nitrogen Oxides (NO_X). The emissions associated with this project are calculated as 1.14 tons per year of VOC and 3.33 tons per year of NO_X. Federal nonattainment and PSD program requirements do not apply.

A PI-7-CERT Form with Texas Commission on Environmental Quality (TCEQ) §106.4, §106.261, §106.262, §106.472, and §106.492 Checklists are provided in the Forms section of this report. Emission calculations are provided in Attachment A. The figures section provides an Area Map, Facility Site Plan, Process Flow Diagram, and Tornado Flare Schematic.

EPAPA010000351

1.0 PROCESS DESCRIPTION

An aqueous feed stream composed of dissolved sodium salts (sodium sulfide, sodium hydrosulfide, sodium hydroxide, sodium carbonate) and sulfurized isobutylene is delivered to the facility in tank trucks or isocontainers. The feed is batch transferred from the shipping container into a closed 45,000-gallon mix reactor vessel (T1) using a tank-to-tank vapor exchange (vapor balance). The material may also be routed through a 14,000-gallon oil/water separator (T9) to remove residual oil as needed prior to processing. The mix reactor contents can also be circulated through the oil\ water separator and back if required.

A 30% solution of hydrogen peroxide is transferred from a 7,000-gallon fixed roof tank (T2) to a smaller 500-gallon dilution vessel (T3) where it is diluted to a 10% solution. The dilute hydrogen peroxide is introduced into the mix reactor to oxidize the residual SIB oil. Sulfuric acid is then added from a 10,000-gallon fixed roof tank (T4) to react with the caustic sodium salts, maintaining the solution at pH 4. The reaction overhead flows from the mix vessel through a closed 6,000-gallon liquid collection (knock out) vessel (T6) and on to a second 6,000-gallon vessel (T7) containing a strong caustic solution (35% sodium hydroxide) for conversion to the sodium hydrosulfide (NaSH) product. The process vents to a caustic scrubber and then to a flare (FL1) to control any non-reacted sulfidic vapors. The caustic solution is supplied from a 8,000-gallon fixed roof tank (T-5). The aqueous sodium hydrosulfide product is transferred directly from the product collection tank (T7) into tank trucks or isocontainers and shipped off-site to the customer. Process wastewater solutions remaining in the mix reactor (T1) and collected in the overflow vessel (T6) are transferred to a 39,000-gallon wastewater tank (T8) for storage prior to off-site shipment. The wastewater is an aqueous solution of inorganic reaction salts.

The flare (FL1) is a three (3) inch diameter forty (40) foot tall air assisted smokeless gas flare equipped with supplemental fuel system and a continuously burning pilot. The pilot gas and supplemental fuel are propane supplied from a horizontal pressure storage vessel (T10). In addition to residual un-reacted overheads, the flare is used to control displacement losses from the oil/water separator vessel (T9) while the batch process is operating. When the batch process is not operated, collected oil is transferred to tank trucks or isocontainers for off-site shipment. Vapor balance is employed during this transfer to minimize emissions.

EPAPA010000352

2.0 EMISSIONS SUMMARY

Emissions associated with the project include those generated from storage, processing, and transfer operations, as well as from potential fugitive equipment and piping component leaks. Displacement losses from material transfers are minimized using vapor balance. The reaction overhead composed of sulfidic compounds generated in the mix reactor (T1) flows through a closed vent system into the NaSH production vessel (T7) where it is converted to the product by reaction with caustic solution. There is no intermediate storage or handling of the overhead stream between the point of generation and the point of conversion. The only emissions are potential fugitive piping leaks. To account for the fugitive emissions of the sulfur containing reaction overhead, hydrogen sulfide is used as a worst-case representative compound. The vent from the NaSH production vessel is routed through an abatement train consisting of a caustic scrubber and flare to control any non-reacted sulfides. Based on sample results from pilot operations, the vent from the scrubber to the flare will contain less than 24 ppm of total sulfur compounds.

Fugitive emissions from potential leaks at valves, pumps, connections and other equipment associated with this project are calculated using the methods and emission factors specified in the TCEQ document "Air Permit Technical Guidance for Chemical Sources: Equipment Leak Fugitives". Reduction credit is taken for operations personnel monitoring the operations for leaks that can be detected by audible, visible or olfactory means.

Emission Summary

Pollutant	TPY
VOC	1.14
NO_X	3.33

EPAPA010000353

3.0 PERMIT-BY-RULE APPLICABILITY

PROJECT CHEMICALS SUMMARY

CAS No.	Chemical	PBR
772-84-1	Hydrogen peroxide	106.262
68511-50-2	Sulfonated Isobutylene	106.261
1313-82-2	Sodium Sulfide	106.472
1310-73-2	Sodium Hydroxide	106.472
497-19-8	Sodium Carbonate	106.472
7664-93-9	Sulfuric Acid solution	106.472
16721-80-5	Sodium Hydrosulfide	106.472
8012-95-1	Oil	106.472

PROJECT EQUIPMENT SUMMARY

Status	FIN	Description	Project Use	PBR
new	T1	45,000-gal capacity horizontal tank	Mix Reactor Vessel	106.261/262
new	T2	7,000-gal capacity Horz Fixed Roof Tank	30% Hydrogen Peroxide storage	106.262
new	T3	550-gal capacity Vert Fixed Roof Tank	10% Hydrogen Peroxide storage	106.262
new	T4	10,000-gal capacity horizontal tank	Sulfuric Acid storage	106.472 (5)
new	T5	8,000-gal capacity horizontal tank	Sodium Hydroxide storage	106.472 (3)
new	T6	6,000-gal capacity Vert Fixed Roof Tank	Liquid Collection tank	106.262
new	T7	6,000-gal capacity Vert Fixed Roof Tank	Product Collection tank	106.262
new	T8	39,000-gal capacity horizontal tank	Wastewater storage	106.472 (3)
new	T9	Oil water separator	Oil separation and storage	106.472 (3)
new	TTL	Tank Truck/Isocontainer loading/unloading	Material loading/unloading	106.472
new	N/A	Caustic scrubber	Vent control	N/A
new	FL1	Flare	Vent control	106.492
new	T10	Horizontal Pressure Storage Tank	Propane (LPG) fuel storage	106.475

EPAPA010000354

COPY

TCEQ Core Data Form

TCEQ Use Only

For detailed instructions regarding completion of this form, please read the Core Data Form Instructions or call 512-239-5175.

SECTION I: General Information

1. Reason for Submission *(If other is checked please describe in space provided)*

☑ New Permit, Registration or Authorization *(Core Data Form should be submitted with the program application)*

☐ Renewal *(Core Data Form should be submitted with the renewal form)* ☐ Other

2. Attachments **Describe Any Attachments:** *(ex. Title V Application, Waste Transporter Application, etc.)*

☐ Yes ☑ No

3. Customer Reference Number *(if issued)*	Follow this link to search for CN or RN numbers in Central Registry**	4. Regulated Entity Reference Number *(if issued)*
CN		RN

SECTION II: Customer Information

5. Effective Date for Customer Information Updates (mm/dd/yyyy) 07/01/2008

6. Customer Role (Proposed or Actual) – *as it relates to the Regulated Entity listed on this form. Please check only one of the following:*

☐ Owner ☐ Operator ☑ Owner & Operator
☐ Occupational Licensee ☐ Responsible Party ☐ Voluntary Cleanup Applicant ☐ Other: _____

7. General Customer Information

☑ New Customer ☐ Update to Customer Information ☐ Change in Regulated Entity Ownership
☐ Change in Legal Name (Verifiable with the Texas Secretary of State) ☐ No Change**

If "No Change" and Section I is complete, skip to Section III – Regulated Entity Information.

8. Type of Customer:	☑ Corporation	☐ Individual	☐ Sole Proprietorship- D.B.A
☐ City Government	☐ County Government	☐ Federal Government	☐ State Government
☐ Other Government	☐ General Partnership	☐ Limited Partnership	☐ Other: _____

9. Customer Legal Name *(If an individual, print last name first: ex: Doe, John)* *If new Customer, enter previous Customer below* *End Date:*

CES Environmental Services, Inc. (Port Arthur)

10. Mailing Address: 2420 South Gulfway Drive

City: Port Arthur State: TX ZIP: 77641 ZIP + 4:

11. Country Mailing Information *(if outside USA)*

12. E-Mail Address *(if applicable)* pthanguduu@cesenvironmental.com

13. Telephone Number (281) 433-9792

14. Extension or Code

15. Fax Number *(if applicable)* (713) 676-1676

16. Federal Tax ID *(9 digits)* 760592985

17. TX State Franchise Tax ID *(11 digits)* 17605929854

18. DUNS Number *(if applicable)* 001736581

19. TX SOS Filing Number *(if applicable)*

20. Number of Employees

☑ 0-20 ☐ 21-100 ☐ 101-250 ☐ 251-500 ☐ 501 and higher

21. Independently Owned and Operated?

☑ Yes ☐ No

SECTION III: Regulated Entity Information

22. General Regulated Entity Information *(If 'New Regulated Entity' is selected below this form should be accompanied by a permit application)*

☑ New Regulated Entity ☐ Update to Regulated Entity Name ☐ Update to Regulated Entity Information ☐ No Change** *(See below)*

If "NO CHANGE" is checked and Section I is complete, skip to Section IV, Preparer Information.

23. Regulated Entity Name *(name of the site where the regulated action is taking place)*

CES Environmental Services, Inc. (Port Arthur)

EPAPA010000355

COPY

24. Street Address of the Regulated Entity: (No P.O. Boxes)	2420 South Gulfway Drive						
	City	Port Arthur	State	TX	ZIP	77641	ZIP + 4
25. Mailing Address:	2420 South Gulfway Drive						
	City	Port Arthur	State	TX	ZIP	77641	ZIP + 4
26. E-Mail Address:	pthangudu@cesenvironmental.com						

27. Telephone Number	28. Extension or Code	29. Fax Number (if applicable)
(281) 433-9792		(713) 676-1676

30. Primary SIC Code (4 digits)	31. Secondary SIC Code (4 digits)	32. Primary NAICS Code (5 or 6 digits)	33. Secondary NAICS Code (5 or 6 digits)
2819	2992	325188	324191

34. What is the Primary Business of this entity? *(Please do not repeat the SIC or NAICS description.)*

Chemical manufacturing

Questions 34 – 37 address geographic location. Please refer to the instructions for applicability.

35. Description to Physical Location:	N/A - Street Address (See #24)		
36. Nearest City	County	State	Nearest ZIP Code
Port Arthur	Jefferson	TX	77641

37. Latitude (N) In Decimal:			38. Longitude (W) In Decimal:		
Degrees	Minutes	Seconds	Degrees	Minutes	Seconds
29	49	47.71	93	57	48.15

39. TCEQ Programs and ID Numbers Check all Programs and write in the permits/registration numbers that will be affected by the updates submitted on this form or the updates may not be made. If your Program is not listed, check other and write it in. See the Core Data Form instructions for additional guidance.

☐ Dam Safety	☐ Districts	☐ Edwards Aquifer	☐ Industrial Hazardous Waste	☐ Municipal Solid Waste
☐ New Source Review – Air	☐ OSSF	☐ Petroleum Storage Tank	☐ PWS	☐ Sludge
☐ Stormwater	☐ Title V – Air	☐ Tires	☐ Used Oil	☐ Utilities
☐ Voluntary Cleanup	☐ Waste Water	☐ Wastewater Agriculture	☐ Water Rights	☒ Other: Industrial Solid Waste

SECTION IV: Preparer Information

40. Name:	Prabhakar R. Thangudu	41. Title:	HSE Manager

42. Telephone Number	43. Ext./Code	44. Fax Number	45. E-Mail Address
(281) 433-9792		(713) 676 1676	pthangudu@cesenvironmental.com

SECTION V: Authorized Signature

46. By my signature below, I certify, to the best of my knowledge, that the information provided in this form is true and complete, and that I have signature authority to submit this form on behalf of the entity specified in Section II, Field 9 and/or as required for the updates to the ID numbers identified in field 39.

(See the Core Data Form instructions for more information on who should sign this form.)

Company:	CES Port Arthur	Job Title:	HSE Manager
Name (In Print):	Prabhakar R. Thangudu	Phone:	(281) 433-9792
Signature:	Prabhakar R Thangudu	Date:	8-12-2008

EPAPA010000356

ATTACHMENT A

EMISSION CALCULATIONS

CES ENVIRONMENTAL SERVICES, INC. - PORT ARTHUR
SUMMARY OF EMISSIONS AND PBR APPLICABILITY DOCUMENTATION

PBR 106.472

Chemical	Storage lb/hr	Storage TPY	Fugitives lb/hr	Fugitives TPY	Total lb/hr	Total TPY	
Sodium Sulfide	0.0000	0.0000	0.0000	0.0000	0.0000	0.0000	
Sodium Hydroxide	0.0129	0.0619	0.0000	0.0000	0.0129	0.0619	
Sodium Carbonate	0.0000	0.0000	0.0000	0.0000	0.0000	0.0000	
Sulfuric Acid	0.0000	0.0000	0.0000	0.0000	0.0000	0.0000	
Sodium Hydrosulfide	0.0002	0.1120	0.0000	0.0000	0.0002	0.1120	
Salts	1.0885	0.4084	0.0000	0.0000	1.0885	0.4084	
Oil	0.0002	0.0351	0.0000	0.0000	0.0002	0.0351	
					1.1016	0.5823	non-VOC
					0.0304	1.1368	VOC

PBR 106.492 Flare Combustion

NOX		0.7606	**3.3316**	NOx
CO		0.0255	6.6511	CO
SO2		0.0535	0.2344	SO2

PBR 106.261 / 106.262

Chemical	Storage lb/hr	Storage TPY	Fugitives lb/hr	Fugitives TPY	Total lb/hr	Total TPY
SIB Oil	0.0248	1.0781	0.0054	0.0237	0.0302	1.1017
Hydroxide Peroxide	0.0032	0.8396	0.0011	0.0046	0.0042	0.8442
Hydrogen Sulfide	N/A	N/A	0.0053	0.0234	0.0053	0.0234

3.1134	14.5229	TOTAL
0.0304	**1.1368**	VOC

PBR Compliance

Chemical	Applicable PBR	TLV mg/m^3	PBR Allowable lb/hr	PBR Allowable TPY	PBR Compliance lb/hr	PBR Compliance TPY
SIB Oil	106.261	0	1.0000	10.0	YES	YES
Hydrogen peroxide	106.262	1.4	0.008	5.0	YES	YES
Hydrogen sulfide	106.262	1.1	0.0065	5.0	YES	YES

PBR Allowables:		lb/hr	ton/yr
	106.261	1.0	10.0
	106.262	E=L/K	5.0

L = TLV (mg/m^3)
K = 169 ,receptor distance = 250 ft

EPAPA010000358

CES ENVIRONMENTAL SERVICES, INC. - PORT ARTHUR
TANK EMISSION CALCULATIONS

	Tank ID:	T1	T1	T2	T3	T4	T5	T6	T7	T8	T9
	chemical	SIB Oil	Sulfidic causti	30%	10%					Salts	Oil
	Material:	Mix Tank	Mix Tank	Hydroxide Peroxide	Hydroxide Peroxide	Sulfuric Acid	Sodium Hydroxide	Sodium Hydrosulfide	Sodium Hydrosulfide	Wastewater	Separator
Annual Throughput, gal/yr	Q =	13,000,000	13,000,000	1,560,000	7,800,000	1,040,000	1,040,000	2,340,000	2,340,000	5,200,000	364,000
Max Hourly Transfer Rate, gal/hr	FR =	4,000	4,000	6,000	500	60	60	60	60	4,000	60
Emissions:											
Maximum Hourly Emissions, lb/hr	**Lmax =**	**0.02480**	**0.02308**	**0.00000**	**0.00318**	**0.00000**	**0.01295**	**0.00011**	**0.00011**	**1.08849**	**0.00023**
Total Annual Emissions, TPY	**Lt =**	**1.07806**	**1.00331**	**0.15808**	**0.68148**	**0.00001**	**0.06187**	**0.05600**	**0.05600**	**0.40844**	**0.03510**
Annual Average Hourly Emis, lb/hr	Lavg =	0.246	0.229	0.036	0.156	0.000	0.01412	0.013	0.013	0.093	0.008
Standing loss, lb/yr	Ls =	7.334	6.576	17.972	1.068	0.001	3.134	2.167	2.167	62.313	0.000
Working loss, lb/yr	Lw =	2148.790	2000.053	298.195	1361.893	0.011	120.597	109.824	109.824	754.559	70.198
Material Properties:											
Molecular Weight, lb/lb-mole	Mv =	18.00	18.00	20.80	18.83	98.07	15.26	18.00	18.00	18.00	150.00
Vapor Pressure @ Tla, psia	Pva =	0.39	0.36	0.39	0.39	0.00	0.32	0.11	0.11	0.34	0.05
Vapor Pressure @ Tln, psia	Pvn =	0.33	0.30	0.32	0.33	0.00	0.27	0.09	0.09	0.29	0.04
Vapor Pressure @ Tlx, psia	Pvx =	0.46	0.42	0.46	0.46	0.00	0.38	0.13	0.13	0.40	0.07
Max. Vapor Pressure @ mTlx, psia	Pvmax =	0.72	0.67	0.65	0.71	0.00	0.59	0.21	0.21	0.63	0.11
Tank Properties:											
Vapor control device		scrubber	scrubber	vapor balance	scrubber	none	none	scrubber	scrubber	none	flare
Vapor control efficiency, %	e =	98	98	100	98	0	0	98	98	0	99
Capacity volume, gal	Cv =	47,966	47,966	8,812	547	13,535	15,039	6,016	6,016	41,123	14,099
Shell Diameter, ft	D =	10.8	10.8	10.0	4.5	8.0	8.0	8.0	8.0	10.0	10.0
Shell Height/Length, ft	Hs =	70.0	70.0	15.0	4.6	36.0	40.0	16.0	16.0	70.0	24.0
Tank Orientation (vertical or horizontal)		vert	vert	horiz	horiz	horiz	horiz	vert	vert	horiz	vert
Roof type (cone or dome)		cone	cone	N/A	N/A	N/A	N/A	cone	cone	N/A	cone
Tank Color (white, light gray, other)		white	white	white	white	white	white	white	white	white	white
Solor absorbance factor	a =	0.17	0.17	0.17	0.17	0.17	0.17	0.17	0.17	0.17	0.17
Pressure vent setting, psig	Pbp =	0.3	0.3	0	0	0	0.3	0	0	0	0
Vacuum vent setting, psia	Pbv =	-0.3	-0.3	0	0	0	-0.3	0	0	0	0
Effective diameter, ft	De =	10.8	10.8	13.8	5.1	19.2	20.2	8.0	8.0	29.9	10.0
Avg. Liquid Height, ft	Hl =	35.0	35.0	5.0	2.3	4.0	4.0	8.0	8.0	5.0	12.0
Max. Liquid Height, ft	Hlx =	70.0	70.0	10.0	4.5	8.0	8.0	16.0	16.0	10.0	24.0
Roof Outage, ft	Hro =	0.00	0.00	0.00	0.00	0.00	0.00	0.08	0.08	0.00	0.10
Vapor Space Outage, ft	Hvo =	35.00	35.00	5.00	2.25	4.00	4.00	8.08	8.08	5.00	12.10
Vapor space volume, ft^3	Vv =	3206.31	3206.31	750.38	46.60	1152.58	1280.65	406.31	406.31	3501.78	950.66

EPAPA010000359

Operating Conditions (Houston, Tx):											
Atmospheric pressure, psia	Pa =	14.7	14.7	14.7	14.7	14.7	14.7	14.7	14.7	14.7	14.7
Annual Avg. Daily solar insulation factor, Btu/ft^2 day	I =	1351	1351	1351	1351	1351	1351	1351	1351	1351	1351
Annual Avg. Daily max. ambient temp, R	Tax =	539.1	539.1	539.1	539.1	539.1	539.1	539.1	539.1	539.1	539.1
Annual Avg. Daily min. ambient temp, R	Tan =	517.4	517.4	517.4	517.4	517.4	517.4	517.4	517.4	517.4	517.4
Annual Avg. Daily vapor temp. range, R	^Tv =	22.1	22.1	22.1	22.1	22.1	22.1	22.1	22.1	22.1	22.1
Annual Daily avg. liquid surface temp, R	Tla =	530.1	530.1	530.1	530.1	530.1	520.0	530.1	530.1	530.1	530.1
Annual Avg. Daily min. liquid surface temp., R	Tln =	524.6	524.6	524.6	524.6	524.6	515.0	524.6	524.6	524.6	524.6
Annual Avg. Daily max. liquid surface temp., R	Tlx =	535.6	535.6	535.6	535.6	535.6	525.0	535.6	535.6	535.6	535.6
Highest Month Daily solar insulation factor, Btu/ft^2 da)	mI =	1898	1898	1898	1898	1898	1898	1898	1898	1898	1898
Highest Month Daily max. ambient temp, R	mTax =	553.6	553.6	553.6	553.6	553.6	553.6	553.6	553.6	553.6	553.6
Highest Month Daily min. ambient temp, R	mTan =	532.5	532.5	532.5	532.5	532.5	532.5	532.5	532.5	532.5	532.5
Highest Month Daily vapor temp. range, R	m^Tv =	24.2	24.2	24.2	24.2	24.2	24.2	24.2	24.2	24.2	24.2
Highest Month Daily max. liquid surface temp., R	mTlx =	551.7	551.7	551.7	551.7	551.7	525.0	551.7	551.7	551.7	551.7
Gas Constant, psia-ft^3/lb mole-R	R =	10.73	10.73	10.73	10.73	10.73	10.73	10.73	10.73	10.73	10.73
Vapor Density, lb/ft^3	Wv =	0.001	0.001	0.001	0.001	0.000	0.001	0.000	0.000	0.001	0.001
Daily vapor pressure range, psia	^Pv =	0.131	0.121	0.138	0.134	0.000	0.108	0.037	0.037	0.115	0.020
Vapor space expansion factor	Ke =	0.009	0.008	0.051	0.051	0.042	0.008	0.044	0.044	0.050	0.043
Vented vapor saturation factor	Ks =	0.583	0.600	0.907	0.956	1.000	0.937	0.955	0.955	0.918	0.967
Working Loss Product Factor	Kp =	1.00	1.00	1.00	1.00	1.00	1.00	1.00	1.00	1.00	1.00
Turnovers	N =	271.02	271.02	177.03	14253.46	76.84	69.15	388.98	388.98	126.45	25.82
Turnover factor	Kn =	1.00	1.00	1.00	1.00	1.00	1.00	1.00	1.00	1.00	1.00
Operating Days, days/yr	Days =	365	365	365	365	365	365	365	365	365	365

EPAPA010000360

CES ENVIRONMENTAL SERVICES, INC. - PORT ARTHUR
FUGITIVE EMISSION ESTIMATES

MATERIAL	FIN	VP (psia)	Liquid wt frac.	Stream Type LL,HL,G/V	Valves	lbs/hr	Flanges	lbs/hr	Gas/Vapor Valves	lbs/hr	Pumps	lbs/hr	Relief Valves	lbs/hr	Total lb/hr	EMISSIONS (lb/hr)	(ton/yr)
SIB oil	T1	0.20537	1.0000	LL	20	0.0021	40	0.0006	0	0	1	0.002702	0	0	0.0054	0.0054	0.0237
Hydrogen peroxide 30%	T2	0.65214	0.3000	LL	8	0.00084	16	0.00024	0	0	1	0.002702	1	0.006879	0.0032	0.0010	0.0042
Hydrogen peroxide 10%	T3	0.70865	0.1000	LL	3	0.000315	8	0.00012	0	0	1	0.002702	1	0.006879	0.0010	0.0001	0.0004
Hydrogen sulfide	process gas		1.0000	G/V	0	0	0	0	20	0.00534	0	0	0	0	0.0053	0.0053	0.0234
																0.0118	0.0517

Speciation	Total lb/hr	Total TPY
SIB oil	0.0054	0.0237
Hydrogen peroxide	0.0011	0.0046
Hydrogen sulfide	0.0053	0.0234
Total	0.0065	0.0283

Monitoring is performed in accordance with TCEQ AVO.

SOCMI Factors	Valves	Flanges	G/V Vlv	G/V Flng	Pumps	Relief Vlv	Agitator
Light Liquid (LL)	0.0035	0.0005	--	--	0.0386	--	0.0005
Gas / Vapor (G/V)	--	--	0.0089	0.0029	--	0.2293	--
Heavy Liquid (HL)	0.0007	0.00007	--	--	0.0161	--	0.00007
LL,G/V - Efficiency (%)	97	97	97	97	93	97	97
HL - Efficiency (%)	0	0	30	30	0	0	0

* Per TCEQ guidance, fugitive emissions are not estimated for materials with vapor pressure < 0.002 psia.

EPAPA010000361

CES ENVIRONMENTAL SERVICES, INC. - PORT ARTHUR
Flare Combustion Calculation

Flare design data 224.7 scf /min
Vent gas composition 24 ppm sulfur compounds to flare

Calculation Basis: IDEAL GAS LAW, PV = nRT

where:
P = pressure (psia)
V = volumetric flow rate (scf /min)
R = Universal Gas Constant
T= Temperature
n = no. of moles of gas

data
14.7 psia
224.7 scf /min
10.73 psia scf / lb mole R
530.1 R

Vent gas sulfur compound portion is 24 ppm

then, $n = PV/RT * 60 * 24 / 10^6$

0.00084 lb mole sulfur / hr

Flare combustion will convert the sulfur compounds in the vent stream to SO2.
To convert to SO2, 1 lb mole SO2 is 64 lb

0.0535 lb/hr SO2
0.23 TPY SO2

COMBUSTION

	vent gas	pilot gas	supplemental gas
heat	0	2315.9	2315.9 Btu/scf
flow	13482	20	2360 scfh
rate	118,102,320	175,200	20,673,600 scf/year

	Factor lb/MMBtu	NOx TPY	NOx lb/hr	Factor lb/MMBtu	CO TPY	CO lb/hr
Vent Gas	0.1380	0.000	0.000	0.2755	0.000	0.000
Pilot Gas	0.1380	0.028	0.006	0.2755	0.056	0.013
Supplemental Gas	0.1380	3.304	0.754	0.2755	6.595	0.013
Total	N/A	3.332	0.761	N/A	6.651	0.026

Flare Destruction/Removal Efficiency and Emission Factors are based on TCEQ Technical Guidance for Chemical Sources: Flares and Vapor Oxidizers: RG-109 October 2000 for high Btu non-steam assisted flares.

Pilot Gas Sample calculation:
NOx ton/yr: (2,316 Btu/lb) * (175,200 lb/MMBtu) / 1000000 * (0.1380 lb/yr) / 2000 = 0.028 tpy
NOx lb/hr: (2,316 Btu/lb) * (20 lb/MMBtu) / 1000000 * (0.1380 lb/yr) = 0.006 lb/hr

[3] TCEQ Technical Flare Guidance states in Table 4 Flare Factors - PM emission factor is none.

EPAPA010000362

TCEQ FORMS AND TABLES

Texas Commission on Environmental Quality
Form PI-7-CERT
Certification and Registration for Permits by Rule

I. REGISTRANT INFORMATION			
A. TCEQ Customer Reference Number:	CN-600618946	TCEQ Regulated Entity Number:	
Note: If "NO," CN or RN number was entered above; please fill out the required Core Data Form, which will be available in Step II of the submittal process.			
B. Company or Other Legal Customer Name: CES Environmental Services Inc.			
Company Official Contact Name: Matt Bowman		Title: President	
Mailing Address: 4904 Griggs Road			
City: Houston		State: TX	Zip Code: 77021
Phone No.: (713) 676-1460	Fax No.: (713) 676-1676	E-mail Address: mbowman@cesenvironmental.com	
C. Technical Contact Name: Philip Evans			
Company: The WCM Group, Inc.			
Mailing Address: 110 Bender Ave			
City: Humble		State: TX	Zip Code: 77336
Phone No. : (281) 446-7070	Fax No.: (281) 446-3348	E-mail Address: pevans@wcmgroup.com	
D. Facility Location Information - Street Address: 2420 S. Gulfway Drive			
If "NO," street address, provide written driving directions to the site: (attach description if additional space is needed)			
City: Port Arthur	County: Jefferson	Zip Code: 77641	

II. FACILITY AND SITE INFORMATION			
A. Name and Type of Facility: CES Environmental Services Inc.			X Permanent ☐ Portable
B. PBR claimed under **30 TAC § 106** *(List all)*:			
§ 106.261	§ 106.475		
§ 106.262	§ 106.492		
§ 106.472	§ 106.		
Are you claiming a **historical standard exemption or PBR**?			☐ YES X NO
If "YES," enter effective date and Rule Number:			
C. Are you registering a **grandfathered** facility? *If "YES," attach documentation of construction date:*			☐ YES X NO
D. Is there a previous Standard Exemption or PBR for the facility in this registration? (Attach details regarding changes)			☐ YES X NO
If "YES," enter Registration Number and Rule Number:		261/262	
E. Are there any **other facilities** at this **site** which are **authorized by an Air Standard Exemption or PBR**?			☐ YES X NO
If "YES," enter Registration Number and Rule Number:			
F. Are there any **other air preconstruction permits** at this site?			☐ YES X NO
If "YES," enter Permit Numbers:			
G. Is this site required to obtain an **air federal operating permit**?			☐ YES X NO
If "YES," enter Permit Number:			
H. TCEQ Account Identification Number *(if known)*:			

Texas Commission on Environmental Quality
Form PI-7-CERT
Certification and Registration for Permits by Rule

III. FEE INFORMATION			
To determine if a fee is required answer the following question. If "YES," to question III. A., a fee is not required, skip to Section IV. If "NO," to answer II. A., then go to Section III. B. See Section VI. for address to send fee or go to www.2.tceq.state.tx.us/epay to pay online.			
A. Is this registration an update to a previously registered facility and accompanied by a Certification Form solely to establish a federally enforceable emission limit?			☐ YES X NO
B. What is the fee amount? *If "YES," to any of the following three questions, a **$100** fee is require. Otherwise, a **$450** fee is required.*			
Does this business have less than 100 employees?			☐ YES X NO
Does this business have less than 1 million dollars in annual gross receipts?			☐ YES X NO
Is this registration submitted by a governmental entity with a population of less than 10,000?			☐ YES X NO
C. Check/Money Order or Transaction Number *(Payable to TCEQ)*:		*Was fee **Paid** online?*	☐ YES X NO
Company name of check: The WCM Group, Inc.		Fee amount:	$450

IV. SELECTED FACILITY REVIEWS ONLY—TECHNICAL INFORMATION		
Note: If claiming one of the following PBRs, complete this section, then skip to Section VI., "Submitting your registration" below:		
Animal Feeding Operations § 106.161 ***Livestock Auction Facilities § 106.162*** ***Saw Mills § 106.223***		
Grain Handling, Storage and Drying § 106.283 ***Auto Body Refinishing Facilities § 106.436*** ***Air Curtain Incinerator § 106.496***		
A. Is the applicable PBR checklist attached which shows the facility meets all general and specific requirements of the PBR(s) being claimed? *(If submitting electronically, click "YES".)*		☐ YES ☐ NO
B. Distance from this facility's emission release point to the nearest property line:		feet
Distance from this facility's emission release point to the nearest off-property structure:		feet

V. TECHNICAL INFORMATION INCLUDING STATE AND FEDERAL REGULATORY REQUIREMENTS ***Registrants must be in compliance with all applicable state and federal regulations and standards to claim a PBR.***	
A. Is Confidential information submitted and properly marked "CONFIDENTIAL" with this registration?	☐ YES X NO
B. Is a process flow diagram or a process description attached?	X YES ☐ NO
C. Are emissions data and calculations for this claim attached?	X YES ☐ NO
D. Is information attached showing how the **general** requirements (**30 TAC § 106.4**) of the PBR is met for this Registration? (**PBR checklists** may be used, but are optional)	X YES ☐ NO
*Note: Please be reminded that if the facilities listed in this registration are subject to the Mass Emissions Cap & Trade program under **30 TAC Chapter 101, Subchapter H, Division 3**, the owner/operator of these facilities must possess NO_x allowances equivalent to the actual NO_x emissions from these facilities.*	
E. Is information attached showing how the **specific PBR** requirements are met for this registration? (***PBR checklist** may be used, but are optional*)	X YES ☐ NO
F. Distance from this facility's emission release point to the nearest property line:	200 feet
Distance from this facility's emission release point to the nearest off-property structure:	250 feet
Note: In limited cases, a map or drawing of the site and surrounding land use may be requested during the technical review or at the request of the TCEQ Regional Office or local air pollution control program during an investigation.	

Texas Commission on Environmental Quality
Form PI-7-CERT
Certification and Registration for Permits by Rule

VI. SIGNATURE FOR CERTIFICATION AND REGISTRATION

The signature below indicates that the Responsible Official has knowledge of the facts herein set forth and that the same are true, accurate, and complete to the best of my knowledge and belief. By this signature, the maximum emission rates listed on this certification reflect the maximum anticipated emissions due to the operation of this facility and all representations in this certification of emissions are conditions upon which the facilities and sources will operate. It is understood that it is unlawful to vary from these representations unless the certification is first revised. The signature certifies that to the best of the Responsible Official's knowledge and belief, the project will satisfy the conditions and limitations of the indicated exemption or permit by rule and the facility will operated in compliance with all regulations of the Texas Commission on Environmental Quality and with Federal U.S. Environmental Protection Agency regulations governing air pollution. The signature below certifies that, based on information and belief formed after reasonable inquiry, the statements and information above and contained in the attached document(s) are true, accurate, and complete. **If you questions on how to fill out this form or about air quality permits. Please call 512/239-1250.** *Individuals are entitled to request and review their personal information that the agency gathers on its forms. They may also have any errors in their information corrected. To review such information, call 512/239-3282.*

SIGNATURE:	DATE: 9/10/08

VII. SUBMITTING COPIES OF THE CERTIFICATION AND REGISTRATION

Copies must be sent as listed below:
Processing delays may occur if copies are not sent as noted.

Who	*Where*	*What*
Air Permits Initial Review Team (APIRT)	Regular, Certified, Priority Mail MC161, P.O. Box 13087 Austin, Texas 78711-3087 Hand Delivery, Overnight Mail MC 161, 12100 Park 35 Circle, Building C, Third Floor Austin, Texas 78753 Fax No.: (512) 239-2123 *(do not follow fax with paper copies)*	Originals Form PI-7, Core Data Form, and all attachments
Revenue Section, TCEQ	Regular, Certified, Priority Mail MC 214, P.O. Box 13088 Austin, Texas 78711-3088 Hand Delivery, Overnight Mail MC 214, 12100 Park 35 Circle, Building A, Third Floor Austin, Texas 78753	Original Money Order or Check Copy of Form PI-7 and Core Data Form
Appropriate TCEQ Regional Office	To find your Regional Office address, go to the TCEQ Web site at www.tceq.state.tx.us, or call (512) 239-1250.	Copy of Form PI-7, Core Data Form, and all attachments.
Appropriate Local Air Pollution Control Program(s)	To Find your local or Regional Air Pollution Control Programs go to the TCEQ, APD Website at www.tceq.state.tx.us/nav/permits/air_permits.html or call (512) 239-1250	Copy of Form PI-7, Core Data Form, and all attachments.

TEXAS COMMISSION ON ENVIRONMENTAL QUALITY
AIR PERMITS DIVISION

TITLE 30 TAC § 106.4 "QUICK-CHECK" APPLICABILITY CHECKLIST

Company Name: CES Environmental Services, Inc.
Checklist completed by: The WCM Group, Inc. Date: September 2008
Facility Type: Chemical production
Permit(s) by rule claimed: 30 TAC Chapter §106: 261, 262, 472, 475, 492
Project Description (including equipment, materials, and brief process description):

This project installs a four storage tanks, a mix vessel with an overflow vessel and a product hold tank. The production operation also includes an oil/water separator, scrubber and flare. Aqueous feed stream is treated with hydrogen peroxide and then reacted with sulfuric acid to generate reaction gases that are bubbled through a caustic solution to produce sodium hydrosulfide. The process vents to a scrubber and then to a flare for odor abatement.

CO	6.65	NO_X	3.33	VOC	1.14
PM	0.00	SO_2	0.00	Other	0.00

The following questions require a "Yes" or "No" answer to be indicated for this permit by rule claim:

A. Title 30 TAC § 106.4(a)(5): Current Permit by Rule Requirements

Yes X No☐ Have you checked to determine if this exempt project is being claimed under the current version of 30 TAC 106?
If "Yes ", continue to next question If "No ", please contact the Air Permits Division for a copy of the current permit by rule to be claimed.

B. Title 30 TAC § 106.4(a)(7): Permit by rule prohibition check

Yes☐ No X Are there any air permits under the same account containing permit conditions which prohibit or restrict the use of permits by rule?
If "No ", continue to next question
If "Yes ", permits by rule may not be used or their use must meet the restrictions of the permit.
A new permit or permit amendment may be required.
List permit number(s):

C. Title 30 TAC § 106.4(b): Circumvention check

Title 30TAC§ 106.4(b) states "No person shall circumvent by artificial limitations the requirements of§l 16.110 of this title (covering permitting)." Circumvention by artificial limitations may include but is not limited to:
A. dividing a complete project into separate segments to circumvent §106.4(a)(l) limits;
B. claiming feed or production rates below the physical capacity of the project's equipment in order to begin constructing facilities before a permit or permit amendment is approved for full scale operations, particularly when the unit will not be economically viable at less than permitted capacity;
C. claiming a limited chemical list in order to begin constructing facilities before a permit or permit amendment is approved for additional chemicals, particularly when the unit will not be economically viable until the additional chemicals are authorized.

Yes☐ No X Does your project meet any of the criteria listed above?
If "No ", continue to next rule question If "Yes ", a permit y rule may not be claimed.

D. Title 30 TAC § 106.4(c) and (d): Compliance with all Rules

Yes X No☐ Will the facility comply with all rules and regulations of the TCEQ, the intent of the Texas Clean Air Act, and any local permitting or registration requirements? *If "Yes ", continue to next rule question If "No ", a permit by rule may not be claimed.*

E. Title 30 TAC § 106.4(a)(l): Emission limits check

Yes X No☐ The maximum emissions from all facilities at the site, including this permit by rule claim, are less than 25 tpy of any contaminant.
If the answer to this questions is "Yes ", no further review is needed to complete this checklist. Forward all information needed to verify your permit by rule claim to the . If "No ", this checklist cannot be used. Please complete the standard 30 TAC § 106.4 Applicability Checklist.

Title 30 Texas Administrative Code § 106.261
Permit By Rule (PBR) Checklist
Facilities (Emission Limitations)

Electronic Submittal - Only enter the PI-7 confirmation number here if submitting electronically.
Hard-Copy Submittal - Print and complete the following checklist.

The following checklist is designed to help you confirm that you meet Title 30 Texas Administrative Code § 106.261 (30 TAC § 106.261) requirements. If you do not meet all the requirements, you may alter the project design or operation in such a way that all the requirements of the PBR are met or you may obtain a construction permit. The PBR forms, tables, checklists and guidance documents are available from the Texas Commission on Environmental Quality (TCEQ), Air Permits Division Web site at, www.tceq.state.tx.us/nav/permits/air_permits.html.

CHECK THE MOST APPROPRIATE ANSWER	
Is a description or checklist of how this claim meets the general requirements for the use of PBRs in 30 TAC § 106.4 attached?	X YES ☐ NO ☐N/A
b1 Is this claim for construction of a facility authorized in another section of this chapter or for which a standard permit is in effect? *If "YES," this PBR cannot be used to authorize emissions from the project*	☐ YES X NO ☐N/A
b2 Is this claim for any change to any facility authorized under another section of this chapter or authorized under a standard permit? *If "YES," this PBR cannot be used to authorize emissions from the project*	☐ YES X NO ☐N/A
a1 Are facilities or changes located at least 100 feet from any recreational area or residence or other structure not occupied or used solely by the owner or operator of the facilities or the owner of the property upon which the facilities are located?	X YES ☐ NO ☐N/A
a2 Are total new or increased emissions, including fugitives, less than or equal to 6.0 pounds per hour (lb/hr) and ten tons per year of the following materials (check all that apply):	☐ YES ☐ NO X N/A

☐ acetylene	☐ helium	☐ propyl ether	☐ limestone
☐ argon	☐ isohexane	☐ sulfur dioxide	☐ magnesite
☐ butane	☐ isopropyl alcohol	☐ alumina	☐ marble
☐ crude oil	☐ methyl acetylene	☐ calcium carbonate	☐ pentaerythritol
☐ carbon monoxide	☐ methyl chloroform	☐ calcium silicate	☐ plaster of paris
☐ cyclohexane	☐ methyl cyclohexane	☐ cellulose fiber	☐ silicon
☐ cyclohexene	☐ neon	☐ cement dust	☐ silicon carbide
☐ cyclopentan	☐ nonan	☐ emery dust	☐ starch
☐ ethyl acetate	☐ oxides of nitrogen	☐ glycerin mist	☐ sucrose
☐ ethanol	☐ propane	☐ gypsum	☐ zinc stearate
☐ ethyl ether	☐ propyl alcohol	☐ iron oxide dust	☐ zinc oxide
☐ ethylene	☐ propylene	☐ kaolin	

☐ refinery petroleum fractions (except for pyrolysis naphthas and pyrolysis gasoline) containing less than ten volume percent benzene
☐ fluorocarbons Numbers 11, 12, 13, 14, 21, 22, 23, 113, 114, 115, and 116

a3 Are total new or increased emissions, including fugitives, less than or equal to 1.0 lb/hr of any chemical having a limit value (L) greater than 200 milligrams per cubic meter (mg/m^3) as listed and referenced in Table 262 of 30 TAC § 106.262 of this title (relating to Facilities (Emission and Distance Limitations)? List chemical:_____ L value:_____	☐ YES ☐ NO X N/A

Are total new or increased emissions, including fugitives, less than or equal to 1.0 lb/hr of any chemical not listed or referenced in Table 262? List chemical:___Sufonated Isobutylene	X YES ☐ NO ☐N/A
Are total new or increased emissions, including fugitives, of a chemical with a limit value of less than 200 mg/m^3? If "Yes", the authorization of the chemical is not allowed under this section. We suggest you use 30 TAC §106.262 to authorize the emissions, if applicable.	☐ YES ☐ NO X N/A
a4 Are there any changes to or additions of any existing air pollution abatement equipment?	☐ YES X NO ☐N/A
a5 Will there be any visible emissions, except uncombined water, emitted to the atmosphere from any point or fugitive source in amounts greater than 5.0% opacity in any six-minute period?	☐ YES X NO ☐N/A
a6 Are emission increases five tons per year or greater? If "YES," this checklist must be attached to a Form PI-7 within ten days following the installation or modification of the facilities. The notification shall include a description of the project, calculations, data identifying specific chemical names, limit values, and a description of pollution control equipment, if any.	☐ YES X NO ☐N/A
a7 Are emission increases less than five tons per year? If "YES," this checklist must be attached to a Form PI-7 and include a description of the project, calculations, data identifying specific chemical names, limit values, and a description of pollution control equipment, if any. (pick one): X Within ten days following the installation or modification of the facilities. The notification shall include a description of the project, calculations, data identifying specific chemical names, limit values, and a description of pollution control equipment, if any; or ☐ By March 31 of the following year summarizing all uses of this permit by rule in the previous calendar year.	X YES ☐ NO ☐N/A

Title 30 Texas Administrative Code § 106.262
Permit by Rule (PBR) Checklist
Facilities (Emission and Distance Limitations)

Electronic Submittal - Only enter the PI-7 confirmation number here if submitting electronically.
Hard-Copy Submittal - Print and complete the following checklist.
The following checklist is designed to help you confirm that you meet Title 30 Texas Administrative Code § 106.262 (30 TAC § 106.262) requirements. If you do not meet all the requirements, you may alter the project design or operation in such a way that all the requirements of the PBR are met or you may obtain a construction permit. The PBR forms, tables, checklists and guidance documents are available from the Texas Commission on Environmental Quality (TCEQ), Air Permits Division Web site at, www.tceq.state.tx.us/nav/permits/air_permits.html.

CHECK THE MOST APPROPRIATE ANSWER				
	Is a description or checklist of how this claim meets the general requirements for the use of PBRs in 30 TAC § 106.4 attached?	X YES	❑ NO	❑ N/A
b1.	Is this claim for construction of a facility authorized in another section of this chapter or for which a standard permit is in effect? *If "YES," this PBR cannot be used to authorize emissions from the project.*	❑ YES	X NO	❑ N/A
b2.	Is this claim for any change to any facility authorized under another section of this chapter or authorized under a standard perm? *If "YES," this PBR cannot be used to authorize emissions from the project.*	❑ YES	X NO	❑ N/A
c.	Is the facility authorized under another section of this chapter or under a standard permit? *If "YES," subsection (a)(2) and (3) of this section may be used to qualify the use of other chemicals at the facility.*	X YES	❑ NO	❑ N/A
a1.	Are facilities or changes located at least 100 feet from any recreational area or residence or other structure not occupied or used solely by the owner or operator of the facilities or the owner of the property upon which the facilities are located?	X YES	❑ NO	❑ N/A
a2.	Are new or increased emissions, including fugitives, emitted in a quantity less than five tons per year or in a quantity less than E as determined by using the equation E=L/K? See Table 262 Figures 1 and 2. *If "YES," the notification shall include a description of the project, calculations for all emissions being claimed under this PBR:*	X YES	❑ NO	❑ N/A
	Chemical:__hydrogen peroxide__ L value:____1.4 _____ D:_____250 _____ K:____169_____ Chemical:__hydrogen sulfide __ L value:____1.1 _____ D:_____250 _____ K:____169_____			
a3.	Is this checklist attached to a Form PI-7 within ten days following the installation or modification of the facilities? *If "YES," the notification shall include a description of the project, calculations, and data identifying specific chemical names, L values, and a description of pollution control equipment, if any..*	X YES	❑ NO	❑ N/A
a4.	Are one or more of the following chemicals is handled for this registration? (Check all that apply) *If "YES," answer the following four questions.*	❑ YES	❑ NO	X N/A

❑ acrolein	❑ diazomethane	❑ hydrogen sulfide	❑ ozone
❑ allyl chloride	❑ diborane	❑ ketene	❑ pentaborne
❑ ammonia (anhydrous)	❑ diglycidyl ether	❑ methylamine	❑ perchloromethyl mercaptan
❑ arsine	❑ dimethylhydrazine	❑ methyl bromide	❑ perchloryl fluoride
❑ boron trifluoride	❑ ethyleneimine	❑ methyl hydrazine	❑ phosgene
❑ bromine	❑ ethyl mercaptan	❑ methyl isocyanate	❑ phosphine
❑ carbon disulfide	❑ fluorine	❑ methyl mercaptan	❑ phosphorus trichloride
❑ chlorine	❑ formaldehyde (anhydrous)	❑ nickel carbonyl	❑ selenium
❑ chlorine dioxide	❑ hydrogen bromide	❑ nitric acid	❑ hexafluoride stibine
❑ chlorine trifluoride	❑ hydrogen chloride	❑ nitric oxide	❑ liquefied sulfur dioxide
❑ chloroacetaldehyde	❑ hydrogen cyanide	❑ nitrogen dioxide	❑ sulfur pentafluorid
❑ chloropicrin	❑ hydrogen fluoride	❑ oxygen difluoride	❑ tellurium hexafluoride
❑ chloroprene	❑ hydrogen selenide		

Title 30 Texas Administrative Code § 106.262
Permit by Rule (PBR) Checklist
Facilities (Emission and Distance Limitations)

	Are all facilities are located at least 300 feet from the nearest property line and 600 feet from any off-plant receptor?	❑ YES	❑ NO	X N/A
	Are the cumulative amount of any of the following chemicals resulting from one or more authorizations under this section (but not including permit authorizations) less than or equal to 500 pounds on the plant property?	❑ YES	❑ NO	X N/A
	Are all listed chemicals handled only in unheated containers operated in compliance with the United States Department of Transportation regulation (49 Code of Federal Regulation, Parts 171-178)?	❑ YES	❑ NO	X N/A
	Are any changes to or additions of any existing air pollution abatement equipment?	❑ YES	❑ NO	X N/A
a5.	Are there any changes to or additions of any existing air pollution abatement equipment?	❑ YES	❑ NO	X N/A
a6.	Will there be any visible emissions, except uncombined water, emitted to the atmosphere from any point or fugitive source in amounts greater that 5.0% opacity in any six-minute period?	❑ YES	❑ NO	X N/A

D, Feet	K
100	326
200	200
300	139
400	104
600	65
700	54
800	46
900	39
1,000	34
2,000	14
3,000 or more	8

E=maximum allowable hourly emission, and never to exceed 6 pounds per hour.

K=value from the table on this page. (interpolate intermediate values)

D=distance to the nearest off-plant receptor

TABLE 262
LIMIT VALUES (L) FOR USE WITH EXEMPTIONS FROM PERMITTING § 106.262

The values are not to be interpreted as acceptable health effects values relative to the issuance of any permits under Chapter 116 of this title (relating to Control of Air Pollution by Permits for new Construction or Modification).

Compound	Limit (L) Milligrams Per Cubic Meter
Acetone	590.
Acetaldehyde	9.
Acetone	4.
Acetonitrile	34.
Acetylene	2662.
N-Amyl Acetate	2.7
Sec-Amyl Acetate	1.1
Benzene	3.
Beryllium and Compounds	0.0005
Boron Trifluride, as HF	0.5
Butyl Alcohol,	76.
Butyl Acrylate	19.
Butyl Chromate	0.01
Butyl Glycidyl Ether	30.
Butyl Mercaptain	0.3
Butyraldehyde	1.4
Butyric Acid	1.8
Butyronitrile	22.
Carbon Tetrachloride	12.
Chloroform	10.
Chlorophenol	0.2
Chloroprene	3.6
Chromic Acid	0.01
Chromium Metal, Chromium II and III Compounds	0.1
Chromium VI Compounds	0.01
Coal Tar Pitch Volatiles	0.1
Creosote	0.1
Cresol	0.5
Cumene	50.
Dicyclopentadiene	3.1
Diethylaminoethanol	5.5
Diisobutyl Ketone	63.9
Dimethyl Aniline	6.4
Dioxane	3.6

Compound	Limit (L) Milligrams Per Cubic Meter
Dipropylamine	8.4
Ethyl Acrylate	0.5
Ethylene Dibromide	0.38
Ethylene Glycol	26.
Ethylene Glycol Dinitrate	0.1
Ethylidene 2-norbornene, 5-	7.
Ethyl Mercaptan	0.08
Ethyl Sulfide	1.6
Glycolonitrile	5.
Halothane	16.
Heptane	350.
Hexanediamine, 1, 6-	0.32
Hydrogen Chloride	1.
Hydrogen Fluoride	0.5
Hydrogen Sulfide	1.1
Isoamyl Acetate	133.
Isoamyl Alcohol	15.
Isobutyronitrile	22.
Kepone	0.001
Kerosene	100.
Malononitrile	8.
Mesityl Oxide	40.
Methyl Acrylate	5.8
Methyl Amyl Ketone	9.4
Methyl-T-Butyl Ether	45.
Methyl Butyl Ketone	4.
Methyl Disulfide	2.2
Methylenebis (2-chloroaniline) (MOCA)	0.003
Methylene Chloride	26.
Methyl Isoamyl Ketone	5.6
Methyl Mercaptan	0.2
Merthyl Methacrylate	34.
Methyl Propyl Ketone	530.
Methyl Sulfide	0.3
Mineral Spirits	350.
Naphtha	350.
Nickel, Inorganic Compounds	0.015
Nitroglycerine	0.1

Compound	Limit (L) Milligrams Per Cubic Meter
Nitropropane	5.
Octane	350.
Parathion	0.05
Pentane	350.
Perchloroethylene	33.5
Petroleum Ether	350.
Phenyl Mercaptan	0.4
Propionitrile	14.
Propyl Acetate	62.6
Propylene Oxide	20.
Propyl Mercaptan	0.23
Silica-amorphous-precipitated, silica gel	4.
Silicon Carbide	4.
Stoddard Solvent	350.
Styrene	21.
Succiononitrile	20.
Tolidin	0.02
Trichloroethylene	135.
Trinethylamine	0.1
Valeric Acid	0.34
Vinyl Acetate	15.
Vinyl Chloride	2.

NOTE: The time weighted average (TWA) threshold Limit Value (TLV) published by the American Conference of Governmental Industrial Hygienists (AGGIH), in its TLVs and BEIs guide (1997 Edition) shall be used for compounds not included in the table. The Short Term Exposure Level (STEL) or Ceiling Limit (annotated with a "C") published by the ACGIH shall be used for compounds that do not have a published TWA TLV. This section cannot be used if the compound is not listed in the table or does not have a published TWA TLV, STEL, or Ceiling Limit in the ACGIH TLVs and BEIs guide.

Texas Commission on Environmental Quality

Exemption §106.472 Checklist
(Previously Standard Exemption 51)

Organic Liquid Loading and Unloading

The following checklist is designed to help you confirm that you meet §106.472, previously Standard Exemption 51 (STDX 51), requirements. **Any "no" answers indicate that the claim of registration may not meet all requirements for the use of Exemption §106.472, previously Standard Exemption 51.** If you do not meet all the requirements, you may alter the project design/operation in such a way that all the requirements of the exemption are met, or obtain a construction permit.

YES	NO	NA	DESCRIPTION
X	_	_	Have you included a description of how this exemption claim meets the general rule for the use of exemptions (§106, Subchapter A checklist is available)?
X	_	_	Are all the facilities claimed for exemption specifically named in the general section of §106.472, previously STDX 51? (This exemption has been interpreted to allow mixing or blending but not chemical reaction in tankage.)
X	_	_	Is the equipment designed to prevent visible emissions?
X	_	_	Are all the chemicals to be loaded, unloaded, or stored described in §106.472, previously STDX 51(a) - (i)? Attach a list of the chemicals and identify the appropriate item of §106.472, previously STDX 51 that applies. Include additional supporting data. For example, a §106.472, previously STDX 51(i), claim should identify initial boiling points of all compounds to be covered.
_	_	X	Will aqueous ammonia solutions, hydrochloric acid, or acetic acid be vented through a water scrubber?
_	_	X	Are facilities loading, unloading, or storing butyric acid, isobutyric acid, methacrylic acid, mercaptans, croton oil, 2-methyl styrene, or any other compound with an initial boiling point of 300 degrees F or greater listed in 40 CFR 261, Appendix VIII, located at least 500 feet from any recreational area or residence or other structure not occupied or used solely by the owner or operator of the facility or the owner of the property upon which the facility is located? List these compounds and show their handling location on an attached scaled plot plan.

Exemption §106.492 Checklist
(Previously Standard Exemption 80)

Smokeless Gas Flares

YOU MUST SUBMIT A PI-7 WITH REQUIRED ATTACHMENTS BEFORE CONSTRUCTION OR OPERATION IF THE GAS BURNED IN THE FLARE HAS A SULFUR OR CHLORINE CONCENTRATION GREATER THAN 24 PPMV.

The following checklist is designed to help you confirm that you meet Exemption §106.492, previously standard exemption 80, requirements. **Any "no" answers indicate that the claim of exemption may not meet all requirements for the use of Exemption §106.492, previously standard exemption 80.** If you do not meet all the requirements, you may alter the project design/operation in such a way that all the requirements of the exemption are met, or obtain a construction permit.

YES	NO	NA	DESCRIPTION
X	_	_	Have you included a description of how this exemption claim meets the general rule for the use of exemptions (§106.4 checklist is available)?
X	_	_	Is the flare equipped with a tip designed to provide good mixing with air, flame stability and a tip velocity less than 60 ft/sec for gases having a lower heating value less than 1,000 BTU/ft^3, or less than 400 ft/sec for gases with a LHV greater than 1,000 BTU/ft^3? Attach a description including BTU content and tip velocity (Table 8 is available).
_	_	_	Is the flare equipped with a continuously burning pilot or other automatic ignition system that assures gas ignition whenever vents are directed to the flare? Attach a description of the system.
_	_	X	If the flare emits more than 4 #/hr of reduced sulfur compounds, excluding sulfur oxides, is it equipped with an alarm system that immediately notifies appropriate personnel when the ignition system ceases functioning? Attach a description of the system.
_	_	X	If the flare emits less than 4 #/hr of reduced sulfur compounds and is not equipped with an alarm system, does the stack height meet the requirements of condition (d) of §106.352, previously standard exemption STDX 66? Required height:___. Actual height ___.
_	_	X_	If the flare burns gases containing more than 24 ppmv of sulfur, chlorine or compounds containing either element, is it located at least 1/4 mile from any recreational area, residence, or other structure not occupied or used solely by the owner or operator of the flare or owner of the property where the flare is located? Attach a scaled map.
_	_	X	If the flare emits HCl, does the heat release (BTU/hr based on lower heating value) equal or exceed 2.73 x 10E5 x HCl emission rate(lb/hr)? Attach calculations.
_	_	X	If the flare emits SO2, does the heat release (BTU/hr based on lower heating value) equal or exceed 0.53 x 10E5 x SO2 emission rate (lb/hr)? Attach calculations.
X	_	_	Will you limit the flare to burning only combustible mixtures of gases containing only carbon, hydrogen, nitrogen, oxygen, sulfur, chlorine, or compounds derived from these elements?
X	_	_	Will the gas mixture always have a net or lower heating value of at least 200 BTU/ft3 prior to addition of air?
X	_	_	Do you understand and will you ensure that liquids shall never be burned in the flare?

TABLE 8

FLARE SYSTEMS

Number from Flow Diagram N/A	Manufacturer & Model No. (if available) Tornado Air Assist Flare

CHARACTERISTICS OF INPUT

Waste Gas Stream	Material	Min. Value Expected	Ave. Value Expected	Design Max.
		(scfm [68°F,14.7 psia])	(scfm [68°F, 14.7 psia])	(scfm [68°F, 14.7 psia])
	1. air with sulfur compounds	200	200	264
	2.			
	3.			
	4.			
	5.			
	6.			
	7.			
	8.			
% of time this condition occurs				

	Flow Rate (scfm [68°F, 14.7 psia])		Temp. °F	Pressure (psig)
	Minimum Expected	Design Maximum		
Waste Gas Stream	220	224.7	100	2
Fuel Added to Gas Steam	39.3	39.3	100	2

	Number of Pilots	Type Fuel	Fuel Flow Rate (scfm [70°F & 14.7 psia]) per pilot
	one	Propane	0.33

For Stream Injection N/A	Stream Pressure (psig)		Total Stream Flow	Temp. °F	Velocity (ft/sec)
	Min. Expected		Rate (lb/hr)		

Number of Jet Streams	Diameter of Steam Jets (inches)	Design basis for steam injected (lb steam/lb hydrocarbon)

For Water Injection N/A	Water Pressure (psig) Min. Expected Design Max.	Total Water Flow Rate (gpm) Min. Expected Design Max.	No. of Water Jets	Diameter of Water Jets (inches)

Flare Height (ft) 40	Flare tip inside diameter (ft) 0.333
Capital Installed Cost $ 50,000	Annual Operating Cost $ 500

Supply an assembly drawing, dimensioned and to scale, to show clearly the operation of the flare system. Show interior dimensions and features of the equipment necessary to calculate its performance. Also describe the type of ignition system and its method of operation. Provide an explanation of the control system for steam flow rate and other operating variables.

05/96

Attached

5854 IH 10
Alleyton, TX 78935
Phone: 979-732-8193
Fax: 979-732-2393
Toll Free: 888-732-2400
E-Mail: g_kazmir@tornadotech.com
Web Site: www.tornadotech.com

Re: 4" x 40'-0" Tall Air Assist Flare
Tornado Quotation No.: **0000-08-07-10**

REV. 2

DESIGN DATA (INERT CASE):
Design Flow Rate: **264 SCFM**
Make up Gas (Propane) added to Waste Gas Stream to get the heating value up to 300 btu/scf with the design flow rate of 264 scfm: **39.3 scfm**
Waste Gas Composition: **Inert Vapors**
Mole Wt: **28.0134**
Design Temperature: **100 Degrees F**
Allowable Pressure Drop: **2 PSI.**
Pressure Drop across Flare and 4" OSSF Detonation Arrestor: **7.3" W.C.**

DESCRIPTION OF FLARE

- Self Supported Design (100 mph wind speed)
- SA-36 Carbon Steel Base Plate with Gussets
- Carbon Steel main Structure
- 304 Stainless Steel Flare Tip Section – Both for the Waste Gas Riser and the Air Annulus Tip
- 4"-150# RF Waste Gas Inlet Connection
- Tornado's Standard 2 Coat Paint System (Top Coat Color: Gloss Black)
- 1" x 2" Pilot Tracking System to raise and lower the pilot
- One (1) Dayton Blower – 3 HP, 3 Phase, 60 HZ, Explosion Proof 230 Volt Motor (Blower C/W Manual Outlet Damper, and Inlet Screen) Motor Starter by Client

Note: This blower will be a single speed blower with a manual operated outlet damper that is adjusted according to the amount of air needed to give a clean burn.

EPAPA010000378

Description of a TSI-6 TPMR-A Natural Gas Retractable Pilot System:

The Tornado TSI-6 natural gas Retractable pilot, C/W relight capabilities. The standard Tornado retractable pilot, model TSI-6 is manufactured to mount on the Tornado Flare Stack Tracking System. This allows you to raise and lower the pilot from grade level to the flare tip with a simple hoisting winch, saving you the expense of man lifts and or cranes, should your pilot ever need repair. This pilot will come with Fuel Hose and 16-4 SOW Electrical Cable. This pilot operates on a natural gas fuel supply of 12-15 psig and consumes approximately 20 scfh. (Extremely fuel-efficient compared to the other pilot systems on the market.) A Silicon Carbide nozzle assembly is mounted at the tip of the pilot with horizontal ports allowing fine blue flames to protrude into the waste gas stream. The Tornado Pilot Assembly consists of the following:

- Silicon Carbide Nozzle Assembly
- 310 Stainless Steel Nozzle Mounting Plate and Nozzle Cage
- 304 Stainless Steel, 2" Diameter Main Body Assembly (Ignitor Head)
- 304 Stainless Steel, 3" Diameter Air Inlet Housing
- ¼" Fuel Gas Inlet
- Internal Stainless Steel Tubing, Venturi and Mixer Assemblies

An Automatic Re-Light Package is mounted "piggyback" on this pilot system. The automatic re-light system consists of the following components:

- ✓ Flame Front Solenoid Valve
- ✓ NEMA 4 Transformer Enclosure
- ✓ NTK® Spark Transformer
- ✓ Tornado 4M4 Spark Electrode With Wire and Boot
- ✓ 1" Stainless Steel Flame Front Tube
- ✓ Stainless Steel Tubing with Air Intake Chamber, Orifice, and Venturi

The provided ¼" flexible fuel hose will connect to the fuel gas inlet connection on the pilot and runs down to the base of the stack, connecting to a Regulator, provided by Tornado. The provided 16-4 SOW Cable runs from the Transformer mounted on the Pilot, to the junction box mounted at the base of the flare. Two of the wires in this cable serve as thermocouple wires and the remaining two serve as power for the solenoid and spark transformer. You as the client will supply the wiring from the Control Panel to the Junction Box mounted at the base of the flare.

A 110 Volt Pilot Control Panel is included to light and monitor the pilot. A Timer, temperature switch, relays, terminals, etc. are mounted inside a NEMA 4X, non-metallic enclosure, for "unclassified" electrical areas. The control panel monitors the pilot via a type "k" thermocouple mounted in the pilot nozzle. The system will attempt a relight sequence, should the pilot be extinguished, for a set time period. If the pilot fails to relight, a red pilot fail indicator will illuminate. The pilot control panel includes a power on/off switch, three-position selector switch (hand/off/auto), white power on lamp, a green pilot prove lamp, and a red pilot fail lamp.

EPAPA010000379

DESCRIPTION OF THE DETONATION ARRESTOR

Tornado Technologies OSSF Sure Stop Detonation Arrestors are passive devices that have been designed to prevent the propagation of flame fronts back through transmission lines and piping configurations.

Tornado Detonation Arrestors (DA's) allow gas or vapor to pass through, but will stop dead even supersonic explosions. Our unique patented flame-quenching cell is unlike any in the industry.

Most DA manufacturers use conventional crimped-ribbon Flame Arrestor cells and simply stack multiple cells together. Tornado spent countless hours of research to develop a patented alumina ceramic media system. The oxidization and corrosion-proof beads act as a maze to the flame, allowing total protection and the longest continuous burn ratings in the industry.

The 4" OSSF Detonation Arrestor will include the following features:

- Carbon Steel Flame Cell Housing
- 304 Stainless Steel Flame Cell Grids
- Alumina Ceramic Flame Quenching Media (Beads)
- Carbon Steel Threaded Couplings for Differential Pressure, Temperature Monitoring, Media Fill and Drain
- 4"-150LB Carbon Steel Raised Face Inlet/Outlet Connections (Bi-Directional)
- United States Coast Guard Accepted, **Type I Burn Endurance** Tested (2 Hour Burn Time)
- Meets and Exceeds CSA-Z343 – Rev 12
- Gas Classifications: NEC Group C and D Gasses
- Removable Flame Cell, Cleanable to "As New" Condition if Performed by Tornado Technologies, Inc.

EPAPA010000380

AREA MAP

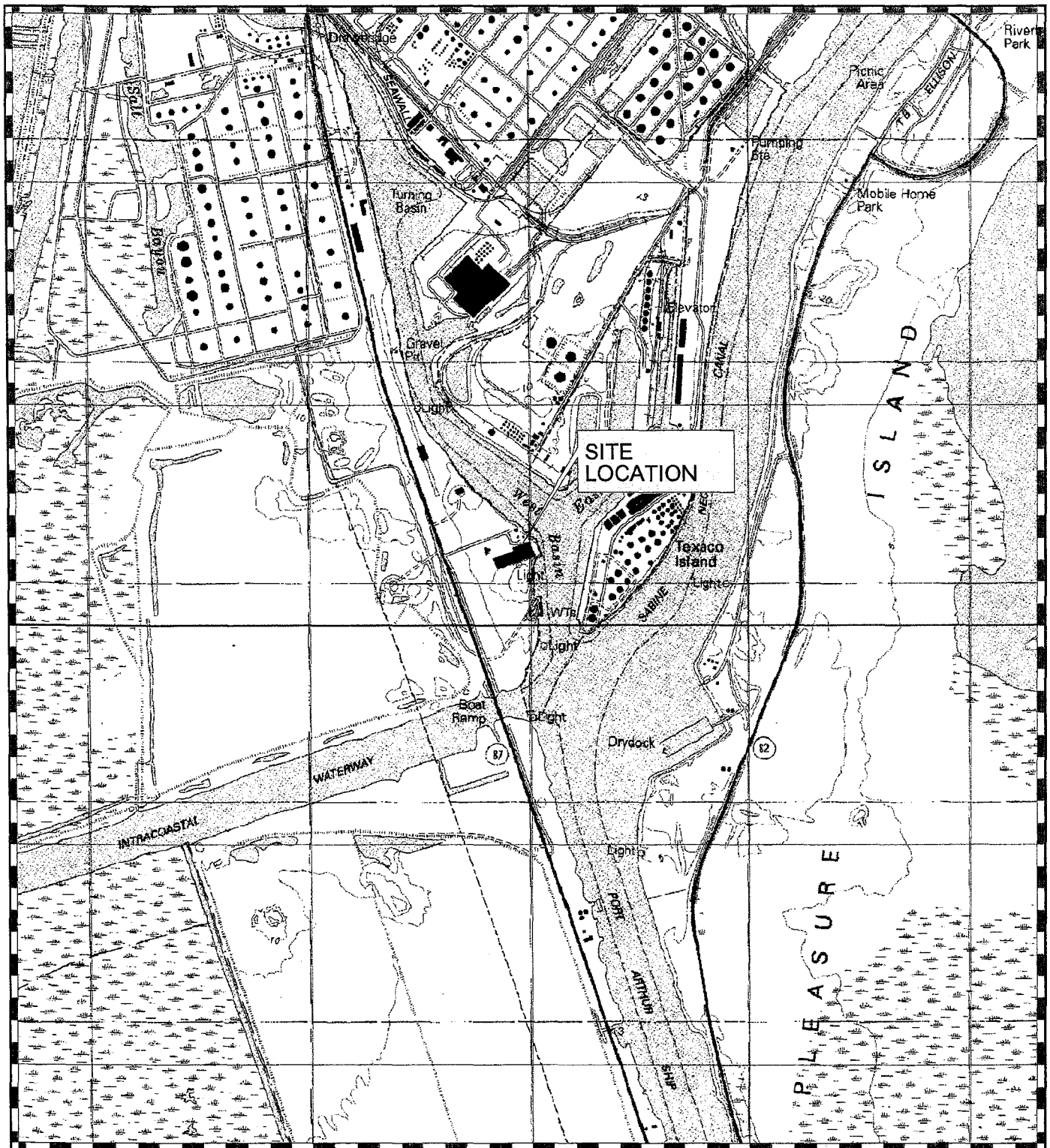

1320 0 1320
1:24,000 1" = 2000 feet feet

AREA MAP

CES ENVIRONMENTAL SERVICES, INC.

2420 SOUTH GULFWAY DRIVE

PORT ARTHUR, JEFFERSON COUNTY, TEXAS

North

FIGURE

1

Reproduced from 7.5' U.S.G.S. Topographic Quadrangle: Port Arthur South, Texas; Zone 15

DRAWN BY: LLS DATE: 08-08-2008

FILE: H:-client-CES-Pt Arthur-PT ART Topo.geo

FACILITY SITE PLAN

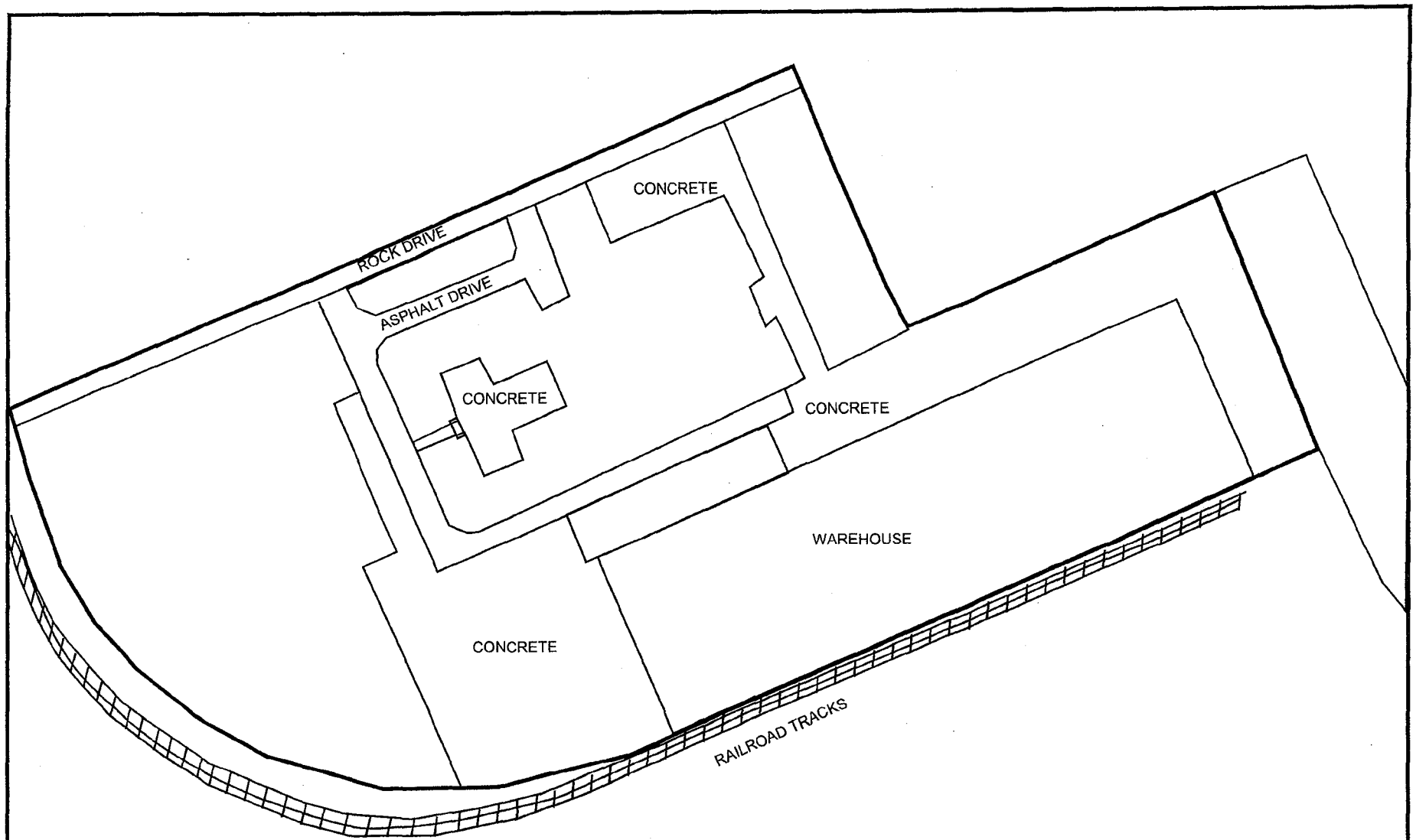

ENVIRONMENTAL PROFESSIONALS
WCM
The WCM Group, Inc.
P. O. Box 3247
Humble, TX 77347-3247
(281) 446-7070 Fax (281) 446-3348

SITE PLAN

CES ENVIRONMENTAL SERVICES, INC.
2420 SOUTH GULFWAY DRIVE
PORT ARTHUR, JEFFERSON COUNTY, TEXAS

FIGURE
2

DRAWN BY:	LLS
DATE:	08/08/2008
REV. DATE:	
DRAWING ID:	H:\client\CES\Port Arthur\PA Site. cvx

Approx. Scale in Feet
0 50 100

N

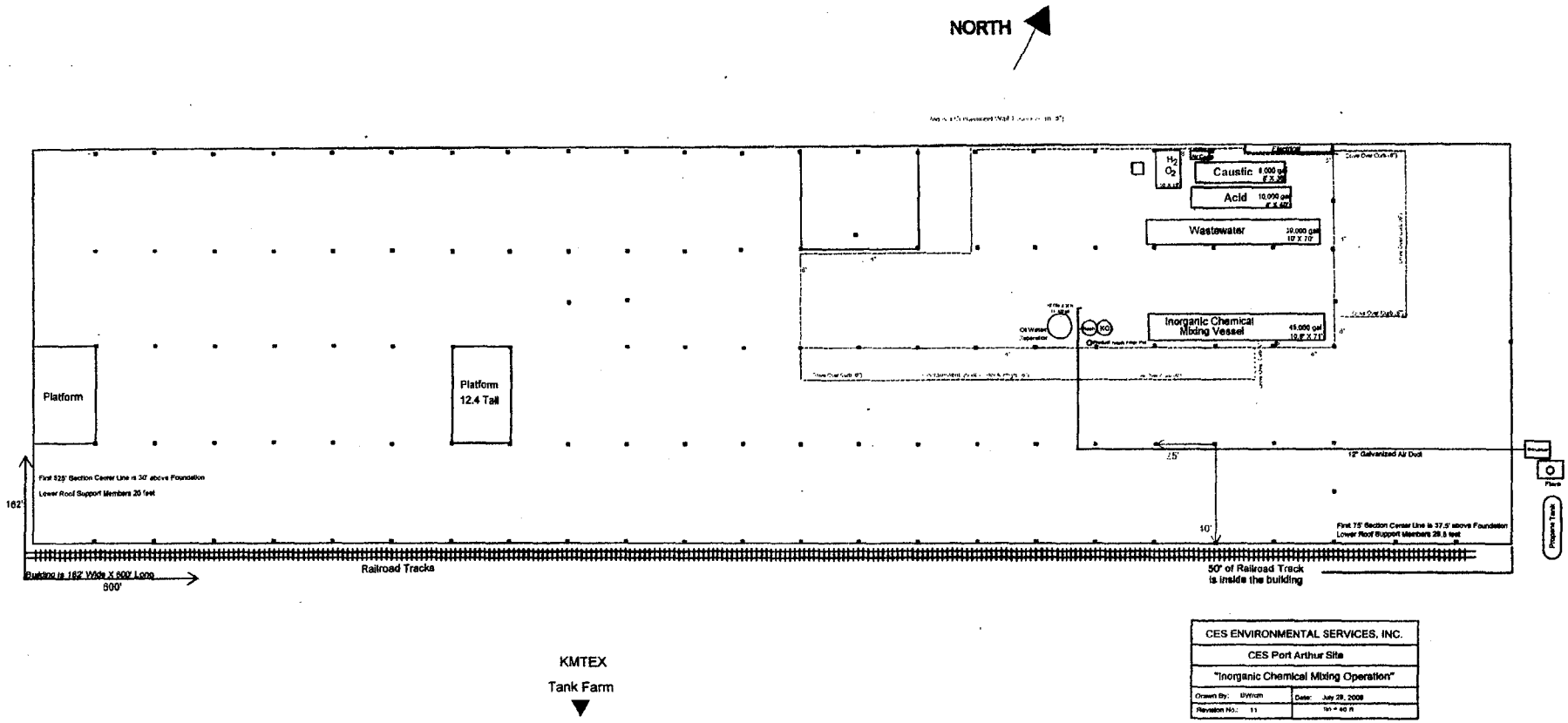

CES ENVIRONMENTAL SERVICES, INC.	
CES Port Arthur Site	
"Inorganic Chemical Mixing Operation"	
Drawn By: BWrom	Date: July 28, 2008
Revision No.: 11	1in = 40 ft

EPAPA010000385

PROCESS FLOW DIAGRAM

CES Port Arthur Inorganic Chemical Production Operation Process Flow Diagram

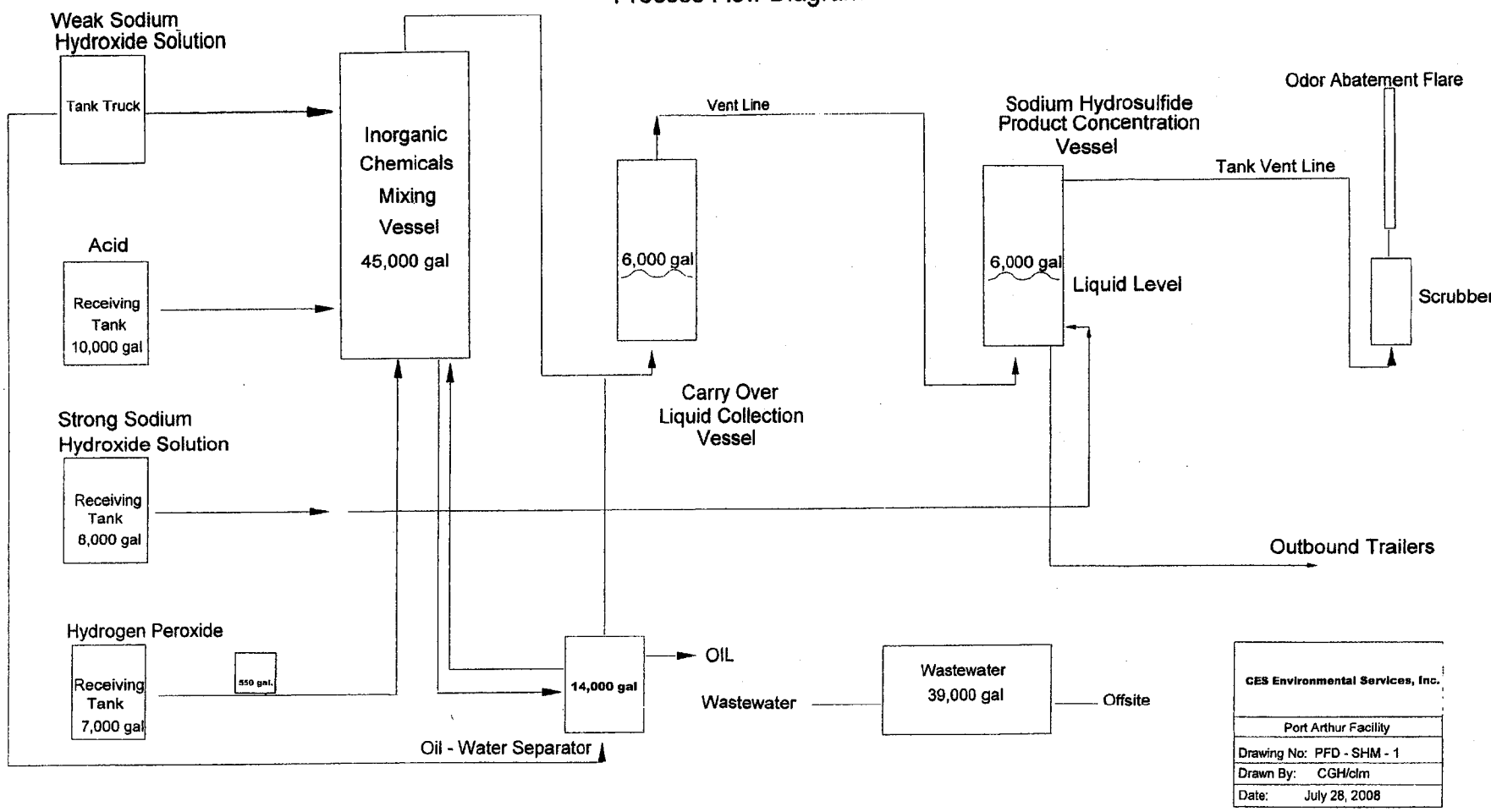

EPAPA010000387

TORNADO FLARE SCHEMATIC

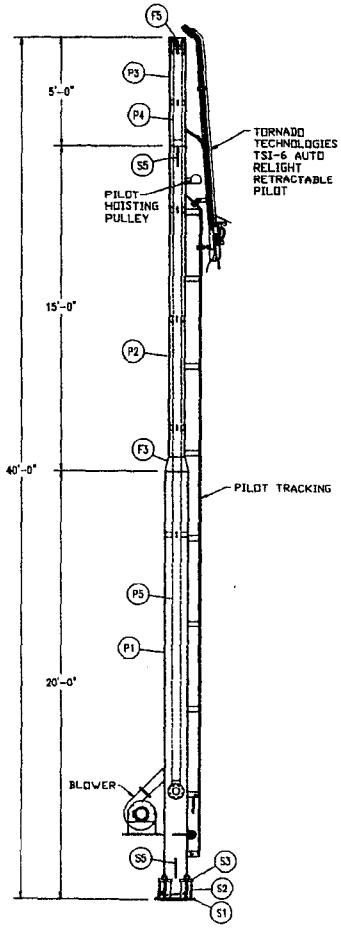

ELEVATION VIEW
SCALE: 3/16"=1'-0"
SEE PLAN VIEW FOR ORIENTATION

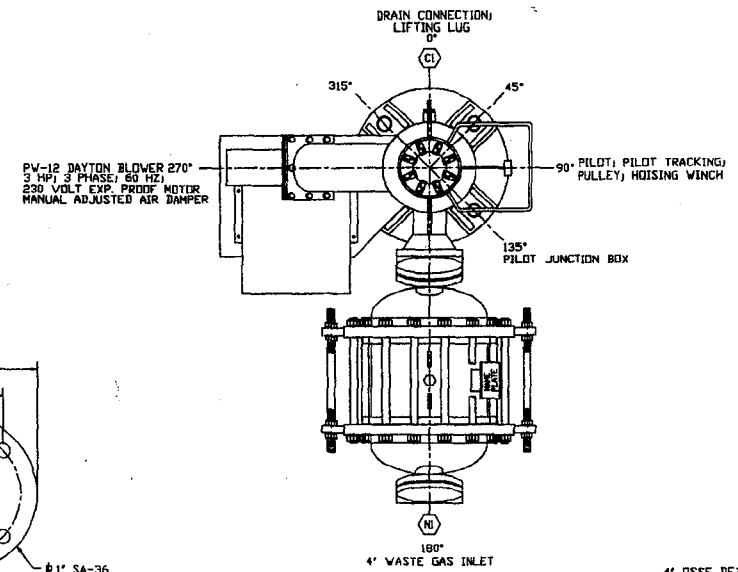

PLAN / ORIENTATION VIEW
SCALE: 3/4"=1'-0"

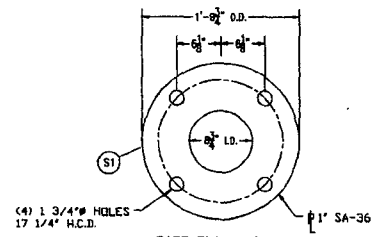

BASE PLATE DETAIL
SCALE: 3/4"=1'-0"

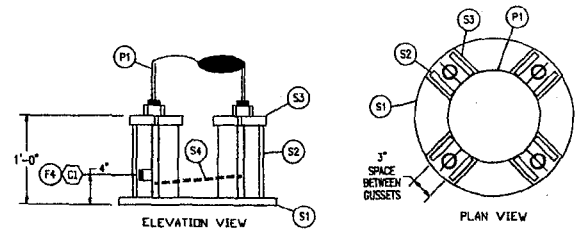

WELDED BASE PLATE DETAIL
SCALE: 3/4"=1'-0"

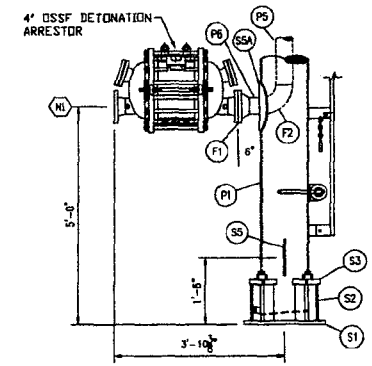

BOTTOM FLARE SECTION DETAIL
SCALE: 3/8"=1'-0"

NOZZLE LEGEND

MK	QTY	SIZE	RATING	CONN.	DESCRIPTION
N1	1	4"	150#	RF	WASTE GAS INLET CONNECTION
C1	1	1"	3000#	NPT	STACK DRAIN

BILL OF MATERIAL

MK	QTY	DESCRIPTION	MAT'L
F1	1	FLANGE; 4"-150# RFWN (STD. BORE)	SA-105
F2	1	ELBOW; 4"-90° LONG RADIUS BUTTWELD	SA-234-WPB
F3	1	CONCENTRIC REDUCER; 12" x 8" STD. WALL	SA-105
F4	1	COUPLING; HALF; 1"-3000# NPT W/ HEX PLUG	SA-105
F5	1	WELD CAP; 4" STD WALL BUTT WELD	316L SS
P1	1	PIPE; 12" STD. WALL	SA-106B
P2	1	PIPE; 8" STD. WALL	SA-106B
P3	1	PIPE; 8" STD. WALL	316 SS
P4	1	PIPE; 4" STD. WALL	316 SS
P5	1	PIPE; 4" STD. WALL	SA-106B
P6	1	PIPE; 4" STD. WALL	SA-106B
S1	1	PLATE; 1" x 21 3/4" O.D. x 8 3/4" I.D. (BASE)	SA-36
S2	8	PLATE; 3/4" x 4" x 9 3/4" (GUSSETS)	SA-36
S3	4	PLATE; 1 1/4" (CHAIR PLATE)	SA-36
S4	1	PLATE; 3/8" (SEAL PLATE)	SA-36
S5	3	PLATE; 1/2" (LIFT/TAIL LUG)	SA-516-70
SSA	1	PLATE; 3/8" x 10" O.D. x 4 5/8" I.D. (RE-PAD)	SA-36

NOTES

PAINT REQUIREMENTS:	
MANUFACTURER:	CARBOLINE
SANDBLAST:	SSPC-SP6
PRIMER:	CARBOZINC 11 GREEN 0300
INTERMEDIATE	
TOPCOAT:	CARBOLINE 134 HG BLACK
IGNITION SYSTEM	

No.	DATE	BY	CHK'D.	APP'D.	DESCRIPTION
1	8/25/08	GK	SJ	JC	CHANGED GAS RISER FROM 3" TO 4"
A	7/31/08	GK	SJ	JC	ISSUED FOR APPROVAL

REVISIONS

This drawing is the property of and intended only for the private use of TORNADO FLARE SYSTEMS and may not be reproduced or given to third parties without prior written consent.

DRAWN: GK
CHECKED: SJ
DATE: 8/25/08
APPROVED: JC
SCALE: AS NOTED
EST. WEIGHT: 2,844 LBS.

CUSTOMER:
CES ENVIRONMENTAL

3" x 40'-0" TALL AIR ASSIST FLARE STACK

Tornado Technologies Inc.
Alleyton, Texas
1-888-732-2400

P.O. No. 375506
JOBSITE: PORT ARTHUR, TX.
REVISION No. 1
DRAWING No. 9262-30-100
SHEET 1 of 1

EPAPA010000389

5854 IH 10
Alleyton, TX 78935
Phone: 979-732-8193
Fax: 979-732-2393
Toll Free: 888-732-2400
E-Mail: g_kazmir@tornadotech.com
Web Site: www.tornadotech.com

Attention:	**Mr. Marlin Moser**
Company:	CES Environmental
Phone:	713-539-6574 **Email: mmoser@cesenvironmental.com**
Date:	August 25, 2008
Re:	4" x 40'-0" Tall Air Assist Flare

Tornado Quotation No.: **0000-08-07-10**
REV. 2

Mr. Marlin Moser,

Due to the increased waste gas flow, please see the revised price, changing the proposed flare from 3" x 40' to 4" x 40'-0" tall. The Detonation Arrestor will change as well from a 3" to a 4" unit.

Tornado Technologies would like to say thank you for allowing us the opportunity to quote our product to you and CES Environmental.

Per your request, Tornado Technologies is offering its design of an Air Assist Flare to be of service in your upcoming application. This Flare will come with Tornado's TSI-6 Auto Relight Retractable Pilot and Tornado's 4" OSSF Detonation Arrestor.

Following will be a description, price, and delivery for this flare system.

DESIGN DATA (INERT CASE):

Design Flow Rate: **264 SCFM**
Make up Gas (Propane) added to Waste Gas Stream to get the heating value up to 300 btu/scf with the design flow rate of 264 scfm: **39.3 scfm**
Waste Gas Composition: **Inert Vapors**
Mole Wt: **28.0134**
Design Temperature: **100 Degrees F**
Allowable Pressure Drop: **2 PSI.**
Pressure Drop across Flare and 4" OSSF Detonation Arrestor: **7.3" W.C.**

DESIGN DATA (HIGH BTU CASE):

Design Flow Rate: **13.4 SCFM**
Waste Gas Composition: **(C10) Decane**
Mole Wt: **142.285**
Design Temperature: **100 Degrees F**

Allowable Pressure Drop: **2 PSI.**
Pressure Drop across Flare and 4" OSSF Detonation Arrestor: **0.6" W.C.**

DESCRIPTION OF FLARE

- Self Supported Design (100 mph wind speed)
- SA-36 Carbon Steel Base Plate with Gussets
- Carbon Steel main Structure
- 304 Stainless Steel Flare Tip Section – Both for the Waste Gas Riser and the Air Annulus Tip
- 4"-150# RF Waste Gas Inlet Connection
- Tornado's Standard 2 Coat Paint System (Top Coat Color: Gloss Black)
- 1" x 2" Pilot Tracking System to raise and lower the pilot
- One (1) Dayton Blower – 3 HP, 3 Phase, 60 HZ, Explosion Proof 230 Volt Motor (Blower C/W Manual Outlet Damper, and Inlet Screen) Motor Starter by Client

Note: This blower will be a single speed blower with a manual operated outlet damper that is adjusted according to the amount of air needed to give a clean burn.

Description of a TSI-6 TPMR-A Natural Gas Retractable Pilot System:

The Tornado TSI-6 natural gas Retractable pilot, C/W relight capabilities. The standard Tornado retractable pilot, model TSI-6 is manufactured to mount on the Tornado Flare Stack Tracking System. This allows you to raise and lower the pilot from grade level to the flare tip with a simple hoisting winch, saving you the expense of man lifts and or cranes, should your pilot ever need repair. This pilot will come with Fuel Hose and 16-4 SOW Electrical Cable. This pilot operates on a natural gas fuel supply of 12-15 psig and consumes approximately 20 scfh. (Extremely fuel-efficient compared to the other pilot systems on the market.) A Silicon Carbide nozzle assembly is mounted at the tip of the pilot with horizontal ports allowing fine blue flames to protrude into the waste gas stream. The Tornado Pilot Assembly consists of the following:

- Silicon Carbide Nozzle Assembly
- 310 Stainless Steel Nozzle Mounting Plate and Nozzle Cage
- 304 Stainless Steel, 2" Diameter Main Body Assembly (Ignitor Head)
- 304 Stainless Steel, 3" Diameter Air Inlet Housing
- ¼" Fuel Gas Inlet
- Internal Stainless Steel Tubing, Venturi and Mixer Assemblies

An Automatic Re-Light Package is mounted "piggyback" on this pilot system. The automatic re-light system consists of the following components:

- ✓ Flame Front Solenoid Valve
- ✓ NEMA 4 Transformer Enclosure
- ✓ NTK® Spark Transformer
- ✓ Tornado 4M4 Spark Electrode With Wire and Boot
- ✓ 1" Stainless Steel Flame Front Tube
- ✓ Stainless Steel Tubing with Air Intake Chamber, Orifice, and Venturi

EPAPA010000391

The provided ¼" flexible fuel hose will connect to the fuel gas inlet connection on the pilot and runs down to the base of the stack, connecting to a Regulator, provided by Tornado. The provided 16-4 SOW Cable runs from the Transformer mounted on the Pilot, to the junction box mounted at the base of the flare. Two of the wires in this cable serve as thermocouple wires and the remaining two serve as power for the solenoid and spark transformer. You as the client will supply the wiring from the Control Panel to the Junction Box mounted at the base of the flare.

A 110 Volt Pilot Control Panel is included to light and monitor the pilot. A Timer, temperature switch, relays, terminals, etc. are mounted inside a NEMA 4X, non-metallic enclosure, for "unclassified" electrical areas. The control panel monitors the pilot via a type "k" thermocouple mounted in the pilot nozzle. The system will attempt a relight sequence, should the pilot be extinguished, for a set time period. If the pilot fails to relight, a red pilot fail indicator will illuminate. The pilot control panel includes a power on/off switch, three-position selector switch (hand/off/auto), white power on lamp, a green pilot prove lamp, and a red pilot fail lamp.

DESCRIPTION OF THE DETONATION ARRESTOR

Tornado Technologies OSSF Sure Stop Detonation Arrestors are passive devices that have been designed to prevent the propagation of flame fronts back through transmission lines and piping configurations.

Tornado Detonation Arrestors (DA's) allow gas or vapor to pass through, but will stop dead even supersonic explosions. Our unique patented flame-quenching cell is unlike any in the industry.

Most DA manufacturers use conventional crimped-ribbon Flame Arrestor cells and simply stack multiple cells together. Tornado spent countless hours of research to develop a patented alumina ceramic media system. The oxidization and corrosion-proof beads act as a maze to the flame, allowing total protection and the longest continuous burn ratings in the industry.

The 4" OSSF Detonation Arrestor will include the following features:

- Carbon Steel Flame Cell Housing
- 304 Stainless Steel Flame Cell Grids
- Alumina Ceramic Flame Quenching Media (Beads)
- Carbon Steel Threaded Couplings for Differential Pressure, Temperature Monitoring, Media Fill and Drain
- 4"-150LB Carbon Steel Raised Face Inlet/Outlet Connections (Bi-Directional)
- United States Coast Guard Accepted, **Type I Burn Endurance** Tested (2 Hour Burn Time)
- Meets and Exceeds CSA-Z343 – Rev 12
- Gas Classifications: NEC Group C and D Gasses
- Removable Flame Cell, Cleanable to "As New" Condition if Performed by Tornado Technologies, Inc.

PRICING:

Flare, Pilot, Control Panel, Blower, and 4" Detonation Arrestor as describe above: **$41,540.00** plus shipping

EPAPA010000392

Price does not include any X-Ray or Special Testing

DELIVERY: 6 to 8 weeks after receiving a purchase order. If approval drawings are required, the delivery will be 6 to 8 weeks after receiving clients approval for fabrication.

PAYMENT TERMS:

- Terms of payment will be 100% net 30 days after invoicing
- 100% invoiced upon equipment ready for shipment
- Prices quoted are in U.S. Dollars
- Prices are quoted F.O.B. Tornado Technologies, Inc. yard, Alleyton Texas
- Prices do not include federal, state, or local taxes, excise, use, or other taxes.
- Cancellation charges will be 125% of charges incurred until written notification of cancellation is received.

Tornado Technologies warrants the Work against defective workmanship and /or materials, under normal and proper use, for a period of twelve (12) months. Warranty shall be replacement of defective part only; on-site labor and/or associated on-site costs to replace defective part are not covered under warranty. Sub-vendor Control parts (Eg. Instruments), purchased by Tornado, will only receive pass through warranty if warranty is deemed applicable by the original equipment manufacturer.

Tornado offers the very best in detonation protection. Please visit our website at the following address: www.tornadotech.com Thank you again for the opportunity to quote our product for your application. Please call if you have any questions or comments.

Thanks Marlin,

Gene Kazmir
Tornado Technologies Inc.

EPAPA010000393

H:\CLIENT\CES\Port Arthur\NapOil\Ltrs.doc

November 13, 2008

Air Permits Initial Review Team (APIRT), MC161
Texas Commission on Environmental Quality
12100 Park 35 Circle, Building C, Third Floor
Austin, Texas 78753

Reference: Registration of Permits By Rule
Port Arthur Chemical & Environmental Services, LLC
2420 Highway 87 South
Port Arthur, Jefferson County, Texas
RN105156111

Dear Sir or Madam:

On behalf of Port Arthur Chemical & Environmental Services, please find enclosed documentation to authorize the processing of an aqueous feed stream to recover Naphthenic Acid under Permits by Rule §106.261 and §106.472.

If you have questions regarding this registration, or require further information, please do not hesitate to contact Mr. Matt Bowman at (713) 676-1460, or me directly at (281) 446-7070.

Sincerely,

Philip Evans
Director, Technical Services

Enclosure

cc: M. Bowman
H. Ross – TCEQ Region 10

H:\CLIENT\CES\Port Arthur\NapOil\Ltrs.doc

November 13, 2008

Mr. John Racanelli
Revenue Section (MC-214)
TEXAS COMMISSION ON ENVIRONMENTAL QUALITY
12100 Park 35 Circle, Building F, Room 1206
Austin, Texas 78753

Reference: Registration of Permits By Rule
Port Arthur Chemical & Environmental Services, LLC
2420 Highway 87 South
Port Arthur, Jefferson County, Texas
RN105156111

Dear Mr. Racanelli:

On behalf of Port Arthur Chemical & Environmental Services, please find enclosed a check in the amount of $100 to cover the fee for the above referenced Permit By Rule (PBR) registration. A copy of the PI-7-CERT Form is also enclosed.

If you have questions regarding this registration, or require further information, please do not hesitate to contact Mr. Matt Bowman at (713) 676-1460, or me directly at (281) 446-7070.

Sincerely,

Philip Evans
Director, Technical Services

Enclosure

cc: M. Bowman

PERMIT-BY-RULE AUTHORIZATION FOR

NAPHTHENIC ACID PRODUCTION

Prepared for
PORT ARTHUR CHEMICAL & ENVIRONMENTAL SERVICES, LLC
Port Arthur, Jefferson County, Texas

Prepared by
THE WCM GROUP, INC.
Humble, Texas

November 2008

PERMIT-BY-RULE AUTHORIZATION FOR

NAPHTHENIC ACID PRODUCTION

Prepared for
PORT ARTHUR CHEMICAL & ENVIRONMENTAL SERVICES, LLC

Port Arthur, Jefferson County, Texas

TABLE OF CONTENTS

Page

INTRODUCTION iii

1.0 PROCESS DESCRIPTION 1

2.0 EMISSIONS SUMMARY 2

3.0 PERMIT-BY-RULE APPLICABILITY 3

EPAPA010000398

ATTACHMENTS

A - EMISSION CALCULATIONS

B - MATERIAL SAFETY DATA SHEETS

TCEQ FORMS AND TABLES

PI-7-CERT FORM

TCEQ §106.4 CHECKLIST

TCEQ §106.261 CHECKLIST

TCEQ §106.472 CHECKLIST

FIGURES

1 - AREA MAP

2 - FACILITY SITE PLAN

3 - PROCESS FLOW DIAGRAM

EPAPA010000399

INTRODUCTION

Port Arthur Chemical & Environmental Services, LLC intends to construct and operate equipment for use in the production of Naphthenic Acid on a property located at 2420 Highway 87 South of Port Arthur in Jefferson County, Texas. The enclosed documentation is submitted to demonstrate Permit-By-Rule (PBR) authorization for the production equipment and associated emissions. Some supporting equipment in the project was previously authorized under PBR Registration No. 86173.

The production process involves the initial acidification of an aqueous feed stream composed of Naphthenic acid and dissolved sodium hydroxide and sodium sulfide salts. The neutralized mixture is settled, phase separated with the Naphthenic Acid decanted to a tank trailer while the residual water and salts are transferred to the existing wastewater storage. Operational details are found in the Process Description section of this registration.

The facility is located in the Beaumont/Port Arthur ozone nonattainment area and will be classified as a minor source for emissions of Volatile Organic Compound (VOC) and Nitrogen Oxides (NO_X). The emissions associated with this project are calculated as less than 1.0 tons per year of VOC. Federal nonattainment and PSD program requirements do not apply.

A PI-7-CERT Form with Texas Commission on Environmental Quality (TCEQ) §106.4, §106.261, and §106.472 Checklists are provided in the Forms section of this report. Emission calculations are provided in Attachment A. The figures section provides an Area Map, Facility Site Plan and Process Flow Diagram.

EPAPA010000400

1.0 PROCESS DESCRIPTION

An aqueous feed stream composed of dissolved sodium salts (sodium sulfide, sodium hydroxide) and Naphthenic acid is delivered to the facility in tank trucks or isocontainers. The Naphthenic acid is a clear light yellow viscous liquid with low vapor pressure comprised of mixed molecular weights from 250 to 300 units. The initial boiling point of the Naphthenic Acid is over 300 degree Fahrenheit. The process is designed to extract the Naphthenic acid from the Naphthenic caustic solution.

The feed stream is batch transferred from the shipping container into a closed 17,500-gallon mix vessel (T11) using a tank-to-tank vapor exchange (vapor balance). Sulfuric acid is then added from an existing 8,000-gallon horizontal fixed roof tank (T4) to react with the caustic sodium salts.

The mixture is decanted to a separator tank (T12) where it is allowed to settle. Process wastewater solutions from the mix vessel (T11) and the separator tank (T12) are transferred to an existing 39,000-gallon wastewater tank (T8) for storage prior to off-site shipment. The Naphthenic acid is pumped to tank trucks or isocontainers for shipment off-site to the customer. The mix tank and the separator tank both vent to an existing abatement system composed of a caustic scrubber and flare (FL1) to control vapors. Emission from tank truck or isocontainer loading will also vent to the existing abatement system. Vapor balance may also be employed during loading to further minimize emissions.

The sulfuric acid tank, the wastewater tank and the abatement system were previously authorized under PBR Registration No. 86173.

EPAPA010000401

2.0 EMISSIONS SUMMARY

Emissions associated with the project include those generated from storage, processing, and transfer operations, as well as from potential fugitive equipment and piping component leaks. Displacement losses from inbound material transfers are minimized using vapor balance.

Potential emissions of NOx and CO from the existing flare were previously authorized by PBR Registration No. 86173. Therefore, the NOx and CO emission shown in this project submittal do not represent an increase above the previous registered rates. The emissions of the residual uncombusted propane fuel are included with this submittal as they were inadvertently omitted in the previous flare registration.

Fugitive emissions from potential leaks at valves, pumps, connections and other equipment associated with this project are calculated using the methods and emission factors specified in the TCEQ document "Air Permit Technical Guidance for Chemical Sources: Equipment Leak Fugitives". Reduction credit is taken for operations personnel monitoring the operations for leaks that can be detected by audible, visible or olfactory means.

The emissions increase associated with this project less than 1.0 tons per year of VOC. As a result, the project does not trigger nonattainment netting or PSD review.

EPAPA010000402

3.0 PERMIT-BY-RULE APPLICABILITY

PROJECT CHEMICALS SUMMARY

CAS No.	Chemical	PBR
8012-95-1	Naphthenic Acid	106.261
1313-82-2	Sodium Sulfide	106.472
1310-73-2	Sodium Hydroxide	106.472
7664-93-9	Sulfuric Acid solution	106.472

PROJECT EQUIPMENT SUMMARY

Status	FIN	Description	Project Use	PBR	Previous Registration Number
existing	T4	8,000-gal capacity horizontal tank	Sulfuric Acid Storage	106.472 (5)	86173
new	T11	17,500-gal capacity Vert Fixed Roof Tank	Mix Tank	**106.261**	N/A
new	T12	17,500-gal capacity Vert Fixed Roof Tank	Separator Tank	**106.261**	N/A
existing	T8	39,000-gal capacity horizontal tank	Wastewater storage	106.472 (2)	86173
existing	TTL	Tank Truck/Isocontainer loading/unloading	Material loading/unloading	**106.261**	N/A
existing	N/A	Caustic scrubber	Vent control	N/A	86173
existing	FL1	Flare	Vent control	106.492	86173

EPAPA010000403

ATTACHMENT A

EMISSION CALCULATIONS

Port Arthur Chemical & Environmental Services, LLC
Naphthenic Caustic Oil Process
SUMMARY OF EMISSIONS AND PBR APPLICABILITY DOCUMENTATION

PBR 106.472

Chemical	Storage		Load		Total	
	lb/hr	TPY	lb/hr	TPY	lb/hr	TPY
Sodium Sulfide	0.0018	0.0001			0.0018	0.0001
Sodium Hydroxide	0.0061	0.0003			0.0061	0.0003
Water	0.7924	0.0578	0.0083	0.0006	0.8007	0.0584
Neutralization salts	0.3265	0.0239	0.0023	0.0002	0.3289	0.0240
Sulfuric Acid	0.0002	0.0000			0.0002	0.0000

PBR 106.492 Flare Combustion

NOX		0.7606	**3.3316**
CO		1.5185	**6.6511**
SO2		0.0535	**0.2344**
Propane		2.7483	**0.2023**

PBR 106.261

Chemical	Storage & Load		Fugitives		Total	
	lb/hr	TPY	lb/hr	TPY	lb/hr	TPY
Naphthenic Acid	0.0413	0.0027	0.0836	0.3662	0.1249	0.3688

PBR Compliance

Chemical	Applicable PBR	TLV mg/m^3	PBR Allowable		PBR Compliance	
			lb/hr	TPY	lb/hr	TPY
Naphthenic Acid	106.261	N/A	1.0	4.4	YES	YES
Propane	106.261	N/A	6.0	10.0	YES	YES

EPAPA010000405

Port Arthur Chemical & Environmental Services, LLC
TANK EMISSION CALCULATIONS

	Tank ID:	T11	T4	T12	T8
	Material:	Naphthenic Caustic	Sulfuric Acid	Naphthenic Acid	Wastewater
Annual Throughput, gal/yr	Q =	351,000	35,100	70,200	666,900
Max Hourly Transfer Rate, gal/hr	FR =	2,000	4,000	500	4,000
Emissions:					
Maximum Hourly Emissions, lb/hr	**Lmax =**	**0.06146**	**0.00015**	**0.01536**	**1.08849**
Total Annual Emissions, TPY	**Lt =**	**0.00310**	**0.00000**	**0.00189**	**0.07954**
Annual Average Hourly Emis, lb/hr	Lavg =	0.001	0.000	0.000	0.018
Standing loss, lb/yr	Ls =	0.125	0.001	2.571	62.313
Working loss, lb/yr	Lw =	6.073	0.000	1.215	96.772
Material Properties:					
Molecular Weight, lb/lb-mole	Mv =	300.00	98.07	300.00	18.00
Vapor Pressure @ Tla, psia	Pva =	0.12	0.00	0.12	0.34
Vapor Pressure @ Tln, psia	Pvn =	0.10	0.00	0.10	0.29
Vapor Pressure @ Tlx, psia	Pvx =	0.14	0.00	0.14	0.40
Max. Vapor Pressure @ mTlx, psia	Pvmax =	0.22	0.00	0.22	0.63
Tank Properties:					
Vapor control device		flare	none	flare	none
Vapor control efficiency, % [scrub + flare]	e =	98	0	98	0
Vapor Balance efficiency, tank filling	VBe =	0	0	0	0
Capacity volume, gal	Cv =	15,039	8,460	15,039	41,123
Shell Diameter, ft	D =	8.0	6.0	8.0	10.0
Shell Height/Length, ft	Hs =	40.0	40.0	40.0	70.0
Tank Orientation (vertical or horizontal)		vert	horiz	horiz	horiz
Roof type (cone or dome)		cone	N/A	N/A	N/A
Tank Color (white, light gray, other)		white	white	white	white
Solor absorbance factor	a =	0.17	0.17	0.17	0.17
Pressure vent setting, psig	Pbp =	0.3	0	0	0
Vacuum vent setting, psia	Pbv =	-0.3	0	0	0
Effective diameter, ft	De =	8.0	17.5	20.2	29.9
Avg. Liquid Height, ft	Hl =	20.0	3.0	4.0	5.0
Max. Liquid Height, ft	Hlx =	40.0	6.0	8.0	10.0
Roof Outage, ft	Hro =	0.00	0.00	0.00	0.00
Vapor Space Outage, ft	Hvo =	20.00	3.00	4.00	5.00
Vapor space volume, ft^3	Vv =	1005.31	720.37	1280.65	3501.78
Operating Conditions (Houston, Tx):					
Atmospheric pressure, psia	Pa =	14.7	14.7	14.7	14.7
Annual Avg. Daily solar insulation factor, Btu/ft^2 da	I =	1351	1351	1351	1351
Annual Avg. Daily max. ambient temp, R	Tax =	539.1	539.1	539.1	539.1
Annual Avg. Daily min. ambient temp, R	Tan =	517.4	517.4	517.4	517.4
Annual Avg. Daily vapor temp. range, R	^Tv =	22.1	22.1	22.1	22.1
Annual Daily avg. liquid surface temp, R	Tla =	530.1	530.1	530.1	530.1
Annual Avg. Daily min. liquid surface temp., R	Tln =	524.6	524.6	524.6	524.6
Annual Avg. Daily max. liquid surface temp., R	Tlx =	535.6	535.6	535.6	535.6
Highest Month Daily solar insulation factor, Btu/ft^2	mI =	1898	1898	1898	1898
Highest Month Daily max. ambient temp, R	mTax =	553.6	553.6	553.6	553.6
Highest Month Daily min. ambient temp, R	mTan =	532.5	532.5	532.5	532.5
Highest Month Daily vapor temp. range, R	m^Tv =	24.2	24.2	24.2	24.2
Highest Month Daily max. liquid surface temp., R	mTlx =	551.7	551.7	551.7	551.7
Gas Constant, psia-ft^3/lb mole-R	R =	10.73	10.73	10.73	10.73
Vapor Density, lb/ft^3	Wv =	0.006	0.000	0.006	0.001
Daily vapor pressure range, psia	^Pv =	0.037	0.000	0.037	0.115
Vapor space expansion factor	Ke =	0.003	0.042	0.044	0.050
Vented vapor saturation factor	Ks =	0.886	1.000	0.975	0.918
Working Loss Product Factor	Kp =	1.00	1.00	1.00	1.00
Turnovers	N =	23.34	4.15	4.67	16.22
Turnover factor	Kn =	1.00	1.00	1.00	1.00
Operating Days, days/yr	Days =	365	365	365	365

note: assume worst case by using 100% Naphthenic acid properties for the process tanks.

EPAPA010000406

LOADING LOSS EMISSIONS

		T12	T8
	Material:	Naphthenic Acid	Wastewater
	EPN:	LDR-001	LDR-001
Annual Throughput, gal/yr	Th =	70,200	666,900
Max Hourly Fill Rate, gal/hr	FR =	500	4,000
Emissions:			
Maximum Hourly Emissions, lb/hr	**Il =**	**0.0057**	**0.007805**
Annual Emissions, TPY	**LL =**	**0.0004**	**0.000573**

Filling loss, lb/hr

Il = [(12.46 x ((S x VPx x MW) / Tx) / 1000) x FR x (c/100) x (1-e/100))]

Loading loss, TPY

LL = [(12.46 x ((S x VPa x MW) / Ta) / 1000) x Th x (c/100) x (1-e/100))] / 2000

Material Properties:			
Molecular Weight, lb/lb-mole	Mv =	300.00	18.00
Vapor Pressure @ Tlx, psia	Pvx =	0.14	0.40
Vapor Pressure @ Tla, psia	Pva =	0.12	0.34
Vapor control device		flare	none
Capture efficiency, %	c =	100	100
Vapor control efficiency, %	e =	98	98
Max Liquid Temp., R	Tlx =	551.67	551.67
Averag Liquid Temp., R	Tla =	530.08	530.08
Saturation Factor	S =	0.6	0.6

Loading Sum	TOTAL	
EPN	**lb/hr**	**TPY**
LDR-001	0.01353	0.00780

Speciation

	TOTAL	
	lb/hr	TPY
Naphthenic Acid	0.0029	0.0002
Water	0.0083	0.0006
Neutralization salts	0.0023	0.0002

Calc

EPAPA010000407

Port Arthur Chemical & Environmental Services, LLC
FUGITIVE EMISSION ESTIMATES

MATERIAL	FIN	VP (psia)	Liquid wt frac.	Stream Type LL,HL,G/V	Valves	lbs/hr	Flanges	lbs/hr	Gas/Vapor Valves	lbs/hr	Pumps	lbs/hr	Relief Valves	lbs/hr	Total lb/hr	EMISSIONS (lb/hr)	(ton/yr)
Naphthenic Acid	T11	0.72861	1.0000	LL	10	0.035	20	0.01	0	0	1	0.0386	0	0	0.0836	0.0836	0.3662

Speciation	Total lb/hr	Total TPY
Naphthenic Acid	0.0836	0.3662

Monitoring is performed in accordance with TCEQ AVO.

SOCMI Factors	Valves	Flanges	G/V Vlv	G/V Flng	Pumps	Relief Vlv	Agitator
Light Liquid (LL)	0.0035	0.0005	--	--	0.0386	--	0.0005
Gas / Vapor (G/V)	--	--	0.0089	0.0029	--	0.2293	--
Heavy Liquid (HL)	0.0007	0.00007	--	--	0.0161	--	0.00007

* Per TCEQ guidance, fugitive emissions are not estimated for materials with vapor pressure < 0.002 psia.

EPAPA010000408

Port Arthur Chemical & Environmental Services, LLC
Flare Combustion Calculation

Flare design data 224.7 scf /min
Vent gas composition 24 ppm sulfur compounds to flare maximum worst case

Calculation Basis: IDEAL GAS LAW, PV = nRT

		data
where:	P = pressure (psia)	14.7 psia
	V = volumetric flow rate (scf /min)	224.7 scf /min
	R = Universal Gas Constant	10.73 psia scf / lb mole R
	T= Temperature	530.1 R
	n = no. of moles of gas	

Vent gas sulfur compound portion is 24 ppm

then, $n = PV/RT * 60 * 24 / 10^6$

0.00084 lb mole sulfur / hr

Flare combustion will convert the sulfur compounds in the vent stream to SO2.

To convert to SO2, 1 lb mole SO2 is 64 lb

0.0535 lb/hr SO2
0.23 TPY SO2

COMBUSTION

	vent gas	pilot gas	supplemental gas	propane
heat	0	2316	2316 Btu/scf	8.66 ft3/lb
flow	13482	20	2360 scf/hr	
rate	118,102,320	175,200	20,673,600 scf/year	

	Factor lb/MMBtu	NOx TPY	NOx lb/hr	Factor lb/MMBtu	CO TPY	CO lb/hr	VOC (propane)TPY	VOC (propane) lb/hr
Vent Gas	0.1380	0.000	0.000	0.2755	0.000	0.000	0.000	0.000
Pilot Gas	0.1380	0.028	0.006	0.2755	0.056	0.013	0.101	0.023
Supplemental Gas	0.1380	3.304	0.754	0.2755	6.595	1.506	0.101	2.725
Total	N/A	3.332	0.761	N/A	6.651	1.519	0.202	2.748

Flare Destruction/Removal Efficiency and Emission Factors are based on TCEQ Technical Guidance for Chemical Sources: Flares and Vapor Oxidizers: RG-109 October 2000 for high Btu non-steam assisted flares.

Pilot Gas Sample calculation:
NOx ton/yr: (2,316 Btu/lb) * (175,200 lb/MMBtu) / 1000000 * (0.1380 lb/yr) / 2000 = 0.028 tpy
NOx lb/hr: (2,316 Btu/lb) * (20 lb/MMBtu) / 1000000 * (0.1380 lb/yr) = 0.006 lb/hr

[3] TCEQ Technical Flare Guidance states in Table 4 Flare Factors - PM emission factor is none.

Propane Sample Calculation:

Propane ton/yr

Propane lb/hr (2,360 cf/hr) / (8.66 cf/lb) * (100 - 99)/ 100 = 2.725 lb/hr

Calc

EPAPA010000409

Storage Tanks

Tank ID	TYPE FXR or IFR	Orientation vert./horiz.	Roof Type cone/dome	Shell Color	Solar Absorptance factor	Shell Diameter (ft)	Shell Height/Length (ft)	Calculated Capacity (gal)	Fill/Withdraw Rate (gal/hr)	Batch 4,500 gallons	Annual Rate gal /year		
T11	FXR	vert	cone	white	0.17	8	40	15,039	4,000	4,500	702,000	T11	Naphthenic Caustic
T4	FXR	horiz	N/A	white	0.17	6	40	8,460	4,000	225	35,100	T4	Sulfuric Acid
T12	FXR	horiz	N/A	white	0.17	8	40	15,039	500	450	70,200	T12	Naphthenic Acid
T8	FXR	horiz	N/A	white	0.17	10	70	41,123	4,000	4,275	666,900	T8	Wastewater
										batch per year	156		

note: 3 batch per week, 52 weeks per year

EPAPA010000410

Port Arthur Chemical & Environmental Services, LLC
NASH PROJECT STREAMS

need properties for NAP OIL

Material Naphthenic Caustic **Constituents**	TLV (mg/m3)	MW (lb/lb mole)	Antoine Constants A	B	C	Density (lb/gal)	Conc. wt %	STORAGE Liquid moles	Liquid mole frac	ANNUAL Avg. Part. press.	Min. Part. press.	Max. A Part. press.	vapor wt.	vapor wt. frac.	STORAGE MAXIMUM HOURLY Avg. Part. press.	Min. Part. press.	Max. A Part. press.	vapor wt.	vapor wt. frac.
Naphthenic Acid	-	300	7.11	1563.28	247.06	8.2	50.00	0.1667	0.0664	0.0246	0.0210	0.0286	21.3776	0.5612	--	--	0.0436	21.378	0.5612
Sodium Sulfide		78	0	9999	1	11	3.00	0.0384	0.0153	0.0000	0.0000	0.0000	0.0000	0.0000	--	--	0.0000	0.000	0.0000
Sodium Hydroxide	2	40	0	9999	1	18.09	10.00	0.2500	0.0996	0.0000	0.0000	0.0000	0.0000	0.0000	--	--	0.0000	0.000	0.0000
Water		18	6.93897	1326.48	214.31	8.34	37.00	2.0556	0.8187	0.3200	0.2697	0.3780	16.7173	0.4388	--	--	0.6001	16.717	0.4388
							100.0	2.5	1.0	0.3	0.3	0.4	38.1	1.0	0.0	0.0	0.6	38.1	1.0
							Total	Total	Total	Pva	Pvn	Pvx	Mv	Total	Pva	Pvn	Pvx	Mv	Total

Constituents	TLV (mg/m3)	MW (lb/lb mole)	Antoine Constants A	B	C	Density (lb/gal)	Conc. wt %	Liquid moles	Liquid mole frac	ANNUAL Avg. Part. press.	Min. Part. press.	Max. A Part. press.	vapor wt.	vapor wt. frac.	MAXIMUM HOURLY Avg. Part. press.	Min. Part. press.	Max. A Part. press.	vapor wt.	vapor wt. frac.
Sulfuric Acid	1	98.07	10.468	4145.84	273.15	15.27	100	1.0197	1.0000	0.0000	0.0000	0.0000	98.0700	1.0000	--	--	0.0000	98.070	1.0000
							100	1.0197	1.0000	0.0000	0.0000	0.0000	98.0700	1.0000	0.0000	0.0000	0.0000	98.070	1.0000
							Total	Total	Total	Pva	Pvn	Pvx	Mv	Total	Pva	Pvn	Pvx	Mv	Total

Hold Tank **Constituents**	TLV (mg/m3)	MW (lb/lb mole)	Antoine Constants A	B	C	Density (lb/gal)	Conc. wt %	Liquid moles	Liquid mole frac	ANNUAL Avg. Part. press.	Min. Part. press.	Max. A Part. press.	vapor wt.	vapor wt. frac.	MAXIMUM HOURLY Avg. Part. press.	Min. Part. press.	Max. A Part. press.	vapor wt.	vapor wt. frac.
Naphthenic Acid		300	7.11	1563.28	247.06	8.2	50.00	0.1667	0.0566	0.0209	0.0179	0.0244	16.1181	0.4862	--	--	0.0372	16.118	0.4862
Water		18	6.93897	1326.48	214.31	8.34	50.00	2.7778	0.9434	0.3687	0.3108	0.4355	17.0329	0.5138	--	--	0.6914	17.033	0.5138
							100.0	2.94444	1.00000	0.38963	0.32868	0.45989	33.15100	1.00000	0.00000	0.00000	0.72861	33.15100	1.00000
							Total	Total	Total	Pva	Pvn	Pvx	Mv	Total	Pva	Pvn	Pvx	Mv	Total

use for worst case
T11
T12

LOAD

Constituents	TLV (mg/m3)	MW (lb/lb mole)	Antoine Constants A	B	C	Density (lb/gal)	Conc. wt %	Liquid moles	Liquid mole frac	ANNUAL Avg. Part. press.	Min. Part. press.	Max. A Part. press.	vapor wt.	vapor wt. frac.	MAXIMUM HOURLY Avg. Part. press.	Min. Part. press.	Max. A Part. press.	vapor wt.	vapor wt. frac.
Naphthenic Acid		300	7.11	1563.3	247.1	8.2	100.00	0.3333	0.3269	0.1211	0.1037	0.1409	300.0000	3.0590	--	--	0.2151	300.000	3.0590
							100	0.3333	0.3269	0.1211	0.1037	0.1409	300.0000	3.0590	0.0000	0.0000	0.2151	300.000	3.0590
							Total	Total	Total	Pva	Pvn	Pvx	Mv	Total	Pva	Pvn	Pvx	Mv	Total

Wastewater **Constituents**	TLV (mg/m3)	MW (lb/lb mole)	Antoine Constants A	B	C	Density (lb/gal)	Conc. wt %	Liquid moles	Liquid mole frac	ANNUAL Avg. Part. press.	Min. Part. press.	Max. A Part. press.	vapor wt.	vapor wt. frac.	MAXIMUM HOURLY Avg. Part. press.	Min. Part. press.	Max. A Part. press.	vapor wt.	vapor wt. frac.
Neutralization salts		50	0	9999	1	12.72	30.00	0.6000	0.1337	0.0000	0.0000	0.0000	0.0000	0.0000	--	--	0.0000	0.000	0.0000
Water		18	6.93897	1326.48	214.31	8.34	70.00	3.8889	0.8663	0.3386	0.2854	0.4000	18.0000	1.0000	--	--	0.6350	18.000	1.0000
							100.00	4.4889	1.0000	0.3386	0.2854	0.4000	18.0000	1.0000	0.0000	0.0000	0.6350	18.000	1.0000
							Total	Total	Total	Pva	Pvn	Pvx	Mv	Total	Pva	Pvn	Pvx	Mv	Total

EPAPA010000411

TCEQ FORMS

Texas Commission on Environmental Quality
Form PI-7-CERT
Certification and Registration for Permits by Rule

I. REGISTRANT INFORMATION			
A. TCEQ Customer Reference Number:	CN-	TCEQ Regulated Entity Number:	RN- 105156111
Note: If "NO," CN or RN number was entered above: please fill out the required Core Data Form, which will be available in Step II of the submittal process.			
B. Company or Other Legal Customer Name: Port Arthur Chemical & Environmental Services, LLC			
Company Official Contact Name: Matt Bowman		Title: President	
Mailing Address: 4904 Griggs Road			
City: Houston		State: Texas	Zip Code:77021
Phone No.: 713-676-1460	Fax No.: 713-676-1676	E-mail Address: mbowman@cesenviormental.com	
C. Technical Contact Name: Philip Evans		Title: Director Technical Services	
Company: The WCM Group, Inc.			
Mailing Address: PO Box 3247			
City: Humble		State: Texas	77347
Phone No.: 281-446-7070	Fax No.: 281-446-3348	E-mail Address: pevans@wcmgroup.com	
D. Facility Location Information - Street Address: 2420 Highway 87 South			
If "NO," street address, provide written driving directions to the site: (attach description if additional space is needed)			
City: Houston		County: Jefferson	Zip Code: 77640
II. FACILITY AND SITE INFORMATION			
A. Name and Type of Facility: Port Arthur Chemical & Environmental Services, LLC			☒ Permanent ☐ Portable
B. PBR claimed under **30 TAC § 106** *(List all)*:			
§ 106.261		§ 106.	
§ 106.		§ 106.	
§ 106.		§ 106.	
Are you claiming a **historical standard exemption or PBR**?			☐ YES ☒ NO
If "YES," enter effective date and Rule Number:			

Texas Commission on Environmental Quality
Form PI-7-CERT
Certification and Registration for Permits by Rule

II. FACILITY AND SITE INFORMATION ***(continued)***			
C. Is there a previous Standard Exemption or PBR for the facility in this registration? (Attach details regarding changes.)			☐ YES ☒ NO
If "YES," enter Registration Number and Rule Number:			
D. Are there any **other facilities** at this **site** which are **authorized by an Air Standard Exemption or PBR**?			☐ YES ☒ NO
If "YES," enter Registration Number and Rule Number:			
E. Are there any **other air preconstruction permits** at this site?			☒ YES ☐ NO
If "YES," enter Permit Numbers:		86587	
Are there any other air preconstruction permits at this site that would be directly associated with this project?			☐ YES ☒ NO
If "YES," enter Permit Numbers:			
F. Is this facility located at a site which is required to obtain a federal operating permit pursuant to 30 TAC Chapter 122?			☐ YES ☒ NO ☐ To be determined
If the site currently has an existing federal operating permit, enter the permit number:			
Identify the requirements of 30 TAC Chapter 122 that will be triggered if this certification is accepted.			
☐ Initial Application for an FOP	☐ Significant Revision for an SOP	☐ Minor Revision for an SOP	
☐ Operational Flexibility/off Permit Notification for an SOP	☐ Revision for GOP	☐ To be Determined	☒ None
Identify the type(s) issued and/or FOP application(s) submitted/pending for the site. *(Check all that apply)*			
☐ SOP	☐ GOP	☐ GOP application/revision application: Submitted or under APD review.	
☐ SOP application/revision application: submitted or under APD review.		☐ N/A	
G. TCEQ Account Identification Number *(if known)*:			
III. FEE INFORMATION			
To determine if a fee is required answer the following question. If "YES," to question III. A., a fee is not required, skip to Section IV. If "NO," to answer II. A., then go to Section III. B. See Section VI. for address to send fee or go to www.2.tceq.state.tx.us/epay to pay online.			
A. Is this registration an update to a previously registered facility and accompanied by a Certification Form solely to establish a federally enforceable emission limit?			☐ YES ☒ NO
B. What is the fee amount?			

Texas Commission on Environmental Quality
Form PI-7-CERT
Certification and Registration for Permits by Rule

III. FEE INFORMATION *(continued)*			
*If "YES," to any of the following three questions, a **$100** fee is require. Otherwise, a **$450** fee is required.*			
Does this business have less than 100 employees?			☒ YES ☐ NO
Does this business have less than 6 million dollars in annual gross receipts?			☐ YES ☒ NO
Is this registration submitted by a governmental entity with a population of less than 10,000?			☐ YES ☒ NO
C. Check/Money Order or Transaction Number *(Payable to TCEQ)*:	☐ YES ☒ NO	*Was fee **Paid** online?*	☐ YES ☒ NO
Company name of check: The WCM Group Inc.		Fee amount:	$ 100

IV. SELECTED FACILITY REVIEWS ONLY—TECHNICAL INFORMATION		
Note: If claiming one of the following PBRs, complete this section, then skip to Section VI., "Submitting your registration" below:		
Animal Feeding Operations § 106.161, Livestock Auction Facilities § 106.162, Saw Mills § 106.223, Grain Handling, Storage and Drying § 106.283, Auto Body Refinishing Facilities §106.436, and Air Curtain Incinerator § 106.496		
A. Is the applicable PBR checklist attached which shows the facility meets all general and specific requirements of the PBR(s) being claimed? *(If submitting electronically, click "YES.")*		☐ YES ☐ NO
B. Distance from this facility's emission release point to the nearest property line:		feet
Distance from this facility's emission release point to the nearest off-property structure:		feet

V. TECHNICAL INFORMATION INCLUDING STATE AND FEDERAL REGULATORY REQUIREMENTS ***Registrants must be in compliance with all applicable state and federal regulations and standards to claim a PBR.***	
A. Is confidential information submitted and properly marked "**CONFIDENTIAL**" with this registration?	☐ YES ☒ NO
B. Is a process flow diagram or a process description attached?	☒ YES ☐ NO
C. Are emissions data and calculations for this claim attached?	☒ YES ☐ NO
D. Is information attached showing how the **general** requirements (**30 TAC § 106.4**) of the PBR is met for this Registration? (**PBR checklists** may be used, but are optional)	☒ YES ☐ NO
*Note: Please be reminded that if the facilities listed in this registration are subject to the Mass Emissions Cap & Trade program under **30 TAC Chapter 101, Subchapter H, Division 3**, the owner/operator of these facilities must possess NO_X allowances equivalent to the actual NO_X emissions from these facilities.*	
E. Is information attached showing how the **specific PBR** requirements are met for this registration? (***PBR checklist** may be used, but are optional*)	☒ YES ☐ NO
F. Distance from this facility's emission release point to the nearest property line:	200 feet
Distance from this facility's emission release point to the nearest off-property structure:	250 feet
Note: In limited cases, a map or drawing of the site and surrounding land use may be requested during the technical review or at the request of the TCEQ Regional Office or local air pollution control program during an investigation.	

Texas Commission on Environmental Quality
Form PI-7-CERT
Certification and Registration for Permits by Rule

VI. SIGNATURE FOR CERTIFICATION AND REGISTRATION

The signature below indicates that the Responsible Official has knowledge of the facts herein set forth and that the same are true, accurate, and complete to the best of my knowledge and belief. By this signature, the maximum emission rates listed on this certification reflect the maximum anticipated emissions due to the operation of this facility and all representations in this certification of emissions are conditions upon which the facilities and sources will operate. It is understood that it is unlawful to vary from these representations unless the certification is first revised. The signature certifies that to the best of the Responsible Official's knowledge and belief, the project will satisfy the conditions and limitations of the indicated exemption or permit by rule and the facility will operated in compliance with all regulations of the Texas Commission on Environmental Quality and with Federal U.S. Environmental Protection Agency regulations governing air pollution. The signature below certifies that, based on information and belief formed after reasonable inquiry, the statements and information above and contained in the attached document(s) are true, accurate, and complete. **If you questions on how to fill out this form or about air quality permits. Please call 512/239-1250.** *Individuals are entitled to request and review their personal information that the agency gathers on its forms. They may also have any errors in their information corrected. To review such information, call 512/239-3282.*

SIGNATURE: _____ *(ORIGINAL SIGNATURE REQUIRED)*	DATE:

VII. SUBMITTING COPIES OF THE CERTIFICATION AND REGISTRATION

Copies must be sent as listed below:
Processing delays may occur if copies are not sent as noted.

Who	*Where*	*What*
Air Permits Initial Review Team (APIRT)	Regular, Certified, Priority Mail MC161, P.O. Box 13087 Austin, Texas 78711-3087 Hand Delivery, Overnight Mail MC 161, 12100 Park 35 Circle, Building C, Third Floor Austin, Texas 78753 Fax No.: (512) 239-2123 *(do not follow fax with paper copies)*	Originals Form PI-7, Core Data Form. and all attachments
Revenue Section, TCEQ	Regular, Certified, Priority Mail MC 214, P.O. Box 13088 Austin, Texas 78711-3088 Hand Delivery, Overnight Mail MC 214, 12100 Park 35 Circle, Building A, Third Floor Austin, Texas 78753	Original Money Order or Check Copy of Form PI-7 and Core Data Form
Appropriate TCEQ Regional Office	To find your Regional Office address, go to the TCEQ Web site at www.tceq.state.tx.us, or call (512) 239-1250.	Copy of Form PI-7, Core Data Form, and all attachments.
Appropriate Local Air Pollution Control Program(s)	To Find your local or Regional Air Pollution Control Programs go to the TCEQ, APD Website at www.tceq.state.tx.us/nav/permits/air_permits.html or call (512) 239-1250	Copy of Form PI-7, Core Data Form, and all attachments.

TEXAS COMMISSION ON ENVIRONMENTAL QUALITY
AIR PERMITS DIVISION

TITLE 30 TAC § 106.4 "QUICK-CHECK" APPLICABILITY CHECKLIST

Company Name: Port Arthur Chemical & Environmental Services, LLC
Checklist completed by: The WCM Group, Inc. Date: November 2008
Facility Type: Chemical production
Permit(s) by rule claimed: 30 TAC Chapter §106: 261
Project Description (including equipment, materials, and brief process description):

Production of Naphthenic oil from Naphthenic caustic solution.

CO	6.65	NO_X	3.33	VOC	< 0.001
PM	0.00	SO_2	0.23	Other	0.00

The following questions require a "Yes" or "No" answer to be indicated for this permit by rule claim:

A. Title 30 TAC § 106.4(a)(5): Current Permit by Rule Requirements

Yes X No☐ Have you checked to determine if this exempt project is being claimed under the current version of 30 TAC 106?
If "Yes ", continue to next question If "No ", please contact the Air Permits Division for a copy of the current permit by rule to be claimed.

B. Title 30 TAC § 106.4(a)(7): Permit by rule prohibition check

Yes☐ No X Are there any air permits under the same account containing permit conditions which prohibit or restrict the use of permits by rule?
If "No ", continue to next question
If "Yes ", permits by rule may not be used or their use must meet the restrictions of the permit.
A new permit or permit amendment may be required.
List permit number(s): _____

C. Title 30 TAC § 106.4(b): Circumvention check

Title 30TAC§ 106.4(b) states "No person shall circumvent by artificial limitations the requirements of§l 16.110 of this title (covering permitting)." Circumvention by artificial limitations may include but is not limited to:

A. dividing a complete project into separate segments to circumvent §106.4(a)(1) limits;
B. claiming feed or production rates below the physical capacity of the project's equipment in order to begin constructing facilities before a permit or permit amendment is approved for full scale operations, particularly when the unit will not be economically viable at less than permitted capacity;
C. claiming a limited chemical list in order to begin constructing facilities before a permit or permit amendment is approved for additional chemicals, particularly when the unit will not be economically viable until the additional chemicals are authorized.

Yes☐ No X Does your project meet any of the criteria listed above?
If "No ", continue to next rule question If "Yes ", a permit y rule may not be claimed.

D. Title 30 TAC § 106.4(c) and (d): Compliance with all Rules

Yes X No☐ Will the facility comply with all rules and regulations of the TCEQ, the intent of the Texas Clean Air Act, and any local permitting or registration requirements? *If "Yes ", continue to next rule question If "No ", a permit by rule may not be claimed.*

E. Title 30 TAC § 106.4(a)(l): Emission limits check

Yes X No☐ The maximum emissions from all facilities at the site, including this permit by rule claim, are less than 25 tpy of any contaminant.
If the answer to this questions is "Yes ", no further review is needed to complete this checklist. Forward all information needed to verify your permit by rule claim to the . If "No ", this checklist cannot be used. Please complete the standard 30 TAC § 106.4 Applicability Checklist.

Title 30 Texas Administrative Code § 106.261
Permit By Rule (PBR) Checklist
Facilities (Emission Limitations)

Electronic Submittal - Only enter the PI-7 confirmation number here if submitting electronically.
Hard-Copy Submittal - Print and complete the following checklist.

The following checklist is designed to help you confirm that you meet Title 30 Texas Administrative Code § 106.261 (30 TAC § 106.261) requirements. If you do not meet all the requirements, you may alter the project design or operation in such a way that all the requirements of the PBR are met or you may obtain a construction permit. The PBR forms, tables, checklists and guidance documents are available from the Texas Commission on Environmental Quality (TCEQ), Air Permits Division Web site at, www.tceq.state.tx.us/nav/permits/air_permits.html.

CHECK THE MOST APPROPRIATE ANSWER	
Is a description or checklist of how this claim meets the general requirements for the use of PBRs in 30 TAC § 106.4 attached?	X YES ☐ NO ☐N/A
b1 Is this claim for construction of a facility authorized in another section of this chapter or for which a standard permit is in effect? *If "YES," this PBR cannot be used to authorize emissions from the project*	☐ YES X NO ☐N/A
b2 Is this claim for any change to any facility authorized under another section of this chapter or authorized under a standard permit? *If "YES," this PBR cannot be used to authorize emissions from the project*	☐ YES X NO ☐N/A
a1 Are facilities or changes located at least 100 feet from any recreational area or residence or other structure not occupied or used solely by the owner or operator of the facilities or the owner of the property upon which the facilities are located?	X YES ☐ NO ☐N/A
a2 Are total new or increased emissions, including fugitives, less than or equal to 6.0 pounds per hour (lb/hr) and ten tons per year of the following materials (check all that apply):	☐ YES ☐ NO X N/A

☐ acetylene	☐ helium	☐ propyl ether	☐ limestone
☐ argon	☐ isohexane	☐ sulfur dioxide	☐ magnesite
☐ butane	☐ isopropyl alcohol	☐ alumina	☐ marble
☐ crude oil	☐ methyl acetylene	☐ calcium carbonate	☐ pentaerythritol
☐ carbon monoxide	☐ methyl chloroform	☐ calcium silicate	☐ plaster of paris
☐ cyclohexane	☐ methyl cyclohexane	☐ cellulose fiber	☐ silicon
☐ cyclohexene	☐ neon	☐ cement dust	☐ silicon carbide
☐ cyclopentan	☐ nonane	☐ emery dust	☐ starch
☐ ethyl acetate	☐ oxides of nitrogen	☐ glycerin mist	☐ sucrose
☐ ethanol	☐ propane	☐ gypsum	☐ zinc stearate
☐ ethyl ether	☐ propyl alcohol	☐ iron oxide dust	☐ zinc oxide
☐ ethylene	☐ propylene	☐ kaolin	

☐ refinery petroleum fractions (except for pyrolysis naphthas and pyrolysis gasoline) containing less than ten volume percent benzene
☐ fluorocarbons Numbers 11, 12, 13, 14, 21, 22, 23, 113, 114, 115, and 116

a3 Are total new or increased emissions, including fugitives, less than or equal to 1.0 lb/hr of any chemical having a limit value (L) greater than 200 milligrams per cubic meter (mg/m^3) as listed and referenced in Table 262 of 30 TAC § 106.262 of this title (relating to Facilities (Emission and Distance Limitations)? List chemical:_____ L value:_____	☐ YES ☐ NO X N/A

Are total new or increased emissions, including fugitives, less than or equal to 1.0 lb/hr of any chemical not listed or referenced in Table 262? List chemical:___Naphthenic Acid	X YES ☐ NO ☐N/A
Are total new or increased emissions, including fugitives, of a chemical with a limit value of less than 200 mg/m^3? If "Yes", the authorization of the chemical is not allowed under this section. We suggest you use 30 TAC §106.262 to authorize the emissions, if applicable.	☐ YES ☐ NO X N/A
a4 Are there any changes to or additions of any existing air pollution abatement equipment?	☐ YES X NO ☐N/A
a5 Will there be any visible emissions, except uncombined water, emitted to the atmosphere from any point or fugitive source in amounts greater than 5.0% opacity in any six-minute period?	☐ YES X NO ☐N/A
a6 Are emission increases five tons per year or greater? If "YES," this checklist must be attached to a Form PI-7 within ten days following the installation or modification of the facilities. The notification shall include a description of the project, calculations, data identifying specific chemical names, limit values, and a description of pollution control equipment, if any.	☐ YES X NO ☐N/A
a7 Are emission increases less than five tons per year? If "YES," this checklist must be attached to a Form PI-7 and include a description of the project, calculations, data identifying specific chemical names, limit values, and a description of pollution control equipment, if any. (pick one): X Within ten days following the installation or modification of the facilities. The notification shall include a description of the project, calculations, data identifying specific chemical names, limit values, and a description of pollution control equipment, if any; or ☐ By March 31 of the following year summarizing all uses of this permit by rule in the previous calendar year.	X YES ☐ NO ☐N/A

Texas Commission on Environmental Quality

Exemption §106.472 Checklist
(Previously Standard Exemption 51)

Organic Liquid Loading and Unloading

The following checklist is designed to help you confirm that you meet §106.472, previously Standard Exemption 51 (STDX 51), requirements. **Any "no" answers indicate that the claim of registration may not meet all requirements for the use of Exemption §106.472, previously Standard Exemption 51.** If you do not meet all the requirements, you may alter the project design/operation in such a way that all the requirements of the exemption are met, or obtain a construction permit.

YES	NO	NA	DESCRIPTION
X	_	_	Have you included a description of how this exemption claim meets the general rule for the use of exemptions (§106, Subchapter A checklist is available)?
X	_	_	Are all the facilities claimed for exemption specifically named in the general section of §106.472, previously STDX 51? (This exemption has been interpreted to allow mixing or blending but not chemical reaction in tankage.)
X	_	_	Is the equipment designed to prevent visible emissions?
X	_	_	Are all the chemicals to be loaded, unloaded, or stored described in §106.472, previously STDX 51(a) - (i)? Attach a list of the chemicals and identify the appropriate item of §106.472, previously STDX 51 that applies. Include additional supporting data. For example, a §106.472, previously STDX 51(i), claim should identify initial boiling points of all compounds to be covered.
_	_	X	Will aqueous ammonia solutions, hydrochloric acid, or acetic acid be vented through a water scrubber?
_	_	X	Are facilities loading, unloading, or storing butyric acid, isobutyric acid, methacrylic acid, mercaptans, croton oil, 2-methyl styrene, or any other compound with an initial boiling point of 300 degrees F or greater listed in 40 CFR 261, Appendix VIII, located at least 500 feet from any recreational area or residence or other structure not occupied or used solely by the owner or operator of the facility or the owner of the property upon which the facility is located? List these compounds and show their handling location on an attached scaled plot plan.

AREA MAP

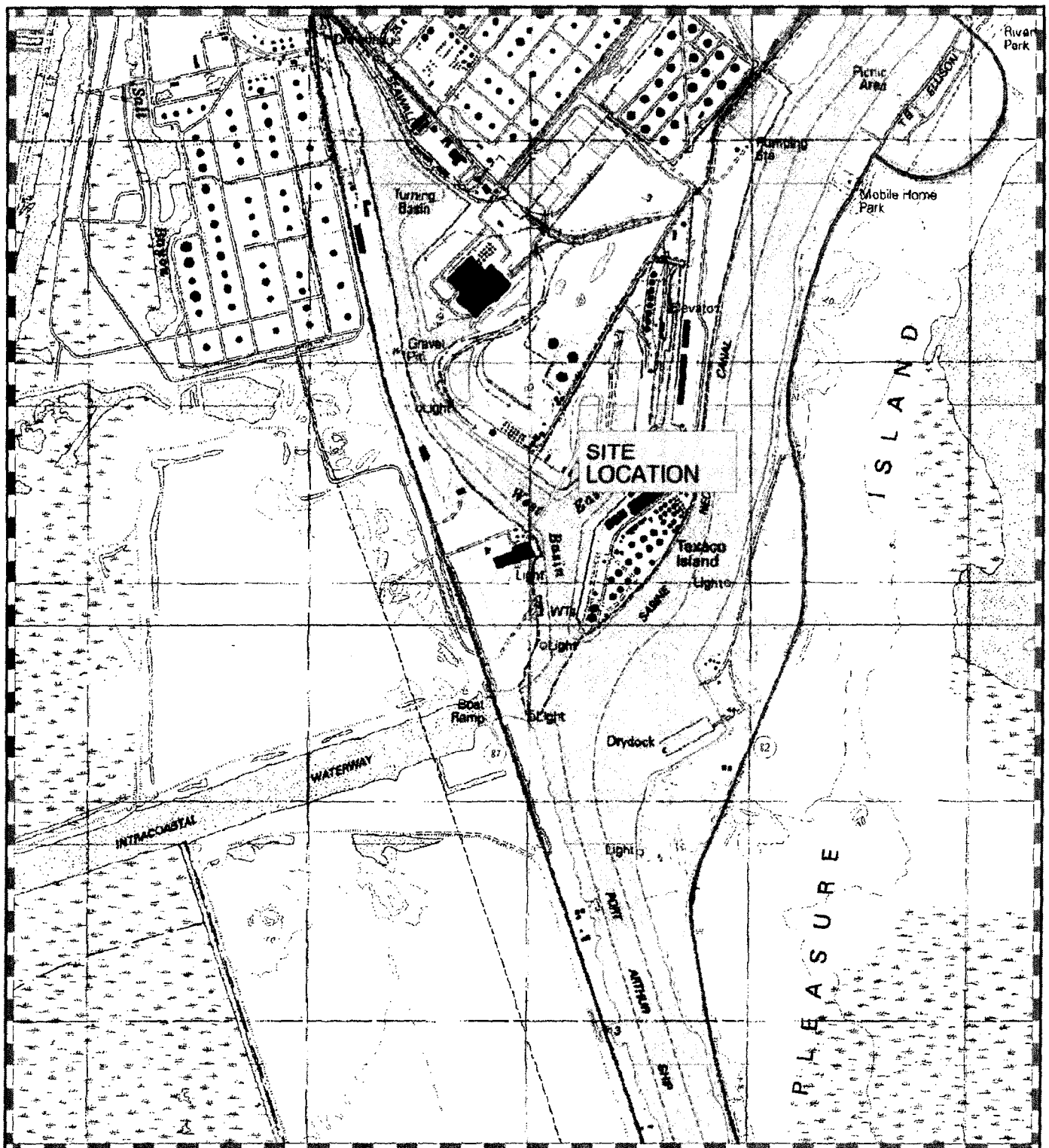

1320 0 1320
1:24,000 1" = 2000 feet feet

AREA MAP

PORT ARTHUR CHEMICAL AND ENVIRONMENTAL SERVICES, LLC

2420 HIGHWAY 87 SOUTH

PORT ARTHUR, JEFFERSON COUNTY, TEXAS

North

FIGURE

1

Reproduced from 7.5' U.S.G.S. Topographic Quadrangle: Port Arthur South, Texas; Zone 15

DRAWN BY: LLS DATE: 11-11-2008

FILE: H:-client-CES-Pt Arthur-PT ART Topo.geo

FACILITY SITE PLAN

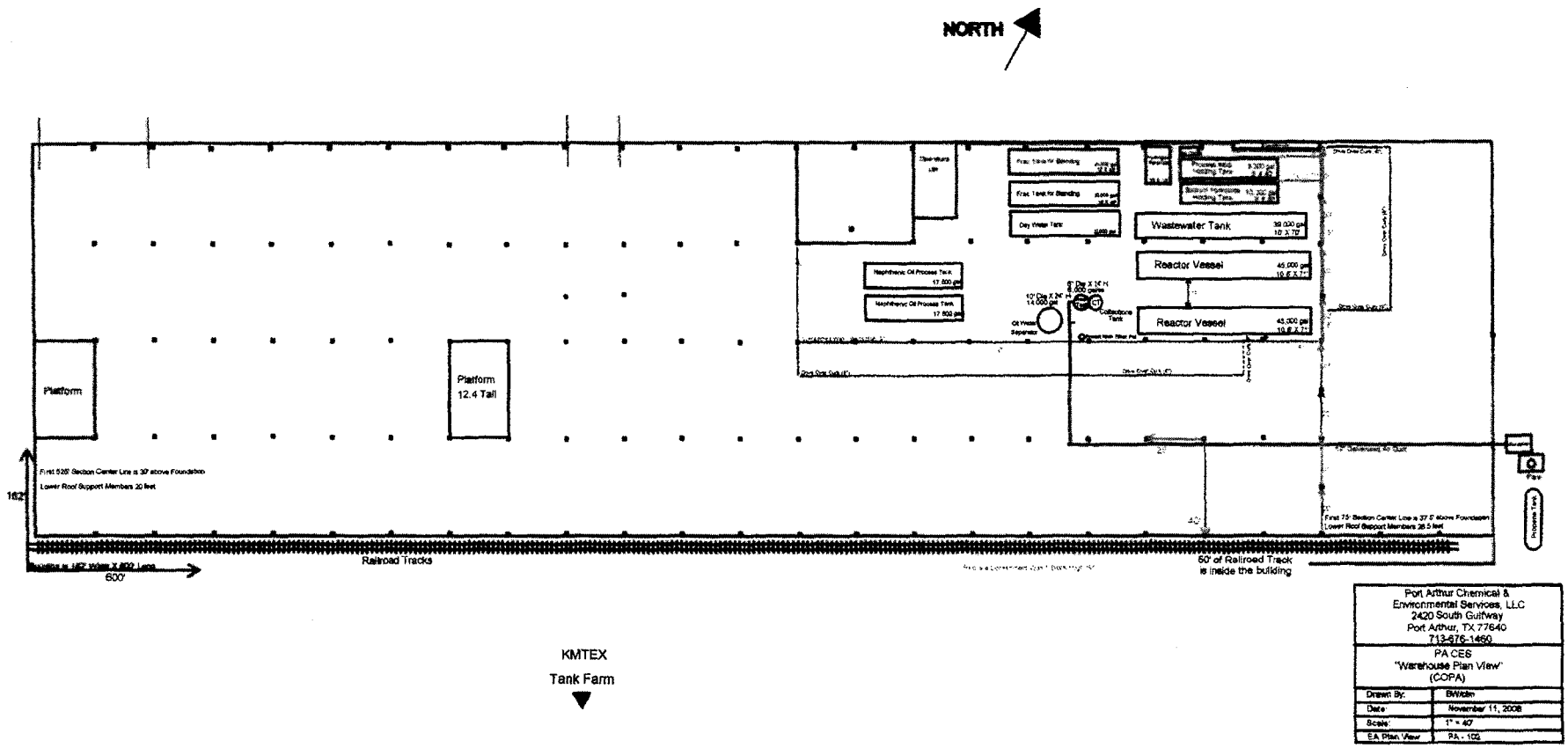

Port Arthur Chemical & Environmental Services, LLC 2420 South Gulfway Port Arthur, TX 77640 713-376-1450	
PA CES "Warehouse Plan View" (COPA)	
Drawn By:	BWolin
Date:	November 11, 2008
Scale:	1" = 40'
EA Plan View	PA - 100

EPAPA010000424

PROCESS FLOW DIAGRAM

Port Arthur Chemical & Environmental Services, LLC
Naphthenic Acid Process Flow

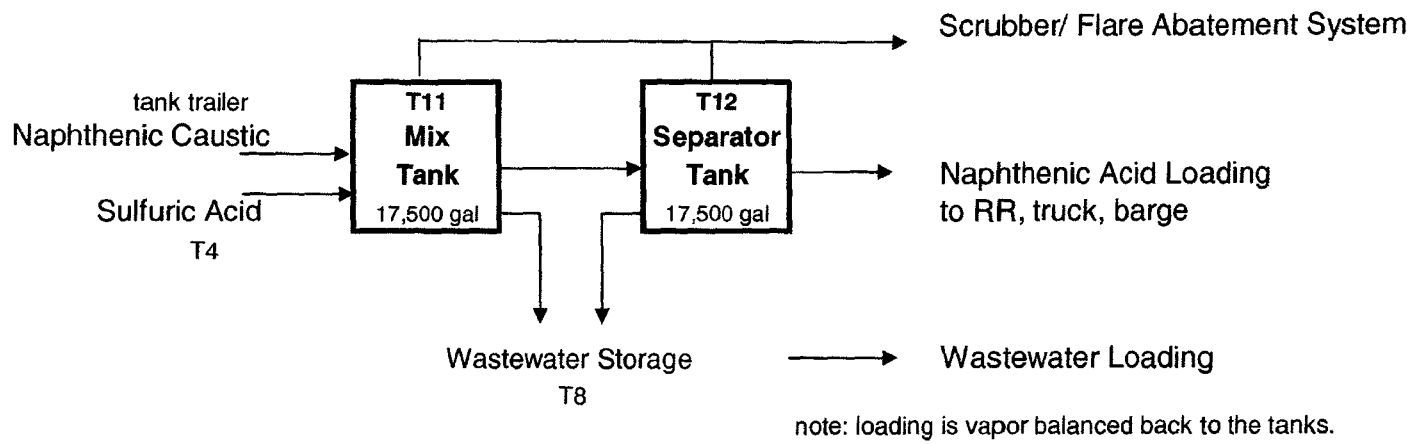

ATTACHMENT B

MATERIAL SAFETY DATA SHEETS

Flare Logs

FLARE REPORT

Daily Log for: Sep-08

DATE	OPERATOR/SHIFT	FLAME COLOR	SMOKE?	COMMENTS
9/1/2008				
9/2/2008				
9/3/2008				
9/4/2008				
9/5/2008				
9/6/2008				
9/7/2008				
9/8/2008				
9/9/2008				
9/10/2008				
9/11/2008				
9/12/2008				
9/13/2008				
9/14/2008				
9/15/2008				
9/16/2008				
9/17/2008				
9/18/2008				
9/19/2008				
9/20/2008				
9/21/2008				
9/22/2008	Brian	OK	NO	All is OK.
9/23/2008	Brian	OK	NO	good
9/24/2008	BO	OK	NO	Flare working good
9/25/2008	mike	~~N/A~~ OK	NO	good color
9/26/2008	Down	N/A	N/A	
9/27/2008	OFF			
9/28/2008	OFF			
9/29/2008	BO	Clear	NO	
W 9/30/2008	BO	Clear	NO	all is well

FLARE REPORT

Daily Log for: Oct-08

DATE	OPERATOR/SHIFT	FLAME COLOR	SMOKE?	COMMENTS
10/1/2008	Chris	Orange	minor	Flare smoking just a little. working on Blower.
10/2/2008	Chris	orange/clear	No	all is well
10/3/2008	Bo	Clear	No	ok
10/4/2008	Dennis	clear	No	ok
10/5/2008	Down			
10/6/2008	OFF			
T 10/7/2008	Mike	Clear	No	ok
10/8/2008	Bo	Slightly orange	No	
10/9/2008				
10/10/2008	Down Bo			
10/11/2008	Down			
10/12/2008	Down			
10/13/2008	Chris	good & clear.	No	ok
10/14/2008	Chris	good	No	all is ok
10/15/2008	Chris	good	No	ok
10/16/2008	Chris	good	No	ok
10/17/2008	Bo	good	No	ok
10/18/2008	Bo	good	No	ok
10/19/2008	Down	N/A	N/A	
10/20/2008	Down	N/A	N/A	
10/21/2008	Mike	good	No	ok
10/22/2008	Down	N/A		
10/23/2008	Down	N/A		
10/24/2008	Down	N/A		
10/25/2008	Bo	good	No	Cleaning ~~FAKS~~ TANKS
10/26/2008	Down			
10/27/2008	Chris	ok	No	Having to keep eye on Blower.
10/28/2008	~~Orang~~ Bo	orange	yes	Having trouble keeping Flare from smoking — Blower is Down Repair
10/29/2008				
10/30/2008				
10/31/2008				

EPAPA010000130

FLARE REPORT

Daily Log for: Nov-08

DATE	OPERATOR/SHIFT	FLAME COLOR	SMOKE?	COMMENTS
11/1/2008	Down			
11/2/2008	OFF			
11/3/2008	BO	ORange	No	OK
11/4/2008	BO / DAYS	ORange	~~SLIGHT~~ NO	TRing TO GET IT BETTER / Rental FLARE
11/5/2008	BO	ORange	~~SLIGHT~~ NO	
11/6/2008	BO	ORange	~~SLIGHT~~ NO	
11/7/2008	Down			
11/8/2008	Down			
11/9/2008	OFF			
11/10/2008	Down			Maint
11/11/2008	Down			maint
11/12/2008	Down			maint
11/13/2008	Down			maint
11/14/2008	Down			maint
11/15/2008	Down			maint
11/16/2008	OFF			
11/17/2008	Down			Finishing maint.
11/18/2008	BO	ORange	~~SLIGHT~~ NO	Adjusting AIR FLOW.
11/19/2008	Down			WAiting on OK TO Process
11/20/2008	Down			
11/21/2008	Down			
11/22/2008	Down			
11/23/2008	Down			
11/24/2008	Down			
11/25/2008	Down			
11/26/2008	BO	BLUE	No	NEW FLARE OPERATIONAL
11/27/2008	BO	BLUE	No	working well
11/28/2008	BO	BLUE	No	All is Fine
11/29/2008	BO	BLUE	NO	FLARE is OK
11/30/2008	OFF			

EPAPA010000431

FLARE REPORT

Daily Log for: Dec-08

TIME	DATE	OPERATOR/SHIFT	FLAME COLOR	SMOKE?	COMMENTS
7:30 A.m.	12/1/2008	BO	Clear / Blue	NO	Cell is Fine
8:05	12/2/2008	BRIAN	BLUE	NO	Working good
	12/3/2008				
	12/4/2008				
	12/5/2008				
	12/6/2008				
	12/7/2008				
	12/8/2008				
	12/9/2008				
	12/10/2008				
	12/11/2008				
	12/12/2008				
	12/13/2008				
	12/14/2008				
	12/15/2008				
	12/16/2008				
	12/17/2008				
	12/18/2008				
	12/19/2008				
	12/20/2008				
	12/21/2008				
	12/22/2008				
	12/23/2008				
	12/24/2008				
	12/25/2008				
	12/26/2008				
	12/27/2008				
	12/28/2008				
	12/29/2008				
	12/30/2008				
	12/31/2008				

SHIFT REPORT

11/4/08 STARTED

Date: 11/6/08

Batch number 1

Shift: Days/ Evenings/Nights

Load description:

5 loads 606 1 load S1B

Operator: BRIAN

5.0 ph at start of shift

35 Nash titration at start of shift(% spent)

67 SULFIDITY Calculated

(SCRUBBER - after Run (was loaded w/ 130 on 75 NaOH)

93% spent will pull out and PUT INTO 208

(WILL NEED to check Acid Pump ASAP)

(Please be very descriptive in the notes section to include any unusual results, delays, temperatures, pressures etc. This empirical data will help us establish protocols and parameters).

NOTES: LAST NIGHT DENNIS Completed adding Acid to load / Approx. 2400 GALLONS Canada Acid
Nash was Changed out during RUN. PUT in @ 32% Caustic. / SCRUBBER
Was Changed yesterday and blower was changed yesterday.
titration @ 5 pm showed .049 SULFIDES - ADDED 550 gal. 35% Peroxide
Nash tank was 150° this morning. SCRUBBER/Flare operating normal / ACID Pump PLUGGED Partially
BO's TITRATION - 0 SULFIDES - WILL transfer to wastewater and Brian's titration
number 150= STEVE RAN TITRATION and came up with MERCAP. only. we will
Run Final TITRATION on TRUCKS THAT we LOAD TO SHIP TO New PARK. NEED to CALL Ryan to set
Computer up so that we can PRINT Titration

Is load complete? Y / N if yes Managers' final titration and signature required!

Final Titration: Sulfidity:_____ / Caustic: _____ Signature_____ Date:_____

Bo called miles ROOT about RESULTS OF TITRATION we BOTH agreed IT WAS merc. not H_2S.
STEVE RAN TITRATI

EPAPA010000433

From:
Mallin

PORT ARTHUR CHEMICAL AND ENVIRONMENTAL SERVICES, LLC
Flare Combustion Calculation

Smoking Flare Event

Event Duration 3 hours

Reduced Flare Efficiency: 93 % (insufficient combustion air)

Pilot and Supplemental Fuel: Propane
Fuel Heating Value: 2315.9 Btu/scf
Fuel Specific Volume: 8.606 cf gas/lb

COMBUSTION

	vent gas	pilot gas	supplemental gas
heat	0	2315.9	2315.9 Btu/scf
flow	0	20	2360 scfh
mass loading	0	2	274 lb/hr

Unburned fuel = mass loading x (1-(flare efficiency / 100))

= 276.55 lb/hr x (1 - (93 / 100))

= 19.36 lb/hr Propane from flare

= **58.08 lb/event duration Propane**

	Factor lb/MMBtu	NOx lb/hr	**NOx lb/event duration**	Factor lb/MMBtu	CO lb/hr	**CO lb/event duration**
Vent Gas	0.1380	0.000	0.000	0.2755	0.000	0.000
Pilot Gas	0.1380	0.006	0.019	0.2755	0.013	0.038
Supplemental Gas	0.1380	0.754	2.263	0.2755	1.506	4.517
Total	N/A	0.761	**2.282**	N/A	1.519	**4.556**

Flare Emission Factors are based on TCEQ Technical Guidance for Chemical Sources: Flares and Vapor Oxidizers: RG-109 October 2000 for high Btu non-steam assisted flares.

Pilot Gas Sample calculation:
NOx lb/hr: (2,316 Btu/lb) * (20 lb/MMBtu) / 1000000 * (0.1380 lb/yr) = 0.006 lb/hr

RECORD OF INCIDENT/ EMISSION EVENT §101.201

Identification Information

Owner/Operator Name:	Port Arthur Chemical and Environmental Services, LLC (formerly CES Environmental Services)
Customer (CN) No.	603423427
Regulated Entity Name:	Port Arthur Chemical and Environmental Services, LLC (formerly CES Environmental Services)
Regulated Entity (RN) No.	105156111
Physical Address:	2420 Gulfway Dr. - Port Arthur
TCEQ Air Account No.	NA

Event Information

Release Location Name: (physical location where emissions to atmosphere occurred)	Sodium hydrosulfide production area; flare stack
Facility Identification (FIN): (common name and agency established number if applicable)	Flare 1
Emission Point No. (EPN): (common name and agency established emission point number if applicable)	FL1
Process Unit or Area:	Sodium hydrosulfide production area
Cause of Upset:	Smoking flare (visible emissions > 5 min). Blower malfunction during startup of the flare caused insufficient delivery of combustion air to the flare tip. As a result, the flare was unable to efficiently combust the supplemental propane fuel provided to maintain minimum Btu. There was no waste gas venting to the flare during the event as startup of the sodium hydrosulfide production operations had not yet commenced. The only flow to the flare was the supplemental propane fuel. Operators failed to shut down flare in a timely manner after repair attempts ended.
Time/Date Upset Discovered:	12:00 pm; October 28, 2008
Duration of Event: (the estimated duration of the emissions in hours/minutes)	12:00 pm to 3:30 pm
Corrective Actions to End or Minimize Emissions	Multiple attempts were made to repair the blower.

H:\CLIENT\CES\Port Arthur\Emission Event\Documentation of Emission Event Smoking Flare.doc

Reporting

Reporting Requirement	None, the amount emitted was below the RQ specified in 101.1.			
Initial Report[1]	**Time/Date**	N/A	**Submitted by**	N/A
	Agencies Notified	N/A		
Final Report[2]	**Time/Date**	N/A	**Submitted by**	N/A
	Agencies Notified	N/A		

1) If emissions are greater than the reportable quantity (RQ), an initial report must be submitted to the TCEQ Regional office and any local air pollution control agencies with jurisdiction within 24 hours of discovery of the event. A copy of the initial report should be attached to this document.

2) If information in the initial report differs from the information in this document, an updated final report must be submitted within two weeks of the end of the event. A copy of the final report can be maintained in place of this document.

Emission Information

Chemical	Reportable Quantity	Estimated Emissions	Authorized Emissions	Authorization (Permit No, PBR, etc)
Propane (C_3)	5,000 lb/24-hr	58.08 lb	—	86173
NOx	200 lb/24-hr	2.28 lb	0.7606 lb/hr (18.25 lb/24-hr)	86173
CO	5,000 lb/24-hr	4.56 lb	1.5185 lb/hr (36.44 lb/24-hr)	86173
Visible Smoke	NA	NA	NA	NA
Method of Quantification[3]	Propane (C_3) emissions were estimated based on a reduction in combustion efficiency from 99% to 93% [basis; 115.725(d)(7)]. NOx and CO emissions were estimated based on fuel flow and Btu using TCEQ emission factors. [TCEQ Guidance Document RG-109]			

3) Attach a copy of the emission calculations to this document.

Comments

H:\CLIENT\CES\Port Arthur\Emission Event\Documentation of Emission Event Smoking Flare.doc

AFFIRMATIVE DEFENSE

Upset events that are determined not to be excessive emissions events[4] are subject to an affirmative defense to all claims in enforcement actions brought for these events[5] under 30 TAC 101.222(b) if all of the following criteria are met:

Yes	No	N/A	Requirement
X			The owner or operator complies with the emission reporting and recordkeeping requirements of §101.201.
X			The unauthorized emissions were caused by a sudden, unavoidable breakdown of equipment or process, beyond the control of the owner or operator.
X			The unauthorized emissions did not stem from any activity or event that could have been foreseen and avoided or planned for, and could not have been avoided by better operation and maintenance practices or technically feasible design consistent with good engineering practices.
X			The air pollution control equipment or processes were maintained and operated in a manner consistent with good practice for minimizing emissions and reducing the number of emission events.
X			Prompt action was taken to achieve compliance once the operator knew or should have known that applicable emission limitations were being exceeded, and any necessary repairs were made as expeditiously as practicable.
	X		The amount and duration of the unauthorized emissions and any bypass of pollution control equipment were minimized and all possible steps were taken to minimize the impact of the unauthorized emissions on ambient air quality.
X			All emission monitoring systems were kept in operation if possible.
X			All owner and operator actions in response to the unauthorized emissions were documented by contemporaneous operation logs or other relevant evidence.
X			The unauthorized emissions were not part of a frequent or recurring pattern indicative of inadequate design, operation, or maintenance.
X			The percentage of a facility's total annual operating hours during which unauthorized emissions occurred was not unreasonably high.
X			The unauthorized emissions did not cause or contribute to an exceedance of the national ambient air quality standards (NAAQS), prevention of significant deterioration (PSD) increments, or to a condition of air pollution.

Additional Comments:

4) Excessive emissions events are determined by the TCEQ based on the frequency of the facility's emissions events, the causes, quantities, and impacts on human health or the environment of the emissions events, and the percentage of the facility's total annual operating hours during which emissions events occur.

5) Enforcement actions other than claims for administrative technical orders and actions for injunctive relief. This protection does not remove any obligations to comply with any other existing permit, rule, or order provisions that are applicable to an emissions event. Affirmative defense applies only to violations of state implementation plan requirements. An affirmative defense cannot apply to violations of federally promulgated performance or technology based standards.

PORT ARTHUR CHEMICAL AND ENVIRONMENTAL SERVICES, LLC
Flare Combustion Calculation

Smoking Flare Event

Event Duration 3 hours

Reduced Flare Efficiency: 93 % (insufficient combustion air)

Pilot and Supplemental Fuel: Propane
Fuel Heating Value: 2315.9 Btu/scf
Fuel Specific Volume: 8.606 cf gas/lb

COMBUSTION

	vent gas	pilot gas	supplemental gas
heat	0	2315.9	2315.9 Btu/scf
flow	0	20	2360 scfh
mass loading	0	2	274 lb/hr

Unburned fuel = mass loading x (1-(flare efficiency / 100))

= 276.55 lb/hr x (1 - (93 / 100))

= 19.36 lb/hr Propane from flare

= **58.08 lb/event duration Propane**

	Factor lb/MMBtu	NOx lb/hr	**NOx lb/event duration**	Factor lb/MMBtu	CO lb/hr	**CO lb/event duration**
Vent Gas	0.1380	0.000	0.000	0.2755	0.000	0.000
Pilot Gas	0.1380	0.006	0.019	0.2755	0.013	0.038
Supplemental Gas	0.1380	0.754	2.263	0.2755	1.506	4.517
Total	N/A	0.761	**2.282**	N/A	1.519	**4.556**

Flare Emission Factors are based on TCEQ Technical Guidance for Chemical Sources: Flares and Vapor Oxidizers: RG-109 October 2000 for high Btu non-steam assisted flares.

Pilot Gas Sample calculation:
NOx lb/hr: (2,316 Btu/lb) * (20 lb/MMBtu) / 1000000 * (0.1380 lb/yr) = 0.006 lb/hr

RECORD OF INCIDENT/ EMISSION EVENT §101.201

Identification Information

Owner/Operator Name:	Port Arthur Chemical and Environmental Services, LLC (formerly CES Environmental Services)
Customer (CN) No.	603423427
Regulated Entity Name:	Port Arthur Chemical and Environmental Services, LLC (formerly CES Environmental Services)
Regulated Entity (RN) No.	105156111
Physical Address:	2420 Gulfway Dr. - Port Arthur
TCEQ Air Account No.	NA

Event Information

Release Location Name: (physical location where emissions to atmosphere occurred)	Sodium hydrosulfide production area; flare stack
Facility Identification (FIN): (common name and agency established number if applicable)	Flare 1
Emission Point No. (EPN): (common name and agency established emission point number if applicable)	FL1
Process Unit or Area:	Sodium hydrosulfide production area
Cause of Upset:	Smoking flare (visible emissions > 5 min). Blower malfunction during startup of the flare caused insufficient delivery of combustion air to the flare tip. As a result, the flare was unable to efficiently combust the supplemental propane fuel provided to maintain minimum Btu. There was no waste gas venting to the flare during the event as startup of the sodium hydrosulfide production operations had not yet commenced. The only flow to the flare was the supplemental propane fuel. Operators failed to shut down flare in a timely manner after repair attempts ended.
Time/Date Upset Discovered:	12:00 pm; October 28, 2008
Duration of Event: (the estimated duration of the emissions in hours/minutes)	12:00 pm to 3:30 pm
Corrective Actions to End or Minimize Emissions	Multiple attempts were made to repair the blower.

C:\Documents and Settings\kreese\Local Settings\Temporary Internet Files\Content.Outlook\1VAPUBQP\Documentation of Emission Event Smoking Flare.doc

Reporting

Reporting Requirement	None, the amount emitted was below the RQ specified in 101.1.			
Initial Report[1]	**Time/Date**	N/A	**Submitted by**	N/A
	Agencies Notified	N/A		
Final Report[2]	**Time/Date**	N/A	**Submitted by**	N/A
	Agencies Notified	N/A		

1) If emissions are greater than the reportable quantity (RQ), an initial report must be submitted to the TCEQ Regional office and any local air pollution control agencies with jurisdiction within 24 hours of discovery of the event. A copy of the initial report should be attached to this document.

2) If information in the initial report differs from the information in this document, an updated final report must be submitted within two weeks of the end of the event. A copy of the final report can be maintained in place of this document.

Emission Information

Chemical	Reportable Quantity	Estimated Emissions	Authorized Emissions	Authorization (Permit No, PBR, etc)
Propane (C_3)	5,000 lb/24-hr	58.08 lb	—	86173
NOx	200 lb/24-hr	2.28 lb	0.7606 lb/hr (18.25 lb/24-hr)	86173
CO	5,000 lb/24-hr	4.56 lb	1.5185 lb/hr (36.44 lb/24-hr)	86173
Visible Smoke	NA	NA	NA	NA
Method of Quantification[3]	Propane (C_3) emissions were estimated based on a reduction in combustion efficiency from 99% to 93% [basis; 115.725(d)(7)]. NOx and CO emissions were estimated based on fuel flow and Btu using TCEQ emission factors. [TCEQ Guidance Document RG-109]			

3) Attach a copy of the emission calculations to this document.

Comments

C:\Documents and Settings\kreese\Local Settings\Temporary Internet Files\Content.Outlook\1VAPUBQP\Documentation of Emission Event Smoking Flare.doc

AFFIRMATIVE DEFENSE

Upset events that are determined not to be excessive emissions events[4] are subject to an affirmative defense to all claims in enforcement actions brought for these events[5] under 30 TAC 101.222(b) if all of the following criteria are met:

Yes	No	N/A	Requirement
X			The owner or operator complies with the emission reporting and recordkeeping requirements of §101.201.
X			The unauthorized emissions were caused by a sudden, unavoidable breakdown of equipment or process, beyond the control of the owner or operator.
X			The unauthorized emissions did not stem from any activity or event that could have been foreseen and avoided or planned for, and could not have been avoided by better operation and maintenance practices or technically feasible design consistent with good engineering practices.
X			The air pollution control equipment or processes were maintained and operated in a manner consistent with good practice for minimizing emissions and reducing the number of emission events.
X			Prompt action was taken to achieve compliance once the operator knew or should have known that applicable emission limitations were being exceeded, and any necessary repairs were made as expeditiously as practicable.
	X		The amount and duration of the unauthorized emissions and any bypass of pollution control equipment were minimized and all possible steps were taken to minimize the impact of the unauthorized emissions on ambient air quality.
X			All emission monitoring systems were kept in operation if possible.
X			All owner and operator actions in response to the unauthorized emissions were documented by contemporaneous operation logs or other relevant evidence.
X			The unauthorized emissions were not part of a frequent or recurring pattern indicative of inadequate design, operation, or maintenance.
X			The percentage of a facility's total annual operating hours during which unauthorized emissions occurred was not unreasonably high.
X			The unauthorized emissions did not cause or contribute to an exceedance of the national ambient air quality standards (NAAQS), prevention of significant deterioration (PSD) increments, or to a condition of air pollution.

Additional Comments:

4) Excessive emissions events are determined by the TCEQ based on the frequency of the facility's emissions events, the causes, quantities, and impacts on human health or the environment of the emissions events, and the percentage of the facility's total annual operating hours during which emissions events occur.

5) Enforcement actions other than claims for administrative technical orders and actions for injunctive relief. This protection does not remove any obligations to comply with any other existing permit, rule, or order provisions that are applicable to an emissions event. Affirmative defense applies only to violations of state implementation plan requirements. An affirmative defense cannot apply to violations of federally promulgated performance or technology based standards.

C:\Documents and Settings\kreese\Local Settings\Temporary Internet Files\Content.Outlook\1VAPUBQP\Documentation of Emission Event Smoking Flare.doc

H2S MON INFO

H2S Alm

EPAPA010000443

HYDROGEN SULFIDE MONITOR CALIBRATION

EPAPA010000444

Detect Services Corp.
1318 Underwood Rd Ste#101
La Porte, TX 77571
PH: 281-479-2706 FX: 2780

INVOICE

Date	Invoice #
4/28/2009	T14178

Bill To	Ship To
CES Environmental Services, Inc. 4904 Griggs Road Houston, TX 77021	CES Environmental Services, Inc. 4904 Griggs Road Houston, TX 77021

P.O. Number	Terms	Rep	Ship Date	Ship Via	Region
	Net 30	TB&MR	4/28/2009		

Qty	Item Code	Description	Rate	Amount
1	Labor, Field	Labor, Field Service Date:04-28-09 Tech:Tim Bush & Mike Ricarte	650.00	650.00
	Personal Mile	Miles x $0.46	78.20	78.20

Channels 1,2 & 4 were off due to damaged from last visit. 1,2 & 4 were replaced & powered on & responded well

Channel 3 had no response to gas due to contaminated filter cup restricting gas. flow.

Channel 5 responded good.

System fully operational with proper alarm response to GAS.

Thank you for your business. Rick Tullos

Total $728.20

REMIT PAYMENT TO: DETECT SERVICES CORPORATION
P.O. BOX 220
SOMERS, NY 10589

Toll Free 1-877-500-2706

Detect Services Corp.
1318 Underwood Rd Ste#101
La Porte, TX 77571
PH: 281-479-2706 FX: 2780

INVOICE

Date	Invoice #
2/11/2009	T13864

Bill To	Ship To
CES Environmental Services, Inc. 4904 Griggs Road Houston, TX 77021	CES Environmental Services, Inc. 4904 Griggs Road Houston, TX 77021

P.O. Number	Terms	Rep	Ship Date	Ship Via	Region
Rick Tullos/377155	Net 30	TB&MR	2/11/2009		

Qty	Item Code	Description	Rate	Amount
1	Labor, Field	Labor, Field Service Date:02-11-08 Tech:Tim Bush & Mike Ricarte	650.00	650.00
	Personal Mile	Miles x $0.46	78.20	78.20
		Note: Channels 1,2 & 4 Failed. Fluid within detection heads,causing damage to components. Requires replacement of complete detector assy. Complete test of system will be required once head has been replaced.		

Thank you for your business.	**Total**	$728.20

REMIT PAYMENT TO: DETECT SERVICES CORPORATION
P.O. BOX 220
SOMERS, NY 10589

Toll Free 1-877-500-2706

Detect Services Corp.
1318 Underwood Rd Ste#101
La Porte, TX 77571
PH: 281-479-2706 FX: 2780

INVOICE

Date	Invoice #
4/28/2009	T14178

Bill To	Ship To
CES Environmental Services, Inc. 4904 Griggs Road Houston, TX 77021	CES Environmental Services 2420 Gulway Drive Port Arthur, TX 77640

P.O. Number	Terms	Rep	Ship Date	Ship Via	Region
Rick Tullos	Net 30	TB&MR	4/28/2009		

Qty	Item Code	Description	Rate	Amount
1	Labor, Field	Labor, Field Service Date:04-28-09 Tech:Tim Bush & Mike Ricarte	650.00	650.00
	Personal Mile	Miles x $0.46	78.20	78.20
		Note: Channels 1,2 & 4 were off due to damage from last visit. 1,2 & 4 were replaced, powered on & responded well. Channel 3 had no response to gas, due to contaminated filter cap restricting flow. Channel 5 responded good. System fully operational with proper alarm response to gas.		

Thank you for your business.

Total $728.20

REMIT PAYMENT TO: DETECT SERVICES CORPORATION
P.O. BOX 220
SOMERS, NY 10589

Toll Free 1-877-500-2706

Detect Services Corporation
Gas Detection Specialists
Phone (281) 479-2706 * Fax (281) 479-2780
1318 Underwood Rd Suite 101
LaPorte, Texas 77571

CALIBRATION AND TEST REPORT

Job # T14178

Customer: CES ENVIRONMENTAL SERVICES
Address: 2420 GULWAY DRIVE
City: PORT ARTHUR State: TX 77640

MFG.	Model	Controller Serial #	Channel Card Serial #	Head Location	Gas Type	Zero Reading	Span Reading	Results
RKI	BEACON 800		CH. 1 B8-087004-1	CH. 1	H2S	0 PPM	25 PPM	OK
			CH. 2 B8-087004-2	CH. 2	H2S	0 PPM	25 PPM	OK
			CH. 3 B8-087004-4	CH. 3	H2S	0 PPM	25 PPM	OK
			CH. 4 B8-087004-3	CH. 4	H2S	0 PPM	25 PPM	OK
			CH. 5 B8-087004-5	CH. 5	H2S	0 PPM	25 PPM	OK

Pre-Calibration Test Response

Instrument S/N	Toxic-H2S Zero	Toxic-H2S Span	Results
CH. 1 B8-087004-1	0 PPM	18PPM	OFF/Powered on & Tested
CH. 2 B8-087004-2	0 PPM	20 PPM	OFF/Powered on & Tested
CH. 3 B8-087004-4	0 PPM	No Response	No response due to contaminated filter cap restricting gas.
CH. 4 B8-087004-3	0 PPM	25 PPM	OFF/Powered on & Tested
CH. 5 B8-087004-5	0 PPM	25 PPM	PASS

The instruments listed above were tested and calibrated to meet manufacturer performance specifications. The gases used were specialty gas mixtures, which are N.I.S.T. traceable and certified by manufacturer to be accurate to plus or minus 2% of the minor component.

Gas	Concentration	Lot Number
O2 OXYGEN	20.9%	AMBIENT
H2S HYDROGEN SULFIDE	25 PPM	107282-16

Technician: TIM \ MIKE
Date: April 28, 2009

Detect Services Corp.
1318 Underwood Rd Ste#101
La Porte, TX 77571
PH: 281-479-2706 FX: 2780

INVOICE

Date	Invoice #
2/11/2009	T13864

Bill To	Ship To
CES Environmental Services, Inc. 4904 Griggs Road Houston, TX 77021	CES Environmental Services, Inc. 4904 Griggs Road Houston, TX 77021

P.O. Number	Terms	Rep	Ship Date	Ship Via	Region
Rick Tullos/377155	Net 30	TB&MR	2/11/2009		

Qty	Item Code	Description	Rate	Amount
1	Labor, Field	Labor, Field Service Date:02-11-08 Tech:Tim Bush & Mike Ricarte	650.00	650.00
	Personal Mile	Miles x $0.46	78.20	78.20
		Note: Channels 1,2 & 4 Failed. Fluid within detection heads,causing damage to components. Requires replacement of complete detector assy. Complete test of system will be required once head has been replaced.		

Thank you for your business.	**Total**	$728.20

REMIT PAYMENT TO: DETECT SERVICES CORPORATION
P.O. BOX 220
SOMERS, NY 10589

Toll Free 1-877-500-2706

Invoice from Detect Services Corporation

Detect Services Corporation [kimdetect@aol.com]

Sent: Monday, April 13, 2009 9:28 AM

To: Rick Tullos

Attachments: Inv_T13864_from_Detect_Serv.pdf (77 KB)

Rick,

The attached invoice is past due. Can you please check the status on it.

Thank you for your business - we appreciate it very much.

Regards,
Kim Smith
kimdetect@aol.com
Detect Services Corporation

To view your invoice
Open the attached PDF file. You must have Acrobat® Reader®<http://www.adobe.com/products/acrobat/readstep2.html> installed to view the attachment.

Rick's copy

Purchase Order Request Form

P.O. Number: 37549

Date: 07/14/08

Vendor: DETECT SERVICES

Contact: Tim Bush

Phone: 281-479-2706

Item #	Description	Quantity	Cost
1	SIB CONTROLLER W/ TRANSMITTERS (5)	Est.	$5,000.00
	P/N 22-2408RK		
	P/N 64-2422RK-05		
	Delivery 1-2 wk's		

Submitted By: Rick Tullos

Approved By: Max Bowman

For Office Use Only

Internal Expense:
- ____ CS
- ____ FS
- ____ Trans
- ____ SGA
- ____ MRI
- ____ DRM
- ____ DSP

Job Expense:

What Job? P.A.G. Port Arthur Site

___ Give Vendor Re-Sale Certificate

___ Vendor to Charge Sales Tax

EPAPA010000451

Detect Services Corp

1318 Underwood Rd Suite 101
Laporte, Texas 77571-9471
Ph:281-479-2706 Fax: 281-479-2780

Invoice No.

Quotation

Customer

Name	CES Environmental / Attn: Ryck
Address	4904 Griggs Road
City	Houston State TX ZIP 77021
Phone	713-676-1676

Date	7/14/2008
Quote #	
Rep	Kim Smith
FOB	MFG

Qty	Description	Unit Price	TOTAL
1	**P/N- 72-2108RK** RKI, Beacon 800- 8 channel controller(no sensor)	$1,995.00	$1,995.00
5	**P/N- 64-2422RK-05** RKI, S- series transmitter, w/ explosion proof Jbox CSA H2S	$595.00	$2,975.00
	Delivery 1-2 wks		
	Shipping & Handling not included		
		SubTotal	$4,970.00
		Shipping & Handling	
		Taxes	
		TOTAL	$4,970.00

Payment Details

- ○ Purchase Order
- ○ Check
- ○ Credit Card

Name
CC #
Expires

Office Use Only

ADD TAX TO QUOTE OR PROVIDE TAX EXEMPT CERTIFICATE Quote good for 30 (Thirty) days from herein

Thanks for the opportunity to earn your business!

Tim Bush 281-479-2706

FO13-0702

8 CHANNEL WALL MOUNT CONTROLLER

Gas Detection For Life

Beacon™ 800 Model

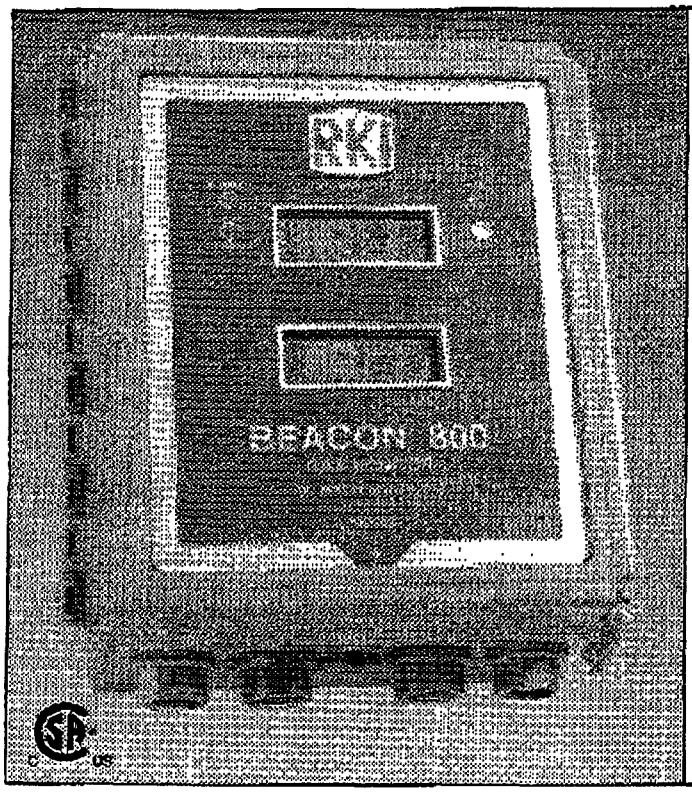

Features

- Capable of up to 8 separate channels
- Digital display of all 8 channels simultaneously
- Compact, weatherproof, NEMA 4X enclosure
- 85 to 264 VAC or 24 VDC operation
- Long life sensors (2+ years typical)
- Accepts any 4-20 mA transmitter
- Audible alarm with reset button
- Two programmable alarm levels per channel
- Common alarm and fail relays
- Relay rating 3 amps, form C
- Low cost versatile solution

Industry Applications

- Petrochemical plants
- Refineries
- Water & wastewater treatment plants
- Pulp & paper mills
- Gas, telephone, & electric utilities
- Parking garages
- Manufacturing facilities
- Steel
- Automotive
- HVAC

Gas detection should not be complicated. The Beacon™ 800 is gas detection simplified.

The Beacon™ 800 is a versatile, low cost fixed system controller for one to eight points of gas detection. It is microprocessor controlled and is capable of accepting up to 8 separate 4-20 mA sensor transmitters which can be either 2 or 3 wire. The Beacon™ 800 can be powered by either 24 VDC, or 85-264 VAC. It is simple to operate and comes complete with a wall mount installation kit.

The 2 large digital displays have backlighting and easily identify both the gas type and the gas concentration for all 8 channels simultaneously. The Beacon™ 800 is housed in a NEMA 4X rated case for a weather tight seal. This case design complies with lock out / tag out standards and can be fully secured. An external reset switch allows alarms to be silenced from outside the controller housing. The bottom mounted wiring hubs allow for easy wiring.

With 3 amp rated relays, the Beacon™ 800 can be wired directly to a variety of devices like alarm horns, buzzers, or lights. This eliminates the need for costly external relays from the controller to devices. RKI offers the industry's widest selection of standard and toxic gas detection sensors, which can be utilized with the Beacon™ 800, providing gas monitoring protection for almost any application.

16-18/2 shielded cable

RKI Instruments, Inc. · 33248 Central Ave. Union City, CA 94587 · Phone (800) 754-5183 · (510) 441-5656 · Fax (510) 441-5650
World Leader In Gas Detection Sensor Technology
www.rkiinstruments.com

Beacon™ 800 Model

Physical	
Dimensions	Height: 12.5" 318 mm Width 11.0" 279 mm Depth 6.4" 163 mm
Enclosure	Wall mounting grey fiberglass with hinged cover.
Conduit Connection	3/4" NPT conduit hubs, 4 provided for sensors, power, and relay wiring.
Wiring Termination	Screw type terminal block, 14 gauge max.
Operating Environment	
Operating Temp	14°F to 122°F (-10°C to 50°C)
Storage Temp	-4°F to 158°F (-20°C to 70°C)
Relative Humidity	0 - 100% RH
Enclosure Rating	NEMA-4X enclosure, waterproof, chemical, and weather resistant.
Inputs	
4-20 mA	Accepts any 4-20 mA transmitter (24 VDC, 2 or 3 wire). A wide variety of RKI sensors are available with 4-20 mA signals. Wiring distances up to 8,000 feet.
Outputs	
Relays	2 relays per channel 3 amp rating. SPDT isolated contacts. *1 set of common relays:* • 2 for gas alarm levels • 1 for malfunction *Relays fully programmable for:* • Increasing or decreasing alarms • Latching or self reset alarms • Normally energized or normally de-energized • Time delay for alarm on and alarm off.
24VDC	24 VDC output provided to operate sample drawing adapters.
Display	2 alphanumeric displays with backlighting. 16 characters per line; 4 lines each. All 8 channels continuously displayed.
Audible	Built-in audible alarm, 94 dB, mounted on enclosure. *Coded Output:* • pulsing = gas alarm • steady = fail
Visual	4 visual LED alarms on front cover for alarm indications, pilot, and malfunction.
Optional Expansion Cards	Individual 4-20 mA (or 1 - 5 VDC) outputs. Heavy duty relay card (4 each @ 30 amps)
Power	85-264VAC or 24VDC
Approvals	CSA Certified to CSA C22.2 No. 1010 and ANSI/ISA S82.01
Warranty	One year materials and workmanship.

Specifications subject to change without notice. Made in the USA

AS9012 ISO 9001:2000

Authorized Distributor:

Toll Free: (800) 754-5165 • Phone: (510) 441-5656
Fax: (510) 441-5650 • www.rkiinstruments.com

F015-0605

EXPLOSION PROOF GAS SENSOR/TRANSMITTER

Gas Detection For Life | "S" Series

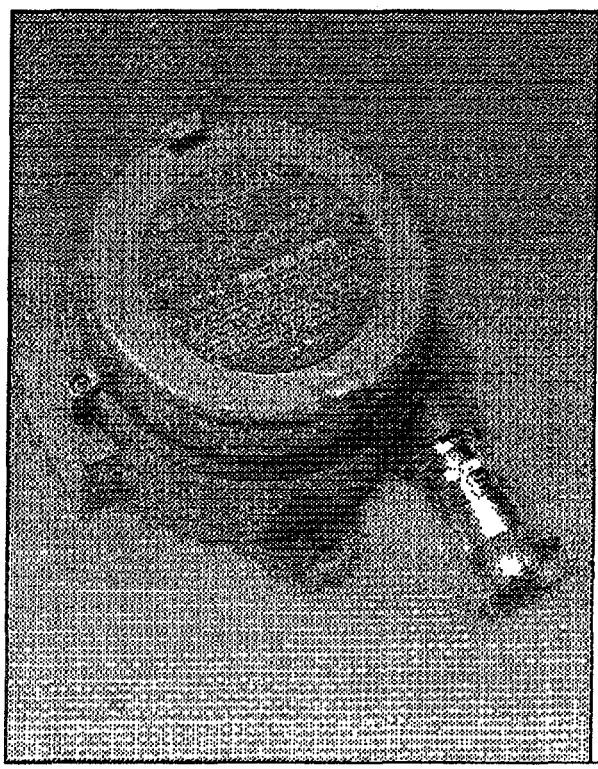

Features

- Explosion proof housing
- Patented water repellent sensor coating
- Operates independent of a controller
- Available for LEL, H2S, CO, O2, and ppm HC
- IR sensors available for LEL & CO2
- Long life sensors (2 + years typical)
- Competitively priced
- Intrinsically safe, U.L. Classified CSA

Applications

- Petrochemical Plants
- Refineries
- Gas Plants
- Offshore Drilling Platforms
- Water & wastewater treatment plants
- Pulp & paper mills
- Gas, telephone, & electric utilities
- Parking garages
- Manufacturing facilities
- Steel
- Automotive
- Chemical storage buildings

The RKI "S" series gas sensor/transmitters are highly reliable and cost effective basic 4-20 mA transmitters for detection of common gas hazards. The "S" series transmitters are available for LEL, O_2, H_2S, CO, CO2 or for 0 - 2,000 ppm Hydrocarbon detection (for various fuels or solvents). The electronics are encased inside a potted package to avoid damage from mechanical abuse or corrosion, and the amplifier is installed inside an explosion-proof enclosure. All sensors are explosion-proof with flame arrestors and approved for use in hazardous atmospheres. There is also an optional version for oxygen for use in non-hazardous atmospheres.

The only tools required to calibrate the "S" series are a voltmeter, screwdriver, and cal gas. The zero and calibration functions are performed by adjusting potentiometers on the amplifiers. The amplifier has test jacks for connecting to a voltmeter for calibration purposes, and the sensor response is viewed on the voltmeter as a 100mV to 500mV signal. Field calibration can be performed easily and quickly by one person.

The "S" series transmitters can be used either indoors or outdoors. The flame arrestors utilize a patented coating which make them water repellent, and splash guards are also available for use in very wet environments.

The transmitter operates from 24 VDC (10.5VDC to 30 VDC), and provides a 4-20mA signal which can be connected to a wide variety of controllers.

RKI Instruments, Inc. • 33248 Central Ave. Union City, CA 94587 • Phone (800) 754-5165 • (510) 441-5656 • Fax (510) 441-5650

World Leader In Gas Detection & Sensor Technology

www.rkiinstruments.com

"S" Series

	LEL	O2	H2S	CO	Infrared			HC
					CO2	CH4	HC	
Part #	65-2400RK 65-2400RK-05	65-2513RK 65-2516RK	65-2422RK-05	65-2432RK-05	65-2391RK-03	65-2390RK-CH4	65-2390RK-HC	65-2460RK 65-2460RK-05
Measuring Range	0-100% LEL	0-25% Vol.	0-100 ppm	0-300 ppm	0-5% Vol.	0-100% LEL		0-2,000 ppm
Max Current Draw	200 mA (power wires) 25 mA (signal wires) 3 or 4 wires	25 mA (2 wire system)			60 mA (power wires) 25 mA (signal wires) 3 wires			100 mA (power wires) 25 mA (signal wires) 3 wires
Outputs	4 - 20 mA signal							
Response Time	30 seconds to 90% of concentration	20 seconds to 90% of concentration	45 seconds to 90% of concentration	30 seconds to 90% of concentration				
Operating Environment								
Location	Indoor or outdoor. Explosion proof for Class I, Div. 1, Groups B, C, and D.	Indoor or outdoor. Explosion proof housing (65-2516RK) and intrinsically safe sensor (65-2513RK)	Indoor or outdoor. Explosion proof for Class I, Div. 1, Groups B, C, and D.					
Temperature	-40 to 185° F	-4 to 113° F			-4 to 122° F			30 to 120° F
Humidity	0 - 99% RH, non condensing							5 - 95% RH, non condensing
Housing	Aluminum explosion proof enclosure							
Sensors								
Type	Catalytic Combustion	Galvanic Cell	Electrochemical		Infrared			Metal Oxide Semiconductor
Life Expectancy	1 to 2 years with normal intermittent exposure to flammable gas	2 years normal service	2 years normal service when intermittently exposed to H2S	2 to 3 years normal service	5 + years normal service			5 to 10 years typical
Controls								
Zero	Sets transmitter output to 4 mA with 0% LEL output from combustible sensor	Sets transmitter output to 4 mA with an inert gas (zero) output from O2 sensor	Sets transmitter output to 4 mA with zero output from H2S sensor	Sets transmitter output to 4 mA with zero output from CO sensor	Sets transmitter output to 4 mA with zero output from CO2 sensor	Sets transmitter output to 4 mA with 0% LEL output from combustible sensor		Sets transmitter output to 4 mA with zero ppm output from sensor
Span	Sets transmitter output to 20 mA with 100% LEL output from combustible sensor	Sets transmitter output to 17.44 mA with 20.9% Vol. O2 (fresh air) output from O2 sensor	Sets transmitter output to 20 mA with 100 ppm output from H2S sensor	Sets transmitter output to 20 mA with 300 ppm output from CO sensor	Sets transmitter output to 20 mA with 5% volume output from CO2 sensor	Sets transmitter output to 20 mA with 100% LEL output from combustible sensor		Sets transmitter output to 20 mA with 2,000 ppm Hexane (typical) output from sensor
Operating Voltage	11 VDC to 30 VDC							
Approvals	65-2400RK UL 65-2400RK-05 CSA	65-2516RK CSA	CSA	CSA	UL			65-2460RK UL 65-2460RK-05 CSA
Warranty	One year materials and workmanship							

Specifications subject to change without notice. *Made in the USA*

A9612 ISO 9001:2000

Authorized Distributor:

Toll Free: (800) 754-5165 • Phone: (510) 441-5656
Fax: (510) 441-5650 • www.zeninstruments.com

ST-B Gas monitor

Riken Keiki Hydrogen Sulphide Sensor

Performance Characteristics

Nominal Range	0-50ppm
Maximum Overload	500ppm
Expected Operating Life	Two years in air at STP
Output Signal	1.70 ± 0.30 μA/ppm
Resolution at 20°C	0.1ppm
Temperature Range Continuous Intermittent	 -40 to +40°C -40 to +55°C
Pressure Range	Atmospheric ± 10%
Pressure Coefficient	No data
T_{90} Response Time	<60 seconds
Relative Humidity Range Continuous Intermittent	 15 to 90% non-condensing 0 to 99% non-condensing
Typical Baseline Range (pure air at STP)	0 to +0.3ppm equivalent
Maximum Baseline Shift (+20 to +40°C)	0.1ppm equivalent
Long Term Output Drift	<2% signal loss/month
Recommended Load Resistor	10Ω
Bias Voltage	Not required
Repeatability	1% of signal
Position Sensitivity	None
Output Linearity	Linear
Storage Life	Six months
Recommended Storage Temperature	0-20°C

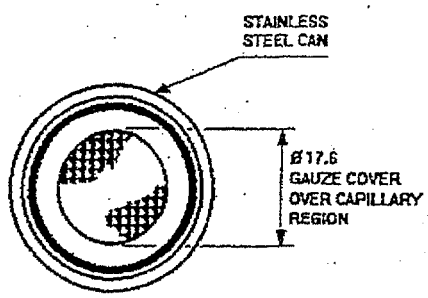

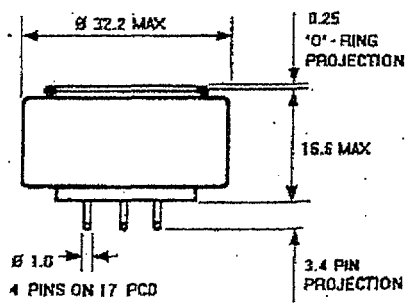

Cross-sensitivity Data									
CO	H_2S	SO_2	NO	NO_2	Cl_2	H_2	HCN	HCl	C_2H_4
8	100	≈15	<5	≈-20	<-25	2	0	0	0

Detect Services Corp.
1318 Underwood Rd Ste#101
La Porte, TX 77571
PH: 281-479-2706 FX: 2780

INVOICE

Date	Invoice #
9/3/2008	T13267

Bill To	Ship To
CES Environmental Services, Inc. 4904 Griggs Road Houston, TX 77021	CES Environmental Services, Inc. 2420 Gulfway Drive Port Arthur , TX 77640

P.O. Number	Terms	Rep	Ship Date	Ship Via	Region
375965	Net 30	TB&MR	9/3/2008		

Qty	Item Code	Description	Rate	Amount
1	Labor, Field	Labor, Field Service Date:09-03-08 Tech:Tim Bush & Mike Ricarte	650.00	650.00
	Personal Mile	Miles	78.20	78.20
		Note: Verify proper alarm activation & startup of system. Reset alarm levels to factory default & self restting. Verify proper response & operation of controller & each transmitter. System in full operation. Verify proper menu.		

Thank you for your business.

Total $728.20

REMIT PAYMENT TO: DETECT SERVICES CORPORATION
P.O. BOX 220
SOMERS, NY 10589

Toll Free 1-877-500-2706

Detect Services Corporation
Gas Detection Specialists
Phone (281) 479-2706 * Fax (281) 479-2780
1318 Underwood Rd Suite 101
LaPorte, Texas 77571

CALIBRATION AND TEST REPORT

Job # T13267

Customer: CES ENVIRONMENTAL SERVICES
Address: 2420 GULWAY DRIVE
City: PORT ARTHUR State: TX 77640

MFG.	Model	Controller Serial #	Channel Card Serial #	Head Location	Gas Type	Zero Reading	Span Reading	Results
RKI	BEACON 800							
			CH. 1 B8-087004-1	CH. 1	H2S	0 PPM	25 PPM	OK
			CH. 2 B8-087004-2	CH. 2	H2S	0 PPM	25 PPM	OK
			CH. 3 B8-087004-4	CH. 3	H2S	0 PPM	25 PPM	OK
			CH. 4 B8-087004-3	CH. 4	H2S	0 PPM	25 PPM	OK
			CH. 5 B8-087004-5	CH. 5	H2S	0 PPM	25 PPM	OK

Pre-Calibration Test Response

Instrument S/N	Toxic-H2S Zero	Toxic-H2S Span	Results
CH. 1 B8-087004-1	0 PPM	25 PPM	NEW SYSTEM \ PASS
CH. 2 B8-087004-2	0 PPM	25 PPM	NEW SYSTEM \ PASS
CH. 3 B8-087004-4	0 PPM	25 PPM	NEW SYSTEM \ PASS
CH. 4 B8-087004-3	0 PPM	25 PPM	NEW SYSTEM \ PASS
CH. 5 B8-087004-5	0 PPM	25 PPM	NEW SYSTEM \ PASS

The instruments listed above were tested and calibrated to meet manufacturer performance specifications. The gases used were specialty gas mixtures, which are N.I.S.T. traceable and certified by manufacturer to be accurate to plus or minus 2% of the minor component.

Gas	Concentration	Lot Number
O2 OXYGEN	20.9%	AMBIENT
H2S HYDROGEN SULFIDE	25 PPM	103101A-38

Technician: TIM \ MIKE
Date: SEPTEMBER 3, 2008

Re: RE : PORT ARTHUR COMPLEX

Detectservices [detectservices@aol.com]

Sent: Wednesday, February 11, 2009 8:19 AM

To: Rick Tullos

Rick,

We will take care of the service calibration this morning.

Best Regards,

Tim Bush
Detect Services Corp.
Phone: 281-479-2706

In a message dated 02/11/09 08:10:05 Central Standard Time, rtullos@cesenvironmental.com writes:

> I AM TOLD TO ASK IF IT IS POSSIBLE TO GO TODAY , LATER, OR EARLY I N THE MORNING--PLEASE LET ME KNOW OF YOUR SCHEDULE---THANKS-RICK
>
> ---
>
> **From:** Detectservices [detectservices@aol.com]
> **Sent:** Wednesday, February 11, 2009 8:03 AM
> **To:** Rick Tullos
> **Subject:** Re: RE : PORT ARTHUR COMPLEX
>
> Hi Rick,
>
> Please review the maintenance/calibration service proposal provided in the attachment and call me should you have any questions.
>
> Best Regards,
>
> Tim Bush
> Detect Services Corp.
> Phone: 281-479-2706
>
> In a message dated 02/11/09 07:29:59 Central Standard Time, rtullos@cesenvironmental.com writes:
>
> > GOOD MORNING--PLEASE CALL OR E-MAIL ME WHEN YOU GET INTO YOUR OFFICE---I WOULD LIKE FOR YOU TO QUOTE ME A PRICE FOR
> > CHECKING OUR PORT ARTHUR SYSTEM... IF POSSIBLE, LATER TODAY OR AT YOUR EARLIEST CONVIENENCE----SEND IT IN THE FORM OF
> > A STANDARD QUOTE FORM TO : ATTN. RICK TULLOS
> > CES ENVIRONMENTAL SERVICES
> > rtullos@cesenvironmental.com
> > ph. 713-676-1460--138 / 140
> > fx. 713-676-1676----713-748-8664
> > cell ph. 832-607-8553
> >
> > THANK YOU,
> > RICK TULLOS

Detect Services Corp.

1318 Underwood Road, Suite 101 La Porte, TX 77571 PH: 281-479-2706 FX: 2780

February 11, 2009

Attn: Rick Tullos

CES Environmental Services, Inc.
4904 Griggs Road
Houston, TX 77021

Dear Rick:

The below listed proposal is submitted in follow-up to my conversation with you regarding the RKI Beacon 800 fixed gas detection system with 5 points of detection for hydrogen sulfide located at 2420 Gulfway Drive, Port Arthur, Texas 77640.

The recommended calibration cycle is twice a year. Any repairs required and parts needed, will be billed in addition to the labor cost.

Services provided by Detect Services:

- Visual inspection of each gas detection monitoring point
- Verify proper operation of transmitter
  (Switch settings, Electronic and Voltage Measurements)
- Verify and establish stable zero readings
- Span each detection point with appropriate target gas
- Test alarms to insure proper setting and operation
- Calibration gases are NIST certified and traceable
- Service report listing all work performed
- Calibration certificate listing location, Serial number of unit, Lot number of gases used with concentrations, zero and span readings, calibration results, technicians name performing work.
- Calibration sticker listing date system was calibrated and next due date.

Labor cost (Per Visit): $650.00
Mileage: $78.20

Total Estimated Cost.....$728.20
(Customer will be notified two weeks prior to our scheduled visit)

This quote does not include replacement parts. This quote will be honored for 30 days, we reserve the right to resubmit this quote due to omissions, errors or manufacture price increases. Thank you for your request for this information and please call me with any questions.

Sincerely,

Tim Bush

Ph: 281-479-2706
Fax: 281-479-2780
Email: Detectservices@aol.com

OSHA FactSheet

Hydrogen Sulfide (H_2S)

Hydrogen sulfide is a colorless, flammable, extremely hazardous gas with a "rotten egg" smell. Some common names for the gas include sewer gas, stink damp, swamp gas and manure gas. It occurs naturally in crude petroleum, natural gas, and hot springs. In addition, hydrogen sulfide is produced by bacterial breakdown of organic materials and human and animal wastes (e.g., sewage). Industrial activities that can produce the gas include petroleum/natural gas drilling and refining, wastewater treatment, coke ovens, tanneries, and kraft paper mills. Hydrogen sulfide can also exist as a liquid compressed gas.

Hazardous properties of H_2S gas

Hydrogen sulfide is heavier than air and may travel along the ground. It collects in low-lying and enclosed, poorly-ventilated areas such as basements, manholes, sewer lines, underground telephone vaults and manure pits.

For work within confined spaces, use appropriate procedures for identifying hazards, monitoring and entering confined spaces.

The primary route of exposure is inhalation and the gas is rapidly absorbed by the lungs. Absorption through the skin is minimal. People can smell the "rotten egg" odor of hydrogen sulfide at low concentrations in air. However, with continuous low-level exposure, or at high concentrations, a person loses his/her ability to smell the gas even though it is still present (olfactory fatigue). This can happen very rapidly and at high concentrations, the ability to smell the gas can be lost instantaneously. Therefore, **DO NOT** rely on your sense of smell to indicate the continuing presence of hydrogen sulfide or to warn of hazardous concentrations.

In addition, hydrogen sulfide is a highly flammable gas and gas/air mixtures can be explosive. It may travel to sources of ignition and flash back. If ignited, the gas burns to produce toxic vapors and gases, such as sulfur dioxide.

Contact with liquid hydrogen sulfide causes frostbite. If clothing becomes wet with the liquid, avoid ignition sources, remove the clothing and isolate it in a safe area to allow the liquid to evaporate.

Health effects of H_2S exposure

Hydrogen sulfide is both an irritant and a chemical asphyxiant with effects on both oxygen utilization and the central nervous system. Its health effects can vary depending on the level and duration of exposure. Repeated exposure can result in health effects occurring at levels that were previously tolerated without any effect.

Low concentrations irritate the eyes, nose, throat and respiratory system (e.g., burning/tearing of eyes, cough, shortness of breath). Asthmatics may experience breathing difficulties. The effects can be delayed for several hours, or sometimes several days, when working in low-level concentrations. Repeated or prolonged exposures may cause eye inflammation, headache, fatigue, irritability, insomnia, digestive disturbances and weight loss.

Moderate concentrations can cause more severe eye and respiratory irritation (including coughing, difficulty breathing, accumulation of fluid in the lungs), headache, dizziness, nausea, vomiting, staggering and excitability.

High concentrations can cause shock, convulsions, inability to breathe, extremely rapid unconsciousness, coma and death. Effects can occur within a few breaths, and possibly a single breath.

Protection against H_2S exposure
Before entering areas where hydrogen sulfide may be present:

1. Air must be tested for the presence and concentration of hydrogen sulfide by a qualified person using air monitoring equipment, such as hydrogen sulfide detector tubes or a multi-gas meter that detects the gas.

   Testing should also determine if fire/explosion precautions are necessary.

2. If the gas is present, the space/area must be ventilated continually to remove the gas.
3. If the gas cannot be removed, the person entering the space/area must use appropriate respiratory protection and any other necessary personal protective equipment, rescue and communication equipment.

   OSHA's Confined Spaces standard contains specific requirements for identifying, monitoring and entering confined spaces.

Entering dangerous H_2S atmospheres
A level of H_2S gas at or above 100 ppm is Immediately Dangerous to Life and Health (IDLH). Entry into IDLH atmospheres can only be made using: 1) a full facepiece pressure demand self-contained breathing apparatus (SCBA) with a minimum service life of thirty minutes, or 2) a combination full facepiece pressure demand supplied-air respirator with an auxiliary self-contained air supply.

If H_2S levels are below 100 ppm, an air-purifying respirator may be used, assuming the filter cartridge/canister is appropriate for hydrogen sulfide. A full facepiece respirator will prevent eye irritation.

If air concentrations are elevated, eye irritation may become a serious issue. If a half-mask respirator is used, tight fitting goggles must also be used.

Workers in areas containing hydrogen sulfide must be monitored for signs of overexposure.

NEVER attempt a rescue in an area that may contain hydrogen sulfide without using appropriate respiratory protection and without being trained to perform such a rescue.

This is one in a series of informational fact sheets highlighting OSHA programs, policies or standards. It does not impose any new compliance requirements. For a comprehensive list of compliance requirements of OSHA standards or regulations, refer to Title 29 of the Code of Federal Regulations. This information will be made available to sensory impaired individuals upon request. The voice phone is (202) 693-1999; teletypewriter (TTY) number: (877) 889-5627.

For more complete information:

OSHA Occupational Safety and Health Administration

U.S. Department of Labor
www.osha.gov
(800) 321-OSHA

DSG 10/2005

OSHA FactSheet

Hydrogen Sulfide (H_2S)

Hydrogen sulfide is a colorless, flammable, extremely hazardous gas with a "rotten egg" smell. Some common names for the gas include sewer gas, stink damp, swamp gas and manure gas. It occurs naturally in crude petroleum, natural gas, and hot springs. In addition, hydrogen sulfide is produced by bacterial breakdown of organic materials and human and animal wastes (e.g., sewage). Industrial activities that can produce the gas include petroleum/natural gas drilling and refining, wastewater treatment, coke ovens, tanneries, and kraft paper mills. Hydrogen sulfide can also exist as a liquid compressed gas.

Hazardous properties of H_2S gas

Hydrogen sulfide is heavier than air and may travel along the ground. It collects in low-lying and enclosed, poorly-ventilated areas such as basements, manholes, sewer lines, underground telephone vaults and manure pits.

For work within confined spaces, use appropriate procedures for identifying hazards, monitoring and entering confined spaces.

The primary route of exposure is inhalation and the gas is rapidly absorbed by the lungs. Absorption through the skin is minimal. People can smell the "rotten egg" odor of hydrogen sulfide at low concentrations in air. However, with continuous low-level exposure, or at high concentrations, a person loses his/her ability to smell the gas even though it is still present (olfactory fatigue). This can happen very rapidly and at high concentrations, the ability to smell the gas can be lost instantaneously. Therefore, **DO NOT** rely on your sense of smell to indicate the continuing presence of hydrogen sulfide or to warn of hazardous concentrations.

In addition, hydrogen sulfide is a highly flammable gas and gas/air mixtures can be explosive. It may travel to sources of ignition and flash back. If ignited, the gas burns to produce toxic vapors and gases, such as sulfur dioxide.

Contact with liquid hydrogen sulfide causes frostbite. If clothing becomes wet with the liquid, avoid ignition sources, remove the clothing and isolate it in a safe area to allow the liquid to evaporate.

Health effects of H_2S exposure

Hydrogen sulfide is both an irritant and a chemical asphyxiant with effects on both oxygen utilization and the central nervous system. Its health effects can vary depending on the level and duration of exposure. Repeated exposure can result in health effects occurring at levels that were previously tolerated without any effect.

Low concentrations irritate the eyes, nose, throat and respiratory system (e.g., burning/tearing of eyes, cough, shortness of breath). Asthmatics may experience breathing difficulties. The effects can be delayed for several hours, or sometimes several days, when working in low-level concentrations. Repeated or prolonged exposures may cause eye inflammation, headache, fatigue, irritability, insomnia, digestive disturbances and weight loss.

Moderate concentrations can cause more severe eye and respiratory irritation (including coughing, difficulty breathing, accumulation of fluid in the lungs), headache, dizziness, nausea, vomiting, staggering and excitability.

High concentrations can cause shock, convulsions, inability to breathe, extremely rapid unconsciousness, coma and death. Effects can occur within a few breaths, and possibly a single breath.

Protection against H_2S exposure
Before entering areas where hydrogen sulfide may be present:

1. Air must be tested for the presence and concentration of hydrogen sulfide by a qualified person using air monitoring equipment, such as hydrogen sulfide detector tubes or a multi-gas meter that detects the gas.

   Testing should also determine if fire/explosion precautions are necessary.

2. If the gas is present, the space/area must be ventilated continually to remove the gas.
3. If the gas cannot be removed, the person entering the space/area must use appropriate respiratory protection and any other necessary personal protective equipment, rescue and communication equipment.

   OSHA's Confined Spaces standard contains specific requirements for identifying, monitoring and entering confined spaces.

Entering dangerous H_2S atmospheres
A level of H_2S gas at or above 100 ppm is Immediately Dangerous to Life and Health (IDLH). Entry into IDLH atmospheres can only be made using: 1) a full facepiece pressure demand self-contained breathing apparatus (SCBA) with a minimum service life of thirty minutes, or 2) a combination full facepiece pressure demand supplied-air respirator with an auxiliary self-contained air supply.

If H_2S levels are below 100 ppm, an air-purifying respirator may be used, assuming the filter cartridge/canister is appropriate for hydrogen sulfide. A full facepiece respirator will prevent eye irritation.

If air concentrations are elevated, eye irritation may become a serious issue. If a half-mask respirator is used, tight fitting goggles must also be used.

Workers in areas containing hydrogen sulfide must be monitored for signs of overexposure.

NEVER attempt a rescue in an area that may contain hydrogen sulfide without using appropriate respiratory protection and without being trained to perform such a rescue.

This is one in a series of informational fact sheets highlighting OSHA programs, policies or standards. It does not impose any new compliance requirements. For a comprehensive list of compliance requirements of OSHA standards or regulations, refer to Title 29 of the Code of Federal Regulations. This information will be made available to sensory impaired individuals upon request. The voice phone is (202) 693-1999; teletypewriter (TTY) number: (877) 889-5627.

For more complete information:

OSHA Occupational Safety and Health Administration

U.S. Department of Labor
www.osha.gov
(800) 321-OSHA

DSG 10/2005

BOC GASES

MATERIAL SAFETY DATA SHEET

PRODUCT NAME: HYDROGEN SULFIDE

1. Chemical Product and Company Identification

BOC Gases,
Division of
The BOC Group, Inc.
575 Mountain Avenue
Murray Hill, NJ 07974

TELEPHONE NUMBER: (908) 464-8100
24-HOUR EMERGENCY TELEPHONE NUMBER:
CHEMTREC (800) 424-9300

BOC Gases
Division of
BOC Canada Limited
5975 Falbourne Street, Unit 2
Mississauga, Ontario L5R 3W6

TELEPHONE NUMBER: (905) 501-1700
24-HOUR EMERGENCY TELEPHONE NUMBER:
(905) 501-0802
EMERGENCY RESPONSE PLAN NO: 20101

PRODUCT NAME: HYDROGEN SULFIDE
CHEMICAL NAME: Hydrogen Sulfide
COMMON NAMES/SYNONYMS: Dihydrogen Sulfide, Sulfur Hydride
TDG (Canada) CLASSIFICATION: 2.3 (2.1)
WHMIS CLASSIFICATION: A, B1, D1A, D2A, D2B

PREPARED BY: Loss Control (908)464-8100/(905)501-1700
PREPARATION DATE: 6/1/95
REVIEW DATES: 6/7/96

2. Composition, Information on Ingredients

INGREDIENT	% VOLUME	PEL-OSHA[1]	TLV-ACGIH[2]	LD_{50} or LC_{50} Route/Species
Hydrogen Sulfide FORMULA: H_2S CAS: 7783-06-4 RTECS #: MX1225000	> 99.0	20 ppm Ceiling	10 ppm TWA 15 ppm STEL	LC_{50} 444 ppm (rat)

[1] As stated in 29 CFR 1910, Subpart Z (revised July 1, 1993)
[2] As stated in the ACGIH 1994-95 Threshold Limit Values for Chemical Substances and Physical Agents

3. Hazards Identification

EMERGENCY OVERVIEW

Irritating to the eyes, mucous membranes and respiratory system. Inhaled gas inhibits cellular respiration resulting in pulmonary paralysis, sudden collapse and death. Extremely flammable.

ROUTE OF ENTRY:

Skin Contact	Skin Absorption	Eye Contact	Inhalation	Ingestion
Yes	No	Yes	Yes	Yes

HEALTH EFFECTS:

Exposure Limits	Irritant	Sensitization
Yes	Yes	No
Teratogen	Reproductive Hazard	Mutagen
Yes	Yes	No
Synergistic Effects None Reported		

Carcinogenicity: -- NTP: No IARC: No OSHA: No

EYE EFFECTS:
Low concentrations will generally cause irritation to the conjunctiva. Repeated exposure to low concentrations is reported to cause conjunctivitis, photo phobia, corneal bullae, tearing, pain and blurred vision.

SKIN EFFECTS:
May irritate the skin upon contact.

INGESTION EFFECTS:
Ingestion is unlikely. Hydrogen sulfide will irritate the mucous membranes causing a burning feeling with excess salivation likely. Irritation of the gastrointestinal tract may also occur.

INHALATION EFFECTS:
Hydrogen sulfide reacts with enzymes in the bloodstream and inhibits cellular respiration resulting in pulmonary paralysis, sudden collapse and death. Continuous exposure to low (15-50 ppm) concentrations will generally cause irritation to mucous membranes, and may also cause headache, dizziness or nausea. Higher concentrations (200-300 ppm) may result in respiratory arrest leading to coma or unconsciousness. Exposures for more than 30 minutes at concentrations greater than 700 ppm have been fatal.

Continuous inhalation of low concentrations may cause olfactory fatigue or paralysis of the sense of smell. Thus, detection of hydrogen sulfide by its odor is not effective.

MEDICAL CONDITIONS AGGRAVATED BY EXPOSURE:
Blood disorders.

NFPA HAZARD CODES

Health: 4
Flammability: 4
Reactivity: 0

HMIS HAZARD CODES

Health: 4
Flammability: 4
Reactivity: 0

RATINGS SYSTEM

0 = No Hazard
1 = Slight Hazard
2 = Moderate Hazard
3 = Serious Hazard
4 = Severe Hazard

4. First Aid Measures

EYES:
PERSONS WITH POTENTIAL EXPOSURE TO HYDROGEN SULFIDE SHOULD NOT WEAR CONTACT LENSES. Flush contaminated eyes with large amounts of water for at least 15 minutes. Part eyelids with fingers to ensure complete flushing. If irritation persists, seek medical attention immediately.

SKIN:
Flush affected area with water. If irritation persists, consult a physician.

INGESTION:
Treat in a manner similar to inhalation exposure. Seek medical attention as soon as possible.

INHALATION:
PROMPT MEDICAL ATTENTION IS MANDATORY IN ALL CASES OF OVEREXPOSURE. RESCUE PERSONNEL SHOULD BE EQUIPPED WITH SELF-CONTAINED BREATHING APPARATUS AND SHOULD RECOGNIZE THE HAZARDS OF OVEREXPOSURE DUE TO OLFACTORY FATIGUE. An extreme fire hazard exists when rescuing semiconscious or unconscious persons due to the flammability hazard. Avoid use of rescue equipment which may contain ignition sources or cause static discharge. Victims should be assisted to an uncontaminated area and inhale fresh air. Quick removal from the contaminated area is most important. If breathing has stopped administer artificial resuscitation and supplemental oxygen or a mixture of 5% carbon dioxide in oxygen. Keep victim calm and warm. Further treatment should be symptomatic and supportive. Seek medical assistance immediately.

5. Fire Fighting Measures

Conditions of Flammability: Flammable		
Flash point: Not Available	Method: Not Applicable	Autoignition Temperature: 554°F (290°C)
LEL(%): 4.0	UEL(%): 44.0	
Hazardous combustion products: Sulfur Compounds		
Sensitivity to mechanical shock: None		
Sensitivity to static discharge: None		

FIRE AND EXPLOSION HAZARDS:
Hydrogen sulfide is heavier than air and may accumulate in low areas and may travel a considerable distance to a source of ignition. Should flame be extinguished and flow of gas continue, increase ventilation to prevent flammable mixture formation in low areas or pockets. Product may explode or burn over a wide range of mixtures in air.

EXTINGUISHING MEDIA:
Water, carbon dioxide, dry chemicals.

FIRE FIGHTING INSTRUCTIONS:
If possible, stop the flow of hydrogen sulfide. Use water spray to cool surrounding containers. Fire fighters should use self-contained breathing apparatus.

6. Accidental Release Measures

Evacuate all personnel from affected area. Use appropriate protective equipment. If leak is in user's equipment, be certain to purge piping with inert gas prior to attempting repairs. If leak is in container or container valve, contact the appropriate emergency telephone number listed in Section 1 or call your closest BOC location.

7. Handling and Storage

Earth-ground and bond all lines and equipment associated with the Hydrogen Sulfide system. All electrical equipment should be non-sparking or explosion proof.

Do not rely on the olfactory sense to detect the presence of hydrogen sulfide. Analytical devices and instrumentation are readily available for this purpose. Perform frequent analytical tests to be certain that the TWA is not exceeded. Many metals corrode rapidly with wet hydrogen sulfide. Anhydrous hydrogen sulfide can be handled in carbon steel, aluminum Inconel ®, Stellite ® and 304 and 316 stainless steels. Avoid hard steels which are highly stressed since they may be susceptible to hydrogen embrittlement from hydrogen sulfide.

Use only in well-ventilated areas. Valve protection caps must remain in place unless container is secured with valve outlet piped to use point. Do not drag, slide or roll cylinders. Use a suitable hand truck for cylinder movement. Use a pressure reducing regulator when connecting cylinder to lower pressure (<750 psig) piping or systems. Do not heat cylinder by any means to increase the discharge rate of product from the cylinder. Use a check valve or trap in the discharge line to prevent hazardous back flow into the system.

Protect cylinders from physical damage. Store in cool, dry, well-ventilated area away from heavily trafficked areas and emergency exits. Do not allow the temperature where cylinders are stored to exceed 130°F (54°C). Cylinders should be stored upright and firmly secured to prevent falling or being knocked over. Full and empty cylinders should be segregated. Use a "first in-first out" inventory system to prevent full cylinders being stored for excessive periods of time. Post "NO SMOKING OR OPEN FLAMES" signs in the storage area or use area. There should be no sources of ignition in the storage or use area.

For additional storage recommendations, consult Compressed Gas Association Pamphlets P-1 and G-12.

Never carry a compressed gas cylinder or a container of a gas in cryogenic liquid form in an enclosed space such as a car trunk, van or station wagon. A leak can result in a fire, explosion, asphyxiation or a toxic exposure.

8. Exposure Controls, Personal Protection

EXPOSURE LIMITS[1]:

INGREDIENT	% VOLUME	PEL-OSHA[2]	TLV-ACGIH[3]	LD_{50} or LC_{50} Route/Species
Hydrogen Sulfide FORMULA: H_2S CAS: 7783-06-4 RTECS #: MX1225000	> 99.0	20 ppm Ceiling	10 ppm TWA 15 ppm STEL	LC_{50} 444 ppm (rat)

[1] Refer to individual state of provincial regulations, as applicable, for limits which may be more stringent than those listed here.
[2] As stated in 29 CFR 1910, Subpart Z (revised July 1, 1993)
[3] As stated in the ACGIH 1994-1995 Threshold Limit Values for Chemical Substances and Physical Agents.

ENGINEERING CONTROLS:
Hood with forced ventilation. Use local exhaust to prevent accumulation above exposure limit.

EYE/FACE PROTECTION:

Gas tight chemical goggles or full-face piece respirator.

SKIN PROTECTION:
Protective gloves: Neoprene, butyl rubber, PVC, polyethylene.

RESPIRATORY PROTECTION:
Positive pressure air line with full-face mask and escape bottle or self-contained breathing apparatus should be available for emergency use.

OTHER/GENERAL PROTECTION:
Safety shoes, safety shower, eyewash "fountain".

9. Physical and Chemical Properties

PARAMETER	VALUE	UNITS
Physical state (gas, liquid, solid)	: Vapor	
Vapor pressure	: 267 (1840 kPa)	psia
Vapor density at STP (Air = 1)	: 1.21	
Evaporation point	: Not Available	
Boiling point	: -76	°F
	: -60	°C
Freezing point	: -117.8	°F
	: -82.2	°C
pH	: Not Available	
Specific gravity	: Not Available	
Oil/water partition coefficient	: Not Available	
Solubility (H20)	: Soluble	
Odor threshold	: Not Available	
Odor and appearance	: Colorless vapor with rotten egg odor.	

10. Stability and Reactivity

STABILITY:
Stable

INCOMPATIBLE MATERIALS:
Dangerously reactive when mixed with concentrated nitric acid or other strong oxidizing agents. Vapors will ignite spontaneously when mixed with vapors of chlorine, oxygen difluoride or nitrogen trifluoride.

HAZARDOUS DECOMPOSITION PRODUCTS:
Oxides of sulfur.

HAZARDOUS POLYMERIZATION:
Will not occur.

11. Toxicological Information

REPRODUCTIVE:
Toxic effects observed in newborn rats after exposure of pregnant female to 20 ppm Hydrogen Sulfide.

12. Ecological Information

No data given.

13. Disposal Considerations

Do not attempt to dispose of residual waste or unused quantities. Return in the shipping container PROPERLY LABELED, WITH ANY VALVE OUTLET PLUGS OR CAPS SECURED AND VALVE PROTECTION CAP IN PLACE to BOC Gases or authorized distributor for proper disposal.

14. Transport Information

PARAMETER	United States DOT	Canada TDG
PROPER SHIPPING NAME:	Hydrogen Sulfide, liquefied	Hydrogen Sulfide, liquefied
HAZARD CLASS:	2.3	2.3 (2.1)
IDENTIFICATION NUMBER:	UN 1053	UN 1053
SHIPPING LABEL:	POISON GAS, FLAMMABLE GAS	POISON GAS, FLAMMABLE GAS

Additional Marking Requirement: "Inhalation Hazard"
If net weight of product ≥ 100 pounds, the container must be also marked with the letters "RQ".
Additional Shipping Paper Description Requirement: "Poison-Inhalation Hazard, Zone B"
If net weight of product ≥ 100 pounds, the shipping papers must be also marked with the letters "RQ".

15. Regulatory Information

Hydrogen sulfide is listed under the accident prevention provisions of section 112(r) of the Clean Air Act (CAA) with a threshold quantity (TQ) of 10,000 pounds.

SARA TITLE III NOTIFICATIONS AND INFORMATION
Hydrogen sulfide is listed as an extremely hazardous substance (EHS) subject to state and local reporting under Section 304 of SARA Title III (EPCRA).

The presence of hydrogen sulfide in quantities in excess of the threshold planning quantity (TPQ) of 100 pounds requires certain emergency planning activities to be conducted.

Releases of hydrogen sulfide in quantities equal to or greater than the reportable quantity (RQ) of 100 pounds are subject to reporting to the National Response Center under CERCLA, Section 304 SARA Title III.

SARA TITLE III - HAZARD CLASSES:
Acute Health Hazard
Chronic Health Hazard
Fire Hazard
Sudden Release of Pressure Hazard

SARA TITLE III - SECTION 313 SUPPLIER NOTIFICATION:
This product contains the following toxic chemicals subject to the reporting requirements of section 313 of the Emergency Planning and Community Right-To-Know Act (EPCRA) of 1986 and of 40 CFR 372:

CAS NUMBER	INGREDIENT NAME	PERCENT BY VOLUME
7783-06-4	Hydrogen sulfide	> 99.0

This information must be included on all MSDSs that are copied and distributed for this material.

16. Other Information

Compressed gas cylinders shall not be refilled without the express written permission of the owner. Shipment of a compressed gas cylinder which has not been filled by the owner or with his/her (written) consent is a violation of transportation regulations.

DISCLAIMER OF EXPRESSED AND IMPLIED WARRANTIES:
Although reasonable care has been taken in the preparation of this document, we extend no warranties and make no representations as to the accuracy or completeness of the information contained herein, and assume no responsibility regarding the suitability of this information for the user's intended purposes or for the consequences of its use. Each individual should make a determination as to the suitability of the information for their particular purpose(s).

Hydrogen Sulfide
Training for CES/PACE Employees

Scope and Purpose

- SCOPE
  - This training applies to employees who may be occupationally exposed to Hydrogen Sulfide (H2S) Gas in a broad range of industrial settings.
- PURPOSE
  - The purpose of this training is to educate employees about Hydrogen Sulfide Gas and remove fear of the unknown through education and training. Employees should learn to work safely in and around hydrogen sulfide gas.
- Employees whose work may at one point expose them to Hydrogen Sulfide should know:
  - How to recognize its presence
  - How to protect themselves
  - How to avoid its lethal effects
  - How to rescue and give first aid to victims who are overcome by the toxic hazard

H_2S Training Objectives

- This training will acquaint you with safe practices and procedures involving Hydrogen Sulfide hazards. You will become familiar with:
  - What Hydrogen Sulfide is
  - Where Hydrogen Sulfide is found
  - The properties of Hydrogen Sulfide
  - Adverse physical effects of Hydrogen Sulfide
  - Detection and monitoring of Hydrogen Sulfide
  - Safe Breathing air equipment
  - Rescue and first aid procedures
- Further training in the actual operation of detection and monitoring instruments, fitting and wearing self-contained breathing air devices and staged emergency response and rescuer drills are needed in addition to this basic training.

H_2S Defined

- Hydrogen Sulfide is a highly toxic, colorless gas. It is formed by the decomposition of organic animal or vegetable matter by bacteria. It is found in natural oil and gas, sewers and cesspools or stagnant water. It is found in swamps and is produced in a variety of industrial settings.
- Hydrogen Sulfide is referred to in industry by a number of different names:

– H2S *(its chemical symbol)*	*Rotten Egg Gas*
– Stink Damp	Hydro sulfuric Acid
– Sulfurated Hydrogen	Sulfur Hydride
– *Sour Crude*	*Sour Gas*

EPAPA010000473

H_2S Defined

- A molecule of Hydrogen Sulfide Gas is made up of two Hydrogen atoms and one Sulfur atom (H_2S).
- H_2S may be expressed in parts per million (ppm) or percent air. Do not get confused between ppm and percentage of H2S. The difference may kill you!
- To convert from ppm to % move decimal (4) places to the left

1. ppm =	.0001%	which is 1/10,000 of 1%
10. ppm =	.001%	which is 1/1,000 of 1%
100. ppm =	.01%	which is 1/100 of 1%
200. ppm =	.02%	which is 2/100 of 1%
500. ppm =	.05%	which is 5/100 of 1%
10,000 ppm =	1%	which is 1%

How small of an amount is 1 ppm?

UNIT	1 PART PER MILLION
Length	1 Inch / 16 Miles
Time	1 Minute / 2 Years
Money	1 Cent / $10,000
Weight	1 Ounce / 31 Tons Potato Chips
Volume	1 Drop Vermouth / 80 "Fifths" Gin
Area	1 ft2 / 23 Acres
Action	1 Bogey / 3,500 Golf Tournaments
Quality	1 Bad Apple / 2,000 Barrels

Sources of H2S

- Hydrogen sulfide occurs in a broad range of industrial settings and is found in high concentrations in the oil & gas and chemical industries. The following is only partial list of sources.
  - Oil and Gas Exploration
  - Oil and Gas Production
  - Oil and Gas Processing
  - Petroleum Refineries
  - Chemical Plants
  - Industrial and Municipal Sewers
  - Coke Ovens
  - Leather Tanneries
  - Pump and Paper Mills
  - Water Treatment Plants
  - Underground Mining
  - Sewage Treatment Plants
  - Heavy Water Plants
  - Geothermal Facilities
- You might briefly review and list the areas in your working environment where you are most likely to encounter Hydrogen Sulfide Hazards!

Properties and Toxicity

- H2S is **Toxic or Toxin as is a poisonous substance of animal, vegetable, or microbic origin.**
- Threshold Limit Value (TLV) - A time-weighted average concentration under which most people can work consistently for 8 hours a day, day after day, with no harmful effects.
  - TLV for H_2S is 10ppm.
- Permissible Exposure Level (PEL) – Ceiling exposure limit that is published and enforced by OSHA as a legal standard.
  - PEL Ceiling limit for H_2S is 20ppm.

EPAPA010000474

Properties and Toxicity (cont'd)

- Immediately Dangerous to Life & Health (IDLH) - A exposure limit that is published by NIOSH.
  - 100 PPM reduced from 300 PPM.
- Hazardous Limit- May cause death after 1 hour exposure.
  - Hazardous Limit for H2S is 250ppm.
- Lethal Concentration - Can cause death after short term exposure.
  - Lethal Limit for H2S is 500 - 700ppm.

Properties and Toxicity (cont'd)

- H2S is flammable in a range of 4.3% to 45% by volume in air. Ignition temperature is 5000F or 2600C, a cigarette burns at 1400°F. Burns with a blue flame producing Sulfur Dioxide which is also a highly toxic substance, be aware of this around flare systems!
- Soluble in liquids - may be found in waste liquids in plants or drilling mud systems.
- Offensive odor, often described as that of Rotten Eggs, but only in low relatively harmless concentrations. Deadens sense of smell rapidly in as low as 100PPM range. Odor may be masked by the presence of other odorous substances. The sense of smell is not in the least dependable as a means of detection.

Properties and Toxicity (cont'd)

- H2S is colorless or transparent cannot be seen or detected by sight.
- H2S is approximately 19% heavier than air with a vapor density of 1.189 (Air = 1.0). May tend to settle in low lying areas or enclosed spaces with little or no ventilation.
- Highly Corrosive to certain metals and can cause what is known as Hydrogen Sulfide Stress Cracking. Deformation or fracture will occur in certain metals. This failure can be sudden.

Toxicity Table

Common Name	Chemical Formula	Specific Gravity (Air=1.0)	1 Threshold Limit	2 Hazardous Limit	3 Lethal Conc.
Hydrogen Cyanide	HCN	0.94	10ppm	150ppm	[illegible]
Hydrogen Sulfide	H_2S	1.18	20ppm	250ppm	[illegible]
Sulfur Dioxide	SO_2	2.21	5ppm	-	[illegible]
Chlorine	Cl_2	2.45	1ppm	4ppm	[illegible]
Carbon Monoxide	CO	0.97	50ppm	400ppm	[illegible]
Carbon Dioxide	CO_2	1.52	5000ppm	5%	[illegible]
Methane	CH_4	0.55	9%	Combustible above 5% in Air	

Toxic Gases formed when Burning or Flaring H_2S

Sulfur Dioxide (SO_2)
Carbon Dioxide (CO_2)
Carbon Monoxide (CO)
Oxides of Nitrogen (NOX)

Be aware of these gases around flaring operations, H_2S being burned does not render it harmless!

EPAPA010000475

PHYSICAL EFFECTS

HOW DOES H_2S AFFECT INDIVIDUALS?

When a person breathes in H_2S it goes directly through the lungs and into the bloodstream. To protect itself, the body "oxidizes" (breaks down) the H_2S as rapidly as possible into a harmless compound. If the individual breathes in so much H_2S that the body can't oxidize all of it, the H_2S builds up in the blood and the individual becomes poisoned. The nerve centers in the brain, which control breathing, are paralyzed. The *lungs* stop working and the person is asphyxiated.

The way H_2S affects you depends on the following factors:

1. Duration: The length of time the individual is exposed.
2. Frequency: How often has the individual been exposed.
3. Intensity: How much dosage (concentration) the individual was exposed to.
4. Individual Susceptibility: The individual's physiological make-up.

Warning

- H2S at low concentrations may cause irritation of eyes, nose and throat along with vomiting.
- H2S at moderate concentrations may cause: excitement, headaches, dizziness, nausea, vomiting and coughing, loss of equilibrium.
- H2S at high concentrations may cause; loss of consciousness rapidly and death may result unless the victim is moved to fresh air and first aid administered.
- H2S may cause other effects such as: hysteria and violent convulsions with victim becoming very rigid before falling. Some victims have received injuries as a result of falling. Some victims may be difficult to handle and will invariably need some form of artificial respiration.

Concentrations and Physical Effects

.13 ppm	Minimum Perceptible odor
4.6 ppm	Easily Detectable Moderate odor
10 ppm	Beginning Eye irritation
27 ppm	Strong unpleasant odor but not intolerable
100 ppm	Coughing, Eye irritation, loss of sense of smell in 2 to 15 minutes
200 to 300ppm	Marked eye and respiratory irritation after one hour exposure
500 to 700ppm	Loss of consciousness and possible death in 30 minutes to 1 hour
700 to 1000ppm	Rapid unconsciousness, cessation of breathing and probable death without rescue or resuscitation in minutes

DETECTION/MONITORING

- Detection and Monitoring of Hydrogen Sulfide in the work place is essential to implementing an effective personnel safety program.
- *No human sense can be relied on as a means of detecting* H2S.
- This toxic gas is colorless, and odorless in concentrations as low as 100ppm by volume.
- A false sense of security may result when the rotten egg odor is at first present and seemingly disappears.
- The hazard may have reached higher (more hazardous) concentrations not detectable by sense of smell.

EPAPA010000476

DETECTION/MONITORING (cont'd)

- Instruments are available for measuring hydrogen sulfide gas.
- Similar to the carbon monoxide monitors, the hydrogen sulfide instruments analyze ambient air using an electrochemical polarographic cell.
- Many H2S instruments feature a dual-range meter that provides an analog readout in parts per million of hydrogen sulfide.
- For general readings, a high range measures 0-100 ppm hydrogen sulfide.
- For more accurate readings, a low range measures from 0-20 ppm H2S.

DETECTION/MONITORING (cont'd)

- There are also compact hydrogen sulfide monitors available that are designed for applications in which continual checks for hydrogen sulfide are necessary.
- These instruments are usually hand-held or belt-worn and do not feature a dual-range meter.
- However, they are ideal for application in confined spaces since they operate by diffusion and do not require a battery-operated pump.

Respiratory Protection Equipment/Rescue

- Types of respiratory equipment used by EPE:
  - Forced air unit trailer with breathing air bottles
  - Scott air pack (which is to be used only in case of emergency rescue or escape).
- Uses of forced air units include:
  - Clamping leaks
  - Vessel Entry
  - Anytime H2S is present or sufficient oxygen is absent
  - Changing of Hot valves

Air Purifying Respirators

Half mask respirators with a HEPA cartridge are Air purifying respirators!

Breathing Air

- Air…Not Oxygen (19-23% O_2)
- Compressed Gas Association (CGA) Requires Grade D
- No Odor Permitted

How much air???

- One 30-Minute Cylinder Contains 45 ft3
- At Maximum Work: 4.6 ft3 Minute
- "30-Minute Pack" Lasts Less Than 10 Minutes!!!
- Egress Bottles (with airline respirators) and Escape Packs are for escape purposes only! Never attempt to make a rescue without the proper equipment!

Emergency Rescue

- If a situation should arise that requires a person to be rescued from an area where H2S is present, several steps should always be taken:
  - A rescue should never be attempted without donning the proper rescue equipment.
  - Another employee with rescue breathing equipment should be immediately available to assist the rescuer. The rescuer should be in view of the attendant at all times or in voice communication.

Emergency Rescue (Cont'd)

- Using the proper breathing equipment, move the victim to a safe area with fresh air. (know your wind direction, upwind, downwind).
- If breathing has stopped, administer mouth-to-mouth breathing. (CPR if required).
- When the victim has revived, be cautious of irrational behavior and nausea. Treatment for shock may be necessary. Never leave the victim alone.
- Take the victim to a physician. For further information on treatment of H2S poisoning, call your local Poison Control Center.

Detect Services Corporation
Gas Detection Specialists
Phone (281) 479-2706 * Fax (281) 479-2780
1318 Underwood Rd Suite 101
LaPorte, Texas 77571

CALIBRATION AND TEST REPORT

Job # T14499

Customer: CES ENVIRONMENTAL SERVICES
Address: 2420 GULWAY DRIVE
City: PORT ARTHUR State: TX 77640

MFG.	Model	Controller Serial #	Channel Card Serial #	Head Location	Gas Type	Zero Reading	Span Reading	Results
RKI	BEACON 800							
			CH. 1 B8-087004-1	CH. 1	H2S	0 PPM	25 PPM	OK
			CH. 2 B8-087004-2	CH. 2	H2S	0 PPM	25 PPM	OK
			CH. 3 B8-087004-4	CH. 3	H2S	0 PPM	25 PPM	OK
			CH. 4 B8-087004-3	CH. 4	H2S	0 PPM	25 PPM	OK
			CH. 5 B8-087004-5	CH. 5	H2S	0 PPM	25 PPM	OK

Pre-Calibration Test Response

Instrument S/N	Toxic-H2S Zero	Toxic-H2S Span	Results
CH. 1 B8-087004-1	0 PPM	22 PPM	PASS
CH. 2 B8-087004-2	0 PPM	19 PPM	OUT OF SPEC.
CH. 3 B8-087004-4	0 PPM	17 PPM	OUT OF SPEC.
CH. 4 B8-087004-3	0 PPM	13 PPM	OUT OF SPEC.
CH. 5 B8-087004-5	0 PPM	25 PPM	PASS

The instruments listed above were tested and calibrated to meet manufacturer performance specifications. The gases used were specialty gas mixtures, which are N.I.S.T. traceable and certified by manufacturer to be accurate to plus or minus 2% of the minor component.

Gas	Concentration	Lot Number
O2 OXYGEN	20.9%	AMBIENT
H2S HYDROGEN SULFIDE	25 PPM	590915-152

Technician: TIM \ MIKE
Date: JULY 22, 2009

.tect Services Corp.
1318 Underwood Rd Ste#101
La Porte, TX 77571
PH: 281-479-2706 FX: 2780

INVOICE

Date	Invoice #
7/22/2009	T14500

Bill To	Ship To
CES Environmental Services, Inc. 4904 Griggs Road Houston, TX 77021	CES Environmental Services, Inc. 4904 Griggs Road Houston, TX 77021

P.O. Number	Terms	Rep	Ship Date	Ship Via	Region
Rick Tullos	Net 30	TB&MR	7/22/2009		

Qty	Item Code	Description	Rate	Amount
1	Labor, Field	Labor, Field Service Date: 07-22-09 Tech: Tim Bush & Mike Ricarte	650.00	650.00
	Personal Mile	Miles x $0.46	78.20	78.20
		Note: Inspection & calibration of gas detection system Verified proper operation & alarm response. System is fully operational.		

Thank you for your business.	**Total**	$728.20

REMIT PAYMENT TO: DETECT SERVICES CORPORATION
P.O. BOX 220
SOMERS, NY 10589

Toll Free 1-877-500-2706

H2S Alarm

EPAPA010000481

H2S Alarms Activated					
Date	Time	Rescue Yes/No	Employees Evacuated	Employee's Monitor Readings	Notes
29-May-09	9:35am	No	Yes	None	Plant alarms sounded at 8 ppm while pressure washing floor
5-Jun-09	13:00	no	yes	none	Plant alarms sounded while loading a trailer
8-Jun-09	10:20am	no	yes	None	KMTX sent a trl to us pressured when we vented the trl the alarms sounded

Note: If a rescue occurred, state who rescued who.

EPAPA010000482

Daily H2S Reading Logs

EPAPA010000483

TCEQ

TQEC / N.O.V. S
N.O.R.

EPAPA010000484

NOR

EPAPA010000485

IHW020

*** TEXAS COMMISSION ON ENVIRONMENTAL QUALITY ***
Notice of Registration
Industrial and Hazardous Waste

NOR

Page: 1
Date: 09/10/08

88585 CES Environmental Services Inc

Solid Waste Registration Number: 88585 EPA Id: TXR000079307

Company Name: CES Environmental Services Inc
Site Name: CES Environmental Services Port Arthur
Site Location: 2420 S Gulfway Dr, Port Arthur, TX
8

Region: 10
County: 123 Jefferson
Land Type: Private

Initial Registration Date: 08/12/2008
Last Amendment Date:
Last Date NOR Computer update: 08/29/200

Primary Contact: Thangudu, Prabhakar
Mailing Address: 2420 S Gulfway Dr
Port Arthur, TX 77640-4541

Title: HSE Manager
Phone: 281-433-9792
Site Street Address: 2420 S Gulfway Dr
Port Arthur, TX 77640-4541

Registration Status: Active
Registration Type: Generator Transporter
Generator Type: Industrial
Transporter Type: For hire Transport own waste
Transport Wst Class: 1 2 H

Hazardous Waste Generation Status: Conditionally Exempt Small Quantity Generator

Business Description: Chemical manufacturing

NAICS Code: 325188 All Other Basic Inorganic Chemical Manufacturing
Tax Identification #: 17605929854
Handler Status:

Operator Information
Name: CES Environmental Services Inc
Phone: 281-433-9792
Address: 2420 S Gulfway Dr
Port Arthur, TX, 77640-4541

Owner Information
Name: CES Environmental Services Inc
Phone: 281-433-9792
Address: 2420 S Gulfway Dr
Port Arthur, TX, 77640-4541

Billing Contact:
Billing Address:

Title:
Phone:

As of 08/29/2008 - the next unassigned sequence number for WASTES is 0003 and
the next unassigned sequence number for UNITS is 003.

IHW020 *** TEXAS COMMISSION ON ENVIRONMENTAL QUALITY *** Page: 2
Notice of Registration Date: 09/10/08
Industrial and Hazardous Waste

88585 CES Environmental Services Inc

**** WASTE INFORMATION ****

Texas Waste Code	Waste Class	Status	Date of Status	Managed Onsite/ Offsite	Radio-active	TCEQ Audit Complete
****** Active Wastes ******						
00011131 1		Active	08/12/08	On		No

Description from Generator: Wastewater generated in manufacturing. Date of generation: 08-25-2008
Texas Form Code: 113 Other aqueous waste with high dissolved solids
Current Management Units: Tank 001
* Origin Codes: 1 Onsite-process/service

00021132 2		Active	08/12/08	On		No

Description from Generator: Wastewater generated in manufacturing. Date of generation: 08-25-2008
Texas Form Code: 113 Other aqueous waste with high dissolved solids
Current Management Units: Tank 002
* Origin Codes: 1 Onsite-process/service

* The first value is considered the primary value (e.g. primary origin code).
As of 08/29/2008, the next unassigned sequence number for WASTES is 0003.

IHW020 *** TEXAS COMMISSION ON ENVIRONMENTAL QUALITY *** Page: 3
Notice of Registration Date: 09/10/08
Industrial and Hazardous Waste

88585 CES Environmental Services Inc

**** UNITS AT THIS SITE MANAGING WASTE ****

** 'Active', 'Closure Pending' & 'Closure Request' Units **

Unit Number	Unit Type	Unit Status	Date of Status	Classes of Waste Managed in Unit Onsite / Offsite	Unit Permit Number	Unit # on Permit	Regulatory Status	Deed Recording Needed/Date
001	Tank	Active	08/12/08	1/ NA	NA	NA	Non-Hazardous Regulated	NA /

Description from Company: Wastewater Tank
Capacity: 39000.0000 Capacity Unit of Measure: G
System Types: 141 Storage, bulking, and/or transfer off-site - no tr
Biennial System Regulatory Status: Regulatory status unknown
Wastes Currently Managed in Unit: 00011131 Wastewater

Unit Number	Unit Type	Unit Status	Date of Status	Classes of Waste Managed in Unit Onsite / Offsite	Unit Permit Number	Unit # on Permit	Regulatory Status	Deed Recording Needed/Date
002	Tank	Active	08/12/08	2/ NA	NA	NA	Non-Hazardous Regulated	NA /

Description from Company: Wastewater tank
System Types: 141 Storage, bulking, and/or transfer off-site - no tr
Biennial System Regulatory Status: Regulatory status unknown
Wastes Currently Managed in Unit: 00021132 Wastewater

As of 08/29/2008, the next unassigned sequence number for UNITS is 003.

Matt Bowman NOR

From: Prabhaker Thangudu
Sent: Tuesday, September 23, 2008 1:16 PM
To: Clinton Hopkins
Cc: Matt Bowman; Marlin Moser; Greg Bowman; Ryan Thomas
Subject: Additional Texas Waste Codes for Port Arthur

Clint:

The following four waste Codes have been added to CES Environmental Services, Inc., Port Arthur Notice of Registration.

	Waste Description	Texas Waste Code Number
1	Class 1 Inorganic Solids	00043191
2	Class 2 Inorganic Solids	00053192
3	Class 1 Inorganic Sludge	00065191
4	Class 2 Inorganic Sludge	00075192

Please let me know if you need additional information.

Thanks
Prabhakar

EPAPA010000489

TCEQ

Matt Bowman

From: Prabhaker Thangudu
Sent: Wednesday, September 10, 2008 1:57 PM
To: Clinton Hopkins
Cc: Karl Guidry; Marlin Moser; Matt Bowman; Matt Moser; Greg Bowman; Joe Camp; Ryan Thomas; Clark Hickman
Subject: CES Port Arthur

Clint:

The registration process with TCEQ for Port Arthur site is complete and the details ensue.

Solid Waste Registration Number: **88585**

EPA Id: **TXR000079307**

NAICS Code: **325188**

Business Description: **Chemical Manufacturing**

Hazardous Waste Generation Status: **Conditionally Exempt Small Quantity Generator**

Please let me know if you need additional information.

Prabhakar

EPAPA010000490

IHW020

*** TEXAS COMMISSION ON ENVIRONMENTAL QUALITY ***
Notice of Registration
Industrial and Hazardous Waste

88585 CES Environmental Services Inc

Solid Waste Registration Number: 88585 EPA Id: TXR000079307

Company Name: CES Environmental Services Inc
Site Name: CES Environmental Services Port Arthur
Site Location: 2420 S Gulfway Dr, Port Arthur, TX
Region: 10
County: 123 Jefferson
Land Type: Private
Initial Registration Date: 08/12/2008
Last Amendment Date:
Last Date NOR Computer update: 08/29/2008

Primary Contact: Thangudu, Prabhakar
Title: HSE Manager
Phone: 281-433-9792
Mailing Address: 2420 S Gulfway Dr
Port Arthur, TX 77640-4541
Site Street Address: 2420 S Gulfway Dr
Port Arthur, TX 77640-4541

Registration Status: Active
Registration Type: Generator Transporter
Generator Type: Industrial
Transporter Type: For hire Transport own waste
Transport Wst Class: 1 2 H
Hazardous Waste Generation Status: Conditionally Exempt Small Quantity Generator

Business Description: Chemical manufacturing

NAICS Code: 325188 All Other Basic Inorganic Chemical Manufacturing
Tax Identification #: 17605929854
Handler Status:

Operator Information
Name: CES Environmental Services Inc
Phone: 281-433-9792
Address: 2420 S Gulfway Dr
Port Arthur, TX, 77640-4541

Owner Information
Name: CES Environmental Services Inc
Phone: 281-433-9792
Address: 2420 S Gulfway Dr
Port Arthur, TX, 77640-4541

Billing Contact:
Title:
Phone:
Billing Address:

As of 08/29/2008 - the next unassigned sequence number for WASTES is 0003 and
the next unassigned sequence number for UNITS is 003.

IHW020 *** TEXAS COMMISSION ON ENVIRONMENTAL QUALITY *** Page: 2
Notice of Registration Date: 09/10/08
Industrial and Hazardous Waste

88585 CES Environmental Services Inc

**** WASTE INFORMATION ****

Texas Waste Code	Waste Class	Status	Date of Status	Managed Onsite/ Offsite	Radio-active	TCEQ Audit Complete
****** Active Wastes ******						
00011131	1	Active	08/12/08	On		No

Description from Generator: Wastewater generated in manufacturing. Date of generation: 08-25-2008
Texas Form Code: 113 Other aqueous waste with high dissolved solids
Current Management Units: Tank 001
* Origin Codes: 1 Onsite-process/service

00021132	2	Active	08/12/08	On		No

Description from Generator: Wastewater generated in manufacturing. Date of generation: 08-25-2008
Texas Form Code: 113 Other aqueous waste with high dissolved solids
Current Management Units: Tank 002
* Origin Codes: 1 Onsite-process/service

* The first value is considered the primary value (e.g. primary origin code).
As of 08/29/2008, the next unassigned sequence number for WASTES is 0003.

IHW020 *** TEXAS COMMISSION ON ENVIRONMENTAL QUALITY *** Page: 3
Notice of Registration Date: 09/10/08
Industrial and Hazardous Waste

88585 CES Environmental Services Inc

**** UNITS AT THIS SITE MANAGING WASTE ****

Unit Number	Unit Type	Unit Status	Date of Status	Classes of Waste Managed in Unit Onsite / Offsite	Unit Permit Number	Unit # on Permit	Regulatory Status	Deed Recording Needed/Date
** 'Active', 'Closure Pending' & 'Closure Request' Units **								
001	Tank	Active	08/12/08	1/ NA	NA	NA	Non-Hazardous Regulated	NA /
Description from Company: Wastewater Tank								
Capacity: 39000.0000 Capacity Unit of Measure: G								
System Types: 141 Storage, bulking, and/or transfer off-site - no tr								
Biennial System Regulatory Status: Regulatory status unknown								
Wastes Currently Managed in Unit: 00011131 Wastewater								
002	Tank	Active	08/12/08	2/ NA	NA	NA	Non-Hazardous Regulated	NA /
Description from Company: Wastewater tank								
System Types: 141 Storage, bulking, and/or transfer off-site - no tr								
Biennial System Regulatory Status: Regulatory status unknown								
Wastes Currently Managed in Unit: 00021132 Wastewater								

As of 08/29/2008, the next unassigned sequence number for UNITS is 003.

CES Environmental Services, Inc.

August 12, 2008

Texas Commission on Environmental Quality
Registration, Review, and Reporting Division
Registration and Reporting Section, MC 129
PO Box 13087
Austin, Texas 78711-3087

Reference: TCEQ-10400, TCEQ Core Data Form
TCEQ-00002, Notification for Hazardous or Industrial Waste Management
EPA Form 8700-12, RCRA Subtitle C Site Identification Form

Registration and Reporting Section:

Attached are originals of the above referenced forms, submitted for the purpose of receiving a new waste generation registration for the CES Environmental Services, Inc. (Port Arthur).

Should you have any questions regarding the information submitted with this letter, please contact me at 713-676-1460.

Sincerely,

Prabhakar Thangudu
HSE Manager

TCEQ

TCEQ Use Only

TCEQ Core Data Form

For detailed instructions regarding completion of this form, please read the Core Data Form Instructions or call 512-239-5175.

SECTION I: General Information

1. Reason for Submission *(If other is checked please describe in space provided)*

☑ New Permit, Registration or Authorization *(Core Data Form should be submitted with the program application)*

☐ Renewal *(Core Data Form should be submitted with the renewal form)* ☐ Other

2. Attachments **Describe Any Attachments:** *(ex. Title V Application, Waste Transporter Application, etc.)*

☐ Yes ☑ No

3. Customer Reference Number *(if issued)*	Follow this link to search for CN or RN numbers in Central Registry**	4. Regulated Entity Reference Number *(if issued)*
CN		RN

SECTION II: Customer Information

5. Effective Date for Customer Information Updates (mm/dd/yyyy) 07/01/2008

6. Customer Role (Proposed or Actual) – *as it relates to the Regulated Entity listed on this form. Please check only one of the following:*

☐ Owner ☐ Operator ☑ Owner & Operator
☐ Occupational Licensee ☐ Responsible Party ☐ Voluntary Cleanup Applicant ☐ Other: _____

7. General Customer Information

☑ New Customer ☐ Update to Customer Information ☐ Change in Regulated Entity Ownership
☐ Change in Legal Name (Verifiable with the Texas Secretary of State) ☐ No Change**

If "No Change" and Section I is complete, skip to Section III – Regulated Entity Information.

8. Type of Customer:	☑ Corporation	☐ Individual	☐ Sole Proprietorship- D.B.A
☐ City Government	☐ County Government	☐ Federal Government	☐ State Government
☐ Other Government	☐ General Partnership	☐ Limited Partnership	☐ Other: _____

9. Customer Legal Name *(If an individual, print last name first: ex: Doe, John)* *If new Customer, enter previous Customer below* *End Date:*

CES Environmental Services, Inc. (Port Arthur)

10. Mailing Address: 2420 South Gulfway Drive

City	Port Arthur	State	TX	ZIP	77641	ZIP + 4	

11. Country Mailing Information *(if outside USA)*

12. E-Mail Address *(if applicable)* pthangduu@cesenvironmental.com

13. Telephone Number (281) 433-9792 **14. Extension or Code** **15. Fax Number** *(if applicable)* (713) 676-1676

16. Federal Tax ID *(9 digits)*	17. TX State Franchise Tax ID *(11 digits)*	18. DUNS Number *(if applicable)*	19. TX SOS Filing Number *(if applicable)*
760592985	17605929854	001736581	

20. Number of Employees

☑ 0-20 ☐ 21-100 ☐ 101-250 ☐ 251-500 ☐ 501 and higher

21. Independently Owned and Operated?

☑ Yes ☐ No

SECTION III: Regulated Entity Information

22. General Regulated Entity Information *(If 'New Regulated Entity' is selected below this form should be accompanied by a permit application)*

☑ New Regulated Entity ☐ Update to Regulated Entity Name ☐ Update to Regulated Entity Information ☐ No Change** *(See below)*

If "NO CHANGE" is checked and Section I is complete, skip to Section IV, Preparer Information.

23. Regulated Entity Name *(name of the site where the regulated action is taking place)*

CES Environmental Services, Inc. (Port Arthur)

EPAPA010000495

24. Street Address of the Regulated Entity: (No P.O. Boxes)	2420 South Gulfway Drive							
	City	Port Arthur	State	TX	ZIP	77641	ZIP + 4	
25. Mailing Address:	2420 South Gulfway Drive							
	City	Port Arthur	State	TX	ZIP	77641	ZIP + 4	

26. E-Mail Address:	pthangudu@cesenvironmental.com

27. Telephone Number	28. Extension or Code	29. Fax Number (if applicable)
(281) 433-9792		(713) 676-1676

30. Primary SIC Code (4 digits)	31. Secondary SIC Code (4 digits)	32. Primary NAICS Code (5 or 6 digits)	33. Secondary NAICS Code (5 or 6 digits)
2819	2992	325188	324191

34. What is the Primary Business of this entity? *(Please do not repeat the SIC or NAICS description.)*

Chemical manufacturing

Questions 34 – 37 address geographic location. Please refer to the instructions for applicability.

35. Description to Physical Location:	N/A - Street Address (See #24)

36. Nearest City	County	State	Nearest ZIP Code
Port Arthur	Jefferson	TX	77641

37. Latitude (N) In Decimal:			38. Longitude (W) In Decimal:		
Degrees	Minutes	Seconds	Degrees	Minutes	Seconds
29	49	47.71	93	57	48.15

39. TCEQ Programs and ID Numbers Check all Programs and write in the permits/registration numbers that will be affected by the updates submitted on this form or the updates may not be made. If your Program is not listed, check other and write it in. See the Core Data Form instructions for additional guidance.

☐ Dam Safety	☐ Districts	☐ Edwards Aquifer	☐ Industrial Hazardous Waste	☐ Municipal Solid Waste
☐ New Source Review – Air	☐ OSSF	☐ Petroleum Storage Tank	☐ PWS	☐ Sludge
☐ Stormwater	☐ Title V – Air	☐ Tires	☐ Used Oil	☐ Utilities
☐ Voluntary Cleanup	☐ Waste Water	☐ Wastewater Agriculture	☐ Water Rights	☒ Other: Industrial Solid Waste

SECTION IV: Preparer Information

40. Name:	Prabhakar R. Thangudu	41. Title:	HSE Manager

42. Telephone Number	43. Ext./Code	44. Fax Number	45. E-Mail Address
(281) 433-9792		(713) 676 1676	pthangudu@cesenvironmental.com

SECTION V: Authorized Signature

46. By my signature below, I certify, to the best of my knowledge, that the information provided in this form is true and complete, and that I have signature authority to submit this form on behalf of the entity specified in Section II, Field 9 and/or as required for the updates to the ID numbers identified in field 39.

(See the Core Data Form instructions for more information on who should sign this form.)

Company:	CES Port Arthur	Job Title:	HSE Manager
Name (In Print):	Prabhakar R. Thangudu	Phone:	(281) 433-9792
Signature:	Prabhakar R Thangudu	Date:	8-12-2008

TCEQ Use Only
IHW_____CO

Notification For Hazardous or Industrial Waste Management

Please print or type. Definitions and codes can be found in the Hazardous or Industrial Waste Form Instructions. Changes not related to Waste Streams or Waste Management Units must be accompanied by TCEQ Core Data Form (TCEQ 10400).

Part I. General Registration Information

Section A. Notification Type and Registration Numbers

If this is an Initial Notification, leave registration numbers blank. If updating existing Notice of Registration, provide current registration numbers.

1. Notification type (check one): ☑ Initial ☐ Update

2. Solid Waste Registration Number: _ _ _ _ _	3. EPA Identification Number: _ _ _ _ _ _ _ _ _ _ _ _
4. Customer Reference Number: CN_ _ _ _ _ _ _ _ _ _	5. Regulated Entity Number: RN_ _ _ _ _ _ _ _ _ _

Section B. Company Information

1. Company Name: CES Environmental Services, Inc. (Port Arthur)
2. Site Name: CES Environmental Services, Inc. (Port Arthur)
3. Registration Type (check all that apply): ☑ Generator ☐ Receiver ☐ Transporter ☐ Recycler
4. Contact Information: Prabhakar Thangudu, HSE Manager
   (First Name, Last Name, Title)
   Telephone Number: (281) 433-9792 Fax Number: (713) 676-1460 Email: pthangudu@cesenvironmental.com
5. Waste Handler Status (check all that apply):
   ☑ Not Applicable ☐ Permitted TSD ☐ Interim TSD ☐ Recycler

Section C. Generator Information

If your facility does not fit the definition of a "Generator" skip to Section D

1. Generator Type (check all that apply): ☑ Industrial ☐ Non-industrial ☐ Railroad Commission

2. Hazardous Waste Generation Status (check one):	Large Quantity Generator (LQG)	❖2,200 pounds (1,000 kilograms) or more of hazardous waste **and/or** ❖ 2.2 pounds (1 kilogram) or more of acutely hazardous waste
	☐ Small Quantity Generator (SQG)	❖between 220 and 2,200 pounds (100 and 1,000 kilograms) of hazardous waste **and** ❖ less than 2.2 pounds (1 kilogram) of acutely hazardous waste
	☐ Industrial Conditionally Exempt Small Quantity Generator (CESQG)	❖220 pounds (100 kilograms) or less of hazardous waste **and** ❖ less than 2.2 pounds (1 kilogram) of acutely hazardous waste **and** ❖220 pounds (100 kilograms) or more of industrial Class 1 waste
	☐ Universal Waste Only	❖All hazardous waste generated is classified as Universal Waste and no reportable Class 1 waste is generated at the site.

TCEQ Use Only
IHW_____CO

Section D. Receiver Information

If your facility does not fit the definition of a "Receiver" skip to Section E

1. Facility Category (check one): ☐ Commercial ☐ Captive ☐ Captured

2. Class of Waste Received for treatment, storage or disposal (check all that apply):
   ☐ Hazardous ☐ Class 1 ☐ Class 2 ☐ Class 3

3. If you receive waste from off-site and recycle it, see TCEQ Form 0524 "Notification Form for Receiving and Recycling Hazardous or Industrial Waste".

Section E. Transporter Information

If your facility does not fit the definition of a "Transporter" skip to Section F

*To Transport hazardous waste you must have an EPA identification number. See EPA RCRA Subtitle C Site Identification Form (EPA Form 8700-12).

1. Carrier Classification (answer "yes" or "no" to each question):
   a. Do you transport for hire? ☑ Yes ☐ No
   b. Do you transport your own waste? ☑ Yes ☐ No
   c. Is this site a transfer facility? ☐ Yes ☑ No

2. Types of waste transported (check all that apply):
   ☑ Hazardous* ☑ Class 1 ☑ Class 2 ☐ Class 3

Section F. Certification of Company Information

I certify that the information submitted herein is complete and accurate to the best of my knowledge

Prabhakar R. Thangudu	281-433-9792
Printed Preparer's Name	Telephone Number
Prabhakar Thangudu	8-12-2008
Preparer's Signature	Date

Mail all completed registration forms

(i.e., Notification for Hazardous or Industrial Waste Management, TCEQ 00002; TCEQ Core Data Form, TCEQ 10400; EPA RCRA Subtitle C Site Identification Form, EPA Form 8700-12)

Texas Commission on Environmental Quality
Registration, Review, and Reporting Division
Registration and Reporting Section, MC 129
PO Box 13087
Austin, TX 78711-3087

If you have questions on how to fill out this form or about the Industrial and Hazardous Waste Program, please contact us at 512/239-6413. Individuals are entitled to request and review their personal information that the agency gathers on its forms. They may also have any errors in their information corrected. To review such information, contact us at 512/239-3282.

EPAPA010000498

TCEQ Use Only
IHW_____CO

Notification For Hazardous or Industrial Waste Management

Please print or type. Definitions and codes can be found in the Hazardous or Industrial Waste Form Instructions. Changes not related to Waste Streams or Waste Management Units must be accompanied by TCEQ Core Data Form (TCEQ 10400). You may copy this section as needed for each waste stream at your site.

Part II. Waste Stream Notification

Section A. Notification Type and Registration Numbers

If this is an Initial Notification, leave registration numbers blank. If updating existing Notice of Registration, provide current registration numbers.

1. Notification type (check one): ☑ Initial ☐ Update

2. Solid Waste Registration Number: _____

3. EPA Identification Number: _____

4. Customer Reference Number: CN 6 0 0 6 1 8 9 4 6

5. Regulated Entity Number: RN_____

6. Company Name: CES Environmental Services, Inc. (Port Arthur)

7. Site Name: CES Environmental Services, Inc. (Port Arthur)

Section B. Waste Stream Information

1. Texas Waste Code: 0 0 0 1 (Sequence Number) 1 1 3 (Texas Form Code (See Appendix B)) H (1) 2 3 (Clase Code (Circle Class Code))

2. Waste Description and Generating Process:
wastewater generated in manufacturing

3. Date of Generation: 0 8 / 2 5 / 2 0 0 8 (Month Day Year)

4. Origin Code (check one):

✓	1. The waste was generated on-site from a product process or service activity.
	2. The waste resulted from a spill clean-up, equipment decommissioning, or emergency removal by company.
	3. The waste was derived from the on-site management of a non-hazardous waste.
	4. The waste was received from off-site and was not recycled or treated on-site.
	5. The waste was residual from the on-site treatment, disposal or recycling of previously existing hazardous waste.
	6. The waste was from a state, federal, or locally funded cleanup.
	7. The waste was from a corrective action or closure.

5. New Chemical Substance: ☐ Yes ☑ No
If you check "yes" and the waste is Class 2 or Class 3, attach copies of all information, documentation and rationale used to classify the waste.

6. Waste Management Location (check all that apply): ☑ On-site ☐ Off-site
Provide the 3-digit waste management unit sequence number for any **ON-SITE** waste management units where this waste is treated, stored or disposed. If the waste management unit is new, leave blank, and include waste stream in Part III Waste Management Unit Notification, question 9.
0 0 1 ___ ___ ___ ___ ___

7. If this waste is recycled, see TCEQ Form 0525 "Generator Notification Form for Recycling Hazardous or Industrial Waste".

TCEQ Use Only
IHW_____CO

Please provide the 8-digit Texas Waste Code from Item 1 of Section B of the previous page:
0 0 0 1 1 1 3 1

If this waste is non-hazardous, skip Questions 8-13 and go to Section C. Certification of Waste Stream Information

8. EPA Hazardous Waste Numbers (EPA Codes):

____ ____ ____ ____ ____

____ ____ ____ ____ ____

9. NAICS Code:

10. Source Code (See Appendix C): G

11. Mixed Radioactive Waste: ☐ Yes ☐ No

12. System Type Code (See Appendix D): H

*Only fill out System Type Code if you selected Origin Code 5 from the previous page.

13. EPA Form Code (See Appendix E): W

Section C. Certification of Waste Stream Information

I certify that the information submitted herein is complete and accurate to the best of my knowledge.

Prabhakar R. Thangudu	281-433-9792
Printed Preparer's Name	Telephone Number
Prabhakar Thangudu	8-12-2008
Preparer's Name	Date

TCEQ Use Only
IHW _____ CO

Notification For Hazardous or Industrial Waste Management

Please print or type. Definitions and codes can be found in the Hazardous or Industrial Waste Form Instructions. Changes not related to Waste Streams or Waste Management Units must be accompanied by TCEQ Core Data Form (TCEQ 10400). You may copy this section as needed for each waste stream at your site.

Part II. Waste Stream Notification

Section A. Notification Type and Registration Numbers

If this is an Initial Notification, leave registration numbers blank. If updating existing Notice of Registration, provide current registration numbers.

1. Notification type (check one): ☑ Initial ☐ Update

2. Solid Waste Registration Number: _____

3. EPA Identification Number: _____

4. Customer Reference Number: CN 6 0 0 6 1 8 9 4 6

5. Regulated Entity Number: RN _____

6. Company Name: CES Environmental Services, Inc. (Port Arthur)

7. Site Name: CES Environmental Services, Inc. (Port Arthur)

Section B. Waste Stream Information

1. Texas Waste Code: 0 0 0 2 (Sequence Number) 1 1 3 (Texas Form Code (See Appendix B)) H 1 (2) 3 (Class Code (Circle Class Code))

2. Waste Description and Generating Process:
Wastewater generated in manufacturing

3. Date of Generation: 08/25/2008 (Month Day Year)

4. Origin Code (check one):

✓	1. The waste was generated on-site from a product process or service activity.
	2. The waste resulted from a spill clean-up, equipment decommissioning, or emergency removal by company.
	3. The waste was derived from the on-site management of a non-hazardous waste.
	4. The waste was received from off-site and was not recycled or treated on-site.
	5. The waste was residual from the on-site treatment, disposal or recycling of previously existing hazardous waste.
	6. The waste was from a state, federal, or locally funded cleanup.
	7. The waste was from a corrective action or closure.

5. New Chemical Substance: ☐ Yes ☑ No
If you check "yes" and the waste is Class 2 or Class 3, attach copies of all information, documentation and rationale used to classify the waste.

6. Waste Management Location (check all that apply): ☐ On-site ☐ Off-site
Provide the 3-digit waste management unit sequence number for any **ON-SITE** waste management units where this waste is treated, stored or disposed. If the waste management unit is new, leave blank, and include waste stream in Part III Waste Management Unit Notification, question 9.

0 0 2 ___ ___ ___ ___ ___

7. If this waste is recycled, see TCEQ Form 0525 "Generator Notification Form for Recycling Hazardous or Industrial Waste".

TCEQ Use Only
IHW_____CO

Please provide the 8-digit Texas Waste Code from Item 1 of Section B of the previous page:
0 0 0 2 1 1 3 2

If this waste is non-hazardous, skip Questions 8-13 and go to Section C. Certification of Waste Stream Information

8. EPA Hazardous Waste Numbers (EPA Codes):

____ ____ ____ ____ ____

____ ____ ____ ____ ____

9. NAICS Code:

10. Source Code (See Appendix C): G

11. Mixed Radioactive Waste: ☐ Yes ☐ No

12. System Type Code (See Appendix D): H

*Only fill out System Type Code if you selected Origin Code 5 from the previous page.

13. EPA Form Code (See Appendix E): W

Section C. Certification of Waste Stream Information

I certify that the information submitted herein is complete and accurate to the best of my knowledge.

Prabhakar R. Thangudu	281-433-9792
Printed Preparer's Name	Telephone Number
Prabhakar Thangudu	8-12-2008
Preparer's Name	Date

TCEQ Use Only
IHW_____CO

Notification For Hazardous or Industrial Waste Management

Please print or type. Definitions and codes can be found in the Hazardous or Industrial Waste Form Instructions. Changes not related to Waste Streams or Waste Management Units must be accompanied by TCEQ Core Data Form (TCEQ 10400). You may copy this section as needed for each waste management unit at your site.

Part III. Waste Management Unit Notification

Section A. Notification Type and Registration Numbers

If this is an Initial Notification, leave registration numbers blank. If updating existing Notice of Registration, provide current registration numbers.

1. Notification type (check one): ☑ Initial ☐ Update

2. Solid Waste Registration Number: _____ | 3. EPA Identification Number: _____

4. Customer Reference Number: CN 6 0 0 6 1 8 9 4 6 | 5. Regulated Entity Number: RN_____

6. Company Name: CES Environmental Services, Inc. (Port Arthur)

7. Site Name: CES Environmental Services, Inc. (Port Arthur)

Section B. Waste Management Unit Information

1. Unit Sequence Number: 0 0 1 | 2. Unit Type Code: 1 3 (See Appendix F) | 3. Capacity: 39,000 gallons

4. Unit Description: Wastewater Tank

5. Is this unit permitted? ☐ Yes ☑ No | 5a. IHW Permit No. N/A | 5b. UIC Permit No. N/A

6. Unit Registration Status (check one): ☐ Active ☐ Inactive ☐ Not Yet Built ☑ Under Construction

7. Unit Regulatory Status (check one):

✓	Non-hazardous Regulated		Permitted Non-hazardous Industrial Unit
	UIC Permitted		UIC Registration
	RCRA Permitted Unit		RCRA Permit Exempt <90 Day Storage
	RCRA Permit Exempt - Accumulation Time		RCRA Permit Exempt - Recycling Unit per §335.24
	RCRA Permit Exempt - Totally Enclosed Treatment		RCRA Permit Exempt - Wastewater Treatment Unit

8. System Type Code (See Appendix D): H 141 H ___ H ___ H ___

9. Type of off-site waste managed in unit (check all that apply):
☑ Does Not Apply ☐ Hazardous ☐ Industrial Class 1 ☐ Industrial Class 2 ☐ Industrial Class 3

10. List the waste streams (Texas Waste Code) generated on-site and managed in this unit:
0 0 0 1 1 1 3 1

Section C. Certification of Waste Management Unit Information

I certify that the information submitted herein is complete and accurate to the best of my knowledge

Prabhakar R. Thangudu
Printed Preparer's Name

281-433-9792
Telephone Number

Prabhakar R. Thangudu
Preparer's Signature

8-12-2008
Date

TCEQ Use Only
IHW _____ CO

Notification For Hazardous or Industrial Waste Management

Please print or type. Definitions and codes can be found in the Hazardous or Industrial Waste Form Instructions. Changes not related to Waste Streams or Waste Management Units must be accompanied by TCEQ Core Data Form (TCEQ 10400). You may copy this section as needed for each waste management unit at your site.

Part III. Waste Management Unit Notification

Section A. Notification Type and Registration Numbers

If this is an Initial Notification, leave registration numbers blank. If updating existing Notice of Registration, provide current registration numbers.

1. Notification type (check one): ☑ Initial ☐ Update

2. Solid Waste Registration Number: _____	3. EPA Identification Number: _____
4. Customer Reference Number: CN 6 0 0 6 1 8 9 4 6	5. Regulated Entity Number: RN _____

6. Company Name: CES Environmental Services, Inc. (Port Arthur)

7. Site Name: CES Environmental Services, Inc. (Port Arthur)

Section B. Waste Management Unit Information

1. Unit Sequence Number: 0 0 2	2. Unit Type Code: 1 3 (See Appendix F)	3. Capacity:

4. Unit Description: Waste Water Tank

5. Is this unit permitted? ☐ Yes ☑ No	5a. IHW Permit No.	5b. UIC Permit No.

6. Unit Registration Status (check one): ☐ Active ☐ Inactive ☐ Not Yet Built ☑ Under Construction

7. Unit Regulatory Status (check one):

✓	Non-hazardous Regulated		Permitted Non-hazardous Industrial Unit
	UIC Permitted		UIC Registration
	RCRA Permitted Unit		RCRA Permit Exempt <90 Day Storage
	RCRA Permit Exempt - Accumulation Time		RCRA Permit Exempt - Recycling Unit per §335.24
	RCRA Permit Exempt - Totally Enclosed Treatment		RCRA Permit Exempt - Wastewater Treatment Unit

8. System Type Code (See Appendix D): H 14 H ___ H ___ H ___

9. Type of off-site waste managed in unit (check all that apply):
☑ Does Not Apply ☐ Hazardous ☐ Industrial Class 1 ☐ Industrial Class 2 ☐ Industrial Class 3

10. List the waste streams (Texas Waste Code) generated on-site and managed in this unit:
0 0 0 2 1 1 3 2

Section C. Certification of Waste Management Unit Information

I certify that the information submitted herein is complete and accurate to the best of my knowledge

Prabhakar R. Thangudu	281-433-9792
Printed Preparer's Name	Telephone Number
Prabhakar Thangudu	8-12-2008
Preparer's Signature	Date

EPAPA010000504

SEND COMPLETED FORM TO: The Appropriate State or EPA Regional Office.

United States Environmental Protection Agency

RCRA SUBTITLE C SITE IDENTIFICATION FORM

1. Reason for Submittal (See instructions on page 13.)

MARK ALL BOX(ES) THAT APPLY

Reason for Submittal:

- ☑ To provide Initial Notification of Regulated Waste Activity (to obtain an EPA ID Number for hazardous waste, universal waste, or used oil activities)
- ☐ To provide Subsequent Notification of Regulated Waste Activity (to update site identification information)
- ☐ As a component of a First RCRA Hazardous Waste Part A Permit Application
- ☐ As a component of a Revised RCRA Hazardous Waste Part A Permit Application (Amendment #_____)
- ☐ As a component of the Hazardous Waste Report

2. Site EPA ID Number (page 14)

EPA ID Number |__|__|__|__|__|__|__|__|__|__|__|__|

3. Site Name (page 14)

Name: CES Environmental Services, Inc. (Port Arthur)

4. Site Location Information (page 14)

Street Address: 2420 South Gulfway Drive

City, Town, or Village: Port Arthur **State:** TX

County Name: Jefferson **Zip Code:** 77641

5. Site Land Type (page 14)

Site Land Type: ☑ Private ☐ County ☐ District ☐ Federal ☐ Indian ☐ Municipal ☐ State ☐ Other

6. North American Industry Classification System (NAICS) Code(s) for the Site (page 14)

A. |__|__|__|__|__|__|

B. |__|__|__|__|__|__|

C. |__|__|__|__|__|__|

D. |__|__|__|__|__|__|

7. Site Mailing Address (page 15)

Street or P. O. Box: 2420 South Gulfway Drive

City, Town, or Village: Port Arthur

State: Texas

Country: USA **Zip Code:** 77641

8. Site Contact Person (page 15)

First Name: Prabhakar **MI:** R **Last Name:** Thangudu

Phone Number: 281-433-9792 **Extension:**

Email address: pthangudu@cesenvironmental.com

9. Operator and Legal Owner of the Site (pages 15 and 16)

A. Name of Site's Operator: Matt Bowman

Date Became Operator (mm/dd/yyyy): 07/01/2008

Operator Type: ☑ Private ☐ County ☐ District ☐ Federal ☐ Indian ☐ Municipal ☐ State ☐ Other

B. Name of Site's Legal Owner: La Ash, Inc.

Date Became Owner (mm/dd/yyyy): 10/18/2005

Owner Type: ☑ Private ☐ County ☐ District ☐ Federal ☐ Indian ☐ Municipal ☐ State ☐ Other

9. Legal Owner (Continued) Address	Street or P. O. Box: P.O. Box 1728	
	City, Town, or Village: Sulphur	
	State: Louisiana	
	Country: USA	Zip Code: 70664

10. Type of Regulated Waste Activity
Mark "Yes" or "No" for all activities; complete any additional boxes as instructed. (See instructions on pages 17 to 20.)

A. Hazardous Waste Activities
Complete all parts for 1 through 6.

Y☐ N☑ **1. Generator of Hazardous Waste**
If "Yes", choose only one of the following - a, b, or c.

☐ a. LQG: Greater than 1,000 kg/mo (2,200 lbs./mo.) of non-acute hazardous waste; or

☐ b. SQG: 100 to 1,000 kg/mo (220 - 2,200 lbs./mo.) of non-acute hazardous waste; or

☐ c. CESQG: Less than 100 kg/mo (220 lbs./mo.) of non-acute hazardous waste

In addition, indicate other generator activities.

Y☐ N☑ d. United States Importer of Hazardous Waste

Y☐ N☑ e. Mixed Waste (hazardous and radioactive) Generator

Y☐ N☑ **2. Transporter of Hazardous Waste**

Y☐ N☑ **3. Treater, Storer, or Disposer of Hazardous Waste (at your site)** Note: A hazardous waste permit is required for this activity.

Y☐ N☑ **4. Recycler of Hazardous Waste (at your site)**

Y☐ N☑ **5. Exempt Boiler and/or Industrial Furnace**
If "Yes", mark each that applies.
☐ a. Small Quantity On-site Burner Exemption
☐ b. Smelting, Melting, and Refining

Y☐ N☑ **6. Underground Injection Control**

B. Universal Waste Activities

Y☐ N☑ **1. Large Quantity Handler of Universal Waste (accumulate 5,000 kg or more) [refer to your State regulations to determine what is regulated]. Indicate types of universal mark all boxes that apply:**

	<u>Manage</u>
a. Batteries	☐
b. Pesticides	☐
c. Mercury containing equipment	☐
d. Lamps	☐
e. Other (specify)	☐
f. Other (specify) ____________	☐
g. Other (specify) ____________	☐

Y☐ N☑ **2. Destination Facility for Universal Waste**
Note: A hazardous waste permit may be required for this activity.

C. Used Oil Activities
Mark all boxes that apply.

Y☐ N☑ **1. Used Oil Transporter**
If "Yes", mark each that applies.
☐ a. Transporter
☐ b. Transfer Facility

Y☐ N☑ **2. Used Oil Processor and/or Re-refiner**
If "Yes", mark each that applies.
☐ a. Processor
☐ b. Re-refiner

Y☐ N☑ **3. Off-Specification Used Oil Burner**

Y☐ N☑ **4. Used Oil Fuel Marketer**
If "Yes", mark each that applies.
☐ a. Marketer Who Directs Shipment of Off-Specification Used Oil to Off-Specification Used Oil Burner
☐ b. Marketer Who First Claims the Used Oil Meets the Specifications

11. Description of Hazardous Wastes (See instructions on page 21.)

A. Waste Codes for Federally Regulated Hazardous Wastes. Please list the waste codes of the Federal hazardous wastes handled at your site. List them in the order they are presented in the regulations (e.g., D001, D003, F007, U112). Use an additional page if more spaces are needed.

B. Waste Codes for State-Regulated (i.e., non-Federal) Hazardous Wastes. Please list the waste codes of the State-regulated hazardous wastes handled at your site. List them in the order they are presented in the regulations. Use an additional page if more spaces are needed for waste codes.

12. Comments (See instructions on page 21.)

13. Certification. I certify under penalty of law that this document and all attachments were prepared under my direction or supervision in accordance with a system designed to assure that qualified personnel properly gather and evaluate the information submitted. Based on my inquiry of the person or persons who manage the system, or those persons directly responsible for gathering the information, the information submitted is, to the best of my knowledge and belief, true, accurate, and complete. I am aware that there are significant penalties for submitting false information, including the possibility of fine and imprisonment for knowing violations.
For the RCRA Hazardous Waste Part A Permit Application, all operator(s) and owner(s) must sign (see 40 CFR 270.10 (b) and 270.11). **(See instructions on page 21.)**

Signature of operator, owner, or an authorized representative	Name and Official Title (type or print)	Date Signed (mm/dd/yyyy)
[signature]	Prabhakar R. Thangudu, HSE Manager	8-12-2008

EPAPA010000507

CES Environmental Services, Inc.

October 16, 2008

Texas Commission on Environmental Quality
Registration, Review, and Reporting Division
Registration and Reporting Section, MC 129
PO Box 13087
Austin, Texas 78711-3087

Reference: TCEQ-00002, Notification for Hazardous or Industrial Waste Management

Registration and Reporting Section:

Attached is form TCEQ-00002 Update notification form for CES Environmental Services, Inc.

Should you have any questions regarding the information submitted with this letter, please contact me at 713-676-1460.

Sincerely,

Prabhakar Thangudu
HSE Manager

TCEQ Use Only
IHW_____CO

Notification For Hazardous or Industrial Waste Management

Please print or type. Definitions and codes can be found in the Hazardous or Industrial Waste Form Instructions. Changes not related to Waste Streams or Waste Management Units must be accompanied by TCEQ Core Data Form (TCEQ 10400).

Part I. General Registration Information

Section A. Notification Type and Registration Numbers

If this is an Initial Notification, leave registration numbers blank. If updating existing Notice of Registration, provide current registration numbers.

1. Notification type (check one): ☐ Initial ☑ Update

2. Solid Waste Registration Number: 88585	3. EPA Identification Number: TXR000019301
4. Customer Reference Number: CN 600618946	5. Regulated Entity Number: RN_____

Section B. Company Information

1. Company Name: CES Environmental Services, Inc.
2. Site Name: CES Environmental Services Port Arthur
3. Registration Type (check all that apply): ☑ Generator ☐ Receiver ☐ Transporter ☑ Recycler
4. Contact Information:
   Prabhakar Thangada, HSE Manager
   (First Name, Last Name, Title)
   Telephone Number: (713) 676-1460 Fax Number: (713) 676 1676 Email: pthangada@cesenvironmental.com
5. Waste Handler Status (check all that apply):
   ☐ Not Applicable ☐ Permitted TSD ☐ Interim TSD Recycler

Section C. Generator Information

If your facility does not fit the definition of a "Generator" skip to Section D

1. Generator Type (check all that apply): ☑ Industrial ☐ Non-industrial ☐ Railroad Commission

2. Hazardous Waste Generation Status (check one):		
	☑ Large Quantity Generator (LQG)	❖2,200 pounds (1,000 kilograms) or more of hazardous waste **and/or** ❖ 2.2 pounds (1 kilogram) or more of acutely hazardous waste
	☐ Small Quantity Generator (SQG)	❖between 220 and 2,200 pounds (100 and 1,000 kilograms) of hazardous waste **and** ❖ less than 2.2 pounds (1 kilogram) of acutely hazardous waste
	☐ Industrial Conditionally Exempt Small Quantity Generator (CESQG)	❖220 pounds (100 kilograms) or less of hazardous waste **and** ❖ less than 2.2 pounds (1 kilogram) of acutely hazardous waste **and** ❖220 pounds (100 kilograms) or more of industrial Class 1 waste
	☐ Universal Waste Only	❖All hazardous waste generated is classified as Universal Waste and no reportable Class 1 waste is generated at the site.

TCEQ Use Only
IHW_____CO

Section D. Receiver Information

If your facility does not fit the definition of a "Receiver" skip to Section E

1. Facility Category (check one): ☑ Commercial ☐ Captive ☐ Captured

2. Class of Waste Received for treatment, storage or disposal (check all that apply):
   ☑ Hazardous ☑ Class 1 ☑ Class 2 ☐ Class 3

3. If you receive waste from off-site and recycle it, see TCEQ Form 0524 "Notification Form for Receiving and Recycling Hazardous or Industrial Waste".

Section E. Transporter Information

If your facility does not fit the definition of a "Transporter" skip to Section F

*To Transport hazardous waste you must have an EPA identification number. See EPA RCRA Subtitle C Site Identification Form (EPA Form 8700-12).

1. Carrier Classification (answer "yes" or "no" to each question):
   a. Do you transport for hire? ☐ Yes ☐ No
   b. Do you transport your own waste? ☐ Yes ☐ No
   c. Is this site a transfer facility? ☐ Yes ☐ No

2. Types of waste transported (check all that apply):
   ☐ Hazardous* ☐ Class 1 ☐ Class 2 ☐ Class 3

Section F. Certification of Company Information

I certify that the information submitted herein is complete and accurate to the best of my knowledge

Prabhakar R. Thangudu — 713-676-1460

Printed Preparer's Name — Telephone Number

Prabhakar R Thangudu — 10-16-2025

Preparer's Signature — Date

Mail all completed registration forms

(i.e., Notification for Hazardous or Industrial Waste Management, TCEQ 00002; TCEQ Core Data Form, TCEQ 10400; EPA RCRA Subtitle C Site Identification Form, EPA Form 8700-12)

Texas Commission on Environmental Quality
Registration, Review, and Reporting Division
Registration and Reporting Section, MC 129
PO Box 13087
Austin, TX 78711-3087

If you have questions on how to fill out this form or about the Industrial and Hazardous Waste Program, please contact us at 512/239-6413. Individuals are entitled to request and review their personal information that the agency gathers on its forms. They may also have any errors in their information corrected. To review such information, contact us at 512/239-3282.

EPAPA010000510

TCEQ Use Only
IHW_____CO

Notification For Hazardous or Industrial Waste Management

Please print or type. Definitions and codes can be found in the Hazardous or Industrial Waste Form Instructions. Changes not related to Waste Streams or Waste Management Units must be accompanied by TCEQ Core Data Form (TCEQ 10400). You may copy this section as needed for each waste stream at your site.

Part II. Waste Stream Notification

Section A. Notification Type and Registration Numbers

If this is an Initial Notification, leave registration numbers blank. If updating existing Notice of Registration, provide current registration numbers.

1. Notification type (check one): ☐ Initial ☑ Update

2. Solid Waste Registration Number: 88585

3. EPA Identification Number: TXR000079307

4. Customer Reference Number: CN _____

5. Regulated Entity Number: RN _____

6. Company Name: CES Environmental Services, Inc

7. Site Name: CES Environmental Services Port Arthur

Section B. Waste Stream Information

1. Texas Waste Code: 0004 (Sequence Number) 319 (Texas Form Code (See Appendix B)) H (1) 2 3 (Class Code (Circle Class Code))

2. Waste Description and Generating Process: Class 1 solids - Inorganic, Process waste

3. Date of Generation: 09/23/2008 (Month Day Year)

4. Origin Code (check one):

✓	1. The waste was generated on-site from a product process or service activity.
	2. The waste resulted from a spill clean-up, equipment decommissioning, or emergency removal by company.
	3. The waste was derived from the on-site management of a non-hazardous waste.
	4. The waste was received from off-site and was not recycled or treated on-site.
	5. The waste was residual from the on-site treatment, disposal or recycling of previously existing hazardous waste.
	6. The waste was from a state, federal, or locally funded cleanup.
	7. The waste was from a corrective action or closure.

5. New Chemical Substance: ☐ Yes ☑ No
If you check "yes" and the waste is Class 2 or Class 3, attach copies of all information, documentation and rationale used to classify the waste.

6. Waste Management Location (check all that apply): ☐ On-site ☑ Off-site
Provide the 3-digit waste management unit sequence number for any **ON-SITE** waste management units where this waste is treated, stored or disposed. If the waste management unit is new, leave blank, and include waste stream in Part III Waste Management Unit Notification, question 9.

___ ___ ___ ___ ___ ___ ___

7. If this waste is recycled, see TCEQ Form 0525 "Generator Notification Form for Recycling Hazardous or Industrial Waste".

TCEQ Use Only
IHW_____CO

Please provide the 8-digit Texas Waste Code from Item 1 of Section B of the previous page:
0 0 0 4 3 1 9 1

If this waste is non-hazardous, skip Questions 8-13 and go to Section C. Certification of Waste Stream Information

8. EPA Hazardous Waste Numbers (EPA Codes):

____ ____ ____ ____ ____

____ ____ ____ ____ ____

9. NAICS Code:

10. Source Code (See Appendix C): G ___

11. Mixed Radioactive Waste: ☐ Yes ☐ No

12. System Type Code (See Appendix D): H ____

*Only fill out System Type Code if you selected Origin Code 5 from the previous page.

13. EPA Form Code (See Appendix E): W ____ ____ ____

Section C. Certification of Waste Stream Information

I certify that the information submitted herein is complete and accurate to the best of my knowledge.

Prabhakar R. Thangudu
Printed Preparer's Name

713-676-1460
Telephone Number

Prabhakar R Thangudu
Preparer's Name

9-23-2008
Date

TCEQ Use Only
IHW_____CO

Notification For Hazardous or Industrial Waste Management

Please print or type. Definitions and codes can be found in the Hazardous or Industrial Waste Form Instructions. Changes not related to Waste Streams or Waste Management Units must be accompanied by TCEQ Core Data Form (TCEQ 10400). You may copy this section as needed for each waste stream at your site.

Part II. Waste Stream Notification

Section A. Notification Type and Registration Numbers

If this is an Initial Notification, leave registration numbers blank. If updating existing Notice of Registration, provide current registration numbers.

1. Notification type (check one): ☐ Initial ☑ Update

2. Solid Waste Registration Number: 8 8 5 8 5

3. EPA Identification Number: TX R 0 0 0 0 7 9 3 0 7

4. Customer Reference Number: CN _____

5. Regulated Entity Number: RN _____

6. Company Name: CES Environmental Services, Inc

7. Site Name: CES Environmental Services Port Arthur

Section B. Waste Stream Information

1. Texas Waste Code: 0 0 0 5 (Sequence Number) 3 1 9 (Texas Form Code (See Appendix B)) H 1 (2) 3 (Clase Code (Circle Class Code))

2. Waste Description and Generating Process: Class 2 Solids, Process Waste

3. Date of Generation: 09/23/2008 (Month Day Year)

4. Origin Code (check one):

✓	1. The waste was generated on-site from a product process or service activity.
	2. The waste resulted from a spill clean-up, equipment decommissioning, or emergency removal by company.
	3. The waste was derived from the on-site management of a non-hazardous waste.
	4. The waste was received from off-site and was not recycled or treated on-site.
	5. The waste was residual from the on-site treatment, disposal or recycling of previously existing hazardous waste.
	6. The waste was from a state, federal, or locally funded cleanup.
	7. The waste was from a corrective action or closure.

5. New Chemical Substance: ☐ Yes ☑ No
If you check "yes" and the waste is Class 2 or Class 3, attach copies of all information, documentation and rationale used to classify the waste.

6. Waste Management Location (check all that apply): ☐ On-site ☑ Off-site
Provide the 3-digit waste management unit sequence number for any **ON-SITE** waste management units where this waste is treated, stored or disposed. If the waste management unit is new, leave blank, and include waste stream in Part III Waste Management Unit Notification, question 9.

___ ___ ___ ___ ___ ___ ___

7. If this waste is recycled, see TCEQ Form 0525 "Generator Notification Form for Recycling Hazardous or Industrial Waste".

TCEQ Use Only
IHW_____CO

Please provide the 8-digit Texas Waste Code from Item 1 of Section B of the previous page:
0 0 0 5 3 1 9 2

If this waste is non-hazardous, skip Questions 8-13 and go to Section C. Certification of Waste Stream Information

8. EPA Hazardous Waste Numbers (EPA Codes):

_____ _____ _____ _____ _____

_____ _____ _____ _____ _____

9. NAICS Code:

10. Source Code (See Appendix C): G

11. Mixed Radioactive Waste: ☐ Yes ☐ No

12. System Type Code (See Appendix D): H

*Only fill out System Type Code if you selected Origin Code 5 from the previous page.

13. EPA Form Code (See Appendix E): W

Section C. Certification of Waste Stream Information

I certify that the information submitted herein is complete and accurate to the best of my knowledge.

Prabhakar R. Thangudu
Printed Preparer's Name

713-676-1460
Telephone Number

Prabhakar R Thangudu
Preparer's Name

9-23-2008
Date

TCEQ Use Only
IHW_____CO

Notification For Hazardous or Industrial Waste Management

Please print or type. Definitions and codes can be found in the Hazardous or Industrial Waste Form Instructions. Changes not related to Waste Streams or Waste Management Units must be accompanied by TCEQ Core Data Form (TCEQ 10400). You may copy this section as needed for each waste stream at your site.

Part II. Waste Stream Notification

Section A. Notification Type and Registration Numbers

If this is an Initial Notification, leave registration numbers blank. If updating existing Notice of Registration, provide current registration numbers.

1. Notification type (check one): ☐ Initial ☑ Update

2. Solid Waste Registration Number: 88585	3. EPA Identification Number: TXR000079307
4. Customer Reference Number: CN _____	5. Regulated Entity Number: RN_____

6. Company Name: CES Environmental Services, Inc

7. Site Name: CES Environmental Services Port Arthur

Section B. Waste Stream Information

1. Texas Waste Code: 0006 (Sequence Number) 519 (Texas Form Code (See Appendix B)) H (1) 2 3 (Clase Code (Circle Class Code))

2. Waste Description and Generating Process: Class 1 Sludge - Inorganic, Process Waste

3. Date of Generation: 09/23/2008 (Month Day Year)

4. Origin Code (check one):

✓	1. The waste was generated on-site from a product process or service activity.
	2. The waste resulted from a spill clean-up, equipment decommissioning, or emergency removal by company.
	3. The waste was derived from the on-site management of a non-hazardous waste.
	4. The waste was received from off-site and was not recycled or treated on-site.
	5. The waste was residual from the on-site treatment, disposal or recycling of previously existing hazardous waste.
	6. The waste was from a state, federal, or locally funded cleanup.
	7. The waste was from a corrective action or closure.

5. New Chemical Substance: ☐ Yes ☑ No
If you check "yes" and the waste is Class 2 or Class 3, attach copies of all information, documentation and rationale used to classify the waste.

6. Waste Management Location (check all that apply): ☐ On-site ☑ Off-site
Provide the 3-digit waste management unit sequence number for any **ON-SITE** waste management units where this waste is treated, stored or disposed. If the waste management unit is new, leave blank, and include waste stream in Part III Waste Management Unit Notification, question 9.

___ ___ ___ ___ ___ ___ ___

7. If this waste is recycled, see TCEQ Form 0525 "Generator Notification Form for Recycling Hazardous or Industrial Waste".

TCEQ Use Only
IHW_____CO

Please provide the 8-digit Texas Waste Code from Item 1 of Section B of the previous page:
0 0 0 6 5 1 9 1

If this waste is non-hazardous, skip Questions 8-13 and go to Section C. Certification of Waste Stream Information

8. EPA Hazardous Waste Numbers (EPA Codes):

_____ _____ _____ _____ _____

_____ _____ _____ _____ _____

9. NAICS Code:

10. Source Code (See Appendix C): G

11. Mixed Radioactive Waste: ☐ Yes ☐ No

12. System Type Code (See Appendix D): H

*Only fill out System Type Code if you selected Origin Code 5 from the previous page.

13. EPA Form Code (See Appendix E): W

Section C. Certification of Waste Stream Information

I certify that the information submitted herein is complete and accurate to the best of my knowledge.

Prabhakar R. Thangudu	713-676-1460
Printed Preparer's Name	Telephone Number
Prabhakar R Thangudu	9-23-2008
Preparer's Name	Date

TCEQ Use Only
IHW_____CO

Notification For Hazardous or Industrial Waste Management

Please print or type. Definitions and codes can be found in the Hazardous or Industrial Waste Form Instructions. Changes not related to Waste Streams or Waste Management Units must be accompanied by TCEQ Core Data Form (TCEQ 10400). You may copy this section as needed for each waste stream at your site.

Part II. Waste Stream Notification

Section A. Notification Type and Registration Numbers

If this is an Initial Notification, leave registration numbers blank. If updating existing Notice of Registration, provide current registration numbers.

1. Notification type (check one): ☐ Initial ☑ Update

2. Solid Waste Registration Number: 88585

3. EPA Identification Number: TXR000079307

4. Customer Reference Number: CN _____

5. Regulated Entity Number: RN _____

6. Company Name: CES Environmental Services, Inc

7. Site Name: CES Environmental Services Port Arthur

Section B. Waste Stream Information

1. Texas Waste Code: 0 0 0 7 (Sequence Number) 5 1 9 (Texas Form Code (See Appendix B)) H 1 (2) 3 (Class Code (Circle Class Code))

2. Waste Description and Generating Process: Class 2 Sludge - Inorganic, Process Waste

3. Date of Generation: 09/23/2008 (Month Day Year)

4. Origin Code (check one):

✓	1. The waste was generated on-site from a product process or service activity.
	2. The waste resulted from a spill clean-up, equipment decommissioning, or emergency removal by company.
	3. The waste was derived from the on-site management of a non-hazardous waste.
	4. The waste was received from off-site and was not recycled or treated on-site.
	5. The waste was residual from the on-site treatment, disposal or recycling of previously existing hazardous waste.
	6. The waste was from a state, federal, or locally funded cleanup.
	7. The waste was from a corrective action or closure.

5. New Chemical Substance: ☐ Yes ☑ No
If you check "yes" and the waste is Class 2 or Class 3, attach copies of all information, documentation and rationale used to classify the waste.

6. Waste Management Location (check all that apply): ☐ On-site ☑ Off-site
Provide the 3-digit waste management unit sequence number for any **ON-SITE** waste management units where this waste is treated, stored or disposed. If the waste management unit is new, leave blank, and include waste stream in Part III Waste Management Unit Notification, question 9.

___ ___ ___ ___ ___ ___ ___

7. If this waste is recycled, see TCEQ Form 0525 "Generator Notification Form for Recycling Hazardous or Industrial Waste".

TCEQ Use Only
IHW_____CO

Please provide the 8-digit Texas Waste Code from Item 1 of Section B of the previous page:
0 0 0 7 5 1 9 2

If this waste is non-hazardous, skip Questions 8-13 and go to Section C. Certification of Waste Stream Information

8. EPA Hazardous Waste Numbers (EPA Codes):

_____ _____ _____ _____ _____

_____ _____ _____ _____ _____

9. NAICS Code:

10. Source Code (See Appendix C): G

11. Mixed Radioactive Waste: ☐ Yes ☐ No

12. System Type Code (See Appendix D): H

*Only fill out System Type Code if you selected Origin Code 5 from the previous page.

13. EPA Form Code (See Appendix E): W

Section C. Certification of Waste Stream Information

I certify that the information submitted herein is complete and accurate to the best of my knowledge.

Prabhakar R. Thangudu	713-676-1460
Printed Preparer's Name	Telephone Number
Prabhakar R Thangudu	9-23-2008
Preparer's Name	Date

TCEQ - N.O.V.s

Port Arthur Chemical and Environmental Services, LLC
2420 South Gulfway
Port Arthur, Texas 77640
713-676-1460 Main
713-676-1676 Fax

June 24, 2009

Mr. David Letourneau
Texas Commission on Environmental Quality
Region 10
Air Section
3870 Eastex Fwy
Beaumont, TX 77703-1830

RE: June 8, 2009 Exit Interview Form – Alleged Violations
Port Arthur Chemical and Environmental Services, Inc. (Jefferson County)
RN105156111

Mr. Letourneau:

Port Arthur Chemical and Environmental Services, Inc. (PACES) is providing the following information in response to the alleged violations referenced in the Exit Interview Form dated June 8, 2009. Each alleged violation is addressed below in the order it appeared in the Form.

1. Alleged violation: 30 TAC 106.6(b) - Failure to comply with representations submitted with the Permit by Rule Applications.

   The exit interview description is not specific about the basis for this alleged violation, but from discussions during and after the onsite investigation we understand the primary concern addressed by this item is the property line and receptor distances represented in the Permit by Rule (PBR) registration. The measurements taken by TCEQ investigators included the distance from the barge dock to the nearest property line (approximately 47 feet) and the distance from the end of a section of hose on the ground at the time of site visit to the nearest property line (approximately 55 feet). Investigators also measured from the process acid tank to the nearest property line, a distance of approximately 79 feet with the nearest off-property receptor estimated at approximately 88 feet.

   PBR Registration No. 86173 issued by TCEQ authorizes emission sources under individual permits-by-rule (PBRs) based on the type of equipment and related emissions. The PBRs addressed in the registration include 30 TAC 106.261, 106.262, 106.472, 106.475, and 106.492. Only PBRs 106.261 and 106.262 contain distance limitations applicable to certain

equipment within the process. The required minimum distance for these PBRs is 100 feet to the nearest off-property receptor measured either from the facility (i.e. tank, vessel, etc.) that is the source of the emission in the case of 106.261, or from the final emission point (i.e. flare stack) associated with the facility in the case of 106.262. The facilities and emission points authorized by PBR 106.261 and 106.262 in the TCEQ approved registration are located well over the 100 feet minimum distance requirement. The equipment authorized by PBR 106.261 (T1 Mix Reactor Vessel) is located near the rear of the process area and vents to the vapor collection system and exhausts through the flare stack. The equipment authorized by PBR 106.262 also vents to the flare stack. The flare stack is located over 200 feet from the nearest off-property receptor. Other equipment and emission points authorized under PBR 106.472 such as the process acid tank may be located closer to the nearest property line and off-property receptor, but are not required to meet a minimum distance limit.

2. Alleged violation: 30 TAC 106.472 - Failure to obtain authorization to load or unload barges.

   Attached is a PBR 106.472 from site file that covers barge unloading at PACES. The movements are inbound transfers of aqueous caustic solutions from barge to stationary tank (RV1) or to a tanker truck. Vapors from the truck trailer or RV1 are vented to the existing scrubber and flare control system.

3. Alleged violation: 30 TAC 106.6(b) - Failure to minimize emissions on inbound material transfers by using vapor balancing.

   Based on discussions during and after the investigation, we understand the issue of concern is the manner in which feed material was unloaded from tanker trucks into the process reactor vessel. When material was pumped into RV1 from a trailer the vapors from RV1 were vented to the existing scrubber and flare control system.

4. Alleged violation: 30 TAC 116.110(a) - Failure to obtain authorization before constructing and operating new Reactor Vessel Number Two, a new 1,000 gallon acid tank, and a new bleach tank.

   PACES did not operate Reactor Vessel Number Two in service for NASH Production. PACES is in the process of forwarding documentation authorizing operation of the small sulfuric acid solution tank under PBR 106.472. Authorization documentation for the 8,800 gallon bleach solution tank under PBR 106.472 is attached. These tanks are also being included in the pending NSR permit.

5. Alleged violation: 30 TAC 106.6(c) - Failure to revise the certified registration before changing the character of emissions.

   Based on discussions during and after the investigation, we understand the issue of concern here is the composition of the sulfuric acid and caustic solutions used in the process and the

change from using a hydrogen peroxide solution in the process to a bleach solution. As described in the PBR registration, the sulfuric acid and caustic solution tanks are authorized under PBR 106.472(4) – "aqueous caustic solutions, except ammonia solutions" and 106.472(5) – "inorganic acids except oleum, hydrofluoric, and hydrochloric acids". To the extent that these aqueous solutions may have higher caustic or acid concentrations than represented or contain other small amounts of constituents, these characteristics do not affect the caustic or acid nature of the solutions. PACES is preparing documentation to better clarify and authorize the handling of these materials. The use of aqueous bleach (sodium hypochlorite solution) as a reactant in the NaSH process in lieu of hydrogen peroxide does not have a consequential effect on the controlled emissions from the process. However, the bleach storage tank does represent a source of potential emissions and therefore has been authorized under 30 TAC 106.472(4) – "aqueous caustic solutions, except ammonia solutions" (see attached). The tank stores an aqueous solution of up to 15% sodium hypochlorite and 0-2% sodium hydroxide with a pH > 10. PACES is also working with the TCEQ Air Permits Division to include these representations in the pending NSR permit.

6. Alleged violation: 30 TAC 111.111(a)(4)(A)(ii) - Failure to properly maintain a flare observation log.

   We understand that the daily flare observation record must include a reference to the time of day of the observation as required by the rule. Please be aware that PACES has included time of day. Attached is a copy of a recent record showing the time reference.

PACES respectfully requests that you consider the actions that have been undertaken and call to discuss any questions you may have about the information provided above as we proceed forward.

Sincerely,

Clark G. Hickman
281-488-0848

TEXAS COMMISSION ON ENVIRONMENTAL QUALITY

DOCUMENTATION OF PERMIT-BY-RULE §106.472 AUTHORIZATION AQUEOUS CAUSTIC SOLUTION TRANSFER OPERATIONS AND EQUIPMENT (SULFIDIC CAUSTIC)

Port Arthur Chemical & Environmental Services, LLC
Port Arthur, Texas

Introduction

Port Arthur Chemical & Environmental Services, LLC (PACES) operates a sodium hydrosulfide production process under Permits-By-Rule (PBR) Registration No. 86173. This package documents the authorization to transfer sulfidic caustic from barges to stationary tank vessels or to tank trucks. The authorization is claimed under PBR 106.472 which authorizes equipment for transfer of aqueous caustic solutions to tank vessels or tank trucks. The claimed PBR authorization does not require registration with the state. However, this package must be retained on site to document the authorization for the life of the project.

Completed TCEQ forms demonstrating compliance with the conditions of the claimed PBR can be found in Appendix A. Emission calculations are located in Appendix B.

APPENDIX A
TCEQ FORMS FOR PERMIT-BY-RULE

Texas Commission on Environmental Quality
Permit by Rule Applicability Checklist
Title 30 Texas Administrative Code § 106.4

The following checklist was developed by the Texas Commission on Environmental Quality (TCEQ), **Air Permits Division**, to assist applicants in determining whether or not a facility meets all of the applicable requirements. Before claiming a specific Permit by Rule (PBR), a facility must first meet all of the requirements of **Title 30 Texas Administrative Code § 106.4** (30 TAC § 106.4), "Requirements for Permitting by Rule." Only then can the applicant proceed with addressing requirements of the specific Permit by Rule being claimed.

The use of this checklist is not mandatory; however, it is the responsibility of each applicant to show how a facility being claimed under a PBR meets the general requirements of 30 TAC § 106.4 and also the specific requirements of the PBR being claimed. If all PBR requirements cannot be met, a facility will not be allowed to operate under the PBR and an application for a construction permit may be required under 30 TAC § 116.110(a).

Registration of a facility under a PBR can be performed by completing **Form PI-7** (Registration for Permits by Rule) or **Form PI-7-CERT** (Certification and Registration for Permits by Rule). The appropriate checklist should accompany the registration form. Check the most appropriate answer and include any additional information in the spaces provided. If additional space is needed, please include an extra page and reference the question number. The PBR forms, tables, checklists and guidance documents are available from the TCEQ, Air Permits Division Web site at: **www.tceq.state.tx.us/permitting/air/nav/air_pbr.html**.

1. 30 TAC § 106.4(a)(1) & (4): Emission limits	
List emissions in tpy for **each** facility (add additional pages or table if needed): SO_2 = 0.00 PM_{10} = 0.00 VOC = <0.01 NO_x = 0.00 CO = 0.00 Other _____ = <0.01 SO_2 = _____ PM_{10} = _____ VOC = _____ NO_x = _____ CO = _____ Other _____ = _____ SO_2 = _____ PM_{10} = _____ VOC = _____ NO_x = _____ CO = _____ Other _____ = _____ **Total** 0.00 0.00 <0.01 0.00 0.00 <0.01	
• Are the SO_2, PM_{10}, VOC, or other air contaminant emissions claimed for **each** facility in this PBR submittal less than 25 tpy? • Are the NO_x and CO emissions claimed for each facility in this PBR submittal less than 250 tpy? *If the answer to both is "Yes," continue to the question below. If the answer to either question is "No," a **PBR cannot be claimed**.*	☑ YES ☐ NO ☑ YES ☐ NO
Has any facility at the property had public notice and opportunity for comment under 30 TAC Section 116 for a regular permit or permit renewal? (This does not include public notice for voluntary emission reduction permits, grandfathered existing facility permits, or federal operating permits.) *If "Yes," skip to Section 2. If "No," continue to the questions below.*	☐ YES ☑ NO
If the site has had no public notice, please answer the following: • Are the SO_2, PM_{10}, VOC, or other emissions claimed for **all** facilities in this PBR submittal less than 25 tpy? • Are the NO_x and CO emissions claimed for all facilities in this PBR submittal less than 250 tpy? *If the answer to both questions is "Yes," continue to Section 2.* *If the answer to either question is "No," **a PBR cannot be claimed**. A permit will be required under Chapter 116.*	☑ YES ☐ NO ☑ YES ☐ NO
2. 30 TAC § 106.4(a)(2): Nonattainment check	
Are the facilities to be claimed under this PBR located in a designated ozone nonattainment county? *If "Yes," please indicate which county by checking the appropriate box to the right.* (Marginal) - Hardin, Jefferson, and Orange counties *(BPA)* (Moderate) - Brazoria, Chambers, Fort Bend, Galveston, Harris, Liberty, Montgomery, and Waller counties *(HGA)* (Moderate) - Collin, Dallas, Denton, Ellis, Johnson, Kaufman, Parker, Rockwall, and Tarrant counties *(DFW)* *If "Yes," to any of the above, continue to the next question. If "No," continue to Section 3.*	☑ YES ☐ NO ☑ BPA ☐ HGA ☐ DFW

Does this project trigger a nonattainment review? To determine the answer, review the information below: • Is the project's potential to emit (PTE) for emissions of VOC or NO_x increasing by 100 tpy or more? *PTE is the maximum capacity of a stationary source to emit any air pollutant under its worst-case physical and operational design unless limited by a permit, rule, or made federally enforceable by a certification.* • Is the site an existing major nonattainment site and are the emissions of VOC or NO_x increasing by 40 tpy or more? If needed, attach contemporaneous netting calculations per nonattainment guidance. Additional information can be found at: **www.tceq.state.tx.us/permitting/air/forms/newsourcereview/tables/nsr_table8.html** and **www.tceq.state.tx.us/permitting/air/nav/air_docs_newsource.html** *If "Yes," to any of the above, the project is a major source or a major modification and **a PBR may not be used**. A Nonattainment Permit review must be completed to authorize this project. If "No," continue to Section 3.*	☐YES ☑NO ☐YES ☑NO
3. 30 TAC § 106.4(a)(3): Prevention of Significant Deterioration (PSD) check	
Does this project trigger a review under PSD rules? To determine the answer, review the information below: • Are emissions of any regulated criteria pollutant increasing by 100 tpy of any criteria pollutant at a named source? • Are emissions of any criteria pollutant increasing by 250 tpy of any criteria pollutant at an unnamed source? • Are emissions increasing above significance levels at an existing major site? PSD information can be found at: **www.tceq.state.tx.us/permitting/air/forms/newsourcereview/tables/nsr_table9.html** and **www.tceq.state.tx.us/permitting/air/nav/air_docs_newsource.html** *If "Yes," to any of the above, **a PBR may not be used**. A PSD Permit review must be completed to authorize the project. If "No," continue to Section 4.*	☐YES ☑NO ☐YES ☑NO ☐YES ☑NO
4. 30 TAC § 106.4(a)(6): Federal Requirements	
• Will all facilities under this PBR meet applicable requirements of Title 40 Code of Federal Regulations (40 CFR) Part 60, New Source Performance Standards (NSPS)? If "Yes," which Subparts are applicable?: _____ • Will all facilities under this PBR meet applicable requirements of 40 CFR Part 63, Hazardous Air Pollutants Maximum Achievable Control Technology (MACT) standards? If "Yes," which Subparts are applicable?: _____ • Will all facilities under this PBR meet applicable requirements of 40 CFR Part 61, National Emissions Standards for Hazardous Air Pollutants (NESHAPs)? If "Yes," which Subparts are applicable?: _____ *If "Yes" to any of the above, please attach a discussion of how the facilities will meet any applicable standards.*	☐YES ☐NO ☑N/A ☐YES ☐NO ☑N/A ☐YES ☐NO ☑N/A
5. 30 TAC § 106.4(a)(7): PBR prohibition check	
Are there any air permits at the site containing conditions which prohibit or restrict the use of PBRs? *If "Yes," PBRs may not be used or their use must meet the restrictions of the permit. A new permit or permit amendment may be required. **List permit number(s):**_____* *If "No," continue to Section 6.*	☐YES ☑NO

6. 30 TAC § 106.4(a)(8): NO_x Cap and Trade	
• Is the facility located in Harris, Brazoria, Chambers, Fort Bend, Galveston, Liberty, Montgomery, or Waller County? *If "Yes," answer the question below. If "No," continue to Section 7.*	☐YES ☑NO
• Will the proposed facility or group of facilities obtain required allowances for NO_x if they are subject to 30 TAC Chapter 101, Subchapter H, Division 3 (relating to the Mass Emissions Cap and Trade Program)?	☐YES ☐NO

7. Highly Reactive Volatile Organic Compounds (HRVOC) check	
• Is the facility located in Harris County? *If "Yes," answer the next question. If "No," skip to the box below.*	☐YES ☑NO
• Will the project be constructed after June 1, 2006? *If "Yes," answer the next question. If "No," skip to the box below.*	☐YES ☐NO
• Will one or more of the following HRVOC be emitted as a part of this project?	☐YES ☐NO
If "Yes," complete the information below: lb/hr tpy ▸ 1,3-butadiene _____ _____ ▸ all isomers of butene (e.g., isobutene [2-methylpropene or isobutylene]) _____ _____ ▸ alpha-butylene (ethylethylene) _____ _____ ▸ beta-butylene (dimethylethylene, including both cis- and trans-isomers) _____ _____ ▸ ethylene _____ _____ ▸ propylene _____ _____	
• Is the facility located in Brazoria, Chambers, Fort Bend, Galveston, Liberty, Montgomery, or Waller County? *If "Yes," answer the next question. If "No," the checklist is complete.*	☐YES ☑NO
• Will the project be constructed after June 1, 2006? *If "Yes," answer the next question. If "No," the checklist is complete.*	☐YES ☐NO
• Will one or more of the following HRVOC be emitted as a part of this project?	☐YES ☐NO
If "Yes," complete the information below: lb/hr tpy ▸ ethylene _____ _____ ▸ propylene _____ _____	

PRINT

Texas Commission on Environmental Quality

Exemption §106.472 Checklist
(Previously Standard Exemption 51)

Organic Liquid Loading and Unloading

The following checklist is designed to help you confirm that you meet §106.472, previously Standard Exemption 51 (STDX 51), requirements. **Any "no" answers indicate that the claim of registration may not meet all requirements for the use of Exemption §106.472, previously Standard Exemption 51.** If you do not meet all the requirements, you may alter the project design/operation in such a way that all the requirements of the exemption are met, or obtain a construction permit.

YES	NO	NA	DESCRIPTION
✓	_	_	Have you included a description of how this exemption claim meets the general rule for the use of exemptions (§106, Subchapter A checklist is available)?
✓	_	_	Are all the facilities claimed for exemption specifically named in the general section of §106.472, previously STDX 51? (This exemption has been interpreted to allow mixing or blending but not chemical reaction in tankage.)
✓	_	_	Is the equipment designed to prevent visible emissions?
✓	_	_	Are all the chemicals to be loaded, unloaded, or stored described in §106.472, previously STDX 51(a) - (i)? Attach a list of the chemicals and identify the appropriate item of §106.472, previously STDX 51 that applies. Include additional supporting data. For example, a §106.472, previously STDX 51(i), claim should identify initial boiling points of all compounds to be covered.
_	_	✓	Will aqueous ammonia solutions, hydrochloric acid, or acetic acid be vented through a water scrubber?
_	_	✓	Are facilities loading, unloading, or storing butyric acid, isobutyric acid, methacrylic acid, mercaptans, croton oil, 2-methyl styrene, or any other compound with an initial boiling point of 300 degrees F or greater listed in 40 CFR 261, Appendix VIII, located at least 500 feet from any recreational area or residence or other structure not occupied or used solely by the owner or operator of the facility or the owner of the property upon which the facility is located? List these compounds and show their handling location on an attached scaled plot plan.

APPENDIX B
EMISSION CALCULATIONS

PORT ARTHUR CHEMICAL AND ENVIRONMENTAL SERVICES, LLC
EMISSION CALCULATIONS SUMMARY

Aqueous Sulfidic Caustic						
T1 (RV-1) Loading	lb/hr	TPY	vapor wt frac	lb/hr	TPY	
Sodium Sulfide(salt)	0.1369	0.0093	0.0000	0.0000	0.0000	
Sodium Hydroxide	0.1369	0.0093	0.0000	0.0000	0.0000	
Sodium Carbonate	0.1369	0.0093	0.0000	0.0000	0.0000	
Sodium Hydrosulfide (salt)	0.1369	0.0093	0.0000	0.0000	0.0000	
Miscellaneous Organics	0.1369	0.0093	0.0009	1.25E-04	8.51E-06	
Water	0.1369	0.0093	0.9991	0.1367	0.0093	
				0.1369	**0.0093**	TOTAL

Aqueous Sulfidic Caustic						
Truck Loading	lb/hr	TPY	vapor wt frac	lb/hr	TPY	
Sodium Sulfide(salt)	0.1280	0.0313	0.0000	0.0000	0.0000	
Sodium Hydroxide	0.1280	0.0313	0.0000	0.0000	0.0000	
Sodium Carbonate	0.1280	0.0313	0.0000	0.0000	0.0000	
Sodium Hydrosulfide (salt)	0.1280	0.0313	0.0000	0.0000	0.0000	
Miscellaneous Organics	0.1280	0.0313	0.0009	1.17E-04	2.87E-05	
Water	0.1280	0.0313	0.9991	0.1278	0.0313	
				0.1280	**0.0313**	TOTAL

Total VOC	2.43E-04	lb/hr
	3.72E-05	tpy

EPAPA010000531

PORT ARTHUR CHEMICAL AND ENVIRONMENTAL SERVICES, LLC
TANK / VESSEL EMISSION CALCULATIONS

	Tank/Vessel ID:	**T1 (RV-1)**
	Material:	**Aqueous Sulfidic Caustic**
Annual Throughput, gal/yr	Q =	7,056,000
Max Hourly Transfer Rate, gal/hr	FR =	28,000
Emissions:		
Maximum Hourly Emissions, lb/hr	**Lmax =**	**0.13685**
Total Annual Emissions, TPY	**Lt =**	**0.00929**
Annual Average Hourly Emis, lb/hr	Lavg =	0.002
Standing loss, lb/yr	Ls =	0.187
Working loss, lb/yr	Lw =	18.388
Material Properties:		
Molecular Weight, lb/lb-mole	Mv =	18.01
Vapor Pressure @ Tla, psia	Pva =	0.30
Vapor Pressure @ Tln, psia	Pvn =	0.26
Vapor Pressure @ Tlx, psia	Pvx =	0.36
Max. Vapor Pressure @ mTlx, psia	Pvmax =	0.57
Tank Properties:		
Vapor control device		flare
Vapor control efficiency, %	e =	98
Capacity volume, gal	Cv =	47,966
Shell Diameter, ft	D =	10.8
Shell Height/Length, ft	Hs =	70.0
Tank Orientation (vertical or horizontal)		horiz
Roof type (cone or dome)		N/A
Tank Color (white, light gray, other)		white
Solor absorbance factor	a =	0.17
Pressure vent setting, psig	Pbp =	0.3
Vacuum vent setting, psia	Pbv =	-0.3
Effective diameter, ft	De =	31.0
Avg. Liquid Height, ft	Hl =	5.4
Max. Liquid Height, ft	Hlx =	10.8
Roof Outage, ft	Hro =	0.00
Vapor Space Outage, ft	Hvo =	5.40
Vapor space volume, ft^3	Vv =	4084.47
Operating Conditions (Houston, Tx):		
Atmospheric pressure, psia	Pa =	14.7
Annual Avg. Daily solar insulation factor, Btu/ft^2 day	I =	1351
Annual Avg. Daily max. ambient temp, R	Tax =	539.1
Annual Avg. Daily min. ambient temp, R	Tan =	517.4
Annual Avg. Daily vapor temp. range, R	^Tv =	22.1
Annual Daily avg. liquid surface temp, R	Tla =	530.1
Annual Avg. Daily min. liquid surface temp., R	Tln =	524.6
Annual Avg. Daily max. liquid surface temp., R	Tlx =	535.6
Highest Month Daily solar insulation factor, Btu/ft^2 day	mI =	1898
Highest Month Daily max. ambient temp, R	mTax =	553.6
Highest Month Daily min. ambient temp, R	mTan =	532.5
Highest Month Daily vapor temp. range, R	m^Tv =	24.2
Highest Month Daily max. liquid surface temp., R	mTlx =	551.7
Gas Constant, psia-ft^3/lb mole-R	R =	10.73
Vapor Density, lb/ft^3	Wv =	0.001
Daily vapor pressure range, psia	^Pv =	0.103
Vapor space expansion factor	Ke =	0.007
Vented vapor saturation factor	Ks =	0.920
Working Loss Product Factor	Kp =	1.00
Turnovers	N =	147.10
Turnover factor	Kn =	1.00
Operating Days, days/yr	Days =	365

PORT ARTHUR CHEMICAL AND ENVIRONMENTAL SERVICES, LLC
TANK TRUCK LOADING LOSS EMISSIONS

	Material:	Aqueous Sulfidic Caustic
Annual Throughput, gal/yr	Th =	7,056,000
Max Hourly Fill Rate, gal/hr	FR =	8,000
Emissions:		
Max Hrly Controlled Emissions, lb/hr	**llc =**	**0.0352**
Annual Controlled Emissions, TPY	**LLc =**	**0.0086**
Max Hrly Uncontrolled Emissions, lb/hr	**llu =**	**0.0927**
Annual Uncontrolled Emissions, TPY	**LLu =**	**0.0227**

Controlled Filling loss, lb/hr

llc = [(12.46 x ((S x VPx x MW) / Tx) / 1000) x FR x (c/100) x (1-e/100))]

Controlled Loading loss, TPY

LLc = [(12.46 x ((S x VPa x MW) / Ta) / 1000) x Th x (c/100) x (1-e/100))] / 2000

Uncontrolled Filling loss, lb/hr

llc = [(12.46 x ((S x VPx x MW) / Tx) / 1000) x FR x (c/100))]

Uncontrolled Loading loss, TPY

LLc = [(12.46 x ((S x VPa x MW) / Ta) / 1000) x Th x (c/100))] / 2000

Material Properties:		
Molecular Weight, lb/lb-mole	Mv =	18.01
Vapor Pressure @ Tlx, psia	Pvx =	0.57
Vapor Pressure @ Tla, psia	Pva =	0.30
Vapor control device		flare
Capture efficiency, %	c =	95
Vapor control efficiency, %	e =	98
Max Liquid Temp., R	Tlx =	551.67
Averag Liquid Temp., R	Tla =	530.08
Saturation Factor	S =	1

TEXAS COMMISSION ON ENVIRONMENTAL QUALITY

DOCUMENTATION OF PERMIT-BY-RULE §106.472 AUTHORIZATION AQUEOUS CAUSTIC SOLUTION STORAGE TANK (SODIUM HYPOCHLORITE)

Port Arthur Chemical & Environmental Services, LLC
Port Arthur, Texas

Introduction

Port Arthur Chemical & Environmental Services, LLC (PACES) operates a sodium hydrosulfide production process under Permits-By-Rule (PBR) Registration No. 86173. This package documents the authorization to construct and operate a bleach (sodium hypochlorite solution) storage tank in support of that process. The authorization is claimed under PBR 106.472 which allows the storage and loading of aqueous caustic solutions. The claimed PBR authorization does not require registration with the state. However, this package must be retained on site to document the authorization for the life of the project.

Completed TCEQ forms demonstrating compliance with the conditions of the claimed PBR can be found in Appendix A. Emission calculations are located in Appendix B.

The PACES facility is located Jefferson County, which is part of the Beaumont-Port Arthur Ozone Non-attainment area. Total emissions from this project are less than 0.01 tons per year (tpy) of Inorganic Compounds (as sodium hypochlorite).

APPENDIX A
TCEQ FORMS FOR PERMIT-BY-RULE

Texas Commission on Environmental Quality
Permit by Rule Applicability Checklist
Title 30 Texas Administrative Code § 106.4

The following checklist was developed by the Texas Commission on Environmental Quality (TCEQ), **Air Permits Division**, to assist applicants in determining whether or not a facility meets all of the applicable requirements. Before claiming a specific Permit by Rule (PBR), a facility must first meet all of the requirements of **Title 30 Texas Administrative Code § 106.4** (30 TAC § 106.4), "Requirements for Permitting by Rule." Only then can the applicant proceed with addressing requirements of the specific Permit by Rule being claimed.

The use of this checklist is not mandatory; however, it is the responsibility of each applicant to show how a facility being claimed under a PBR meets the general requirements of 30 TAC § 106.4 and also the specific requirements of the PBR being claimed. If all PBR requirements cannot be met, a facility will not be allowed to operate under the PBR and an application for a construction permit may be required under 30 TAC § 116.110(a).

Registration of a facility under a PBR can be performed by completing **Form PI-7** (Registration for Permits by Rule) or **Form PI-7-CERT** (Certification and Registration for Permits by Rule). The appropriate checklist should accompany the registration form. Check the most appropriate answer and include any additional information in the spaces provided. If additional space is needed, please include an extra page and reference the question number. The PBR forms, tables, checklists and guidance documents are available from the TCEQ, Air Permits Division Web site at: **www.tceq.state.tx.us/permitting/air/nav/air_pbr.html**.

1. 30 TAC § 106.4(a)(1) & (4): Emission limits	
List emissions in tpy for **each** facility (add additional pages or table if needed): SO_2 = 0.00 PM_{10} = 0.00 VOC = 0.00 NO_x = 0.00 CO = 0.00 Other Sodium Hypochlorite = 0.01 SO_2 = ____ PM_{10} = ____ VOC = ____ NO_x = ____ CO = ____ Other ____ = ____ SO_2 = ____ PM_{10} = ____ VOC = ____ NO_x = ____ CO = ____ Other ____ = ____ **Total** 0.00 0.00 0.00 0.00 0.00 0.01	
• Are the SO_2, PM_{10}, VOC, or other air contaminant emissions claimed for **each** facility in this PBR submittal less than 25 tpy? • Are the NO_x and CO emissions claimed for each facility in this PBR submittal less than 250 tpy? *If the answer to both is "Yes," continue to the question below. If the answer to either question is "No," a **PBR cannot be claimed.***	☑ YES ☐ NO ☑ YES ☐ NO
Has any facility at the property had public notice and opportunity for comment under 30 TAC Section 116 for a regular permit or permit renewal? (This does not include public notice for voluntary emission reduction permits, grandfathered existing facility permits, or federal operating permits.) *If "Yes," skip to Section 2. If "No," continue to the questions below.*	☐ YES ☑ NO
If the site has had no public notice, please answer the following: • Are the SO_2, PM_{10}, VOC, or other emissions claimed for **all** facilities in this PBR submittal less than 25 tpy? • Are the NO_x and CO emissions claimed for all facilities in this PBR submittal less than 250 tpy? *If the answer to both questions is "Yes," continue to Section 2.* *If the answer to either question is "No," **a PBR cannot be claimed**. A permit will be required under Chapter 116.*	☑ YES ☐ NO ☑ YES ☐ NO
2. 30 TAC § 106.4(a)(2): Nonattainment check	
Are the facilities to be claimed under this PBR located in a designated ozone nonattainment county? *If "Yes," please indicate which county by checking the appropriate box to the right.* (Marginal) - Hardin, Jefferson, and Orange counties *(BPA)* (Moderate) - Brazoria, Chambers, Fort Bend, Galveston, Harris, Liberty, Montgomery, and Waller counties *(HGA)* (Moderate) - Collin, Dallas, Denton, Ellis, Johnson, Kaufman, Parker, Rockwall, and Tarrant counties *(DFW)* *If "Yes," to any of the above, continue to the next question. If "No," continue to Section 3.*	☑ YES ☐ NO ☑ BPA ☐ HGA ☐ DFW

Does this project trigger a nonattainment review? To determine the answer, review the information below: • Is the project's potential to emit (PTE) for emissions of VOC or NO_x increasing by 100 tpy or more? *PTE is the maximum capacity of a stationary source to emit any air pollutant under its worst-case physical and operational design unless limited by a permit, rule, or made federally enforceable by a certification.* • Is the site an existing major nonattainment site and are the emissions of VOC or NO_x increasing by 40 tpy or more? If needed, attach contemporaneous netting calculations per nonattainment guidance. Additional information can be found at: **www.tceq.state.tx.us/permitting/air/forms/newsourcereview/tables/nsr_table8.html** and **www.tceq.state.tx.us/permitting/air/nav/air_docs_newsource.html** *If "Yes," to any of the above, the project is a major source or a major modification and* ***a PBR may not be used.*** *A Nonattainment Permit review must be completed to authorize this project. If "No," continue to Section 3.*	☐YES ☑NO ☐YES ☑NO
3. 30 TAC § 106.4(a)(3): Prevention of Significant Deterioration (PSD) check	
Does this project trigger a review under PSD rules? To determine the answer, review the information below: • Are emissions of any regulated criteria pollutant increasing by 100 tpy of any criteria pollutant at a named source? • Are emissions of any criteria pollutant increasing by 250 tpy of any criteria pollutant at an unnamed source? • Are emissions increasing above significance levels at an existing major site? PSD information can be found at: **www.tceq.state.tx.us/permitting/air/forms/newsourcereview/tables/nsr_table9.html** and **www.tceq.state.tx.us/permitting/air/nav/air_docs_newsource.html** *If "Yes," to any of the above,* ***a PBR may not be used.*** *A PSD Permit review must be completed to authorize the project. If "No," continue to Section 4.*	☐YES ☑NO ☐YES ☑NO ☐YES ☑NO
4. 30 TAC § 106.4(a)(6): Federal Requirements	
• Will all facilities under this PBR meet applicable requirements of Title 40 Code of Federal Regulations (40 CFR) Part 60, New Source Performance Standards (NSPS)? If "Yes," which Subparts are applicable?: _____	☐YES ☐NO ☑N/A
• Will all facilities under this PBR meet applicable requirements of 40 CFR Part 63, Hazardous Air Pollutants Maximum Achievable Control Technology (MACT) standards? If "Yes," which Subparts are applicable?: _____	☐YES ☐NO ☑N/A
• Will all facilities under this PBR meet applicable requirements of 40 CFR Part 61, National Emissions Standards for Hazardous Air Pollutants (NESHAPs)? If "Yes," which Subparts are applicable?: _____ *If "Yes" to any of the above, please attach a discussion of how the facilities will meet any applicable standards.*	☐YES ☐NO ☑N/A
5. 30 TAC § 106.4(a)(7): PBR prohibition check	
Are there any air permits at the site containing conditions which prohibit or restrict the use of PBRs? *If "Yes," PBRs may not be used or their use must meet the restrictions of the permit. A new permit or permit amendment may be required.* ***List permit number(s):*** _____ *If "No," continue to Section 6.*	☐YES ☑NO

6. 30 TAC § 106.4(a)(8): NO_x Cap and Trade	
• Is the facility located in Harris, Brazoria, Chambers, Fort Bend, Galveston, Liberty, Montgomery, or Waller County? *If "Yes," answer the question below. If "No," continue to Section 7.*	☐YES ☑NO
• Will the proposed facility or group of facilities obtain required allowances for NO_x if they are subject to 30 TAC Chapter 101, Subchapter H, Division 3 (relating to the Mass Emissions Cap and Trade Program)?	☐YES ☐NO
7. Highly Reactive Volatile Organic Compounds (HRVOC) check	
• Is the facility located in Harris County? *If "Yes," answer the next question. If "No," skip to the box below.*	☐YES ☑NO
• Will the project be constructed after June 1, 2006? *If "Yes," answer the next question. If "No," skip to the box below.*	☐YES ☐NO
• Will one or more of the following HRVOC be emitted as a part of this project?	☐YES ☐NO
If "Yes," complete the information below: lb/hr tpy ▸ 1,3-butadiene _____ _____ ▸ all isomers of butene (e.g., isobutene [2-methylpropene or isobutylene]) _____ _____ ▸ alpha-butylene (ethylethylene) _____ _____ ▸ beta-butylene (dimethylethylene, including both cis- and trans-isomers) _____ _____ ▸ ethylene _____ _____ ▸ propylene _____ _____	
• Is the facility located in Brazoria, Chambers, Fort Bend, Galveston, Liberty, Montgomery, or Waller County? *If "Yes," answer the next question. If "No," the checklist is complete.*	☐YES ☑NO
• Will the project be constructed after June 1, 2006? *If "Yes," answer the next question. If "No," the checklist is complete.*	☐YES ☐NO
• Will one or more of the following HRVOC be emitted as a part of this project?	☐YES ☐NO
If "Yes," complete the information below: lb/hr tpy ▸ ethylene _____ _____ ▸ propylene _____ _____	

PRINT

Texas Commission on Environmental Quality

Exemption §106.472 Checklist
(Previously Standard Exemption 51)

Organic Liquid Loading and Unloading

The following checklist is designed to help you confirm that you meet §106.472, previously Standard Exemption 51 (STDX 51), requirements. **Any "no" answers indicate that the claim of registration may not meet all requirements for the use of Exemption §106.472, previously Standard Exemption 51.** If you do not meet all the requirements, you may alter the project design/operation in such a way that all the requirements of the exemption are met, or obtain a construction permit.

YES	NO	NA	DESCRIPTION
✓	_	_	Have you included a description of how this exemption claim meets the general rule for the use of exemptions (§106, Subchapter A checklist is available)?
✓	_	_	Are all the facilities claimed for exemption specifically named in the general section of §106.472, previously STDX 51? (This exemption has been interpreted to allow mixing or blending but not chemical reaction in tankage.)
✓	_	_	Is the equipment designed to prevent visible emissions?
✓	_	_	Are all the chemicals to be loaded, unloaded, or stored described in §106.472, previously STDX 51(a) - (i)? Attach a list of the chemicals and identify the appropriate item of §106.472, previously STDX 51 that applies. Include additional supporting data. For example, a §106.472, previously STDX 51(i), claim should identify initial boiling points of all compounds to be covered.
_	_	✓	Will aqueous ammonia solutions, hydrochloric acid, or acetic acid be vented through a water scrubber?
_	_	✓	Are facilities loading, unloading, or storing butyric acid, isobutyric acid, methacrylic acid, mercaptans, croton oil, 2-methyl styrene, or any other compound with an initial boiling point of 300 degrees F or greater listed in 40 CFR 261, Appendix VIII, located at least 500 feet from any recreational area or residence or other structure not occupied or used solely by the owner or operator of the facility or the owner of the property upon which the facility is located? List these compounds and show their handling location on an attached scaled plot plan.

APPENDIX B
EMISSION CALCULATIONS

PORT ARTHUR CHEMICAL AND ENVIRONMENTAL
TANK EMISSION CALCULATIONS

	Tank ID:	**T2A**
	chemical	**15%**
	Material:	**Sodium Hypochlorite**
Annual Throughput, gal/yr	Q =	2,773,333
Max Hourly Transfer Rate, gal/hr	FR =	6,000
Emissions:		
Maximum Hourly Emissions, lb/hr	**Lmax =**	**1.88250**
Total Annual Emissions, TPY	**Lt =**	**0.23824**
Annual Average Hourly Emis, lb/hr	Lavg =	0.054
Standing loss, lb/yr	Ls =	11.842
Working loss, lb/yr	Lw =	464.642
Material Properties:		
Molecular Weight, lb/lb-mole	Mv =	18.14
Vapor Pressure @ Tla, psia	Pva =	0.39
Vapor Pressure @ Tln, psia	Pvn =	0.33
Vapor Pressure @ Tlx, psia	Pvx =	0.46
Max. Vapor Pressure @ mTlx, psia	Pvmax =	0.73
Tank Properties:		
Vapor control device		none
Vapor control efficiency, %	e =	0
Capacity volume, gal	Cv =	8,812
Shell Diameter, ft	D =	10.0
Shell Height/Length, ft	Hs =	15.0
Tank Orientation (vertical or horizontal)		vert
Roof type (cone or dome)		cone
Tank Color (white, light gray, other)		white
Solor absorbance factor	a =	0.17
Pressure vent setting, psig	Pbp =	0
Vacuum vent setting, psia	Pbv =	0
Effective diameter, ft	De =	10.0
Avg. Liquid Height, ft	Hl =	7.5
Max. Liquid Height, ft	Hlx =	15.0
Roof Outage, ft	Hro =	0.10
Vapor Space Outage, ft	Hvo =	7.60
Vapor space volume, ft^3	Vv =	597.23
Operating Conditions (Houston, Tx):		
Atmospheric pressure, psia	Pa =	14.7
Annual Avg. Daily solar insulation factor, Btu/ft^2 day	I =	1351
Annual Avg. Daily max. ambient temp, R	Tax =	539.1
Annual Avg. Daily min. ambient temp, R	Tan =	517.4
Annual Avg. Daily vapor temp. range, R	^Tv =	22.1
Annual Daily avg. liquid surface temp, R	Tla =	530.1
Annual Avg. Daily min. liquid surface temp., R	Tln =	524.6
Annual Avg. Daily max. liquid surface temp., R	Tlx =	535.6
Highest Month Daily solar insulation factor, Btu/ft^2 da	mI =	1898
Highest Month Daily max. ambient temp, R	mTax =	553.6
Highest Month Daily min. ambient temp, R	mTan =	532.5
Highest Month Daily vapor temp. range, R	m^Tv =	24.2
Highest Month Daily max. liquid surface temp., R	mTlx =	551.7
Gas Constant, psia-ft^3/lb mole-R	R =	10.73
Vapor Density, lb/ft^3	Wv =	0.001
Daily vapor pressure range, psia	^Pv =	0.131
Vapor space expansion factor	Ke =	0.051
Vented vapor saturation factor	Ks =	0.865
Working Loss Product Factor	Kp =	1.00
Turnovers	N =	314.72
Turnover factor	Kn =	1.00
Operating Days, days/yr	Days =	365

PORT ARTHUR CHEMICAL AND ENVIRONMENTAL SERVICES, LLC
TANK EMISSION CALCULATIONS

Sodium Hypochlorite Solution Storage speciation for component percentage					
	lb/hr	TPY	vapor wt @ Max Hourly	lb/hr	TPY
T2A	1.8825	0.2382	0.0105	0.0198	0.0025

EPAPA010000543

Daily Flare Observation Record

June 2009

FLARE REPORT

Daily Log for: Jun-09

DATE	OPERATOR/SHIFT	FLAME COLOR	SMOKE?	COMMENTS		
6/1/2009						
6/2/2009	Did Not Run					
6/3/2009						
6/4/2009	Did not Run					
6/5/2009	Jay Matlock	Clear	NO			8:30A
6/6/2009	Did NOT Run					
6/7/2009	Did not Run					
6/8/2009	Ky Gall	Clear	NO	Clear Clean Flame		7:15A
6/9/2009	Ky Gall	Clear Blue	NO	Clear Clean Flame		7:30A
6/10/2009	Ky Gall	Clear	NO			7:30A
6/11/2009	Michael Rudd	Clear	NO	clear ~~to~~ ~~[illegible]~~ Flame		7:30A
6/12/2009	Did not Run					
6/13/2009	Did not Run					
6/14/2009	Did not Run					
6/15/2009	Michael Rudd	clear	none	Clear to	blue	7:30A
6/16/2009	Michael Rudd	Clear	None			7:30A
6/17/2009	Michael Rudd	Clear	none	Clear to	blue	7:30A
6/18/2009	DNR					
6/19/2009	DNR					
6/20/2009	DNR					
6/21/2009	DNR					
6/22/2009	DNR					
6/23/2009						
6/24/2009						
6/25/2009						
6/26/2009						
6/27/2009						
6/28/2009						
6/29/2009						
6/30/2009						

EPAPA010000545

Buddy Garcia, *Chairman*
Larry R. Soward, *Commissioner*
Bryan W. Shaw, Ph.D., *Commissioner*
Mark R. Vickery, P.G., *Executive Director*

TEXAS COMMISSION ON ENVIRONMENTAL QUALITY

Protecting Texas by Reducing and Preventing Pollution

March 4, 2009

CERTIFIED MAIL – 7001 0320 0004 8873 0207
RETURN RECEIPT REQUESTED

Mr. Matt Bowman
President
Port Arthur Chemical & Environmental Services
2420 Gulfway Drive
Port Arthur, Texas 77640

Re: Notice of Violation for the Complaint Investigation at:
Port Arthur Chemical & Environmental Services, 2420 Gulfway Drive, Port Arthur (Jefferson County), Texas
Investigation No.: 707677
TCEQ ID No.: RN105156111

Dear Bowman:

On November 4, 2008, Mr. Chris Megas of the Texas Commission on Environmental Quality (TCEQ) Beaumont Region Office conducted an investigation of the above-referenced facility to evaluate compliance with applicable requirements for air quality. Enclosed is a summary which lists the investigation findings. In addition, certain outstanding alleged violations were identified for which compliance documentation is required. Please submit to this office by April 6, 2009, a written description of corrective action taken and the required documentation demonstrating that compliance has been achieved for each of the outstanding alleged violations.

In the listing of alleged violations, we have cited applicable requirements, including TCEQ rules. If you would like to obtain a copy of the applicable TCEQ rules, you may contact any of the sources listed in the enclosed brochure entitled *Obtaining TCEQ Rules.*

The TCEQ appreciates your assistance in this matter. Please note that the Legislature has granted TCEQ enforcement powers which we may exercise to ensure compliance with environmental regulatory requirements. We anticipate that you will resolve the alleged violations as required in order to protect the State's environment. If you have additional information that we are unaware of, you have the opportunity to contest the violation(s) documented in this notice. Should you choose to do so, you must notify the Beaumont Region Office within 10 days from the date of this letter. At that time, a violation review meeting will be

scheduled. However, please be advised that, if you decide to participate in the violation review process, the TCEQ may still require you to adhere to the compliance schedule included in the attached Summary of Investigation Findings until an official decision is made regarding the status of any or all of the contested violations.

If you or members of your staff have any questions, please feel free to contact Mr. Megas in the Beaumont Region Office at (409) 898-3838.

Sincerely,

KBSaucedo

for Heather Ross
Manager, Air Section
Beaumont Region Office

HR/pbv

Enclosures: Summary of Investigation Findings
Obtaining TCEQ Rules

Summary of Investigation Findings

PORT ARTHUR CHEMICAL & ENVIRONMENTAL SERVICES	Investigation # 707677
2420 GULFWAY DR	Investigation Date: 11/04/2008
PORT ARTHUR, JEFFERSON COUNTY, TX 77640	
Additional ID(s): 86173	

OUTSTANDING ALLEGED VIOLATION(S) ASSOCIATED TO A NOTICE OF VIOLATION

Track No: 352943 **Compliance Due Date: 04/06/2009**
30 TAC Chapter 111.111(a)(4)(A)(ii)
5C THSC Chapter 382.085(b)

Alleged Violation:
Investigation: 707677 Comment Date: 12/19/2008

Failure to properly maintain a flare observation log.

Title 30 Texas Administrative Code (TAC) 111.111(a)(4)(A)(ii) states that beginning September 1, 1993, compliance for process gas flares shall be determined by a daily notation in the flare operation log that the flare was observed, including the time of day and whether or not the flare was smoking, with the flare operator recording at least 98% of the required observations.

For the 31 days the facility's flare was in operation during the period of September 22, 2008, to November 30, 2008, the investigator documented the regulated entity had failed to document the time of the flare observations.

Recommended Corrective Action: Submit a written plan necessary to address the outstanding alleged violation to prevent recurrence of same or similar incidents.

Track No: 352946 **Compliance Due Date: 04/06/2009**
30 TAC Chapter 111.111(a)(4)(A)
5C THSC Chapter 382.085(b)

Alleged Violation:
Investigation: 707677 Comment Date: 12/19/2008

Failure to properly operate the facility flare, Emission Point Number (EPN) FL1.

30 TAC Chapter 111.111(a)(4)(A) states that visible emissions from a process gas flare shall not be permitted for more than five minutes in any two-hour period.

On November 4, 2008, from 14:29:38 to 14:51:20 hours, the investigator documented that the facility flare (EPN: FL1) smoked for a continuous period of twenty-one (21) minutes and forty-two (42) seconds.

Recommended Corrective Action: Submit a written plan necessary to address the outstanding alleged violation to prevent recurrence of same or similar incidents.

EPAPA010000548

Buddy Garcia, *Chairman*
Larry R. Soward, *Commissioner*
Bryan W. Shaw, Ph.D., *Commissioner*
Mark R. Vickery, P.G., *Executive Director*

TEXAS COMMISSION ON ENVIRONMENTAL QUALITY

Protecting Texas by Reducing and Preventing Pollution

March 4, 2009

CERTIFIED MAIL – 7001 0320 0004 8873 0214
RETURN RECEIPT REQUESTED

Mr. Keld Anderson
Plant Manager
Port Arthur Chemical & Environmental Services
2420 South Gulfway Drive
Port Arthur, Texas 77640

Re: Notice of Violation for the Complaint Investigation at:
Port Arthur Chemical & Environmental Services, 2420 South Gulfway Drive, Port Arthur (Jefferson County), Texas
Investigation No.: 720930
TCEQ ID No.: RN105156111

Dear Mr. Anderson:

On December 8, 2008, Mr. John Cotton of the Texas Commission on Environmental Quality (TCEQ) Beaumont Region Office conducted an investigation of the above-referenced facility to evaluate compliance with applicable requirements for air quality. Enclosed is a summary which lists the investigation findings. In addition, certain outstanding alleged violations were identified for which compliance documentation is required. Please submit to this office by April 6, 2009, a written description of corrective action taken and the required documentation demonstrating that compliance has been achieved for each of the outstanding alleged violations.

In the listing of alleged violations, we have cited applicable requirements, including TCEQ rules. If you would like to obtain a copy of the applicable TCEQ rules, you may contact any of the sources listed in the enclosed brochure entitled *Obtaining TCEQ Rules.*

The TCEQ appreciates your assistance in this matter. Please note that the Legislature has granted TCEQ enforcement powers which we may exercise to ensure compliance with environmental regulatory requirements. We anticipate that you will resolve the alleged violations as required in order to protect the State's environment. If you have additional information that we are unaware of, you have the opportunity to contest the violation(s) documented in this notice. Should you choose to do so, you must notify the Beaumont Region Office within 10 days from the date of this letter. At that time, a violation review meeting will be

scheduled. However, please be advised that, if you decide to participate in the violation review process, the TCEQ may still require you to adhere to the compliance schedule included in the attached Summary of Investigation Findings until an official decision is made regarding the status of any or all of the contested violations.

If you or members of your staff have any questions, please feel free to contact Mr. Cotton in the Beaumont Region Office at (409) 898-3838.

Sincerely,

Heather Ross

Heather Ross
Manager, Air Section
Beaumont Region Office

HR/pbv

Enclosures: Summary of Investigation Findings
Obtaining TCEQ Rules

Summary of Investigation Findings

PORT ARTHUR CHEMICAL & ENVIRONMENTAL SERVICES	Investigation # 720930
2420 GULFWAY DR	Investigation Date: 12/08/2008
PORT ARTHUR, JEFFERSON COUNTY, TX 77640	
Additional ID(s): 86587 86958	

OUTSTANDING ALLEGED VIOLATION(S) ASSOCIATED TO A NOTICE OF VIOLATION

Track No: 352859 **Compliance Due Date: 04/06/2009**
30 TAC Chapter 101.4
5C THSC Chapter 382.085(b)

Alleged Violation:
Investigation: 720930 Comment Date: 12/18/2008

Failure to prevent nuisance conditions.

Title 30 Texas Administrative Code (TAC) 101.4 states that no person shall discharge from any source whatsoever one or more air contaminants or combinations thereof, in such concentration and of such duration as are or may tend to be injurious to or to adversely affect human health or welfare, animal life, vegetation, or property, or as to interfere with the normal use and enjoyment of animal life, vegetation, or property.

On December 8, 2008, the investigator documented offensive odors that were moderate in intensity while at business property adjacent to and downwind from operations being conducted by Port Arthur Chemical and Environmental Services, INC (CES). The emissions from CES interfered with the normal use and enjoyment of the property as well as causing adverse effects to human health. The regulated entity failed to prevent nuisance conditions while cleaning equipment after an upset.

Recommended Corrective Action: Take actions necessary to prevent recurrence of the same or similar violation.

EPAPA010000551

Buddy Garcia, *Chairman*
Larry R. Soward, *Commissioner*
Bryan W. Shaw, Ph.D., *Commissioner*
Mark R. Vickery, P.G., *Executive Director*

TEXAS COMMISSION ON ENVIRONMENTAL QUALITY

Protecting Texas by Reducing and Preventing Pollution

March 4, 2009

CERTIFIED MAIL – 7001 0320 0004 8873 0221
RETURN RECEIPT REQUESTED

Mr. Keld Andersen
Plant Manager
Port Arthur Chemical & Environmental Services
2420 South Gulfway Drive
Port Arthur, Texas 77640

Re: Notice of Violation for the Complaint Investigation at:
Port Arthur Chemical & Environmental Services, 2420 South Gulfway Drive, Port Arthur (Jefferson County), Texas
Investigation No.: 721809
TCEQ ID No.: RN105156111

Dear Mr. Andersen:

On December 12, 2008, Ms. Jessica Gary of the Texas Commission on Environmental Quality (TCEQ) Beaumont Region Office conducted an investigation of the above-referenced facility to evaluate compliance with applicable requirements for air quality. Enclosed is a summary which lists the investigation findings. In addition, certain outstanding alleged violations were identified for which compliance documentation is required. Please submit to this office by April 6, 2009, a written description of corrective action taken and the required documentation demonstrating that compliance has been achieved for each of the outstanding alleged violations.

In the listing of alleged violations, we have cited applicable requirements, including TCEQ rules. If you would like to obtain a copy of the applicable TCEQ rules, you may contact any of the sources listed in the enclosed brochure entitled *Obtaining TCEQ Rules.*

The TCEQ appreciates your assistance in this matter. Please note that the Legislature has granted TCEQ enforcement powers which we may exercise to ensure compliance with environmental regulatory requirements. We anticipate that you will resolve the alleged violations as required in order to protect the State's environment. If you have additional information that we are unaware of, you have the opportunity to contest the violation(s) documented in this notice. Should you choose to do so, you must notify the Beaumont Region Office within 10 days from the date of this letter. At that time, a violation review meeting will be

scheduled. However, please be advised that, if you decide to participate in the violation review process, the TCEQ may still require you to adhere to the compliance schedule included in the attached Summary of Investigation Findings until an official decision is made regarding the status of any or all of the contested violations.

If you or members of your staff have any questions, please feel free to contact Ms. Gary in the Beaumont Region Office at (409) 898-3838.

Sincerely,

Heather Ross
Manager, Air Section
Beaumont Region Office

HR/pbv

Enclosures: Summary of Investigation Findings
Obtaining TCEQ Rules

Summary of Investigation Findings

PORT ARTHUR CHEMICAL & ENVIRONMENTAL SERVICES	Investigation # 721809
2420 GULFWAY DR	Investigation Date: 12/12/2008
PORT ARTHUR, JEFFERSON COUNTY, TX 77640	
Additional ID(s): 86587 86173	

OUTSTANDING ALLEGED VIOLATION(S) ASSOCIATED TO A NOTICE OF VIOLATION

Track No: 352839 **Compliance Due Date: 04/06/2009**
30 TAC Chapter 101.4
5C THSC Chapter 382.085(b)

Alleged Violation:
Investigation: 721809 Comment Date: 12/19/2008

Failure to prevent nuisance conditions.

30 Texas Administrative Code (TAC) 101.4 states that no person shall discharge from any source whatsoever one or more air contaminants or combinations thereof, in such concentration and of such duration as are or may tend to be injurious to or to adversely affect human health or welfare, animal life, vegetation, or property, or as to interfere with the normal use and enjoyment of animal life, vegetation, or property.

On December 12, 2008, the investigator documented very strong, highly offensive odors at the complainant's location. The investigator determined that the odors were emanating from Port Arthur Chemical and Environmental Services. The odor interfered with the normal use and enjoyment of property located north of the operations and caused ill health affects.

Recommended Corrective Action: Take the actions neccessary to prevent recurrance of the same or similar violations.

EPAPA010000554

TCEQ Visits

EPAPA010000555

Buddy Garcia, *Chairman*
Larry R. Soward, *Commissioner*
Bryan W. Shaw, Ph.D., *Commissioner*
Mark R. Vickery, P.G., *Executive Director*

TEXAS COMMISSION ON ENVIRONMENTAL QUALITY

Protecting Texas by Reducing and Preventing Pollution

June 9, 2009

Mr. Matt Bowman
President
Port Arthur Chemical & Environmental Services
PO Box 218
Port Arthur, Texas 77641-0218

Re: Complaint Investigation at: Port Arthur Chemical & Environmental Services, 2420 South Gulfway Drive, Port Arthur (Jefferson County), Texas
Incident No.: 123216
TCEQ ID No.: RN105156111

Dear Mr. Bowman:

On April 23, 2009, Ms. Pratima Singh and Ms. Neadra Richard with the Texas Commission on Environmental Quality (TCEQ) Beaumont Region Office conducted an investigation at the above-referenced location in response to a complaint regarding odors. No violations were documented during the investigation.

If you have any questions or concerns regarding this matter, please contact Ms. Singh in the Beaumont Region Office at (409) 898-3838.

Sincerely,

Heather Ross
Manager, Air Section
Beaumont Region Office

HR/pbv

REPLY TO: REGION 10 • 3870 EASTEX FWY. • BEAUMONT, TEXAS 77703-1830 • 409-898-3838 • FAX 409-892-2119

P.O. Box 13087 • Austin, Texas 78711-3087 • 512-239-1000 • Internet address: www.tceq.state.tx.us

printed on recycled paper using soy-based ink

Please print or type. (Form designed for use on elite (12-pitch) typewriter.)

Form Approved. OMB No. 2050-0039

UNIFORM HAZARDOUS WASTE MANIFEST

1. Generator ID Number
2. Page 1 of
3. Emergency Response Phone (409) 985-4200
4. Manifest Tracking Number **005595474 JJK**

5. Generator's Name and Mailing Address
KMTEX State ID 23491
PO Box 1421
Port Arthur, TX 77641
(409) 985-4200
Generator's Phone:

Generator's Site Address (if different than mailing address)
2450 South Gulfway Drive
Port Arthur, TX 77641
(409) 985-4200

6. Transporter 1 Company Name
Environmental Services, Inc. State ID 30500
U.S. EPA ID Number TXD008950461

7. Transporter 2 Company Name
U.S. EPA ID Number

8. Designated Facility Name and Site Address
Waste Management of Texas, LLC State ID 39090
22400 Wilber Rd
Winnie TX 77665
Facility's Phone: (409) 724-3119
U.S. EPA ID Number N/A

9a. HM	9b. U.S. DOT Description (including Proper Shipping Name, Hazard Class, ID Number, and Packing Group (if any))	10. Containers No.	10. Containers Type	11. Total Quantity	12. Unit Wt./Vol.	13. Waste Codes	
	Non-RCRA Wastewater (General Plant Wastewater)	1	TT	41512	P	1000191	
	2.						
	3.						
	4.						

14. Special Handling Instructions and Additional Information
Folder ID: KMTEX (KMTEX - Port Arthur, TX)
Reg Non-Haz Wastewater
Please write corresponding shipment Form Trans ticket
1) 041303998H 6/3940 2) 8/39692 3) 4) 32/93942

15. **GENERATOR'S/OFFEROR'S CERTIFICATION:** I hereby declare that the contents of this consignment are fully and accurately described above by the proper shipping name, and are classified, packaged, marked and labeled/placarded, and are in all respects in proper condition for transport according to applicable international and national governmental regulations. If export shipment and I am the Primary Exporter, I certify that the contents of this consignment conform to the terms of the attached EPA Acknowledgment of Consent.
I certify that the waste minimization statement identified in 40 CFR 262.27(a) (if I am a large quantity generator) or (b) (if I am a small quantity generator) is true.

Generator's/Offeror's Printed/Typed Name: L Jamison
Signature: L Jamison
Month 4 Day 27 Year 09

GENERATOR

INT'L

16. International Shipments ☐ Import to U.S. ☐ Export from U.S. Port of entry/exit:
Transporter signature (for exports only): Date leaving U.S.:

TRANSPORTER

17. Transporter Acknowledgment of Receipt of Materials
Transporter 1 Printed/Typed Name: WILFRIDO ABREU
Signature:
Month 04 Day 27 Year 09
Transporter 2 Printed/Typed Name
Signature
Month Day Year

DESIGNATED FACILITY

18. Discrepancy
18a. Discrepancy Indication Space ☐ Quantity ☐ Type ☐ Residue ☐ Partial Rejection ☐ Full Rejection
Manifest Reference Number:
18b. Alternate Facility (or Generator)
U.S. EPA ID Number
Facility's Phone:
18c. Signature of Alternate Facility (or Generator)
Month Day Year

19. Hazardous Waste Report Management Method Codes (i.e., codes for hazardous waste treatment, disposal, and recycling systems)
1. H134 2. 3. 4.

20. Designated Facility Owner or Operator: Certification of receipt of hazardous materials covered by the manifest except as noted in Item 18a
Printed/Typed Name: Vicki Hopper
Signature:
Month 4 Day 27 Year 09

EPA Form 8700-22 (Rev. 3-05) Previous editions are obsolete.

TRANSPORTER'S COPY

EPAPA010000557

Please print or type. (Form designed for use on elite (12-pitch) typewriter.)

Form Approved. OMB No. 2050-0039

UNIFORM HAZARDOUS WASTE MANIFEST

1. Generator ID Number: 23491
2. Page 1 of 1
3. Emergency Response Phone: (409) 985-4200
4. Manifest Tracking Number: 005595473 JJK

GENERATOR

5. Generator's Name and Mailing Address: KMTEX State ID: 23491
PO Box 1421
Port Arthur, TX 77641
Generator's Phone: (409) 985-4200

Generator's Site Address (if different than mailing address): KMTEX
2950 South Gulfway Drive
Port Arthur, TX 77641
(409) 985-4200

6. Transporter 1 Company Name: CES Environmental Services, Inc. State ID: 30000
U.S. EPA ID Number: TXD008950461

7. Transporter 2 Company Name
U.S. EPA ID Number

8. Designated Facility Name and Site Address: Newport Environmental Services, LLC State ID: 30050
26400 Wilker Rd
Winnie TX, 77665
Facility's Phone: (409) 794-3119
U.S. EPA ID Number: N/A

9a. HM	9b. U.S. DOT Description (including Proper Shipping Name, Hazard Class, ID Number, and Packing Group (if any))	10. Containers No.	10. Containers Type	11. Total Quantity	12. Unit Wt./Vol.	13. Waste Codes		
	Non-RCRA Wastewater (General Plant Wastewater)	1	TT	4950	P	1000101		
	2.							
	3.							
	4.							

14. Special Handling Instructions and Additional Information
Folder ID: KMTEX (KMTEX - Port Arthur - TX) Please write corresponding bill from Trans ticket
Reg Non-Haz Wastewater
1) 04180305668H 2) 6)35410 8)39098 4) 4951 gal

15. **GENERATOR'S/OFFEROR'S CERTIFICATION:** *I hereby declare that the contents of this consignment are fully and accurately described above by the proper shipping name, and are classified, packaged, marked and labeled/placarded, and are in all respects in proper condition for transport according to applicable international and national governmental regulations. If export shipment and I am the Primary Exporter, I certify that the contents of this consignment conform to the terms of the attached EPA Acknowledgment of Consent.*
I certify that the waste minimization statement identified in 40 CFR 262.27(a) (if I am a large quantity generator) or (b) (if I am a small quantity generator) is true.

Generator's/Offeror's Printed/Typed Name: [illegible] Signature: [illegible] Month: 11 Day: [illegible] Year: 09

INT'L

16. International Shipments ☐ Import to U.S. ☐ Export from U.S. Port of entry/exit:
Transporter signature (for exports only): Date leaving U.S.:

TRANSPORTER

17. Transporter Acknowledgment of Receipt of Materials
Transporter 1 Printed/Typed Name: WILFRIDO ABREU Signature: [illegible] Month: 04 Day: 27 Year: 09
Transporter 2 Printed/Typed Name: Signature: Month: Day: Year:

DESIGNATED FACILITY

18. Discrepancy
18a. Discrepancy Indication Space ☐ Quantity ☐ Type ☐ Residue ☐ Partial Rejection ☐ Full Rejection
Manifest Reference Number:
18b. Alternate Facility (or Generator) U.S. EPA ID Number
Facility's Phone:
18c. Signature of Alternate Facility (or Generator) Month: Day: Year:

19. Hazardous Waste Report Management Method Codes (i.e., codes for hazardous waste treatment, disposal, and recycling systems)
1. H134 2. 3. 4.

20. Designated Facility Owner or Operator: Certification of receipt of hazardous materials covered by the manifest except as noted in Item 18a
Printed/Typed Name: Michael Bauer Signature: [illegible] Month: 4 Day: 27 Year: 09

EPA Form 8700-22 (Rev. 3-05) Previous editions are obsolete.

TRANSPORTER'S COPY

EPAPA010000558

Please print or type. (Form designed for use on elite (12-pitch) typewriter.) Form Approved. OMB No. 2050-0039

UNIFORM HAZARDOUS WASTE MANIFEST

1. Generator ID Number: 23491
2. Page 1 of 1
3. Emergency Response Phone: (409) 985-4200
4. Manifest Tracking Number: 005595472 JJK

5. Generator's Name and Mailing Address
KMTEX State ID 23491
PO Box 1421
Port Arthur, TX 77641
Generator's Phone: (409) 985-4200

Generator's Site Address (if different than mailing address)
KMTEX
2450 South Gulfway Drive
Port Arthur, TX 77641
(409) 985-4200

6. Transporter 1 Company Name: LES Environmental Services, Inc. State ID 30000 U.S. EPA ID Number: TXD008950461

7. Transporter 2 Company Name U.S. EPA ID Number

8. Designated Facility Name and Site Address
Newark Environmental Services LLC State ID 19090
25400 Wilber Rd
Winnie TX, 77665
Facility's Phone: (409) 794-3119
U.S. EPA ID Number: N/A

9a. HM	9b. U.S. DOT Description (including Proper Shipping Name, Hazard Class, ID Number, and Packing Group (if any))	10. Containers No.	10. Containers Type	11. Total Quantity	12. Unit Wt./Vol.	13. Waste Codes
	Non-RCRA Wastewater (General Plant Wastewater)	1	TT	47200	P	10002101
	2.					
	3.					
	4.					

14. Special Handling Instructions and Additional Information
Please write corresponding job# from Trans ticket
Reg Non-Haz Wastewater
1) 04180503998H 2) 6130900 3) 851098 4) 567908

15. **GENERATOR'S/OFFEROR'S CERTIFICATION:** I hereby declare that the contents of this consignment are fully and accurately described above by the proper shipping name, and are classified, packaged, marked and labeled/placarded, and are in all respects in proper condition for transport according to applicable international and national governmental regulations. If export shipment and I am the Primary Exporter, I certify that the contents of this consignment conform to the terms of the attached EPA Acknowledgment of Consent.
I certify that the waste minimization statement identified in 40 CFR 262.27(a) (if I am a large quantity generator) or (b) (if I am a small quantity generator) is true.

Generator's/Offeror's Printed/Typed Name: R Jamison Signature: R Jamison Month 4 Day 27 Year 09

16. International Shipments ☐ Import to U.S. ☐ Export from U.S. Port of entry/exit:
Transporter signature (for exports only): Date leaving U.S.:

17. Transporter Acknowledgment of Receipt of Materials
Transporter 1 Printed/Typed Name: WILFRIDO ABREU Signature: Month 04 Day 27 Year 09
Transporter 2 Printed/Typed Name Signature Month Day Year

18. Discrepancy
18a. Discrepancy Indication Space ☐ Quantity ☐ Type ☐ Residue ☐ Partial Rejection ☐ Full Rejection
Manifest Reference Number:
18b. Alternate Facility (or Generator) U.S. EPA ID Number
Facility's Phone:
18c. Signature of Alternate Facility (or Generator) Month Day Year

19. Hazardous Waste Report Management Method Codes (i.e., codes for hazardous waste treatment, disposal, and recycling systems)
1. H134 2. 3. 4.

20. Designated Facility Owner or Operator: Certification of receipt of hazardous materials covered by the manifest except as noted in Item 18a
Printed/Typed Name: Vicki Hoffmeier Signature: Month 04 Day 27 Year 09

GENERATOR | INT'L | TRANSPORTER | DESIGNATED FACILITY

EPA Form 8700-22 (Rev. 3-05) Previous editions are obsolete. **TRANSPORTER'S COPY**

EPAPA010000559

Please print or type. (Form designed for use on elite (12-pitch) typewriter.) Form Approved. OMB No. 2050-0039

UNIFORM HAZARDOUS WASTE MANIFEST

1. Generator ID Number: TXR000079307
2. Page 1 of 1
3. Emergency Response Phone
4. Manifest Tracking Number: 005593101 JJK

GENERATOR

5. Generator's Name and Mailing Address: CES Environmental Services - Port Arthur, 4904 Griggs Road, Houston, TX 77021 — State ID: 88585
Generator's Site Address (if different than mailing address): CES Environmental Services - Port Arthur, 2420 Gulfway Drive, Port Arthur, TX 77640
Generator's Phone:

6. Transporter 1 Company Name: CES Environmental Services, Inc. — State ID: 10930 — U.S. EPA ID Number: TXD008950461

7. Transporter 2 Company Name — U.S. EPA ID Number:

8. Designated Facility Name and Site Address: Waste Environmental Services LLC, 2540 Weber Rd, Winnie TX 77665 — State ID: 92026 — U.S. EPA ID Number: NA
Facility's Phone: (409) 294-3119

9a. HM	9b. U.S. DOT Description (including Proper Shipping Name, Hazard Class, ID Number, and Packing Group (if any))	10. Containers No.	10. Containers Type	11. Total Quantity	12. Unit Wt./Vol.	13. Waste Codes
	1. Non-RCRA/Non DOT regulated wastewater	1	TT	5	G	D001 D31
	2.					
	3.					
	4.					

14. Special Handling Instructions and Additional Information
Profile ID: CES Environmental Services - Port Arthur — CES Job #: 88585
Class 1 Nonhazardous Wastewater
1) 000091860JH 1) 88585 2) 2040 3) 29098 4) 49 Gal

15. **GENERATOR'S/OFFEROR'S CERTIFICATION:** I hereby declare that the contents of this consignment are fully and accurately described above by the proper shipping name, and are classified, packaged, marked and labeled/placarded, and are in all respects in proper condition for transport according to applicable international and national governmental regulations. If export shipment and I am the Primary Exporter, I certify that the contents of this consignment conform to the terms of the attached EPA Acknowledgment of Consent.
I certify that the waste minimization statement identified in 40 CFR 262.27(a) (if I am a large quantity generator) or (b) (if I am a small quantity generator) is true.

Generator's/Offeror's Printed/Typed Name: Jake Nowlin — Signature: [signature] — Month 04 Day 28 Year 09

INT'L

16. International Shipments ☐ Import to U.S. ☐ Export from U.S. Port of entry/exit:
Transporter signature (for exports only): Date leaving U.S.:

TRANSPORTER

17. Transporter Acknowledgment of Receipt of Materials
Transporter 1 Printed/Typed Name: Jake Norton — Signature: [signature] — Month 4 Day 28 Year 09
Transporter 2 Printed/Typed Name — Signature — Month Day Year

DESIGNATED FACILITY

18. Discrepancy
18a. Discrepancy Indication Space ☐ Quantity ☐ Type ☐ Residue ☐ Partial Rejection ☐ Full Rejection
Manifest Reference Number:
18b. Alternate Facility (or Generator) — U.S. EPA ID Number
Facility's Phone:
18c. Signature of Alternate Facility (or Generator) — Month Day Year

19. Hazardous Waste Report Management Method Codes (i.e., codes for hazardous waste treatment, disposal, and recycling systems)
1. H134 2. 3. 4.

20. Designated Facility Owner or Operator: Certification of receipt of hazardous materials covered by the manifest except as noted in Item 18a
Printed/Typed Name: Mike Hoffman — Signature: [signature] — Month 4 Day 30 Year 09

EPA Form 8700-22 (Rev. 3-05) Previous editions are obsolete. **TRANSPORTER'S COPY**

EPAPA010000560

Please print or type. (Form designed for use on elite (12-pitch) typewriter.)

Form Approved. OMB No. 2050-0039

UNIFORM HAZARDOUS WASTE MANIFEST

1. Generator ID Number: TXR000079207
2. Page 1 of
3. Emergency Response Phone
4. Manifest Tracking Number: **005593102 JJK**

GENERATOR

5. Generator's Name and Mailing Address
Generator's Site Address (if different than mailing address)
Generator's Phone:

6. Transporter 1 Company Name
U.S. EPA ID Number

7. Transporter 2 Company Name
U.S. EPA ID Number

8. Designated Facility Name and Site Address
U.S. EPA ID Number
Facility's Phone:

9a. HM	9b. U.S. DOT Description (including Proper Shipping Name, Hazard Class, ID Number, and Packing Group (if any))	10. Containers No.	10. Containers Type	11. Total Quantity	12. Unit Wt./Vol.	13. Waste Codes
	1.			5233		
	2.					
	3.					
	4.					

14. Special Handling Instructions and Additional Information

15. **GENERATOR'S/OFFEROR'S CERTIFICATION:** I hereby declare that the contents of this consignment are fully and accurately described above by the proper shipping name, and are classified, packaged, marked and labeled/placarded, and are in all respects in proper condition for transport according to applicable international and national governmental regulations. If export shipment and I am the Primary Exporter, I certify that the contents of this consignment conform to the terms of the attached EPA Acknowledgment of Consent.
I certify that the waste minimization statement identified in 40 CFR 262.27(a) (if I am a large quantity generator) or (b) (if I am a small quantity generator) is true.

Generator's/Offeror's Printed/Typed Name | Signature | Month 4 | Day 28 | Year 05

INT'L

16. International Shipments ☐ Import to U.S. ☐ Export from U.S. Port of entry/exit:
Transporter signature (for exports only): Date leaving U.S.:

TRANSPORTER

17. Transporter Acknowledgment of Receipt of Materials
Transporter 1 Printed/Typed Name | Signature | Month | Day | Year
Transporter 2 Printed/Typed Name | Signature | Month | Day | Year

DESIGNATED FACILITY

18. Discrepancy
18a. Discrepancy Indication Space ☐ Quantity ☐ Type ☐ Residue ☐ Partial Rejection ☐ Full Rejection
Manifest Reference Number:
18b. Alternate Facility (or Generator)
U.S. EPA ID Number
Facility's Phone:
18c. Signature of Alternate Facility (or Generator) | Month | Day | Year

19. Hazardous Waste Report Management Method Codes (i.e., codes for hazardous waste treatment, disposal, and recycling systems)
1. | 2. | 3. | 4.

20. Designated Facility Owner or Operator: Certification of receipt of hazardous materials covered by the manifest except as noted in Item 18a
Printed/Typed Name | Signature | Month | Day | Year

EPA Form 8700-22 (Rev. 3-05) Previous editions are obsolete.

GENERATOR'S INITIAL COPY

EPAPA010000561

Please print or type. (Form designed for use on elite (12-pitch) typewriter.) Form Approved. OMB No. 2050-0039

UNIFORM HAZARDOUS WASTE MANIFEST

1. Generator ID Number: TXR000079307
2. Page 1 of 1
3. Emergency Response Phone
4. Manifest Tracking Number: **005593100 JJK**

5. Generator's Name and Mailing Address
CES Environmental Services - Port Arthur State ID: [illegible]
4801 Griggs Road
Houston, TX 77021
Generator's Phone:

Generator's Site Address (if different than mailing address)
CES Environmental Services - Port Arthur
2400 Kuhlman Drive
Port Arthur, TX 77640

6. Transporter 1 Company Name: CES Environmental Services, Inc State ID: 30500 U.S. EPA ID Number: TXD008359461

7. Transporter 2 Company Name U.S. EPA ID Number

8. Designated Facility Name and Site Address
Veolia Environmental Services LLC State ID: [illegible]
26400 Miller Rd
Dayton TX 77535
Facility's Phone: (409) 754-3112
U.S. EPA ID Number: N/A

9a. HM	9b. U.S. DOT Description (including Proper Shipping Name, Hazard Class, ID Number, and Packing Group (if any))	10. Containers No.	10. Containers Type	11. Total Quantity	12. Unit Wt./Vol.	13. Waste Codes
	1. Non-RCRA/Non DOT regulated wastewater	1	TT	5000	G	D001 D31
	2.					
	3.					
	4.					

14. Special Handling Instructions and Additional Information
Class 1 Non-hazardous Wastewater
TX 0000013506H
188435 6/24/09 5/39095 4677gal

15. **GENERATOR'S/OFFEROR'S CERTIFICATION:** I hereby declare that the contents of this consignment are fully and accurately described above by the proper shipping name, and are classified, packaged, marked and labeled/placarded, and are in all respects in proper condition for transport according to applicable international and national governmental regulations. If export shipment and I am the Primary Exporter, I certify that the contents of this consignment conform to the terms of the attached EPA Acknowledgment of Consent.
I certify that the waste minimization statement identified in 40 CFR 262.27(a) (if I am a large quantity generator) or (b) (if I am a small quantity generator) is true.

Generator's/Offeror's Printed/Typed Name: [illegible] Signature: [illegible] Month 4 Day 28 Year 09

INT'L

16. International Shipments ☐ Import to U.S. ☐ Export from U.S. Port of entry/exit:
Transporter signature (for exports only): Date leaving U.S.:

TRANSPORTER

17. Transporter Acknowledgment of Receipt of Materials

Transporter 1 Printed/Typed Name: Jake Nelson Signature: [illegible] Month 4 Day 28 Year 09

Transporter 2 Printed/Typed Name Signature Month Day Year

DESIGNATED FACILITY

18. Discrepancy

18a. Discrepancy Indication Space ☐ Quantity ☐ Type ☐ Residue ☐ Partial Rejection ☐ Full Rejection

Manifest Reference Number:

18b. Alternate Facility (or Generator) U.S. EPA ID Number

Facility's Phone:

18c. Signature of Alternate Facility (or Generator) Month Day Year

19. Hazardous Waste Report Management Method Codes (i.e., codes for hazardous waste treatment, disposal, and recycling systems)

1.	2.	3.	4.

20. Designated Facility Owner or Operator: Certification of receipt of hazardous materials covered by the manifest except as noted in Item 18a

Printed/Typed Name: [illegible] Signature: [illegible] Month 4 Day 30 Year 09

EPA Form 8700-22 (Rev. 3-05) Previous editions are obsolete. **TRANSPORTER'S COPY**

EPAPA010000562

Please print or type. (Form designed for use on elite (12-pitch) typewriter.) Form Approved. OMB No. 2050-0039

UNIFORM HAZARDOUS WASTE MANIFEST

1. Generator ID Number: 23491
2. Page 1 of: 1
3. Emergency Response Phone: (409) 985-4200
4. Manifest Tracking Number: 005595481 JJK

GENERATOR

5. Generator's Name and Mailing Address: KMTEX State ID: 23491
PO Box 1421
Port Arthur, TX 77641
Generator's Phone: (409) 985-4200

Generator's Site Address (if different than mailing address): KMTEX
2450 South Gulfway Drive
Port Arthur, TX 77641
(409) 985-4200

6. Transporter 1 Company Name: TES Environmental Services, Inc. State ID: 30000 U.S. EPA ID Number: TXD008950461

7. Transporter 2 Company Name: U.S. EPA ID Number:

8. Designated Facility Name and Site Address: Newpark Environmental Services LLC State ID: 30008
26400 Wilber Rd
Winnie TX, 77665
Facility's Phone: (409) 794-3119 U.S. EPA ID Number: N/A

9a. HM	9b. U.S. DOT Description (including Proper Shipping Name, Hazard Class, ID Number, and Packing Group (if any))	10. Containers No.	10. Containers Type	11. Total Quantity	12. Unit Wt./Vol.	13. Waste Codes
	Non-RCRA Wastewater (General Plant Wastewater)	1	TT	41210	G	1000210
	2.					
	3.					
	4.					

14. Special Handling Instructions and Additional Information: Please write corresponding job # from Trans ticket: 1) 3095 2) 3096 3) 3097 4) 5220 gal
Reg Normal Wastewater
1) 0418G03988H 2) 3) 4)

15. **GENERATOR'S/OFFEROR'S CERTIFICATION:** I hereby declare that the contents of this consignment are fully and accurately described above by the proper shipping name, and are classified, packaged, marked and labeled/placarded, and are in all respects in proper condition for transport according to applicable international and national governmental regulations. If export shipment and I am the Primary Exporter, I certify that the contents of this consignment conform to the terms of the attached EPA Acknowledgment of Consent.
I certify that the waste minimization statement identified in 40 CFR 262.27(a) (if I am a large quantity generator) or (b) (if I am a small quantity generator) is true.

Generator's/Offeror's Printed/Typed Name: R Gomez Signature: R Gomez Month: 4 Day: 20 Year: 04

INT'L

16. International Shipments ☐ Import to U.S. ☐ Export from U.S. Port of entry/exit:
Transporter signature (for exports only): Date leaving U.S.:

TRANSPORTER

17. Transporter Acknowledgment of Receipt of Materials
Transporter 1 Printed/Typed Name: WILFRIDO ABREU Signature: [signature] Month: 04 Day: 29 Year: 09
Transporter 2 Printed/Typed Name: Signature: Month: Day: Year:

DESIGNATED FACILITY

18. Discrepancy
18a. Discrepancy Indication Space ☐ Quantity ☐ Type ☐ Residue ☐ Partial Rejection ☐ Full Rejection
Manifest Reference Number:
18b. Alternate Facility (or Generator) U.S. EPA ID Number
Facility's Phone:
18c. Signature of Alternate Facility (or Generator) Month: Day: Year:

19. Hazardous Waste Report Management Method Codes (i.e., codes for hazardous waste treatment, disposal, and recycling systems)
1. H134 2. 3. 4.

20. Designated Facility Owner or Operator: Certification of receipt of hazardous materials covered by the manifest except as noted in Item 18a
Printed/Typed Name: Vicente Ramirez Signature: [signature] Month: 4 Day: 29 Year: 09

EPA Form 8700-22 (Rev. 3-05) Previous editions are obsolete. **TRANSPORTER'S COPY**

EPAPA010000563

Please print or type. (Form designed for use on elite (12-pitch) typewriter.)

Form Approved. OMB No. 2050-0039

UNIFORM HAZARDOUS WASTE MANIFEST

1. Generator ID Number: 23491
2. Page 1 of 1
3. Emergency Response Phone: (409) 983-4200
4. Manifest Tracking Number: **005595480 JJK**

5. Generator's Name and Mailing Address: State ID: 23491
PO Box 1431
Port Arthur, TX 77641
Generator's Phone: (409) 983-4200

Generator's Site Address (if different than mailing address)
2450 South Gulfway Drive
Port Arthur, TX 77641
(409) 983-4200

6. Transporter 1 Company Name: [illegible] Environmental Services, Inc. State ID: 30900 U.S. EPA ID Number: TXD008950461

7. Transporter 2 Company Name: U.S. EPA ID Number:

8. Designated Facility Name and Site Address: [illegible] Environmental Site Prep LLC State ID: 39090 U.S. EPA ID Number:
26400 Wilber Rd
Winnie TX, 77665
Facility's Phone: (409) 794-3119 N/A

9a. HM	9b. U.S. DOT Description (including Proper Shipping Name, Hazard Class, ID Number, and Packing Group (if any))	10. Containers No.	10. Containers Type	11. Total Quantity	12. Unit Wt./Vol.	13. Waste Codes		
	Non-RCRA Wastewater (General Plant Wastewater)	1	TT	5700	P	10002191		
	2.							
	3.							
	4.							

14. Special Handling Instructions and Additional Information
Please write corresponding job # from travel ticket
Reg Non-Haz Wastewater
1) 04180305982H 2) 6329W 8/39018 3) 6210qd 4)

15. **GENERATOR'S/OFFEROR'S CERTIFICATION:** I hereby declare that the contents of this consignment are fully and accurately described above by the proper shipping name, and are classified, packaged, marked and labeled/placarded, and are in all respects in proper condition for transport according to applicable international and national governmental regulations. If export shipment and I am the Primary Exporter, I certify that the contents of this consignment conform to the terms of the attached EPA Acknowledgment of Consent.
I certify that the waste minimization statement identified in 40 CFR 262.27(a) (if I am a large quantity generator) or (b) (if I am a small quantity generator) is true.

Generator's/Offeror's Printed/Typed Name: [illegible] Signature: [illegible] Month: 11 Day: 25 Year: 09

INT'L

16. International Shipments ☐ Import to U.S. ☐ Export from U.S. Port of entry/exit:
Transporter signature (for exports only): Date leaving U.S.:

TRANSPORTER

17. Transporter Acknowledgment of Receipt of Materials
Transporter 1 Printed/Typed Name: Signature: Month: Day: Year:
Transporter 2 Printed/Typed Name: Signature: Month: Day: Year:

DESIGNATED FACILITY

18. Discrepancy
18a. Discrepancy Indication Space ☐ Quantity ☐ Type ☐ Residue ☐ Partial Rejection ☐ Full Rejection
Manifest Reference Number:
18b. Alternate Facility (or Generator) U.S. EPA ID Number
Facility's Phone:
18c. Signature of Alternate Facility (or Generator) Month: Day: Year:

19. Hazardous Waste Report Management Method Codes (i.e., codes for hazardous waste treatment, disposal, and recycling systems)
1. H134 2. 3. 4.

20. Designated Facility Owner or Operator: Certification of receipt of hazardous materials covered by the manifest except as noted in Item 18a
Printed/Typed Name: Vicki Hymer Signature: [illegible] Month: 4 Day: 21 Year: 09

EPA Form 8700-22 (Rev. 3-05) Previous editions are obsolete.

TRANSPORTER'S COPY

EPAPA010000564

Please print or type. (Form designed for use on elite (12-pitch) typewriter.) Form Approved. OMB No. 2050-0039

UNIFORM HAZARDOUS WASTE MANIFEST

1. Generator ID Number: 23491
2. Page 1 of 1
3. Emergency Response Phone: (409) 985-4200
4. Manifest Tracking Number: 005595477 JJK

5. Generator's Name and Mailing Address: Motiva Site ID: 23491
PO Box 1421
Port Arthur, TX 77641
Generator's Phone: (409) 985-4200

Generator's Site Address (if different than mailing address):
2450 South Gulfway Drive
Port Arthur, TX 77641
(409) 985-4200

6. Transporter 1 Company Name: CES Environmental Services, Inc. State ID: 30900 U.S. EPA ID Number: TXD008250461

7. Transporter 2 Company Name: U.S. EPA ID Number:

8. Designated Facility Name and Site Address: Newport Environmental Services LLC State ID: 35048 U.S. EPA ID Number: N/A
25400 Wilber Rd
Winnie TX, 77665
Facility's Phone: (409) 794-3119

9a. HM	9b. U.S. DOT Description (including Proper Shipping Name, Hazard Class, ID Number, and Packing Group (if any))	10. Containers No.	10. Containers Type	11. Total Quantity	12. Unit Wt./Vol.	13. Waste Codes		
	Non-RCRA Wastewater (General Plant Wastewater)	1	TT	17000	P	D001		
	2.							
	3.							
	4.							

14. Special Handling Instructions and Additional Information
Please write corresponding info. from Trans ticket
Reg Non-Haz Wastewater
1) 04180203985H 2) 85337 6/3/09 8/29/09 5937gal

15. **GENERATOR'S/OFFEROR'S CERTIFICATION:** I hereby declare that the contents of this consignment are fully and accurately described above by the proper shipping name, and are classified, packaged, marked and labeled/placarded, and are in all respects in proper condition for transport according to applicable international and national governmental regulations. If export shipment and I am the Primary Exporter, I certify that the contents of this consignment conform to the terms of the attached EPA Acknowledgment of Consent.
I certify that the waste minimization statement identified in 40 CFR 262.27(a) (if I am a large quantity generator) or (b) (if I am a small quantity generator) is true.

Generator's/Offeror's Printed/Typed Name: [illegible] Signature: [illegible] Month 11 Day 23 Year 09

GENERATOR

INT'L

16. International Shipments ☐ Import to U.S. ☐ Export from U.S. Port of entry/exit:
Transporter signature (for exports only): Date leaving U.S.:

TRANSPORTER

17. Transporter Acknowledgment of Receipt of Materials
Transporter 1 Printed/Typed Name: Jake Norton Signature: [illegible] Month 11 Day 23 Year 09
Transporter 2 Printed/Typed Name: Signature: Month Day Year

DESIGNATED FACILITY

18. Discrepancy
18a. Discrepancy Indication Space ☐ Quantity ☐ Type ☐ Residue ☐ Partial Rejection ☐ Full Rejection
Manifest Reference Number:
18b. Alternate Facility (or Generator) U.S. EPA ID Number
Facility's Phone:
18c. Signature of Alternate Facility (or Generator) Month Day Year

19. Hazardous Waste Report Management Method Codes (i.e., codes for hazardous waste treatment, disposal, and recycling systems)
1. H134 2. 3. 4.

20. Designated Facility Owner or Operator: Certification of receipt of hazardous materials covered by the manifest except as noted in Item 18a
Printed/Typed Name: Vicki Hammer Signature: [illegible] Month 4 Day 27 Year 09

EPA Form 8700-22 (Rev. 3-05) Previous editions are obsolete. **TRANSPORTER'S COPY**

EPAPA010000565

Please print or type. (Form designed for use on elite (12-pitch) typewriter.)

Form Approved. OMB No. 2050-0039

UNIFORM HAZARDOUS WASTE MANIFEST

1. Generator ID Number: 23491
2. Page 1 of 1
3. Emergency Response Phone: (409) 985-4200
4. Manifest Tracking Number: **005595478 JJK**

5. Generator's Name and Mailing Address: Valero Refining - Texas, L.P. PO Box 1421 Port Arthur, TX 77641 — State ID 23491
Generator's Site Address (if different than mailing address): Valero 2450 South Gulfway Drive Port Arthur, TX 77640
Generator's Phone: (409) 985-4200 | (409) 985-4200

6. Transporter 1 Company Name: CCC Environmental Services, Inc. — State ID 30000 — U.S. EPA ID Number: TXD006950461

7. Transporter 2 Company Name — U.S. EPA ID Number:

8. Designated Facility Name and Site Address: Newport Environmental Services, LLC 35400 Wilber Rd Winnie TX, 77665 — State ID 71098 — U.S. EPA ID Number: N/A
Facility's Phone: (409) 794-3119

9a. HM	9b. U.S. DOT Description (including Proper Shipping Name, Hazard Class, ID Number, and Packing Group (if any))	10. Containers No.	10. Containers Type	11. Total Quantity	12. Unit Wt./Vol.	13. Waste Codes
	Non-RCRA Wastewater (General Plant Wastewater)	1	TT	483710	P	D002
	2.					
	3.					
	4.					

14. Special Handling Instructions and Additional Information: Valero Refining (Texas) - Port Arthur — Please write corresponding note from Trans ticket — 533512 — 23491
Reg Non-Haz Wastewater
1) 0416030398H 2) 6) 30900 5) 5902 gal

15. **GENERATOR'S/OFFEROR'S CERTIFICATION:** I hereby declare that the contents of this consignment are fully and accurately described above by the proper shipping name, and are classified, packaged, marked and labeled/placarded, and are in all respects in proper condition for transport according to applicable international and national governmental regulations. If export shipment and I am the Primary Exporter, I certify that the contents of this consignment conform to the terms of the attached EPA Acknowledgment of Consent.
I certify that the waste minimization statement identified in 40 CFR 262.27(a) (if I am a large quantity generator) or (b) (if I am a small quantity generator) is true.

Generator's/Offeror's Printed/Typed Name: R Jamison — Signature: R Jamison — Month 04 Day 29 Year 09

16. International Shipments ☐ Import to U.S. ☐ Export from U.S. Port of entry/exit:
Transporter signature (for exports only): Date leaving U.S.:

17. Transporter Acknowledgment of Receipt of Materials
Transporter 1 Printed/Typed Name: WILFRIDO ABREU — Signature: [signature] — Month 04 Day 29 Year 09
Transporter 2 Printed/Typed Name — Signature — Month Day Year

18. Discrepancy
18a. Discrepancy Indication Space ☐ Quantity ☐ Type ☐ Residue ☐ Partial Rejection ☐ Full Rejection
Manifest Reference Number:
18b. Alternate Facility (or Generator) — U.S. EPA ID Number
Facility's Phone:
18c. Signature of Alternate Facility (or Generator) — Month Day Year

19. Hazardous Waste Report Management Method Codes (i.e., codes for hazardous waste treatment, disposal, and recycling systems)
1. H130 2. 3. 4.

20. Designated Facility Owner or Operator: Certification of receipt of hazardous materials covered by the manifest except as noted in Item 18a
Printed/Typed Name: Vick Hyauer — Signature: [signature] — Month 4 Day 29 Year 09

GENERATOR — INT'L — TRANSPORTER — DESIGNATED FACILITY

EPA Form 8700-22 (Rev. 3-05) Previous editions are obsolete.

TRANSPORTER'S COPY

EPAPA010000566

Please print or type. (Form designed for use on elite (12-pitch) typewriter.) Form Approved. OMB No. 2050-0039

UNIFORM HAZARDOUS WASTE MANIFEST

1. Generator ID Number: 23491
2. Page 1 of 1
3. Emergency Response Phone: (409) 985-4200
4. Manifest Tracking Number: 005595479 JJK

GENERATOR

5. Generator's Name and Mailing Address: [illegible] State ID: 23491
PO Box 1421
Port Arthur, TX 77641
Generator's Phone: (409) 985-4200

Generator's Site Address (if different than mailing address): [illegible]
2450 South Gulfway Drive
Port Arthur, TX 77641
(409) 985-4200

6. Transporter 1 Company Name: CES Environmental Services, Inc. State ID: 30040 U.S. EPA ID Number: TXD008950461

7. Transporter 2 Company Name: U.S. EPA ID Number:

8. Designated Facility Name and Site Address: Newpark Environmental Services LLC State ID: 39098 U.S. EPA ID Number: 239 N/A 239
26400 Miller Rd
Winnie TX, 77665
Facility's Phone: (409) 724-3119

9a. HM	9b. U.S. DOT Description (including Proper Shipping Name, Hazard Class, ID Number, and Packing Group (if any))	10. Containers No.	10. Containers Type	11. Total Quantity	12. Unit Wt./Vol.	13. Waste Codes
	(Non-RCRA Wastewater (General Plant Wastewater))	1	TT	14160	P	10002101
	2.					
	3.					
	4.					

14. Special Handling Instructions and Additional Information: Please write corresponding bbl from Trans ticket
Reg Non-Haz Wastewater
1) 04180003988H 2) 6/32960 3) 39095 4) 5385 gal

15. **GENERATOR'S/OFFEROR'S CERTIFICATION:** I hereby declare that the contents of this consignment are fully and accurately described above by the proper shipping name, and are classified, packaged, marked and labeled/placarded, and are in all respects in proper condition for transport according to applicable international and national governmental regulations. If export shipment and I am the Primary Exporter, I certify that the contents of this consignment conform to the terms of the attached EPA Acknowledgment of Consent.
I certify that the waste minimization statement identified in 40 CFR 262.27(a) (if I am a large quantity generator) or (b) (if I am a small quantity generator) is true.

Generator's/Offeror's Printed/Typed Name: [illegible] Signature: [illegible] Month 11 Day 10 Year 10

INT'L

16. International Shipments ☐ Import to U.S. ☐ Export from U.S. Port of entry/exit:
Transporter signature (for exports only): Date leaving U.S.:

TRANSPORTER

17. Transporter Acknowledgment of Receipt of Materials
Transporter 1 Printed/Typed Name: WILFRIDO ABREU Signature: [illegible] Month 04 Day 29 Year 09
Transporter 2 Printed/Typed Name: Signature: Month Day Year

DESIGNATED FACILITY

18. Discrepancy
18a. Discrepancy Indication Space ☐ Quantity ☐ Type ☐ Residue ☐ Partial Rejection ☐ Full Rejection
Manifest Reference Number:
18b. Alternate Facility (or Generator) U.S. EPA ID Number
Facility's Phone:
18c. Signature of Alternate Facility (or Generator) Month Day Year

19. Hazardous Waste Report Management Method Codes (i.e., codes for hazardous waste treatment, disposal, and recycling systems)
1. H134 2. 3. 4.

20. Designated Facility Owner or Operator: Certification of receipt of hazardous materials covered by the manifest except as noted in Item 18a
Printed/Typed Name: Nick Hampton Signature: [illegible] Month 4 Day 29 Year 09

EPA Form 8700-22 (Rev. 3-05) Previous editions are obsolete. **TRANSPORTER'S COPY**

EPAPA010000567

7 to 224

Please print or type. (Form designed for use on elite (12-pitch) typewriter.) Form Approved. OMB No. 2050-0039

UNIFORM HAZARDOUS WASTE MANIFEST

1. Generator ID Number: 23491
2. Page 1 of 1
3. Emergency Response Phone: (409) 985-4200
4. Manifest Tracking Number: **005595476 JJK**

5. Generator's Name and Mailing Address: State ID: 23491
PO Box 1421
Port Arthur, TX 77641
Generator's Phone: (409) 985-4200

Generator's Site Address (if different than mailing address)
2450 South Gulfway Drive
Port Arthur, TX 77641
(409) 985-4200

6. Transporter 1 Company Name: CES Environmental Services, Inc. State ID: 30400 U.S. EPA ID Number: TXD008950461

7. Transporter 2 Company Name U.S. EPA ID Number

8. Designated Facility Name and Site Address: Newark Environmental Services LLC State ID: 19098 U.S. EPA ID Number
25400 Weber Rd
Winnie TX, 77665
Facility's Phone: (409) 794-3119 N/A

9a. HM	9b. U.S. DOT Description (including Proper Shipping Name, Hazard Class, ID Number, and Packing Group (if any))	10. Containers No.	10. Containers Type	11. Total Quantity	12. Unit Wt./Vol.	13. Waste Codes
	1. Non-RCRA Wastewater (General Plant Wastewater)	1	TT	50540	P	100021R1
	2.					
	3.					
	4.					

14. Special Handling Instructions and Additional Information
Please write correspondence job # from Trans ticket
XXXXXXX 85173 XXXXXXX CES Job # - 3940
Reg Non-Haz Wastewater
1) 0410030950H 2) 6) 35960 5) 59088 4) 6237926

15. **GENERATOR'S/OFFEROR'S CERTIFICATION:** I hereby declare that the contents of this consignment are fully and accurately described above by the proper shipping name, and are classified, packaged, marked and labeled/placarded, and are in all respects in proper condition for transport according to applicable international and national governmental regulations. If export shipment and I am the Primary Exporter, I certify that the contents of this consignment conform to the terms of the attached EPA Acknowledgment of Consent.
I certify that the waste minimization statement identified in 40 CFR 262.27(a) (if I am a large quantity generator) or (b) (if I am a small quantity generator) is true.

Generator's/Offeror's Printed/Typed Name: D Jamison Signature: D Jamison Month 4 Day 28 Year 09

16. International Shipments ☐ Import to U.S. ☐ Export from U.S. Port of entry/exit:
Transporter signature (for exports only): Date leaving U.S.:

17. Transporter Acknowledgment of Receipt of Materials
Transporter 1 Printed/Typed Name: Alfonso Salazar Signature: Month 4 Day 28 Year 9
Transporter 2 Printed/Typed Name Signature Month Day Year

18. Discrepancy
18a. Discrepancy Indication Space ☐ Quantity ☐ Type ☐ Residue ☐ Partial Rejection ☐ Full Rejection
Manifest Reference Number:

18b. Alternate Facility (or Generator) U.S. EPA ID Number
Facility's Phone:

18c. Signature of Alternate Facility (or Generator) Month Day Year

19. Hazardous Waste Report Management Method Codes (i.e., codes for hazardous waste treatment, disposal, and recycling systems)
1. H134 2. 3. 4.

20. Designated Facility Owner or Operator: Certification of receipt of hazardous materials covered by the manifest except as noted in Item 18a
Printed/Typed Name: Vicki Hargrave Signature: Month 4 Day 28 Year 09

GENERATOR | INT'L | TRANSPORTER | DESIGNATED FACILITY

EPA Form 8700-22 (Rev. 3-05) Previous editions are obsolete. **TRANSPORTER'S COPY**

EPAPA010000568

Please print or type. (Form designed for use on elite (12-pitch) typewriter.)

Form Approved. OMB No. 2050-0039

UNIFORM HAZARDOUS WASTE MANIFEST

1. Generator ID Number: TXR000079287
2. Page 1 of
3. Emergency Response Phone
4. Manifest Tracking Number: 005593113 JJK

GENERATOR

5. Generator's Name and Mailing Address
CES Environmental Services - Port Arthur
4804 Griggs Road
Houston, TX 77003
State ID:
Generator's Phone:

Generator's Site Address (if different than mailing address)
CES Environmental Services - Port Arthur
Port Arthur, TX 77640

6. Transporter 1 Company Name: CES Environmental Services, Inc.
State ID: 30768
U.S. EPA ID Number: TXD008359461

7. Transporter 2 Company Name
U.S. EPA ID Number

8. Designated Facility Name and Site Address
Heritage Environmental Services LLC
26000 Miller Rd
Dayton TX, 77535
State ID: 30768
U.S. EPA ID Number
Facility's Phone: (409) 294-3119
N/A

9a. HM	9b. U.S. DOT Description (including Proper Shipping Name, Hazard Class, ID Number, and Packing Group (if any))	10. Containers No.	10. Containers Type	11. Total Quantity	12. Unit Wt./Vol.	13. Waste Codes		
	1. Non-DOT A Non DOT regulated material		TT	4270	G	D001		
	2.							
	3.							
	4.							

14. Special Handling Instructions and Additional Information
Profile ID: CES Environmental (CES - Port Arthur)
Class 1 Non-hazardous Nonspecific
1) 0000585 6) 0000 5) 0000 4) 0000

15. **GENERATOR'S/OFFEROR'S CERTIFICATION:** I hereby declare that the contents of this consignment are fully and accurately described above by the proper shipping name, and are classified, packaged, marked and labeled/placarded, and are in all respects in proper condition for transport according to applicable international and national governmental regulations. If export shipment and I am the Primary Exporter, I certify that the contents of this consignment conform to the terms of the attached EPA Acknowledgment of Consent.
I certify that the waste minimization statement identified in 40 CFR 262.27(a) (if I am a large quantity generator) or (b) (if I am a small quantity generator) is true.

Generator's/Offeror's Printed/Typed Name: D. Cordrey
Signature
Month 4 Day 30 Year 02

INT'L

16. International Shipments ☐ Import to U.S. ☑ Export from U.S. Port of entry/exit:
Transporter signature (for exports only): Date leaving U.S.:

TRANSPORTER

17. Transporter Acknowledgment of Receipt of Materials
Transporter 1 Printed/Typed Name
Signature
Month Day Year

Transporter 2 Printed/Typed Name
Signature
Month Day Year

DESIGNATED FACILITY

18. Discrepancy
18a. Discrepancy Indication Space ☐ Quantity ☐ Type ☐ Residue ☐ Partial Rejection ☐ Full Rejection
Manifest Reference Number:

18b. Alternate Facility (or Generator)
U.S. EPA ID Number
Facility's Phone:

18c. Signature of Alternate Facility (or Generator)
Month Day Year

19. Hazardous Waste Report Management Method Codes (i.e., codes for hazardous waste treatment, disposal, and recycling systems)

1.	2.	3.	4.
H040			

20. Designated Facility Owner or Operator: Certification of receipt of hazardous materials covered by the manifest except as noted in Item 18a
Printed/Typed Name
Signature
Month 4 Day 30 Year 02

EPA Form 8700-22 (Rev. 3-05) Previous editions are obsolete.

GENERATOR'S INITIAL COPY

EPAPA010000569

Please print or type. (Form designed for use on elite (12-pitch) typewriter.) Form Approved. OMB No. 2050-0039

UNIFORM HAZARDOUS WASTE MANIFEST

1. Generator ID Number: TXR000079307
2. Page 1 of 1
3. Emergency Response Phone:
4. Manifest Tracking Number: 005593114 JJK

GENERATOR

5. Generator's Name and Mailing Address
CES Environmental Services - Port Arthur State ID 33095
4504 Griggs Road
Houston, TX 77021
Generator's Phone:

Generator's Site Address (if different than mailing address)
CES Environmental Services - Port Arthur
2400 Gulfway Drive
Port Arthur, TX 77640

6. Transporter 1 Company Name: CES Environmental Services, Inc. State ID 70900
U.S. EPA ID Number: TXD008950461

7. Transporter 2 Company Name:
U.S. EPA ID Number:

8. Designated Facility Name and Site Address
Newpark Environmental Services LLC State ID 33098
26400 Weber Rd
Winnie TX 77665
Facility's Phone: (409) 794-3119
U.S. EPA ID Number: N/A

9a. HM	9b. U.S. DOT Description (including Proper Shipping Name, Hazard Class, ID Number, and Packing Group (if any))	10. Containers No.	10. Containers Type	11. Total Quantity	12. Unit Wt./Vol.	13. Waste Codes
	1. Non-RCRA Non DOT regulated wastewater	1	TT		G	0001431
	2.					
	3.					
	4.					

14. Special Handling Instructions and Additional Information
Folder 15 - CES Environmental (CES - Port Arthur)
Class 1 Non-hazardous wastewater
1) 0686091906H 2) 186565 3) 4) 5214gal

15. **GENERATOR'S/OFFEROR'S CERTIFICATION:** I hereby declare that the contents of this consignment are fully and accurately described above by the proper shipping name, and are classified, packaged, marked and labeled/placarded, and are in all respects in proper condition for transport according to applicable international and national governmental regulations. If export shipment and I am the Primary Exporter, I certify that the contents of this consignment conform to the terms of the attached EPA Acknowledgment of Consent.
I certify that the waste minimization statement identified in 40 CFR 262.27(a) (if I am a large quantity generator) or (b) (if I am a small quantity generator) is true.

Generator's/Offeror's Printed/Typed Name: Johnston Molecho Signature: Month 5 Day 1 Year 17

INT'L

16. International Shipments ☐ Import to U.S. ☐ Export from U.S. Port of entry/exit:
Transporter signature (for exports only): Date leaving U.S.:

TRANSPORTER

17. Transporter Acknowledgment of Receipt of Materials
Transporter 1 Printed/Typed Name: Signature: Month Day Year
Transporter 2 Printed/Typed Name: Signature: Month Day Year

DESIGNATED FACILITY

18. Discrepancy
18a. Discrepancy Indication Space ☐ Quantity ☐ Type ☐ Residue ☐ Partial Rejection ☐ Full Rejection
Manifest Reference Number:
18b. Alternate Facility (or Generator) U.S. EPA ID Number
Facility's Phone:
18c. Signature of Alternate Facility (or Generator) Month Day Year

19. Hazardous Waste Report Management Method Codes (i.e., codes for hazardous waste treatment, disposal, and recycling systems)
1. H134 2. 3. 4.

20. Designated Facility Owner or Operator: Certification of receipt of hazardous materials covered by the manifest except as noted in Item 18a
Printed/Typed Name: Victor Holweger Signature: Month 5 Day 1 Year 19

EPA Form 8700-22 (Rev. 3-05) Previous editions are obsolete. **TRANSPORTER'S COPY**

EPAPA010000570

Please print or type. (Form designed for use on elite (12-pitch) typewriter.)

Form Approved. OMB No. 2050-0039

UNIFORM HAZARDOUS WASTE MANIFEST

1. Generator ID Number: TXR000079307
2. Page 1 of 1
3. Emergency Response Phone
4. Manifest Tracking Number: **005593116 JJK**

GENERATOR

5. Generator's Name and Mailing Address: CES Environmental Services - Port Arthur, State ID [illegible], 4804 Griggs Road, Houston, TX 77021
Generator's Site Address (if different than mailing address): CES Environmental Services - Port Arthur, 9400 Gulfway Drive, Port Arthur, TX 77640
Generator's Phone:

6. Transporter 1 Company Name: CES Environmental Services, Inc. State ID [illegible] — U.S. EPA ID Number: TXD000050401

7. Transporter 2 Company Name — U.S. EPA ID Number:

8. Designated Facility Name and Site Address: Newport Environmental Services LLC, 2840 Miller Rd, Wayne TX 75665, State ID [illegible] — U.S. EPA ID Number: N/A
Facility's Phone: (903) 724-3119

9a. HM	9b. U.S. DOT Description (including Proper Shipping Name, Hazard Class, ID Number, and Packing Group (if any))	10. Containers No.	10. Containers Type	11. Total Quantity	12. Unit Wt./Vol.	13. Waste Codes
	1. Non-RCRA/Non DOT regulated waste water	1	TT	5000	G	0001 D01
	2.					
	3.					
	4.					

14. Special Handling Instructions and Additional Information
Profile ID: CES Environmental (CES) - Port Arthur
Class 1 Nonhazardous Wastewater
1) 0000013068H 2) N88585 3) 29140 4) 39098 5) 5978 gal

15. **GENERATOR'S/OFFEROR'S CERTIFICATION:** I hereby declare that the contents of this consignment are fully and accurately described above by the proper shipping name, and are classified, packaged, marked and labeled/placarded, and are in all respects in proper condition for transport according to applicable international and national governmental regulations. If export shipment and I am the Primary Exporter, I certify that the contents of this consignment conform to the terms of the attached EPA Acknowledgment of Consent.
I certify that the waste minimization statement identified in 40 CFR 262.27(a) (if I am a large quantity generator) or (b) (if I am a small quantity generator) is true.

Generator's/Offeror's Printed/Typed Name: Bo Lombardi — Signature: [signature] — Month 5 Day 1 Year 09

INT'L

16. International Shipments ☐ Import to U.S. ☐ Export from U.S. Port of entry/exit:
Transporter signature (for exports only): Date leaving U.S.:

TRANSPORTER

17. Transporter Acknowledgment of Receipt of Materials
Transporter 1 Printed/Typed Name: Ryan Green — Signature: [signature] — Month 5 Day 1 Year 09
Transporter 2 Printed/Typed Name — Signature — Month Day Year

DESIGNATED FACILITY

18. Discrepancy
18a. Discrepancy Indication Space ☐ Quantity ☐ Type ☐ Residue ☐ Partial Rejection ☐ Full Rejection
Manifest Reference Number:
18b. Alternate Facility (or Generator) — U.S. EPA ID Number
Facility's Phone:
18c. Signature of Alternate Facility (or Generator) — Month Day Year

19. Hazardous Waste Report Management Method Codes (i.e., codes for hazardous waste treatment, disposal, and recycling systems)
1. H134 2. 3. 4.

20. Designated Facility Owner or Operator: Certification of receipt of hazardous materials covered by the manifest except as noted in Item 18a
Printed/Typed Name: Victor Hollowell — Signature: [signature] — Month 5 Day 1 Year 09

EPA Form 8700-22 (Rev. 3-05) Previous editions are obsolete.

GENERATOR'S INITIAL COPY

EPAPA010000571

Please print or type. (Form designed for use on elite (12-pitch) typewriter.) Form Approved. OMB No. 2050-0039

UNIFORM HAZARDOUS WASTE MANIFEST

1. Generator ID Number: TXR000079307
2. Page 1 of
3. Emergency Response Phone
4. Manifest Tracking Number: 005593117 JJK

GENERATOR

5. Generator's Name and Mailing Address: CES Environmental Services - Port Arthur, State ID [illegible], 4924 Griggs Road, Houston, TX 77021
Generator's Site Address (if different than mailing address): CES Environmental Services - Port Arthur, 2621 Gulfway Drive, Port Arthur, TX 77640
Generator's Phone:

6. Transporter 1 Company Name: CES Environmental Services, Inc. State ID [illegible] U.S. EPA ID Number: TXD008950461

7. Transporter 2 Company Name: 10285577 U.S. EPA ID Number:

8. Designated Facility Name and Site Address: Newpark Environmental Services LLC, 2840 Weber Rd, Winnie TX, 77665, State ID [illegible] U.S. EPA ID Number: N/A
Facility's Phone: (409) 794-3119

9a. HM	9b. U.S. DOT Description (including Proper Shipping Name, Hazard Class, ID Number, and Packing Group (if any))	10. Containers No.	10. Containers Type	11. Total Quantity	12. Unit Wt./Vol.	13. Waste Codes
	1. Non-RCRA/Non DOT regulated wastewater	1	TT	500	G	D001 D011
	2.					
	3.					
	4.					

14. Special Handling Instructions and Additional Information
Profile ID: CES Environmental (CES - Port Arthur)
Class 1 Nonhazardous Wastewater
1) [illegible] 2) 1/68505 3) 29LO 4) 57GAX 421 Gal

15. **GENERATOR'S/OFFEROR'S CERTIFICATION:** I hereby declare that the contents of this consignment are fully and accurately described above by the proper shipping name, and are classified, packaged, marked and labeled/placarded, and are in all respects in proper condition for transport according to applicable international and national governmental regulations. If export shipment and I am the Primary Exporter, I certify that the contents of this consignment conform to the terms of the attached EPA Acknowledgment of Consent.
I certify that the waste minimization statement identified in 40 CFR 262.27(a) (if I am a large quantity generator) or (b) (if I am a small quantity generator) is true.

Generator's/Offeror's Printed/Typed Name: Bo Rumberland Signature: [signature] Month 5 Day 1 Year 09

INT'L

16. International Shipments ☐ Import to U.S. ☐ Export from U.S. Port of entry/exit:
Transporter signature (for exports only): Date leaving U.S.:

TRANSPORTER

17. Transporter Acknowledgment of Receipt of Materials
Transporter 1 Printed/Typed Name: Jake Nantor Signature: [signature] Month 5 Day 1 Year 09
Transporter 2 Printed/Typed Name: Signature: Month Day Year

DESIGNATED FACILITY

18. Discrepancy
18a. Discrepancy Indication Space ☐ Quantity ☐ Type ☐ Residue ☐ Partial Rejection ☐ Full Rejection
Manifest Reference Number:
18b. Alternate Facility (or Generator) U.S. EPA ID Number
Facility's Phone:
18c. Signature of Alternate Facility (or Generator) Month Day Year

19. Hazardous Waste Report Management Method Codes (i.e., codes for hazardous waste treatment, disposal, and recycling systems)
1. H132 2. 3. 4.

20. Designated Facility Owner or Operator: Certification of receipt of hazardous materials covered by the manifest except as noted in Item 18a
Printed/Typed Name: Vick Hassanali Signature: [signature] Month 5 Day 1 Year 09

EPA Form 8700-22 (Rev. 3-05) Previous editions are obsolete. **TRANSPORTER'S COPY**

EPAPA010000572

Please print or type. (Form designed for use on elite (12-pitch) typewriter.) Form Approved. OMB No. 2050-0039

UNIFORM HAZARDOUS WASTE MANIFEST

1. Generator ID Number: TXR000079307
2. Page 1 of
3. Emergency Response Phone
4. Manifest Tracking Number: 005593115 JJK

5. Generator's Name and Mailing Address
CES Environmental Services - Port Arthur State ID 85585
4904 Griggs Road
Houston, TX 77021
Generator's Phone:

Generator's Site Address (if different than mailing address)
CES Environmental Services - Port Arthur
2400 Gulfview Drive
Port Arthur, TX 77640

6. Transporter 1 Company Name: CES Environmental Services, Inc. State ID 15500
U.S. EPA ID Number: TXD008950461

7. Transporter 2 Company Name
U.S. EPA ID Number

8. Designated Facility Name and Site Address
Newpark Environmental Services LLC # 85554
2540 Wilber Rd State ID 30038
Winnie TX, 77665
Facility's Phone: (409) 734-3119
U.S. EPA ID Number: N/A

9a. HM	9b. U.S. DOT Description (including Proper Shipping Name, Hazard Class, ID Number, and Packing Group (if any))	10. Containers No.	10. Containers Type	11. Total Quantity	12. Unit Wt./Vol.	13. Waste Codes
	1. Non-RCRA/Non DOT regulated waste water	1	TT	5000	G	D001 D31
	2.					
	3.					
	4.					

14. Special Handling Instructions and Additional Information
Profile ID: CES Environmental (CES - Port Arthur)
Class 1 Non-Hazardous Wastewater
1) 003891190BH 2) 1) 88585 6) 30940 8) 39098 SO 4936 gal

15. **GENERATOR'S/OFFEROR'S CERTIFICATION:** I hereby declare that the contents of this consignment are fully and accurately described above by the proper shipping name, and are classified, packaged, marked and labeled/placarded, and are in all respects in proper condition for transport according to applicable international and national governmental regulations. If export shipment and I am the Primary Exporter, I certify that the contents of this consignment conform to the terms of the attached EPA Acknowledgment of Consent.
I certify that the waste minimization statement identified in 40 CFR 262.27(a) (if I am a large quantity generator) or (b) (if I am a small quantity generator) is true.

Generator's/Offeror's Printed/Typed Name: Bo
Signature
Month 5 Day 1 Year 09

16. International Shipments ☐ Import to U.S. ☐ Export from U.S. Port of entry/exit:
Transporter signature (for exports only): Date leaving U.S.:

17. Transporter Acknowledgment of Receipt of Materials
Transporter 1 Printed/Typed Name: Jake Norton
Signature
Month 5 Day 1 Year 09
Transporter 2 Printed/Typed Name
Signature
Month Day Year

18. Discrepancy
18a. Discrepancy Indication Space ☐ Quantity ☐ Type ☐ Residue ☐ Partial Rejection ☐ Full Rejection
Manifest Reference Number:

18b. Alternate Facility (or Generator)
U.S. EPA ID Number
Facility's Phone:

18c. Signature of Alternate Facility (or Generator)
Month Day Year

19. Hazardous Waste Report Management Method Codes (i.e., codes for hazardous waste treatment, disposal, and recycling systems)

1.	2.	3.	4.
H134			

20. Designated Facility Owner or Operator: Certification of receipt of hazardous materials covered by the manifest except as noted in Item 18a
Printed/Typed Name: Vicki Hauer
Signature
Month 5 Day 1 Year 09

GENERATOR — INT'L — TRANSPORTER — DESIGNATED FACILITY

EPA Form 8700-22 (Rev. 3-05) Previous editions are obsolete. **TRANSPORTER'S COPY**

EPAPA010000573

Please print or type. (Form designed for use on elite (12-pitch) typewriter.) Form Approved. OMB No. 2050-0039

UNIFORM HAZARDOUS WASTE MANIFEST

1. Generator ID Number: TXR000070317
2. Page 1 of
3. Emergency Response Phone
4. Manifest Tracking Number: 005593118 JJK

5. Generator's Name and Mailing Address
CES Environmental Services - Fort Worth
1800 Cooper Street
Fort Worth, TX 76101
Generator's Phone:

Generator's Site Address (if different than mailing address)
CES Environmental Services - Fort Worth
1800 Cooper Street
Fort Worth, TX 76101

6. Transporter 1 Company Name: CES Environmental Services, Inc. — State ID: [illegible]
U.S. EPA ID Number: TXD009950461

7. Transporter 2 Company Name
U.S. EPA ID Number

8. Designated Facility Name and Site Address
Newport Environmental Services, LLC
2500 Wilson Rd
Houston, TX 77026
Facility's Phone: (409) 734-5119
State ID: [illegible]
U.S. EPA ID Number: N/A

9a. HM	9b. U.S. DOT Description (including Proper Shipping Name, Hazard Class, ID Number, and Packing Group (if any))	10. Containers No.	10. Containers Type	11. Total Quantity	12. Unit Wt./Vol.	13. Waste Codes
	1. Non-RCRA/Non-DOT regulated waste [illegible]	[illegible]	[illegible]	4875	[illegible]	[illegible]
	2.					
	3.					
	4.					

14. Special Handling Instructions and Additional Information
Profile ID: CES Environmental (CES - Fort Worth)
Class 1 Non-hazardous Petroleum
1) 0000011008H 4855 5 6B090 5 D3904 4875 gal

15. **GENERATOR'S/OFFEROR'S CERTIFICATION:** I hereby declare that the contents of this consignment are fully and accurately described above by the proper shipping name, and are classified, packaged, marked and labeled/placarded, and are in all respects in proper condition for transport according to applicable international and national governmental regulations. If export shipment and I am the Primary Exporter, I certify that the contents of this consignment conform to the terms of the attached EPA Acknowledgment of Consent.
I certify that the waste minimization statement identified in 40 CFR 262.27(a) (if I am a large quantity generator) or (b) (if I am a small quantity generator) is true.

Generator's/Offeror's Printed/Typed Name | Signature | Month | Day | Year

16. International Shipments ☐ Import to U.S. ☐ Export from U.S. Port of entry/exit:
Transporter signature (for exports only): Date leaving U.S.:

17. Transporter Acknowledgment of Receipt of Materials
Transporter 1 Printed/Typed Name | Signature | Month | Day | Year
Transporter 2 Printed/Typed Name | Signature | Month | Day | Year

18. Discrepancy
18a. Discrepancy Indication Space ☐ Quantity ☐ Type ☐ Residue ☐ Partial Rejection ☐ Full Rejection
Manifest Reference Number:

18b. Alternate Facility (or Generator) U.S. EPA ID Number
Facility's Phone:

18c. Signature of Alternate Facility (or Generator) | Month | Day | Year

19. Hazardous Waste Report Management Method Codes (i.e., codes for hazardous waste treatment, disposal, and recycling systems)
1. H134 2. 3. 4.

20. Designated Facility Owner or Operator: Certification of receipt of hazardous materials covered by the manifest except as noted in Item 18a
Printed/Typed Name | Signature | Month 5 | Day 1 | Year 09

GENERATOR | INT'L | TRANSPORTER | DESIGNATED FACILITY

EPA Form 8700-22 (Rev. 3-05) Previous editions are obsolete. **GENERATOR'S INIT' COPY**

EPAPA010000574

CES Environmental Services, Inc.

Bill Of Lading # : 85071

Folder ID :	Spent Sulfidic Caustic

Original – Shipper Provided Short Form Straight Bill of Lading – Not Negotiable – Domestic

SHIPPED FROM :

CES Environmental Services - Port Arthur
2420 S. Gulfway Drive
Port Arthur , TX 77640

11a) HOU-2375
11b)
11c)
11c)

The property described below, in apparent good order, except as noted (content and condition of packages unknown), marked, consigned, and destined as indicated below, which said carrier (the word carrier being understood throughout this as meaning any person or corporation authorized to be in possession of the property under the contract) agrees to carry to its usual place of delivery at said destination, if on its route, otherwise to deliver to another carrier on the route to said destination. This Bill of Lading is a receipt for goods; it is not of itself a contract of carriage. It is mutually agreed, as to each carrier of all or as to any said over all or any portion of said route to destination, and as to each party at any time interested in all or any of said property, that every service to be performed hereunder shall be subject to all the terms and conditions contained in the applicable contract between shipper and carrier or intermediary.

For payment: Charges to be billed to Shipper or the "Billed to" party are set forth in the governing contract with Shipper. No charges other than those contained therein may be billed to Shipper or the "Billed to" party without prior written consent of Shipper. The extra copy of this Bill of Lading, furnished at the time of shipment, must be attached to the freight bill submitted to Shipper or the "Billed to" party and sent to:

CONSIGNED TO :
Boise Cascade
4200 Hwy 190 West
DeRidder , LA 70634

CARRIER :
CES Environmental (Port Arthur)
2420 Gulfway Dr.
Port Arthur , TX 77640

This is to certify that the product stated below are properly classified, described, packaged, marked and labeled and is in proper condition for transportation according to the applicable regulations of the Department of Transportation. If this Shipment moves between to ports by a carrier by water, the law requires that the Bill of Lading shall state whether it is "carrier's or shipper's weight."

Intermodal Certificate: All information required by Federal Highway Administration regulations at 49 CFR 390.5400 implementing the Intermodal Safe Container Act of 1982 is set forth on the face of this bill of lading. The shipper name herein is the tendering party.

Haz	Container No.	Container Type	Total Quantity	Unit Wt/Vol	Description of Materials, Special Marks, and Exceptions
No	1	TT	48,980	P	RQ, Corrosive liquids, n.o.s. (weak caustic solution), 8, UN1760, PG II
No					**delivery of "Weak Caustic Solution" to the Green tank # 3246SDL**

Shipper : CES Environmental Services - Port Arthur
Per : [illegible] **Signature :** [illegible] **Date :** 4/27/09

Carrier CES Environmental (Port Arthur)
Per : [illegible] **Signature :** [illegible] **Date :** 4-27-09

Receiving Facility : Boise Cascade
Per : [illegible] **Signature :** [illegible] **Date :** 4-27-09

White (Generator Return Copy) Yellow (Transporter Copy) Pink (Receiving Facility Copy) Golden Rod (Generator 1st Copy)

EPAPA010000575

CES Environmental Services, Inc.

Bill Of Lading # : 85091

Folder ID :	White Liquor Caustic

Original – Shipper Provided Short Form Straight Bill of Lading – Not Negotiable – Domestic

SHIPPED FROM :
CES Environmental Services - Port Arthur
2420 S. Gulfway Drive
Port Arthur , TX 77640

WHITE LIQUOR WHITE LIQUOR WHITE LIQUOR
11a) HOU-2375
11b)
11c)
11c)

The property described below, in apparent good order, except as noted (content and condition of packages unknown), marked, consigned, and destined as indicated below, which said carrier (the word carrier being understood throughout this as meaning any person or corporation authorized to be in possession of the property under the contract) agrees to carry to its usual place of delivery at said destination, if on its route, otherwise to deliver to another carrier on the route to said destination. This Bill of Lading is a receipt for goods; it is not of itself a contract of carriage. It is mutually agreed, as to each carrier of all or as to any said over all or any portion of said route to destination, and as to each party at any time interested in all or any of said property, that every service to be performed hereunder shall be subject to all the terms and conditions contained in the applicable contract between shipper and carrier or intermediary.

For payment: Charges to be billed to Shipper or the "Billed to" party are set forth in the governing contract with Shipper. No charges other than those contained therein may be billed to Shipper or the "Billed to" party without prior written consent of Shipper. The extra copy of this Bill of Lading, furnished at the time of shipment, must be attached to the freight bill submitted to Shipper or the "Billed to" party and sent to:

CONSIGNED TO :
Boise Cascade
4200 Hwy 190 West
DeRidder , LA 70634

CARRIER :
CES Environmental (Port Arthur)
2420 Gulfway Dr.
Port Arthur , TX 77640

This is to certify that the product stated below are properly classified, described, packaged, marked and labeled and is in proper condition for transportation according to the applicable regulations of the Department of Transportation. If this Shipment moves between to ports by a carrier by water, the law requires that the Bill of Lading shall state whether it is "carrier's or shipper's weight."

Intermodal Certificate: All information required by Federal Highway Administration regulations at 49 CFR 390.5409 implementing the Intermodal Safe Container Act of 1992 is set forth on the face of this bill of lading. The shipper name herein is the tendering party.

Haz	Container No.	Container Type	Total Quantity	Unit Wt/Vol	Description of Materials, Special Marks, and Exceptions
No	1	TT	45260	P	RQ, Corrosive liquids, n.o.s. (WHITE LIQUOR CAUSTIC), 8, UN1760, PG II

4/27/09

Shipper : CES Environmental Services - Port Arthur
Per : Suzy Mock **Signature :** Suzy Mock **Date :** 4/27/09

Carrier CES Environmental (Port Arthur)
Per : Kevin Wilson **Signature :** Kevin Wilson **Date :** 4-27-09

Receiving Facility : Boise Cascade
Per : _____ **Signature :** _____ **Date :** 4/27/09

White (Generator Return Copy) Yellow (Transporter Copy) Pink (Receiving Facility Copy) Golden Rod (Generator 1st Copy)

CES Environmental Services, Inc.

Bill Of Lading # : 85104

Folder ID :	CES Environmental Services Sale of Sulfidic Caustic

Original – Shipper Provided Short Form Straight Bill of Lading – Not Negotiable – Domestic

SHIPPED FROM :
CES Environmental Services - Port Arthur
2420 S. Gulfway Drive
Port Arthur , TX 77640
(713) 676-1460

Release #
11a) PA-2375
11b)
11c)
11c)

The property described below, in apparent good order, except as noted (content and condition of packages unknown), marked, consigned, and destined as indicated below, which said carrier (the word carrier being understood throughout this as meaning any person or corporation authorized to be in possession of the property under the contract) agrees to carry to its usual place of delivery at said destination, if on its route, otherwise to deliver to another carrier on the route to said destination. This Bill of Lading is a receipt for goods; it is not of itself a contract of carriage. It is mutually agreed, as to each carrier of all or as to any said over all or any portion of said route to destination, and as to each party at any time interested in all or any of said property, that every service to be performed hereunder shall be subject to all the terms and conditions contained in the applicable contract between shipper and carrier or intermediary.

For payment: Charges to be billed to Shipper or the "Billed to" party are set forth in the governing contract with Shipper. No charges other than those contained therein may be billed to Shipper or the "Billed to" party without prior written consent of Shipper. The extra copy of this Bill of Lading, furnished at the time of shipment, must be attached to the freight bill submitted to Shipper or the "Billed to" party and sent to:

CONSIGNED TO :
International Paper
300 Williams Lake Road
Pineville , LA 71360

CARRIER :
CES Environmental Services, Inc.
4904 Griggs Rd.
Houston , TX 77021

This is to certify that the product stated below are properly classified, described, packaged, marked and labeled and is in proper condition for transportation according to the applicable regulations of the Department of Transportation. If this Shipment moves between to ports by a carrier by water, the law requires that the Bill of Lading shall state whether it is "carrier's or shipper's weight."

Intermodal Certificate: All information required by Federal Highway Administration regulations at 49 CFR 390.5(B) implementing the Intermodal Safe Container Act of 1992 is set forth on the face of this bill of lading. The shipper name herein is the tendering party.

Haz	Container No.	Container Type	Total Quantity	Unit Wt/Vol	Description of Materials, Special Marks, and Exceptions
No	1	TT	42100	P	RQ, Corrosive liquids, n.o.s. (containing sodium hydroxide), 8, UN1760, PG II
No					"SOCHEM FREE SULFIDIC CAUSTIC"

Shipper : CES Environmental Services - Port Arthur
Per : Suzi Mock **Signature :** Suz Mock **Date :** 4/27/09

Carrier CES Environmental Services, Inc.
Per : H. Whitehead **Signature :** C. Sumpter **Date :** 4-27-09

Receiving Facility : International Paper
Per : _____ **Signature :** C. Sumpter **Date :** 4-27-09

White (Generator Return Copy) Yellow (Transporter Copy) Pink (Receiving Facility Copy) Golden Rod (Generator 1st Copy)

CES Environmental Services, Inc.

Bill Of Lading # : 85070

Folder ID :	Spent Sulfidic Caustic

Original – Shipper Provided Short Form Straight Bill of Lading – Not Negotiable – Domestic

SHIPPED FROM :
CES Environmental Services - Port Arthur
2420 S. Gulfway Drive
Port Arthur , TX 77640

11a) HOU-2375
11b)
11c)
11c)

The property described below, in apparent good order, except as noted (content and condition of packages unknown), marked, consigned, and destined as indicated below, which said carrier (the word carrier being understood throughout this as meaning any person or corporation authorized to be in possession of the property under the contract) agrees to carry to its usual place of delivery at said destination, if on its route, otherwise to deliver to another carrier on the route to said destination. This Bill of Lading is a receipt for goods; it is not of itself a contract of carriage. It is mutually agreed, as to each carrier of all or as to any said over all or any portion of said route to destination, and as to each party at any time interested in all or any of said property, that every service to be performed hereunder shall be subject to all the terms and conditions contained in the applicable contract between shipper and carrier or intermediary.

For payment: Charges to be billed to Shipper or the "Billed to" party are set forth in the governing contract with Shipper. No charges other than those contained therein may be billed to Shipper or the "Billed to" party without prior written consent of Shipper. The extra copy of this Bill of Lading, furnished at the time of shipment, must be attached to the freight bill submitted to Shipper or the "Billed to" party and sent to:

CONSIGNED TO :
Boise Cascade
4200 Hwy 190 West
DeRidder , LA 70634

12:30
12:50

CARRIER :
CES Environmental (Port Arthur)
2420 Gulfway Dr.
Port Arthur , TX 77640

This is to certify that the product stated below are properly classified, described, packaged, marked and labeled and is in proper condition for transportation according to the applicable regulations of the Department of Transportation. If this Shipment moves between to ports by a carrier by water, the law requires that the Bill of Lading shall state whether it is "carrier's or shipper's weight."

Intermodal Certificate: All information required by Federal Highway Administration regulations at 49 CFR 390.5(d) implementing the Intermodal Safe Container Act of 1992 is set forth on the face of this bill of lading. The shipper name herein is the tendering party.

Haz	Container No.	Container Type	Total Quantity	Unit Wt/Vol	Description of Materials, Special Marks, and Exceptions
No	1	TT	57,420	P	RQ, Corrosive liquids, n.o.s. (weak caustic solution), 8, UN1760, PG II
No					""delivery of "Weak Caustic Solution" to the Green tank # 3248SDL""

Shipper : CES Environmental Services - Port Arthur
Per : Jay Matlock Signature : Date : 4-27-09

Carrier CES Environmental (Port Arthur)
Per : LeRoy Brown Signature : Date : 4-27-09

Receiving Facility : Boise Cascade
Per : Richard Swann Signature : Date : 4-27-09

White (Generator Return Copy) Yellow (Transporter Copy) Pink (Receiving Facility Copy) Golden Rod (Generator 1st Copy)

CES Environmental Services, Inc.

Bill Of Lading # : 85073

Folder ID :	Spent Sulfidic Caustic

Original – Shipper Provided Short Form Straight Bill of Lading – Not Negotiable – Domestic

SHIPPED FROM :
CES Environmental Services - Port Arthur
2420 S. Gulfway Drive
Port Arthur , TX 77640

11a) HOU-2375
11b)
11c)
11c)

The property described below, in apparent good order, except as noted (content and condition of packages unknown), marked, consigned, and destined as indicated below, which said carrier (the word carrier being understood throughout this as meaning any person or corporation authorized to be in possession of the property under the contract) agrees to carry to its usual place of delivery at said destination, if on its route, otherwise to deliver to another carrier on the route to said destination. This Bill of Lading is a receipt for goods; it is not of itself a contract of carriage. It is mutually agreed, as to each carrier of all or as to any said over all or any portion of said route to destination, and as to each party at any time interested in all or any of said property, that every service to be performed hereunder shall be subject to all the terms and conditions contained in the applicable contract between shipper and carrier or intermediary.

For payment: Charges to be billed to Shipper or the "Billed to" party are set forth in the governing contract with Shipper. No charges other than those contained therein may be billed to Shipper or the "Billed to" party without prior written consent of Shipper. The extra copy of this Bill of Lading, furnished at the time of shipment, must be attached to the freight bill submitted to Shipper or the "Billed to" party and sent to:

CONSIGNED TO :
Boise Cascade
4200 Hwy 190 West
DeRidder , LA 70634

CARRIER :
CES Environmental (Port Arthur)
2420 Gulfway Dr.
Port Arthur , TX 77640

This is to certify that the product stated below are properly classified, described, packaged, marked and labeled and is in proper condition for transportation according to the applicable regulations of the Department of Transportation. If this Shipment moves between to ports by a carrier by water, the law requires that the Bill of Lading shall state whether it is "carrier's or shipper's weight."

Intermodal Certificate: All information required by Federal Highway Administration regulations at 49 CFR 390.5(d) implementing the Intermodal Safe Container Act of 1992 is set forth on the face of this bill of lading. The shipper name herein is the tendering party.

Haz	Container No.	Container Type	Total Quantity	Unit Wt/Vol	Description of Materials, Special Marks, and Exceptions
No	1	TT	44900	P	RQ, Corrosive liquids, n.o.s. (weak caustic solution), 8, UN1760, PG II
No					**delivery of "Weak Caustic Solution" to the Green tank # 3246SDL**

Shipper : CES Environmental Services - Port Arthur
Per : Suzi Mock **Signature :** Suzi Mock **Date :** 4/27/09

Carrier CES Environmental (Port Arthur)
Per : Juan Frias **Signature :** [illegible] **Date :** 4-27-09

Receiving Facility : Boise Cascade
Per : [illegible] **Signature :** [illegible] **Date :** [illegible]

White (Generator Return Copy) Yellow (Transporter Copy) Pink (Receiving Facility Copy) Golden Rod (Generator 1st Copy)

CES Environmental Services, Inc.

Bill Of Lading # : 85072

Folder ID :	Spent Sulfidic Caustic

Original – Shipper Provided Short Form Straight Bill of Lading – Not Negotiable – Domestic

SHIPPED FROM :
CES Environmental Services - Port Arthur
2420 S. Gulfway Drive
Port Arthur , TX 77640

11a) HOU-2375
11b)
11c)
11c)

The property described below, in apparent good order, except as noted (content and condition of packages unknown), marked, consigned, and destined as indicated below, which said carrier (the word carrier being understood throughout this as meaning any person or corporation authorized to be in possession of the property under the contract) agrees to carry to its usual place of delivery at said destination, if on its route, otherwise to deliver to another carrier on the route to said destination. *This Bill of Lading is a receipt for goods; it is not of itself a contract of carriage. It is mutually agreed, as to each carrier of all or as to any said over all or any portion of said route to destination, and as to each party at any time interested in all or any of said property, that every service to be performed hereunder shall be subject to all the terms and conditions contained in the applicable contract* between shipper and carrier or intermediary.

For payment: Charges to be billed to Shipper or the "Billed to" party are set forth in the governing contract with Shipper. No charges other than those contained therein may be billed to Shipper or the "Billed to" party without prior written consent of Shipper. The extra copy of this Bill of Lading, furnished at the time of shipment, must be attached to the freight bill submitted to Shipper or the "Billed to" party and sent to:

CONSIGNED TO :
Boise Cascade
4200 Hwy 190 West
DeRidder , LA 70634

CARRIER :
CES Environmental (Port Arthur)
2420 Gulfway Dr.
Port Arthur , TX 77640

This is to certify that the product stated below are properly classified, described, packaged, marked and labeled and is in proper condition for transportation according to the applicable regulations of the Department of Transportation. If this Shipment moves between to ports by a carrier by water, the law requires that the Bill of Lading shall state whether it is "carrier's or shipper's weight."

Intermodal Certificate: All information required by Federal Highway Administration regulations at 49 CFR 390.5(B) implementing the Intermodal Safe Container Act of 1992 is set forth on the face of this bill of lading. The shipper name herein is the tendering party.

Haz	Container No.	Container Type	Total Quantity	Unit Wt/Vol	Description of Materials, Special Marks, and Exceptions
No	1	TT	44890	P	RQ, Corrosive liquids, n.o.s. (weak caustic solution), 8, UN1760, PG II
No					""delivery of "Weak Caustic Solution" to the Green tank #3246SDL""

Shipper : CES Environmental Services - Port Arthur
Per : [illegible] **Signature :** [illegible] **Date :** 4-27-09

Carrier CES Environmental (Port Arthur)
Per : Kevin Wilson **Signature :** [illegible] **Date :** 4-27-09

Receiving Facility : Boise Cascade
Per : [illegible] **Signature :** [illegible] **Date :** 4-27-09

White (Generator Return Copy) Yellow (Transporter Copy) Pink (Receiving Facility Copy) Golden Rod (Generator 1st Copy)

CES Environmental Services, Inc.

Bill Of Lading # : **85106**

Truck # 2001
Trl - # 269

Folder ID :	CES Environmental Services Sale of Sulfidic Caustic

Original – Shipper Provided Short Form Straight Bill of Lading – Not Negotiable – Domestic

SHIPPED FROM :
CES Environmental Services - Port Arthur
2420 S. Gulfway Drive
Port Arthur , TX 77640
(713) 676-1460

Release #
11a) PA-2375
11b)
11c)
11c)

The property described below, in apparent good order, except as noted (content and condition of packages unknown), marked, consigned, and destined as indicated below, which said carrier (the word carrier being understood throughout this as meaning any person or corporation authorized to be in possession of the property under the contract) agrees to carry to its unusual place of delivery at said destination, if on its route, otherwise to deliver to another carrier on the route to said destination. This Bill of Lading is a receipt for goods; it is not of itself a contract of carriage. It is mutually agreed, as to each carrier of all or as to any said over all or any portion of said route to destination, and as to each party at any time interested in all or any of said property, that every service to be performed hereunder shall be subject to all the terms and conditions contained in the applicable contract between shipper and carrier or intermediary.

For payment: Charges to be billed to Shipper or the "Billed to" party are set forth in the governing contract with Shipper. No charges other than those contained therein may be billed to Shipper or the "Billed to" party without prior written consent of Shipper. The extra copy of this Bill of Lading, furnished at the time of shipment, must be attached to the freight bill submitted to Shipper or the "Billed to" party and sent to:

CONSIGNED TO :
International Paper
300 Williams Lake Road
Pineville , LA 71360

CARRIER :
CES Environmental Services, Inc.
4904 Griggs Rd.
Houston , TX 77021

This is to certify that the product stated below are properly classified, described, packaged, marked and labeled and is in proper condition for transportation according to the applicable regulations of the Department of Transportation. If this Shipment moves between to ports by a carrier by water, the law requires that the Bill of Lading shall state whether it is "carrier's or shipper's weight."

Intermodal Certificate: All information required by Federal Highway Administration regulations at 49 CFR 390.5465 implementing the Intermodal Safe Container Act of 1992 is set forth on the face of this bill of lading. The shipper name herein is the tendering party.

Haz	Container No.	Container Type	Total Quantity	Unit Wt/Vol	Description of Materials, Special Marks, and Exceptions
No	1	TT	4500	P	RQ, Corrosive liquids, n.o.s. (containing sodium hydroxide), 8, UN1760, PG II
No					"SOCHEM FREE SULFIDIC CAUSTIC"

Shipper : CES Environmental Services - Port Arthur
Per : Suzi Mock **Signature :** Suzi Mock **Date :** 4/27/09

Carrier CES Environmental Services, Inc.
Per : JUAN MENDOZA **Signature :** [signature] **Date :** 4-27-09

Receiving Facility : International Paper
Per : _____ **Signature :** [signature] **Date :** _____

White (Generator Return Copy) Yellow (Transporter Copy) Pink (Receiving Facility Copy) Golden Rod (Generator 1st Copy)

#224

Please print or type. (Form designed for use on elite (12-pitch) typewriter.) Form Approved. OMB No. 2050-0039

UNIFORM HAZARDOUS WASTE MANIFEST

1. Generator ID Number
2. Page 1 of
3. Emergency Response Phone
4. Manifest Tracking Number 005595475 JJK

GENERATOR

5. Generator's Name and Mailing Address
Generator's Site Address (if different than mailing address)
Generator's Phone:

6. Transporter 1 Company Name
U.S. EPA ID Number

7. Transporter 2 Company Name
U.S. EPA ID Number

8. Designated Facility Name and Site Address
U.S. EPA ID Number
Facility's Phone:
N/A

9a. HM	9b. U.S. DOT Description (including Proper Shipping Name, Hazard Class, ID Number, and Packing Group (if any))	10. Containers No.	10. Containers Type	11. Total Quantity	12. Unit Wt./Vol.	13. Waste Codes
				5 PAIL		
	2.					
	3.					
	4.					

14. Special Handling Instructions and Additional Information
613590 613598 634196

15. **GENERATOR'S/OFFEROR'S CERTIFICATION:** I hereby declare that the contents of this consignment are fully and accurately described above by the proper shipping name, and are classified, packaged, marked and labeled/placarded, and are in all respects in proper condition for transport according to applicable international and national governmental regulations. If export shipment and I am the Primary Exporter, I certify that the contents of this consignment conform to the terms of the attached EPA Acknowledgment of Consent.
I certify that the waste minimization statement identified in 40 CFR 262.27(a) (if I am a large quantity generator) or (b) (if I am a small quantity generator) is true.

Generator's/Offeror's Printed/Typed Name | Signature | Month 4 | Day 25 | Year 09

INT'L

16. International Shipments ☐ Import to U.S. ☐ Export from U.S. Port of entry/exit:
Transporter signature (for exports only): Date leaving U.S.:

TRANSPORTER

17. Transporter Acknowledgment of Receipt of Materials
Transporter 1 Printed/Typed Name | Signature | Month 4 | Day 25 | Year 09
Transporter 2 Printed/Typed Name | Signature | Month | Day | Year

DESIGNATED FACILITY

18. Discrepancy
18a. Discrepancy Indication Space ☐ Quantity ☐ Type ☐ Residue ☐ Partial Rejection ☐ Full Rejection
Manifest Reference Number:
18b. Alternate Facility (or Generator) U.S. EPA ID Number
Facility's Phone:
18c. Signature of Alternate Facility (or Generator) | Month | Day | Year

19. Hazardous Waste Report Management Method Codes (i.e., codes for hazardous waste treatment, disposal, and recycling systems)
1. 2. 3. 4.

20. Designated Facility Owner or Operator: Certification of receipt of hazardous materials covered by the manifest except as noted in Item 18a
Printed/Typed Name | Signature | Month 4 | Day 13 | Year

EPA Form 8700-22 (Rev. 3-05) Previous editions are obsolete

EPAPA010000582

CES Environmental Services, Inc.

Bill Of Lading # : 85110

Folder ID :	CES Environmental Services Sale of Sulfidic Caustic

Original – Shipper Provided Short Form Straight Bill of Lading – Not Negotiable – Domestic

SHIPPED FROM :
CES Environmental Services - Port Arthur
2420 S. Gulfway Drive
Port Arthur , TX 77640
(713) 676-1460

Release #
11a) PA-2375
11b)
11c)
11c)

The property described below, in apparent good order, except as noted (content and condition of packages unknown), marked, consigned, and destined as indicated below, which said carrier (the word carrier being understood throughout this as meaning any person or corporation authorized to be in possession of the property under the contract) agrees to carry to its unusual place of delivery at said destination, if on its route, otherwise to deliver to another carrier on the route to said destination. This Bill of Lading is a receipt for goods; it is not of itself a contract of carriage. It is mutually agreed, as to each carrier of all or as to any said over all or any portion of said route to destination, and as to each party at any time interested in all or any of said property, that every service to be performed hereunder shall be subject to all the terms and conditions contained in the applicable contract between shipper and carrier or intermediary.

For payment: Charges to be billed to Shipper or the "Billed to" party are set forth in the governing contract with Shipper. No charges other than those contained therein may be billed to Shipper or the "Billed to" party without prior written consent of Shipper. The extra copy of this Bill of Lading, furnished at the time of shipment, must be attached to the freight bill submitted to Shipper or the "Billed to" party and sent to:

CONSIGNED TO :
International Paper
300 Williams Lake Road
Pineville , LA 71360

CARRIER :
CES Environmental Services, Inc.
4904 Griggs Rd.
Houston , TX 77021

This is to certify that the product stated below are properly classified, described, packaged, marked and labeled and is in proper condition for transportation according to the applicable regulations of the Department of Transportation. If this Shipment moves between to ports by a carrier by water, the law requires that the Bill of Lading shall state whether it is "carrier's or shipper's weight."

Intermodal Certificate: All information required by Federal Highway Administration regulations at 49 CFR 390.5 implementing the Intermodal Safe Container Act of 1332 is set forth on the face of this bill of lading. The shipper name herein is the tendering party.

Haz	Container No.	Container Type	Total Quantity	Unit Wt/Vol	Description of Materials, Special Marks, and Exceptions
No	1	TT	47700	P	RQ, Corrosive liquids, n.o.s. (containing sodium hydroxide), 8, UN1760, PG II
No					"SOCHEM FREE SULFIDIC CAUSTIC"

Shipper : CES Environmental Services - Port Arthur
Per: Suz Mock **Signature:** Suz Mock **Date :** 4/28/09

Carrier CES Environmental Services, Inc.
Per : Kevin Wilson **Signature :** Kevin Wilson **Date :** 4.28.09

Receiving Facility : International Paper
Per : _____ **Signature :** _____ **Date :** _____

White (Generator Return Copy) Yellow (Transporter Copy) Pink (Receiving Facility Copy) Golden Rod (Generator 1st Copy)

CES Environmental Services, Inc.

Bill Of Lading # : 85112

Folder ID :	CES Environmental Services Sale of Sulfidic Caustic

Original – Shipper Provided Short Form Straight Bill of Lading – Not Negotiable – Domestic

SHIPPED FROM :
CES Environmental Services - Port Arthur
2420 S. Gulfway Drive
Port Arthur , TX 77640
(713) 676-1460

Release #
11a) PA-2375
11b)
11c)
11c)

The property described below, in apparent good order, except as noted (content and condition of packages unknown), marked, consigned, and destined as indicated below, which said carrier (the word carrier being understood throughout this as meaning any person or corporation authorized to be in possession of the property under the contract) agrees to carry to its usual place of delivery at said destination, if on its route, otherwise to deliver to another carrier on the route to said destination. This Bill of Lading is a receipt for goods; it is not of itself a contract of carriage. It is mutually agreed, as to each carrier of all or as to any said over all or any portion of said route to destination, and as to each party at any time interested in all or any of said property, that every service to be performed hereunder shall be subject to all the terms and conditions contained in the applicable contract between shipper and carrier or intermediary.

For payment: Charges to be billed to Shipper or the "Billed to" party are set forth in the governing contract with Shipper. No charges other than those contained therein may be billed to Shipper or the "Billed to" party without prior written consent of Shipper. The extra copy of this Bill of Lading, furnished at the time of shipment, must be attached to the freight bill submitted to Shipper or the "Billed to" party and sent to:

CONSIGNED TO :
International Paper
300 Williams Lake Road
Pineville , LA 71360

CARRIER :
CES Environmental Services, Inc.
4904 Griggs Rd.
Houston , TX 77021

This is to certify that the product stated below are properly classified, described, packaged, marked and labeled and is in proper condition for transportation according to the applicable regulations of the Department of Transportation. If this shipment moves between to ports by a carrier by water, the law requires that the Bill of Lading shall state whether it is "carrier's or shipper's weight."

Intermodal Certificate: All information required by Federal Highway Administration regulations at 49 CFR 390.5(d) implementing the Intermodal Safe Container Act of 1992 is set forth on the face of this bill of lading. The shipper name herein is the tendering party.

Haz	Container No.	Container Type	Total Quantity	Unit Wt/Vol	Description of Materials, Special Marks, and Exceptions
No	1	TT	4800	PG	RQ, Corrosive liquids, n.o.s. (containing sodium hydroxide), 8, UN1760, PG II
No					"SOCHEM FREE SULFIDIC CAUSTIC"

Shipper : CES Environmental Services - Port Arthur
Per : Suz Mock **Signature :** Suz Mock **Date :** 4/29/09

Carrier CES Environmental Services, Inc.
Per : KEVIN WILSON **Signature :** Kevin Wilson **Date :** 4-29-09

Receiving Facility : International Paper
Per : _____ **Signature :** _____ **Date :** _____

White (Generator Return Copy) Yellow (Transporter Copy) Pink (Receiving Facility Copy) Golden Rod (Generator 1st Copy)

CES Environmental Services, Inc.

Bill Of Lading # : 85097

Folder ID :	White Liquor Caustic

Original – Shipper Provided Short Form Straight Bill of Lading – Not Negotiable – Domestic

SHIPPED FROM :
CES Environmental Services - Port Arthur
2420 S. Gulfway Drive
Port Arthur , TX 77640

WHITE LIQUOR WHITE LIQUOR WHITE LIQUOR
11a) HOU-2375 85097
11b)
11c)
11c)

The property described below, in apparent good order, except as noted (content and condition of packages unknown), marked, consigned, and destined as indicated below, which said carrier (the word carrier being understood throughout this as meaning any person or corporation authorized to be in possession of the property under the contract) agrees to carry to its usual place of delivery at said destination, if on its route, otherwise to deliver to another carrier on the route to said destination. *This Bill of Lading is a receipt for goods; it is not of itself a contract of carriage. It is mutually agreed, as to each carrier of all or as to any said over all or any portion of said route to destination, and as to each party at any time interested in all or any of said property, that every service to be performed hereunder shall be subject to all the terms and conditions contained in the applicable contract* between shipper and carrier or intermediary.

For payment: Charges to be billed to Shipper or the "Billed to" party are set forth in the governing contract with Shipper. No charges other than those contained therein may be billed to Shipper or the "Billed to" party without prior written consent of Shipper. The extra copy of this Bill of Lading, furnished at the time of shipment, must be attached to the freight bill submitted to Shipper or the "Billed to" party and sent to:

CONSIGNED TO :
Boise Cascade
4200 Hwy 190 West
DeRidder , LA 70634

13100

CARRIER :
CES Environmental (Port Arthur)
2420 Gulfway Dr.
Port Arthur , TX 77640

This is to certify that the product stated below are properly classified, described, packaged, marked and labeled and is in proper condition for transportation according to the applicable regulations of the Department of Transportation. If this Shipment moves between to ports by a carrier by water, the law requires that the Bill of Lading shall state whether it is "carrier's or shipper's weight."

Intermodal Certificate: All information required by Federal Highway Administration regulations at 49 CFR 390.5400 implementing the Intermodal Safe Container Act of 1992 is set forth on the face of this bill of lading. The shipper name herein is the tendering party.

Haz	Container No.	Container Type	Total Quantity	Unit Wt/Vol	Description of Materials, Special Marks, and Exceptions
No	1	TT	52,100	P	RQ, Corrosive liquids, n.o.s. (WHITE LIQUOR CAUSTIC), 8, UN1760, PG II
					43009 388458 388148 210

Shipper : CES Environmental Services - Port Arthur
Per : B Cumberlin **Signature :** **Date :** 4-30-09

Carrier CES Environmental (Port Arthur)
Per : LeRoy Brown **Signature** **Date :** 4-30-09

Receiving Facility : Boise Cascade
Per : **Signature :** **Date :** 43009

White (Generator Return Copy) Yellow (Transporter Copy) Pink (Receiving Facility Copy) Golden Rod (Generator 1st Copy)

CES Environmental Services, Inc.

Bill Of Lading # : 85131

Truck # 2001
TRLR # 261

Folder ID :	CES Environmental Services Sale of Sulfidic Caustic

Original – Shipper Provided Short Form Straight Bill of Lading – Not Negotiable – Domestic

SHIPPED FROM :
CES Environmental Services @ KMTEX
2450 South Gulfway Dr.
Port Arthur , TX 77641
(713) 676-1460

Release #
11a) PA-2375
11b)
11c)
11c)

The property described below, in apparent good order, except as noted (contents and condition of packages unknown), marked, consigned, and destined as indicated below, which said carrier (the word carrier being understood throughout this as meaning any person or corporation authorized to be in possession of the property under the contract) agrees to carry to its usual place of delivery at said destination, if on its route, otherwise to deliver to another carrier on the route to said destination. This Bill of Lading is a receipt for goods; it is not of itself a contract of carriage. It is mutually agreed, as to each carrier of all or as to any said over all or any portion of said route to destination, and as to each party at any time interested in all or any of said property, that every service to be performed hereunder shall be subject to all the terms and conditions contained in the applicable contract between shipper and carrier or intermediary.

For payment: Charges to be billed to Shipper or the "Billed to" party are set forth in the governing contract with Shipper. No charges other than those contained therein may be billed to Shipper or the "Billed to" party without prior written consent of Shipper. The extra copy of this Bill of Lading, furnished at the time of shipment, must be attached to the freight bill submitted to Shipper or the "Billed to" party and sent to:

CONSIGNED TO :
International Paper
300 Williams Lake Road
Pineville , LA 71360

CARRIER :
CES Environmental Services, Inc.
4904 Griggs Rd.
Houston , TX 77021

This is to certify that the product stated below are properly classified, described, packaged, marked and labeled and is in proper condition for transportation according to the applicable regulations of the Department of Transportation. If this Shipment moves between to ports by a carrier by water, the law requires that the Bill of Lading shall state whether it is "carrier's or shipper's weight."

Intermodal Certificate: All information required by Federal Highway Administration regulations at 49 CFR 390.5449 implementing the Intermodal Safe Container Act of 1992 is set forth on the face of this bill of lading. The shipper name herein is the tendering party.

Haz	Container No.	Container Type	Total Quantity	Unit Wt/Vol	Description of Materials, Special Marks, and Exceptions
No	1	TT	44420	P	RQ, Corrosive liquids, n.o.s. (containing sodium hydroxide), 8, UN1760, PG II
No					"SOCHEM FREE SULFIDIC CAUSTIC"

Shipper : CES Environmental Services @ KMTEX
Per : R Jamison **Signature :** R Jamison **Date :** 4-30-09

Carrier CES Environmental Services, Inc.
Per : JUAN MENDOZA **Signature :** [signature] **Date :** 4-30-09

Receiving Facility : International Paper
Per : _____ **Signature :** [signature] **Date :** _____

White (Generator Return Copy) Yellow (Transporter Copy) Pink (Receiving Facility Copy) Golden Rod (Generator 1st Copy)

CES Environmental Services, Inc.

Bill Of Lading # : 85082

Folder ID :	Spent Sulfidic Caustic

Original -- Shipper Provided Short Form Straight Bill of Lading -- Not Negotiable -- Domestic

SHIPPED FROM :
CES Environmental Services - Port Arthur
2420 S. Gulfway Drive
Port Arthur , TX 77640

11a) HOU-2375
11b)
11c)
11c)

The property described below, in apparent good order, except as noted (content and condition of packages unknown), marked, consigned, and destined as indicated below, which said carrier (the word carrier being understood throughout this as meaning any person or corporation authorized to be in possession of the property under the contract) agrees to carry to its usual place of delivery at said destination, if on its route, otherwise to deliver to another carrier on the route to said destination. This Bill of Lading is a receipt for goods; it is not of itself a contract of carriage. It is mutually agreed, as to each carrier of all or as to any said over all or any portion of said route to destination, and as to each party at any time interested in all or any of said property, that every service to be performed hereunder shall be subject to all the terms and conditions contained in the applicable contract between shipper and carrier or intermediary.

For payment: Charges to be billed to Shipper or the "Billed to" party are set forth in the governing contract with Shipper. No charges other than those contained therein may be billed to Shipper or the "Billed to" party without prior written consent of Shipper. The extra copy of this Bill of Lading, furnished at the time of shipment, must be attached to the freight bill submitted to Shipper or the "Billed to" party and sent to:

CONSIGNED TO :
Boise Cascade
4200 Hwy 190 West
DeRidder , LA 70634

CARRIER :
CES Environmental (Port Arthur)
2420 Gulfway Dr.
Port Arthur , TX 77640

This is to certify that the product stated below are properly classified, described, packaged, marked and labeled and is in proper condition for transportation according to the applicable regulations of the Department of Transportation. If this Shipment moves between to ports by a carrier by water, the law requires that the Bill of Lading shall state whether it is "carrier's or shipper's weight."

Intermodal Certificate: All information required by Federal Highway Administration regulations at 49 CFR 390.5(d) implementing the Intermodal Safe Container Act of 1982 is set forth on the face of this bill of lading. The shipper name herein is the tendering party.

Haz	Container No.	Container Type	Total Quantity	Unit Wt/Vol	Description of Materials, Special Marks, and Exceptions
No	1	TT	44,780	P	RQ, Corrosive liquids, n.o.s. (weak caustic solution), 8, UN1760, PG II
No					""delivery of "Weak Caustic Solution" to the Green tank # 3246SDL""

Shipper : CES Environmental Services - Port Arthur
Per : [illegible] **Signature :** [illegible] **Date :** 4-30-09

Carrier CES Environmental (Port Arthur)
Per : WILFRIDO ABREU **Signature** [illegible] **Date :** 4/30/09

Receiving Facility : Boise Cascade
Per : S Sloyder **Signature :** R Sloyder **Date :** 4-30-09

White (Generator Return Copy) Yellow (Transporter Copy) Pink (Receiving Facility Copy) Golden Rod (Generator 1st Copy)

CES Environmental Services, Inc.

Bill Of Lading # : 85115

Folder ID :	CES Environmental Services Sale of Sulfidic Caustic

Original – Shipper Provided Short Form Straight Bill of Lading – Not Negotiable – Domestic

SHIPPED FROM :
CES Environmental Services - Port Arthur
2420 S. Gulfway Drive
Port Arthur , TX 77640
(713) 676-1460

Release #
11a) PA-2375
11b)
11c)
11c)

The property described below, in apparent good order, except as noted (content and condition of packages unknown), marked, consigned, and destined as indicated below, which said carrier (the word carrier being understood throughout this as meaning any person or corporation authorized to be in possession of the property under the contract) agrees to carry to its usual place of delivery at said destination, if on its route, otherwise to deliver to another carrier on the route to said destination. This Bill of Lading is a receipt for goods; it is not of itself a contract of carriage. It is mutually agreed, as to each carrier of all or as to any said over all or any portion of said route to destination, and as to each party at any time interested in all or any of said property, that every service to be performed hereunder shall be subject to all the terms and conditions contained in the applicable contract between shipper and carrier or intermediary.

For payment: Charges to be billed to Shipper or the "Billed to" party are set forth in the governing contract with Shipper. No charges other than those contained therein may be billed to Shipper or the "Billed to" party without prior written consent of Shipper. The extra copy of this Bill of Lading, furnished at the time of shipment, must be attached to the freight bill submitted to Shipper or the "Billed to" party and sent to:

CONSIGNED TO :
International Paper
300 Williams Lake Road
Pineville , LA 71360

CARRIER :
CES Environmental Services, Inc.
4904 Griggs Rd.
Houston , TX 77021

This is to certify that the product stated below are properly classified, described, packaged, marked and labeled and is in proper condition for transportation according to the applicable regulations of the Department of Transportation. If this Shipment moves between to ports by a carrier by water, the law requires that the Bill of Lading shall state whether it is "carrier's or shipper's weight."

Intermodal Certificate: All information required by Federal Highway Administration regulations at 49 CFR 390.5489 implementing the Intermodal Safe Container Act of 1992 is set forth on the face of this bill of lading. The shipper name herein is the tendering party.

Haz	Container No.	Container Type	Total Quantity	Unit Wt/Vol	Description of Materials, Special Marks, and Exceptions
No	1	TT 47960		P	RQ, Corrosive liquids, n.o.s. (containing sodium hydroxide), 8, UN1760, PG II
No					"SOCHEM FREE SULFIDIC CAUSTIC"

Shipper : CES Environmental Services - Port Arthur
Per : [illegible] **Signature :** [illegible] **Date :** 4-29-09

Carrier CES Environmental Services, Inc.
Per : R. Whitehead **Signature :** [illegible] **Date :** 4-30-08

Receiving Facility : International Paper
Per : _____ **Signature :** [illegible] **Date :** _____

White (Generator Return Copy) Yellow (Transporter Copy) Pink (Receiving Facility Copy) Golden Rod (Generator 1st Copy)

CES Environmental Services, Inc.

Bill Of Lading # : 85113

Folder ID :	CES Environmental Services Sale of Sulfidic Caustic

Original – Shipper Provided Short Form Straight Bill of Lading – Not Negotiable – Domestic

SHIPPED FROM :
CES Environmental Services - Port Arthur
2420 S. Gulfway Drive
Port Arthur , TX 77640
(713) 676-1460

Release #
11a) PA-2375
11b)
11c)
11c)

The property described below, in apparent good order, except as noted (content and condition of packages unknown), marked, consigned, and destined as indicated below, which said carrier (the word carrier being understood throughout this as meaning any person or corporation authorized to be in possession of the property under the contract) agrees to carry to its usual place of delivery at said destination, if on its route, otherwise to deliver to another carrier on the route to said destination. This Bill of Lading is a receipt for goods; it is not of itself a contract of carriage. It is mutually agreed, as to each carrier of all or as to any said over all or any portion of said route to destination, and as to each party at any time interested in all or any of said property, that every service to be performed hereunder shall be subject to all the terms and conditions contained in the applicable contract between shipper and carrier or intermediary.

For payment: Charges to be billed to Shipper or the "Billed to" party are set forth in the governing contract with Shipper. No charges other than those contained therein may be billed to Shipper or the "Billed to" party without prior written consent of Shipper. The extra copy of this Bill of Lading, furnished at the time of shipment, must be attached to the freight bill submitted to Shipper or the "Billed to" party and sent to:

CONSIGNED TO :
International Paper
300 Williams Lake Road
Pineville , LA 71360

CARRIER :
CES Environmental Services, Inc.
4904 Griggs Rd.
Houston , TX 77021

This is to certify that the product stated below are properly classified, described, packaged, marked and labeled and is in proper condition for transportation according to the applicable regulations of the Department of Transportation. If this Shipment moves between to ports by a carrier by water, the law requires that the Bill of Lading shall state whether it is "carrier's or shipper's weight."

Intermodal Certificate: All information required by Federal Highway Administration regulations at 49 CFR 390.5409 implementing the Intermodal Safe Container Act of 1992 is set forth on the face of this bill of lading. The shipper name herein is the tendering party.

Haz	Container No.	Container Type	Total Quantity	Unit Wt/Vol	Description of Materials, Special Marks, and Exceptions
No	1	TT	5000 Gal	P	RQ, Corrosive liquids, n.o.s. (containing sodium hydroxide), 8, UN1760, PG II
No					"SOCHEM FREE SULFIDIC CAUSTIC"

Shipper : CES Environmental Services - Port Arthur
Per : Suz Mock **Signature :** Suz Mock **Date :** 4/29/09

Carrier CES Environmental Services, Inc.
Per : [illegible] **Signature :** [illegible] **Date :**

Receiving Facility : International Paper
Per : [illegible] **Signature :** **Date :**

White (Generator Return Copy) Yellow (Transporter Copy) Pink (Receiving Facility Copy) Golden Rod (Generator 1st Copy)

CES Environmental Services, Inc.

Bill Of Lading # : 85077

Folder ID :	Spent Sulfidic Caustic

Original – Shipper Provided Short Form Straight Bill of Lading – Not Negotiable – Domestic

SHIPPED FROM :
CES Environmental Services - Port Arthur
2420 S. Gulfway Drive
Port Arthur , TX 77640

11a) HOU-2375
11b)
11c) 85077
11c)

The property described below, in apparent good order, except as noted (content and condition of packages unknown), marked, consigned, and destined as indicated below, which said carrier (the word carrier being understood throughout this as meaning any person or corporation authorized to be in possession of the property under the contract) agrees to carry to its usual place of delivery at said destination, if on its route, otherwise to deliver to another carrier on the route to said destination. This Bill of Lading is a receipt for goods; it is not of itself a contract of carriage. It is mutually agreed, as to each carrier of all or as to any said over all or any portion of said route to destination, and as to each party at any time interested in all or any of said property, that every service to be performed hereunder shall be subject to all the terms and conditions contained in the applicable contract between shipper and carrier or intermediary.

For payment: Charges to be billed to Shipper or the "Billed to" party are set forth in the governing contract with Shipper. No charges other than those contained therein may be billed to Shipper or the "Billed to" party without prior written consent of Shipper. The extra copy of this Bill of Lading, furnished at the time of shipment, must be attached to the freight bill submitted to Shipper or the "Billed to" party and sent to:

CONSIGNED TO :
Boise Cascade
4200 Hwy 190 West
DeRidder , LA 70634 76605

CARRIER :
CES Environmental (Port Arthur) 10:25
2420 Gulfway Dr.
Port Arthur , TX 77640

This is to certify that the product stated below are properly classified, described, packaged, marked and labeled and is in proper condition for transportation according to the applicable regulations of the Department of Transportation. If this Shipment moves between to ports by a carrier by water, the law requires that the Bill of Lading shall state whether it is "carrier's or shipper's weight."

Intermodal Certificate: All information required by Federal Highway Administration regulations at 49 CFR 390.5(d) implementing the Intermodal Safe Container Act of 1992 is set forth on the face of this bill of lading. The shipper name herein is the tendering party.

Haz	Container No.	Container Type	Total Quantity	Unit Wt/Vol	Description of Materials, Special Marks, and Exceptions
No	1	TT	48,440	P	RQ, Corrosive liquids, n.o.s. (weak caustic solution), 8, UN1760, PG II
No			48,280		""delivery of "Weak Caustic Solution" to the Green tank # 3248SDL""
			48,440		
					35 2599

Shipper : CES Environmental Services - Port Arthur
Per : Suz Moll **Signature :** Suz Moll **Date :** 4/29/09

Carrier CES Environmental (Port Arthur)
Per : LeRoy Brown **Signature :** LeRoy Brown **Date :** 4-29-09

Receiving Facility : Boise Cascade
Per : Richard Swanner **Signature :** [illegible] **Date :** 4-29-09

White (Generator Return Copy) Yellow (Transporter Copy) Pink (Receiving Facility Copy) Golden Rod (Generator 1st Copy)

CES Environmental Services, Inc.

Bill Of Lading # : 85095

Folder ID :	White Liquor Caustic

Original – Shipper Provided Short Form Straight Bill of Lading – Not Negotiable – Domestic

SHIPPED FROM :
CES Environmental Services - Port Arthur
2420 S. Gulfway Drive
Port Arthur , TX 77640

WHITE LIQUOR WHITE LIQUOR WHITE LIQUOR
11a) HOU-2375 85095
11b)
11c)
11c)

The property described below, in apparent good order, except as noted (content and condition of packages unknown), marked, consigned, and destined as indicated below, which said carrier (the word carrier being understood throughout this as meaning any person or corporation authorized to be in possession of the property under the contract) agrees to carry to its usual place of delivery at said destination, if on its route, otherwise to deliver to another carrier on the route to said destination. *This Bill of Lading is a receipt for goods, it is not of itself a contract of carriage. It is mutually agreed, as to each carrier of all or as to any said over all or any portion of said route to destination, and as to each party at any time interested in all or any of said property, that every service to be performed hereunder shall be subject to all the terms and conditions contained in the applicable contract* between shipper and carrier or intermediary.

For payment: Charges to be billed to Shipper or the "Billed to" party are set forth in the governing contract with Shipper. No charges other than those contained therein may be billed to Shipper or the "Billed to" party without prior written consent of Shipper. The extra copy of this Bill of Lading, furnished at the time of shipment, must be attached to the freight bill submitted to Shipper or the "Billed to" party and sent to:

CONSIGNED TO :
Boise Cascade NC 12:45
4200 Hwy 190 West 13:00
DeRidder , LA 70634

CARRIER :
CES Environmental (Port Arthur)
2420 Gulfway Dr.
Port Arthur , TX 77640

This is to certify that the product stated below are properly classified, described, packaged, marked and labeled and is in proper condition for transportation according to the applicable regulations of the Department of Transportation. If this Shipment moves between to ports by a carrier by water, the law requires that the Bill of Lading shall state whether it is "carrier's or shipper's weight."

Intermodal Certificate: All information required by Federal Highway Administration regulations at 49 CFR 390.5465 implementing the Intermodal Safe Container Act of 1992 is set forth on the face of this bill of lading. The shipper name herein is the tendering party.

Haz	Container No.	Container Type	Total Quantity	Unit Wt/Vol	Description of Materials, Special Marks, and Exceptions
No	1	TT	51,780	P	RQ, Corrosive liquids, n.o.s. (WHITE LIQUOR CAUSTIC), 8, UN1760, PG II
			25,880		4/29/09
			27,300		
			26,780		

Shipper : CES Environmental Services - Port Arthur
Per: Sue Mock **Signature:** Sue Mock **Date :** 4/29/09

Carrier CES Environmental (Port Arthur)
Per : LeRoy Brown **Signature :** LeRoy Brown **Date :** 4-29-09
4-29-09

Receiving Facility : Boise Cascade
Per : _____ **Signature :** [signature] **Date :** 4-29-09

White (Generator Return Copy) Yellow (Transporter Copy) Pink (Receiving Facility Copy) Golden Rod (Generator 1st Copy)

CES Environmental Services, Inc.

Bill Of Lading # : 85078

Folder ID :	Spent Sulfidic Caustic

Original – Shipper Provided Short Form Straight Bill of Lading – Not Negotiable – Domestic

SHIPPED FROM :
CES Environmental Services - Port Arthur
2420 S. Gulfway Drive
Port Arthur , TX 77640

11a) HOU-2375
11b)
11c)
11c)

The property described below, in apparent good order, except as noted (content and condition of packages unknown), marked, consigned, and destined as indicated below, which said carrier (the word carrier being understood throughout this as meaning any person or corporation authorized to be in possession of the property under the contract) agrees to carry to its usual place of delivery at said destination, if on its route, otherwise to deliver to another carrier on the route to said destination. This Bill of Lading is a receipt for goods, it is not of itself a contract of carriage. It is mutually agreed, as to each carrier of all or as to any said over all or any portion of said route to destination, and as to each party at any time interested in all or any of said property, that every service to be performed hereunder shall be subject to all the terms and conditions contained in the applicable contract between shipper and carrier or intermediary.

For payment: Charges to be billed to Shipper or the "Billed to" party are set forth in the governing contract with Shipper. No charges other than those contained therein may be billed to Shipper or the "Billed to" party without prior written consent of Shipper. The extra copy of this Bill of Lading, furnished at the time of shipment, must be attached to the freight bill submitted to Shipper or the "Billed to" party and sent to:

CONSIGNED TO :
Boise Cascade
4200 Hwy 190 West
DeRidder , LA 70634

CARRIER :
CES Environmental (Port Arthur)
2420 Gulfway Dr.
Port Arthur , TX 77640

This is to certify that the product stated below are properly classified, described, packaged, marked and labeled and is in proper condition for transportation according to the applicable regulations of the Department of Transportation. If this Shipment moves between to ports by a carrier by water, the law requires that the Bill of Lading shall state whether it is "carrier's or shipper's weight."

Intermodal Certificate: All information required by Federal Highway Administration regulations at 49 CFR 390.5(b) implementing the Intermodal Safe Container Act of 1992 is set forth on the face of this bill of lading. The shipper name herein is the tendering party.

Haz	Container No.	Container Type	Total Quantity	Unit Wt/Vol	Description of Materials, Special Marks, and Exceptions
No	1	TT	43,220	P	RQ, Corrosive liquids, n.o.s. (weak caustic solution), 8, UN1760, PG II
No					""delivery of "Weak Caustic Solution" to the Green tank # 3246SDL""

Shipper : CES Environmental Services - Port Arthur
Per : Sug Mock **Signature :** Sug Mock **Date :** 4/29/09

Carrier CES Environmental (Port Arthur)
Per : Jose Dominguez **Signature :** Jose Dominguez **Date :** 04 29 09

Receiving Facility : Boise Cascade
Per : Ridero **Signature :** [illegible] **Date :** [illegible]

White (Generator Return Copy) Yellow (Transporter Copy) Pink (Receiving Facility Copy) Golden Rod (Generator 1st Copy)

CES Environmental Services, Inc.

Bill Of Lading # : 85079

Folder ID :	Spent Sulfidic Caustic

Original – Shipper Provided Short Form Straight Bill of Lading – Not Negotiable – Domestic

SHIPPED FROM :
CES Environmental Services - Port Arthur
2420 S. Gulfway Drive
Port Arthur , TX 77640

11a) HOU-2375
11b)
11c)
11c)

The property described below, in apparent good order, except as noted (content and condition of packages unknown), marked, consigned, and destined as indicated below, which said carrier (the word carrier being understood throughout this as meaning any person or corporation authorized to be in possession of the property under the contract) agrees to carry to its usual place of delivery at said destination, if on its route, otherwise to deliver to another carrier on the route to said destination. This Bill of Lading is a receipt for goods; it is not of itself a contract of carriage. It is mutually agreed, as to each carrier of all or as to any said over all or any portion of said route to destination, and as to each party at any time interested in all or any of said property, that every service to be performed hereunder shall be subject to all the terms and conditions contained in the applicable contract between shipper and carrier or intermediary.

For payment: Charges to be billed to Shipper or the "Billed to" party are set forth in the governing contract with Shipper. No charges other than those contained therein may be billed to Shipper or the "Billed to" party without prior written consent of Shipper. The extra copy of this Bill of Lading, furnished at the time of shipment, must be attached to the freight bill submitted to Shipper or the "Billed to" party and sent to:

CONSIGNED TO :
Boise Cascade
4200 Hwy 190 West
DeRidder , LA 70634

CARRIER :
CES Environmental (Port Arthur)
2420 Gulfway Dr.
Port Arthur , TX 77640

This is to certify that the product stated below are properly classified, described, packaged, marked and labeled and is in proper condition for transportation according to the applicable regulations of the Department of Transportation. If this Shipment moves between to ports by a carrier by water, the law requires that the Bill of Lading shall state whether it is "carrier's or shipper's weight."

Intermodal Certificate: All information required by Federal Highway Administration regulations at 49 CFR 390.5449 implementing the Intermodal Safe Container Act of 1992 is set forth on the face of this bill of lading. The shipper name herein is the tendering party.

Haz	Container No.	Container Type	Total Quantity	Unit Wt/Vol	Description of Materials, Special Marks, and Exceptions
No	1	TT	43,000	P	RQ, Corrosive liquids, n.o.s. (weak caustic solution), 8, UN1760, PG II
No					""delivery of "Weak Caustic Solution" to the Green tank # 3248SDL""

Shipper : CES Environmental Services - Port Arthur
Per: Suzi Mock **Signature:** Suzi Mock **Date :** 4/29/09

Carrier CES Environmental (Port Arthur)
Per : Joe Dominguez **Signature :** Joe Dominguez **Date :** 04 29 09

Receiving Facility : Boise Cascade
Per : Richard Turner **Signature :** [illegible] **Date :** 4-29-09

White (Generator Return Copy) Yellow (Transporter Copy) Pink (Receiving Facility Copy) Golden Rod (Generator 1st Copy)

CES Environmental Services, Inc.

Bill Of Lading # : 85096

Folder ID :	White Liquor Caustic

Original – Shipper Provided Short Form Straight Bill of Lading – Not Negotiable – Domestic

SHIPPED FROM :
CES Environmental Services - Port Arthur
2420 S. Gulfway Drive
Port Arthur , TX 77640

WHITE LIQUOR WHITE LIQUOR WHITE LIQUOR
11a) HOU-2375
11b)
11c)
11c)

The property described below, in apparent good order, except as noted (content and condition of packages unknown), marked, consigned, and destined as indicated below, which said carrier (the word carrier being understood throughout this as meaning any person or corporation authorized to be in possession of the property under the contract) agrees to carry to its usual place of delivery at said destination, if on its route, otherwise to deliver to another carrier on the route to said destination. This Bill of Lading is a receipt for goods; it is not of itself a contract of carriage. It is mutually agreed, as to each carrier of all or as to any said over all or any portion of said route to destination, and as to each party at any time interested in all or any of said property, that every service to be performed hereunder shall be subject to all the terms and conditions contained in the applicable contract between shipper and carrier or intermediary.

For payment: Charges to be billed to Shipper or the "Billed to" party are set forth in the governing contract with Shipper. No charges other than those contained therein may be billed to Shipper or the "Billed to" party without prior written consent of Shipper. The extra copy of this Bill of Lading, furnished at the time of shipment, must be attached to the freight bill submitted to Shipper or the "Billed to" party and sent to:

11:30 AM

CONSIGNED TO :
Boise Cascade
4200 Hwy 190 West
DeRidder , LA 70634

6:30 AM
8:30 AM

CARRIER :
CES Environmental (Port Arthur)
2420 Gulfway Dr.
Port Arthur , TX 77640

11:45 AM
12:30 PM

This is to certify that the product stated below are properly classified, described, packaged, marked and labeled and is in proper condition for transportation according to the applicable regulations of the Department of Transportation. If this shipment moves between to ports by a carrier by water, the law requires that the Bill of Lading shall state whether it is "carrier's or shipper's weight."

9:00 AM

Intermodal Certificate: All information required by Federal Highway Administration regulations at 49 CFR 390.54© implementing the Intermodal Safe Container Act of 1992 is set forth on the face of this bill of lading. The shipper name herein is the tendering party.

Haz	Container No.	Container Type	Total Quantity	Unit Wt/Vol	Description of Materials, Special Marks, and Exceptions
No	1	TT	38800	P	RQ, Corrosive liquids, n.o.s. (WHITE LIQUOR CAUSTIC), 8, UN1760, PG II
					10PB13

Shipper : CES Environmental Services - Port Arthur
Per : Suz Moll **Signature :** Suz Moll **Date :** 4/29/09

Carrier CES Environmental (Port Arthur)
Per : Judd Frim **Signature :** [signature] **Date :** 4-29-09

Receiving Facility : Boise Cascade
Per : _____ **Signature :** [signature] **Date :** 4/29/09

White (Generator Return Copy) Yellow (Transporter Copy) Pink (Receiving Facility Copy) Golden Rod (Generator 1st Copy)

CES Environmental Services, Inc.

Bill Of Lading # : 85101

Folder ID :	Citgo Refinery (Citgo - Lake Charles, LA) Naphthenic Caustic Recycling

Original – Shipper Provided Short Form Straight Bill of Lading – Not Negotiable – Domestic

SHIPPED FROM :
Citgo Refinery
4401 LA Hwy 108
Lake Charles , LA 70665
(337) 708-6344

PO #4504854067
11a) PA-2641
11b)
11c)
11c)

The property described below, in apparent good order, except as noted (content and condition of packages unknown), marked, consigned, and destined as indicated below, which said carrier (the word carrier being understood throughout this as meaning any person or corporation authorized to be in possession of the property under the contract) agrees to carry to its unusual place of delivery at said destination, if on its route, otherwise to deliver to another carrier on the route to said destination. This Bill of Lading is a receipt for goods; it is not of itself a contract of carriage. It is mutually agreed, as to each carrier of all or as to any said over all or any portion of said route to destination, and as to each party at any time interested in all or any of said property, that every service to be performed hereunder shall be subject to all the terms and conditions contained in the applicable contract between shipper and carrier or intermediary.

For payment: Charges to be billed to Shipper or the "Billed to" party are set forth in the governing contract with Shipper. No charges other than those contained therein may be billed to Shipper or the "Billed to" party without prior written consent of Shipper. The extra copy of this Bill of Lading, furnished at the time of shipment, must be attached to the freight bill submitted to Shipper or the "Billed to" party and sent to:

CONSIGNED TO : 1:00 pm
CES Environmental (Port Arthur) 2:15 pm
2420 Gulfway Dr.
Port Arthur , TX 77640 3:15 pm

CARRIER : 7:00 pm
CES Environmental (Port Arthur)
2420 Gulfway Dr.
Port Arthur , TX 77640

This is to certify that the product stated below are properly classified, described, packaged, marked and labeled and is in proper condition for transportation according to the applicable regulations of the Department of Transportation. If this Shipment moves between to ports by a carrier by water, the law requires that the Bill of Lading shall state whether it is "carrier's or shipper's weight."

4:30 pm

Intermodal Certificate: All information required by Federal Highway Administration regulations at 49 CFR 390.5(d) implementing the Intermodal Safe Container Act of 1992 is set forth on the face of this bill of lading. The shipper name herein is the tendering party.

Haz	Container No.	Container Type	Total Quantity	Unit Wt/Vol	Description of Materials, Special Marks, and Exceptions
Yes	1	TT	37420 P		RQ< Corrosive liquids, n.o.s. (naphthenic caustic), 8, UN1760, PGII
					107199

Shipper : Citgo Refinery

Per : _____ **Signature :** _____ **Date :** _____

Carrier CES Environmental (Port Arthur)

Per : Juro Flores **Signature :** _____ **Date :** 4-28-09

Receiving Facility : CES Environmental (Port Arthur)

Per : Jason Radda **Signature :** _____ **Date :** 4-28-09

White (Generator Return Copy) Yellow (Transporter Copy) Pink (Receiving Facility Copy) Golden Rod (Generator 1st Copy)

CES Environmental Services, Inc.

Bill Of Lading # : 85103

Folder ID :	Citgo Refinery (Citgo - Lake Charles, LA) Naphthenic Caustic Recycling

Original – Shipper Provided Short Form Straight Bill of Lading – Not Negotiable – Domestic

SHIPPED FROM :
Citgo Refinery
4401 LA Hwy 108
Lake Charles , LA 70665
(337) 708-6344

PO #4504854067
11a) PA-2641
11b)
11c)
11c)

The property described below, in apparent good order, except as noted (content and condition of packages unknown), marked, consigned, and destined as indicated below, which said carrier (the word carrier being understood throughout this as meaning any person or corporation authorized to be in possession of the property under the contract) agrees to carry to its unusual place of delivery at said destination, if on its route, otherwise to deliver to another carrier on the route to said destination. This Bill of Lading is a receipt for goods; it is not of itself a contract of carriage. It is mutually agreed, as to each carrier of all or as to any said over all or any portion of said route to destination, and as to each party at any time interested in all or any of said property, that every service to be performed hereunder shall be subject to all the terms and conditions contained in the applicable contract between shipper and carrier or intermediary.

For payment: Charges to be billed to Shipper or the "Billed to" party are set forth in the governing contract with Shipper. No charges other than those contained therein may be billed to Shipper or the "Billed to" party without prior written consent of Shipper. The extra copy of this Bill of Lading, furnished at the time of shipment, must be attached to the freight bill submitted to Shipper or the "Billed to" party and sent to:

CONSIGNED TO :
CES Environmental (Port Arthur)
2420 Gulfway Dr.
Port Arthur , TX 77640

CARRIER :
CES Environmental (Port Arthur)
2420 Gulfway Dr.
Port Arthur , TX 77640

This is to certify that the product stated below are properly classified, described, packaged, marked and labeled and is in proper condition for transportation according to the applicable regulations of the Department of Transportation. If this Shipment moves between to ports by a carrier by water, the law requires that the Bill of Lading shall state whether it is "carrier's or shipper's weight."

Intermodal Certificate: All information required by Federal Highway Administration regulations at 49 CFR 390.5(B) implementing the intermodal Safe Container Act of 1992 is set forth on the face of this bill of lading. The shipper name herein is the tendering party.

Haz	Container No.	Container Type	Total Quantity	Unit Wt/Vol	Description of Materials, Special Marks, and Exceptions
Yes	1	TT	41180	P	RQ< Corrosive liquids, n.o.s. (naphthenic caustic), 8, UN1760, PGII

Shipper : Citgo Refinery
Per : _____ **Signature :** [signature] (FULL LOAD) **Date :** 4.30.09

Carrier CES Environmental (Port Arthur)
Per : JUAN FRIAS **Signature :** [signature] **Date :** 4-30-09

Receiving Facility : CES Environmental (Port Arthur)
Per : _____ **Signature :** _____ **Date :** _____

White (Generator Return Copy) Yellow (Transporter Copy) Pink (Receiving Facility Copy) Golden Rod (Generator 1st Copy)

CES Environmental Services, Inc.

Bill Of Lading # : 85093

Folder ID :	White Liquor Caustic

Original – Shipper Provided Short Form Straight Bill of Lading – Not Negotiable – Domestic

SHIPPED FROM :
CES Environmental Services - Port Arthur
2420 S. Gulfway Drive
Port Arthur , TX 77640

WHITE LIQUOR WHITE LIQUOR WHITE LIQUOR
11a) HOU-2375
11b) 85093
11c)
11c)

The property described below, in apparent good order, except as noted (content and condition of packages unknown), marked, consigned, and destined as indicated below, which said carrier (the word carrier being understood throughout this as meaning any person or corporation authorized to be in possession of the property under the contract) agrees to carry to its usual place of delivery at said destination, if on its route, otherwise to deliver to another carrier on the route to said destination. *This Bill of Lading is a receipt for goods; it is not of itself a contract of carriage. It is mutually agreed, as to each carrier of all or as to any said over all or any portion of said route to destination, and as to each party at any time interested in all or any of said property, that every service to be performed hereunder shall be subject to all the terms and conditions contained in the applicable contract* between shipper and carrier or intermediary.

For payment: Charges to be billed to Shipper or the "Billed to" party are set forth in the governing contract with Shipper. No charges other than those contained therein may be billed to Shipper or the "Billed to" party without prior written consent of Shipper. The extra copy of this Bill of Lading, furnished at the time of shipment, must be attached to the freight bill submitted to Shipper or the "Billed to" party and sent to:

CONSIGNED TO :
Boise Cascade
4200 Hwy 190 West
DeRidder , LA 70634

CARRIER :
CES Environmental (Port Arthur)
2420 Gulfway Dr.
Port Arthur , TX 77640

This is to certify that the product stated below are properly classified, described, packaged, marked and labeled and is in proper condition for transportation according to the applicable regulations of the Department of Transportation. If this Shipment moves between to ports by a carrier by water, the law requires that the Bill of Lading shall state whether it is "carrier's or shipper's weight."

Intermodal Certificate: All information required by Federal Highway Administration regulations at 49 CFR 390.5465 implementing the Intermodal Safe Container Act of 1992 is set forth on the face of this bill of lading. The shipper name herein is the tendering party.

Haz	Container No.	Container Type	Total Quantity	Unit Wt/Vol	Description of Materials, Special Marks, and Exceptions
No	1	TT	44,820	P	RQ, Corrosive liquids, n.o.s. (WHITE LIQUOR CAUSTIC), 8, UN1760, PG II

4 28 09

Shipper : CES Environmental Services - Port Arthur
Per : Suzy Mock **Signature :** Suzy Mock **Date :** 4/28/09

Carrier CES Environmental (Port Arthur)
Per : LeRoy Brown **Signature :** LeRoy Brown **Date :** 4-28-09

Receiving Facility : Boise Cascade
Per : **Signature :** **Date :** 4 28 09

White (Generator Return Copy) Yellow (Transporter Copy) Pink (Receiving Facility Copy) Golden Rod (Generator 1st Copy)

CES Environmental Services, Inc.

Bill Of Lading # : 85076

Folder ID :	Spent Sulfidic Caustic

Original – Shipper Provided Short Form Straight Bill of Lading – Not Negotiable – Domestic

SHIPPED FROM :
CES Environmental Services - Port Arthur
2420 S. Gulfway Drive
Port Arthur , TX 77640

11a) HOU-2375
11b)
11c)
11c)

The property described below, in apparent good order, except as noted (content and condition of packages unknown), marked, consigned, and destined as indicated below, which said carrier (the word carrier being understood throughout this as meaning any person or corporation authorized to be in possession of the property under the contract) agrees to carry to its unusual place of delivery at said destination, if on its route, otherwise to deliver to another carrier on the route to said destination. This Bill of Lading is a receipt for goods; it is not of itself a contract of carriage. It is mutually agreed, as to each carrier of all or as to any said over all or any portion of said route to destination, and as to each party at any time interested in all or any of said property, that every service to be performed hereunder shall be subject to all the terms and conditions contained in the applicable contract between shipper and carrier or intermediary.

For payment: Charges to be billed to Shipper or the "Billed to" party are set forth in the governing contract with Shipper. No charges other than those contained therein may be billed to Shipper or the "Billed to" party without prior written consent of Shipper. The extra copy of this Bill of Lading, furnished at the time of shipment, must be attached to the freight bill submitted to Shipper or the "Billed to" party and sent to:

CONSIGNED TO :
Boise Cascade
4200 Hwy 190 West
DeRidder , LA 70634

CARRIER :
CES Environmental (Port Arthur)
2420 Gulfway Dr.
Port Arthur , TX 77640

This is to certify that the product stated below are properly classified, described, packaged, marked and labeled and is in proper condition for transportation according to the applicable regulations of the Department of Transportation. If this Shipment moves between to ports by a carrier by water, the law requires that the Bill of Lading shall state whether it is "carrier's or shipper's weight."

Intermodal Certificate: All information required by Federal Highway Administration regulations at 49 CFR 390.54© implementing the Intermodal Safe Container Act of 1992 is set forth on the face of this bill of lading. The shipper name herein is the tendering party.

Haz	Container No.	Container Type	Total Quantity	Unit Wt/Vol	Description of Materials, Special Marks, and Exceptions
No	1	TT	05,380	P	RQ, Corrosive liquids, n.o.s. (weak caustic solution), 8, UN1760, PG II
No					**delivery of "Weak Caustic Solution" to the Green tank # 3248SDL**

Shipper : CES Environmental Services - Port Arthur
Per : BO Lumbelard **Signature :** Bo **Date :** 4-28-09

Carrier CES Environmental (Port Arthur)
Per : Leroy Brown **Signature :** Leroy Brown **Date :** 4-28-09

Receiving Facility : Boise Cascade
Per : Richard Francis **Signature :** [illegible] **Date :** 4-28-09

White (Generator Return Copy) Yellow (Transporter Copy) Pink (Receiving Facility Copy) Golden Rod (Generator 1st Copy)

CES Environmental Services, Inc.

Bill Of Lading # : 85094

Folder ID :	White Liquor Caustic

Original – Shipper Provided Short Form Straight Bill of Lading – Not Negotiable – Domestic

SHIPPED FROM :
CES Environmental Services - Port Arthur
2420 S. Gulfway Drive
Port Arthur , TX 77640

WHITE LIQUOR WHITE LIQUOR WHITE LIQUOR
11a) HOU-2375
11b)
11c)
11c)

The property described below, in apparent good order, except as noted (content and condition of packages unknown), marked, consigned, and destined as indicated below, which said carrier (the word carrier being understood throughout this as meaning any person or corporation authorized to be in possession of the property under the contract) agrees to carry to its usual place of delivery at said destination, if on its route, otherwise to deliver to another carrier on the route to said destination. *This Bill of Lading is a receipt for goods, it is not of itself a contract of carriage. It is mutually agreed, as to each carrier of all or as to any said over all or any portion of said route to destination, and as to each party at any time interested in all or any of said property, that every service to be performed hereunder shall be subject to all the terms and conditions contained in the applicable contract* between shipper and carrier or intermediary.

For payment: Charges to be billed to Shipper or the "Billed to" party are set forth in the governing contract with Shipper. No charges other than those contained therein may be billed to Shipper or the "Billed to" party without prior written consent of Shipper. The extra copy of this Bill of Lading, furnished at the time of shipment, must be attached to the freight bill submitted to Shipper or the "Billed to" party and sent to:

CONSIGNED TO :
Boise Cascade
4200 Hwy 190 West
DeRidder , LA 70634

CARRIER :
CES Environmental (Port Arthur)
2420 Gulfway Dr.
Port Arthur , TX 77640

This is to certify that the product stated below are properly classified, described, packaged, marked and labeled and is in proper condition for transportation according to the applicable regulations of the Department of Transportation. If this Shipment moves between to ports by a carrier by water, the law requires that the Bill of Lading shall state whether it is "carrier's or shipper's weight."

Intermodal Certificate: All information required by Federal Highway Administration regulations at 49 CFR 390.54© implementing the Intermodal Safe Container Act of 1992 is set forth on the face of this bill of lading. The shipper name herein is the tendering party.

Haz	Container No.	Container Type	Total Quantity	Unit Wt/Vol	Description of Materials, Special Marks, and Exceptions
No	1	TT	46220	P	RQ, Corrosive liquids, n.o.s. (WHITE LIQUOR CAUSTIC), 8, UN1760, PG II

Shipper : CES Environmental Services - Port Arthur
Per : [illegible] **Signature :** [illegible] **Date :** 4-28-09

Carrier CES Environmental (Port Arthur)
Per : Juan Flores **Signature :** [illegible] **Date :** 4.28.09

Receiving Facility : Boise Cascade
Per : [illegible] **Signature :** **Date :** 4/28/09

White (Generator Return Copy) Yellow (Transporter Copy) Pink (Receiving Facility Copy) Golden Rod (Generator 1st Copy)

CES Environmental Services, Inc.

Bill Of Lading # : 85074

Folder ID :	Spent Sulfidic Caustic

Original – Shipper Provided Short Form Straight Bill of Lading – Not Negotiable – Domestic

SHIPPED FROM :
CES Environmental Services - Port Arthur
2420 S. Gulfway Drive
Port Arthur , TX 77640

11a) HOU-2375
11b)
11c)
11c)

The property described below, in apparent good order, except as noted (content and condition of packages unknown), marked, consigned, and destined as indicated below, which said carrier (the word carrier being understood throughout this as meaning any person or corporation authorized to be in possession of the property under the contract) agrees to carry to its usual place of delivery at said destination, if on its route, otherwise to deliver to another carrier on the route to said destination. *This Bill of Lading is a receipt for goods, it is not of itself a contract of carriage. It is mutually agreed, as to each carrier of all or as to any said over all or any portion of said route to destination, and as to each party at any time interested in all or any of said property, that every service to be performed hereunder shall be subject to all the terms and conditions contained in the applicable contract* between shipper and carrier or intermediary.

For payment: Charges to be billed to Shipper or the "Billed to" party are set forth in the governing contract with Shipper. No charges other than those contained therein may be billed to Shipper or the "Billed to" party without prior written consent of Shipper. The extra copy of this Bill of Lading, furnished at the time of shipment, must be attached to the freight bill submitted to Shipper or the "Billed to" party and sent to:

CONSIGNED TO :
Boise Cascade
4200 Hwy 190 West
DeRidder , LA 70634

CARRIER :
CES Environmental (Port Arthur)
2420 Gulfway Dr.
Port Arthur , TX 77640

This is to certify that the product stated below are properly classified, described, packaged, marked and labeled and is in proper condition for transportation according to the applicable regulations of the Department of Transportation. If this Shipment moves between to ports by a carrier by water, the law requires that the Bill of Lading shall state whether it is "carrier's or shipper's weight."

Intermodal Certificate: All information required by Federal Highway Administration regulations at 49 CFR 390.5⁴⁰ implementing the Intermodal Safe Container Act of 1992 is set forth on the face of this bill of lading. The shipper name herein is the tendering party.

Haz	Container No.	Container Type	Total Quantity	Unit Wt/Vol	Description of Materials, Special Marks, and Exceptions
No	1	TT	39,440	P	RQ, Corrosive liquids, n.o.s. (weak caustic solution), 8, UN1760, PG II
No					""delivery of "Weak Caustic Solution" to the Green tank #3248SDL""

Shipper : CES Environmental Services - Port Arthur
Per : Suzi Mock **Signature :** Suzi Mock **Date :** 4/28/09

Carrier CES Environmental (Port Arthur)
Per : Joe Domingez **Signature :** Joe Domingez **Date :** 04 28 09

Receiving Facility : Boise Cascade
Per : Richard Swanner **Signature :** [illegible] **Date :** 4-28-09

White (Generator Return Copy) Yellow (Transporter Copy) Pink (Receiving Facility Copy) Golden Rod (Generator 1st Copy)

CES Environmental Services, Inc.

Bill Of Lading # : 85111

Folder ID :	CES Environmental Services Sale of Sulfidic Caustic

Original – Shipper Provided Short Form Straight Bill of Lading – Not Negotiable – Domestic

SHIPPED FROM :
CES Environmental Services - Port Arthur
2420 S. Gulfway Drive
Port Arthur , TX 77640
(713) 676-1460

Release #
11a) PA-2375
11b)
11c)
11c)

The property described below, in apparent good order, except as noted (content and condition of packages unknown), marked, consigned, and destined as indicated below, which said carrier (the word carrier being understood throughout this as meaning any person or corporation authorized to be in possession of the property under the contract) agrees to carry to its usual place of delivery at said destination, if on its route, otherwise to deliver to another carrier on the route to said destination. This Bill of Lading is a receipt for goods; it is not of itself a contract of carriage. It is mutually agreed, as to each carrier of all or as to any said over all or any portion of said route to destination, and as to each party at any time interested in all or any of said property, that every service to be performed hereunder shall be subject to all the terms and conditions contained in the applicable contract between shipper and carrier or intermediary.

For payment: Charges to be billed to Shipper or the "Billed to" party are set forth in the governing contract with Shipper. No charges other than those contained therein may be billed to Shipper or the "Billed to" party without prior written consent of Shipper. The extra copy of this Bill of Lading, furnished at the time of shipment, must be attached to the freight bill submitted to Shipper or the "Billed to" party and sent to:

CONSIGNED TO :
International Paper
300 Williams Lake Road
Pineville , LA 71360

CARRIER :
CES Environmental Services, Inc.
4904 Griggs Rd.
Houston , TX 77021

This is to certify that the product stated below are properly classified, described, packaged, marked and labeled and is in proper condition for transportation according to the applicable regulations of the Department of Transportation. If this Shipment moves between to ports by a carrier by water, the law requires that the Bill of Lading shall state whether it is "carrier's or shipper's weight."

Intermodal Certificate: All information required by Federal Highway Administration regulations at 49 CFR 390.5409 implementing the Intermodal Safe Container Act of 1992 is set forth on the face of this bill of lading. The shipper name herein is the tendering party.

Haz	Container No.	Container Type	Total Quantity	Unit Wt/Vol	Description of Materials, Special Marks, and Exceptions
No	1	TT	46420	P	RQ, Corrosive liquids, n.o.s. (containing sodium hydroxide), 8, UN1760, PG II
No					"SOCHEM FREE SULFIDIC CAUSTIC"

Shipper : CES Environmental Services - Port Arthur

Per : _____ **Signature :** _____ **Date :** 4-27-09

Carrier CES Environmental Services, Inc.

Per : R. Whitehead **Signature :** _____ **Date :** 4-27-09

Receiving Facility : International Paper

Per : _____ **Signature :** _____ **Date :** _____

White (Generator Return Copy) Yellow (Transporter Copy) Pink (Receiving Facility Copy) Golden Rod (Generator 1st Copy)

CES JOB# 84984

BILL OF LADING – SHORT FORM – NOT NEGOTIABLE

SHIP FROM	Bill of Lading Number:
Plymouth Extruded shapes 201 Commerce Court Hopkinsville, KY 42240 888-741-6425 SID No.:	PES 001 Triad Transport 285419
SHIP TO	**Carrier Name:** Triad Transport, Inc. Trailer number: 138-2710 Serial number(s): —
CES Environmental 2420 S. Gulfway Dr Port Arthur, TX 77641 (713) 676-1460 ext. 155 CID No.:	
THIRD PARTY FREIGHT CHARGES BILL TO	**SCAC:** Pro Number:
Special Instructions: **EMERGENCY CONTACT-888-741-6425** **Approval Number 3115**	**Freight Charge Terms** (Freight charges are prepaid unless marked otherwise): Prepaid ☐ Collect ☐ 3rd Party ☒ ☐ Master bill of lading with attached underlying bills of lading.

CUSTOMER ORDER INFORMATION

Customer Order No.	# of Packages	Weight	Pallet/Slip (circle one)		Additional Shipper Information
			Y	N	
			Y	N	
			Y	N	
			Y	N	
Grand Total					

CARRIER INFORMATION

Handling Unit		Package					LTL Only	
Qty	Type	Qty	Type	Weight	HM (X)	**Commodity Description** Commodities requiring special or additional care or attention in handling or stowing must be so marked and packaged as to ensure safe transportation with ordinary care. See Section 2(e) of NMFC item 360	NMFC No.	Class
		01	TT	1800 gals	X	RQ, SODIUM HYDROXIDE SOLUTION, 8, UN1824, PGII (RQ-1,000 LBS)		

Where the rate is dependent on value, shippers are required to state specifically in writing the agreed or declared value of the property as follows: "The agreed or declared value of the property is specifically stated by the shipper to be not exceeding _____ per _____.

COD Amount: $ _____

Fee terms: Collect ☐ Prepaid ☐ Customer check acceptable ☐

Note: Liability limitation for loss or damage in this shipment may be applicable. See 49 USC § 14706(c)(1)(A) and (B).

Received, subject to individually determined rates or contracts that have been agreed upon in writing between the carrier and shipper, if applicable, otherwise to the rates, classifications, and rules that have been established by the carrier and are available to the shipper, on request, and to all applicable state and federal regulations.

The carrier shall not make delivery of this shipment without payment of charges and all other lawful fees.

Shipper Signature Keith L Daly

Shipper Signature/Date	Trailer Loaded:	Freight Counted:	Carrier Signature/Pickup Date
Keith L Daly 4-27-09 This is to certify that the above named materials are properly classified, packaged, marked, and labeled, and are in proper condition for transportation according to the applicable regulations of the DOT.	☐ By shipper ☒ By driver	☒ By shipper ☐ By driver/pallets said to contain ☒ By driver/pieces	4-27-09 Carrier acknowledges receipt of packages and required placards. Carrier certifies emergency response information was made available and/or carrier has the DOT emergency response guidebook or equivalent documentation in the vehicle. Property described above is received in good order, except as noted.

CES Environmental Services, Inc.

Bill Of Lading # : 85083

Folder ID :	Spent Sulfidic Caustic

Original – Shipper Provided Short Form Straight Bill of Lading – Not Negotiable – Domestic

SHIPPED FROM :
CES Environmental Services - Port Arthur
2420 S. Gulfway Drive
Port Arthur , TX 77640

11a) HOU-2375 85083
11b)
11c)
11c)

The property described below, in apparent good order, except as noted (content and condition of packages unknown), marked, consigned, and destined as indicated below, which said carrier (the word carrier being understood throughout this as meaning any person or corporation authorized to be in possession of the property under the contract) agrees to carry to its usual place of delivery at said destination, if on its route, otherwise to deliver to another carrier on the route to said destination. This Bill of Lading is a receipt for goods; it is not of itself a contract of carriage. It is mutually agreed, as to each carrier of all or as to any said over all or any portion of said route to destination, and as to each party at any time interested in all or any of said property, that every service to be performed hereunder shall be subject to all the terms and conditions contained in the applicable contract between shipper and carrier or intermediary.

For payment: Charges to be billed to Shipper or the "Billed to" party are set forth in the governing contract with Shipper. No charges other than those contained therein may be billed to Shipper or the "Billed to" party without prior written consent of Shipper. The extra copy of this Bill of Lading, furnished at the time of shipment, must be attached to the freight bill submitted to Shipper or the "Billed to" party and sent to:

CONSIGNED TO :
Boise Cascade
4200 Hwy 190 West
DeRidder , LA 70634

6:30
7:30

CARRIER :
CES Environmental (Port Arthur)
2420 Gulfway Dr.
Port Arthur , TX 77640

10:00

This is to certify that the product stated below are properly classified, described, packaged, marked and labeled and is in proper condition for transportation according to the applicable regulations of the Department of Transportation. If this shipment moves between to ports by a carrier by water, the law requires that the Bill of Lading shall state whether it is "carrier's or shipper's weight."

Intermodal Certificate: All information required by Federal Highway Administration regulations at 49 CFR 390.5465 implementing the Intermodal Safe Container Act of 1992 is set forth on the face of this bill of lading. The shipper name herein is the tendering party.

Haz	Container No.	Container Type	Total Quantity	Unit Wt/Vol	Description of Materials, Special Marks, and Exceptions
No	1	TT	50,320	P	RQ, Corrosive liquids, n.o.s. (weak caustic solution), 8, UN1760, PG II
No					**"delivery of "Weak Caustic Solution" to the Green tank # 3246SDL"**

Shipper : CES Environmental Services - Port Arthur
Per : [signature] **Signature :** [signature] **Date :** 4-30-09

Carrier CES Environmental (Port Arthur)
Per : LeRoy Brown **Signature :** [signature] **Date :** 4-30-09

Receiving Facility : Boise Cascade
Per : S. Slayden **Signature :** S. Slayden **Date :** 4-30-09

White (Generator Return Copy) Yellow (Transporter Copy) Pink (Receiving Facility Copy) Golden Rod (Generator 1st Copy)

CES Environmental Services, Inc.

Bill Of Lading # : 85114

Folder ID :	CES Environmental Services Sale of Sulfidic Caustic

Original – Shipper Provided Short Form Straight Bill of Lading – Not Negotiable – Domestic

SHIPPED FROM :
CES Environmental Services - Port Arthur
2420 S. Gulfway Drive
Port Arthur , TX 77640
(713) 676-1460

Release #
11a) PA-2375
11b)
11c)
11c)

The property described below, in apparent good order, except as noted (content and condition of packages unknown), marked, consigned, and destined as indicated below, which said carrier (the word carrier being understood throughout this as meaning any person or corporation authorized to be in possession of the property under the contract) agrees to carry to its unusual place of delivery at said destination, if on its route, otherwise to deliver to another carrier on the route to said destination. This Bill of Lading is a receipt for goods; it is not of itself a contract of carriage. It is mutually agreed, as to each carrier of all or as to any said over all or any portion of said route to destination, and as to each party at any time interested in all or any of said property, that every service to be performed hereunder shall be subject to all the terms and conditions contained in the applicable contract between shipper and carrier or intermediary.

For payment: Charges to be billed to Shipper or the "Billed to" party are set forth in the governing contract with Shipper. No charges other than those contained therein may be billed to Shipper or the "Billed to" party without prior written consent of Shipper. The extra copy of this Bill of Lading, furnished at the time of shipment, must be attached to the freight bill submitted to Shipper or the "Billed to" party and sent to:

CONSIGNED TO :
International Paper
300 Williams Lake Road
Pineville , LA 71360

CARRIER :
CES Environmental Services, Inc.
4904 Griggs Rd.
Houston , TX 77021

This is to certify that the product stated below are properly classified, described, packaged, marked and labeled and is in proper condition for transportation according to the applicable regulations of the Department of Transportation. If this Shipment moves between to ports by a carrier by water, the law requires that the Bill of Lading shall state whether it is "carrier's or shipper's weight."

Intermodal Certificate: All information required by Federal Highway Administration regulations at 49 CFR 390.54© implementing the Intermodal Safe Container Act of 1992 is set forth on the face of this bill of lading. The shipper name herein is the tendering party.

Haz	Container No.	Container Type	Total Quantity	Unit Wt/Vol	Description of Materials, Special Marks, and Exceptions
No	1	TT SLP88		P	RQ, Corrosive liquids, n.o.s. (containing sodium hydroxide), 8, UN1760, PG II
No					"SOCHEM FREE SULFIDIC CAUSTIC"

Shipper : CES Environmental Services - Port Arthur
Per : Bo [illegible] **Signature :** [illegible] **Date :** 4-30-09

Carrier CES Environmental Services, Inc.
Per : Kevin Wilson **Signature :** [illegible] **Date :** 4 30 09

Receiving Facility : International Paper
Per : _____ **Signature :** [illegible] **Date :** _____

White (Generator Return Copy) Yellow (Transporter Copy) Pink (Receiving Facility Copy) Golden Rod (Generator 1st Copy)

CES Environmental Services, Inc.

Bill Of Lading # : 85098

Folder ID :	White Liquor Caustic

Original – Shipper Provided Short Form Straight Bill of Lading – Not Negotiable – Domestic

SHIPPED FROM :
CES Environmental Services - Port Arthur
2420 S. Gulfway Drive
Port Arthur , TX 77640

WHITE LIQUOR WHITE LIQUOR WHITE LIQUOR
11a) HOU-2375
11b)
11c)
11c)

The property described below, in apparent good order, except as noted (content and condition of packages unknown), marked, consigned, and destined as indicated below, which said carrier (the word carrier being understood throughout this as meaning any person or corporation authorized to be in possession of the property under the contract) agrees to carry to its usual place of delivery at said destination, if on its route, otherwise to deliver to another carrier on the route to said destination. *This Bill of Lading is a receipt for goods; it is not of itself a contract of carriage. It is mutually agreed, as to each carrier of all or as to any said over all or any portion of said route to destination, and as to each party at any time interested in all or any of said property, that every service to be performed hereunder shall be subject to all the terms and conditions contained in the applicable contract* between shipper and carrier or intermediary.

For payment: Charges to be billed to Shipper or the "Billed to" party are set forth in the governing contract with Shipper. No charges other than those contained therein may be billed to Shipper or the "Billed to" party without prior written consent of Shipper. The extra copy of this Bill of Lading, furnished at the time of shipment, must be attached to the freight bill submitted to Shipper or the "Billed to" party and sent to:

CONSIGNED TO :
Boise Cascade
4200 Hwy 190 West
DeRidder , LA 70634

CARRIER :
CES Environmental (Port Arthur)
2420 Gulfway Dr.
Port Arthur , TX 77640

This is to certify that the product stated below are properly classified, described, packaged, marked and labeled and is in proper condition for transportation according to the applicable regulations of the Department of Transportation. If this Shipment moves between to ports by a carrier by water, the law requires that the Bill of Lading shall state whether it is "carrier's or shipper's weight."

Intermodal Certificate: All information required by Federal Highway Administration regulations at 49 CFR 390.5409 implementing the Intermodal Safe Container Act of 1992 is set forth on the face of this bill of lading. The shipper name herein is the tendering party.

Haz	Container No.	Container Type	Total Quantity	Unit Wt/Vol	Description of Materials, Special Marks, and Exceptions
No	1	TT	43040	P	RQ, Corrosive liquids, n.o.s. (WHITE LIQUOR CAUSTIC), 8, UN1760, PG II

Shipper : CES Environmental Services - Port Arthur
Per : Bo Cumberland **Signature :** Bo **Date :** 4-30-09

Carrier CES Environmental (Port Arthur)
Per : Sonio Frias **Signature :** [illegible] **Date :** 4-30-09

Receiving Facility : Boise Cascade
Per : _____ **Signature :** [illegible] **Date :** 4 30 09

White (Generator Return Copy) Yellow (Transporter Copy) Pink (Receiving Facility Copy) Golden Rod (Generator 1st Copy)

CES Environmental Services, Inc.

Bill Of Lading # : 85116

Folder ID :	CES Environmental Services Sale of Sulfidic Caustic

Original – Shipper Provided Short Form Straight Bill of Lading – Not Negotiable – Domestic

SHIPPED FROM :
CES Environmental Services - Port Arthur
2420 S. Gulfway Drive
Port Arthur , TX 77640
(713) 676-1460

Release #
11a) PA-2375
11b)
11c)
11c)

The property described below, in apparent good order, except as noted (content and condition of packages unknown), marked, consigned, and destined as indicated below, which said carrier (the word carrier being understood throughout this as meaning any person or corporation authorized to be in possession of the property under the contract) agrees to carry to its usual place of delivery at said destination, if on its route, otherwise to deliver to another carrier on the route to said destination. This Bill of Lading is a receipt for goods; it is not of itself a contract of carriage. It is mutually agreed, as to each carrier of all or as to any said over all or any portion of said route to destination, and as to each party at any time interested in all or any of said property, that every service to be performed hereunder shall be subject to all the terms and conditions contained in the applicable contract between shipper and carrier or intermediary.

For payment: Charges to be billed to Shipper or the "Billed to" party are set forth in the governing contract with Shipper. No charges other than those contained therein may be billed to Shipper or the "Billed to" party without prior written consent of Shipper. The extra copy of this Bill of Lading, furnished at the time of shipment, must be attached to the freight bill submitted to Shipper or the "Billed to" party and sent to:

CONSIGNED TO :
International Paper
300 Williams Lake Road
Pineville , LA 71360

CARRIER :
CES Environmental Services, Inc.
4904 Griggs Rd.
Houston , TX 77021

This is to certify that the product stated below are properly classified, described, packaged, marked and labeled and is in proper condition for transportation according to the applicable regulations of the Department of Transportation. If this Shipment moves between to ports by a carrier by water, the law requires that the Bill of Lading shall state whether it is "carrier's or shipper's weight."

Intermodal Certificate: All information required by Federal Highway Administration regulations at 49 CFR 390.5(d) implementing the Intermodal Safe Container Act of 1982 is set forth on the face of this bill of lading. The shipper name herein is the tendering party.

Haz	Container No.	Container Type	Total Quantity	Unit Wt/Vol	Description of Materials, Special Marks, and Exceptions
No	1	TT	76,26 P		RQ, Corrosive liquids, n.o.s. (containing sodium hydroxide), 8, UN1760, PG II
No			38,150		"SOCHEM FREE SULFIDIC CAUSTIC" 3509
					38424
					372

Shipper : CES Environmental Services - Port Arthur
Per : Bo **Signature :** Bo **Date :** 4-30-09

Carrier CES Environmental Services, Inc.
Per : Kevin Wilson **Signature :** Kevin Wilson **Date :** 5-1-09

Receiving Facility : International Paper
Per : _____ **Signature :** _____ **Date :** 5-1-09

White (Generator Return Copy) Yellow (Transporter Copy) Pink (Receiving Facility Copy) Golden Rod (Generator 1st Copy)

CES Environmental Services, Inc.

Bill Of Lading # : 85117

Folder ID :	CES Environmental Services Sale of Sulfidic Caustic

Original – Shipper Provided Short Form Straight Bill of Lading – Not Negotiable – Domestic

SHIPPED FROM :
CES Environmental Services - Port Arthur
2420 S. Gulfway Drive
Port Arthur , TX 77640
(713) 676-1460

Release #
11a) PA-2375
11b)
11c)
11c)

The property described below, in apparent good order, except as noted (content and condition of packages unknown), marked, consigned, and destined as indicated below, which said carrier (the word carrier being understood throughout this as meaning any person or corporation authorized to be in possession of the property under the contract) agrees to carry to its usual place of delivery at said destination, if on its route, otherwise to deliver to another carrier on the route to said destination. This Bill of Lading is a receipt for goods; it is not of itself a contract of carriage. It is mutually agreed, as to each carrier of all or as to any said over all or any portion of said route to destination, and as to each party at any time interested in all or any of said property, that every service to be performed hereunder shall be subject to all the terms and conditions contained in the applicable contract between shipper and carrier or intermediary.

For payment: Charges to be billed to Shipper or the "Billed to" party are set forth in the governing contract with Shipper. No charges other than those contained therein may be billed to Shipper or the "Billed to" party without prior written consent of Shipper. The extra copy of this Bill of Lading, furnished at the time of shipment, must be attached to the freight bill submitted to Shipper or the "Billed to" party and sent to:

CONSIGNED TO :
International Paper
300 Williams Lake Road
Pineville , LA 71360

CARRIER :
CES Environmental Services, Inc.
4904 Griggs Rd.
Houston , TX 77021

This is to certify that the product stated below are properly classified, described, packaged, marked and labeled and is in proper condition for transportation according to the applicable regulations of the Department of Transportation. If this Shipment moves between to ports by a carrier by water, the law requires that the Bill of Lading shall state whether it is "carrier's or shipper's weight."

Intermodal Certificate: All information required by Federal Highway Administration regulations at 49 CFR 390.5465 implementing the Intermodal Safe Container Act of 1992 is set forth on the face of this bill of lading. The shipper name herein is the tendering party.

Haz	Container No.	Container Type	Total Quantity	Unit Wt/Vol	Description of Materials, Special Marks, and Exceptions
No	1	TT	47140	P	RQ, Corrosive liquids, n.o.s. (containing sodium hydroxide), 8, UN1760, PG II
No					"SOCHEM FREE SULFIDIC CAUSTIC"

Shipper : CES Environmental Services - Port Arthur
Per : Bo Camberlin **Signature :** Bo **Date :** 4-30-09

Carrier CES Environmental Services, Inc.
Per : P. Whitehead **Signature :** [signature] **Date :** 4-30-09

Receiving Facility : International Paper
Per : Michael Ward **Signature :** _____ **Date :** _____

White (Generator Return Copy) Yellow (Transporter Copy) Pink (Receiving Facility Copy) Golden Rod (Generator 1st Copy)

CES Environmental Services, Inc.

Bill Of Lading # : 85085

Folder ID :	Spent Sulfidic Caustic

Original – Shipper Provided Short Form Straight Bill of Lading – Not Negotiable – Domestic

SHIPPED FROM :
CES Environmental Services - Port Arthur
2420 S. Gulfway Drive
Port Arthur , TX 77640

11a) HOU-2375
11b)
11c)
11c)

The property described below, in apparent good order, except as noted (content and condition of packages unknown), marked, consigned, and destined as indicated below, which said carrier (the word carrier being understood throughout this as meaning any person or corporation authorized to be in possession of the property under the contract) agrees to carry to its unusual place of delivery at said destination, if on its route, otherwise to deliver to another carrier on the route to said destination. This Bill of Lading is a receipt for goods; it is not of itself a contract of carriage. It is mutually agreed, as to each carrier of all or as to any said over all or any portion of said route to destination, and as to each party at any time interested in all or any of said property, that every service to be performed hereunder shall be subject to all the terms and conditions contained in the applicable contract between shipper and carrier or intermediary.

For payment: Charges to be billed to Shipper or the "Billed to" party are set forth in the governing contract with Shipper. No charges other than those contained therein may be billed to Shipper or the "Billed to" party without prior written consent of Shipper. The extra copy of this Bill of Lading, furnished at the time of shipment, must be attached to the freight bill submitted to Shipper or the "Billed to" party and sent to:

CONSIGNED TO :
Boise Cascade
4200 Hwy 190 West
DeRidder , LA 70634

CARRIER :
CES Environmental (Port Arthur)
2420 Gulfway Dr.
Port Arthur , TX 77640

This is to certify that the product stated below are properly classified, described, packaged, marked and labeled and is in proper condition for transportation according to the applicable regulations of the Department of Transportation. If this Shipment moves between to ports by a carrier by water, the law requires that the Bill of Lading shall state whether it is "carrier's or shipper's weight."

Intermodal Certificate: All information required by Federal Highway Administration regulations at 49 CFR 390.5409 implementing the Intermodal Safe Container Act of 1992 is set forth on the face of this bill of lading. The shipper name herein is the tendering party.

Haz	Container No.	Container Type	Total Quantity	Unit Wt/Vol	Description of Materials, Special Marks, and Exceptions
No	1	TT	41,080	P	RQ, Corrosive liquids, n.o.s. (weak caustic solution), 8, UN1760, PG II
No					**delivery of "Weak Caustic Solution" to the Green tank # 3246SDL**

Shipper : CES Environmental Services - Port Arthur
Per : Bo Lumberland **Signature :** Bo **Date :** 4-30-09

Carrier CES Environmental (Port Arthur)
Per : Jose Domingues **Signature :** Jose Domingues **Date :** 05 01 09

Receiving Facility : Boise Cascade
Per : Johnny Kyser **Signature :** [illegible] **Date :** 5-1-09

White (Generator Return Copy) Yellow (Transporter Copy) Pink (Receiving Facility Copy) Golden Rod (Generator 1st Copy)

CES Environmental Services, Inc.

Bill Of Lading # : 85086

Folder ID :	Spent Sulfidic Caustic

Original – Shipper Provided Short Form Straight Bill of Lading – Not Negotiable – Domestic

SHIPPED FROM :
CES Environmental Services - Port Arthur
2420 S. Gulfway Drive
Port Arthur , TX 77640

11a) HOU-2375
11b)
11c)
11c)

The property described below, in apparent good order, except as noted (content and condition of packages unknown), marked, consigned, and destined as indicated below, which said carrier (the word carrier being understood throughout this as meaning any person or corporation authorized to be in possession of the property under the contract) agrees to carry to its usual place of delivery at said destination, if on its route, otherwise to deliver to another carrier on the route to said destination. This Bill of Lading is a receipt for goods; it is not of itself a contract of carriage. It is mutually agreed, as to each carrier of all or as to any said over all or any portion of said route to destination, and as to each party at any time interested in all or any of said property, that every service to be performed hereunder shall be subject to all the terms and conditions contained in the applicable contract between shipper and carrier or intermediary.

For payment: Charges to be billed to Shipper or the "Billed to" party are set forth in the governing contract with Shipper. No charges other than those contained therein may be billed to Shipper or the "Billed to" party without prior written consent of Shipper. The extra copy of this Bill of Lading, furnished at the time of shipment, must be attached to the freight bill submitted to Shipper or the "Billed to" party and sent to:

CONSIGNED TO :
Boise Cascade
4200 Hwy 190 West
DeRidder , LA 70634

CARRIER :
CES Environmental (Port Arthur)
2420 Gulfway Dr.
Port Arthur , TX 77640

This is to certify that the product stated below are properly classified, described, packaged, marked and labeled and is in proper condition for transportation according to the applicable regulations of the Department of Transportation. If this Shipment moves between to ports by a carrier by water, the law requires that the Bill of Lading shall state whether it is "carrier's or shipper's weight."

Intermodal Certificate: All information required by Federal Highway Administration regulations at 49 CFR 390.5409 implementing the Intermodal Safe Container Act of 1992 is set forth on the face of this bill of lading. The shipper name herein is the tendering party.

Haz	Container No.	Container Type	Total Quantity	Unit Wt/Vol	Description of Materials, Special Marks, and Exceptions
No	1	TT	41,700	P	RQ, Corrosive liquids, n.o.s. (weak caustic solution), 8, UN1760, PG II
No					""delivery of "Weak Caustic Solution" to the Green tank # 3246SDL""

Shipper : CES Environmental Services - Port Arthur
Per : Bo Cumberland **Signature :** Bo **Date :** 4-30-09

Carrier CES Environmental (Port Arthur)
Per : Joe Domingez **Signature :** Joe Domingez **Date :** 05/01/09

Receiving Facility : Boise Cascade
Per : Travis Jackson **Signature :** [illegible] **Date :** 5/1/09

White (Generator Return Copy) Yellow (Transporter Copy) Pink (Receiving Facility Copy) Golden Rod (Generator 1st Copy)

CES Environmental Services, Inc.

Bill Of Lading # : 85100

Folder ID :	White Liquor Caustic

Original – Shipper Provided Short Form Straight Bill of Lading – Not Negotiable – Domestic

SHIPPED FROM :
CES Environmental Services - Port Arthur
2420 S. Gulfway Drive
Port Arthur , TX 77640

WHITE LIQUOR WHITE LIQUOR WHITE LIQUOR
11a) HOU-2375
11b)
11c)
11c)

The property described below, in apparent good order, except as noted (content and condition of packages unknown), marked, consigned, and destined as indicated below, which said carrier (the word carrier being understood throughout this as meaning any person or corporation authorized to be in possession of the property under the contract) agrees to carry to its unusual place of delivery at said destination, if on its route, otherwise to deliver to another carrier on the route to said destination. This Bill of Lading is a receipt for goods; it is not of itself a contract of carriage. It is mutually agreed, as to each carrier of all or as to any said over all or any portion of said route to destination, and as to each party at any time interested in all or any of said property, that every service to be performed hereunder shall be subject to all the terms and conditions contained in the applicable contract between shipper and carrier or intermediary.

For payment: Charges to be billed to Shipper or the "Billed to" party are set forth in the governing contract with Shipper. No charges other than those contained therein may be billed to Shipper or the "Billed to" party without prior written consent of Shipper. The extra copy of this Bill of Lading, furnished at the time of shipment, must be attached to the freight bill submitted to Shipper or the "Billed to" party and sent to:

CONSIGNED TO :
Boise Cascade
4200 Hwy 190 West
DeRidder , LA 70634

CARRIER :
CES Environmental (Port Arthur)
2420 Gulfway Dr.
Port Arthur , TX 77640

This is to certify that the product stated below are properly classified, described, packaged, marked and labeled and is in proper condition for transportation according to the applicable regulations of the Department of Transportation. If this Shipment moves between to ports by a carrier by water, the law requires that the Bill of Lading shall state whether it is "carrier's or shipper's weight."

Intermodal Certificate: All information required by Federal Highway Administration regulations at 49 CFR 390.5449 implementing the Intermodal Safe Container Act of 1992 is set forth on the face of this bill of lading. The shipper name herein is the tendering party.

Haz	Container No.	Container Type	Total Quantity	Unit Wt/Vol	Description of Materials, Special Marks, and Exceptions
No	1	TT	45100	P	RQ, Corrosive liquids, n.o.s. (WHITE LIQUOR CAUSTIC), 8, UN1760, PG II

5-1-09

Shipper : CES Environmental Services - Port Arthur
Per : _____ **Signature :** _____ **Date :** 5-01-09

Carrier CES Environmental (Port Arthur)
Per : Sudo Fr... **Signature :** _____ **Date :** 5-01-09

Receiving Facility : Boise Cascade
Per : _____ **Signature :** _____ **Date :** 5-1-09

White (Generator Return Copy) Yellow (Transporter Copy) Pink (Receiving Facility Copy) Golden Rod (Generator 1st Copy)

Waste Codes

EPAPA010000611

Client: ***CES ENVIRONMENTAL***
2420 South Gulfway Drive
Port Arthur, TX 77641

Attn: ***Mr. Matt Bowman***
Phone:1-713-826-1329; Fax: 984-5558
Email: mbowman@cesenvironmental.com

Report Date: 05/28/09
Sample Matrix: Waste Water
Date Collected: 05/22/09
Time Collected: 11:25am
Collected By: Dennis Sahddix
Date Received: 05226/09
Time Received: 01:22pm
Date Analyzed: 05/23/09
Analyzed By: KBR/PPS
CHEMTEX FILE #: P9050704

RESULTS OF ANALYSIS
Site/Location: PACES
Sample Identification: Waste Water TK.
CHEMTEX #: P9050704

CAS #	COMPOUND NAME	Units	Results	MDL	EPA METHOD
095-48-7	o-cresol	mg/l	81.15	10.0	8270C
----	m,p-cresol	mg/l	69.10	10.0	8270C

MDL: Method Detection Limit.

LABORATORY QUALITY ASSURANCE/QUALITY CONTROL DATA

PERCENT RECOVERY OF SURROGATES

COMPOUND NAME	% RECOVERY	LIMITS
Semi-Volatiles		
2-Fluorophenol	90	21-100
Phenol-d6	92	10-94
2,4,6-Tribromophenol	94	10-123

LABORATORY CONTROL SAMPLE (LCS) RECOVERY

Constituents	(%) Recovery
Phenol	97
2-Chlorophenol	97
1,4-Dichlorobenzene	76
N-Nitrosodi-n-propylamine	79
1,2,4-Trichlorobenzene	85
4-Chloro-3-methylphenol	98
Acenaphthene	82
4-Nitrophenol	101
2,4-Dinitrotoluene	78
Pyrene	53

Dr. C. N. Reddy, Ph.D, CIH, ASP
Director

kml/kv*/CNR

NOTICE/DISCLAIMER: The analytical results, opinions or interpretations contained in this report are based upon information and material supplied by the client for whose exclusive and confidential use this report has been made. No person or entity other than the client may rely on this report. Any such reliance will be unjustified. Any person, other than the client, that reads this report does so at his or her own risk. The analytical results, opinions and/or interpretations expressed herein represent the best judgment of Chemtex, based on the information and instructions received from the client. Chemtex makes no warranty or representation, express or implied, of any type, and expressly disclaims same. This report shall not be reproduced, in whole or in part, without the written approval of Chemtex.

CHEMTEX

Environmental & Industrial Hygiene Services
3082 25th Street, Port Arthur, TX 77642
Phone: (409) 983-4575, Fax: (409) 982-1522
E-mail: chemtexpa@sbcglobal.net

CHAIN OF CUSTODY RECORD
ENVIRONMENTAL
ANALYTICAL SERVICES REQUEST

CLIENT: CES Environmental Services **ATTN:** Mr. James Matlock	**ADDRESS:** 2020 South Gulfway Dr. Port Arthur, TX 77641	**Phone #:** 832-231-3035 **Fax #:** **Email:** jmatlock@cesenvironmental.com
BILLING CONTACT/ADDRESS: (If different from above)	**P. O. #:** / **PROJECT NO:** / **PROJECT:**	**SITE/LOCATION:**
SAMPLE(S) COLLECTED BY (PRINT NAME): Jay Matlock	**Expected Turnaround Time** 2-4 hr Rush____ 24 hr Rush___ 48 hr Rush__X___7-14days____	**REQUESTED ANALYSES**

Sample Matrix Codes: Drinking Water: **DW**; Groundwater: **GW**; Liquid Waste: **LW**; Oil(s): **O**; Paint Chips: **PC**; Sand: **Sn**; Sludge: **Sl**; Soil/Solid: **S**; Solid Waste: **SW**; Trip Blank: **TB**; Water: **W**; Wipes: **WP**; Wastewater: **WW**

CHEMTEX #	SAMPLE IDENTIFICATION	COLLECTION Date	COLLECTION Time	Sample Matrix	Composite/ Grab	Chemical Preservative	Sample Containers No.	Sample Containers Size (oz.)	Sample Containers Type (Glass/ Plastic)	Ash Content	Sodium Content						
	Bilge Tk.	4-20-09	1350	LW			1	500m L	P	X	X						
	TK. 600	4-20-09	1600	LW			1	500m L	P	X	X						

Remarks: Samples must be preserved on ice after sample collection and transported in ice chest. ☐ Regulatory ☑ Non-Regulatory

Relinquished By: J.W. Matlock	Date/Time: 4:20p 4:31pm	Received By: Kassie Dewberry	Date/Time: 4/20/09 4:31pm
Relinquished By:	Date/Time:	Received By:	Date/Time:

Facilities also available at: 5544 Leopard St., Corpus Christi, TX 78408; (361)299-9900 chemtexcc@sbcglobal.net and 138 S. Cities Service Hwy., Sulphur, LA 70663 (337) 626-2121 chemtexlc@sbcglobal.net

NOTICE / DISCLAIMER: Client has asked Chemtex to perform the analyses listed above, on the samples described herein. Any analytical results, opinions or interpretations which may be provided to Client are based upon the information and material supplied by Client, for whose exclusive and confidential use a report will be made. No person or entity other than Client may rely on any such report. Any such reliance will be unjustified. Any person, other than Client, that reads or relies on any such report, does so at his or her own risk. Chemtex makes no warranty or representation, express or implied, of any type, and expressly disclaims same. Any report provided by Chemtex shall not be reproduced, in whole or in part, without the written approval of Chemtex. In no event shall Chemtex be responsible for any damage greater than the amount that it received for performing some or all of the analyses listed above

EPAPA010000613

$300.00

CHEMTEX

Environmental & Industrial Hygiene Services
3082 25th Street, Port Arthur, TX 77642
Phone: (409) 983-4575, Fax: (409) 982-1522
E-mail: chemtexpa@sbcglobal.net

CHAIN OF CUSTODY RECORD
ENVIRONMENTAL
ANALYTICAL SERVICES REQUEST

CLIENT: CES Environmental Services **ATTN:** Mr. Matt Bowman	**ADDRESS:** 2420 Gulfway Dr. P.A., TX 77641	**Phone #:** (713)826-1329 **Fax #:** **Email:** mbowman@cesenvi
BILLING CONTACT/ADDRESS: **(If different from above)**	**P. O. #:** / **PROJECT NO:** / **PROJECT:**	**SITE/LOCATI** **PACES**
SAMPLE(S) COLLECTED BY (PRINT NAME): Mike Rudd	**Expected Turnaround Time** **2-4 hr Rush_____ 24 hr Rush___ 48 hr Rush_X_7-14days_____**	**REQUESTED AN**

Sample Matrix Codes: Drinking Water: **DW;** Groundwater: **GW**; Liquid Waste: **LW;** Oil(s): **O;** Paint Chips: **PC;** Sand: **Sn;** Sludge: **Sl**; Soil/Solid: **S;** Solid Waste: **SW;** Trip Blank: **TB;** Water: **W;** Wipes: **WP;** Wastewater: **WW**

CHEMTEX #	SAMPLE IDENTIFICATION	COLLECTION Date	COLLECTION Time	Sample Matrix	Composite/ Grab	Chemical Preservative	Sample Containers No.	Sample Containers Size (oz.)	Sample Containers Type (Glass/ Plastic)	chloride by astm 4327	fluorides by astm 4327	tox by sw846 9020B	nitrogen
	Tk. 601 OSF Sulfur Contained Oils Nitrogen should be less than 25ppm	5-21-09	1400	O	Grab	None	1	500m L	P	X	X	X	

Remarks: Samples must be preserved on ice after sample collection and transported in ice chest. ☐ **Regulatory** ☒ **Non-Regulatory**

Relinquished By:	Date/Time: 5-22-09 1322	Received By: Angela DeCuiit	Date/Time: 5/22/0
Relinquished By:	Date/Time:	Received By:	Date/Time:

EPAPA01000614

CHEMTEX

Environmental & Industrial Hygiene Services
3082 25th Street, Port Arthur, TX 77642
Phone: (409) 983-4575, Fax: (409) 982-1522
E-mail: chemtexpa@sbcglobal.net

$150.00 / 200.00

CHAIN OF CUSTODY RECORD
ENVIRONMENTAL
ANALYTICAL SERVICES REQUEST

CLIENT: CES Environmental Services **ATTN:** Mr. Matt Bowman	**ADDRESS:** 2420 Gulfway Dr. P.A., TX 77641	**Phone #:** (713) 826-1329 **Fax #:** (409) 984-5558 **Email:** mbowman@cesenvornmental.com
BILLING CONTACT/ADDRESS: (If different from above)	**P. O. #:** / **PROJECT NO:** / **PROJECT:**	**SITE/LOCATION:** PACES
SAMPLE(S) COLLECTED BY (PRINT NAME): Dennis Sahddix	**Expected Turnaround Time** 2-4 hr Rush____ 24 hr Rush___ 48 hr Rush____7-14days__X___	**REQUESTED ANALYSES**

Sample Matrix Codes: Drinking Water: **DW**; Groundwater: **GW**; Liquid Waste: **LW**; Oil(s): **O**; Paint Chips: **PC**; Sand: **Sn**; Sludge: **SI**; Soil/Solid: **S**; Solid Waste: **SW**; Trip Blank: **TB**; Water: **W**; Wipes: **WP**; Wastewater: **WW**

CHEMTEX #	SAMPLE IDENTIFICATION	COLLECTION Date	COLLECTION Time	Sample Matrix	Composite/ Grab	Chemical Preservative	Sample Containers No.	Sample Containers Size (oz.)	Sample Containers Type (Glass/ Plastic)			o-cresol	m-cresol	p-cresol			
	Waste Water TK.	5-22-09	11:25a	WW	Grab	None	1	500m L	P			X	X	X			

Remarks: Samples must be preserved on ice after sample collection and transported in ice chest. ☐ **Regulatory** ☒ **Non-Regulatory**

Relinquished By:	Date/Time: 5-22-09 1321	Received By:	Date/Time:
Relinquished By:	Date/Time:	Received By:	Date/Time:

Facilities also available at: 5544 Leopard St., Corpus Christi, TX 78408; (361)299-9900 chemtexcc@sbcglobal.net and 138 S. Cities Service Hwy., Sulphur, LA 70663 (337) 626-2121 chemtexlc@sbcglobal.net

NOTICE / DISCLAIMER: Client has asked Chemtex to perform the analyses listed above, on the samples described herein. Any analytical results, opinions or interpretations which may be provided to Client are based upon the information and material supplied by Client, for whose exclusive and confidential use a report will be made. No person or entity other than Client may rely on any such report. Any such reliance will be unjustified. Any person, other than Client, that reads or relies on any such report, does so at his or her own risk. Chemtex makes no warranty or representation, express or implied, of any type, and expressly disclaims same. Any report provided by Chemtex shall not be reproduced, in whole or in part, without the written approval of Chemtex. In no event shall Chemtex be responsible for any damage greater than the amount that it received for performing some or all of the analyses listed above

waste codes

NOR

FW: Additional Texas Waste Codes for Port Arthur

Prabhaker Thangudu

Sent: Monday, October 06, 2008 3:49 PM

To: Brian Weathers

Cc: Chris Saylor

From: Prabhaker Thangudu
Sent: Tuesday, September 23, 2008 1:16 PM
To: Clinton Hopkins
Cc: Matt Bowman; Marlin Moser; Greg Bowman; Ryan Thomas
Subject: Additional Texas Waste Codes for Port Arthur

Clint:

The following four waste Codes have been added to CES Environmental Services, Inc., Port Arthur Notice of Registration.

	Waste Description	Texas Waste Code Number
1	Class 1 Inorganic Solids	00043191
2	Class 2 Inorganic Solids	00053192
3	Class 1 Inorganic Sludge	00065191
4	Class 2 Inorganic Sludge	00075192

Please let me know if you need additional information.

Thanks
Prabhakar

IHW020

*** TEXAS COMMISSION ON ENVIRONMENTAL QUALITY ***
Notice of Registration
Industrial and Hazardous Waste

Page: 1
Date: 09/10/08

88585 CES Environmental Services Inc

Solid Waste Registration Number: 88585 EPA Id: TXR000079307

Company Name: CES Environmental Services Inc
Site Name: CES Environmental Services Port Arthur
Site Location: 2420 S Gulfway Dr, Port Arthur, TX
Region: 10
County: 123 Jefferson
Land Type: Private
Initial Registration Date: 08/12/2008
Last Amendment Date:
Last Date NOR Computer update: 08/29/2008

Primary Contact: Thangudu, Prabhakar
Title: HSE Manager
Phone: 281-433-9792
Mailing Address: 2420 S Gulfway Dr
Port Arthur, TX 77640-4541
Site Street Address: 2420 S Gulfway Dr
Port Arthur, TX 77640-4541

Registration Status: Active
Registration Type: Generator Transporter
Generator Type: Industrial
Transporter Type: For hire Transport own waste
Transport Wst Class: 1 2 H
Hazardous Waste Generation Status: Conditionally Exempt Small Quantity Generator

Business Description: Chemical manufacturing

NAICS Code: 325188 All Other Basic Inorganic Chemical Manufacturing
Tax Identification #: 17605929854
Handler Status:

Operator Information
Name: CES Environmental Services Inc
Phone: 281-433-9792
Address: 2420 S Gulfway Dr
Port Arthur, TX, 77640-4541

Owner Information
Name: CES Environmental Services Inc
Phone: 281-433-9792
Address: 2420 S Gulfway Dr
Port Arthur, TX, 77640-4541

Billing Contact:
Title:
Phone:
Billing Address:

As of 08/29/2008 - the next unassigned sequence number for WASTES is 0003 and
the next unassigned sequence number for UNITS is 003.

IHW020 *** TEXAS COMMISSION ON ENVIRONMENTAL QUALITY *** Page: 2
Notice of Registration Date: 09/10/08
Industrial and Hazardous Waste

88585 CES Environmental Services Inc

**** WASTE INFORMATION ****

Texas Waste Code	Waste Class	Status	Date of Status	Managed Onsite/ Offsite	Radio-active	TCEQ Audit Complete
****** Active Wastes ******						
00011131 1		Active	08/12/08	On		No

Description from Generator: Wastewater generated in manufacturing. Date of generation: 08-25-2008
Texas Form Code: 113 Other aqueous waste with high dissolved solids
Current Management Units: Tank 001
* Origin Codes: 1 Onsite-process/service

00021132 2		Active	08/12/08	On		No

Description from Generator: Wastewater generated in manufacturing. Date of generation: 08-25-2008
Texas Form Code: 113 Other aqueous waste with high dissolved solids
Current Management Units: Tank 002
* Origin Codes: 1 Onsite-process/service

* The first value is considered the primary value (e.g. primary origin code).
As of 08/29/2008, the next unassigned sequence number for WASTES is 0003.

IHW020

*** TEXAS COMMISSION ON ENVIRONMENTAL QUALITY ***
Notice of Registration
Industrial and Hazardous Waste

88585 CES Environmental Services Inc

**** UNITS AT THIS SITE MANAGING WASTE ****

** 'Active', 'Closure Pending' & 'Closure Request' Units **

Unit Number	Unit Type	Unit Status	Date of Status	Classes of Waste Managed in Unit Onsite / Offsite	Unit Permit Number	Unit # on Permit	Regulatory Status	Deed Recording Needed/Date
001	Tank	Active	08/12/08	1/ NA	NA	NA	Non-Hazardous Regulated	NA /

Description from Company: Wastewater Tank
Capacity: 39000.0000 Capacity Unit of Measure: G
System Types: 141 Storage, bulking, and/or transfer off-site - no tr
Biennial System Regulatory Status: Regulatory status unknown
Wastes Currently Managed in Unit: 00011131 Wastewater

Unit Number	Unit Type	Unit Status	Date of Status	Classes of Waste Managed in Unit Onsite / Offsite	Unit Permit Number	Unit # on Permit	Regulatory Status	Deed Recording Needed/Date
002	Tank	Active	08/12/08	2/ NA	NA	NA	Non-Hazardous Regulated	NA /

Description from Company: Wastewater tank
System Types: 141 Storage, bulking, and/or transfer off-site - no tr
Biennial System Regulatory Status: Regulatory status unknown
Wastes Currently Managed in Unit: 00021132 Wastewater

As of 08/29/2008, the next unassigned sequence number for UNITS is 003.

FW: CES Port Arthur

Prabhaker Thangudu

Sent: Monday, October 06, 2008 3:50 PM

To: Brian Weathers

Cc: Chris Saylor

From: Prabhaker Thangudu
Sent: Wednesday, September 10, 2008 1:57 PM
To: Clinton Hopkins
Cc: Karl Guidry; Marlin Moser; Matt Bowman; Matt Moser; Greg Bowman; Joe Camp; Ryan Thomas; Clark Hickman
Subject: CES Port Arthur

Clint:

The registration process with TCEQ for Port Arthur site is complete and the details ensue.

Solid Waste Registration Number:	**88585**
EPA Id:	**TXR000079307**
NAICS Code:	**325188**
Business Description:	**Chemical Manufacturing**
Hazardous Waste Generation Status:	**Conditionally Exempt Small Quantity Generator**

Please let me know if you need additional information.

Prabhakar

Barge 08/april 09

EPAPA010000622

MERICHEM CHEMICALS & REFINERY SERVICES LLC

MERICHEM CHEMICALS & REFINERY SERVICES LLC
5455 Old Spanish Trail
Houston, Texas 77023
Phone: 713/428-5000
CHEMTREC: 800/424-9300

SODIUM SULFIDE SOLUTION

A. PRODUCT INFORMATION

Product Code:	SSREF
Common Name/Synonyms:	Sodium Sulfide (aqueous) (<100% Sulfidity)
Chemical Name(s):	Sodium Monosulfide
DOT Shipping Name/ID No.:	Corrosive Liquid N.O.S. (Sodium Sulfide Solutions)/UN1760
HMIS Rating:	Health-2 Flammability-0 Reactivity-0 Least=0; Slight=1; Moderate=2; High=3; Extreme=4;
Product Appearance/Description:	A colorless, amber or brown liquid with a characteristic hydrogen sulfide stench. Corrosive to all body tissues. May be fatal if swallowed. Harmful if inhaled. Contact with mineral acid liberates toxic gas (Hydrogen Sulfide). Shipments may contain a small upper layer of hydrocarbon with a flash point of 50°F or lower.

B. FIRST AID INFORMATION

FIRST AID - CONSULT PHYSICIAN PROMPTLY IN ALL CASES

Eye Contact:	Immediately flush the eyes with plenty of running water, including under the eyelids, for at least 15 minutes.
Skin Contact:	Immediately wash from the skin by removing contaminated clothing and flushing the exposed area with plenty of water and soap.
Inhalation:	Remove to fresh air. Have qualified person restore and/or support breathing with oxygen, if needed. Keep warm.
Ingestion:	Quickly give 3 or more glasses of milk or water to drink.

NOTE TO PHYSICIAN
No specific antidote is known. Based on the individual reactions of the patient, the physician's judgment should be used to control symptoms and clinical conditions.

C. HEALTH HAZARD DATA

This material is not listed as a carcinogen by IARC, NTP or OSHA.

This material meets the following health hazard definition(s) according to the OSHA Hazard Communication Standard (29 CFR 1910.1200):

EPAPA010000623

C. HEALTH HAZARD DATA (CONT'D)

_____	Highly Toxic	___x___	Corrosive
_____	Toxic	___x___	Irritant
_____	Non-Hazardous	_____	Sensitizer

Target Organ Toxin: Lungs, skin, eyes, and central nervous system.
Route(s) of Exposure: Absorption of liquid, mist or vapor on skin; eye contact; inhalation of mist or vapor; oral ingestion

SYMPTOMS AND HEALTH EFFECTS OF ACUTE OVEREXPOSURE
Swallowing this material causes intense burning of the mouth and throat, followed by abdominal pain and nausea; these effects may be delayed.

Inhalation of mist causes irritation of respiratory tract and possible systemic poisoning; hydrogen sulfide gas which may be given off when acid is present, causes headache, dizziness, nausea, vomiting; continued exposure can lead to loss of consciousness, respiratory failure and death.

Liquid causes marked eye irritation, itching, lacrimation, swelling and corneal damage, blurring of vision and increased sensitivity to light. Contact with liquid on skin causes irritation and corrosion of tissue; continued exposure may cause dermatitis, chemical burns and temporary loss of hair at site of contact.

D. HANDLING AND STORAGE PRECAUTIONS

Avoid contact with eyes, skin or clothing.
Avoid breathing vapors, mists or spray.
Do not take internally.
Use with adequate ventilation.
Use respiratory protection when overexposure to vapors, mists or spray is possible.
When handling, wear chemical splash goggles, face shield, heavy PVC or butyl rubber gloves and protective clothing.
Keep containers closed.
Store containers in cool, well ventilated areas away from ignition sources.
Avoid use of aluminum, copper and brass alloys in contact with this material in storage and process equipment.

E. PERSONAL PROTECTION INFORMATION

Ventilation: Use adequate ventilation to control exposure to below recommended levels.
Respiratory Protection: Use NIOSH/MSHA approved air supplied respirator.
Eye Protection: Wear chemical safety goggles and a full face shield to protect against splashing.
Skin Protection: Wear chemical resistant gloves when handling this material. Heavy PVC or butyl rubber is recommended. Gloves may be decontaminated by washing with soap and water.

EPAPA010000624

E. PERSONAL PROTECTION INFORMATION (CONT'D)

Other Protective Clothing and Equipment: Impervious protective clothing and chemical resistant footwear should be worn to minimi contact.

F. SPILL, LEAK AND DISPOSAL PROCEDURES

Evacuate area.
Shut off ignition sources.
Only properly trained personnel should respond to spills or leaks.
Wear protective equipment and/or garments as specified in Section E.
When entry must be made into an area where the concentration is unknown, u: NIOSH/MSHA approved self-contained breathing apparatus (SCBA) and protecti equipment as described in Section E.
Absorb spilled liquid onto inert material and transfer into disposal drums.
Large spills should be removed using a vacuum truck.
Wash spill area with water and absorb onto inert material and transfer into dispos: drums.
Spills on areas other than pavement, e.g., dirt, sand, etc., may be handled l removing the affected soils and placing in approved containers.

WASTE DISPOSAL
The materials resulting from clean-up operations of a spill may be hazardous anc therefore, subject to specific regulations. Package, store, transport and dispose c all clean-up materials and any contaminated equipment in accordance with a: applicable federal, state and local regulations. Shipments of waste materials m: be subject to manifesting requirements per applicable regulations. Appropriat disposal will depend on the nature of the waste and should be performed by competer and properly permitted contractors. Ensure that all responsible federal, state ar local agencies receive proper notification of spill and disposal methods.

Spills or releases should be reported, if required, to the appropriate local, stat and federal regulatory agencies.

The Reportable Quantity (RQ) of this material is 20,000 lbs. (2,033 gallons based on Sodium Hydroxide concentration.

MATERIAL REPORTABLE UNDER TITLE III, SECTION 313
The following substance(s) are subject to the reporting requirements of Section 31 of Title III of the Superfund Amendments and Reauthorization Act of 1986 and 40 CF 372. The substances(s) may not be reflected in Section C or G of this MSDS.

Substance	CAS No.	Approx. Wt.%
Sodium Sulfide	1313-82-2	7-12
Sodium Hydroxide	1310-73-2	0-5

Product and/or components entered on EPA's TSCA inventory: YES

EPAPA010000625

G. CHEMICAL OR HAZARDOUS COMPONENTS

Component	CAS No.	Approx. Wt. %	Exposure Guidelines OSHA PEL (ppm)	ACGIH TLV mg/m³
Sodium Sulfide	1313-82-2	7-12	Not Established	
Sodium Hydroxide	1310-73-2	0-5	2(c)*	
Water	7732-18-5	88-93	Not Established	

* (c) = Ceiling

H. FIRE AND EXPLOSION DATA

Flash Point:	None; shipments may contain a small upper layer of hydrocarbon with a flash point of 50°F or lower.
Explosive Range in Air; % by Vol.	
- Lower:	None
- Upper:	None
Fire Extinguish. Media:	Not Pertinent
Special Fire Fighting Procedures:	Not Pertinent
Fire and Explosion Hazards:	Container rupture may occur under fire conditions.

I. REACTIVITY DATA

Stability:	Stable
Conditions to Avoid:	Contact with mineral acid will release toxic and flammable Hydrogen Sulfide (H_2S) gas.
Incompatibility (Materials to Avoid):	Strong oxidizing agents
Hazardous Polymerization:	Not known to occur
Hazardous Decomposition Products:	Toxic and flammable hydrogen sulfide gas is produced when material is heated to decomposition.

J. PHYSICAL DATA

Appearance:	Amber, Brown Liquid
Odor:	Hydrogen Sulfide Stench (rotten eggs)
Odor Threshold:	<1 ppm
pH:	>11.0
Boiling Point:	approx. 220°F (approx. 104°C)
Freezing Point:	approx. 33°F (approx. 0.5°C)
Reid Vapor Pressure:	Not Applicable
Specific Gravity:	1.15-1.18 @ 60°F/60°F
Vapor Density (Air=1):	approx. same as water
Solubility in Water:	Infinite
Coefficient of Octanol/ Water Separation:	Not Available

K. ADDITIONAL COMMENTS

EPAPA010000626

This material is **FOR INDUSTRIAL USE ONLY.**

The information on this form is furnished solely for the purpose of enabling tho who transport, handle or use our products to ensure the safety and health of the employees and to comply with various laws and regulations (federal, state a local). This information is offered in good faith and is believed to be accurat Merichem, however, makes no guarantee or warranty, expressed or implied, regardi the accuracy of these data or the results to be obtained from the use hereof.

EPAPA010000627

Caustic, Spent
Material Safety Data Sheet

CITGO Petroleum Corporation
Lake Charles Manufacturing Complex
P.O. Box 1562
Lake Charles, LA 70602-1562

MSDS No. LC-CST
Revision Date 10/4/2006

IMPORTANT: Read this MSDS before handling or disposing of this product and pass this information on to employees, customers and users of this product.

Hazard Rankings

	HMIS	NFPA
Health Hazard	* 3	3
Fire Hazard	1	1
Reactivity	1	1

* = Chronic Health Hazard

Emergency Overview

Physical State Liquid.
Color Dark green, brown or black. **Odor** Rotten eggs. (Hydrogen sulfide odor).

DANGER!
Corrosive. Causes eye and skin burns.
Causes respiratory irritation and can cause damage to respiratory system.
May be harmful or fatal if swallowed.
If swallowed, seek medical attention immediately.

Extremely flammable and poisonous gas (Hydrogen Sulfide) may be released if this material is heated on comes in contact with acids. Vapor may cause flash fire or explosion.

Protective Equipment

Minimum Recommended
See Section 8 for Details

Minimum PPE reflects the requirements for this material at this facility: CITGO Lake Charles Manufacturing Complex

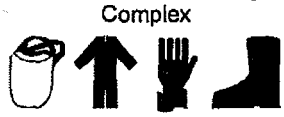

SECTION 1. PRODUCT IDENTIFICATION

Trade Name	Caustic, Spent	**Technical Contact**	(337) 708-6797 (8 AM - 4 PM CST M-F)
Product Number	LC-CTS	**Medical Emergency**	(337) 708-6215 (8 AM - 4 PM CST M-F) (832) 486-4700
CAS Number	Mixture.	**CHEMTREC Emergency (United States Only)**	(800) 424-9300
Product Family	Refinery Intermediate Stream		
Synonyms	Spent Caustic; Used Caustic Solution; Spent NaOH/Water Solution; Used Sodium Hydroxide Solutions; Used Lye Solution; Diluted Neutralizing Agent (Petroleum); Spent Sodium Hydroxide Neutralizing Agent.		

SECTION 2. COMPOSITION (TYPICAL)

Component Name(s)	CAS Registry No.	Concentration (%)
Water	7732-18-5	75 - 95
Sodium Hydroxide	1310-73-2	5 - 20
Methyl mercaptan	74-93-1	0 - 10
Hydrogen Sulfide	7783-06-4	0.1 - 5
Ethyl mercaptan	75-08-1	0 - 5

DC387752

EPAPA010000628

SECTION 3. HAZARDS IDENTIFICATION

Also see Emergency Overview and Hazard Ratings on the top of Page 1 of this MSDS.

Major Route(s) of Entry Skin contact. Inhalation. Ingestion.

Signs and Symptoms of Acute Exposure

Inhalation	Inhalation is not a normal route of exposure for an aqueous liquid. However, vapor generated from this material may be harmful or fatal if inhaled. Contains hydrogen sulfide. Inhalation of gas or vapor may cause severe nose, throat, respiratory tract, and lung irritation, respiratory paralysis, and death, depending on the concentration and duration of exposure. Symptoms are characterized by coughing, choking, or shortness of breath.
Eye Contact	Contact can cause burns and permanent injury to eye tissue. Can cause blindness.
Skin Contact	Contact can cause skin burns and permanent skin damage.
Ingestion	Swallowing this material may be harmful or cause death. Harmful effects include burns and permanent damage to the digestive tract, including the mouth, throat, stomach and intestines. Symptoms may include severe abdominal pain and vomiting of blood. Blood loss through damaged tissue can lead to low blood pressure and shock.
Chronic Health Effects Summary	Prolonged and/or repeated skin contact may produce severe irritation and inflammation. See Toxicological Information (Section 11)
Conditions Aggravated by Exposure	Disorders of the following organs or organ systems that may be aggravated by significant exposure to this material or its components include: Skin, Respiratory System, Central Nervous System (CNS), Eyes
Target Organs	Causes damage to the following organs: skin, eye, lens or cornea. May cause damage to the following organs: blood, lungs, mucous membranes, upper respiratory tract, central nervous system (CNS). Contains material which may cause damage to the following organs: kidneys, liver.
Carcinogenic Potential	This product is not known to contain any components at concentrations above 0.1% which are considered carcinogenic by OSHA, IARC or NTP.

OSHA Hazard Classification is indicated by an "X" in the box adjacent to the hazard title. If no "X" is present, the product does not exhibit the hazard as defined in the OSHA Hazard Communication Standard (29 CFR 1910.1200).

OSHA Health Hazard Classification				OSHA Physical Hazard Classification					
Irritant		Sensitizer		Combustible		Explosive		Pyrophoric	
Toxic	X	Highly Toxic		Flammable		Oxidizer		Water-reactive	
Corrosive	X	Carcinogenic		Compressed Gas		Organic Peroxide		Unstable	

SECTION 4. FIRST AID MEASURES

Take proper precautions to ensure your own health and safety before attempting rescue or providing first aid. For more specific information, refer to Exposure Controls and Personal Protection in Section 8 of this MSDS.

EPAPA010000629

Inhalation	Immediately move exposed individual to fresh air. Monitor for respiratory distress. If the individual is not breathing, immediately begin rescue breathing. If breathing is difficult, 100 percent humidified oxygen should be administered by a qualified individual. Seek medical attention immediately. Persons providing mouth-to-mouth rescue breathing may be placing themselves at risk either from exposure to toxic materials or communicable disease.
Eye Contact	Do not attempt to remove contact lenses. Immediately irrigate eyes with copious amounts of cool, clean, low-pressure water for at least 15 minutes. Hold eyelids apart to ensure complete irrigation of the eye and eyelid tissue. Do not use eye ointment. Seek medical attention immediately.
Skin Contact	Flush thoroughly with cool water under a shower of water for at least 15 minutes while removing contaminated shoes and clothing. Seek medical attention if tissue appears damaged or if pain or irritation persists. Thoroughly clean contaminated clothing before reuse. Discard contaminated leather goods.
Ingestion	Do not induce vomiting. If spontaneous vomiting is about to occur, place victim's head below knees. Do not attempt to neutralize. Have victim rinse mouth with water then drink two to three large glasses of milk or water. Never give anything by mouth to a person who is not fully conscious. Keep airway clear. Seek medical attention immediately.
Notes to Physician	INHALATION: Treat as corrosive material. Monitor for pharyngeal and pulmonary edema. Onset may be delayed up to 24 hours from exposure. Administer supplemental oxygen with assisted ventilation, as required. SKIN: Treat as corrosive material. Wash contaminated skin thoroughly with water or saline. INGESTION: Due to the potential for esophageal or gastrointestinal tract burns following ingestion, do not induce emesis. Careful gastric lavage may be considered. Immediate dilution with water or milk may be beneficial. Do not treat with sodium bicarbonate or attempt to neutralize as this can cause exothermic gas generation and, in severe cases, cause perforation.

SECTION 5. FIRE FIGHTING MEASURES

NFPA Flammability Classification	Non-flammable under normal conditions of use but may generate highly flammable H2S vapor under certain conditions.		
Flash Point	Not applicable.		
Lower Flammable Limit	Non applicable for aqueous solution; 4% for H2S	**Upper Flammable Limit**	Not applicable for aqueous solution; 45% for H2S
Autoignition Temperature	Not determined.		
Hazardous Combustion Products	Material does not support combustion. No hazardous decomposition products are expected.		
Special Properties	This material may evolve hydrogen sulfide (H2S), a highly flammable and poisonous gas. Always check for hazardous vapors and take appropriate precautions.		
Extinguishing Media	Not expected to present a fire or explosion hazard. Use foam, waterspray, dry chemical, or carbon dioxide (CO_2) as extinguishing agents should this material become involved in a fire.		
Protection of Fire Fighters	Firefighters must use full bunker gear including NIOSH-approved positive pressure self-contained breathing apparatus to protect against potential hazardous combustion or decomposition products and oxygen deficiencies. Withdraw immediately from the area if there is a rising sound from a venting safety device or discoloration of vessels, tanks, or pipelines.		

EPAPA010000630

SECTION 6. ACCIDENTAL RELEASE MEASURES

Take proper precautions to ensure your own health and safety before attempting spill control or clean-up. For more specific information, refer to the Emergency Overview on Page 1, Exposure Controls and Personal Protection in Section 8 and Disposal Considerations in Section 13 of this MSDS.

Do not touch damaged containers or spilled material unless wearing appropriate protective clothing. Stop leak if you can do it without risk. Prevent entry into waterways, sewers, basements or confined areas. Do not get water inside containers. Minor leaks or spills can be diluted and neutralized with plenty of water. To avoid the evolution of poisonous hydrogen sulfide gas, this acid must not be allowed to contact sulfide wastes (as in sewers). Absorb or cover the neutralized residue with dry earth, sand, or other non-combustible material and transfer to containers. All clean-up materials should be removed for proper treatment or disposal. Contain large spills to maximize product recovery or disposal. Prevent entry into waterways or sewers. In urban area, cleanup spill as soon as possible; in natural environments, cleanup on advice from ecologists to minimize physical habitat damage. Comply with all laws and regulations.

SECTION 7. HANDLING AND STORAGE

Handling

Monitor for H_2S during tank gauging and similar operations.
Do not breathe vapor or mist. Do not get in eyes, on skin or on clothing. Wear suitable personal protective equipment to prevent eye and skin contact. Wash thoroughly after handling.
Use appropriate respiratory protection.

Storage

Store in glass or other approved containers away from chemicals and combustible materials. Store in a cool, dry, secure and well ventilated area away from sunlight. Keep away from heat, sparks and flame. Keep container tightly closed. Storage area should be equipped with an appropriate chemical resistant floor. Drainage facilities should be constructed for containment of small spills.

SECTION 8. EXPOSURE CONTROLS AND PERSONAL PROTECTION

Engineering Controls

Local exhaust and general room ventilation may be required in work areas to prevent accumulation of mixtures of gas and air that may ignite with explosive force. If mechanical ventilation is used, all equipment must comply with the National Electrical Code (NEC) Standards. If engineering controls and work practices are not effective in controlling exposure to this material, then wear suitable personal protection equipment including approved supplied air respiratory protection. Ensure that an emergency eye wash station and safety shower are located near the work-station. Where H2S is routinely stored or handled, install monitoring equipment or system with alarms.

Personal Protective Equipment

Personal protective equipment should be selected based upon the conditions under which this material is used. A hazard assessment of the work area for PPE requirements should be conducted by a qualified professional pursuant to OSHA regulations. The following pictograms represent the minimum requirements for personal protective equipment. For certain operations, additional PPE may be required.

Minimum PPE reflects the requirements for this material at this facility: CITGO Lake Charles Manufacturing Complex

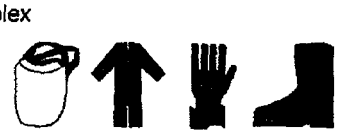

Eye Protection

Safety glasses equipped with side shields are recommended as minimum protection in industrial settings. When there is a likelihood of misting, splashing, or spraying, chemical-resistant goggles and full-face shield should be worn. Suitable eye wash water should be readily available.

Hand Protection Avoid skin contact. Disposable neoprene, rubber, or vinyl gloves are required for use. Wash hands and other exposed skin with mild soap and water before eating, drinking, smoking, or using the toilet facilities.

Body Protection Avoid all skin contact. If splashing or spraying is expected, chemical-resistant protective clothing should be worn. Protective clothing should include long-sleeves, apron, slicker suit, boots and additional facial protection. Use a full-body corrosives suit whenever appropriate. If general contact occurs, IMMEDIATELY get under an emergency shower and remove contaminated clothing. Then take a thorough shower. Contaminated leather goods should be removed immediately and discarded.

Respiratory Protection For known vapor concentrations above the occupational exposure guidelines (see below), use a NIOSH-approved acid gas-organic vapor respirator if adequate protection is provided. Protection factors vary depending upon the type of respirator used. Respirators should be used in accordance with OSHA requirements (29 CFR 1910.134).

General Comments Use good personal hygiene practices. Wash hands and other exposed skin areas with plenty of mild soap and water before eating, drinking, smoking, use of toilet facilities, or leaving work. Do not use gasoline, kerosene, solvents, or harsh abrasive skin cleaners. Use of personal protective equipment and good personal hygiene are essential to controlling exposures to this aqueous solution.

Occupational Exposure Guidelines

Substance	Applicable Workplace Exposure Levels
Ethyl mercaptan	**ACGIH (United States).** TWA: 0.5 ppm 8 hour(s). CEIL: 10 ppm
Methyl mercaptan	**ACGIH TLV (United States).** TWA: 0.5 ppm 8 hour(s). **OSHA PEL Z2 (United States).** CEIL: 10 ppm
Hydrogen Sulfide	**ACGIH TLV (United States).** TWA: 10 ppm 8 hour(s). STEL: 15 ppm 15 minute(s). **OSHA (United States).** CEIL: 20 ppm 8 hour(s). STEL: 50 ppm 15 minute(s). Form: *10 minute peak; once per 8 hour shift
Sodium Hydroxide	**ACGIH TLV (United States).** CEIL: 2 mg/m^3 **OSHA (United States).** TWA: 2 mg/m^3 8 hour(s).

SECTION 9. PHYSICAL AND CHEMICAL PROPERTIES (TYPICAL)

Physical State	Liquid.	**Color**	Dark green, brown or black.	**Odor**	Rotten eggs. (Hydrogen sulfide odor).
Specific Gravity	1.22 (Water = 1) (Estimated.)	**pH**	> 12.5	**Vapor Density**	>1
Boiling Range	The lowest known value is 100°C (212°F) (Water).			**Melting/Freezing Point**	0°C (32°F)
Vapor Pressure	The highest known value is 2.3 kPa (17.5 mm Hg) (at 20°C) (Water).			**Volatility**	Non-volatile.

Solubility in Water	Easily soluble in cold water.	**Viscosity (cSt @ 40°C)**	Not determined.
Flash Point	Not applicable.		
Additional Properties	No additional information.		

SECTION 10. STABILITY AND REACTIVITY

Chemical Stability	Stable.	**Hazardous Polymerization**	Not expected to occur.
Conditions to Avoid	Keep away from water reactive materials.		
Materials Incompatibility	May react or be incompatible with acids.		
Hazardous Decomposition Products	This material may react with water and acid solutions to liberate hydrogen sulfide.		

SECTION 11. TOXICOLOGICAL INFORMATION

For other health-related information, refer to the Emergency Overview on Page 1 and the Hazards Identification in Section 3 of this MSDS.

Toxicity Data

Sodium Hydroxide
DERMAL (LD50): Acute: 1350 mg/kg [Rabbit].

A severe eye, skin and respiratory tract irritant. Corrosive to many organic compounds. If ingested, sodium hydroxide can cause severe pain, bloody diarrhea, cardiovascular collapse and death.

Methyl mercaptan

At concentrations above 50 ppm, methyl and ethyl mercaptans can inhibit respiration. Chronic exposures have been associated with pulmonary edema, hemolytic anemia, methemoglobilemia, kidney and liver damage. Also, these mercaptans can cause eye irritation.

Hydrogen Sulfide
INHALATION (LC50): Acute: 444 ppm 1 hour(s) [Rat]. 673 ppm 1 hour(s) [Mouse].
Hydrogen Sulfide (H_2S) has an unpleasant odor that diminishes with increased concentrations. Eye irritation can occur at concentrations above four ppm. Olfactory fatigue occurs rapidly at concentrations above 50. Accordingly, odor is not a reliable warning property. Symptoms increase with exposures above 50 ppm. Respiratory effects including irritation with possible pulmonary edema can occur with exposure above 50 ppm. At concentrations above 500 ppm, an immediate loss of consciousness, depressed respiration and death can occur. NIOSH has determined that H_2S concentrations at or above 100 ppm are immediately dangerous to life and health.

EPAPA010000633

SECTION 12. ECOLOGICAL INFORMATION

Ecotoxicity An environmental fate analysis is not available for this specific product.

Environmental Fate This product is miscible in water and is expected to readily disperse in marine environments.

SECTION 13. DISPOSAL CONSIDERATIONS

Hazard characteristic and regulatory waste stream classification can change with product use. Accordingly, it is the responsibility of the user to determine the proper storage, transportation, treatment and/or disposal methodologies for spent materials and residues at the time of disposition.

Recovered non-usable material may be regulated by US EPA as a hazardous waste due to its corrosivity (D002). In addition, conditions of use may cause this material to become a hazardous waste, as defined by Federal or State regulations. It is the responsibility of the user to determine if the material is a hazardous waste at the time of disposal. Transportation, treatment, storage, and disposal of waste material must be conducted in accordance with RCRA regulations (see 40 CFR Parts 260 through 271). State and/or local regulations might be even more restrictive. Contact your regional US EPA office for guidance concerning case specific disposal issues.

SECTION 14. TRANSPORT INFORMATION

This material has not been evaluated for proper Department of Transportation shipping name and hazard classification. If shipped in commerce, it may be a DOT Hazardous Material. Contact your transportation specialist or call the technical contact on this MSDS for assistance.

SECTION 15. REGULATORY INFORMATION

TSCA Inventory This product and/or its components are listed on the Toxic Substances Control Act (TSCA) inventory.

SARA 302/304 Emergency Planning and Notification The Superfund Amendments and Reauthorization Act of 1986 (SARA) Title III requires facilities subject to Subparts 302 and 304 to submit emergency planning and notification information based on Threshold Planning Quantities (TPQs) and Reportable Quantities (RQs) for "Extremely Hazardous Substances" listed in 40 CFR 302.4 and 40 CFR 355.
Methyl mercaptan, CAS Number, 74-93-1 Concentration: 5%
Hydrogen sulfide, CAS Number, 7783-06-4 Concentration: 2.55%

SARA 311/312 Hazard Identification The Superfund Amendments and Reauthorization Act of 1986 (SARA) Title III requires facilities subject to this subpart to submit aggregate information on chemicals by "Hazard Category" as defined in 40 CFR 370.2. This material would be classified under the following hazard categories:

reactive, Acute (Immediate) Health Hazard,

SARA 313 Toxic Chemical Notification and Release Reporting This product contains the following components in concentrations above *de minimis* levels that are listed as toxic chemicals in 40 CFR Part 372 pursuant to the requirements of Section 313 of SARA:
Hydrogen sulfide [CAS No.: 7783-06-4] Concentration: 2.5%

CERCLA	The Comprehensive Environmental Response, Compensation, and Liability Act of 1980 (CERCLA) requires notification of the National Response Center concerning release of quantities of "hazardous substances" equal to or greater than the reportable quantities (RQ's) listed in 40 CFR 302.4. As defined by CERCLA, the term "hazardous substance" does not include petroleum, including crude oil or any fraction thereof which is not otherwise specifically designated in 40 CFR 302.4. Chemical substances present in this product or refinery stream that may be subject to this statute are: Hydrogen sulfide [CAS No.: 7783-06-4] RQ = 100 lbs. (45.36 kg) Concentration: 2.5%
Clean Water Act (CWA)	This material is classified as an oil under Section 311 of the Clean Water Act (CWA) and the Oil Pollution Act of 1990 (OPA). Discharges or spills which produce a visible sheen on waters of the United States, their adjoining shorelines, or into conduits leading to surface waters must be reported to the EPA's National Response Center at (800) 424-8802.
California Proposition 65	This product is not known to contain any components for which the State of California has found to cause cancer, birth defects or other reproductive harm.
New Jersey Right-to-Know Label	For New Jersey R-T-K labeling requirements, refer to components listed in Section 2.
Additional Regulatory Remarks	No additional regulatory remarks.

SECTION 16. OTHER INFORMATION

Refer to the top of Page 1 for the HMIS and NFPA Hazard Ratings for this product.

REVISION INFORMATION

Version Number	2.1
Revision Date	10/4/2006
Print Date	Printed on 10/4/2006.

ABBREVIATIONS

AP: Approximately EQ: Equal >: Greater Than <: Less Than NA: Not Applicable ND: No Data NE: Not Establishe

ACGIH: American Conference of Governmental Industrial Hygienist: AIHA: American Industrial Hygiene Associatior

IARC: International Agency for Research on Cancer NTP: National Toxicology Program

NIOSH: National Institute of Occupational Safety and Health OSHA: Occupational Safety and Health Administration

NPCA: National Paint and Coating Manufacturers Association HMIS: Hazardous Materials Information System

NFPA: National Fire Protection Association EPA: US Environmental Protection Agency

DISCLAIMER OF LIABILITY

THE INFORMATION IN THIS MSDS WAS OBTAINED FROM SOURCES WHICH WE BELIEVE ARE RELIABLE. HOWEVER, THE INFORMATION IS PROVIDED WITHOUT ANY WARRANTY, EXPRESSED OR IMPLIED REGARDING ITS CORRECTNESS. SOME INFORMATION PRESENTED AND CONCLUSIONS DRAWN HEREIN ARE FROM SOURCES OTHER THAN DIRECT TEST DATA ON THE SUBSTANCE ITSELF. THIS MSDS WAS PREPARED AND IS TO BE USED ONLY FOR THIS PRODUCT. IF THE PRODUCT IS USED AS A COMPONENT IN ANOTHER PRODUCT, THIS MSDS INFORMATION MAY NOT BE APPLICABLE. USERS SHOULD MAKE THEIR OWN INVESTIGATIONS TO DETERMINE THE SUITABILITY OF THE INFORMATION OR PRODUCTS FOR THEIR PARTICULAR PURPOSE.

THE CONDITIONS OR METHODS OF HANDLING, STORAGE, USE, AND DISPOSAL OF THE PRODUCT ARE BEYOND OUR CONTROL AND MAY BE BEYOND OUR KNOWLEDGE. FOR THIS AND OTHER REASONS, WE DO NOT ASSUME RESPONSIBILITY AND EXPRESSLY DISCLAIM LIABILITY FOR LOSS, DAMAGE OR EXPENSE ARISING OUT OF OR IN ANY WAY CONNECTED WITH HANDLING, STORAGE, USE OR DISPOSAL OF THE PRODUCT.

***** END OF MSDS *****

VALERO

MATERIAL SAFETY DATA SHEET

Spent Sulfidic Caustic

VALERO MARKETING & SUPPLY COMPANY
and Affiliates
P.O. Box 696000
San Antonio, TX 78269-6000

Emergency Phone Numbers
24 Hour Emergency: 866-565-5220
Chemtrec Emergency: 800-424-9300

General Assistance
General Assistance: 210-345-4593

BRAND NAMES: Valero, Diamond Shamrock, Shamrock, Ultramar, Beacon, Total

Section 1. Chemical Product and Company Identification

Common / Trade name : Spent Sulfidic Caustic

SYNONYMS/COMMON NAMES: This Material Safety Data Sheet applies to the listed products and synonym descriptions for Hazard Communication purposes only. Technical specifications vary greatly depending on the product and are not reflected in this document. Consult specification sheets for technical information. This product contains ingredients that are considered to be hazardous as defined by the OSHA Hazard Communication Standard (29 CFR 1910.1200).

Material uses : This product is intended for use as a refinery feedstock, fuel, or for use in engineered processes. Use in other applications may result in higher exposures and require additional controls, such as local exhaust ventilation and personal protective equipment.

MSDS # : 615

CAS # : Mixture

Section 2. Composition, information on ingredients

Name	CAS number	Concentration (%)
Sodium Sulfide	1313-82-2	1 - 15
Sodium Hydroxide	1310-73-2	0 - 15
Hydrogen Sulfide	7783-06-4	0.1 - 0.2

Section 3. Hazards Identification

DANGER: Corrosive material. Avoid contact with eyes and skin in mist or liquid form. Do not eat, drink, or smoke while using this product. Store in properly labeled tanks or containers. Do not store near strong acids, organic chemicals, e.g. solvents, alcohols, etc. contact with acids may generate toxic gas hydrogen sulfide.
The fumes may contain hydrogen sulfide, avoid breathing fumes. Wash with soap and water before eating, drinking, smoking or using toilet facilities.

Physical state : Liquid.

Emergency overview : Warning!

MAY BE FATAL IF INHALED.
HARMFUL IF SWALLOWED.
CAUSES SKIN IRRITATION.
CONTAINS MATERIAL WHICH CAUSES DAMAGE TO THE FOLLOWING ORGANS: LUNGS, RESPIRATORY TRACT, SKIN, EYE, LENS OR CORNEA.
Avoid contact with skin and clothing. Wash thoroughly after handling.

Continued on next page

Routes of entry : Dermal contact. Eye contact. Inhalation. Ingestion.

Potential acute health effects

Eyes : Severely corrosive to the eyes. Inflammation of the eye is characterized by redness, watering and itching. May cause corneal opacity. Liquid, spray or mist may produce tissue damage, particularly to mucous membranes of eyes, mouth and respiratory tract. May cause severe irritation, redness, tearing, blurred vision and conjunctivitis. Severe eye damage may result. Liquid in the eye can cause severe destruction and blindness. These effects can occur rapidly effecting all parts of the eye. Mists at high concentrations can cause destructive burns.

Skin : Corrosive to skin on contact. Skin contact can produce inflammation and blistering. Skin inflammation is characterized by itching, scaling, reddening or, occasionally, blistering. Major potential hazard to skin. Contact with the skin can cause severe burns with deep ulcerations. Contact with solution or mist can cause multiple burns with temporary loss of hair at burn site. Solutions of 4% Sodium Hydroxide may not cause irritation and burning for several hours, while 25-50% solutions cause these effects in less than 3 minutes. Prolonged or repeated contact may cause moderate irritation, defatting (cracking), redness, itching, inflammation, dermatitis and possible secondary infection. High pressure skin injections are SERIOUS MEDICAL EMERGENCIES. Injury may not appear serious at first. Within a few hours, tissues will become swollen, discolored and extremely painful.

Inhalation : Corrosive to the respiratory system. Inhalation of the spray or mist may produce severe irritation of respiratory tract, characterized by coughing, choking or shortness of breath. Possible risk of irreversible effects. After the initial episode, individuals should be followed for the delayed appearance of pulmonary edema and chemical pneumonitis. Warning - Hydrogen sulfide (H_2S) and other hazardous vapors may evolve and collect in the headspace of storage tanks or other enclosed vessels. Inhalation of vapors, mist or fumes (generated at high temperatures) may cause irritation to the eyes, nose, throat and respiratory tract. Additionally, inhalation of high concentrations may cause CNS (Central nervous System) depression and/or chemical pneumonitis. In worst cases immediate comma and death may occur. Hydrogen sulfide is an extremely toxic gas.

Inhalation of solution mists can cause mild irritation at 2 mg/m3. More severe burns and tissue damage at the upper respiratory tract, can occur at higher concentrations.

Ingestion : Irritating to mouth, throat and stomach. May cause burns to mouth, throat and stomach. May be fatal if swallowed. This product may be harmful or fatal if swallowed. This product may cause nausea, vomiting, diarrhea and restlessness. DO NOT INDUCE VOMITING. Aspiration into the lungs can cause severe chemical pneumonitis or pulmonary edema/hemorrhage, which can be fatal. Accidental ingestion of sodium hydroxide can cause severe burning and pain in lips, mouth, throat and stomach. Severe scarring of the throat can occur after swallowing. Death can result from ingestion.

Medical conditions aggravated by over-exposure : Preexisting eye, skin, and respiratory disorders may be aggravated by exposure to this product.

Over-exposure signs/symptoms : After the initial episode, individuals should be followed for the delayed appearance of pulmonary edema and chemical pneumonitis.

See toxicological information (section 11)

Continued on next page

Section 4. First Aid Measures

Eye contact : In case of contact, immediately flush eyes with plenty of water for at least 15 minutes. Get medical attention immediately. May cause severe irritation, redness, tearing, blurred vision and conjunctivitis. Severe eye damage may result. Liquid in the eye can cause severe destruction and blindness. These effects can occur rapidly effecting all parts of the eye. Mists at high concentrations can cause destructive burns.

Skin contact : In case of contact, immediately flush skin with plenty of water. Remove contaminated clothing and shoes. Wash clothing before reuse. Clean shoes thoroughly before reuse. Get medical attention. Major potential hazard to skin. Contact with the skin can cause severe burns with deep ulcerations. Contact with solution or mist can cause multiple burns with temporary loss of hair at burn site. Solutions of 4% Sodium Hydroxide may not cause irritation and burning for several hours, while 25-50% solutions cause these effects in less than 3 minutes. Prolonged or repeated contact may cause moderate irritation, defatting (cracking), redness, itching, inflammation, dermatitis and possible secondary infection. High pressure skin injections are SERIOUS MEDICAL EMERGENCIES. Injury may not appear serious at first. Within a few hours, tissues will become swollen, discolored and extremely painful.

Inhalation : If inhaled, remove to fresh air. If breathing is difficult, give oxygen. If not breathing, give artificial respiration. Get medical attention. Warning - Hydrogen sulfide (H2S) and other hazardous vapors may evolve and collect in the headspace of storage tanks or other enclosed vessels. Inhalation of vapors, mist or fumes (generated at high temperatures) may cause irritation to the eyes, nose, throat and respiratory tract. Additionally, inhalation of high concentrations may cause CNS (Central nervous System) depression and/or chemical pneumonitis. In worst cases immediate comma and death may occur. Hydrogen sulfide is an extremely toxic gas.

Inhalation of solution mists can cause mild irritation at 2 mg/m3. More severe burns and tissue damage at the upper respiratory tract, can occur at higher concentrations.

Ingestion : Do not induce vomiting unless directed to do so by medical personnel. Never give anything by mouth to an unconscious person. If potentially dangerous quantities of this material have been swallowed, call a physician immediately.

Notes to physician : In case of ingestion, treat symptomatically. Consideration should be given to the use of an intratracheal tube, to prevent aspiration. Individuals intoxicated by the product should be hospitalized immediately. Positive pressure ventilation may be necessary. After the initial episode, individuals should be followed for the delayed appearance of pulmonary edema and chemical pneumonitis. Individuals with chronic pulmonary disease will be more seriously impaired, and recovery from inhalation exposure may be complicated. In case of skin injection, prompt debridement of the wound is necessary to minimize necrosis and tissue loss.

Section 5. Fire Fighting Measures

Flammability of the product : May be combustible at high temperature.

Products of combustion : These products are sulfur oxides (SO_2, SO_3 etc.). Some metallic oxides.

Fire-fighting media and instructions : Use an extinguishing agent suitable for the surrounding fire. Foam, dry chemical or carbon dioxide type extinguishing agents may all be suitable for product, depending on size or potential size of fire and circumstances related to the situation. Plan fire protection and response strategy through consultation with local fire protection authorities or appropriate specialists.
Fires involving small amounts of combustibles may be smothered with suitable dry chemical. Use water on combustibles burning in vicinity of this material but use care as water applied directly to this acid results in evolution of heat and causes spattering. Use water to flush spills away from sources of ignition. Do not flush down public sewers.

No specific hazard.

Continued on next page

Special protective equipment for fire-fighters : Fire-fighters should wear appropriate protective equipment and self-contained breathing apparatus (SCBA) with a full face-piece operated in positive pressure mode.

Special remarks on fire hazards :

Special remarks on explosion hazards :

Section 6. Accidental Release Measures

Personal precautions : Immediately contact emergency personnel. Keep unnecessary personnel away. Use suitable protective equipment (section 8).

Environmental precautions : If facility or operation has an "oil or hazardous substance contingency plan", activate its procedures. Stay upwind and away from spill. Wear appropriate protective equipment including respiratory protection as conditions warrant. Do not enter or stay in area unless monitoring indicates that it is safe to do so. Isolate hazard area and restrict entry to emergency crew. Extremely flammable. Review Fire Fighting Measures section before proceeding with clean up. Keep all sources of ignition (flames, smoking, flares, etc.) and hot surfaces away from release. Contain spill in smallest possible area. Recover as much product as possible (e.g., by vacuuming). Stop leak if it can be done without risk. Use water spray to disperse vapors. Spilled material may be absorbed by an appropriate absorbent, and then handled in accordance with environmental regulations. Prevent spilled material from entering sewers, storm drains, other unauthorized treatment or drainage systems and natural waterways. Contact fire authorities and appropriate federal, state and local agencies. If spill of any amount is made into or upon navigable waters, the contiguous zone, or adjoining shorelines, contact the National Response Center at 800-424- 8802. For highway or railway spills, contact Chemtrec at 800-424-9300.

Section 7. Handling and Storage

Handling : Avoid contact with skin and clothing. Keep container closed. Use only with adequate ventilation. Avoid breathing vapor or mist. Wash thoroughly after handling. To avoid fire or explosion, dissipate static electricity during transfer by grounding and bonding containers and equipment before transferring material. Use good personal hygiene practices. After handling this product, wash hands before eating, drinking, or using toilet facilities.

Storage : Keep container tightly closed. Keep container in a cool, well-ventilated area.

Section 8. Exposure controls, personal protection

Engineering controls : Provide a readily-accessible eyewash facility and quick-drench safety shower. Keep container tightly closed and in a well-ventilated place. Local exhaust ventilation should be provided.

Personal protection

Eyes : Safety eyewear complying with an approved standard should be used when a risk assessment indicates this is necessary to avoid exposure to liquid splashes, mists or dusts. face shield splash goggles

Skin : Personal protective equipment for the body should be selected based on the task being performed and the risks involved and should be approved by a specialist before handling this product.

Respiratory : Use a properly fitted, air-purifying or air-fed respirator complying with an approved standard if a risk assessment indicates this is necessary.Respirator selection must be based on known or anticipated exposure levels, the hazards of the product and the safe working limits of the selected respirator.

Hands : Chemical-resistant, impervious gloves complying with an approved standard should be worn at all times when handling chemical products if a risk assessment indicates this is necessary.

Continued on next page

Personal protective equipment (Pictograms) : Consult your Supervisor or S.O.P. for special handling directions.

Personal protection in case of a large spill : Splash goggles. Full suit. Boots. Gloves. Suggested protective clothing might not be adequate. Consult a specialist before handling this product. Wear MSHA/NIOSH-approved self-contained breathing apparatus or equivalent and full protective gear.

Component	Exposure limits
Sodium Hydroxide	**ACGIH TLV (United States, 1/2005).** CEIL: 2 mg/m^3 Form: All forms **NIOSH REL (United States, 12/2001).** CEIL: 2 mg/m^3 Form: All forms **OSHA PEL (United States, 8/1997).** TWA: 2 mg/m^3 8 hour/hours. Form: All forms
Hydrogen Sulfide	**ACGIH TLV (United States, 9/2004).** TWA: 10 ppm 8 hour/hours. Form: All forms STEL: 15 ppm 15 minute/minutes. Form: All forms **NIOSH REL (United States, 12/2001).** CEIL: 10 ppm 10 minute/minutes. Form: All forms **OSHA PEL Z2 (United States, 8/1997).** CEIL: 20 ppm Form: All forms AMP: 50 ppm 10 minute/minutes. Form: All forms

Consult local authorities for acceptable exposure limits.

Section 9. Physical and Chemical Properties

Physical state : Liquid.
Color : Dark Orange. Green. Light brown.
Odor : Sulfurous.
pH : >11 [Basic.]
Boiling point : >104°C (219.2°F)
Melting/freezing point : 0.5°C (32.9°F)
Specific gravity : 1.13 to 1.18 (Water = 1) (@ 60 °F)
Solubility : Soluble in cold water.

Section 10. Stability and reactivity data

Stability and reactivity : The product is stable.
Incompatibility with various substances : Extremely reactive or incompatible with oxidizing agents, reducing agents, organic materials, acids, water.

Section 11. Toxicological Information

Toxicity data

HYDROGEN SULFIDE can affect the body if it is inhaled or if it comes into contact with the eyes, skin, nose or throat. It can also affect the body if it is swallowed. It is colorless and has the odor of rotten eggs. However, its odor cannot be used as an indication of its presence since one of the first effects of H2S exposure is the loss of the sense of smell. Inhalation of high concentrations of hydrogen sulfide, 1000 to 2000 ppm, may cause coma after a single breath and may be rapidly fatal, convulsions can also occur. Hydrogen sulfide gas is a rapidly acting systemic poison which causes respiratory paralysis with consequent asphyxia at high concentrations (500 to 1000 ppm). A case of polyneuritis and encephalopathy from one day's exposure to a concentration insufficient to cause loss of consciousness has been reported. It irritates the eyes and respiratory tract at lower concentrations (50 to 500 ppm). Pulmonary edema and bronchial pneumonia may follow prolonged exposure at concentrations exceeding 250 ppm. Exposure to concentrations of hydrogen sulfide around 50 ppm for one hour may produce rhinitis, pharyngitis, bronchitis, pneumonitis, acute conjunctivitis with pain, lacrimation and photophobia, in severe form this may progress to keratoconjunctivitis and vesiculation of the corneal epithelium. In lower concentrations, hydrogen sulfide may cause headache, fatigue, irritability, insomnia, and gastrointestinal disturbances, as well as central nervous system disturbances, causing excitation

Continued on next page

and dizziness. Repeated exposure to hydrogen sulfide results in increased susceptibility, so that eye irritation, cough and systemic effects may result from concentrations previously tolerated without any effect.

Ingredient name	Test	Result	Route	Species
Sodium Sulfide	LD50	208 mg/kg	Oral	Rat
	LD50	205 mg/kg	Oral	Mouse
Sodium Hydroxide	LDLo	500 mg/kg	Oral	Rabbit
Hydrogen Sulfide	LC50	444 ppm (1 hour/hours)	Inhalation	Rat
	LC50	673 ppm (1 hour/hours)	Inhalation	Mouse

IDLH :

Chronic effects on humans : Contains material which causes damage to the following organs: lungs, upper respiratory tract, skin, eye, lens or cornea.

Other toxic effects on humans : Very dangerous in case of skin contact (corrosive, irritant, sensitizer, permeator), eye contact (irritant), ingestion or inhalation.

Specific effects

Carcinogenic effects : No known significant effects or critical hazards.

Target organs : Contains material which causes damage to the following organs: lungs, upper respiratory tract, skin, eye, lens or cornea.

Section 12. Ecological Information

Ecotoxicity data

Ingredient name	Species	Period	Result
Sodium Sulfide	Poecilia reticulata (LC50)	96 hour/hours	15 mg/l
Hydrogen Sulfide	Pimephales promelas (LC50)	96 hour/hours	0.007 mg/l
	Oncorhynchus mykiss (LC50)	96 hour/hours	0.007 mg/l
	Pimephales promelas (LC50)	96 hour/hours	0.0071 mg/l
	Lepomis macrochirus (LC50)	96 hour/hours	0.009 mg/l
	Pimephales promelas (LC50)	96 hour/hours	0.0107 mg/l
	Oncorhynchus mykiss (LC50)	96 hour/hours	0.012 mg/l

Products of degradation :

Toxicity of the products of biodegradation : N/A

Section 13. Disposal Considerations

Waste disposal : Do not puncture or incinerate container. Disposal of this product, solutions and any by-products should at all times comply with the requirements of environmental protection and waste disposal legislation and any regional local authority requirements.

Consult your local or regional authorities.

Section 14. Transport Information

Regulatory information	UN number	Proper shipping name	Class	Packing group	Label	Additional information
DOT Classification	UN1760	Corrosive liquids, n.o.s.	8	II		NAERG #154

Continued on next page

TDG Classification	UN1760	Corrosive liquids, n.o.s.	8	II		Not available.

Section 15. Regulatory Information

United States

U.S. Federal regulations : TSCA 8(b) inventory: Sodium Sulfide; Hydrogen Sulfide; Sodium Hydroxide
TSCA precursor chemical list: Sodium Sulfide
SARA 302/304/311/312 extremely hazardous substances: No products were found.
SARA 302/304 emergency planning and notification: No products were found.
SARA 302/304/311/312 hazardous chemicals: Sodium Sulfide; Sodium Hydroxide
SARA 311/312 MSDS distribution - chemical inventory - hazard identification: Sodium Sulfide: Fire hazard, Immediate (acute) health hazard; Sodium Hydroxide: Immediate (acute) health hazard
Clean Water Act (CWA) 307: No products were found.
Clean Water Act (CWA) 311: Sodium Hydroxide
Clean Air Act (CAA) 112 accidental release prevention: Hydrogen Sulfide
Clean Air Act (CAA) 112 regulated flammable substances: No products were found.
Clean Air Act (CAA) 112 regulated toxic substances: Hydrogen Sulfide

State regulations : Pennsylvania RTK: Hydrogen Sulfide: (environmental hazard, generic environmental hazard); Sodium Hydroxide: (environmental hazard, generic environmental hazard)
Massachusetts RTK: Sodium Sulfide; Hydrogen Sulfide; Sodium Hydroxide
New Jersey: Sodium Sulfide; Hydrogen Sulfide; Sodium Hydroxide
California Prop. 65: No products were found.

Canada

WHMIS (Canada) : Class D-1B: Material causing immediate and serious toxic effects (Toxic).
Class E: Corrosive material
CEPA DSL: Sodium Sulfide; Sodium Hydroxide

Section 16. Other Information

Label requirements : MAY BE FATAL IF INHALED.
HARMFUL IF SWALLOWED.
CAUSES SKIN IRRITATION.
CONTAINS MATERIAL WHICH CAUSES DAMAGE TO THE FOLLOWING ORGANS: LUNGS, RESPIRATORY TRACT, SKIN, EYE, LENS OR CORNEA.

Hazardous Material Information System (U.S.A.) :

Health	3
Fire hazard	0
Physical Hazard	1
Personal protection	

National Fire Protection Association (U.S.A.) :

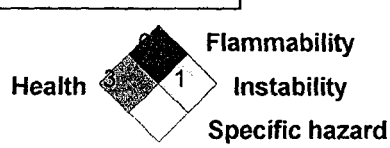

Date of printing : **4/30/2007.**
Date of issue : **4/30/2007.**
Version : **1.01**

Disclaimer

Continued on next page

THIS MATERIAL SAFETY DATA SHEET ("MSDS") WAS PREPARED IN ACCORDANCE WITH 29 CFR 1910.1200 BY VALERO MARKETING & SUPPLY CO., ("VALERO"). VALERO DOES NOT ASSUME ANY LIABILITY ARISING OUT OF PRODUCT USE BY OTHERS. THE INFORMATION, RECOMMENDATIONS, AND SUGGESTIONS PRESENTED IN THIS MSDS ARE BASED UPON TEST RESULTS AND DATA BELIEVED TO BE RELIABLE. THE END USER OF THE PRODUCT HAS THE RESPONSIBILITY FOR EVALUATING THE ADEQUACY OF THE DATA UNDER THE CONDITIONS OF USE, DETERMINING THE SAFETY, TOXICITY, AND SUITABILITY OF THE PRODUCT UNDER THESE CONDITIONS, AND OBTAINING ADDITIONAL OR CLARIFYING INFORMATION WHERE UNCERTAINTY EXISTS. NO GUARANTEE EXPRESSED OR IMPLIED IS MADE AS TO THE EFFECTS OF SUCH USE, THE RESULTS TO BE OBTAINED, OR THE SAFETY AND TOXICITY OF THE PRODUCT IN ANY SPECIFIC APPLICATION. FURTHERMORE, THE INFORMATION HEREIN IS NOT REPRESENTED AS ABSOLUTELY COMPLETE, SINCE IT IS NOT PRACTICABLE TO PROVIDE ALL THE SCIENTIFIC AND STUDY INFORMATION IN THE FORMAT OF THIS DOCUMENT, PLUS ADDITIONAL INFORMATION MAY BE NECESSARY UNDER EXCEPTIONAL CONDITIONS OF USE, OR BECAUSE OF APPLICABLE LAWS OR GOVERNMENT REGULATIONS.

Definitions of Material Safety Data Sheet Terminology

GOVERNMENT AGENCIES AND PRIVATE ASSOCIATIONS

ACGIH - American Conference of Governmental Industrial Hygienists, (private association)
DOT - United States Department of Transportation
EPA - United States Environmental Protection Agency
IARC - International Agency for Research on Cancer, (private association)
NFPA - National Fire Protection Association, (private association)
MSHA - Mine Safety and Health Administration, U.S. Department of Labor
NIOSH - National Institute of Occupational Safety and Health, U.S. Department of Health and Human Services
NTP - National Toxicology Program, (private association)
OSHA - Occupational Safety and Health Administration, U.S. Department of Labor
WHMIS- Workplace Hazardous Material Information System
CSA- Canadian Standards Association

HAZARD AND EXPOSURE INFORMATION

Acute Hazard - An adverse health effect which occurs rapidly as a result of short term exposure.
CAS # - American Chemical Society's Chemical Abstract service registry number which identifies the product and/or ingredients.
Ceiling - The concentration that should not be exceeded during any part of the working exposure
Chronic Hazard - An adverse health effect which generally occurs as a result of long term exposure or short term exposure with delayed health effects and is of long duration
Fire Hazard - A material that poses a physical hazard by being flammable, combustible, phyrophoric or an oxidizer as defined by 29 CFR 1910.1200
Hazard Class - DOT hazard classification
Hazardous Ingredients - Names of ingredients which have been identified as health hazards
IDLH- Immediately Dangerous to Life and Health, the airborne concentration below which a person can escape without respiratory protection and exposure up to 30 minutes, and not suffer debilitating or irreversible health effects. Established by NIOSH.
mg/m3 - Milligrams of contaminant per cubic meter of air, a mass to volume ratio
N/A - Not available or no relevant information found
NA - Not applicable
PEL - OSHA permissible exposure limit; an action level of one half this value may be applicable
ppm - Part per million (one volume of vapor or gas in one million volumes of air)
Pressure Hazard - A material that poses a physical hazard due to the potential of a sudden release of pressure such as explosive or a compressed gas as defined by 29 CFR 1910.1200
Reactive Hazard - A material that poses a physical hazard due to the potential to become unstable reactive, water reactive or that is an organic peroxide as defined by 29 CFR 1910.1200.
STEL - The ACGIH Short-Term Exposure Limit, a 15-minute Time-Weighted Average exposure which should not be exceeded at any time during a workday, even if the 8-hour TWA is less than the TLV.
TLV - ACGIH Threshold Limit Value, represented herein as an 8-hour TWA concentration.
8-hour TWA - The time weighted average concentration for a normal 8-hour workday and a 40-hour workweek, to which nearly all workers may be repeatedly exposed, day after day, without adverse effect.
LD50 – Single dose of a substance that, when administered by a defined route in an animal assay, is expected to cause the

Continued on next page

death of 50% of the defined animal population.
LC50 - The concentration of a substance in air that, when administered by means of inhalation over a specified length of time in an animal assay, is expected to cause the death of 50% of a defined animal population.

SGS

Inspection Report TRANSFER

Subject : GOLDEN CHARLOTTE
Product : SPENT SULFHURIC ACID
Client ref.:

Date : 9/23/2008
Location : Port Arthur, TX / CES ENVIOROMENTAL
Client : CES ENVIOROMENTAL

Our ref.: 115164

Summary of Figures

		Bbls @ 60°F	Gallons @ 60°F	Long Tons	Metric Tonnes	Pounds
Vessel Measurements (GOLDEN CHARLOTTE)						
Total Shore figures transfer	GSV	9,091.93	381,861.06	1,535.968	1,560.617	3,440,568.15
Average API Gravity @ 60°F -0.7	NSV					

Barge's Measurements (CCL 26)

Vessel's figures before loading (OBQ) Free Water	0.00	
Vessel's figures before loading (OBQ) Liquid		
Vessel's figures before loading (OBQ) Non Liquid		
Vessel's figures before loading (OBQ) Total	343.41	14,423.22
Vessel's figures TCV on board after loading	9,447.15	396,780.30
Vessel's figures TCV loaded	9,103.74	382,357.08
Vessel's figures Free Water loaded	0.00	0.00
Vessel's figures GSV loaded	9,103.74	382,357.08

Vessel's Experience Factor
Cargo stowage Cargo tanks no(s): GOLDEN CHARLOTTE[1S, 10P], CCL 26[1, 2, 3)

Letter of Protest

Subject : GOLDEN CHARLOTTE

Samples (see report)

Quality N/A

Comments

Time Log

9/22/2008	0840	* END OF SEA PASSAGE
	0925	* NOTICE OF READINESS TENDERED
	1205	* PILOT ON BOARD
	1340	INSPECTOR NOTIFIED
	1410	* FIRST LINE ASHORE
	1430	* VESSEL ALL FAST
	1436	INSPECTOR ARRIVED-AWAITING COAST GUARD CLEARANCE
	1520	CCL 26 ALONGSIDE
	1648	INSPECTOR ABOARD
	1700	COMMENCE KEY MEETING

SGS

	1707	* NOTICE OF READINESS ACCEPTED
	1718	COMPLETE KEY MEETING
	1718	COMMENCE CARGO INSPECTION
	1745	COMPLETE CARGO INSPECTION
	1810	COMPLETE CARGO CALCULATIONS
	1820	* CARGO HOSE CONNECTED-1X6"
	1915	* COMMENCE DISCHARGE
	1936	INSPECTOR DEPARTED
9/23/2008	0145	* COMPLETE DISCHARGE
	0205	* CARGO HOSE DISCONNECTED
	0400	INSPECTOR NOTIFIED
	0456	INSPECTOR ARRIVED
	0456	COMMENCE ROB INSPECTION
	0510	COMPLETE ROB INSPECTION
	0510	COMPLETE ROB CALCULATIONS-AWAITING VESSEL SAILING, BARGE SHIFT TO DOCK
	0645	BARGE SHIFTED TO DOCK
	0645	COMMENCE CARGO INSPECTION-CCL26
	0730	COMPLETE CARGO INSPECTION-CCL 26
	0745	COMPLETE CARGO CALCULATIONS
	0815	COMPLETE PAPERWORK
	0836	SAMPLES IN SGS LAB
	0848	INSPECTOR DEPARTED

Additional events, Stoppages and Delays

9/22/2008	1436	INSPECTOR ARRIVED-AWAITING COAST GUARD CLEARANCE
9/23/2008	0510	COMPLETE ROB CALCULATIONS-AWAITING VESSEL SAILING, BARGE SHIFT TO DOCK

Darren W. Le Blanc
For SGS Oil, Gas & Chemicals Services
9/24/2008

Shore volume calculated in accordance with: **ASTM D 1250-04**
Vessel volume calculated in accordance with **ASTM D 1250-04**
Procedures as per applicable MPMS Chapter 3.1a, 7, 8.1 or 8.2, 12.1 or 12.2, 17.1, 17.2, 17.4.

Disclaimer

This document is issued by the Company under its General Conditions of Service accessible at http://www.sgs.com/terms_and_conditions.htm. The Client's attention is drawn to the limitation of liability, indemnification and jurisdiction issues defined therein.

Any other holder of this document is advised that information contained hereon reflects the Company's findings at the time of its intervention only and within the limits of Client's instructions, if any. The Company's sole responsibility is to its Client and this document does not exonerate parties to a transaction from exercising all their rights and obligations under the transaction documents. Any unauthorized alteration, forgery or falsification of the content or appearance of this document is unlawful and offenders may be prosecuted to the fullest extent of the law. FIRCC REV. January 2007

SGS

Inspection Report TRANSFER

Subject : CCL 7 to CCL 26
Product : SULFIDIC CAUSTIC
Client ref.:

Date : 3/17/2009
Location : CES, PORT ARTHUR, TX
Client : CES ENVIROMENTAL

Our ref.:134637

Summary of Figures

	Bbls @ 60°F	Gallons @ 60°F
Vessel's Measurements "CCL 7"		
Vessel's figures before Transfer	5963.64	250,473.00
Vessel's figures TOV on board after Transfer	3,509.69	147,407.00
Vessel's figures TOV Delivered	**2,453.95**	**103,066.00**
Vessel's Measurements "CCL 26"		
Vessel's figures before Transfer	828.44	34,794.48
Vessel's figures TOV on board after Transfer	3,229.93	135,657.06
Vessel's figures TOV Received	**2,401.49**	**100,862.58**

Vessel's Experience Factor
Cargo stowage Cargo tanks no(s): CCL 7 [1C, 2C, 3C]
CCL 26 [3C]

Letter of Protest

Subject :

Samples: NOT REQUESTED FROM CLIENT

Quality: NOT REQUESTED FROM CLIENT

Comments

Time Log

3/17/2009	0959	* BARGES ALREADY ON SITE
	1000	INSPECTOR NOTIFIED
	1045	INSPECTOR ARRIVED
	1115	* CARGO HOSE CONNECTED
	1115	COMMENCED BARGE(S) PRIOR INSPECTION
	1140	COMPLETED BARGE(S) PRIOR INSPECTION
	1200	* COMMENCED BARGE TO BARGE TRANSFER
	1345	* COMPLETED BARGE TO BARGE TRANSFER

SGS

1400	COMMENCED BARGE(S) FINAL INSPECTION
1400	* CARGO HOSE DISCONNECTED
1430	COMPLETED BARGE(S) FINAL INSPECTION

Additional events, Stoppages and Delays

Darren W. Le Blanc
for SGS Oil, Gas & Chemicals Services
3/18/2009

Shore volume calculated in accordance with: **TOV**

Vessel volume calculated in accordance with: **TOV**

Procedures as per applicable MPMS Chapter 3.1a, 7, 8.1 or 8.2, 12.1 or 12.2, 17.1, 17.2, 17.4.

Disclaimer

This document is issued by the Company under its General Conditions of Service accessible at http://www.sgs.com/terms_and_conditions.htm. The Client's attention is drawn to the limitation of liability, indemnification and jurisdiction issues defined therein.

Any other holder of this document is advised that information contained hereon reflects the Company's findings at the time of its intervention only and within the limits of Client's instructions, if any. The Company's sole responsibility is to its Client and this document does not exonerate parties to a transaction from exercising all their rights and obligations under the transaction documents. Any unauthorized alteration, forgery or falsification of the content or appearance of this document is unlawful and offenders may be prosecuted to the fullest extent of the law.
FIRCC REV. January 2007

SGS

Procedures as per applicable MPMS Chapter 3.1a, 7, 8.1 or 8.2, 12.1 or 12.2, 17.1, 17.2, 17.4.

DISCLAIMER

This document is issued by the Company under its General Conditions of Service accessible at http://www.sgs.com/terms_and_conditions.htm. The Client's attention is drawn to the limitation of liability, indemnification and jurisdiction issues defined therein.

Any other holder of this document is advised that information contained hereon reflects the Company's findings at the time of its intervention only and within the limits of Client's instructions, if any. The Company's sole responsibility is to its Client and this document does not exonerate parties to a transaction from exercising all their rights and obligations under the transaction documents. Any unauthorized alteration, forgery or falsification of the content or appearance of this document is unlawful and offenders may be prosecuted to the fullest extent of the law. FIRCC REV. January 2007

SGS

Inspection Report Transfer

Subject : Federal Rhine to CCL 7
Product : Oily Residue
Client ref.:

Date : 4/9/2009
Location : Port Arthur, TX / Oxbow
Client : CES Environmental

Our ref.: 137159

Summary of Figures

	Bbls @ 60°F	Gallons @ 60°F
Vessel's Measurements (Federal Rhine)		
Vessel's figures TCV on board before Transfer	89.32	3,751.24
Vessel's figures after Transfer (ROB) Free Water	0.00	
Vessel's figures after Transfer (ROB) Liquid	9.06	
Vessel's figures after Transfer (ROB) Non Liquid	0.00	
Vessel's figures after Transfer (ROB) Total	9.06	380.40
Vessel's figures TCV Transferred	80.26	3,370.84
Vessel's figures Free Water Transferred	0.00	0.00
Vessel's figures GSV discharged	80.26	3,370.84
Vessel's Measurements (CCL 7)		
Vessel's figures TCV on board before Transfer	0.00	0.00
Vessel's figures after Transfer (OBQ) Free Water	0.00	
Vessel's figures after Transfer (OBQ) Liquid	0.00	
Vessel's figures after Transfer (OBQ) Non Liquid	0.00	
Vessel's figures after Transfer (OBQ) Total	115.17	4,837.00
Vessel's figures TCV Transferred	115.17	4,837.00
Vessel's figures Free Water Transferred	0.00	0.00
Vessel's figures GSV Transferred	115.17	4,837.00

Vessel's Experience Factor
Cargo stowage Cargo tanks no(s): **FEDERAL RHINE** [BSOT, SLUDGE], **CCL 7** [1C]

Letter of Protest

VESSEL TO VESSEL DIFFERENCE GREATER THAN 0.05%

Samples See Report

Quality: N/A

Comments

Time Log

4/8/2009	0801	INSPECTOR NOTIFIED
	0850	INSPECTOR ARRIVED
	0930	INSPECTOR ABOARD
	0930	COMMENCE KEY MEETING
	0935	* CCL 7 ALONGSIDE FEDERAL RHINE
	0940	COMPLETE KEY MEETING
	0940	COMMENCE CARGO INSPECTION
	1020	COMPLETE CARGO INSPECTION,VESSEL SAMPLED

SGS

	1025	COMMMENCE INSPECTION,CCL 7
	1040	COMPLETE INSPECTION,CCL 7 AWAITING FLANGE FOR CARGO HOSE
	1545	* CARGO HOSE CONNECTED-1X4"
	1550	* COMMENCE TRANSFER
	1731	INSPECTOR NOTIFIED
	1820	INSPECTOR ARRIVED
	1900	INSPECTOR DEPARTED
	2045	* SUSPEND TRANSFER, VESSEL SHIFT
	2135	* RESUME TRANSFER
	2355	* COMPLETE TRANSFER
4/9/2009	0001	* CARGO HOSE DISCONNECTED
	0010	INSPECTOR ABOARD
	0015	COMMENCE ROB INSPECTION
	0025	COMPLETE ROB INSPECTION
	0035	COMPLETE ROB CALCULATIONS
	0045	COMMENCE CARGO INSPECTION,CCL 7
	0055	COMPLETE CARGO INSPECTION,CCL 7
	0105	COMPLETE CARGO CALCULATIONS
	0110	INSPECTOR DEPARTED

Additional events, Stoppages and Delays

4/8/2009	1040	COMPLETE INSPECTION,CCL 7 AWAITING FLANGE FOR CARGO HOSE

Darren W. Le Blanc
for SGS Oil, Gas & Chemicals Services
4/9/2009

Shore volume calculated in accordance with:
Vessel volume calculated in accordance with:
Procedures as per applicable MPMS Chapter 3.1a, 7, 8.1 or 8.2, 12.1 or 12.2, 17.1, 17.2, 17.4.

Disclaimer

This document is issued by the Company under its General Conditions of Service accessible at http://www.sgs.com/terms_and_conditions.htm. The Client's attention is drawn to the limitation of liability, indemnification and jurisdiction issues defined therein.

Any other holder of this document is advised that information contained hereon reflects the Company's findings at the time of its intervention only and within the limits of Client's instructions, if any. The Company's sole responsibility is to its Client and this document does not exonerate parties to a transaction from exercising all their rights and obligations under the transaction documents. Any unauthorized alteration, forgery or falsification of the content or appearance of this document is unlawful and offenders may be prosecuted to the fullest extent of the law.FIRCC REV. January 2007

CES Environmental Services, Inc.

4904 Griggs Road
Houston, TX 77021
Tel. (713) 676-1460
Fax. (713) 676-1676

Fax

To: Dave LeTourneau

Fax#: 409-892-2119 Pages: 3

From: Steve Stricker

Date: 5-15-09

RE:

This is a sample of the loading reports for barges - if this is acceptable, we will have all by Monday.

CES Environmental Services, Inc.

4904 Griggs Road
Houston, TX 77021
Tel. (713) 676-1460
Fax. (713) 676-1676

Fax

To: Dave LeTourneau

Fax#: 409-892-2119 Pages: 6

From: Steve Stricka

Date: 5-21-09

RE: These are barges unloaded @ PACES
all others appear to be unloaded at
KMTEX

F-1

PORT / TERMINAL: Lake Charles, La / Citgo	OFFICE LAKE CHARLES, LA TEL (337) 625-1455
VESSEL CCL 26 VOY #	INSPECTOR(S): TM
DATE 12/9/2008	SGS FILE 121871
CARGO Spent Caustic	CLIENT REF

SGS

SHORE QUANTITY SUMMARY

Oil Gas & Chemicals Services Division.

☑ AT LOADING ☐ AT TRANSFER ☐ AT DISCHARGE	☑ SHORE TANK (STATIC) ☐ METER (DYNAMIC)
CUSTODY TRANSFER SAMPLE	
☐ API @ 60°F : ☐ R.D. 60°F/60°F ☐ Density Lbs/Gal @	
S&W % VOL:	
SOURCE OF ANALYTICAL DATA:	

	UNITS	TANK 185	TANK/METER	TANK/METER	TANK/METER	TANK/METER
TOTAL CALCULATED VOLUME	BBLS	7935.08				
FREE WATER	BBLS	0.00				
GROSS STANDARD VOLUME	BBLS	7935.08				
S & W VOLUME	BBLS					
(NET) STANDARD VOLUME	BBLS					
WCF TABLE (f)						
GROSS STANDARD WEIGHT	LBS					
S & W WEIGHT	LBS					
(NET) STANDARD WEIGHT	LBS					

	UNITS	TANK/METER	TANK/METER	SHORELINE	TOTAL DELIVERED
TOTAL CALCULATED VOLUME	BBLS				7935.08
FREE WATER	BBLS				0.00
GROSS STANDARD VOLUME	BBLS				7935.08
S & W VOLUME	BBLS				
(NET) STANDARD VOLUME	BBLS				
					☑ GSV ☐ NSV ☐ SV @
GROSS STANDARD WEIGHT	LBS				
S & W WEIGHT	LBS				
(NET) STANDARD WEIGHT	LBS				

STOWAGE O/B VESSEL: 1-3C	
	B/L DATE:
REMARKS QUANTITY CONFIRMED with _____ of _____ with _____ of _____ Date _____ Time _____	QUANTITY CHANGES ☐ YES ☐ NO IF YES STATE REASON

Copyright SGS-OG&C June 1997 - Rev Oct 2003

Services rendered according to published General Terms and Conditions

F-1

Page [illegible] of [illegible]

PORT / TERMINAL: LAKE CHARLE / CITGO	OFFICE LAKE CHARLES, LA TEL (337) 625-1455
VESSEL CCL 26 VOY #	INSPECTOR(S): BELLON
DATE 12/24/2008	SGS FILE 126337
CARGO SPENT CAUSTIC	CLIENT CES Environmental REF TBD

SGS

SHORE QUANTITY SUMMARY

Oil Gas & Chemicals Services Division.

☑ AT LOADING ☐ AT TRANSFER ☐ AT DISCHARGE ☑ SHORE TANK (STATIC) ☐ METER (DYNAMIC)

CUSTODY TRANSFER SAMPLE

☐ API @ 60°F : ☐ R.D. 60°F/60°F ☐ Density Lbs/Gal @

S&W % VOL:

SOURCE OF ANALYTICAL DATA:

	UNITS	TANK 182	TANK 182			
TOTAL CALCULATED VOLUME	BBLS	6436.44	1746.81			
FREE WATER	BBLS	0.00	0.00			
GROSS STANDARD VOLUME	BBLS	6436.44	1746.81			
S & W VOLUME	BBLS					
(NET) STANDARD VOLUME	BBLS					
WCF TABLE (t)						
GROSS STANDARD WEIGHT						
S & W WEIGHT						
(NET) STANDARD WEIGHT						

	UNITS			SHORELINE	TOTAL DELIVERED
TOTAL CALCULATED VOLUME	BBLS				8183.25
FREE WATER	BBLS				0.00
GROSS STANDARD VOLUME	BBLS				8183.25
S & W VOLUME	BBLS				
(NET) STANDARD VOLUME	BBLS				
					☑ GSV ☐ NSV ☐ SV @
GROSS STANDARD WEIGHT					
S & W WEIGHT					
(NET) STANDARD WEIGHT					

STOWAGE O/B VESSEL: 1-3C

B/L DATE:

REMARKS QUANTITY CONFIRMED

with _____ of _____

with _____ of _____

Date _____ Time _____

QUANTITY CHANGES ☐ YES ☐ NO IF YES STATE REASON

CHECKED DATE 12/26/08

Copyright SGS-OG&C June 1997 - Rev Oct 2003

Services rendered according to published General Terms and Conditions

F-2 Page [illegible]

PORT / TERMINAL: LAKE CHARLE / CITGO	OFFICE: LAKE CHARLES, LA TEL: (337) 625-1455
VESSEL: CCL 26 VOY #:	INSPECTOR(S): BELLON
DATE: 12/24/2008	SGS FILE: 126337
CARGO: SPENT CAUSTIC	CLIENT: CES Environmental REF: TBD

SGS

VESSEL QUANTITY SUMMARY

Oil Gas & Chemicals Services Division.

☑ AT LOADING ☐ AT TRANSFER ☐ AT DISCHARGE ☐ CRUDE OIL ☑ PRODUCTS

☑ API @ 60°F : ☐ R.D. 60°F/60°F ☐ Density Lbs/Gal @

S&W % VOL:

SOURCE OF ANALYTICAL DATA: SGS

	VOLUME		WCF (t)	WEIGHT		
	BBLS	U.S. GALS		POUNDS	LONG TONS	METRIC TONS (AIR)
VESSEL'S QUANTITIES	V.E.F. CORRECTED : ☐ YES ☑ NO VEF:					
TOTAL CALCULATED VOL	8340.66	350307.72				
FREE WATER	0.00	0.00				
GROSS STANDARD VOLUME	8340.66	350307.72				
S & W VOLUME						
(NET) STANDARD VOLUME						

☑ OBQ ☐ ROB

LIQUID MATERIAL	0.00	0.00				
NON-LIQUID MATERIAL	0.00	0.00				
FREE WATER	0.00	0.00				
TOTAL	0.00	0.00				

☑ LOADED QUANTITIES ☐ DISCHARGED QUANTITIES

TOTAL CALCULATED VOL	8340.66	350307.72				
FREE WATER	0.00	0.00				
GROSS STANDARD VOLUME	8340.66	350307.72				
S & W VOLUME						
(NET) STANDARD VOLUME						

ARE SLOPS INCLUDED IN CALCULATIONS ☐ YES ☑ NO ☐ NO SLOPS ON BOARD

STOWAGE O/B VESSEL: 1-3C

REMARKS:

CHECKED DATE 12/29/08

Copyright SGS-OG&C 1995 - Rev Oct 2003 Services rendered according to published General Terms and Conditions

F-1 Page 1 of 1

PORT / TERMINAL: Lake Charles, La / Citgo	OFFICE LAKE CHARLES, LA TEL (337) 625-1455
VESSEL CCL 26 VOY #	INSPECTOR(S): C. BUSBY
DATE 7/21/2008	SGS FILE 107438
CARGO SULFIDIC CAUSTIC	CLIENT CES Environmental REF TBD

SGS

SHORE QUANTITY SUMMARY

Oil Gas & Chemicals Services Division.

☑ AT LOADING ☐ AT TRANSFER ☐ AT DISCHARGE	☑ SHORE TANK (STATIC) ☐ METER (DYNAMIC)
CUSTODY TRANSFER SAMPLE	
☐ API @ 60°F : ☐ R.D. 60°F/60°F ☐ Density Lbs/Gal @	
S&W % VOL:	
SOURCE OF ANALYTICAL DATA:	

	UNITS	ST 182	S/T 182			
TOTAL CALCULATED VOLUME	BBLS	6010.42	2286.10			
FREE WATER	BBLS	0.00	0.00			
GROSS STANDARD VOLUME	BBLS	6010.42	2286.10			
S & W VOLUME	BBLS					
(NET) STANDARD VOLUME	BBLS					
WCF TABLE (t 8)						
GROSS STANDARD WEIGHT						
S & W WEIGHT						
(NET) STANDARD WEIGHT						

	UNITS			SHORELINE	TOTAL DELIVERED
TOTAL CALCULATED VOLUME	BBLS				8296.52
FREE WATER	BBLS				0.00
GROSS STANDARD VOLUME	BBLS				8296.52
S & W VOLUME	BBLS				
(NET) STANDARD VOLUME	BBLS				
					☑ GSV ☐ NSV ☐ SV @
GROSS STANDARD WEIGHT					
S & W WEIGHT					
(NET) STANDARD WEIGHT					

STOWAGE O/B VESSEL: 1-3 CENTER CARGO TANKS

B/L DATE:

REMARKS	QUANTITY CONFIRMED	QUANTITY CHANGES	YES	NO	IF YES STATE REASON
with _____	of _____				
with _____	of _____				
Date _____	Time _____				

CHECKED BY 7-24-08

Copyright SGS-OG&C June 1997 - Rev Oct 2003

Services rendered according to published General Terms and Conditions

F-14

PORT / TERMINAL: Lake Charles, La / Citgo	OFFICE: LAKE CHARLES, LA TEL: (337) 625-1455
VESSEL: CCL 26 VOY #:	INSPECTOR(S): C. BUSBY
DATE: 7/21/2008	SGS FILE: 107438
CARGO: SULFIDIC CAUSTIC	CLIENT: CES Environmental REF: TBD

SGS

CARGO QUANTITY OPTION

Oil Gas & Chemicals Services Division.

☑ AT LOADING ☐ AT TRANSFER ☐ AT DISCHARGE | ☐ RESIDUAL ☐ CLEAN PRODUCTS ☑ CHEMICALS/GASES

ABOVE VESSEL WILL ☑ LOAD ☐ DISCHARGE ☑ AT THIS TERMINAL ☐ AT (SPECIFY) :

AS PER ☐ CHARTER PARTY ☐ AMENDED C/P ☑ PRINCIPAL'S INSTRUCTIONS ☐ OTHER (SPECIFY)

FOLLOWING QUANTITY(S) OF SULFIDIC CAUSTIC

( ) ☐ LT ☐ MT ☐ POUNDS ☑ OTHER (SPECIFY) TO 9-6 DRAFT

OR : ( ) ☐ BBLS ☐ M³ ☐ OTHER AT ☐ STD. TEMP ☐ OBSERV. TEMP

THIS QUANTITY(S) IS SPECIFIED AS :

☐ MINIMUM ☐ MAXIMUM ☐ MIN/MAX ☐ PLUS OR MINUS ☑ OTHER (SPECIFY) APPROXIMATELY

*PLUS OR MINUS %" IS THE OPTION OF ☐ VESSEL ☐ TERMINAL ☐ CLIENT

*PLUS OR MINUS %" IS OPTED FOR BY ☐ VESSEL ☐ TERMINAL ☐ CLIENT

THE ABOVE QUANTITY(S) :
- WILL BE DETERMINED BY ☑ SHIP'S STOP ☐ SHORE STOP
- WILL BE DELIVERED / DISCHARGED FROM TANK(S) ST 182
- AND RECEIVED / LOADED INTO TANK(S) 1-3 C

VESSEL'S CO-MINGLING ACCEPTABLE TO OUR PRINCIPAL ☐ YES ☐ NO

CARGO REQUIRES ☐ SEGREGATION ☐ SEPARATION ☐ VOLUMETRIC BLENDING

(SIGNATURES) VESSEL'S STAFF :	DATE :	TIME :
TERMINAL REPRESENTATIVE :	DATE :	TIME :
INSPECTOR : C. BUSBY	DATE : 7/21/2008	TIME : 9:35

ARE STOP GAUGES :	- TAKEN BY INSPECTOR	☐ YES	☑ NO
	-TAKEN BY TERMINAL / VESSEL	☑ YES	☐ NO
	- WITNESSED BY INSPECTOR	☐ YES	☑ NO

REMARKS :

NOTE: (1) WE CALCULATE AND CHECK ON STOP GAUGE MEASUREMENTS WHEN REQUIRED BY OUR CLIENTS; HOWEVER, VESSEL AND TERMINAL EMPLOYEES ARE SOLELY RESPONSIBLE FOR OBSERVATION OF STOP GAUGES, VALVE SETTING AND PUMPING INTO AND OUT OF THE DESIGNATED TANKS.

(2) OUR STAFF IS AVAILABLE TO ADVISE IN BLENDING OPERATIONS. VOLUMETRIC OR WEIGHT COMPOSITES CAN BE PREPARED FROM COMPONENTS AND TESTED IN OUR LABORATORIES. HOWEVER, DUE TO THE INHERENT DIFFICULTY IN ACHIEVING A HOMOGENEOUS STABLE BLEND IN TANKS AND SAMPLES, SGS CANNOT ACCEPT ANY RESPONSIBILITY.

CHECKED DATE 7-28-08

Copyright SGS-OG&C 1995 - Rev Oct 2003 Services rendered according to published General Terms and Conditions

F-14 Page 1 of 1

PORT / TERMINAL: Lake Charles, La / Citgo	OFFICE: LAKE CHARLES, LA TEL: (337) 625-1455
VESSEL: CCL 7 VOY #:	INSPECTOR(S): Mitchell Heuring
DATE: 3/21/2009	SGS FILE: 134636
CARGO: Spent Caustic	CLIENT: CES Environmental Servi REF: TBD

SGS

CARGO QUANTITY OPTION

Oil Gas & Chemicals Services Division.

☑ AT LOADING ☐ AT TRANSFER ☐ AT DISCHARGE ☐ RESIDUAL ☐ CLEAN PRODUCTS ☑ CHEMICALS/GASES

ABOVE VESSEL WILL ☑ LOAD ☐ DISCHARGE ☑ AT THIS TERMINAL ☐ AT (SPECIFY) :

AS PER ☐ CHARTER PARTY ☐ AMENDED C/P ☑ PRINCIPAL'S INSTRUCTIONS ☐ OTHER (SPECIFY)

FOLLOWING QUANTITY(S) OF SPENT CAUSTIC

( ) ☐ LT ☐ MT ☐ POUNDS ☑ OTHER (SPECIFY) 9' 6" DRAFT

OR : ( ) ☐ BBLS ☐ M³ ☐ OTHER AT ☐ STD. TEMP ☐ OBSERV. TEMP

THIS QUANTITY(S) IS SPECIFIED AS :

☐ MINIMUM ☐ MAXIMUM ☐ MIN/MAX ☐ PLUS OR MINUS ☐ OTHER (SPECIFY)

*PLUS OR MINUS %" IS THE OPTION OF ☐ VESSEL ☐ TERMINAL ☐ CLIENT

*PLUS OR MINUS %" IS OPTED FOR BY ☐ VESSEL ☐ TERMINAL ☐ CLIENT

THE ABOVE QUANTITY(S) :
- WILL BE DETERMINED BY ☑ SHIP'S STOP ☐ SHORE STOP
- WILL BE DELIVERED / DISCHARGED FROM TANK(S) SHORE TANK 182
- AND RECEIVED / LOADED INTO TANK(S) 1-3 CENTERS

VESSEL'S CO-MINGLING ACCEPTABLE TO OUR PRINCIPAL ☐ YES ☐ NO

CARGO REQUIRES ☐ SEGREGATION ☐ SEPARATION ☐ VOLUMETRIC BLENDING

(SIGNATURES) VESSEL'S STAFF :	DATE :	TIME :
TERMINAL REPRESENTATIVE :	DATE :	TIME :
INSPECTOR : Mitchell Heuring	DATE : 3/21/2009	TIME : 11:15

ARE STOP GAUGES :	- TAKEN BY INSPECTOR	☐ YES	☐ NO
	-TAKEN BY TERMINAL / VESSEL	☐ YES	☐ NO
	- WITNESSED BY INSPECTOR	☐ YES	☐ NO

REMARKS :

NOTE: (1) WE CALCULATE AND CHECK ON STOP GAUGE MEASUREMENTS WHEN REQUIRED BY OUR CLIENTS; HOWEVER, VESSEL AND TERMINAL EMPLOYEES ARE SOLELY RESPONSIBLE FOR OBSERVATION OF STOP GAUGES, VALVE SETTING AND PUMPING INTO AND OUT OF THE DESIGNATED TANKS.

(2) OUR STAFF IS AVAILABLE TO ADVISE IN BLENDING OPERATIONS. VOLUMETRIC OR WEIGHT COMPOSITES CAN BE PREPARED FROM COMPONENTS AND TESTED IN OUR LABORATORIES. HOWEVER, DUE TO THE INHERENT DIFFICULTY IN ACHIEVING A HOMOGENEOUS STABLE BLEND IN TANKS AND SAMPLES, SGS CANNOT ACCEPT ANY RESPONSIBILITY.

Copyright SGS-OG&C 1995 - Rev Oct 2003 Services rendered according to published General Terms and Conditions

CHECKED DATE 3/23/09

F-14 Page

PORT / TERMINAL: Lake Charles, La / Citgo	OFFICE: LAKE CHARLES TEL: (337) 625-1455
VESSEL: CCL 7 VOY #:	INSPECTOR(S): T. MC DONALD
DATE: 3/30/2009	SGS FILE: 135919
CARGO: SPENT CAUSTIC	CLIENT: CES Environmental REF: TBD

SGS

CARGO QUANTITY OPTION

Oil Gas & Chemicals Services Division.

☑ AT LOADING ☐ AT TRANSFER ☐ AT DISCHARGE | ☐ RESIDUAL ☐ CLEAN PRODUCTS ☐ CHEMICALS/GASES

ABOVE VESSEL WILL ☑ LOAD ☐ DISCHARGE ☑ AT THIS TERMINAL ☐ AT (SPECIFY) :

AS PER ☐ CHARTER PARTY ☐ AMENDED C/P ☑ PRINCIPAL'S INSTRUCTIONS ☐ OTHER (SPECIFY)

FOLLOWING QUANTITY(S) OF SPENT CAUSTIC

( ) ☐ LT ☐ MT ☐ POUNDS ☐ OTHER (SPECIFY) 9' 6" DRAFTTIM

OR : ( ) ☐ BBLS ☐ M³ ☐ OTHER AT ☐ STD. TEMP ☐ OBSERV. TEMP

THIS QUANTITY(S) IS SPECIFIED AS :

☐ MINIMUM ☐ MAXIMUM ☐ MIN/MAX ☐ PLUS OR MINUS ☐ OTHER (SPECIFY)

*PLUS OR MINUS %" IS THE OPTION OF ☐ VESSEL ☐ TERMINAL ☐ CLIENT

*PLUS OR MINUS %" IS OPTED FOR BY ☐ VESSEL ☐ TERMINAL ☐ CLIENT

THE ABOVE QUANTITY(S) : - WILL BE DETERMINED BY ☐ SHIP'S STOP ☐ SHORE STOP

- WILL BE DELIVERED / DISCHARGED FROM TANK(S) _____

- AND RECEIVED / LOADED INTO TANK(S) _____

VESSEL'S CO-MINGLING ACCEPTABLE TO OUR PRINCIPAL ☐ YES ☐ NO

CARGO REQUIRES ☐ SEGREGATION ☐ SEPARATION ☐ VOLUMETRIC BLENDING

(SIGNATURES)	VESSEL'S STAFF :	DATE :	TIME :
	TERMINAL REPRESENTATIVE :	DATE :	TIME :
	INSPECTOR : TIM MC DONALD	DATE : 3/31/2009	TIME : 15:35

ARE STOP GAUGES :	- TAKEN BY INSPECTOR	☐ YES	☐ NO
	-TAKEN BY TERMINAL / VESSEL	☐ YES	☐ NO
	- WITNESSED BY INSPECTOR	☐ YES	☐ NO

REMARKS :

NOTE: (1) WE CALCULATE AND CHECK ON STOP GAUGE MEASUREMENTS WHEN REQUIRED BY OUR CLIENTS; HOWEVER, VESSEL AND TERMINAL EMPLOYEES ARE SOLELY RESPONSIBLE FOR OBSERVATION OF STOP GAUGES, VALVE SETTING AND PUMPING INTO AND OUT OF THE DESIGNATED TANKS.

(2) OUR STAFF IS AVAILABLE TO ADVISE IN BLENDING OPERATIONS. VOLUMETRIC OR WEIGHT COMPOSITES CAN BE PREPARED FROM COMPONENTS AND TESTED IN OUR LABORATORIES. HOWEVER, DUE TO THE INHERENT DIFFICULTY IN ACHIEVING A HOMOGENEOUS STABLE BLEND IN TANKS AND SAMPLES, SGS CANNOT ACCEPT ANY RESPONSIBILITY.

Copyright SGS-OG&C 1995 - Rev Oct 2003 Services rendered according to published General Terms and Conditions

CHECKED DATE 04/13/09

F-14 Page 1 of 1

PORT / TERMINAL: Lake Charles, La / Citgo	OFFICE: LAKE CHARLES, LA TEL: (337) 625-1455
VESSEL: CCL 26 VOY #:	INSPECTOR(S): C. BUSBY
DATE: 8/26/2008	SGS FILE: 112532
CARGO: Spent Caustic	CLIENT: CITGO/CES REF:

SGS

CARGO QUANTITY OPTION

Oil Gas & Chemicals Services Division.

☑ AT LOADING ☐ AT TRANSFER ☐ AT DISCHARGE ☐ RESIDUAL ☐ CLEAN PRODUCTS ☐ CHEMICALS/GASES

ABOVE VESSEL WILL ☑ LOAD ☐ DISCHARGE ☑ AT THIS TERMINAL ☐ AT (SPECIFY) :

AS PER ☐ CHARTER PARTY ☐ AMENDED C/P ☑ PRINCIPAL'S INSTRUCTIONS ☐ OTHER (SPECIFY)

FOLLOWING QUANTITY(S) OF SPENT CAUSTIC

( ) ☐ LT ☐ MT ☐ POUNDS ☑ OTHER (SPECIFY) 9-6 DRAFT

OR : ( ) ☐ BBLS ☐ M³ ☐ OTHER AT ☐ STD. TEMP ☑ OBSERV. TEMP

THIS QUANTITY(S) IS SPECIFIED AS :

☐ MINIMUM ☐ MAXIMUM ☐ MIN/MAX ☐ PLUS OR MINUS ☑ OTHER (SPECIFY) APPROXIMATELY

*PLUS OR MINUS %" IS THE OPTION OF ☐ VESSEL ☐ TERMINAL ☐ CLIENT

*PLUS OR MINUS %" IS OPTED FOR BY ☐ VESSEL ☐ TERMINAL ☐ CLIENT

THE ABOVE QUANTITY(S) :
- WILL BE DETERMINED BY ☑ SHIP'S STOP ☐ SHORE STOP
- WILL BE DELIVERED / DISCHARGED FROM TANK(S) ST 182
- AND RECEIVED / LOADED INTO TANK(S) 1-3 CENTER CARGO TANKS

VESSEL'S CO-MINGLING ACCEPTABLE TO OUR PRINCIPAL ☐ YES ☐ NO

CARGO REQUIRES ☐ SEGREGATION ☐ SEPARATION ☐ VOLUMETRIC BLENDING

(SIGNATURES) VESSEL'S STAFF :	DATE :	TIME :
TERMINAL REPRESENTATIVE :	DATE :	TIME :
INSPECTOR : C. BUSBY	DATE : 8/26/2008	TIME : 9:45

ARE STOP GAUGES :	- TAKEN BY INSPECTOR	☐ YES	☑ NO
	-TAKEN BY TERMINAL / VESSEL	☐ YES	☑ NO
	- WITNESSED BY INSPECTOR	☐ YES	☑ NO

REMARKS :

NOTE: (1) WE CALCULATE AND CHECK ON STOP GAUGE MEASUREMENTS WHEN REQUIRED BY OUR CLIENTS; HOWEVER, VESSEL AND TERMINAL EMPLOYEES ARE SOLELY RESPONSIBLE FOR OBSERVATION OF STOP GAUGES, VALVE SETTING AND PUMPING INTO AND OUT OF THE DESIGNATED TANKS.

(2) OUR STAFF IS AVAILABLE TO ADVISE IN BLENDING OPERATIONS. VOLUMETRIC OR WEIGHT COMPOSITES CAN BE PREPARED FROM COMPONENTS AND TESTED IN OUR LABORATORIES. HOWEVER, DUE TO THE INHERENT DIFFICULTY IN ACHIEVING A HOMOGENEOUS STABLE BLEND IN TANKS AND SAMPLES, SGS CANNOT ACCEPT ANY RESPONSIBILITY.

Copyright SGS-OG&C 1995 - Rev Oct 2003 Services rendered according to published General Terms and Conditions

F-14

PORT / TERMINAL: Lake Charles, La / Citgo	OFFICE: LAKE CHARLES, LA TEL: (337) 625-1455
VESSEL: CCL 26 VOY #:	INSPECTOR(S): mike elliott
DATE: 6/8/2008	SGS FILE: 101266
CARGO: SULFIDIC CAUSTIC	CLIENT: CES ENVIROMENTAL REF:

SGS

CARGO QUANTITY OPTION

Oil Gas & Chemicals Services Division.

☑ AT LOADING ☐ AT TRANSFER ☐ AT DISCHARGE ☐ RESIDUALS ☐ CLEAN PRODUCTS ☐ CHEMICALS/GASES

ABOVE VESSEL WILL ☐ LOAD ☐ DISCHARGE ☐ AT THIS TERMINAL ☐ AT (SPECIFY) :

AS PER ☐ CHARTER PARTY ☐ AMENDED C/P ☐ PRINCIPAL'S INSTRUCTIONS ☐ OTHER (SPECIFY)

FOLLOWING QUANTITY(S) OF SULFIDIC CAUSTIC

( ) ☐ LT ☐ MT ☐ POUNDS ☐ OTHER (SPECIFY) 9-6 DRAFT

OR : ( ) ☐ BBLS ☐ M³ ☐ OTHER AT ☐ STD. TEMP ☐ OBSERV. TEMP

THIS QUANTITY(S) IS SPECIFIED AS :

☐ MINIMUM ☐ MAXIMUM ☐ MIN/MAX ☐ PLUS OR MINUS % ☐ OTHER (SPECIFY)

*PLUS OR MINUS %" IS THE OPTION OF ☐ VESSEL ☐ TERMINAL ☐ CLIENT

*PLUS OR MINUS %" IS OPTED FOR BY ☐ VESSEL ☐ TERMINAL ☐ CLIENT

THE ABOVE QUANTITY(S) : - WILL BE DETERMINED BY ☐ SHIP'S STOP ☐ SHORE STOP

- WILL BE DELIVERED / DISCHARGED FROM TANK(S) ACTIVE S/T 182

- AND RECEIVED / LOADED INTO TANK(S) 1-3 CENTER

VESSEL'S CO-MINGLING ACCEPTABLE TO OUR PRINCIPAL ☐ YES ☐ NO

CARGO REQUIRES ☐ SEGREGATION ☐ SEPARATION ☐ VOLUMETRIC BLENDING

(SIGNATURES) VESSEL'S STAFF :	DATE :	TIME :
TERMINAL REPRESENTATIVE :	DATE :	TIME :
INSPECTOR : MIKE ELLIOT	DATE : 6/9/2008	TIME : 22:30

ARE STOP GAUGES :	- TAKEN BY INSPECTOR	☐ YES	☐ NO
	-TAKEN BY TERMINAL / VESSEL	☐ YES	☐ NO
	- WITNESSED BY INSPECTOR	☐ YES	☐ NO

REMARKS :

NOTE: (1) WE CALCULATE AND CHECK ON STOP GAUGE MEASUREMENTS WHEN REQUIRED BY OUR CLIENTS; HOWEVER, VESSEL AND TERMINAL EMPLOYEES ARE SOLELY RESPONSIBLE FOR OBSERVATION OF STOP GAUGES, VALVE SETTING AND PUMPING INTO AND OUT OF THE DESIGNATED TANKS.

(2) OUR STAFF IS AVAILABLE TO ADVISE IN BLENDING OPERATIONS. VOLUMETRIC OR WEIGHT COMPOSITES CAN BE PREPARED FROM COMPONENTS AND TESTED IN OUR LABORATORIES. HOWEVER, DUE TO THE INHERENT DIFFICULTY IN ACHIEVING A HOMOGENEOUS STABLE BLEND IN TANKS AND SAMPLES, SGS CANNOT ACCEPT ANY RESPONSIBILITY.

CHECKED DATE 6/10/08

Copyright SGS-OG&C 1995 - Rev Oct 2003 Services rendered according to published General Terms and Conditions

F-14

PORT / TERMINAL: Lake Charles, LA / CITGO	OFFICE: Lake Charles, LA TEL: 337-625-1455
VESSEL: CCL 7 VOY #:	INSPECTOR(S): JOE BUSBY
DATE: 4/9/2009	SGS FILE: 137178
CARGO: SPENT CAUSTIC	CLIENT: CES ENVIROMENTAL REF: TBD

SGS

CARGO QUANTITY OPTION

Oil Gas & Chemicals Services Division.

☑ AT LOADING ☐ AT TRANSFER ☐ AT DISCHARGE ☐ RESIDUAL ☐ CLEAN PRODUCTS ☑ CHEMICALS/GASES

ABOVE VESSEL WILL ☑ LOAD ☐ DISCHARGE ☐ AT THIS TERMINAL ☐ AT (SPECIFY) :

AS PER ☐ CHARTER PARTY ☐ AMENDED C/P ☑ PRINCIPAL'S INSTRUCTIONS ☐ OTHER (SPECIFY)

FOLLOWING QUANTITY(S) OF SPENT CAUSTIC

( ) ☐ LT ☐ MT ☐ POUNDS ☑ OTHER (SPECIFY) 9-6 DRAFT

OR : ( ) ☐ BBLS ☐ M³ ☑ OTHER AT ☐ STD. TEMP ☐ OBSERV. TEMP

THIS QUANTITY(S) IS SPECIFIED AS :

☐ MINIMUM ☐ MAXIMUM ☐ MIN/MAX ☐ PLUS OR MINUS ☑ OTHER (SPECIFY) LTD

PLUS OR MINUS % IS THE OPTION OF ☐ VESSEL ☐ TERMINAL ☐ CLIENT

PLUS OR MINUS % IS OPTED FOR BY ☐ VESSEL ☐ TERMINAL ☐ CLIENT

THE ABOVE QUANTITY(S) :
- WILL BE DETERMINED BY ☑ SHIP'S STOP ☐ SHORE STOP
- WILL BE DELIVERED / DISCHARGED FROM TANK(S) SHORE TANK 182
- AND RECEIVED / LOADED INTO TANK(S) 1-3 C

VESSEL'S CO-MINGLING ACCEPTABLE TO OUR PRINCIPAL ☐ YES ☐ NO

CARGO REQUIRES ☐ SEGREGATION ☐ SEPARATION ☐ VOLUMETRIC BLENDING

(SIGNATURES)	VESSEL'S STAFF :	DATE :	TIME :
	TERMINAL REPRESENTATIVE :	DATE :	TIME :
	INSPECTOR : JOE BUSBY	DATE : 4/9/2009	TIME : 16:15

ARE STOP GAUGES :			
	- TAKEN BY INSPECTOR	☐ YES	☐ NO
	-TAKEN BY TERMINAL / VESSEL	☑ YES	☐ NO
	- WITNESSED BY INSPECTOR	☐ YES	☐ NO

REMARKS : LOAD TO 9-6 DRAFT

NOTE: (1) WE CALCULATE AND CHECK ON STOP GAUGE MEASUREMENTS WHEN REQUIRED BY OUR CLIENTS; HOWEVER, VESSEL AND TERMINAL EMPLOYEES ARE SOLELY RESPONSIBLE FOR OBSERVATION OF STOP GAUGES, VALVE SETTING AND PUMPING INTO AND OUT OF THE DESIGNATED TANKS.

(2) OUR STAFF IS AVAILABLE TO ADVISE IN BLENDING OPERATIONS. VOLUMETRIC OR WEIGHT COMPOSITES CAN BE PREPARED FROM COMPONENTS AND TESTED IN OUR LABORATORIES. HOWEVER, DUE TO THE INHERENT DIFFICULTY IN ACHIEVING A HOMOGENEOUS STABLE BLEND IN TANKS AND SAMPLES, SGS CANNOT ACCEPT ANY RESPONSIBILITY.

CHECKED DATE 4/14/05 RD

Copyright SGS-OG&C 1995 - Rev Oct 2003 Services rendered according to published General Terms and Conditions

SGS

To: JENNY RUST
SGS REF NO: 112916

CES Environmental
REF #

SUMMARY OF FINDINGS

OPERATION

DISCHARGE FROM THE **"CCL 26"** TO SHORE TANK(S) 607 AT KMTEX, PORT ARTHUR, TX ON **9/9/2008,** OF A CARGO DESCRIBED AS **SULFIDIC CAUSTIC**

QUANTITY Discharged on 9/9/08

		DELIVERED (1)	**RECEIVED (2)**	DIFFERENCE	PERCENT
GSV	BARRELS	8,758.68	**8,847.70**	-89.02	1.01
	U.S. GALLONS	367,864.56	**371,603.40**	-3,738.84	1.01

1. Delivered quantity based on barge figures
2. **Received quantity based on shore tank 607**
3. Arrival: 9,107.60 GSV BBLS
4. ROB: 348.92 GSV BBLS

TIME LOG

9/8/2008	16:00	BARGE ON SITE
	18:45	INSPECTOR NOTIFIED
	19:40	INSPECTOR ARRIVED
	20:00	INSPECTOR ON BOARD
	20:05	COMMENCE BARGE PRE-INSPECTION
	20:20	COMPLETE BARGE PRE-INSPECTION
	20:40	CARGO HOSE CONNECTED
	20:55	SHORETANK # 607 GAUGED OPEN
	21:20	COMMENCE DISCHARGE
9/9/2008	01:30	COMPLETE DISCHARGE
	02:35	INSPECTOR NOTIFIED
	03:00	INSPECTOR ARRIVED
	03:10	COMMENCE BARGE FINAL INSPECTION
	03:20	COMPLETE BARGE FINAL INSPECTION
	03:50	SHORETANK # 607 GAUGED CLOSED
	04:30	INSPECTOR DEPARTED

Darren W. Le Blanc
Date: 9/10/2008

Shore volume calculated in accordance with: **TOV**
Vessel volume calculated in accordance with: **TOV**

SGS

Definition of Terms as per MPMS Chapter 1.
Procedures as per applicable MPMS Chapter 3.1a, 7, 8.1 or 8.2, 12.1 or 12.2, 17.1, 17.2, 17.4.

DISCLAIMER

This document is issued by the Company under its General Conditions of Service accessible at http://www.sgs.com/terms_and_conditions.htm. The Client's attention is drawn to the limitation of liability, indemnification and jurisdiction issues defined therein.

Any other holder of this document is advised that information contained hereon reflects the Company's findings at the time of its intervention only and within the limits of Client's instructions, if any. The Company's sole responsibility is to its Client and this document does not exonerate parties to a transaction from exercising all their rights and obligations under the transaction documents. Any unauthorized alteration, forgery or falsification of the content or appearance of this document is unlawful and offenders may be prosecuted to the fullest extent of the law. FIRCC REV. January 2007

SGS

To: JENNY RUST
SGS REF NO: 112916

CES Environmental
REF #

SUMMARY OF FINDINGS

OPERATION

DISCHARGE FROM THE **"CCL 26"** TO SHORE TANK(S) 607 AT KMTEX, PORT ARTHUR, TX ON **9/9/2008**, OF A CARGO DESCRIBED AS **SULFIDIC CAUSTIC**

QUANTITY Discharged on 9/9/08

		DELIVERED (1)	**RECEIVED (2)**	DIFFERENCE	PERCENT
GSV	BARRELS	8,758.68	**8,847.70**	-89.02	1.01
	U.S. GALLONS	367,864.56	**371,603.40**	-3,738.84	1.01

1. Delivered quantity based on barge figures
2. **Received quantity based on shore tank 607**
3. Arrival: 9,107.60 GSV BBLS
4. ROB: 348.92 GSV BBLS

TIME LOG

9/8/2008	16:00	BARGE ON SITE
	18:45	INSPECTOR NOTIFIED
	19:40	INSPECTOR ARRIVED
	20:00	INSPECTOR ON BOARD
	20:05	COMMENCE BARGE PRE-INSPECTION
	20:20	COMPLETE BARGE PRE-INSPECTION
	20:40	CARGO HOSE CONNECTED
	20:55	SHORETANK # 607 GAUGED OPEN
	21:20	COMMENCE DISCHARGE
9/9/2008	01:30	COMPLETE DISCHARGE
	02:35	INSPECTOR NOTIFIED
	03:00	INSPECTOR ARRIVED
	03:10	COMMENCE BARGE FINAL INSPECTION
	03:20	COMPLETE BARGE FINAL INSPECTION
	03:50	SHORETANK # 607 GAUGED CLOSED
	04:30	INSPECTOR DEPARTED

Darren W. Le Blanc
Date: 9/10/2008

Shore volume calculated in accordance with: **TOV**
Vessel volume calculated in accordance with: **TOV**

SGS

Definition of Terms as per MPMS Chapter 1.
Procedures as per applicable MPMS Chapter 3.1a, 7, 8.1 or 8.2, 12.1 or 12.2, 17.1, 17.2, 17.4.

DISCLAIMER

This document is issued by the Company under its General Conditions of Service accessible at http://www.sgs.com/terms_and_conditions.htm. The Client's attention is drawn to the limitation of liability, indemnification and jurisdiction issues defined therein.

Any other holder of this document is advised that information contained hereon reflects the Company's findings at the time of its intervention only and within the limits of Client's instructions, if any. The Company's sole responsibility is to its Client and this document does not exonerate parties to a transaction from exercising all their rights and obligations under the transaction documents. Any unauthorized alteration, forgery or falsification of the content or appearance of this document is unlawful and offenders may be prosecuted to the fullest extent of the law. FIRCC REV. January 2007

SGS

400gal - CCL7 - unload
- 30 gal + CCL2 100gallons
+ 30 gal

To: JENNY RUST
SGS Ref. No: 124899

CES ENVIRONMENTAL
Your Ref. No:

SUMMARY OF FINDINGS

OPERATION

LOADING FROM 606, 501 AT KMTEX, PORT ARTHUR, TX ON 12/13/2008 OF A CARGO DESCRIBED AS SPENT CAUSTIC

QUANTITY

	DELIVERED	RECEIVED	DIFFERENCE	PERCENT
U.S. BARRELS	6,543.06	6,367.55	175.51	2.68
U.S. GALLONS	274,808.45	267,437.00	7,371.45	2.68

T
O
V

1. **Delivered quantity based on SHORE MEASUREMENTS**
2. Received quantity based on BARGE MEASUREMENTS
3. CCL-7 OBQ: 1,082.81 U.S. Barrels - ~~water~~ left on barge
4. CCL-7 DEPARTURE: 7,450.36 U.S. Barrels - Discrepancy

QUALITY: SAMPLES DELIVERD TO CES, PTA, TX

TIME LOG

12/12/2008	13:25	INSPECTOR NOTIFIED
	14:00	ARRIVED AT OFFICE
	14:00	BARGE ARRIVED
	14:30	ARRIVED AT KMTEX
	14:30	BARGE DOCKED
	14:40	COMMENCED BARGE PRIOR INSPECTION
	15:00	COMPLETED BARGE PRIOR INSPECTION
	15:00	CARGO HOSE CONNECTED
	17:00	GAUGED S/T 164 (TERMINAL XFER CARGO TO ANOTHER S/T PRIOR TO LOADING)
	17:15	GAUGED S/T 606 OPEN
	17:30	GAUGED S/T 501 OPEN
	17:50	INSPECTOR DEPARTED
	18:40	COMMENCED LOADING
12/13/2008	00:30	INSPECTOR NOTIFIED
	01:30	ARRIVED AT KMTEX
	01:55	COMPLETED LOADING; BARGE STOP
	02:10	GAUGED S/T 164
	02:20	GAUGED S/T 606 CLOSE
	02:30	CARGO HOSE DISCONNECTED
	02:35	GAUGED S/T 501 CLOSE
	02:50	COMMENCED BARGE FINAL INSPECTION
	03:20	COMPLETED BARGE FINAL INSPECTION
	03:30	COMMENCED CALCULATIONS
	04:00	COMPLETED CALCULATIONS

SGS

04:30 SAMPLES DELIVERED TO CES
04:45 INSPECTOR DEPARTED

Darren W. Le Blanc
Date: 12/15/2008

Shore volume calculated in accordance with: **TOV**
Vessel volume calculated in accordance with: **TOV**
Definition of Terms as per MPMS Chapter 1.
Procedures as per applicable MPMS Chapter 3.1a, 7, 8.1 or 8.2, 12.1 or 12.2, 17.1, 17.2, 17.4.

DISCLAIMER

This document is issued by the Company under its General Conditions of Service accessible at http://www.sgs.com/terms_and_conditions.htm. The Client's attention is drawn to the limitation of liability, indemnification and jurisdiction issues defined therein.

Any other holder of this document is advised that information contained hereon reflects the Company's findings at the time of its intervention only and within the limits of Client's instructions, if any. The Company's sole responsibility is to its Client and this document does not exonerate parties to a transaction from exercising all their rights and obligations under the transaction documents. Any unauthorized alteration, forgery or falsification of the content or appearance of this document is unlawful and offenders may be prosecuted to the fullest extent of the law. FIRCC REV. January 2007

SGS

To: JENNY RUST
SGS Ref. No: 124899

CES ENVIRONMENTAL
Your Ref. No:

SUMMARY OF FINDINGS

OPERATION

LOADING FROM 606, 501 AT KMTEX, PORT ARTHUR, TX ON **12/13/2008** OF A CARGO DESCRIBED AS **SPENT CAUSTIC**

QUANTITY	DELIVERED	RECEIVED	DIFFERENCE	PERCENT
U.S. BARRELS	6,543.06	6,367.55	175.51	2.68
U.S. GALLONS	274,808.45	267,437.00	7,371.45	2.68

T
O
V

1. Delivered quantity based on SHORE MEASUREMENTS
2. Received quantity based on BARGE MEASUREMENTS
3. CCL-7 OBQ: 1,082.81 U.S. Barrels
4. CCL-7 DEPARTURE: 7,450.36 U.S. Barrels

QUALITY: SAMPLES DELIVERD TO CES, PTA, TX

TIME LOG

12/12/2008	13:25	INSPECTOR NOTIFIED
	14:00	ARRIVED AT OFFICE
	14:00	BARGE ARRIVED
	14:30	ARRIVED AT KMTEX
	14:30	BARGE DOCKED
	14:40	COMMENCED BARGE PRIOR INSPECTION
	15:00	COMPLETED BARGE PRIOR INSPECTION
	15:00	CARGO HOSE CONNECTED
	17:00	GAUGED S/T 164 (TERMINAL XFER CARGO TO ANOTHER S/T PRIOR TO LOADING)
	17:15	GAUGED S/T 606 OPEN
	17:30	GAUGED S/T 501 OPEN
	17:50	INSPECTOR DEPARTED
	18:40	COMMENCED LOADING
12/13/2008	00:30	INSPECTOR NOTIFIED
	01:30	ARRIVED AT KMTEX
	01:55	COMPLETED LOADING; BARGE STOP
	02:10	GAUGED S/T 164
	02:20	GAUGED S/T 606 CLOSE
	02:30	CARGO HOSE DISCONNECTED
	02:35	GAUGED S/T 501 CLOSE
	02:50	COMMENCED BARGE FINAL INSPECTION
	03:20	COMPLETED BARGE FINAL INSPECTION
	03:30	COMMENCED CALCULATIONS
	04:00	COMPLETED CALCULATIONS

SGS

04:30 SAMPLES DELIVERED TO CES
04:45 INSPECTOR DEPARTED

Darren W. Le Blanc
Date: 12/15/2008

Shore volume calculated in accordance with: **TOV**
Vessel volume calculated in accordance with: **TOV**
Definition of Terms as per MPMS Chapter 1.
Procedures as per applicable MPMS Chapter 3.1a, 7, 8.1 or 8.2, 12.1 or 12.2, 17.1, 17.2, 17.4.

DISCLAIMER

This document is issued by the Company under its General Conditions of Service accessible at http://www.sgs.com/terms_and_conditions.htm. The Client's attention is drawn to the limitation of liability, indemnification and jurisdiction issues defined therein.

Any other holder of this document is advised that information contained hereon reflects the Company's findings at the time of its intervention only and within the limits of Client's instructions, if any. The Company's sole responsibility is to its Client and this document does not exonerate parties to a transaction from exercising all their rights and obligations under the transaction documents. Any unauthorized alteration, forgery or falsification of the content or appearance of this document is unlawful and offenders may be prosecuted to the fullest extent of the law. FIRCC REV. January 2007

SGS

To: Jenny Rust
SGS REF NO: 129574

CES ENVIRONMENTAL
REF #

SUMMARY OF FINDINGS

OPERATION

DISCHARGE FROM THE **CCL 26** TO SHORE TANK 607 AT KMTEX, PORT ARTHUR, TX ON **1/29/2009** OF A CARGO DESCRIBED AS **SULFIDIC CAUSTIC**

QUANTITY

		DELIVERED (1)	**RECEIVED (2)**	DIFFERENCE	PERCENT
TOV	BARRELS	8,619.43	8,593.61	25.82	0.30
	U.S. GALLONS	362,016.06	360,931.62	1,084.44	0.30

1. Delivered quantity based on barge figures
2. **Received quantity based on shore tank(s) TANK 607**
3. Arrival: 8,619.43 GSV BBLS
4. ROB: 0.00 GSV BBLS

TIME LOG

1/29/2009	08:00	INSPECTOR NOTIFIED
	10:00	INSPECTOR ARRIVED
	10:20	S/T 607 GAUGED OPEN
	10:25	BARGE ARRIVED
	10:30	NO EQUIPMENT TO CONNECT CARGO HOSE (1030-1300)
	10:50	BARGE DOCKED
	10:50	COMMENCED BARGE INSPECTION
	11:10	COMPLETED BARGE INSPECTION
	13:30	CARGO HOSE CONNECTED
	13:45	COMMENCED DISCHARGE
	17:25	INSPECTOR NOTIFIED
	18:15	COMPLETED DISCHARGE
	18:20	BLEW LINE BACK TO SHORE 1820-1850 (EMPTY TO EMPTY)
	18:25	INSPECTOR ARRIVED
	18:35	COMMENCED FINAL BARGE INSPECTION
	18:45	COMPLETED FINAL BARGE INSPECTION
	18:50	BARGE RELEASED TO TERMINAL
	19:00	S/T 607 GAUGED CLOSE
	19:05	CARGO HOSE DISCONNECTED

Darren W. Le Blanc
Date: 1/30/2009

SGS

Shore volume calculated in accordance with: **TOV**
Vessel volume calculated in accordance with: **TOV**
Definition of Terms as per MPMS Chapter 1.
Procedures as per applicable MPMS Chapter 3.1a, 7, 8.1 or 8.2, 12.1 or 12.2, 17.1, 17.2, 17.4.

DISCLAIMER

This document is issued by the Company under its General Conditions of Service accessible at http://www.sgs.com/terms_and_conditions.htm. The Client's attention is drawn to the limitation of liability, indemnification and jurisdiction issues defined therein.

Any other holder of this document is advised that information contained hereon reflects the Company's findings at the time of its intervention only and within the limits of Client's instructions, if any. The Company's sole responsibility is to its Client and this document does not exonerate parties to a transaction from exercising all their rights and obligations under the transaction documents. Any unauthorized alteration, forgery or falsification of the content or appearance of this document is unlawful and offenders may be prosecuted to the fullest extent of the law. FIRCC REV. January 2007

SGS

To: Jenny Rust
SGS REF NO: 132373

CES ENVIORMENTAL
TRIP #

SUMMARY OF FINDINGS

OPERATION

DISCHARGE FROM THE **CCL 7** TO SHORE TANK(S) 606, 607 AT KMTEX, PORT ARTHUR, TX ON **3/2/2009** OF A CARGO DESCRIBED AS **SULFIDIC CAUSTIC**

QUANTITY

		DELIVERED (1)	RECEIVED (2)	DIFFERENCE	PERCENT
TOV	BARRELS	5,699.357	**5,526.214**	173.143	3.038
	U.S. GALLONS	239,373.000	**232,101.000**	7,272.000	3.038

1. Delivered quantity based on barge figures
2. **Received quantity based on shore tank(s) 606, 607**
3. Arrival: 5,699.36 GSV BBLS
4. ROB: 0.00 GSV BBLS

TIME LOG

3/2/2009	16:18	INSPECTOR NOTIFIED
	17:00	BARGE ARRIVED
	17:10	BARGE DOCKED
	17:12	INSPECTOR ARRIVED
	17:12	COMMENCE CARGO INSPECTION
	18:00	COMPLETE CARGO INSPECTION
	18:30	SHORE TANK 606 GAUGED OPEN
	18:50	SHORE TANK 607 GAUGED OPEN
	18:50	CARGO HOSE CONNECTED-1X8"
	20:05	COMMENCE DISCHARGE
	20:20	INSPECTOR DEPARTED
	22:30	INSPECTOR NOTIFIED
	23:21	INSPECTOR ARRIVED
	23:45	COMPLETE DISCHARGE BY TANKERMAN
	23:45	COMMENCE ROB INSPECTION
	23:58	COMPLETE ROB INSPECTION
3/3/2009	00:01	CARGO HOSE DISCONNECTED
	00:30	SHORE TANK 606 GAUGED CLOSED
	00:45	SHORE TANK 607 GAUGED CLOSED
	01:50	PRELIMINARY CALCULATIONS OBSERVED
	02:00	DISPATCH NOTIFIED OF SHORE/VESSEL DIFFERENCE
	02:20	SHORE TANK 606 RE-GAUGED
	02:40	SHORE TANK 607 RE-GAUGED
	03:15	COMPLETE PAPERWORK
	03:20	INSPECTOR DEPARTED

Darren W. Le Blanc

Darren W. Le Blanc
Date: 3/3/2009

221
221 507

SGS

To: JENNY RUST
SGS REF NO: 134638

CES ENVIRONMENTAL
TRIP #

SUMMARY OF FINDINGS

OPERATION

DISCHARGE FROM THE **CCL 7** TO SHORE TANK(S) 606, 607 AT KMTEX, PORT ARTHUR, **TX** ON OF A CARGO DESCRIBED AS **SULFIDIC CAUSTIC**

QUANTITY

		DELIVERED (1)	**RECEIVED (2)**	DIFFERENCE	PERCENT
TOV	BARRELS	2,615.69	**2,637.43**	-21.74	0.82
	U.S. GALLONS	109,859.00	**110,772.00**	-913.00	0.82

1. Delivered quantity based on barge figures
2. **Received quantity based on shore tank(s 606, 607**
3. Arrival: 3,509.69 GSV BBLS
4. **ROB: 894.00** GSV BBLS

TIME LOG

3/17/2009	01:43	INSPECTOR ARRIVED
	01:44	COMMENCED GAUGING SHORE TANKS
	01:53	COMPLETE GAUGING SHORE TANKS
	01:54	COMMENCED BARGE CALCULATIONS
	01:63	COMPLETE CALCULATIONS
	18:00	HOSE ON
	18:40	COMMENCED UNLOADING
3/18/2009	00:30	INSPECTOR NOTIFIED
	01:00	COMPLETE UNLOADING
	01:30	INSPECTOR ARRIVED
	01:50	GAUGED AND MEASURED ROB IN TANK 1C OF BARGE
	02:00	HOSE OFF
	02:15	COMMENCED GAUGING SHORE TANKS
	03:00	COMPLETE GAUGING SHORE TANKS
	03:15	COMMENCED DOING PAPPERWORK
	03:40	COMPLETE PAPPERWORK
	04:00	INSPECTOR DEPARTED

Darren W. Le Blanc
Date: 3/18/2009

Shore volume calculated in accordance with: TOV
Vessel volume calculated in accordance with: TOV
Definition of Terms as per MPMS Chapter 1.

SGS

To: JENNY RUST
SGS REF NO: 138341

CES ENVIRONMENTAL
REF #

SUMMARY OF FINDINGS

OPERATION

DISCHARGE FROM THE **CCL 26** TO SHORE TANK 222 AT KMTEX, PORT ARTHUR, TX ON **4/18/2009** OF A CARGO DESCRIBED AS **SULFIDIC CAUSTIC**

QUANTITY

		DELIVERED (1)	**RECEIVED (2)**	DIFFERENCE	PERCENT
TOV	BARRELS	2,418.42	**2,415.21**	3.21	0.13
	U.S. GALLONS	101,573.64	**101,439.00**	134.64	0.13

1. Delivered quantity based on barge figures
2. **Received quantity based on shore tank 222**
3. Arrival: 2,418.42 TOV
4. ROB: 0.00 TOV BBLS

TIME LOG

4/17/2009	15:40	INSPECTOR NOTIFIED
	15:45	BARGE ARRIVED
	16:00	BARGE DOCKED
	16:40	ARRIVED AT KMTEX
	17:00	COMMENCED PRIOR DISHCARGE INSPECTION CCL 26
	17:00	CARGO HOSE CONNECTED
	17:10	COMPLETED PRIOR DISCHARGE INSPECTION CCL 26
	17:40	GAUGED S/TK 222 OPEN
	17:50	COMMENCED CALCULATIONS
	18:00	COMPLETED CALCULATIONS
	18:00	COMMENCED DISCHARGE
	18:10	INSPECTOR DEPARTED
4/18/2009	00:00	INSPECTOR NOTIFIED
	00:35	ARRIVED AT KMTEX
	01:20	COMPLETED DISCHARGE
	01:25	COMMENCED FINAL INSPECTION
	01:30	COMPLETED FINAL INSPECTION
	01:45	GAUGED S/TK 222 CLOSE
	01:50	CARGO HOSE DISCONNECTED
	01:55	COMMENCED CALCULATIONS
	02:05	COMPLETED CALCULATIONS
	02:10	BARGE RELEASED
	02:20	INSPECTOR DEPARTED

Darren W. Le Blanc
Date: 4/20/2009

SGS

Shore volume calculated in accordance with: **TOV**
Vessel volume calculated in accordance with: **TOV**
Definition of Terms as per MPMS Chapter 1.
Procedures as per applicable MPMS Chapter 3.1a, 7, 8.1 or 8.2, 12.1 or 12.2, 17.1, 17.2, 17.4.

DISCLAIMER

This document is issued by the Company under its General Conditions of Service accessible at http://www.sgs.com/terms_and_conditions.htm. The Client's attention is drawn to the limitation of liability, indemnification and jurisdiction issues defined therein.

Any other holder of this document is advised that information contained hereon reflects the Company's findings at the time of its intervention only and within the limits of Client's instructions, if any. The Company's sole responsibility is to its Client and this document does not exonerate parties to a transaction from exercising all their rights and obligations under the transaction documents. Any unauthorized alteration, forgery or falsification of the content or appearance of this document is unlawful and offenders may be prosecuted to the fullest extent of the law. FIRCC REV. January 2007

SGS

To: Jenny Rust
SGS REF NO: 140689

CES
REF #

SUMMARY OF FINDINGS

OPERATION

DISCHARGE FROM THE **CCL 26** TO SHORE TANK 607 AT KMTEX, PORT ARTHUR, TX ON **5/7/2009** OF A CARGO DESCRIBED AS **SPENT CAUSTIC**

QUANTITY

		DELIVERED (1)	RECEIVED (2)	DIFFERENCE	PERCENT
TOV	BARRELS	2,032.45	**2,050.93**	-18.48	0.90
	U.S. GALLONS	85,362.90	**86,139.00**	-776.10	0.90

1. Delivered quantity based on barge figures
2. **Received quantity based on shore tank(s) 607**
3. Arrival: 2,032.45 GSV BBLS
4. ROB: 0.00 GSV BBLS

TIME LOG

5/7/2009	09:30	INSPECTOR NOTIFIED
	10:30	INSPECTOR INFORMED BARGE NOT ARRIVE YET
	11:30	INSPECTOR RENOTIFIED
	11:45	BARGE ARRIVED
	12:00	BARGE DOCKED
	12:45	CARGO HOSE CONNECTED
	14:00	INSPECTOR ARRIVED
	14:05	COMMENCED INSPECTION OF CARGO
	14:15	COMPLETED INSPECTION OF CARGO
	14:40	SHORE TANK 607 GAUGED OPEN
	15:00	COMMENCED DISCHARGE
	15:55	COMPLETED DISCHARGE
	15:55	COMMENCED INSPECTION OF CARGO TANKS
	16:00	COMPLETED INSPECTION OF CARGO TANKS
	16:30	CARGO HOSE DISCONNECTED
	16:30	SHORE TANK 607 GAUGED CLOSED
	16:35	BARGE RELEASED
	17:00	INSPECTOR DEPARTED

Darren W. Le Blanc
Date: 5/8/2009

SGS

Shore volume calculated in accordance with: **TOV**
Vessel volume calculated in accordance with: **TOV**
Definition of Terms as per MPMS Chapter 1.
Procedures as per applicable MPMS Chapter 3.1a, 7, 8.1 or 8.2, 12.1 or 12.2, 17.1, 17.2, 17.4.

DISCLAIMER

This document is issued by the Company under its General Conditions of Service accessible at http://www.sgs.com/terms_and_conditions.htm. The Client's attention is drawn to the limitation of liability, indemnification and jurisdiction issues defined therein.

Any other holder of this document is advised that information contained hereon reflects the Company's findings at the time of its intervention only and within the limits of Client's instructions, if any. The Company's sole responsibility is to its Client and this document does not exonerate parties to a transaction from exercising all their rights and obligations under the transaction documents. Any unauthorized alteration, forgery or falsification of the content or appearance of this document is unlawful and offenders may be prosecuted to the fullest extent of the law. FIRCC REV. January 2007

NOT UNLOADED AT P.A

SGS

Inspection Report (LOADING)

Subject : CCL 26
Product : SULFIDIC CAUSTIC
Client ref.: TBD

Date : 6/9/2008
Location : Lake Charles, La / CITGO
Client : CES Environmental Services

Our ref.: 101266

Summary of Figures

	Bbls @ 60°F	Gallons @ 60°F
Shore Tank Active during Loading		
Vessel's Measurements		
Vessel's figures before loading (OBQ) Free Water	0.00	
Vessel's figures before loading (OBQ) Liquid	18.02	
Vessel's figures before loading (OBQ) Non Liquid	0.00	
Vessel's figures before loading (OBQ) Total	18.02	756.84
Vessel's figures TCV on board after loading	8,504.19	357,175.98
Vessel's figures TCV loaded	8,486.17	35,6419.14
Vessel's figures Free Water loaded	0.00	0.00
Vessel's figures GSV loaded	8,486.17	356,419.14

Cargo stowage Cargo tanks no(s): CCL 26[1C, 2C, 3C]

Samples

SHORE TANK - 2X1 QUART RUNNING

BARGE - 2X1 QUART RUNNING PER CARGO TANK.

Time Log

6/8/2008	2100	INSPECTOR NOTIFIED
	2100	VESSEL ARRIVED
	2110	VESSEL DOCKED
	2130	ARM ON
	2200	INSPECTOR ARRIVED
	2215	COMMENCED PRE LOAD DECK INSPECTION
	2230	COMPLETED PRE LOAD DECK INSPECTION
	2355	STARTED LOADING CCL 26
6/9/2008	2200	FINISHED LOADING CCL 26
	2230	COMMENCED POST LOAD DECK INSPECTION
	2245	ARM OFF
	2300	COMPLETED POST LOAD DECK INSPECTION
	2305	COMMENCED FINAL CALCULATIONS
	2325	COMPLETED FINAL CALCULATIONS
	2330	INSPECTOR DEPARTED

SGS

Brett Daigle
for SGS Oil, Gas & Chemicals Services
6/10/2008

Shore volume calculated in accordance with:
Vessel volume calculated in accordance with: ASTM D 1250-04
Procedures as per applicable MPMS Chapter 3.1a, 7, 8.1 or 8.2, 12.1 or 12.2, 17.1, 17.2, 17.4.

Disclaimer

This document is issued by the Company under its General Conditions of Service accessible at http://www.sgs.com/terms_and_conditions.htm. The Client's attention is drawn to the limitation of liability, indemnification and jurisdiction issues defined therein.

Any other holder of this document is advised that information contained hereon reflects the Company's findings at the time of its intervention only and within the limits of Client's instructions, if any. The Company's sole responsibility is to its Client and this document does not exonerate parties to a transaction from exercising all their rights and obligations under the transaction documents. Any unauthorized alteration, forgery or falsification of the content or appearance of this document is unlawful and offenders may be prosecuted to the fullest extent of the law.
FIRCC REV January 2007

F-2

PORT / TERMINAL: Lake Charles, La / Citgo	OFFICE: LAKE CHARLES, LA TEL: (337) 625-1455
VESSEL: CCL 26 VOY #:	INSPECTOR(S): mike elliott
DATE: 6/8/2008	SGS FILE: 101266
CARGO: SULFIDIC CAUSTIC	CLIENT: CES ENVIROMENTAL REF:

SGS

VESSEL QUANTITY SUMMARY

Oil Gas & Chemicals Services Division.

☐ AT LOADING ☐ AT TRANSFER ☑ AT DISCHARGE ☐ CRUDE OIL ☑ PRODUCTS

☐ API @ 60°F : ☐ R.D. 60°F/60°F ☐ Density Lbs/Gal @

S&W % VOL:

SOURCE OF ANALYTICAL DATA:

	VOLUME		WCF (t 8)	WEIGHT		
	BBLS	U.S. GALS		POUNDS	LONG TONS	METRIC TONS (AIR)
VESSEL'S QUANTITIES	V.E.F. CORRECTED : ☑ YES ☐ NO VEF:					
TOTAL CALCULATED VOL	8504.19	357175.98				
FREE WATER	0.00	0.00				
GROSS STANDARD VOLUME	8504.19	357175.98				
S & W VOLUME						
(NET) STANDARD VOLUME						

☑ OBQ ☐ ROB

LIQUID MATERIAL	18.02	756.84				
NON-LIQUID MATERIAL	0.00	0.00				
FREE WATER	0.00	0.00				
TOTAL	18.02	756.84				

☐ LOADED QUANTITIES ☐ DISCHARGED QUANTITIES

TOTAL CALCULATED VOL	8486.17	356419.14				
FREE WATER	0.00	0.00				
GROSS STANDARD VOLUME	8486.17	356419.14				
S & W VOLUME						
(NET) STANDARD VOLUME						

ARE SLOPS INCLUDED IN CALCULATIONS ☐ YES ☐ NO ☐ NO SLOPS ON BOARD

STOWAGE O/B VESSEL:

REMARKS:

CHECKED DATE

Copyright SGS-OG&C 1995 - Rev Oct 2003

Services rendered according to published General Terms and Conditions

F-3A

PORT / TERMINAL: Lake Charles, La / Citgo	OFFICE: LAKE CHARLES, LA TEL: (337) 625-1455
VESSEL: CCL 26 VOY #:	INSPECTOR(S): mike elliott
DATE: 6/8/2008	SGS FILE: 101266
CARGO: SULFIDIC CAUSTIC	CLIENT: CES ENVIROMENTAL REF:

SGS

VOYAGE ANALYSIS REPORT

Oil Gas & Chemicals Services Division.

☑ LOADING ☐ V-V TRANSFER ☐ DISCHARGE ☐ SUMMARY					Type of Voyage Simple	C/P DATE
Load Port/Terminal/Berth Lake Charles / CITGO	ARRIVED 6/8/2008	SAILED 6/10/2008	Discharge Port/Terminal/Berth		ARRIVED	SAILED
VOLUME UNITS ☑ BBLS ☐ GALS ☐ M³ ☐ L	SUPPLIER CITGO	RECEIVER CES	VCF SHORE LOAD	VCF SHORE DISCH	VCF VESSEL LOAD	VCF VESSEL DISCH

DESCRIPTION	API	TCV	FW	GSV	S&W	NSV	Reference
I. COMPARISON OF SHORE QUANTITIES IN CUSTODY TRANSFER							
Bill of Lading 1.							(1)
Outturn 2.							(2)
Diff. 3.							(3)=(2) - (1)
Diff. % 4.							(4) = (3) / (1) x 100
Recalc. B/L 5.	(a)		Recalculate if B/L and O/T use different tables.				(5) (a) Vol. Diff.
II. VESSEL/SHORE QUANTITIES AT ( ) LOAD PORT(S)							
Vessel Sailing A.		8504.19	0.00	8504.19	LIQUID	NON-LIQUID	(A)
OBQ (All) B.		18.02	0.00	18.02	18.02	0.00	(B)
Loaded C.		8486.17	0.00	8486.17			(C)=(A) - (B)
Difference D.		8486.17					(D)=(C)-[(1) or (5)]
Difference % E.		0.00					(E)=(D)/[(1)or(5)]x100
Load Vessel Ratio F.		0.0000					(F)=(C)/[(1)or(5)]
Load VEF G.							(G)
Theoretical Shore H.							(H)=(C) / (G)
Theoretical Shore Diff. I.							(I)=(H) - [(1) or (5)]
Theoretical Shore Diff. % J.							(J)=(I)/[(1) or (5)]x100
II. VESSEL/SHORE QUANTITIES AT ( ) DISCHARGE PORT(S)							
Vessel Arrival K.					LIQUID	NON-LIQUID	(K)
ROB (All) L.							(L)
Discharged M.							(M) = (K) - (L)
Difference N.							(N) = (2) - (M)
Difference % O.							(O) = (N) / (2) x 100
Discharge Vessel Ratio P.							(P) = (M) / (2)
Discharge VEF Q.							(Q)
Theoretical Shore R.							(R) = (M) / (Q)
Theoretical Shore Diff. S.							(S) = (2) - (R)
Theoretical Shore Diff. % T.							(T) = (S) / (2) x 100
III. VESSEL/'S COMPARISON OF LOADING AND DISCHARGE PORT(S) VCF TABLE MUST BE CONSISTENT							
Transit Difference U.							(U) = (K) - (A)
Difference % V.					LIQUID	NON-LIQUID	(V) = (U) / (A) x 100
OBQ/ROB Difference W.							(W) = (L) - (B)

ADJ TCV DIFF : TCV Difference (3) - OBQ (B) + ROB (L) (Quantity) /	S&W at Load Port : [S&W(1)/GSV(1)]X100	S&W at Disch Port : [S&W(2)/GSV(2)]X100

Comments :

Prepared by :	Title :	Company :	Date Completed :

Copyright SGS-OG&C June 1997 - Rev Oct 2003

Services rendered according to published General Terms and Conditions

F-4

PORT / TERMINAL: Lake Charles, La / Citgo	OFFICE: LAKE CHARLES, LA TEL: (337) 625-1455
VESSEL: CCL 26 VOY #:	INSPECTOR(S): mike elliott
DATE: 6/8/2008	SGS FILE: 101266
CARGO: SULFIDIC CAUSTIC	CLIENT: CES ENVIROMENTAL REF:

SGS

TIME LOG

Oil Gas & Chemicals Services Division.

☐ AT LOADING ☐ AT TRANSFER ☑ AT DISCHARGE

YEAR 2008 / MONTH JAN FEB MAR APR MAY JUN JUL AUG SEP OCT NOV DEC

Date	Hour	
6/8	21:00	INSPECTOR NOTIFIED
6/8	21:00	VESSEL ARRIVED
6/8	21:10	VESSEL DOCKED
6/8	21:30	ARM ON
6/8	22:00	INSPECTOR ARRIVED
6/8	22:15	COMMENCED PRE LOAD DECK INSPECTION
6/8	22:30	COMPLETED PRE LOAD DECK INSPECTION
6/8	23:55	STARTED LOADING CCL 26
6/9	22:00	FINISHED LOADING CCL 26
6/9	22:30	COMMENCED POST LOAD DECK INSPECTION
6/9	22:45	ARM OFF
6/9	23:00	COMPLETED POST LOAD DECK INSPECTION
6/9	23:05	COMMENCED FINAL CALCULATIONS
6/9	23:25	COMPLETED FINAL CALCULATIONS
6/9	23:30	INSPECTOR DEPARTED

DELAYS AND STOPPAGES :

TIMES MARKED * ARE SUBMITTED TO US. TIME LOG PAGE OF

Copyright SGS-OG&C June 1997 - Rev Oct 2003 Services rendered according to published General Terms and Conditions

LOGGED DATE 6/9/08

F-15

PORT / TERMINAL: Lake Charles, La / Citgo		OFFICE: LAKE CHARLES, LA	TEL: (337) 625-1455
VESSEL: CCL 26	VOY #:	INSPECTOR(S): mike elliott	SGS FILE: 101266
DATE: 6/8/2008 CARGO: SULFIDIC CAUSTIC		CLIENT: CES ENVIROMENTAL	REF:

SGS

VESSEL MEASUREMENT SYSTEM

☑ OPEN ☐ CLOSE / RESTRICTED

☐ ARRIVAL ☑ DEPARTURE

Oil Gas & Chemicals Services Division.

☑ AT LOADING ☐ AT TRANSHIPMENT ☐ AT DISCHARGE | ☑ CARGO TANKS ☐ BALLAST TANKS ☐ NON/OTHER CARGO

UNITS: ☑ FT-IN ☐ FT ☐ MM ☐ OTHER: | UNITS: ☑ BBLS ☐ U.S. GALS ☐ M³ ☐ OTHER:

TANK #	REFERENCE HEIGHT	OBSERVED REFERENCE HEIGHT	¤ INNAGE	WATER INN	TEMPERATURES °F § PROBE	AVG. TEMP	CORRECTED MEASURE	TOTAL OBSERVED VOLUME	FREE WATER	GROSS OBSERVED VOLUME	^ V.C.F. (t 6B)	GROSS STANDARD VOLUME	*
1C	16-2-1/2	16-2-1/2	12-6-3/4	0-0	90.5	90.5	12-6-3/4	2998.47	0.00	2998.47	1.00000	2998.47	
2C	16-2-1/2	16-2-1/2	10-9-7/8	0-0	90.4	90.4	10-9-7/8	2671.96	0.00	2671.96	1.00000	2671.96	
3C	16-2 3/4	16-2 3/4	10-3-1/2	0-0	90.4	90.4	10-3-1/2	2833.76	0.00	2833.76	1.00000	2833.76	
							TOTALS	8504.19	0.00	8504.19		8504.19	

PROBE WAS CHECKED PRIOR TO USE ☑ YES ☐ NO ☐ NOT USED

GAUGE LOCATION: ☑ STANDPIPE ☐ G.H. on Expansion Trunk ☐ OTHER:

* GAUGE POSITION: C = Center of tank F = Forward of Center A = Aft of Center

SAMPLES DRAWN: 2x1 QUART RUNNING EACH TANK

CORRECTED MEASURE: w = Wedge corrected, t = Trim corrected

API @ 60°F SOURCE:

S & W - VOL %: SOURCE:

S & W - VOL: WCF TABLE: (t 8)

NET STANDARD VOLUME

GROSS STANDARD WEIGHT 8504.19

NET STANDARD WEIGHT

TOTAL CALC. VOL. DEPARTURE

BALLAST TANKS PERMANENT ☐ YES IF ☐ NO (SEE F-15 BALLAST TANKS)

SEASUCTION SEAL #'S:

DRAFT: FWD (P) 9-6 AFT (P) 9-6 LIST: ° (P) / (S)

(S) 9-6 (S) 9-6

SEA CONDITION: CALM IN PORT

REMARKS:

^ VOLUME CALCULATED IN ACCORDANCE WITH ASTM D 1250-04

¤ LIQUID LEVEL GAUGES IN ACCORDANCE WITH API MPMS 17.2.5.2

§ TEMPERATURE DETERMINATION IN ACCORDANCE WITH API MPMS 17.2.5.3

VESSEL'S STAFF	INSPECTOR
	MIKE ELLIOTT

Copyright SGS-OGS 2001 - Rev April 2005

Services rendered according to published General Terms and Conditions

RECEIVED DATE 6/10/08

F-16

PORT / TERMINAL: Lake Charles, La / Citgo		OFFICE: LAKE CHARLES, LA	TEL: (337) 625-1455
VESSEL: CCL 26	VOY #:	INSPECTOR(S): mike elliott	SGS FILE: 101266
DATE: 6/8/2008 CARGO: SULFIDIC CAUSTIC		CLIENT: CES ENVIROMENTAL	REF:

SGS

☑ OBQ ☐ ROB MEASUREMENT

NOTE: DO NOT USE V.C.F. IF TEMPERATURE IS NOT TAKEN

Oil Gas & Chemicals Services Division.

UNITS: ☑ FT-IN ☐ FT ☐ MM ☐ OTHER: | UNITS: ☑ BBLS ☐ U.S. GALS ☐ M³ ☐ OTHER:

TANK #	REFERENCE HEIGHT	OBSERVED REFERENCE HEIGHT	*	OBSERVED INNAGE	FREE WATER INNAGE	NON-LIQUID INNAGE	AVG. TEMP	CORRECTED MEASURE	TOTAL OBSERVED VOLUME	^ V.C.F. (t 6B)	FREE WATER VOLUME	NON-LIQUID VOLUME	LIQUID VOLUME
1C	16-2-1/2	16-2-1/2		0-0-1	0-0	0-0			18.02		0.00	0.00	18.02
2C	16-2-1/2	16-2-1/2		0-0-0	0-0	0-0			0.00		0.00	0.00	0.00
3C	16-2 3/4	16-2 3/4		0-0-0	0-0	0-0			0.00		0.00	0.00	0.00
								TOTALS	18.02		0.00	0.00	18.02

^ VOLUME CALCULATED IN ACCORDANCE WITH

On behalf of our client(s) we would like to bring to your attention that in our opinion :

Bbls of LIQUID MATERIAL

Bbls of NON-LIQUID MATERIAL

remains on board your vessel. To the extent we are aware of contractual relationships, this material belongs to our client(s) and should be pumped ashore. In case you are unable to do so please indicate your reasons below. In any event, we have to advise our client(s) of the above and reserve his right to seek compensation for the undelivered amount. Statements with regards to flowability and similiar advisory services express personal opinions without responsibility for SGS.

d = dip, u = Ullage; corrected measure, w = Wedge corrected, t = Trim corrected

GAUGE LOCATION: ☑ STANDPIPE ☐ G.H. on Expansion trunk ☐ OTHER:

* GAUGE POSITION: C = Center of tank F = Forward of Center A = Aft of Center

OBQ SAMPLED ☐ YES ☐ NO IF NO REASON

OBQ TESTED ☐ YES ☐ NO IF NO REASON

ROB SAMPLED ☐ YES ☐ NO IF NO REASON

DRAFT: FWD (P) 2-0 AFT (P) 2-0 LIST: 0 (P) / (S)

(S) 2-0 (S) 2-0

SEA CONDITION: CALM IN PORT

VESSEL'S STAFF	MIKE ELLIOTT INSPECTOR

CHECKED DATE 6/6/08

Copyright SGS-OG&C 1997 - Rev April 2005

Services rendered according to published General Terms and Conditions

F-7

PORT / TERMINAL: Lake Charles, La / Citgo	OFFICE: LAKE CHARLES, LA TEL: (337) 625-1455
VESSEL: CCL 26 VOY #:	INSPECTOR(S): mike elliott
DATE: 6/8/2008	SGS FILE: 101266
CARGO: SULFIDIC CAUSTIC	CLIENT: CES ENVIROMENTAL REF:

SGS

INFORMATION FOR CLEANLINESS INSPECTION

Oil Gas & Chemicals Services Division.

☑ AT LOADING ☐ AT TRANSFER ☐ AT DISCHARGE ☐ SHORE ☑ VESSEL

THE INFORMATION ON THIS LIRIS F-7 WILL BE USED TO COMPLETE LIRIS F-9 WAS SUBMITTED TO US BY THE PERSON(S) INDICATED BELOW

WE CONSULTED FOR TANK INSPECTION ON (DATE) 6/8/2008 (TIME) 22:15 WITH:

☐ VESSEL'S STAFF ☐ BARGE OPERATOR ☑ TERMINAL REPRESENTATIVE ☐ CHARTERER

☐ OTHER (SPECIFY):

PLEASE PRINT NAME(S)

TANK MATERIAL:

TANK #:	1-3 CENTER				
MATERIAL	MILD STEEL				
COATING NAME	N/A				
APPARENT CONDITION *	ACCEPTABLE				
TANK #:					
MATERIAL					
COATING NAME					
APPARENT CONDITION *					

COATING WAS CHECKED AGAINST ☐ MANUFACTURERS ☐ OTHER (SPECIFY) CHECKLIST

IF NOT CHECKED, REASO

* SELECT: e.g. % MISSING % DISCOLORED %PEELING ACCEPTABLE etc. (ALL PERCENTAGES ARE APPROXIMATIONS)

OUR INSPECTION FOR F-9 COVERS THE CLEANLINESS OF THE COATINGS, NOT ITS SUITABILITY IN REGARD TO CARGO CONTAMINATION.

PREVIOUS CARGOES:

TANK#	THIRD LAST	SECOND LAST	LAST	COMPATIBLE
1-3 CENTER	CAUSTIC	CAUSTIC	CAUSTIC	☐ YES ☐ NO
				☐ YES ☐ NO
				☐ YES ☐ NO
				☐ YES ☐ NO
				☐ YES ☐ NO
				☐ YES ☐ NO
				☐ YES ☐ NO
				☐ YES ☐ NO

LINES - PUMPS:

NAME	MATERIAL	LAST USED FOR	PRESSED WITH INERT GAS/AIR
			☐ YES ☐ NO PRESSURE
			☐ YES ☐ NO PRESSURE
			☐ YES ☐ NO PRESSURE
			☐ YES ☐ NO PRESSURE
			☐ YES ☐ NO PRESSURE

THE CLEANLINESS CONDITION OF THE CARGO PUMPS AND LINES CANNOT BE ASCERTAINED BY VISUAL EXAMINATION. IT IS RECOMMENDED TO TEST "LINE" SAMPLES PRIOR TO COMMENCING THE TRANSFER AND "FIRST-IN" SAMPLES AT THE START OF THE TRANSFER TO MINIMIZE CARGO CONTAMINATION.

VESSEL REPRESENTATIVE

MIKE ELLIOTT
INSPECTOR

Copyright SGS-OG&C 1995 - Rev Oct 2003

Services rendered according to published General Terms and Conditions

CHECKED BY
DATE

F-9 Page 1 of 1

PORT / TERMINAL: Lake Charles, La / Citgo	OFFICE: LAKE CHARLES, LA TEL: (337) 625-1455
VESSEL: CCL 26 VOY #:	INSPECTOR(S): mike elliott
DATE: 6/8/2008	SGS FILE: 101266
CARGO: SULFIDIC CAUSTIC	CLIENT: CES ENVIROMENTAL REF:

SGS

TANK CLEANLINESS INSPECTION

Oil Gas & Chemicals Services Division.

☑ AT LOADING ☐ AT TRANSFER ☐ AT DISCHARGE

☐ AS INSPECTION ONLY ☑ AS PRE-INSPECTION ☐ WITH CUSTODY TRANSFER

USE A SEPARATE FORM F-9 PER INSPECTION

THIS IS THE ☑ FIRST ☐ SECOND ☐ THIRD _____ TH INSPECTION

TANK(S): 1-3 CENTER

BASED ON SUBMITTED INFORMATION (SEE LIRIS F-7) AND :

☐ VISUAL CHECK FOR RESIDUES FROM DECKLEVEL (SEE LIRIS F-15 OR F-20)
☐ MEASURING OF RESIDUES FROM DECK LEVEL (SEE LIRIS F-16)
☑ PHYSICAL ENTRY (TANK SAFE ATMOSPHERE STATEMENT BELOW MUST BE COMPLETED PRIOR TO ENTRY)

AND ☑ VISUAL INSPECTION
AND ☐ WALLWASHING (ANALYTICAL REPORT ON FILE)
AND ☐ TESTING OF HEATING COILS

☐ WERE ACCEPTED FOR CLEANLINESS TO CARRY A CARGO OF CAUSTIC

☐ WERE REJECTED FOR CLEANLINESS TO CARRY A CARGO OF _____

REASON : _____

☐ SHIP'S STAFF AND/OR ☐ SGS SUPERVISOR AND/OR ☐ CLIENT NOTIFIED ON BY

☐ INSPECTION COMPLETED AT HRS ON THE

☐ TANK(S) SUBJECT TO A FINAL INSPECTION AT LOADING BERTH IN CASE OF PRE-INSPECTION

SIGNATURES : _____ FOR VESSEL _____ FOR TERMINAL MIKE ELLIOTT INSPECTOR

* IS THIS TANK ACCEPTANCE BASED SOLELY ON SUBMITTED INFORMATION EVALUATION ? ☐ YES ☐ NO

IF YES; ISSUE N.O.A.D. AND INFORM YOUR ☐ SGS SUPERVISOR AND/OR ☐ CLIENT(S) IMMEDIATELY.

TANK SAFE ATMOSPHERE STATEMENT

The undersigned certifies that those tank(s) indicated on line 13 of this page have been cleaned and gas freed as reported on the reverse side of the SGS F-7 and that the tank(s) in question are in all respects safe for entry. The undersigned hereby grants permission for SGS personnel to enter said tanks.

Tank Safe Atmosphere Statement signed _____ hours on _____

SIGNATURES : _____ FOR VESSEL _____ FOR TERMINAL

PRINT NAME (S) : _____ _____

NOTE: DO NOT ENTER THE TANK(S) if this TANK SAFE ATMOSPHERE STATEMENT is not signed and contact your supervisor for further instructions.

CHECKED DATE 6/10/08

Copyright SGS-OG&C 1995 - Rev Oct 2003 Services rendered according to published General Terms and Conditions

SGS

NOT UNLOADED 2 R.A.

Inspection Report (LOADING)

Subject :	CCL 26	Date :	7/22/2008	Our ref.:	107438
Product :	SULFIDIC CAUSTIC	Location :	Lake Charles, La / Citgo		
Client ref.:	TBD	Client :	CES ENVIRONMENTAL SERVICES		

Summary of Figures

		Bbls @ 60°F	Gallons @ 60°F	Long Tons	Metric Tonnes	Pounds
Shore Measurements						
Total Shore figures delivered	GSV	8,296.52	348,453.84			
Average API Gravity @ 60°F						
Shoretanks no(s):	ST 182, S/T 182					
Vessel's Measurements						
Vessel's figures before loading (OBQ) Free Water		0.00				
Vessel's figures before loading (OBQ) Liquid		18.02				
Vessel's figures before loading (OBQ) Non Liquid		0.00				
Vessel's figures before loading (OBQ) Total		18.02	756.84			
Vessel's figures TCV on board after loading		8,338.95	350,235.90			
Vessel's figures TCV loaded		8,320.93	349,479.06			
Vessel's figures Free Water loaded		0.00	0.00			
Vessel's figures GSV loaded		8,320.93	349,479.06			

Cargo stowage Cargo tanks no(s): CCL 26[1C, 2C, 3C]

Samples

SHORE TANK- 2X1 QUARTS RUNNING

BARGE - 2X1 QUART RUNNING EACH CARGO TANK AFTER LOAD.

Time Log

7/21/2008	0820	VESSEL ARRIVED
	0825	VESSEL ALL FAST
	0830	INSPECTOR NOTIFIED
	0910	INSPECTOR ARRIVED
	0915	COMMENCED PRE LOADING DECK INSPECTION
	0925	COMPLETED PRE LOADING DECK INSPECTION
	1030	ST 182 GUAGED SAMPLED AND TEMPERATURED / OPEN
	1045	CARGO HOSE CONNECTED
	1100	COMMENCED LOADING
7/22/2008	0120	INSPECTOR NOTIFIED
	0200	INSPECTOR ARRIVED
	0210	LOADING SHUT DOWN FOR REFILLING OF ST 182
	0230	ST 182 GUAGED SAMPLED AND TEMPERATURED / CLOSED
	0240	COMMENCED REFILLING OF ST 182
	0300	INSPECTOR DEPARTED
	1145	INSPECTOR NOTIFIED
	1230	INSPECTOR ARRIVED TO GUAGE 182 OPEN

SGS North America Inc. | Oil, Gas & Chemicals Services
4701 E. NAPOLEON SULPHUR, LA 70663 t(337) 625-1455) f(337) 625-1721) www.sgs.com

Member of the SGS Group (Societe Generale de Surveillance)

SGS

1305	INSPECTOR DEPARTED COULD NOT GUAGE TANK DUE TO LIGHTNING
1350	INSPECTOR NOTIFIED
1400	INSPECTOR ARRIVED
1430	ST 182 GUAGED TEMPERATURED AND REOPENED
1435	RESUMED LOADING
1500	INSPECTOR DEPARTED
1840	INSPECTOR NOTIFIED
1920	INSPECTOR ARRIVED
1925	COMMENCED POST LOAD DECK INSPECTION
1930	COMPLETED LOADING
2010	COMPLETED POST LOAD DECK INSPECTION
2045	ST 182 GUAGED TEMPERATURED AND CLOSED
2050	COMMENCED CALCULATIONS
2120	COMPLETED CALCULATIONS
2130	PAPERWORK PLACED ON VESSEL AND VESSEL RELEASED
2145	INSPECTOR DEPARTED

Brett Daigle
for SGS Oil, Gas & Chemicals Services
7/24/2008

Shore volume calculated in accordance with: ASTM D 1250-04
Vessel volume calculated in accordance with: ASTM D 1250-04
Procedures as per applicable MPMS Chapter 3.1a, 7, 8.1 or 8.2, 12.1 or 12.2, 17.1, 17.2, 17.4.

Disclaimer

This document is issued by the Company under its General Conditions of Service accessible at http://www.sgs.com/terms_and_conditions.htm. The Client's attention is drawn to the limitation of liability, indemnification and jurisdiction issues defined therein.

Any other holder of this document is advised that information contained hereon reflects the Company's findings at the time of its intervention only and within the limits of Client's instructions, if any. The Company's sole responsibility is to its Client and this document does not exonerate parties to a transaction from exercising all their rights and obligations under the transaction documents. Any unauthorized alteration, forgery or falsification of the content or appearance of this document is unlawful and offenders may be prosecuted to the fullest extent of the law.
FIRCC REV. January 2007

F-4

PORT / TERMINAL: Lake Charles, La / Citgo	OFFICE: LAKE CHARLES, LA TEL: (337) 625-1455
VESSEL: CCL 26 VOY #:	INSPECTOR(S): C. BUSBY
DATE: 7/21/2008	SGS FILE: 107438
CARGO: SULFIDIC CAUSTIC	CLIENT: CES Environmental REF: TBN

SGS

TIME LOG

Oil Gas & Chemicals Services Division.

☑ AT LOADING ☐ AT TRANSFER ☐ AT DISCHARGE

YEAR 2008 / MONTH JAN FEB MAR APR MAY JUN JUL AUG SEP OCT NOV DEC

Date	Hour	
7/21	08:20	VESSEL ARRIVED
7/21	08:25	VESSEL ALL FAST
7/21	08:30	INSPECTOR NOTIFIED
7/21	09:10	INSPECTOR ARRIVED
7/21	09:15	COMMENCED PRE LOADING DECK INSPECTION
7/21	09:25	COMPLETED PRE LOADING DECK INSPECTION
7/21	10:30	ST 182 GUAGED SAMPLED AND TEMPERATURED / OPEN
7/21	10:45	CARGO HOSE CONNECTED
7/21	11:00	COMMENCED LOADING
7/22	01:20	INSPECTOR NOTIFIED
7/22	02:00	INSPECTOR ARRIVED
7/22	02:10	LOADING SHUT DOWN FOR REFILLING OF ST 182
7/22	02:30	ST 182 GUAGED SAMPLED AND TEMPERATURED / CLOSED
7/22	02:40	COMMENCED REFILLING OF ST 182
7/22	03:00	INSPECTOR DEPARTED
7/22	11:45	INSPECTOR NOTIFIED
7/22	12:30	INSPECTOR ARRIVED TO GUAGE 182 OPEN
7/22	13:05	INSPECTOR DEPARTED COULD NOT GUAGE TANK DUE TO LIGHTNING
7/22	13:50	INSPECTOR NOTIFIED
7/22	14:00	INSPECTOR ARRIVED
7/22	14:30	ST 182 GUAGED TEMPERATURED AND REOPENED
7/22	14:35	RESUMED LOADING
7/22	15:00	INSPECTOR DEPARTED
7/22	18:40	INSPECTOR NOTIFIED
7/22	19:20	INSPECTOR ARRIVED
7/22	19:25	COMMENCED POST LOAD DECK INSPECTION
7/22	19:30	COMPLETED LOADING
7/22	20:10	COMPLETED POST LOAD DECK INSPECTION
7/22	20:45	ST 182 GUAGED TEMPERATURED AND CLOSED
7/22	20:50	COMMENCED CALCULATIONS
7/22	21:20	COMPLETED CALCULATIONS
7/22	21:30	PAPERWORK PLACED ON VESSEL AND VESSEL RELEASED
7/22	21:45	INSPECTOR DEPARTED

DELAYS AND STOPPAGES :

TIMES MARKED * ARE SUBMITTED TO US. TIME LOG PAGE : OF

Copyright SGS-OG&C June 1997 - Rev Oct 2003 Services rendered according to published General Terms and Conditions

CHECKED

F-3A

PORT / TERMINAL: Lake Charles, La / Citgo	OFFICE: LAKE CHARLES, LA TEL: (337) 625-1455
VESSEL: CCL 26 VOY #:	INSPECTOR(S): C. BUSBY
DATE: 7/21/2008	SGS FILE: 107438
CARGO: SULFIDIC CAUSTIC	CLIENT: CES Environmental REF: TBD

SGS

VOYAGE ANALYSIS REPORT

Oil Gas & Chemicals Services Division.

☑ LOADING ☐ V-V TRANSFER ☐ DISCHARGE ☐ SUMMARY

Type of Voyage	C/P DATE
Simple	

Load Port/Terminal/Berth	ARRIVED	SAILED	Discharge Port/Terminal/Berth	ARRIVED	SAILED
LAKE CHARLES / CITGO	7/21/2008	7/22/2008			

VOLUME UNITS	SUPPLIER	RECEIVER	VCF SHORE LOAD	VCF SHORE DISCH	VCF VESSEL LOAD	VCF VESSEL DISCH
☑ BBLS ☐ GALS ☐ M³ ☐ L	CITGO	CES ENV.	6B		6B	

DESCRIPTION		API	TCV	FW	GSV	S&W	NSV	Reference
I. COMPARISON OF SHORE QUANTITIES IN CUSTODY TRANSFER								
Bill of Lading	1.		8296.52	0.00	8296.52			(1)
Outturn	2.							(2)
Diff.	3.							(3)=(2) - (1)
Diff. %	4.							(4) = (3) / (1) x 100
Recalc. B/L	5.	(a)		Recalculate if B/L and O/T use different tables.				(5) (a) Vol. Diff.

II. VESSEL/SHORE QUANTITIES AT (1) LOAD PORT(S)								
Vessel	Sailing	A.	8338.95	0.00	8338.95	LIQUID	NON-LIQUID	(A)
	OBQ (All)	B.	18.02	0.00	18.02	18.02	0.00	(B)
	Loaded	C.	8320.93	0.00	8320.93			(C)=(A) - (B)
	Difference	D.	24.41	0.00	24.41			(D)=(C)-[(1) or (5)]
	Difference %	E.	0.29%		0.29%			(E)=(D)/[(1)or(5)]x100
Load Vessel Ratio		F.	1.0029					(F)=(C)/[(1)or(5)]
Load VEF		G.						(G)
Theoretical Shore		H.						(H)=(C) / (G)
Theoretical Shore Diff.		I.	-8296.52					(I)=(H) - [(1) or (5)]
Theoretical Shore Diff. %		J.	-100.00%					(J)=(I)/[(1) or (5)]x100

II. VESSEL/SHORE QUANTITIES AT ( ) DISCHARGE PORT(S)								
Vessel	Arrival	K.				LIQUID	NON-LIQUID	(K)
	ROB (All)	L.						(L)
	Discharged	M.						(M) = (K) - (L)
	Difference	N.						(N) = (2) - (M)
	Difference %	O.						(O) = (N) / (2) x 100
Discharge Vessel Ratio		P.						(P) = (M) / (2)
Discharge VEF		Q.						(Q)
Theoretical Shore		R.						(R) = (M) / (Q)
Theoretical Shore Diff.		S.						(S) = (2) - (R)
Theoretical Shore Diff. %		T.						(T) = (S) / (2) x 100

III. VESSEL/'S COMPARISON OF LOADING AND DISCHARGE PORT(S) VCF TABLE MUST BE CONSISTENT								
Transit	Difference	U.						(U) = (K) - (A)
	Difference %	V.				LIQUID	NON-LIQUID	(V) = (U) / (A) x 100
OBQ/ROB	Difference	W.						(W) = (L) - (B)

ADJ TCV DIFF :	TCV Difference (3) - OBQ (B) + ROB (L) (Quantity) / 0.00	[S&W(1)/GSV(1)]X100 S&W at Load Port :	[S&W(2)/GSV(2)]X100 S&W at Disch Port :

Comments :

Prepared by : C. BUSBY	Title : INSPECTOR	Company : SGS	Date Completed : 7/22/2008

Copyright SGS-OG&C June 1997 - Rev Oct 2003 Services rendered according to published General Terms and Conditions

F-2

PORT / TERMINAL: Lake Charles, La / Citgo	OFFICE: LAKE CHARLES, LA TEL: (337) 625-1455
VESSEL: CCL 26 VOY #:	INSPECTOR(S): C. BUSBY
DATE: 7/21/2008	SGS FILE: 107438
CARGO: SULFIDIC CAUSTIC	CLIENT: CES Environmental REF: TBD

SGS

VESSEL QUANTITY SUMMARY

Oil Gas & Chemicals Services Division.

☑ AT LOADING ☐ AT TRANSFER ☐ AT DISCHARGE ☐ CRUDE OIL ☑ PRODUCTS

☑ API @ 60°F : ☐ R.D. 60°F/60°F ☐ Density Lbs/Gal @

S&W % VOL:

SOURCE OF ANALYTICAL DATA:

	VOLUME		WCF (t 8)	WEIGHT		
	BBLS	U.S. GALS		POUNDS	LONG TONS	METRIC TONS (AIR)
VESSEL'S QUANTITIES	V.E.F. CORRECTED : ☐ YES ☑ NO VEF:					
TOTAL CALCULATED VOL	8338.95	350235.90				
FREE WATER	0.00	0.00				
GROSS STANDARD VOLUME	8338.95	350235.90				
S & W VOLUME						
(NET) STANDARD VOLUME						

☑ OBQ ☐ ROB

LIQUID MATERIAL	18.02	756.84				
NON-LIQUID MATERIAL	0.00	0.00				
FREE WATER	0.00	0.00				
TOTAL	18.02	756.84				

☑ LOADED QUANTITIES ☐ DISCHARGED QUANTITIES

TOTAL CALCULATED VOL	8320.93	349479.06				
FREE WATER	0.00	0.00				
GROSS STANDARD VOLUME	8320.93	349479.06				
S & W VOLUME						
(NET) STANDARD VOLUME			8.96200			

ARE SLOPS INCLUDED IN CALCULATIONS ☐ YES ☐ NO ☐ NO SLOPS ON BOARD

STOWAGE O/B VESSEL: 1-3 CENTER CARGO TANKS

REMARKS:

Copyright SGS-OG&C 1995 - Rev Oct 2003

Services rendered according to published General Terms and Conditions

CHECKED DATE 8/22/08

F-10 Page 1 of 2

PORT / TERMINAL: Lake Charles, La / Citgo		OFFICE LAKE CHARLES, LA	TEL (337) 625-1455
VESSEL CCL 26	VOY #	INSPECTOR(S): C. BUSBY	SGS FILE 107438
CARGO SULFIDIC CAUSTIC		CLIENT CES Environmental	REF TBD

SGS

SHORE TANK MEASUREMENTS (STATIC)

☑ AT LOADING ☐ AT TRANSFER ☐ AT DISCHARGE Oil Gas & Chemicals Services Division.

SHORETANK # 182 REF HEIGHT : FLOATING ROOF GAUGE UNITS ☑ FT - IN ☐ FT ☐ MM ☐ OTHER :

OPEN DATE : 7/21/2008 TIME : 10:30 CLOSE DATE : 7/22/2008 TIME : 2:30

OBS. REF. HEIGHT	§ INNAGE	¤ WATER INNAGE	OBS. REF. HEIGHT	§ INNAGE	¤ WATER INNAGE
30-6-5/16	28-0-5/8	0-0-0	11-10-1/4	0-0-0	6-4-5/8

§ MEASUREMENTS TAKEN IN ACCORDANCE WITH : INNAGE: API MPMS 3.1A.9.2

¤ FREE WATER DETERMINED IN ACCORDANCE WITH : API MPMS 3.1A.10.1

TEMPERATURES TAKEN IN ACCORDANCE WITH : API MPMS 7.6.4

^ VOLUME CALCULATED IN ACCORDANCE WITH : ASTM D 1250-04

PROD TEMP	92.9	x 0.875 =	81.2875	PROD TEMP	90.1	x 0.875 =	78.8375
(+) AIR TEMP	96.0	x 0.125 =	12.0000	(+) AIR TEMP	87.0	x 0.125 =	10.8750

TANK SHELLTEMPERATURE: = 93 TANK SHELL TEMPERATURE = 90

ROOF CORRECTION INFO - STANDARD API:

CRITICAL ZONE RANGE FROM TO ROOF LEG ☐ HIGH ☐ LOW

	OPEN	CLOSE
AVG INN/ULL IN CRITICAL ZONE	☐ YES ☑ NO	☐ YES ☑ NO
SIDEGAUGE/ATG		
TEMPERATURES °F	# ☑ PROBE ☐ MERCURY	# ☑ PROBE ☐ MERCURY
* ACTION TAKEN :	☐ U ☐ M ☐ L	☐ U ☐ M ☐ L
	☑ M 92.9	☑ M 90.1
	☐ OTHER*	☐ OTHER*
SIDETEMP/REMOTE	92.6	90.0
PROBE WAS CHECKED PRIOR TO USE	☑ YES ☐ NO ☐ NOT USED	
SAMPLING	☐ U ☐ M ☐ L	☐ U ☐ M ☐ L
* ACTION TAKEN :	☐ T ☐ B ☑ R	☐ T ☐ B ☐ R
	☐ OTHER*	☐ OTHER*
AT ULLAGES :		
CAL DATE :	Ref TSh Temp : 60	OP TEMP :

	OPEN	CLOSE
INSPECTOR:	C. BUSBY	C. BUSBY
WITNESS:		
API @ 60°F		
SOURCE		
AMBIENT AIR TEMP	96.0	87.0
TEMP OF TANK SHELL	93	90
AVG TEMP (0.5°F)	93.0	90.0
AVG INNAGE	28-0-5/8	9-5-0
AVG WATER INNAGE		
VOLUME UNITS ☑ BBLS ☐ M³ ☐ OTHER :		
TABLE VOLUME **	9004.97	2994.55
FREE WATER	0.00	0.00
OBSERVED VOLUME	9004.97	2994.55
TANK SHELL CORR.	1.00000	1.00000
OBSERVED VOLUME	9004.97	2994.55
ROOF CORRECTION	0.00	0.00
GROSS OBSERVED VOL.	9004.97	2994.55
^VCF TABLE : (t 6B)	1.00000	1.00000
GROSS STANDARD VOL.	9004.97	2994.55
DIFFERENCE	6010.42	
CUSTODY TRANSFER SAMPLE:		
API @ 60°F		
S & W % VOL.		
S & W VOLUME		
NET STANDARD VOLUME		
WCF TABLE : (t 8)		
GROSS STANDARD WT.		
NET STANDARD WEIGHT		
WEIGHT UNITS ☐ LT ☐ MT ☐ LBS ☐ OTHER :		
** IS TABLE VOLUME IN ☑ BBLS ☐ M³ ☐ OTHER :		

Copyright SGS-OG&C 2001 - Rev April 2005

Services rendered according to published General Terms and Conditions

CHECKED BY
DATE
BD 72400

PORT / TERMINAL: Lake Charles, La	/ Citgo	OFFICE LAKE CHARLES, LA	TEL (337) 625-1455
VESSEL CCL 26	VOY #	INSPECTOR(S): C. BUSBY	SGS FILE 107438
CARGO SULFIDIC CAUSTIC		CLIENT CES Environmental	REF TBD

SGS

SHORE TANK MEASUREMENTS (STATIC)

☑ AT LOADING ☐ AT TRANSFER ☐ AT DISCHARGE Oil Gas & Chemicals Services Division.

SHORETANK # 182 REF HEIGHT : FLOATING ROOF GAUGE UNITS ☑ FT - IN ☐ FT ☐ MM ☐ OTHER :

OPEN DATE : 7/22/2008 TIME : 14:15 CLOSE DATE : 7/22/2008 TIME : 20:45

OBS. REF. HEIGHT	§ INNAGE	¤ WATER INNAGE	OBS. REF. HEIGHT	§ INNAGE	¤ WATER INNAGE
21-0-0	18-6-3/16	0-0-0	13-10-3/4	11-5-1/8	0-0-0

§ MEASUREMENTS TAKEN IN ACCORDANCE WITH : INNAGE: API MPMS 3.1A.9.2

¤ FREE WATER DETERMINED IN ACCORDANCE WITH : API MPMS 3.1A.10.1

TEMPERATURES TAKEN IN ACCORDANCE WITH : API MPMS 7.6.4

^ VOLUME CALCULATED IN ACCORDANCE WITH : ASTM D 1250-04

PROD TEMP	93.4	x 0.875 = 81.7250	PROD TEMP	92.3	x 0.875 = 80.7625
(+) AIR TEMP	95.6	x 0.125 = 11.9500	(+) AIR TEMP	87.8	x 0.125 = 10.9750
TANK SHELLTEMPERATURE:		= 94	TANK SHELL TEMPERATURE		= 92

ROOF CORRECTION INFO - STANDARD API:

CRITICAL ZONE RANGE FROM TO ROOF LEG ☐ HIGH ☐ LOW

	OPEN	CLOSE
AVG INN/ULL IN CRITICAL ZONE	☐ YES ☑ NO	☐ YES ☑ NO
SIDEGAUGE/ATG		
TEMPERATURES °F	# ☑ PROBE ☐ MERCURY	# ☑ PROBE ☐ MERCURY
* ACTION TAKEN :	☐ U ☐ M ☐ L	☐ U ☐ M ☐ L
	☑ M 93.4	☑ M 92.3
	☐ OTHER*	☐ OTHER*
SIDETEMP/REMOTE		
PROBE WAS CHECKED PRIOR TO USE	☑ YES ☐ NO ☐ NOT USED	
SAMPLING	☐ U ☐ M ☐ L	☐ U ☐ M ☐ L
* ACTION TAKEN :	☐ T ☐ B ☑ R	☐ T ☐ B ☐ R
	☐ OTHER*	☐ OTHER*
AT ULLAGES :		
SEAL DATE :	Ref TSh Temp : 60	OP TEMP :

INSPECTOR:	C. BUSBY	C. BUSBY
WITNESS:		
API @ 60°F		
SOURCE		
AMBIENT AIR TEMP	95.6	87.8
TEMP OF TANK SHELL	94	92
AVG TEMP (0.5°F)	93.5	92.5
AVG INNAGE	18-6-3/16	11-5-1/8
AVG WATER INNAGE	0-0-0	0-0-0
VOLUME UNITS ☑ BBLS ☐ M³ ☐ OTHER :		
TABLE VOLUME **	5928.98	3642.88
FREE WATER	0.00	0.00
OBSERVED VOLUME	5928.98	3642.88
TANK SHELL CORR.	1.00000	1.00000
OBSERVED VOLUME	5928.98	3642.88
ROOF CORRECTION	0.00	0.00
GROSS OBSERVED VOL.	5928.98	3642.88
^VCF TABLE : (t 6B)	1.00000	1.00000
GROSS STANDARD VOL.	5928.98	3642.88
DIFFERENCE	2286.10	
CUSTODY TRANSFER SAMPLE:		
API @ 60°F		
S & W % VOL.		
S & W VOLUME		
NET STANDARD VOLUME		
WCF TABLE : (t 6)		
GROSS STANDARD WT.		
NET STANDARD WEIGHT		
WEIGHT UNITS ☐ LT ☐ MT ☑ LBS ☐ OTHER :		
** IS TABLE VOLUME IN ☑ BBLS ☐ M³ ☐ OTHER :		

CHECKED
DATE
BD 7-24-08

Copyright SGS-OG&C 2001 - Rev April 2005

Services rendered according to published General Terms and Conditions

MAY-20-2009 08:03 CES ENVIROMENTAL 7137488664 P.033

EPAPA010000695

F-15

PORT / TERMINAL: Lake Charles, La / Citgo		OFFICE: LAKE CHARLES, LA	TEL: (337) 625-1455
VESSEL: CCL 26	VOY #:	INSPECTOR(S): C. BUSBY	SGS FILE: 107438
DATE: 7/21/2008 CARGO: SULFIDIC CAUSTIC		CLIENT: CES Environmental	REF: TBD

SGS

VESSEL MEASUREMENT SYSTEM

☑ OPEN ☐ CLOSE / RESTRICTED

☐ ARRIVAL ☑ DEPARTURE

Oil Gas & Chemicals Services Division.

☑ AT LOADING ☐ AT TRANSHIPMENT ☐ AT DISCHARGE ☑ CARGO TANKS ☐ BALLAST TANKS ☐ NON/OTHER CARGO

UNITS: ☑ FT-IN ☐ FT ☐ MM ☐ OTHER: UNITS: ☑ BBLS ☐ U.S. GALS ☐ M³ ☐ OTHER:

TANK #	REFERENCE HEIGHT	OBSERVED REFERENCE HEIGHT	¤ INNAGE	WATER INN	TEMPERATURES °F § PROBE			AVG. TEMP	CORRECTED MEASURE	TOTAL OBSERVED VOLUME	FREE WATER	GROSS OBSERVED VOLUME	^ V.C.F. (t 6B)	GROSS STANDARD VOLUME	*
1C	16-2-1/2	16-2-1/2	11-9-3/4	0-0-0	91.7	91.9	92.4	92.0	11-9-3/4	2838.69	0.00	2838.69	1.00000	2838.69	C
2C	16-2-1/2	16-2-1/2	11-4-1/4	0-0-0	91.7	91.6	92.7	92.0	11-4-1/4	3126.57	0.00	3126.57	1.00000	3126.57	C
3C	16-2-3/4	16-2-3/4	9-7-1/2	0-0-0	92.2	92.2	92.3	92.2	9-7-1/2	2373.69	0.00	2373.69	1.00000	2373.69	C
TOTALS										8338.95	0.00	8338.95		8338.95	

PROBE WAS CHECKED PRIOR TO USE ☑ YES ☐ NO ☐ NOT USED

GAUGE LOCATION: ☑ STANDPIPE ☐ G.H. on Expansion Trunk ☐ OTHER:

* GAUGE POSITION: C = Center of tank F = Forward of Center A = Aft of Center

SAMPLES DRAWN: 2 x 1 QT PER TANK RUNNING

CORRECTED MEASURE: w = Wedge corrected, t = Trim corrected

API @ 60°F SOURCE:

S & W - VOL %: SOURCE:

S & W - VOL: WCF TABLE: (t 8)

NET STANDARD VOLUME	
GROSS STANDARD WEIGHT	
NET STANDARD WEIGHT	
TOTAL CALC. VOL. DEPARTURE	8338.95

BALLAST TANKS PERMANENT ☑ YES IF ☐ NO (SEE F-15 BALLAST TANKS)

SEASUCTION SEAL #'S:

DRAFT: FWD (P) 9-6 AFT (P) 9-6 LIST: 0.0 º (P) / (S)

(S) 9-6 (S) 9-6

SEA CONDITION: CALM IN PORT

REMARKS:

^ VOLUME CALCULATED IN ACCORDANCE WITH	ASTM D 1250-04
¤ LIQUID LEVEL GAUGES IN ACCORDANCE WITH	API MPMS 17.2.5.2
§ TEMPERATURE DETERMINATION IN ACCORDANCE WITH	API MPMS 17.2.5.3

VESSEL'S STAFF | C. BUSBY INSPECTOR

CHECKED DATE 07-24-08

Copyright SGS-OG&C 2001 - Rev April 2005

Services rendered according to published General Terms and Conditions

F-16

PORT / TERMINAL: Lake Charles, La / Citgo		OFFICE: LAKE CHARLES, LA	TEL: (337) 625-1455
VESSEL: CCL 26	VOY #:	INSPECTOR(S): C. BUSBY	SGS FILE: 107438
DATE: 7/21/2008 CARGO: SULFIDIC CAUSTIC		CLIENT: CES Environmental	REF: TBD

SGS

☑ OBQ ☐ ROB MEASUREMENT

NOTE: DO NOT USE V.C.F. IF TEMPERATURE IS NOT TAKEN

Oil Gas & Chemicals Services Division.

UNITS: ☐ FT-IN ☐ FT ☐ MM ☐ OTHER: | UNITS: ☑ BBLS ☐ U.S. GALS ☐ M³ ☐ OTHER:

TANK #	REFERENCE HEIGHT	OBSERVED REFERENCE HEIGHT	*	OBSERVED INNAGE	FREE WATER INNAGE	NON-LIQUID INNAGE	AVG. TEMP	CORRECTED MEASURE	TOTAL OBSERVED VOLUME	^ V.C.F. (t 6B)	FREE WATER VOLUME	NON-LIQUID VOLUME	LIQUID VOLUME
1C	16-2-1/2	16-2-1/2		0-1-0	0-0-0	0-0-0		0-1-0	18.02	1.00000	0.00	0.00	18.02
2C	16-2-1/2	16-2-1/2		0-0-0	0-0-0	0-0-0		0-0-0	0.00	1.00000	0.00	0.00	0.00
3C	16-2-3/4	16-2-3/4		0-0-0	0-0-0	0-0-0		0-0-0	0.00	1.00000	0.00	0.00	0.00
								TOTALS	18.02		0.00	0.00	18.02

^ VOLUME CALCULATED IN ACCORDANCE WITH ASTM D 1250-04

d = dip, u = Ullage; corrected measure, w = Wedge corrected, t = Trim corrected

GAUGE LOCATION: ☑ STANDPIPE ☐ G.H. on Expansion trunk ☐ OTHER:

* GAUGE POSITION: C = Center of tank F = Forward of Center A = Aft of Center

On behalf of our client(s) we would like to bring to your attention that in our opinion:

Bbls of LIQUID MATERIAL

Bbls of NON-LIQUID MATERIAL

remains on board your vessel. To the extent we are aware of contractual relationships, this material belongs to our client(s) and should be pumped ashore. In case you are unable to do so please indicate your reasons below. In any event, we have to advise our client(s) of the above and reserve his right to seek compensation for the undelivered amount. Statements with regards to flowability and similiar advisory services express personal opinions without responsibility for SGS.

OBQ SAMPLED ☐ YES ☑ NO IF NO REASON

OBQ TESTED ☐ YES ☑ NO IF NO REASON

ROB SAMPLED ☐ YES ☑ NO IF NO REASON

DRAFT: FWD (P) 1-3 AFT (P) 1-3 LIST: º (P) / (S)

(S) 1-3 (S) 1-3

CHECKED	C. BUSBY	SEA CONDITION: CALM IN PORT
VESSEL'S STAFF	INSPECTOR	

Copyright SGS-OG&C 1997 - Rev April 2005

Services rendered according to published General Terms and Conditions

07-24-08

F-7

PORT / TERMINAL: Lake Charles, La / Citgo	OFFICE: LAKE CHARLES, LA TEL: (337) 625-1455
VESSEL: CCL 26 VOY #:	INSPECTOR(S): C. BUSBY
DATE: 7/21/2008	SGS FILE: 107438
CARGO: SULFIDIC CAUSTIC	CLIENT: CES Environmental REF: TBD

SGS

INFORMATION FOR CLEANLINESS INSPECTION

Oil Gas & Chemicals Services Division.

☑ AT LOADING ☐ AT TRANSFER ☐ AT DISCHARGE ☐ SHORE ☑ VESSEL

THE INFORMATION ON THIS LIRIS F-7 WILL BE USED TO COMPLETE LIRIS F-9 WAS SUBMITTED TO US BY THE PERSON(S) INDICATED BELOW

WE CONSULTED FOR TANK INSPECTION ON (DATE) 7/21/2008 (TIME) 9:15 WITH:

☐ VESSEL'S STAFF ☐ BARGE OPERATOR ☑ TERMINAL REPRESENTATIVE ☐ CHARTERER

☐ OTHER (SPECIFY):

PLEASE PRINT NAME(S)

TANK MATERIAL:

TANK #:	1-3 CENTER				
MATERIAL	MILD STEEL				
COATING NAME	N/A				
APPARENT CONDITION *	ACCEPTABLE				
TANK #:					
MATERIAL					
COATING NAME					
APPARENT CONDITION *					

COATING WAS CHECKED AGAINST ☐ MANUFACTURERS ☐ OTHER (SPECIFY) CHECKLIST

IF NOT CHECKED, REASO

* SELECT: e.g. % MISSING % DISCOLORED %PEELING ACCEPTABLE etc. (ALL PERCENTAGES ARE APPROXIMATIONS)

OUR INSPECTION FOR F-9 COVERS THE CLEANLINESS OF THE COATINGS, NOT ITS SUITABILITY IN REGARD TO CARGO CONTAMINATION.

PREVIOUS CARGOES:

TANK#	THIRD LAST	SECOND LAST	LAST	COMPATIBLE
1-3 CENTER	UNKNOWN	UNKNOWN	CAUSTIC SODA	☑ YES ☐ NO
				☐ YES ☐ NO
				☐ YES ☐ NO
				☐ YES ☐ NO
				☐ YES ☐ NO
				☐ YES ☐ NO
				☐ YES ☐ NO
				☐ YES ☐ NO

LINES - PUMPS:

NAME	MATERIAL	LAST USED FOR	PRESSED WITH INERT GAS/AIR
			☐ YES ☐ NO PRESSURE
			☐ YES ☐ NO PRESSURE
			☐ YES ☐ NO PRESSURE
			☐ YES ☐ NO PRESSURE
			☐ YES ☐ NO PRESSURE

THE CLEANLINESS CONDITION OF THE CARGO PUMPS AND LINES CANNOT BE ASCERTAINED BY VISUAL EXAMINATION. IT IS RECOMMENDED TO TEST "LINE" SAMPLES PRIOR TO COMMENCING THE TRANSFER AND "FIRST-IN" SAMPLES AT THE START OF THE TRANSFER TO MINIMIZE CARGO CONTAMINATION.

VESSEL REPRESENTATIVE

C. BUSBY
INSPECTOR

Copyright SGS-OG&C 1995 - Rev Oct 2003

Services rendered according to published General Terms and Conditions

CHECKED DATE 7/21/08

F-9

PORT / TERMINAL: Lake Charles, La / Citgo	OFFICE: LAKE CHARLES, LA TEL: (337) 625-1455
VESSEL: CCL 26 VOY #:	INSPECTOR(S): C. BUSBY
DATE: 7/21/2008	SGS FILE: 107438
CARGO: SULFIDIC CAUSTIC	CLIENT: CES Environmental REF: TBD

SGS

TANK CLEANLINESS INSPECTION

Oil Gas & Chemicals Services Division.

☑ AT LOADING ☐ AT TRANSFER ☐ AT DISCHARGE

☐ AS INSPECTION ONLY ☐ AS PRE-INSPECTION ☑ WITH CUSTODY TRANSFER

USE A SEPARATE FORM F-9 PER INSPECTION

THIS IS THE ☑ FIRST ☐ SECOND ☐ THIRD _____ TH INSPECTION

TANK(S): 1-3 CENTER

BASED ON SUBMITTED INFORMATION (SEE LIRIS F-7) AND :

☐ VISUAL CHECK FOR RESIDUES FROM DECKLEVEL (SEE LIRIS F-15 OR F-20)
☑ MEASURING OF RESIDUES FROM DECK LEVEL (SEE LIRIS F-16)
☐ PHYSICAL ENTRY (TANK SAFE ATMOSPHERE STATEMENT BELOW MUST BE COMPLETED PRIOR TO ENTRY)

AND ☐ VISUAL INSPECTION
AND ☐ WALLWASHING (ANALYTICAL REPORT ON FILE)
AND ☐ TESTING OF HEATING COILS

☑ WERE ACCEPTED FOR CLEANLINESS TO CARRY A CARGO OF SULFIDIC CAUSTIC

☐ WERE REJECTED FOR CLEANLINESS TO CARRY A CARGO OF _____

REASON : _____

☐ SHIP'S STAFF AND/OR ☐ SGS SUPERVISOR AND/OR ☐ CLIENT NOTIFIED ON BY

☑ INSPECTION COMPLETED AT 9:35 HRS ON THE 7/21/2008

☐ TANK(S) SUBJECT TO A FINAL INSPECTION AT LOADING BERTH IN CASE OF PRE-INSPECTION

SIGNATURES : _____ FOR VESSEL _____ FOR TERMINAL C. BUSBY INSPECTOR

* IS THIS TANK ACCEPTANCE BASED SOLELY ON SUBMITTED INFORMATION EVALUATION ? ☐ YES ☐ NO

IF YES; ISSUE N.O.A.D. AND INFORM YOUR ☐ SGS SUPERVISOR AND/OR ☐ CLIENT(S) IMMEDIATELY.

TANK SAFE ATMOSPHERE STATEMENT

The undersigned certifies that those tank(s) indicated on line 13 of this page have been cleaned and gas freed as reported on the reverse side of the SGS F-7 and that the tank(s) in question are in all respects safe for entry. The undersigned hereby grants permission for SGS personnel to enter said tanks.

Tank Safe Atmosphere Statement signed _____ hours on _____

SIGNATURES : _____ FOR VESSEL _____ FOR TERMINAL

PRINT NAME (S) : _____ _____

NOTE: DO NOT ENTER THE TANK(S) if this TANK SAFE ATMOSPHERE STATEMENT is not signed and contact your supervisor for further instructions.

Copyright SGS-OG&C 1995 - Rev Oct 2003 Services rendered according to published General Terms and Conditions

CHECKED DATE 8-24-08

SGS

NOT UNLOADED @ P.A.

Inspection Report (LOADING)

Subject : CCL 26
Product : SPENT CAUSTIC
Client ref.: TBD

Date : 9/5/2008
Location : Lake Charles, La / CITGO
Client : CES ENVIRONMENTAL SERVICES

Our ref.: 112532

Summary of Figures

		Bbls @ 60°F	Gallons @ 60°F	Long Tons	Metric Tonnes	Pounds
Shore Measurements						
Total Shore figures delivered	GSV	9,087.63	381,680.46			
Average API Gravity @ 60°F						
Shoretanks no(s):	ST 182, ST 182					
Vessel's Measurements						
Vessel's figures before loading (OBQ) Free Water		0.00				
Vessel's figures before loading (OBQ)	Liquid	18.02				
Vessel's figures before loading (OBQ) Non Liquid		0.00				
Vessel's figures before loading (OBQ).	Total	18.02	756.84			
Vessel's figures TCV on board after loading		9,129.96	383,458.32			
Vessel's figures TCV loaded		9,111.94	382,701.48			
Vessel's figures Free Water loaded		0.00	0.00			
Vessel's figures GSV loaded		9,111.94	382,701.48			

Cargo stowage Cargo tanks no(s): CCL 26[1C, 2C, 3C],

Samples

Shore Tank – 2x1 Quart running
Vessel – 2x1 Quart running on completion of load

Quality

NONE

Time Log

8/26/2008	0820	INSPECTOR NOTIFIED
	0825	VESSEL ARRIVED
	0840	VESSEL ALL-FAST
	0900	INSPECTOR ARRIVED
	0930	ST 182 GUAGED, TEMPERATURED, SAMPLED, AND OPENED
	0945	COMMENCED PRE LOADING DECK INSPECTION
	1015	PRE LOADING DECK INSPECTION COMPLETE
	1130	1 X 8 IN CARGO HOSE CONNECTED
	1145	COMMENCED LOADING
	2100	INSPECTOR NOTIFIED
	2200	INSPECTOR ARRIVED
	2320	COMMENCED POST LOADING DECK INSPECTION--LOADING COMPLETE
	2340	COMPLETED POST LOADING DECK INSPECTION

SGS North America Inc. | Oil, Gas & Chemicals Services
4701 E. NAPOLEON SULPHUR, LA 70663 t((337) 625-1455) f((337) 625-1721) www.sgs.com

Member of the SGS Group (Société Générale de Surveillance)

SGS

	2340	CARGO HOSE DISCONNECTED
	2345	COMMENCED CALCULATIONS
	2355	COMPLETED CALCULATIONS
8/27/2008	0005	ST 182 GUAGED, TEMPERATURED, AND CLOSED
	0020	INSPECTOR DEPARTED
9/4/2008	1500	VESSEL ARRIVED
	1500	INSPECTOR NOTIFIED
	1510	VESSEL ALL FAST
	1600	INSPECTOR ARRIVED
	1610	COMMENCED PRELOAD DECK INSPECTION
	1630	COMPLETED PRELOAD DECK INSPECTION
	1640	OPENED ST 182
	1940	1X8 CARGO HOSE CONNECTED
	2000	STARTED LOADING
9/5/2008	0800	INSPECTOR NOTIFIED
	0900	INSPECTOR ARRIVED
	0900	COMPLETED LOADING
	0910	COMMENCED POSTLOAD DECK INSPECTION
	0915	1X8 HOSE OFF
	0945	COMPLETED POSTLOAD DECK INSPECTION
	1040	COMMENCED CALCULATIONS
	1200	COMPLETED CALCULATIONS
	1245	INSPECTOR DEPARTED

Brett Daigle
for SGS Oil, Gas & Chemicals Services
9/8/2008

Shore volume calculated in accordance with: ASTM D 1250-04
Vessel volume calculated in accordance with: ASTM D 1250-04
Procedures as per applicable MPMS Chapter 3.1a, 7, 8.1 or 8.2, 12.1 or 12.2, 17.1, 17.2, 17.4.

Disclaimer

This document is issued by the Company under its General Conditions of Service accessible at http://www.sgs.com/terms_and_conditions.htm. The Client's attention is drawn to the limitation of liability, indemnification and jurisdiction issues defined therein.

Any other holder of this document is advised that information contained hereon reflects the Company's findings at the time of its intervention only and within the limits of Client's instructions, if any. The Company's sole responsibility is to its Client and this document does not exonerate parties to a transaction from exercising all their rights and obligations under the transaction documents. Any unauthorized alteration, forgery or falsification of the content or appearance of this document is unlawful and offenders may be prosecuted to the fullest extent of the law.
FIRCC REV January 2007

F-4

PORT / TERMINAL: Lake Charles, La / Citgo	OFFICE: LAKE CHARLES, LA TEL: (337) 625-1455
VESSEL: CCL 26 VOY #:	INSPECTOR(S): C. BUSBY
DATE: 8/26/2008	SGS FILE: 112532
CARGO: Spent Caustic	CLIENT: CITGO/CES REF:

SGS

TIME LOG

Oil Gas & Chemicals Services Division.

☑ AT LOADING ☐ AT TRANSFER ☐ AT DISCHARGE

YEAR 2008 / MONTH JAN FEB MAR APR MAY JUN JUL AUG SEP OCT NOV DEC

Date	Hour	
8/26	08:20	INSPECTOR NOTIFIED
8/26	08:25	VESSEL ARRIVED
8/26	08:40	VESSEL ALL-FAST
8/26	09:00	INSPECTOR ARRIVED
8/26	09:30	ST 182 GUAGED, TEMPERATURED, SAMPLED, AND OPENED
8/26	09:45	COMMENCED PRE LOADING DECK INSPECTION
8/26	10:15	PRE LOADING DECK INSPECTION COMPLETE
8/26	11:30	1 X 8 IN CARGO HOSE CONNECTED
8/26	11:45	COMMENCED LOADING
8/26	21:00	INSPECTOR NOTIFIED
8/26	22:00	INSPECTOR ARRIVED
8/26	23:20	COMMENCED POST LOADING DECK INSPECTION--LOADING COMPLETE
8/26	23:40	COMPLETED POST LOADING DECK INSPECTION
8/26	23:40	CARGO HOSE DISCONNECTED
8/26	23:45	COMMENCED CALCULATIONS
8/26	23:55	COMPLETED CALCULATIONS
8/27	00:05	ST 182 GUAGED, TEMPERATURED, AND CLOSED
8/27	00:20	INSPECTOR DEPARTED
9/4	15:00	VESSEL ARRIVED
9/4	15:00	INSPECTOR NOTIFIED
9/4	15:10	VESSEL ALL FAST
9/4	16:00	INSPECTOR ARRIVED
9/4	16:10	COMMENCED PRELOAD DECK INSPECTION
9/4	16:30	COMPLETED PRELOAD DECK INSPECTION
9/4	16:40	OPENED ST 182
9/4	19:40	1X8 CARGO HOSE CONNECTED
9/4	20:00	STARTED LOADING
9/5	08:00	INSPECTOR NOTIFIED
9/5	09:00	INSPECTOR ARRIVED
9/5	09:00	COMPLETED LOADING
9/5	09:10	COMMENCED POSTLOAD DECK INSPECTION
9/5	09:15	1X8 HOSE OFF
9/5	09:45	COMPLETED POSTLOAD DECK INSPECTION
DELAYS AND STOPPAGES :		

TIMES MARKED * ARE SUBMITTED TO US.

TIME LOG PAGE 1 OF 2

Copyright SGS-OG&C June 1997 - Rev Oct 2003

Services rendered according to published General Terms and Conditions

RECEIVED DATE 8/26/08

F-4 Page 2 of 2

PORT / TERMINAL: Lake Charles, La / Citgo		OFFICE: LAKE CHARLES, LA	TEL: (337) 625-1455
VESSEL: CCL 26	VOY #:	INSPECTOR(S): C. BUSBY	
DATE: 8/26/2008		SGS FILE: 112532	
CARGO: Spent Caustic		CLIENT: CITGO/CES	REF:

SGS

TIME LOG

Oil Gas & Chemicals Services Division.

☑ AT LOADING ☐ AT TRANSFER ☐ AT DISCHARGE

YEAR 2008 / MONTH JAN FEB MAR APR MAY JUN JUL AUG SEP OCT NOV DEC

Date	Hour	
9/5	10:40	COMMENCED CALCULATIONS
9/5	12:00	COMPLETED CALCULATIONS
9/5	12:45	INSPECTOR DEPARTED

DELAYS AND STOPPAGES :

TIMES MARKED * ARE SUBMITTED TO US. TIME LOG PAGE 2 OF 2

Copyright SGS-OG&C June 1997 - Rev Oct 2003 Services rendered according to published General Terms and Conditions

RECEIVED DATE 5/28/09

F-3A

PORT / TERMINAL: Lake Charles, La / Citgo	OFFICE: LAKE CHARLES, LA TEL: (337) 625-1455
VESSEL: CCL 26 VOY #:	INSPECTOR(S): C. BUSBY
DATE: 8/26/2008	SGS FILE: 112532
CARGO: Spent Caustic	CLIENT: CITGO/CES REF: TBD

SGS

VOYAGE ANALYSIS REPORT

Oil Gas & Chemicals Services Division.

☑ LOADING	☐ V-V TRANSFER	☐ DISCHARGE	☐ SUMMARY	Type of Voyage	C/P DATE
				Simple	

Load Port/Terminal/Berth	ARRIVED	SAILED	Discharge Port/Terminal/Berth	ARRIVED	SAILED
LAKE CHARLES/CITGO	8/26/2008	8/27/2008			

VOLUME UNITS	SUPPLIER	RECEIVER	VCF SHORE LOAD	VCF SHORE DISCH	VCF VESSEL LOAD	VCF VESSEL DISCH
☑ BBLS ☐ GALS ☐ M³ ☐ L	CITGO	CES ENV.				

DESCRIPTION	API	TCV	FW	GSV	S&W	NSV	Reference
I. COMPARISON OF SHORE QUANTITIES IN CUSTODY TRANSFER							
Bill of Lading 1.		9087.63	0.00	9087.63			(1)
Outturn 2.							(2)
Diff. 3.							(3)=(2) - (1)
Diff. % 4.							(4) = (3) / (1) x 100
Recalc. B/L 5.	(a)		Recalculate if B/L and O/T use different tables.				(5) (a) Vol. Diff.

II. VESSEL/SHORE QUANTITIES AT (1) LOAD PORT(S)							
Vessel	Sailing A.	9129.96	0.00	9129.96	LIQUID	NON-LIQUID	(A)
	OBQ (All) B.	18.02	0.00	18.02	18.02	0.00	(B)
	Loaded C.	9111.94	0.00	9111.94			(C)=(A) - (B)
	Difference D.	24.31	0.00	24.31			(D)=(C)-[(1) or (5)]
	Difference % E.	0.27%		0.27%			(E)=(D)/[(1)or(5)]x100
Load Vessel Ratio	F.	1.0027					(F)=(C)/[(1)or(5)]
Load VEF	G.						(G)
Theoretical Shore	H.						(H)=(C) / (G)
Theoretical Shore Diff.	I.	-9087.63					(I)=(H) - [(1) or (5)]
Theoretical Shore Diff. %	J.	-100.00%					(J)=(I)/[(1) or (5)]x100

II. VESSEL/SHORE QUANTITIES AT ( ) DISCHARGE PORT(S)							
Vessel	Arrival K.				LIQUID	NON-LIQUID	(K)
	ROB (All) L.						(L)
	Discharged M.						(M) = (K) - (L)
	Difference N.						(N) = (2) - (M)
	Difference % O.						(O) = (N) / (2) x 100
Discharge Vessel Ratio	P.						(P) = (M) / (2)
Discharge VEF	Q.						(Q)
Theoretical Shore	R.						(R) = (M) / (Q)
Theoretical Shore Diff.	S.						(S) = (2) - (R)
Theoretical Shore Diff. %	T.						(T) = (S) / (2) x 100

III. VESSEL/'S COMPARISON OF LOADING AND DISCHARGE PORT(S) VCF TABLE MUST BE CONSISTENT							
Transit	Difference U.						(U) = (K) - (A)
	Difference % V.				LIQUID	NON-LIQUID	(V) = (U) / (A) x 100
OBQ/ROB	Difference W.						(W) = (L) - (B)

ADJ TCV DIFF : TCV Difference (3) - OBQ (B) + ROB (L) (Quantity) / 0.00	S&W at Load Port : [S&W(1)/GSV(1)]X100	S&W at Disch Port : [S&W(2)/GSV(2)]X100

Comments :

Prepared by : MIKE ELLIOTT	Title : INSPECTOR	Company : SGS	Date Completed : 9/5/2008

Copyright SGS-OG&C June 1997 - Rev Oct 2003 Services rendered according to published General Terms and Conditions

F-2 Page 1 of 1

PORT / TERMINAL: Lake Charles, La / Citgo	OFFICE: LAKE CHARLES, LA TEL: (337) 625-1455
VESSEL: CCL 26 VOY #:	INSPECTOR(S): C. BUSBY
DATE: 8/26/2008	SGS FILE: 112532
CARGO: Spent Caustic	CLIENT: CITGO/CES REF: TBD

SGS

VESSEL QUANTITY SUMMARY

Oil Gas & Chemicals Services Division.

☑ AT LOADING ☐ AT TRANSFER ☐ AT DISCHARGE ☐ CRUDE OIL ☑ PRODUCTS

☐ API @ 60°F : ☐ R.D. 60°F/60°F ☐ Density Lbs/Gal @

S&W % VOL:

SOURCE OF ANALYTICAL DATA: CITGO

	VOLUME		WCF (t 8)	WEIGHT		
	BBLS	U.S. GALS		POUNDS	LONG TONS	METRIC TONS (AIR)
VESSEL'S QUANTITIES	V.E.F. CORRECTED : ☐ YES ☑ NO VEF:					
TOTAL CALCULATED VOL	9129.96	383458.32				
FREE WATER	0.00	0.00				
GROSS STANDARD VOLUME	9129.96	383458.32				
S & W VOLUME						
(NET) STANDARD VOLUME						

☑ OBQ ☐ ROB

LIQUID MATERIAL	18.02	756.84				
NON-LIQUID MATERIAL	0.00	0.00				
FREE WATER	0.00	0.00				
TOTAL	18.02	756.84				

☑ LOADED QUANTITIES ☐ DISCHARGED QUANTITIES

TOTAL CALCULATED VOL	9111.94	382701.48				
FREE WATER	0.00	0.00				
GROSS STANDARD VOLUME	9111.94	382701.48				
S & W VOLUME						
(NET) STANDARD VOLUME						

ARE SLOPS INCLUDED IN CALCULATIONS ☐ YES ☑ NO ☐ NO SLOPS ON BOARD

STOWAGE O/B VESSEL: 1-3 C

REMARKS:

Copyright SGS-OG&C 1995 - Rev Oct 2003 Services rendered according to published General Terms and Conditions

F-1 Page # of #

PORT / TERMINAL: Lake Charles, La / Citgo	OFFICE LAKE CHARLES, LA TEL (337) 625-1455
VESSEL CCL 26 VOY #	INSPECTOR(S): C. BUSBY
DATE 8/26/2008	SGS FILE 112532
CARGO Spent Caustic	CLIENT CITGO/CES REF

SGS

SHORE QUANTITY SUMMARY

Oil Gas & Chemicals Services Division.

☑ AT LOADING ☐ AT TRANSFER ☐ AT DISCHARGE | ☑ SHORE TANK (STATIC) ☐ METER (DYNAMIC)

CUSTODY TRANSFER SAMPLE

☑ API @ 60ºF : ☐ R.D. 60ºF/60ºF ☐ Density Lbs/Gal @

S&W % VOL:

SOURCE OF ANALYTICAL DATA: CITGO

	UNITS	ST 182	ST 182			
TOTAL CALCULATED VOLUME	BBLS	4817.54	4270.09			
FREE WATER	BBLS	0.00	0.00			
GROSS STANDARD VOLUME	BBLS	4817.54	4270.09			
S & W VOLUME	BBLS					
(NET) STANDARD VOLUME	BBLS					
WCF TABLE (1 8)						
GROSS STANDARD WEIGHT						
S & W WEIGHT						
(NET) STANDARD WEIGHT						

	UNITS			SHORELINE	TOTAL DELIVERED
TOTAL CALCULATED VOLUME	BBLS				9087.63
FREE WATER	BBLS				0.00
GROSS STANDARD VOLUME	BBLS				9087.63
S & W VOLUME	BBLS				
(NET) STANDARD VOLUME	BBLS				
					☑ GSV ☐ NSV ☐ SV @
GROSS STANDARD WEIGHT					
S & W WEIGHT					
(NET) STANDARD WEIGHT					

STOWAGE O/B VESSEL: 1-C CENTER CARGO TANKS

B/L DATE: 8/27/2008

REMARKS	QUANTITY CONFIRMED	QUANTITY CHANGES	YES	NO	IF YES STATE REASON
with	of				
with	of				
Date	Time				

Copyright SGS-OG&C June 1997 - Rev Oct 2003

Services rendered according to published General Terms and Conditions

F-10 Page 1 of 2

PORT / TERMINAL: Lake Charles, La	/ Citgo	OFFICE LAKE CHARLES, LA	TEL (337) 625-1455
VESSEL CCL 26	VOY #	INSPECTOR(S): C. BUSBY	SGS FILE 112532
CARGO Spent Caustic		CLIENT CITGO/CES	REF

SGS

SHORE TANK MEASUREMENTS (STATIC)

☑ AT LOADING ☐ AT TRANSFER ☐ AT DISCHARGE Oil Gas & Chemicals Services Division.

SHORETANK # 182 REF HEIGHT : GAUGE UNITS ☑ FT - IN ☐ FT ☐ MM ☐ OTHER :

OPEN DATE : 8/26/2008 TIME : 9:30 CLOSE DATE : 8/27/2008 TIME : 0:05

OBS. REF. HEIGHT	§ INNAGE	¤ WATER INNAGE	OBS. REF. HEIGHT	§ INNAGE	¤ WATER INNAGE
26-0-3/4	23-7-0	0-0-0	11-2-1/4	8-8-1/2	0-0-0

§ MEASUREMENTS TAKEN IN ACCORDANCE WITH : INNAGE: API MPMS 3.1A.9.2

¤ FREE WATER DETERMINED IN ACCORDANCE WITH : API MPMS 3.1A.10.1

TEMPERATURES TAKEN IN ACCORDANCE WITH : API MPMS 7.6.4

^ VOLUME CALCULATED IN ACCORDANCE WITH : ASTM D 1250-04

PROD TEMP	87.2	x 0.875 = 76.3000	PROD TEMP	87.1	x 0.875 = 76.2125
(+) AIR TEMP	85.0	x 0.125 = 10.6250	(+) AIR TEMP	78.0	x 0.125 = 9.7500
TANK SHELLTEMPERATURE:		= 87	TANK SHELL TEMPERATURE		= 86

ROOF CORRECTION INFO - STANDARD API:

CRITICAL ZONE RANGE FROM TO ROOF LEG ☐ HIGH ☐ LOW

	OPEN	CLOSE
AVG INN/ULL IN CRITICAL ZONE	☐ YES ☑ NO	☐ YES ☑ NO
SIDEGAUGE/ATG	23-5-0 23-5-0	8-6-15 8-5-16
TEMPERATURES °F	# ☑ PROBE ☐ MERCURY	# ☐ PROBE ☐ MERCURY
* ACTION TAKEN :	☑ U 87.2 ☑ M 87.2 ☑ L 87.2	☑ U 87.1 ☑ M 87.1 ☑ L 87.1
	☐ M	☐ M
	☐ OTHER*	☐ OTHER*
SIDETEMP/REMOTE	88.8	88.0
PROBE WAS CHECKED PRIOR TO USE	☑ YES ☐ NO ☐ NOT USED	
SAMPLING	☐ U ☐ M ☐ L	☐ U ☐ M ☐ L
* ACTION TAKEN :	☐ T ☐ B ☑ R	☐ T ☐ B ☐ R
	☐ OTHER*	☐ OTHER*
AT ULLAGES :		
CAL DATE : 10/6/2000	Ref TSh Temp : 60	OP TEMP :

INSPECTOR:	C. BUSBY	C. BUSBY
WITNESS:		
API @ 60°F		
SOURCE		
AMBIENT AIR TEMP	85.0	78.0
TEMP OF TANK SHELL	87	86
AVG TEMP (0.1°F)	87.0	87.0
AVG INNAGE	23-7-0	8-8-1/2
AVG WATER INNAGE	0-0-0	0-0-0
VOLUME UNITS	☑ BBLS ☐ M³ ☐ OTHER :	
TABLE VOLUME **	7583.65	2766.11
FREE WATER	0.00	0.00
OBSERVED VOLUME	7583.65	2766.11
TANK SHELL CORR.	1.00000	1.00000
OBSERVED VOLUME	7583.65	2766.11
ROOF CORRECTION	0.00	0.00
GROSS OBSERVED VOL.	7583.65	2766.11
^VCF TABLE : (t 6B)	1.00000	1.00000
GROSS STANDARD VOL.	7583.65	2766.11
DIFFERENCE	4817.54	
CUSTODY TRANSFER SAMPLE:		
API @ 60°F		
S & W % VOL.		
S & W VOLUME		
NET STANDARD VOLUME		
WCF TABLE : (t 8)	1.00000	1.00000
GROSS STANDARD WT.	318513.300	116176.620
NET STANDARD WEIGHT		
WEIGHT UNITS	☐ LT ☐ MT ☑ LBS ☐ OTHER :	
** IS TABLE VOLUME IN	☑ BBLS ☐ M³ ☐ OTHER :	

Copyright SGS-OG&C 2001 - Rev April 2005

Services rendered according to published General Terms and Conditions

F-10 Page 2 of 2

PORT / TERMINAL: Lake Charles, La	/ Citgo	OFFICE LAKE CHARLES, LA	TEL (337) 625-1455
VESSEL CCL 26	VOY #	INSPECTOR(S): C. BUSBY	SGS FILE 112532
CARGO Spent Caustic		CLIENT CITGO/CES	REF

SGS

SHORE TANK MEASUREMENTS (STATIC)

☑ AT LOADING ☐ AT TRANSFER ☐ AT DISCHARGE Oil Gas & Chemicals Services Division.

SHORETANK # 182 REF HEIGHT : GAUGE UNITS ☑ FT - IN ☐ FT ☐ MM ☐ OTHER :

OPEN DATE : 9/4/2008 TIME : 16:40 CLOSE DATE : 9/5/2008 TIME : 10:40

OBS. REF. HEIGHT	§ INNAGE	¤ WATER INNAGE	OBS. REF. HEIGHT	§ INNAGE	¤ WATER INNAGE
27-9-5/8	25-3-7/8	0-0	14-6-1/2	12-1-0	0-0

§ MEASUREMENTS TAKEN IN ACCORDANCE WITH : INNAGE: API MPMS 3.1A.9.2

¤ FREE WATER DETERMINED IN ACCORDANCE WITH : API MPMS 3.1A.10.1

TEMPERATURES TAKEN IN ACCORDANCE WITH : API MPMS 7.6.4

^ VOLUME CALCULATED IN ACCORDANCE WITH : ASTM D 1250-04

PROD TEMP	88.4	x 0.875 =	77.3500	PROD TEMP	87.5	x 0.875 =	76.5625
(+) AIR TEMP	82.0	x 0.125 =	10.2500	(+) AIR TEMP	83.0	x 0.125 =	10.3750

TANK SHELLTEMPERATURE: = 88 TANK SHELL TEMPERATURE = 87

ROOF CORRECTION INFO - STANDARD API:

CRITICAL ZONE RANGE FROM TO ROOF LEG ☐ HIGH ☐ LOW

	OPEN	CLOSE
AVG INN/ULL IN CRITICAL ZONE	☐ YES ☑ NO	☐ YES ☐ NO
SIDEGAUGE/ATG	25-1-5/16 25-1-3/16	11-10-2/16 11-10-1/4
TEMPERATURES °F	# ☑ PROBE ☐ MERCURY	# ☑ PROBE ☐ MERCURY
* ACTION TAKEN :	☐ U ☑ M 88.4 ☐ L	☐ U ☑ M 87.5 ☐ L
	☐ M	☐ M
	☐ OTHER*	☐ OTHER*
SIDETEMP/REMOTE		
PROBE WAS CHECKED PRIOR TO USE	☑ YES ☐ NO ☐ NOT USED	
SAMPLING	☐ U ☐ M ☐ L	☐ U ☐ M ☐ L
* ACTION TAKEN :	☐ T ☐ B ☐ R	☐ T ☐ B ☐ R
	☐ OTHER*	☐ OTHER*
AT ULLAGES :		
CAL DATE :	Ref TSh Temp : 60	OP TEMP :

	OPEN	CLOSE
INSPECTOR:	MIKE ELLIOTT	MIKE ELLIOTT
WITNESS:		
API @ 60°F		
SOURCE		
AMBIENT AIR TEMP	82.0	83.0
TEMP OF TANK SHELL	88	87
AVG TEMP (0.1°F)	88.4	87.5
AVG INNAGE	25-3-7/8	12-1-0
AVG WATER INNAGE		
VOLUME UNITS ☑ BBLS ☐ M³ ☐ OTHER :		
TABLE VOLUME **	8124.61	3854.52
FREE WATER	0.00	0.00
OBSERVED VOLUME	8124.61	3854.52
TANK SHELL CORR.	1.00000	1.00000
OBSERVED VOLUME	8124.61	3854.52
ROOF CORRECTION	0.00	0.00
GROSS OBSERVED VOL.	8124.61	3854.52
^VCF TABLE : (t 6B)	1.00000	1.00000
GROSS STANDARD VOL.	8124.61	3854.52
DIFFERENCE	4270.09	
CUSTODY TRANSFER SAMPLE:		
API @ 60°F/ DE		
S & W % VOL.		
S & W VOLUME		
NET STANDARD VOLUME		
WCF TABLE : (t 8)	1.00000	
GROSS STANDARD WT.	341233.620	
NET STANDARD WEIGHT		
WEIGHT UNITS ☐ LT ☐ MT ☐ LBS ☐ OTHER :		
** IS TABLE VOLUME IN ☑ BBLS ☐ M³ ☐ OTHER :		

Copyright SGS-OG&C 2001 - Rev April 2005

Services rendered according to published General Terms and Conditions

F-15

PORT / TERMINAL: Lake Charles, La / Citgo		OFFICE: LAKE CHARLES, LA	TEL: (337) 625-1455
VESSEL: CCL 26	VOY #:	INSPECTOR(S): C. BUSBY	SGS FILE: 112532
DATE: 9/4/2008 CARGO: Spent Caustic		CLIENT: CITGO/CES	REF: TBD

SGS

VESSEL MEASUREMENT SYSTEM

☑ OPEN ☐ CLOSE / RESTRICTED

☐ ARRIVAL ☑ DEPARTURE

Oil Gas & Chemicals Services Division.

☑ AT LOADING ☐ AT TRANSHIPMENT ☐ AT DISCHARGE ☐ CARGO TANKS ☐ BALLAST TANKS ☐ NON/OTHER CARGO

UNITS : ☑ FT-IN ☐ FT ☐ MM ☐ OTHER : UNITS : ☑ BBLS ☐ U.S. GALS ☐ M³ ☐ OTHER :

TANK #	REFERENCE HEIGHT	OBSERVED REFERENCE HEIGHT	¤ INNAGE	WATER INN	TEMPERATURES °F § PROBE	AVG. TEMP	CORRECTED MEASURE	TOTAL OBSERVED VOLUME	FREE WATER	GROSS OBSERVED VOLUME	^ V.C.F. (t 6B)	GROSS STANDARD VOLUME	*
1C	16-2-1/2	16-2-1/2	12-10-1/2	0-0	86.7	86.7	12-10-1/2	3065.04	0.00	3065.04	1.00000	3065.04	
2C	16-2-1/2	16-2-1/2	12-9-0	0-0	86.8	86.8	12-9-0	3511.24	0.00	3511.24	1.00000	3511.24	
3C	16-2-3/4	16-2-3/4	10-4-1/4	0-0	86.5	86.5	10-4-1/4	2553.68	0.00	2553.68	1.00000	2553.68	
							TOTALS	9129.96	0.00	9129.96		9129.96	

PROBE WAS CHECKED PRIOR TO USE ☑ YES ☐ NO ☐ NOT USED

GAUGE LOCATION : ☑ STANDPIPE ☐ G.H. on Expansion Trunk

☐ OTHER :

* GAUGE POSITION: C = Center of tank F = Forward of Center A = Aft of Center

SAMPLES DRAWN : 1-3 C

CORRECTED MEASURE : w = Wedge corrected, t = Trim corrected

API @ 60°F SOURCE :

S & W - VOL % : SOURCE :

S & W - VOL : WCF TABLE : (t 8)

NET STANDARD VOLUME	
GROSS STANDARD WEIGHT	
NET STANDARD WEIGHT	
TOTAL CALC. VOL. DEPARTURE	9129.96

BALLAST TANKS PERMANENT ☐ YES IF ☐ NO (SEE F-15 BALLAST TANKS)

SEASUCTION SEAL #'S :

DRAFT: FWD (P) 10-2 AFT (P) 10-2 LIST : º (P) / (S)

(S) 10-2 (S) 10-2

SEA CONDITION: CALM IN PORT

REMARKS :

^ VOLUME CALCULATED IN ACCORDANCE WITH	ASTM D 1250-04
¤ LIQUID LEVEL GAUGES IN ACCORDANCE WITH	API MPMS 17.2.5.2
§ TEMPERATURE DETERMINATION IN ACCORDANCE WITH	API MPMS 17.2.5.3

VESSEL'S STAFF	MIKE ELLIOTT INSPECTOR

Copyright SGS-OG&C 2001 - Rev April 2005

Services rendered according to published General Terms and Conditions

30 8/8/08

F-16

Page 1 of 1

PORT / TERMINAL: Lake Charles, La / Citgo		OFFICE: LAKE CHARLES, LA	TEL: (337) 625-1455
VESSEL: CCL 26	VOY #:	INSPECTOR(S): C. BUSBY	SGS FILE: 112532
DATE: 8/26/2008 CARGO: Spent Caustic		CLIENT: CITGO/CES	REF:

SGS

☑ OBQ ☐ ROB MEASUREMENT

NOTE: DO NOT USE V.C.F. IF TEMPERATURE IS NOT TAKEN

Oil Gas & Chemicals Services Division.

UNITS: ☑ FT-IN ☐ FT ☐ MM ☐ OTHER:

UNITS: ☑ BBLS ☐ U.S. GALS ☐ M³ ☐ OTHER:

TANK #	REFERENCE HEIGHT	OBSERVED REFERENCE HEIGHT	*	OBSERVED INNAGE	FREE WATER INNAGE	NON-LIQUID INNAGE	AVG. TEMP	CORRECTED MEASURE	TOTAL OBSERVED VOLUME	^ V.C.F. (t 6B)	FREE WATER VOLUME	NON-LIQUID VOLUME	LIQUID VOLUME
1C	16-2-1/2	16-2-1/2		0-1-0	0-0-0	0-0-0		0-1-0	18.02			0.00	18.02
2C	16-2-1/2	16-2-1/2		0-0-0	0-0-0	0-0-0		0-0-0	0.00		0.00	0.00	0.00
3C	16-2-3/4	16-2-3/4		0-0-0	0-0-0	0-0-0		0-0-0	0.00		0.00	0.00	0.00
								TOTALS	18.02		0.00	0.00	18.02

^ VOLUME CALCULATED IN ACCORDANCE WITH

On behalf of our client(s) we would like to bring to your attention that in our opinion :

Bbls of LIQUID MATERIAL

Bbls of NON-LIQUID MATERIAL

remains on board your vessel. To the extent we are aware of contractual relationships, this material belongs to our client(s) and should be pumped ashore. In case you are unable to do so please indicate your reasons below. In any event, we have to advise our client(s) of the above and reserve his right to seek compensation for the undelivered amount. Statements with regards to flowability and similiar advisory services express personal opinions without responsibility for SGS.

d = dip, u = Ullage; corrected measure, w = Wedge corrected, t = Trim corrected

GAUGE LOCATION: ☑ STANDPIPE ☐ G.H. on Expansion trunk ☐ OTHER:

* GAUGE POSITION: C = Center of tank F = Forward of Center A = Aft of Center

OBQ SAMPLED ☐ YES ☑ NO IF NO REASON

OBQ TESTED ☐ YES ☑ NO IF NO REASON

ROB SAMPLED ☐ YES ☑ NO IF NO REASON

DRAFT: FWD (P) 2-6 AFT (P) 2-6 LIST: º (P) / (S)

(S) 2-6 (S) 2-6

VESSEL'S STAFF	C. BUSBY INSPECTOR

SEA CONDITION: CALM IN PORT

Copyright SGS-OG&C 1997 - Rev April 2005

Services rendered according to published General Terms and Conditions

20/8/08

F-7 Page 1 of 1

PORT / TERMINAL: Lake Charles, La / Citgo	OFFICE: LAKE CHARLES, LA TEL: (337) 625-1455
VESSEL: CCL 26 VOY #:	INSPECTOR(S): C. BUSBY
DATE: 8/26/2008	SGS FILE: 112532
CARGO: Spent Caustic	CLIENT: CITGO/CES REF:

SGS

INFORMATION FOR CLEANLINESS INSPECTION

Oil Gas & Chemicals Services Division.

☑ AT LOADING ☐ AT TRANSFER ☐ AT DISCHARGE ☐ SHORE ☑ VESSEL

THE INFORMATION ON THIS LIRIS F-7 WILL BE USED TO COMPLETE LIRIS F-9 WAS SUBMITTED TO US BY THE PERSON(S) INDICATED BELOW

WE CONSULTED FOR TANK INSPECTION ON (DATE) 8/26/2008 (TIME) 9:45 WITH:

☐ VESSEL'S STAFF ☐ BARGE OPERATOR ☑ TERMINAL REPRESENTATIVE ☐ CHARTERER

☐ OTHER (SPECIFY):

PLEASE PRINT NAME(S)

TANK MATERIAL:

TANK #:	1-3 C				
MATERIAL	MILD STEEL				
COATING NAME	N/A				
APPARENT CONDITION *	ACCEPTABLE				
TANK #:					
MATERIAL					
COATING NAME					
APPARENT CONDITION *					

COATING WAS CHECKED AGAINST ☐ MANUFACTURERS ☐ OTHER (SPECIFY) CHECKLIST

IF NOT CHECKED, REASO

* SELECT: e.g. % MISSING % DISCOLORED %PEELING ACCEPTABLE etc. (ALL PERCENTAGES ARE APPROXIMATIONS)

OUR INSPECTION FOR F-9 COVERS THE CLEANLINESS OF THE COATINGS, NOT ITS SUITABILITY IN REGARD TO CARGO CONTAMINATION.

PREVIOUS CARGOES:

TANK#	THIRD LAST	SECOND LAST	LAST	COMPATIBLE
1-3 C	SPENT CAUSTIC	SPENT CAUSTIC	SPENT CAUSTIC	☑ YES ☐ NO
				☐ YES ☐ NO
				☐ YES ☐ NO
				☐ YES ☐ NO
				☐ YES ☐ NO
				☐ YES ☐ NO
				☐ YES ☐ NO
				☐ YES ☐ NO

LINES - PUMPS:

NAME	MATERIAL	LAST USED FOR	PRESSED WITH INERT GAS/AIR
			☐ YES ☐ NO PRESSURE
			☐ YES ☐ NO PRESSURE
			☐ YES ☐ NO PRESSURE
			☐ YES ☐ NO PRESSURE
			☐ YES ☐ NO PRESSURE

THE CLEANLINESS CONDITION OF THE CARGO PUMPS AND LINES CANNOT BE ASCERTAINED BY VISUAL EXAMINATION. IT IS RECOMMENDED TO TEST "LINE" SAMPLES PRIOR TO COMMENCING THE TRANSFER AND "FIRST-IN" SAMPLES AT THE START OF THE TRANSFER TO MINIMIZE CARGO CONTAMINATION.

VESSEL REPRESENTATIVE

C. BUSBY
INSPECTOR

Copyright SGS-OG&C 1995 - Rev Oct 2003

Services rendered according to published General Terms and Conditions

F-9 Page 1 of 1

PORT / TERMINAL: Lake Charles, La / Citgo	OFFICE: LAKE CHARLES, LA TEL: (337) 625-1455
VESSEL: CCL 26 VOY #:	INSPECTOR(S): C. BUSBY
DATE: 8/26/2008	SGS FILE: 112532
CARGO: Spent Caustic	CLIENT: CITGO/CES REF:

SGS

TANK CLEANLINESS INSPECTION

Oil Gas & Chemicals Services Division.

☑ AT LOADING ☐ AT TRANSFER ☐ AT DISCHARGE

☑ AS INSPECTION ONLY ☐ AS PRE-INSPECTION ☐ WITH CUSTODY TRANSFER

USE A SEPARATE FORM F-9 PER INSPECTION

THIS IS THE ☑ FIRST ☐ SECOND ☐ THIRD _____ TH INSPECTION

TANK(S): 1-3 C

BASED ON SUBMITTED INFORMATION (SEE LIRIS F-7) AND :

☑ VISUAL CHECK FOR RESIDUES FROM DECKLEVEL (SEE LIRIS F-15 OR F-20)
☐ MEASURING OF RESIDUES FROM DECK LEVEL (SEE LIRIS F-16)
☐ PHYSICAL ENTRY (TANK SAFE ATMOSPHERE STATEMENT BELOW MUST BE COMPLETED PRIOR TO ENTRY)

AND ☐ VISUAL INSPECTION
AND ☐ WALLWASHING (ANALYTICAL REPORT ON FILE)
AND ☐ TESTING OF HEATING COILS

☑ WERE ACCEPTED FOR CLEANLINESS TO CARRY A CARGO OF SPENT CAUSTIC

☐ WERE REJECTED FOR CLEANLINESS TO CARRY A CARGO OF _____

REASON : _____

☐ SHIP'S STAFF AND/OR ☑ SGS SUPERVISOR AND/OR ☐ CLIENT NOTIFIED ON 8/26/2008 BY C. BUSBY

☑ INSPECTION COMPLETED AT 10:15 HRS ON THE 8/26/2008

☐ TANK(S) SUBJECT TO A FINAL INSPECTION AT LOADING BERTH IN CASE OF PRE-INSPECTION

SIGNATURES : _____ FOR VESSEL _____ FOR TERMINAL C. BUSBY INSPECTOR

* IS THIS TANK ACCEPTANCE BASED SOLELY ON SUBMITTED INFORMATION EVALUATION ? ☐ YES ☐ NO

IF YES; ISSUE N.O.A.D. AND INFORM YOUR ☐ SGS SUPERVISOR AND/OR ☐ CLIENT(S) IMMEDIATELY.

TANK SAFE ATMOSPHERE STATEMENT

The undersigned certifies that those tank(s) indicated on line 13 of this page have been cleaned and gas freed as reported on the reverse side of the SGS F-7 and that the tank(s) in question are in all respects safe for entry. The undersigned hereby grants permission for SGS personnel to enter said tanks.

Tank Safe Atmosphere Statement signed _____ hours on _____

SIGNATURES : _____ FOR VESSEL _____ FOR TERMINAL

PRINT NAME (S) : _____ _____

NOTE: DO NOT ENTER THE TANK(S) if this TANK SAFE ATMOSPHERE STATEMENT is not signed and contact your supervisor for further instructions.

Copyright SGS-OG&C 1995 - Rev Oct 2003 Services rendered according to published General Terms and Conditions

SGS

NOT UNLOADED @ BA

10/27
EPA Discharge

Inspection Report (LOADING)

Subject : CCL-26
Product : SPENT CAUSTIC
Client ref.: TBD

Date : 10/12/2008
Location : Lake Charles, La / Citgo
Client : CES ENVIRONMENTAL SERVICES

Our ref.: 116583

Summary of Figures

		Bbls @ 60°F	Gallons @ 60°F
Shore Measurements			
Total Shore figures delivered	GSV	8,325.69	349,678.98
Average API Gravity @ 60°F			
Shoretanks no(s):	TANK/182, TANK/182		
Vessel's Measurements			
Vessel's figures before loading (OBQ) Free Water		0.00	
Vessel's figures before loading (OBQ) Liquid		0.00	
Vessel's figures before loading (OBQ) Non Liquid		0.00	
Vessel's figures before loading (OBQ) Total		0.00	0.00
Vessel's figures TCV on board after loading		8,348.81	350,650.02
Vessel's figures TCV loaded		8,348.81	350,650.02
Vessel's figures Free Water loaded		0.00	0.00
Vessel's figures GSV loaded		8,348.81	350,650.02

Cargo stowage Cargo tanks no(s): CCL-26[1C, 2C, 3C]

Samples

SHORE TANK 2X1 Quarts Running

Barge 1x1 Quart Running Per Cargo Tank

Quality

None Requested

Time Log

10/11/2008	0400	INSPECTOR NOTIFIED
	0500	INSPECTOR ARRIVED
	0530	OPENED & GUAGED ST 182
	0630	VESSEL ARRIVED
	0635	VESSEL ALL FAST
	0640	COMMENCED PRELOAD DECK INSPECTION
	0650	COMPLETED PRELOAD DECK INSPECTION
	1110	6" HOSE CONNECTED
	1130	STARTED LOADING
10/12/2008	0000	INSPECTOR NOTIFIED
	0100	VESSEL ARRIVED
	0140	CLOSED & GUAGED ST 182

SGS North America Inc. | Oil, Gas & Chemicals Services
4701 E. NAPOLEON SULPHUR, LA 70663 t((337) 625-1455) f((337) 625-1721) www.sgs.com

Member of the SGS Group (Société Générale de Surveillance)

SGS

0920	INSPECTOR NOTIFIED
1000	INSPECTOR ARRIVED
1015	OPENED & GUAGED ST 182 AFTER REFILLING ST 182
1035	RESUMED LOADING AFTER GRAVITATING TO ST 182
1500	INSPECTOR NOTIFIED
1510	COMPLETED LOADING TANKERMAN STOPPED LOAD
1540	6" HOSE OFF
1600	INSPECTOR ARRIVED
1605	COMMENCED POST LOAD INSPECTION
1630	COMPLETED POST LOAD INSPECTION
1645	CLOSED ST 182
1650	COMMENCED CALCULATIONS
1730	COMPLETED CALCULATIONS
1800	INSPECTOR DEPARTED

Steve Cross
for SGS Oil, Gas & Chemicals Services
10/13/2008

Shore volume calculated in accordance with: ASTM D 1250-04
Vessel volume calculated in accordance with: ASTM D 1250-04
Procedures as per applicable MPMS Chapter 3.1a, 7, 8.1 or 8.2, 12.1 or 12.2, 17.1, 17.2, 17.4.

Disclaimer

This document is issued by the Company under its General Conditions of Service accessible at http://www.sgs.com/terms_and_conditions.htm. The Client's attention is drawn to the limitation of liability, indemnification and jurisdiction issues defined therein

Any other holder of this document is advised that information contained hereon reflects the Company's findings at the time of its intervention only and within the limits of Client's instructions, if any. The Company's sole responsibility is to its Client and this document does not exonerate parties to a transaction from exercising all their rights and obligations under the transaction documents. Any unauthorized alteration, forgery or falsification of the content or appearance of this document is unlawful and offenders may be prosecuted to the fullest extent of the law.
FIRCC REV January 2007

F-4 Page 1 of 1

PORT / TERMINAL: Lake Charles, La / Citgo	OFFICE: LAKE CHARLES, LA TEL: (337) 625-1455
VESSEL: CCL-26 VOY #:	INSPECTOR(S): M ELLIOTT
DATE: 10/11/2008	SGS FILE: 116583
CARGO: Spent Caustic	CLIENT: REF:

SGS

TIME LOG

Oil Gas & Chemicals Services Division.

☑ AT LOADING ☐ AT TRANSFER ☐ AT DISCHARGE

YEAR 2008 / MONTH JAN FEB MAR APR MAY JUN JUL AUG SEP OCT NOV DEC

Date	Hour	
10/11	04:00	INSPECTOR NOTIFIED
10/11	05:00	INSPECTOR ARRIVED
10/11	05:30	OPENED GUAGED ST 182
10/11	06:30	VESSEL ARRIVED
10/11	06:35	VESSEL ALL FAST
10/11	06:40	COMMENCED PRELOAD DECK INSPECTION
10/11	06:50	COMPLETED PRELOAD DECK INSPECTION
10/11	11:10	6" HOSE CONNECTED
10/11	11:30	STARTED LOADING
10/12	00:00	INSPECTOR NOTIFIED
10/12	01:00	VESSEL ARRIVED
10/12	01:40	CLOSED GUAGED ST 182
10/12	09:20	INSPECTOR NOTIFIED
10/12	10:00	INSPECTOR ARRIVED
10/12	10:15	OPENED GUAGED ST 182 AFTER REFILLING ST 182
10/12	10:35	RESUMED LOADING AFTER GRAVITATING TO ST 182
10/12	15:00	INSPECTOR NOTIFIED
10/12	15:10	COMPLETED LOADING TANKERMAN STOPPED LOAD
10/12	15:40	6" HOSE OFF
10/12	16:00	INSPECTOR ARRIVED
10/12	16:05	COMMENCED POST LOAD INSPECTION
10/12	16:30	COMPLETED POST LOAD INSPECTION
10/12	16:45	CLOSED ST 182
10/12	16:50	COMMENCED CALCULATIONS
10/12	17:30	COMPLETED CALCULATIONS
10/12	18:00	INSPECTOR DEPARTED

DELAYS AND STOPPAGES :

TIMES MARKED * ARE SUBMITTED TO US. TIME LOG PAGE 1 OF 1

CHECKED 10/13/08 DATE

Copyright SGS-OG&C June 1997 - Rev Oct 2003 Services rendered according to published General Terms and Conditions

F-3A

PORT / TERMINAL: Lake Charles, La / Citgo	OFFICE: LAKE CHARLES, LA TEL: (337) 625-1455
VESSEL: CCL-26 VOY #:	INSPECTOR(S): M ELLIOTT
DATE: 10/11/2008	SGS FILE: 116583
CARGO: Spent Caustic	CLIENT: REF:

SGS

VOYAGE ANALYSIS REPORT

Oil Gas & Chemicals Services Division.

☑ LOADING ☐ V-V TRANSFER ☐ DISCHARGE ☐ SUMMARY	Type of Voyage	C/P DATE
	Simple	

Load Port/Terminal/Berth	ARRIVED	SAILED	Discharge Port/Terminal/Berth	ARRIVED	SAILED
LAKE CHARLES CITGO	10/11/2008	10/12/2008			

VOLUME UNITS ☑ BBLS ☐ GALS ☐ M³ ☐ L	SUPPLIER	RECEIVER	VCF SHORE LOAD	VCF SHORE DISCH	VCF VESSEL LOAD	VCF VESSEL DISCH

DESCRIPTION		API/DENSITY	TCV	FW	GSV	S&W	NSV	Reference
I. COMPARISON OF SHORE QUANTITIES IN CUSTODY TRANSFER								
Bill of Lading	1.		8325.69	0.00	8325.69	0.00		(1)
Outturn	2.							(2)
Diff.	3.							(3)=(2) - (1)
Diff. %	4.							(4) = (3) / (1) x 100
Recalc. B/L	5.	(a)		Recalculate if B/L and O/T use different tables.				(5) (a) Vol. Diff.

II. VESSEL/SHORE QUANTITIES AT ( ) LOAD PORT(S)								
Vessel	Sailing	A.	8348.81	0.00	8348.81	LIQUID	NON-LIQUID	(A)
	OBQ (All)	B.	0.00	0.00	0.00	0.00	0.00	(B)
	Loaded	C.	8348.81	0.00	8348.81			(C)=(A) - (B)
	Difference	D.	23.12	0.00				(D)=(C)-[(1) or (5)]
	Difference %	E.	0.28%					(E)=(D)/[(1)or(5)]x100
Load Vessel Ratio		F.	1.0028					(F)=(C)/[(1)or(5)]
Load VEF		G.						(G)
Theoretical Shore		H.						(H)=(C) / (G)
Theoretical Shore Diff.		I.	-8325.69					(I)=(H) - [(1) or (5)]
Theoretical Shore Diff. %		J.	-100.00%					(J)=(I)/[(1) or (5)]x100

II. VESSEL/SHORE QUANTITIES AT ( ) DISCHARGE PORT(S)								
Vessel	Arrival	K.				LIQUID	NON-LIQUID	(K)
	ROB (All)	L.						(L)
	Discharged	M.						(M) = (K) - (L)
	Difference	N.						(N) = (2) - (M)
	Difference %	O.						(O) = (N) / (2) x 100
Discharge Vessel Ratio		P.						(P) = (M) / (2)
Discharge VEF		Q.						(Q)
Theoretical Shore		R.						(R) = (M) / (Q)
Theoretical Shore Diff.		S.						(S) = (2) - (R)
Theoretical Shore Diff. %		T.						(T) = (S) / (2) x 100

III. VESSEL/'S COMPARISON OF LOADING AND DISCHARGE PORT(S) VCF TABLE MUST BE CONSISTENT								
Transit	Difference	U.						(U) = (K) - (A)
	Difference %	V.				LIQUID	NON-LIQUID	(V) = (U) / (A) x 100
OBQ/ROB	Difference	W.						(W) = (L) - (B)

	TCV Difference (3) - OBQ (B) + ROB (L)	[S&W(1)/GSV(1)]X100 / [S&W(2)/GSV(2)]X100
ADJ TCV DIFF :	(Quantity) / 0.00	S&W at Load Port : 0.0000 / S&W at Disch Port :

Comments :

Prepared by : M ELLIOTT	Title : INSPECTOR	Company : SGS	Date Completed : 10/12/2008

Copyright SGS-OG&C June 1997 - Rev Oct 2003 Services rendered according to published General Terms and Conditions

F-1 Page [illegible] of [illegible]

PORT / TERMINAL: Lake Charles, La / Citgo	OFFICE LAKE CHARLES, LA TEL (337) 625-1455
VESSEL CCL-26 VOY #	INSPECTOR(S): M ELLIOTT
DATE 10/11/2008	SGS FILE 116583
CARGO Spent Caustic	CLIENT CES ENVIROMENTAL REF

SGS

SHORE QUANTITY SUMMARY

Oil Gas & Chemicals Services Division.

☑ AT LOADING ☐ AT TRANSFER ☐ AT DISCHARGE ☐ SHORE TANK (STATIC) ☐ METER (DYNAMIC)

CUSTODY TRANSFER SAMPLE

☐ API @ 60°F : ☐ R.D. 60°F/60°F ☐ Density Lbs/Gal @

S&W % VOL:

SOURCE OF ANALYTICAL DATA:

	UNITS	TANK/182	TANK/182	TANK/METER	TANK/METER	TANK/METER
TOTAL CALCULATED VOLUME	BBLS	6205.22	2120.47			
FREE WATER	BBLS	0.00	0.00			
GROSS STANDARD VOLUME	BBLS	6205.22	2120.47			
S & W VOLUME	BBLS					
(NET) STANDARD VOLUME	BBLS					
WCF TABLE (1 8)		8.96200	8.96200	8.96200	8.96200	8.96200
GROSS STANDARD WEIGHT						
S & W WEIGHT						
(NET) STANDARD WEIGHT						

	UNITS	TANK/METER	TANK/METER	SHORELINE	TOTAL DELIVERED
TOTAL CALCULATED VOLUME	BBLS				8325.69
FREE WATER	BBLS				0.00
GROSS STANDARD VOLUME	BBLS				8325.69
S & W VOLUME	BBLS				
(NET) STANDARD VOLUME	BBLS				
		8.96200	8.96200	8.96200	☑ GSV ☐ NSV ☐ SV @
GROSS STANDARD WEIGHT					
S & W WEIGHT					
(NET) STANDARD WEIGHT					

STOWAGE O/B VESSEL:

B/L DATE:

REMARKS QUANTITY CONFIRMED

with _____ of _____

with _____ of _____

Date _____ Time _____

QUANTITY CHANGES ☐ YES ☐ NO IF YES STATE REASON

Copyright SGS-OG&C June 1997 - Rev Oct 2003 Services rendered according to published General Terms and Conditions

F-2

PORT / TERMINAL: Lake Charles, La / Citgo	OFFICE: LAKE CHARLES, LA TEL: (337) 625-1455
VESSEL: CCL-26 VOY #:	INSPECTOR(S): M ELLIOTT
DATE: 10/11/2008	SGS FILE: 116583
CARGO: Spent Caustic	CLIENT: REF:

SGS

VESSEL QUANTITY SUMMARY

Oil Gas & Chemicals Services Division.

☑ AT LOADING ☐ AT TRANSFER ☐ AT DISCHARGE ☐ CRUDE OIL ☑ PRODUCTS

☐ API @ 60ºF : ☐ R.D. 60ºF/60ºF ☐ Density Lbs/Gal @

S&W % VOL:

SOURCE OF ANALYTICAL DATA:

	VOLUME		WCF (t)	WEIGHT		
	BBLS	U.S. GALS		POUNDS	LONG TONS	METRIC TONS (AIR)
VESSEL'S QUANTITIES	V.E.F. CORRECTED : ☐ YES ☐ NO VEF:					
TOTAL CALCULATED VOL	8348.81	350650.02				
FREE WATER	0.00	0.00				
GROSS STANDARD VOLUME	8348.81	350650.02				
S & W VOLUME						
(NET) STANDARD VOLUME						

☑ OBQ ☐ ROB

LIQUID MATERIAL	0.00	0.00				
NON-LIQUID MATERIAL	0.00	0.00				
FREE WATER	0.00	0.00				
TOTAL	0.00	0.00				

☑ LOADED QUANTITIES ☐ DISCHARGED QUANTITIES

TOTAL CALCULATED VOL	8348.81	350650.02				
FREE WATER	0.00	0.00				
GROSS STANDARD VOLUME	8348.81	350650.02				
S & W VOLUME						
(NET) STANDARD VOLUME						

ARE SLOPS INCLUDED IN CALCULATIONS ☐ YES ☐ NO ☑ NO SLOPS ON BOARD

STOWAGE O/B VESSEL:

REMARKS:

Copyright SGS-OG&C 1995 - Rev Oct 2003 Services rendered according to published General Terms and Conditions

F-10 Page 1 of 2

PORT / TERMINAL: Lake Charles, La / Citgo		OFFICE LAKE CHARLES, LA	TEL (337) 625-1455
VESSEL CCL-26	VOY #	INSPECTOR(S): M ELLIOTT	SGS FILE 116583
CARGO Spent Caustic		CLIENT	REF

SGS

SHORE TANK MEASUREMENTS (STATIC)

☑ AT LOADING ☐ AT TRANSFER ☐ AT DISCHARGE Oil Gas & Chemicals Services Division.

SHORETANK # 182 REF HEIGHT: GAUGE UNITS ☑ FT - IN ☐ FT ☐ MM ☐ OTHER:

OPEN DATE: 10/11/2008 TIME: 5:30 CLOSE DATE: 10/12/2008 TIME: 13:40

OBS. REF. HEIGHT	§ INNAGE	¤ WATER INNAGE	OBS. REF. HEIGHT	§ INNAGE	¤ WATER INNAGE
29-11-3/4	27-6-0	0-0	8-3-1/8		0-0

	OPEN	CLOSE
INSPECTOR:	M ELLIOTT	M ELLIOTT
WITNESS:		
API @ 60ºF		
SOURCE		
AMBIENT AIR TEMP	68.0	83.0
TEMP OF TANK SHELL	81	84
AVG TEMP (0.1ºF)	82.5	83.7
AVG INNAGE	27-6-0	8-3-1/8
AVG WATER INNAGE	0-0	0-0
VOLUME UNITS ☑ BBLS ☐ M³ ☐ OTHER:		
TABLE VOLUME **	8826.89	2621.67
FREE WATER	0.00	0.00
OBSERVED VOLUME	8826.89	2621.67
TANK SHELL CORR.	1.00026	1.00030
OBSERVED VOLUME	8829.18	2622.46
ROOF CORRECTION	1.00	1.00
GROSS OBSERVED VOL.	8830.18	2623.46
^VCF TABLE: (t 6B)		
GROSS STANDARD VOL.		
DIFFERENCE	6205.22	
CUSTODY TRANSFER SAMPLE:		
API @ 60ºF/ DE		
S & W % VOL.		
S & W VOLUME		
NET STANDARD VOLUME		
WCF TABLE: (t 8)		
GROSS STANDARD WT.		
NET STANDARD WEIGHT		
WEIGHT UNITS ☐ LT ☐ MT ☑ LBS ☐ OTHER:		
** IS TABLE VOLUME IN ☑ BBLS ☐ M³ ☐ OTHER:		

§ MEASUREMENTS TAKEN IN ACCORDANCE WITH : INNAGE: API MPMS 3.1A.9.2

¤ FREE WATER DETERMINED IN ACCORDANCE WITH : API MPMS 3.1A.10.1

TEMPERATURES TAKEN IN ACCORDANCE WITH : API MPMS 7.6.4

^ VOLUME CALCULATED IN ACCORDANCE WITH : ASTM D 1250-04

PROD TEMP	82.5 x 0.875 =	72.1875	PROD TEMP	83.7 x 0.875 =	73.2375
(+) AIR TEMP	68.0 x 0.125 =	8.5000	(+) AIR TEMP	83.0 x 0.125 =	10.3750
TANK SHELLTEMPERATURE:	=	81	TANK SHELL TEMPERATURE	=	84

ROOF CORRECTION INFO - STANDARD API:

CRITICAL ZONE RANGE FROM TO ROOF LEG ☐ HIGH ☐ LOW

	OPEN	CLOSE
AVG INN/ULL IN CRITICAL ZONE	☐ YES ☑ NO	☐ YES ☐ NO
SIDEGAUGE/ATG	27-5-3/4 27-5-12	8-2-3/4 8-2-11
TEMPERATURES ºF	# ☑ PROBE ☐ MERCURY	# ☑ PROBE ☐ MERCURY
* ACTION TAKEN:	☑ U 82.5 ☑ M 82.5 ☑ L 82.5	☑ U 83.7 ☑ M 83.7 ☑ L 83.7
	☐ M	☐ M
	☐ OTHER*	☐ OTHER*
SIDETEMP/REMOTE		
PROBE WAS CHECKED PRIOR TO USE	☐ YES ☐ NO ☐ NOT USED	
SAMPLING	☐ U ☐ M ☐ L	☐ U ☐ M ☐ L
* ACTION TAKEN:	☐ T ☐ B ☐ R	☐ T ☐ B ☐ R
	☐ OTHER*	☐ OTHER*
AT ULLAGES:		
CAL DATE:	Ref TSh Temp: 60	OP TEMP:

Copyright SGS-OG&C 2001 - Rev April 2005

Services rendered according to published General Terms and Conditions

F-10 Page 2 of 2

PORT / TERMINAL: Lake Charles, La	/ Citgo	OFFICE LAKE CHARLES, LA	TEL (337) 625-1455
VESSEL CCL-26	VOY #	INSPECTOR(S): M ELLIOTT	SGS FILE 116583
CARGO Spent Caustic		CLIENT	REF

SGS

SHORE TANK MEASUREMENTS (STATIC)

☑ AT LOADING ☐ AT TRANSFER ☐ AT DISCHARGE Oil Gas & Chemicals Services Division.

SHORETANK # 182 REF HEIGHT : GAUGE UNITS ☑ FT - IN ☐ FT ☐ MM ☐ OTHER :

OPEN DATE : 10/12/2008 TIME : 10:15 CLOSE DATE : 10/12/2008 TIME : 16:45

OBS. REF. HEIGHT	§ INNAGE	¤ WATER INNAGE	OBS. REF. HEIGHT	§ INNAGE	¤ WATER INNAGE
21-0-1/2	18-7-0	0-0	14-5-0	12-0-1/8	0-0

§ MEASUREMENTS TAKEN IN ACCORDANCE WITH : INNAGE: API MPMS 3.1A.9.2

¤ FREE WATER DETERMINED IN ACCORDANCE WITH : API MPMS 3.1A.10.1

TEMPERATURES TAKEN IN ACCORDANCE WITH : API MPMS 7.6.4

^ VOLUME CALCULATED IN ACCORDANCE WITH : ASTM D 1250-04

PROD TEMP	85.5	x 0.875 =	74.8125	PROD TEMP	85.3	x 0.875 =	74.6375
(+) AIR TEMP	80.0	x 0.125 =	10.0000	(+) AIR TEMP	85.0	x 0.125 =	10.6250
TANK SHELLTEMPERATURE:		=	85	TANK SHELL TEMPERATURE		=	85

ROOF CORRECTION INFO - STANDARD API:

CRITICAL ZONE RANGE FROM TO ROOF LEG ☐ HIGH ☐ LOW

	OPEN	CLOSE
AVG INN/ULL IN CRITICAL ZONE	☐ YES ☐ NO	☐ YES ☐ NO
SIDEGAUGE/ATG	18-6-1/2 18-6-7	11-11-1/4 11-11-3
TEMPERATURES °F	# ☑ PROBE ☐ MERCURY	# ☑ PROBE ☐ MERCURY
* ACTION TAKEN :	☑ U 85.5 ☑ M 85.5 ☑ L 85.5	☑ U 85.3 ☑ M 85.3 ☑ L 85.3
	☐ M	☐ M
	☐ OTHER*	☐ OTHER*
SIDETEMP/REMOTE		
PROBE WAS CHECKED PRIOR TO USE	☐ YES ☐ NO ☐ NOT USED	
SAMPLING	☐ U ☐ M ☐ L	☐ U ☐ M ☐ L
* ACTION TAKEN :	☐ T ☐ B ☐ R	☐ T ☐ B ☐ R
	☐ OTHER*	☐ OTHER*
AT ULLAGES :		
CAL DATE :	Ref TSh Temp : 60	OP TEMP :

	OPEN	CLOSE
INSPECTOR:	M ELLIOTT	M ELLIOTT
WITNESS:		
API @ 60°F		
SOURCE		
AMBIENT AIR TEMP	80.0	85.0
TEMP OF TANK SHELL	85	85
AVG TEMP (0.1°F)	85.5	85.3
AVG INNAGE	18-7-0	12-0-1/8
AVG WATER INNAGE	0-0	0-0
VOLUME UNITS ☑ BBLS ☐ M³ ☐ OTHER :		
TABLE VOLUME **	5950.82	3831.00
FREE WATER	0.00	0.00
OBSERVED VOLUME	5950.82	3831.00
TANK SHELL CORR.	1.00031	1.00031
OBSERVED VOLUME	5952.66	3832.19
ROOF CORRECTION	1.00	1.00
GROSS OBSERVED VOL.	5953.66	3833.19
^VCF TABLE : (t 6B)		
GROSS STANDARD VOL.		
DIFFERENCE	2120.47	
CUSTODY TRANSFER SAMPLE:		
API @ 60°F/ DE		
S & W % VOL.		
S & W VOLUME		
NET STANDARD VOLUME		
WCF TABLE : (t 8)		
GROSS STANDARD WT.		
NET STANDARD WEIGHT		
WEIGHT UNITS ☐ LT ☐ MT ☐ LBS ☐ OTHER :		
** IS TABLE VOLUME IN ☑ BBLS ☐ M³ ☐ OTHER :		

Copyright SGS-OG&C 2001 - Rev April 2005

Services rendered according to published General Terms and Conditions

F-15

Page [illegible] of [illegible]

PORT / TERMINAL: Lake Charles, La / Citgo		OFFICE: LAKE CHARLES, LA	TEL: (337) 625-1455
VESSEL: CCL-26	VOY #:	INSPECTOR(S): M ELLIOTT	SGS FILE: 116583
DATE: 10/11/2008 CARGO: Spent Caustic		CLIENT:	REF:

SGS

VESSEL MEASUREMENT SYSTEM

☑ OPEN ☐ CLOSE / RESTRICTED

☐ ARRIVAL ☐ DEPARTURE

Oil Gas & Chemicals Services Division.

☑ AT LOADING ☐ AT TRANSHIPMENT ☐ AT DISCHARGE ☑ CARGO TANKS ☐ BALLAST TANKS ☐ NON/OTHER CARGO

UNITS : ☑ FT-IN ☐ FT ☐ MM ☐ OTHER : UNITS : ☑ BBLS ☐ U.S. GALS ☐ M³ ☐ OTHER :

TANK #	REFERENCE HEIGHT	OBSERVED REFERENCE HEIGHT	¤ INNAGE	WATER INN	TEMPERATURES °F § PROBE	AVG. TEMP	CORRECTED MEASURE	TOTAL OBSERVED VOLUME	FREE WATER	GROSS OBSERVED VOLUME	^ V.C.F. (t 6B)	GROSS STANDARD VOLUME	*
1C	16-2-1/2	16-2-1/2	11-8-1/2	0-0	83.0	83.0	11-8-1/2	2816.50	0.00	2816.50			
2C	16-2-1/2	16-2-1/2	11-4-3/4	0-0	83.0	83.0	11-4-3/4	3138.05	0.00	3138.05			
3C	16-2-3/4	16-2-3/4	9-8-1/2	0-0	83.2	83.2	9-8-1/2	2394.26	0.00	2394.26			
							TOTALS	8348.81	0.00	8348.81			

PROBE WAS CHECKED PRIOR TO USE ☑ YES ☐ NO ☐ NOT USED

GAUGE LOCATION : ☑ STANDPIPE ☐ G.H. on Expansion Trunk

☐ OTHER :

* GAUGE POSITION: C = Center of tank F = Forward of Center A = Aft of Center

SAMPLES DRAWN : 1-3C

CORRECTED MEASURE : w = Wedge corrected, t = Trim corrected

API @ 60F / DENSITY @ 15C	SOURCE :
S & W - VOL % :	SOURCE :
S & W - VOL :	WCF TABLE : (t 8)
NET STANDARD VOLUME	
GROSS STANDARD WEIGHT	
NET STANDARD WEIGHT	
TOTAL CALC. VOL. DEPARTURE	
REMARKS :	
^ VOLUME CALCULATED IN ACCORDANCE WITH	ASTM D 1250-04
¤ LIQUID LEVEL GAUGES IN ACCORDANCE WITH	API MPMS 17.2.5.2
§TEMPERATURE DETERMINATION IN ACCORDANCE WITH	API MPMS 17.2.5.3

BALLAST TANKS PERMANENT ☐ YES IF ☐ NO (SEE F-15 BALLAST TANKS)

SEASUCTION SEAL #'S :

DRAFT: FWD (P) 9-3 AFT (P) 9-6 LIST : ° (P) / (S)

(S) 9-3 (S) 9-6

SEA CONDITION: CALM IN PORT

	M ELLIOTT
VESSEL'S STAFF	INSPECTOR

Copyright SGS-OG&C 2001 - Rev April 2005

Services rendered according to published General Terms and Conditions

10/19/08

F-16

Page [illegible] of [illegible]

PORT / TERMINAL: Lake Charles, La / Citgo		OFFICE: LAKE CHARLES, LA	TEL: (337) 625-1455
VESSEL: CCL-26	VOY #:	INSPECTOR(S): M ELLIOTT	SGS FILE: 116583
DATE: 10/11/2008 CARGO: Spent Caustic		CLIENT:	REF:

SGS

☑ OBQ ☐ ROB MEASUREMENT

NOTE: DO NOT USE V.C.F. IF TEMPERATURE IS NOT TAKEN

Oil Gas & Chemicals Services Division.

UNITS : ☑ FT-IN ☐ FT ☐ MM ☐ OTHER : UNITS : ☑ BBLS ☐ U.S. GALS ☐ M³ ☐ OTHER :

TANK #	REFERENCE HEIGHT	OBSERVED REFERENCE HEIGHT	*	OBSERVED INNAGE	FREE WATER INNAGE	NON-LIQUID INNAGE	AVG. TEMP	CORRECTED MEASURE	TOTAL OBSERVED VOLUME	^ V.C.F. (t)	FREE WATER VOLUME	NON-LIQUID VOLUME	LIQUID VOLUME
1C	VISUAL	VISUAL		0-0	0-0	0-0	60	0-0	0.00		0.00	0.00	0.00
2C	VISUAL	VISUAL		0-0	0-0	0-0	60	0-0	0.00		0.00	0.00	0.00
3C	VISUAL	VISUAL		0-0	0-0	0-0	60	0-0	0.00		0.00	0.00	0.00
								TOTALS	0.00		0.00	0.00	0.00

^ VOLUME CALCULATED IN ACCORDANCE WITH

On behalf of our client(s) we would like to bring to your attention that in our opinion :

Bbls of LIQUID MATERIAL

Bbls of NON-LIQUID MATERIAL

remains on board your vessel. To the extent we are aware of contractual relationships, this material belongs to our client(s) and should be pumped ashore. In case you are unable to do so please indicate your reasons below. In any event, we have to advise our client(s) of the above and reserve his right to seek compensation for the undelivered amount. Statements with regards to flowability and similiar advisory services express personal opinions without responsibility for SGS.

d = dip, u = Ullage; corrected measure, w = Wedge corrected, t = Trim corrected

GAUGE LOCATION : ☐ STANDPIPE ☐ G.H. on Expansion trunk ☐ OTHER :

* GAUGE POSITION: C = Center of tank F = Forward of Center A = Aft of Center

OBQ SAMPLED ☐ YES ☐ NO IF NO REASON

OBQ TESTED ☐ YES ☐ NO IF NO REASON

ROB SAMPLED ☐ YES ☐ NO IF NO REASON

DRAFT: FWD (P) 2-0 AFT (P) 2-0 LIST : º (P) / (S)

(S) 2-0 (S) 2-0

SEA CONDITION: CALM IN PORT

	M ELLIOTT
VESSEL'S STAFF	INSPECTOR

Copyright SGS-OG&C 1997 - Rev April 2005

Services rendered according to published General Terms and Conditions

10/13/08

SGS

NOT UNLOADED @ PA

Inspection Report (Loading)

Subject : CCL 26
Product : Spent Caustic
Client ref.: TBD

Date : 12/9/2008
Location : Lake Charles / Citgo
Client : CES Environmental

Our ref.: 121871

Summary of Figures

		Bbls @ 60°F	Gallons @ 60°F
Shore Measurements			
Total Shore figures delivered	GSV	7,935.08	333,273.36
Average API Gravity @ 60°F			
Shoretanks no(s):	TANK 185		
Vessel's Measurements			
Vessel's figures before loading (OBQ) Free Water		0.00	
Vessel's figures before loading (OBQ) Liquid		0.00	
Vessel's figures before loading (OBQ) Non Liquid		0.00	
Vessel's figures before loading (OBQ) Total		0.00	0.00
Vessel's figures TCV on board after loading		7,968.64	334,682.88
Vessel's figures TCV loaded		7,968.64	334,682.88
Vessel's figures Free Water loaded		0.00	0.00
Vessel's figures GSV loaded		7,968.64	334,682.88

Cargo stowage Cargo tanks no(s): CCL 26[1C, 2C, 3C]

Samples – Shore Tank 1x1 Quart Running

Barges – 2x1 Quarts Running Per Cargo Tank

Time Log

12/8/2008	1655	INSPECTOR NOTIFIED
	1800	INSPECTOR ARRIVED
	1845	CARGO HOSE CONNECTED
	1910	S/T 185 GAUGED OPEN AND SAMPLED
	1945	COMMENCED PRE-DECK INSPECTION
	1950	COMPLETED PRE-DECK INSPECTION
	2015	COMMENCED LOADING
	2045	DOWN FOR LINE-DISPLACEMENT
	2055	RESUMED LOADING
12/9/2008	1850	COMPLETED LOADING
	1910	CARGO HOSE DISCONNECTED
	1930	INSPECTOR NOTIFIED
	2020	INSPECTOR ARRIVED
	2050	S/T 185 GAUGED CLOSED
	2110	COMMENCED FINAL INSPECTION
	2140	COMPLETED FINAL INSPECTION

SGS

Steve Cross
for SGS Oil, Gas & Chemicals Services
12/10/2008

Shore volume calculated in accordance with: ASTM D 1250-04
Vessel volume calculated in accordance with:
Procedures as per applicable MPMS Chapter 3.1a, 7, 8.1 or 8.2, 12.1 or 12.2, 17.1, 17.2, 17.4.

Disclaimer

This document is issued by the Company under its General Conditions of Service accessible at http://www.sgs.com/terms_and_conditions.htm. The Client's attention is drawn to the limitation of liability, indemnification and jurisdiction issues defined therein.

Any other holder of this document is advised that information contained hereon reflects the Company's findings at the time of its intervention only and within the limits of Client's instructions, if any. The Company's sole responsibility is to its Client and this document does not exonerate parties to a transaction from exercising all their rights and obligations under the transaction documents. Any unauthorized alteration, forgery or falsification of the content or appearance of this document is unlawful and offenders may be prosecuted to the fullest extent of the law.
FIRCC REV. January 2007

F-4

Page 1 of 1

PORT / TERMINAL: Lake Charles, La / Citgo	OFFICE: LAKE CHARLES, LA TEL: (337) 625-1455
VESSEL: CCL 26 VOY #:	INSPECTOR(S): TM
DATE: 12/9/2008	SGS FILE: 121871
CARGO: Spent Caustic	CLIENT: REF:

SGS

TIME LOG

Oil Gas & Chemicals Services Division.

☑ AT LOADING ☐ AT TRANSFER ☐ AT DISCHARGE

YEAR 2008 / MONTH JAN FEB MAR APR MAY JUN JUL AUG SEP OCT NOV DEC

Date	Hour	
12/8	16:55	INSPECTOR NOTIFIED
12/8	18:00	INSPECTOR ARRIVED
12/8	18:45	CARGO HOSE CONNECTED
12/8	19:10	S/T 185 GAUGED OPEN AND SAMPLED
12/8	19:45	COMMENCED PRE-DECK INSPECTION
12/8	19:50	COMPLETED PRE-DECK INSPECTION
12/8	20:15	COMMENCED LOADING
12/8	20:45	DOWN FOR LINE-DISPLACEMENT
12/8	20:55	RESUMED LOADING
12/9	18:50	COMPLETED LOADING
12/9	19:10	CARGO HOSE DISCONNECTED
12/9	19:30	INSPECTOR NOTIFIED
12/9	20:20	INSPECTOR ARRIVED
12/9	20:50	S/T 185 GAUGED CLOSED
12/9	21:10	COMMENCED FINAL INSPECTION
12/9	21:40	COMPLETED FINAL INSPECTION

DELAYS AND STOPPAGES :

TIMES MARKED * ARE SUBMITTED TO US. TIME LOG PAGE 1 OF 1

Copyright SGS-OG&C June 1997 - Rev Oct 2003 Services rendered according to published General Terms and Conditions

F-3A

Page [illegible] of [illegible]

PORT / TERMINAL: Lake Charles, La / Citgo	OFFICE: LAKE CHARLES, LA TEL: (337) 625-1455
VESSEL: CCL 26 VOY #:	INSPECTOR(S): TM
DATE: 12/9/2008	SGS FILE: 121871
CARGO: Spent Caustic	CLIENT: REF:

SGS

VOYAGE ANALYSIS REPORT

Oil Gas & Chemicals Services Division.

☑ LOADING ☐ V-V TRANSFER ☐ DISCHARGE ☐ SUMMARY

Type of Voyage	C/P DATE

Load Port/Terminal/Berth	ARRIVED	SAILED	Discharge Port/Terminal/Berth	ARRIVED	SAILED
L.C./ CITGO/ C-SLIP	12/8/2008	12/9/2008			

VOLUME UNITS ☑ BBLS ☐ GALS ☐ M³ ☐ L	SUPPLIER	RECEIVER	VCF SHORE LOAD	VCF SHORE DISCH	VCF VESSEL LOAD	VCF VESSEL DISCH

DESCRIPTION		API/DENSITY	TCV	FW	GSV	S&W	NSV	Reference
I. COMPARISON OF SHORE QUANTITIES IN CUSTODY TRANSFER								
Bill of Lading	1.		7935.08	0.00	7935.08			(1)
Outturn	2.							(2)
Diff.	3.							(3)=(2) - (1)
Diff. %	4.							(4) = (3) / (1) x 100
Recalc. B/L	5.	(a)		Recalculate if B/L and O/T use different tables.				(5) (a) Vol. Diff.
II. VESSEL/SHORE QUANTITIES AT ( ) LOAD PORT(S)								
Vessel	Sailing	A.	7968.64	0.00	7968.64	LIQUID	NON-LIQUID	(A)
	OBQ (All)	B.	0.00	0.00	0.00	0.00	0.00	(B)
	Loaded	C.	7968.64	0.00	7968.64			(C)=(A) - (B)
	Difference	D.	33.56	0.00	33.56			(D)=(C)-[(1) or (5)]
	Difference %	E.	0.42%		0.42%			(E)=(D)/[(1)or(5)]x100
Load Vessel Ratio		F.	1.0042					(F)=(C)/[(1)or(5)]
Load VEF		G.	0.00000					(G)
Theoretical Shore		H.	0.00					(H)=(C) / (G)
Theoretical Shore Diff.		I.	-7935.08					(I)=(H) - [(1) or (5)]
Theoretical Shore Diff. %		J.	-100.00%					(J)=(I)/[(1) or (5)]x100
II. VESSEL/SHORE QUANTITIES AT ( ) DISCHARGE PORT(S)								
Vessel	Arrival	K.				LIQUID	NON-LIQUID	(K)
	ROB (All)	L.						(L)
	Discharged	M.						(M) = (K) - (L)
	Difference	N.						(N) = (2) - (M)
	Difference %	O.						(O) = (N) / (2) x 100
Discharge Vessel Ratio		P.						(P) = (M) / (2)
Discharge VEF		Q.						(Q)
Theoretical Shore		R.						(R) = (M) / (Q)
Theoretical Shore Diff.		S.						(S) = (2) - (R)
Theoretical Shore Diff. %		T.						(T) = (S) / (2) x 100
III. VESSEL/'S COMPARISON OF LOADING AND DISCHARGE PORT(S) VCF TABLE MUST BE CONSISTENT								
Transit	Difference	U.						(U) = (K) - (A)
	Difference %	V.				LIQUID	NON-LIQUID	(V) = (U) / (A) x 100
OBQ/ROB	Difference	W.						(W) = (L) - (B)

ADJ TCV DIFF : TCV Difference (3) - OBQ (B) + ROB (L) (Quantity) / 0.00	[S&W(1)/GSV(1)]X100 S&W at Load Port :	[S&W(2)/GSV(2)]X100 S&W at Disch Port :

Comments :

Prepared by : TIM MC DONALD	Title : INSPECTOR	Company : SGS	Date Completed : 12/9/2008

Copyright SGS-OG&C June 1997 - Rev Oct 2003 Services rendered according to published General Terms and Conditions

F-2 Page

PORT / TERMINAL: Lake Charles, La / Citgo	OFFICE: LAKE CHARLES, LA TEL: (337) 625-1455
VESSEL: CCL 26 VOY #:	INSPECTOR(S): TM
DATE: 12/9/2008	SGS FILE: 121871
CARGO: Spent Caustic	CLIENT: REF:

SGS

VESSEL QUANTITY SUMMARY

Oil Gas & Chemicals Services Division.

☑ AT LOADING ☐ AT TRANSFER ☐ AT DISCHARGE ☐ CRUDE OIL ☑ PRODUCTS

☐ API @ 60°F : ☐ R.D. 60°F/60°F ☐ Density Lbs/Gal @

S&W % VOL:

SOURCE OF ANALYTICAL DATA:

	VOLUME		WCF (t)	WEIGHT		
	BBLS	U.S. GALS		POUNDS	LONG TONS	METRIC TONS (AIR)
VESSEL'S QUANTITIES	V.E.F. CORRECTED : ☐ YES ☑ NO VEF:					
TOTAL CALCULATED VOL	7968.64	334682.88				
FREE WATER	0.00	0.00				
GROSS STANDARD VOLUME	7968.64	334682.88				
S & W VOLUME						
(NET) STANDARD VOLUME						

☑ OBQ ☐ ROB

LIQUID MATERIAL	0.00	0.00				
NON-LIQUID MATERIAL	0.00	0.00				
FREE WATER	0.00	0.00				
TOTAL	0.00	0.00				

☑ LOADED QUANTITIES ☐ DISCHARGED QUANTITIES

TOTAL CALCULATED VOL	7968.64	334682.88				
FREE WATER	0.00	0.00				
GROSS STANDARD VOLUME	7968.64	334682.88				
S & W VOLUME						
(NET) STANDARD VOLUME						

ARE SLOPS INCLUDED IN CALCULATIONS ☐ YES ☑ NO ☐ NO SLOPS ON BOARD

STOWAGE O/B VESSEL: 1-3C

REMARKS:

Copyright SGS-OG&C 1995 - Rev Oct 2003 Services rendered according to published General Terms and Conditions

F-10 Page [illegible] of [illegible]

PORT / TERMINAL: Lake Charles, La / Citgo		OFFICE LAKE CHARLES, LA	TEL (337) 625-1455
VESSEL CCL 26	VOY #	INSPECTOR(S): TM	SGS FILE 121871
CARGO Spent Caustic		CLIENT	REF

SGS

SHORE TANK MEASUREMENTS (STATIC)

☑ AT LOADING ☐ AT TRANSFER ☐ AT DISCHARGE Oil Gas & Chemicals Services Division.

SHORETANK # 185 REF HEIGHT : 42-10-0/0 GAUGE UNITS ☑ FT - IN ☐ FT ☐ MM ☐ OTHER :

OPEN DATE : 12/8/2008 TIME : 19:10 CLOSE DATE : 12/9/2008 TIME : 20:50

OBS. REF. HEIGHT	§ ULLAGE	¤ WATER INNAGE	OBS. REF. HEIGHT	§ ULLAGE	¤ WATER INNAGE
42-10-0/0	10-0-1/8	NIL	42-10-0/0	34-8-0/0	NIL
TAPE	10-2-0/0	OIL 3-3-0/0	TAPE	34-9-0/0	OIL 3-3-0/0
BOB	0-1-7/8		BOB	0-1-0/0	

§ MEASUREMENTS TAKEN IN ACCORDANCE WITH : ULLAGE: API MPMS 3.1A.9.3

¤ FREE WATER DETERMINED IN ACCORDANCE WITH : API MPMS 3.1A.10.1

TEMPERATURES TAKEN IN ACCORDANCE WITH : API MPMS 7.6.4

^ VOLUME CALCULATED IN ACCORDANCE WITH : ASTM D 1250-04

PROD TEMP	58.3	x 0.875 =	51.0125	PROD TEMP	58.0	x 0.875 =	50.7500
(+) AIR TEMP	67.0	x 0.125 =	8.3750	(+) AIR TEMP	67.0	x 0.125 =	8.3750

TANK SHELLTEMPERATURE: = 59 TANK SHELL TEMPERATURE = 59

ROOF CORRECTION INFO - STANDARD API:

CRITICAL ZONE RANGE FROM TO ROOF LEG ☐ HIGH ☐ LOW

	OPEN	CLOSE
AVG INN IN CRITICAL ZONE	☐ YES ☑ NO	☐ YES ☑ NO
SIDEGAUGE/ATG	32-10-0/0 / 32-9-15/16	8-2-0/0
TEMPERATURES °F	# ☑ PROBE ☐ MERCURY	# ☑ PROBE ☐ MERCURY
* ACTION TAKEN :	☑ U 58.1 ☑ M 58.3 ☑ L 58.5	☑ U 58.0 ☐ M ☐ L
	☐ M	☐ M
	☐ OTHER*	☐ OTHER*
SIDETEMP/REMOTE	59.0	58.6
PROBE WAS CHECKED PRIOR TO USE	☑ YES ☐ NO ☐ NOT USED	
SAMPLING	☐ U ☐ M ☐ L	☐ U ☐ M ☐ L
* ACTION TAKEN :	☐ T ☐ B ☑ R 2QT	☐ T ☐ B ☐ R
	☐ OTHER*	☐ OTHER*
AT ULLAGES :		
CAL DATE :	Ref TSh Temp : 60	OP TEMP :

	OPEN	CLOSE
INSPECTOR:	T. MC DONALD	T. MC DONALD
WITNESS:		
API @ 60°F/ DENS. @ 15°		
SOURCE	TERMINAL	TERMINAL
AMBIENT AIR TEMP	67.0	67.0
TEMP OF TANK SHELL	59	59
AVG TEMP (0.1°F)	58.3	58.0
AVG INNAGE	32-9-7/8	8-2-0/0
AVG WATER INNAGE	NIL	NIL
VOLUME UNITS ☑ BBLS ☐ M³ ☐ OTHER :		
TABLE VOLUME **	10545.29	2610.21
FREE WATER	0.00	0.00
OBSERVED VOLUME	10545.29	2610.21
TANK SHELL CORR.	0.99999	0.99999
OBSERVED VOLUME	10545.18	2610.18
ROOF CORRECTION	0.00	0.00
GROSS OBSERVED VOL.	10545.18	2610.18
^VCF TABLE : (t)		
GROSS STANDARD VOL.		
DIFFERENCE	7935.08	
CUSTODY TRANSFER SAMPLE:		
API @ 60°F/ DE		
S & W % VOL.		
S & W VOLUME		
NET STANDARD VOLUME		
WCF TABLE : (t)		
GROSS STANDARD WT.		
NET STANDARD WEIGHT		
WEIGHT UNITS ☐ LT ☐ MT ☐ LBS ☐ OTHER :		
** IS TABLE VOLUME IN ☐ BBLS ☐ M³ ☐ OTHER :		

Copyright SGS-OG&C 2001 - Rev April 2005

Services rendered according to published General Terms and Conditions

12/10/08

F-15

Page [illegible] of [illegible]

PORT / TERMINAL: Lake Charles, La / Citgo		OFFICE: LAKE CHARLES, LA	TEL: (337) 625-1455
VESSEL: CCL 26	VOY #:	INSPECTOR(S): TM	SGS FILE: 121871
DATE: 12/9/2008 CARGO: Spent Caustic		CLIENT:	REF:

SGS

VESSEL MEASUREMENT SYSTEM

☑ OPEN ☐ CLOSE / RESTRICTED

☐ ARRIVAL ☑ DEPARTURE

Oil Gas & Chemicals Services Division.

☑ AT LOADING ☐ AT TRANSHIPMENT ☐ AT DISCHARGE ☑ CARGO TANKS ☐ BALLAST TANKS ☐ NON/OTHER CARGO

UNITS : ☑ FT-IN ☐ FT ☐ MM ☐ OTHER : UNITS : ☑ BBLS ☐ U.S. GALS ☐ M³ ☐ OTHER :

TANK #	REFERENCE HEIGHT	OBSERVED REFERENCE HEIGHT	¤ ULLAGE	WATER INN	TEMPERATURES °F § PROBE	AVG. TEMP	CORRECTED MEASURE	TOTAL OBSERVED VOLUME	FREE WATER	GROSS OBSERVED VOLUME	^ V.C.F. (t)	GROSS STANDARD VOLUME	*
1C	16-2-1/2	16-2-1/2	4-4-1/4	NIL	62	62.0	11-10-1/4	2847.57	0.00	2847.57			
2C	16-2-1/2	16-2-1/2	6-5-0/0	NIL	62	62.0	9-9-1/2	2695.96	0.00	2695.96			
3C	16-2-3/4	16-2-3/4	6-4-3/4	NIL	62	62.0	9-10-0/0	2425.11	0.00	2425.11			
							TOTALS	7968.64	0.00	7968.64			

PROBE WAS CHECKED PRIOR TO USE ☑ YES ☐ NO ☐ NOT USED

GAUGE LOCATION : ☑ STANDPIPE ☐ G.H. on Expansion Trunk ☐ OTHER :

CORRECTED MEASURE : w = Wedge corrected, t = Trim corrected

* GAUGE POSITION: C = Center of tank F = Forward of Center A = Aft of Center

SAMPLES DRAWN : 2X1QT PER TANK

API @ 60F / DENSITY @ 15C SOURCE :

S & W - VOL % : SOURCE :

S & W - VOL : WCF TABLE : (t)

NET STANDARD VOLUME	
GROSS STANDARD WEIGHT	
NET STANDARD WEIGHT	
TOTAL CALC. VOL. DEPARTURE	

BALLAST TANKS PERMANENT ☑ YES IF ☐ NO (SEE F-15 BALLAST TANKS)

SEASUCTION SEAL #'S :

DRAFT: FWD (P) 9-6 AFT (P) 9-6 LIST : º (P) / (S)

(S) 9-6 (S) 9-6

SEA CONDITION: CALM IN PORT

T. MC DONALD

VESSEL'S STAFF INSPECTOR

REMARKS :

^ VOLUME CALCULATED IN ACCORDANCE WITH	
¤ LIQUID LEVEL GAUGES IN ACCORDANCE WITH	API MPMS 17.2.5.2
§ TEMPERATURE DETERMINATION IN ACCORDANCE WITH	API MPMS 17.2.5.3

Copyright SGS-OG&C 2001 - Rev April 2005

Services rendered according to published General Terms and Conditions

12/10/08

F-16

Page [illegible] of [illegible]

PORT / TERMINAL: Lake Charles, La / Citgo		OFFICE: LAKE CHARLES, LA	TEL: (337) 625-1455
VESSEL: CCL 26	VOY #:	INSPECTOR(S): TM	SGS FILE: 121871
DATE: 12/8/2008 CARGO: Spent Caustic		CLIENT:	REF:

SGS

☑ OBQ ☐ ROB MEASUREMENT

NOTE: DO NOT USE V.C.F. IF TEMPERATURE IS NOT TAKEN

Oil Gas & Chemicals Services Division.

UNITS: ☑ FT-IN ☐ FT ☐ MM ☐ OTHER:

UNITS: ☑ BBLS ☐ U.S. GALS ☐ M³ ☐ OTHER:

TANK #	REFERENCE HEIGHT	OBSERVED REFERENCE HEIGHT	*	OBSERVED INNAGE	FREE WATER INNAGE	NON-LIQUID INNAGE	AVG. TEMP	CORRECTED MEASURE	TOTAL OBSERVED VOLUME	^ V.C.F. (t)	FREE WATER VOLUME	NON-LIQUID VOLUME	LIQUID VOLUME
1C	16-2-12	16-2-1/2		0-0-0/0	NIL	NIL	60	0-0-0/0	0.00		0.00	0.00	0.00
2C	16-2-1/2	16-2-1/2		0-0-0/0	NIL	NIL	60	0-0-0/0	0.00		0.00	0.00	0.00
3C	16-2-3/4	16-2-3/4		0-0-0/0	NIL	NIL	60	0-0-0/0	0.00		0.00	0.00	0.00
								TOTALS	0.00		0.00	0.00	0.00

^ VOLUME CALCULATED IN ACCORDANCE WITH ASTM D 1250-04

On behalf of our client(s) we would like to bring to your attention that in our opinion :

Bbls of LIQUID MATERIAL

Bbls of NON-LIQUID MATERIAL

remains on board your vessel. To the extent we are aware of contractual relationships, this material belongs to our client(s) and should be pumped ashore. In case you are unable to do so please indicate your reasons below. In any event, we have to advise our client(s) of the above and reserve his right to seek compensation for the undelivered amount. Statements with regards to flowability and similar advisory services express personal opinions without responsibility for SGS.

d = dip, u = Ullage; corrected measure, w = Wedge corrected, t = Trim corrected

GAUGE LOCATION: ☑ STANDPIPE ☐ G.H. on Expansion trunk ☐ OTHER:

* GAUGE POSITION: C = Center of tank F = Forward of Center A = Aft of Center

OBQ SAMPLED ☐ YES ☑ NO IF NO REASON

OBQ TESTED ☐ YES ☑ NO IF NO REASON

ROB SAMPLED ☐ YES ☑ NO IF NO REASON

DRAFT: FWD (P) 1-6 AFT (P) 2-0 LIST: º (P) / (S)

(S) 1-6 (S) 2-0

SEA CONDITION: CALM IN PORT

VESSEL'S STAFF	TIM MC DONALD INSPECTOR

Copyright SGS-OG&C 1997 - Rev April 2005

Services rendered according to published General Terms and Conditions

SGS

NOT UNLOADED BY.

Inspection Report (LOADING)

Subject : CCL 26
Product : SPENT CAUSTIC
Client ref.: TBD

Date : 12/26/2008
Location : LAKE CHARLES / CITGO
Client : CES ENVIRONMENTAL SERVICES

Our ref.: 126337

Summary of Figures

	Bbls @ 60°F	Gallons @ 60°F	Long Tons	Metric Tonnes	Pounds
Shore Measurements					
Total Shore figures delivered GSV	8,183.25	343,696.50			
Average API Gravity @ 60°F					
Shoretanks no(s): TANK 182, TANK 182					
Vessel's Measurements					
Vessel's figures before loading (OBQ) Free Water	0.00				
Vessel's figures before loading (OBQ) Liquid	0.00				
Vessel's figures before loading (OBQ) Non Liquid	0.00				
Vessel's figures before loading (OBQ) Total	0.00	0.00			
Vessel's figures TCV on board after loading	8,340.66	350,307.72			
Vessel's figures TCV loaded	8,340.66	350,307.72			
Vessel's figures Free Water loaded	0.00	0.00			
Vessel's figures GSV loaded	8,340.66	350,307.72			

Cargo stowage Cargo tanks no(s): CCL 26[1-3C]

Samples

SHORE TANK - 2X1 QUART RUNNING BARGES - 2X1 QUART RUNNING PER CARGO TANK

Quality

NONE

Time Log

12/24/2008	1320	INSPECTOR NOTIFIED
	1345	BARGE ARRIVED
	1400	BARGE DOCKED AT C-SLIP
	1420	INSPECTOR ARRIVED
	1430	COMMENCED OBQ INSPECTION
	1445	COMPLETED OBQ INSPECTION
	1505	STK 182 GAUGED, SAMPLED, TEMPED OPEN
	1720	HOSE CONNECTED
	1855	COMMENCED LOADING FROM STK 182
12/25/2008	0945	SHUTDOWN / AWAITING AVAILABLE PRODUCT
	1040	STK 182 GAUGED AND TEMPED CLOSED
	1745	STK 182 GAUGED, SAMPLED, TEMPED OPEN
	2015	RESUMED LOADING FROM STK 182

SGS North America Inc. | Oil, Gas & Chemicals Services
4701 E. NAPOLEON SULPHUR, LA 70663 t((337) 625-1455) f((337) 625-1721) www.sgs.com

Member of the SGS Group (Société Générale de Surveillance)

SGS

12/26/2008	0020	COMPLETED LOADING / TANKERMAN STOPPED LOAD
	0025	COMMENCED CARGO INSPECTION
	0040	HOSE DISCONNECTED
	0050	COMPLETED CARGO INSPECTION
	0130	CALCULATIONS COMPLETED
	0200	INSPECTOR DEPARTED

Additional events, Stoppages and Delays

12/25/2008	0945	SHUTDOWN / AWAITING AVAILABLE PRODUCT
	1745	STK 182 GAUGED, SAMPLED, TEMPED OPEN

BRETT DAIGLE
for SGS Oil, Gas & Chemicals Services
12/29/2008

Shore volume calculated in accordance with:
Vessel volume calculated in accordance with:
Procedures as per applicable MPMS Chapter 3.1a, 7, 8.1 or 8.2, 12.1 or 12.2, 17.1, 17.2, 17.4.

Disclaimer

This document is issued by the Company under its General Conditions of Service accessible at http://www.sgs.com/terms_and_conditions.htm. The Client's attention is drawn to the limitation of liability, indemnification and jurisdiction issues defined therein.

Any other holder of this document is advised that information contained hereon reflects the Company's findings at the time of its intervention only and within the limits of Client's instructions, if any. The Company's sole responsibility is to its Client and this document does not exonerate parties to a transaction from exercising all their rights and obligations under the transaction documents. Any unauthorized alteration, forgery or falsification of the content or appearance of this document is unlawful and offenders may be prosecuted to the fullest extent of the law.
FIRCC REV. January 2007

F-4

Page 1 of 1

PORT / TERMINAL: LAKE CHARLE / CITGO	OFFICE: LAKE CHARLES, LA TEL: (337) 625-1455
VESSEL: CCL 26 VOY #:	INSPECTOR(S): BELLON
DATE: 12/24/2008	SGS FILE: 126337
CARGO: SPENT CAUSTIC	CLIENT: CES Environmental REF: TBD

SGS

TIME LOG

Oil Gas & Chemicals Services Division.

☑ AT LOADING ☐ AT TRANSFER ☐ AT DISCHARGE

YEAR 2008 / MONTH JAN FEB MAR APR MAY JUN JUL AUG SEP OCT NOV DEC

Date	Hour	
12/24	13:20	INSPECTOR NOTIFIED
12/24	13:45	BARGE ARRIVED
12/24	14:00	BARGE DOCKED AT C-SLIP
12/24	14:20	INSPECTOR ARRIVED
12/24	14:30	COMMENCED OBQ INSPECTION
12/24	14:45	COMPLETED OBQ INSPECTION
12/24	15:05	STK 182 GAUGED, SAMPLED, TEMPED OPEN
12/24	17:20	HOSE CONNECTED
12/24	18:55	COMMENCED LOADING FROM STK 182
12/25	09:45	SHUTDOWN / AWAITING AVAILABLE PRODUCT
12/25	10:40	STK 182 GAUGED AND TEMPED CLOSED
12/25	17:45	STK 182 GAUGED, SAMPLED, TEMPED OPEN
12/25	20:15	RESUMED LOADING FROM STK 182
12/26	00:20	COMPLETED LOADING / TANKERMAN STOPPED LOAD
12/26	00:25	COMMENCED CARGO INSPECTION
12/26	00:40	HOSE DISCONNECTED
12/26	00:50	COMPLETED CARGO INSPECTION
12/26	01:30	CALCULATIONS COMPLETED
12/26	02:00	INSPECTOR DEPARTED

DELAYS AND STOPPAGES :

12/25	09:45	SHUTDOWN / AWAITING AVAILABLE PRODUCT
12/25	17:45	STK 182 GAUGED, SAMPLED, TEMPED OPEN

TIMES MARKED * ARE SUBMITTED TO US.

TIME LOG PAGE 1 OF 1

Copyright SGS-OG&C June 1997 - Rev Oct 2003

Services rendered according to published General Terms and Conditions

CHECKED DATE 6D 12/19/08

F-3A

Page [illegible] of [illegible]

PORT / TERMINAL: LAKE CHARLE / CITGO	OFFICE: LAKE CHARLES, LA TEL: (337) 625-1455
VESSEL: CCL 26 VOY #:	INSPECTOR(S): BELLON
DATE: 12/24/2008	SGS FILE: 126337
CARGO: SPENT CAUSTIC	CLIENT: CES Environmental REF: TBD

SGS

VOYAGE ANALYSIS REPORT

Oil Gas & Chemicals Services Division.

☑ LOADING ☐ V-V TRANSFER ☐ DISCHARGE ☐ SUMMARY				Type of Voyage Simple	C/P DATE
Load Port/Terminal/Berth CITGO Lake Charles	ARRIVED 12/28/2008	SAILED 12/29/2008	Discharge Port/Terminal/Berth	ARRIVED	SAILED
VOLUME UNITS ☑ BBLS ☐ GALS ☐ M³ ☐ L	SUPPLIER CITGO	RECEIVER CES	VCF SHORE LOAD	VCF SHORE DISCH	VCF VESSEL LOAD / VCF VESSEL DISCH

DESCRIPTION	API	TCV	FW	GSV	S&W	NSV	Reference
I. COMPARISON OF SHORE QUANTITIES IN CUSTODY TRANSFER							
Bill of Lading 1.		8183.25	0.00	8183.25			(1)
Outturn 2.							(2)
Diff. 3.							(3)=(2) - (1)
Diff. % 4.							(4) = (3) / (1) x 100
Recalc. B/L 5.	(a)		Recalculate if B/L and O/T use different tables.				(5) (a) Vol. Diff.
II. VESSEL/SHORE QUANTITIES AT (1) LOAD PORT(S)							
Vessel Sailing A.		8340.66	0.00	8340.66	LIQUID	NON-LIQUID	(A)
OBQ (All) B.		0.00	0.00	0.00	0.00	0.00	(B)
Loaded C.		8340.66	0.00	8340.66			(C)=(A) - (B)
Difference D.		157.41	0.00				(D)=(C)-[(1) or (5)]
Difference % E.		1.92%					(E)=(D)/[(1)or(5)]x100
Load Vessel Ratio F.		1.0192					(F)=(C)/[(1)or(5)]
Load VEF G.							(G)
Theoretical Shore H.							(H)=(C) / (G)
Theoretical Shore Diff. I.		-8183.25					(I)=(H) - [(1) or (5)]
Theoretical Shore Diff. % J.		-100.00%					(J)=(I)/[(1) or (5)]x100
III. VESSEL/SHORE QUANTITIES AT ( ) DISCHARGE PORT(S)							
Vessel Arrival K.					LIQUID	NON-LIQUID	(K)
ROB (All) L.							(L)
Discharged M.							(M) = (K) - (L)
Difference N.							(N) = (2) - (M)
Difference % O.							(O) = (N) / (2) x 100
Discharge Vessel Ratio P.							(P) = (M) / (2)
Discharge VEF Q.							(Q)
Theoretical Shore R.							(R) = (M) / (Q)
Theoretical Shore Diff. S.							(S) = (2) - (R)
Theoretical Shore Diff. % T.							(T) = (S) / (2) x 100
III. VESSEL/'S COMPARISON OF LOADING AND DISCHARGE PORT(S) VCF TABLE MUST BE CONSISTENT							
Transit Difference U.							(U) = (K) - (A)
Difference % V.					LIQUID	NON-LIQUID	(V) = (U) / (A) x 100
OBQ/ROB Difference W.							(W) = (L) - (B)

ADJ TCV DIFF : TCV Difference (3) - OBQ (B) + ROB (L) (Quantity) / 0.00	S&W at Load Port : [S&W(1)/GSV(1)]X100	S&W at Disch Port : [S&W(2)/GSV(2)]X100

Comments :

Prepared by : BELLON	Title : INSPECTOR	Company : SGS	Date Completed : 12/25/2008

Copyright SGS-OG&C June 1997 - Rev Oct 2003

Services rendered according to published General Terms and Conditions

CHECKED DATE 12/29/08 BD

F-11 Page 1 of 2

PORT / TERMINAL: LAKE CHARLES	/ CITGO	OFFICE LAKE CHARLES, LA	TEL (337) 625-1455
VESSEL CCL 26	VOY #	INSPECTOR(S): BELLON	SGS FILE 126337
CARGO SPENT CAUSTIC		CLIENT CES Environmental	REF TBD

SGS

SHORE TANK MEASUREMENTS (STATIC) - CHEMICALS

☑ AT LOADING ☐ AT TRANSFER ☐ AT DISCHARGE Oil Gas & Chemicals Services Division.

SHORETANK # 182 REF HEIGHT GAUGE UNITS ☑ FT - IN ☐ FT ☐ MM ☐ OTHER :

OPEN DATE : 12/24/2008 TIME : 15:05 CLOSE DATE : 12/25/2008 TIME : 10:40

OBS. REF. HEIGHT	§ INNAGE	¤ WATER INNAGE	OBS. REF. HEIGHT	§ INNAGE	¤ WATER INNAGE
28-10	26-4-1/4	23-0-14	8-10-1/2	6-4-3/4	3-4-1/2

§ MEASUREMENTS TAKEN IN ACCORDANCE WITH :

¤ FREE WATER DETERMINED IN ACCORDANCE WITH :

TEMPERATURES TAKEN IN ACCORDANCE WITH : API MPMS 7.6.4

^ VOLUME CALCULATED IN ACCORDANCE WITH :

PROD TEMP	65.1 x 0.875 =	56.9625	PROD TEMP	64.8 x 0.875 =	56.7000
(+) AIR TEMP	72.0 x 0.125 =	9.0000	(+) AIR TEMP	69.0 x 0.125 =	8.6250
TANK SHELL TEMPERATURE	=	66	TANK SHELL TEMPERATURE	=	65

ROOF CORRECTION INFO - STANDARD API:

CRITICAL ZONE RANGE FROM TO ROOF LEG ☐ HIGH ☑ LOW

	OPEN	CLOSE
AVG INN/ULL IN CRITICAL ZON	☐ YES ☐ NO	☐ YES ☐ NO
SIDEGAUGE	26-5-1/8	6-7-3/8
TEMPERATURES ºF	# ☑ PROBE ☐ MERCURY	# ☑ PROBE ☐ MERCURY
* ACTION TAKEN :	☐ U ☐ M ☐ L	☐ U ☐ M ☐ L
	☑ M 65.1	☑ M 64.8
	☐ OTHER*	☐ OTHER*
SIDETEMP/REMOTE		

PROBE WAS CHECKED PRIOR TO USE ☑ YES ☐ NO ☐ NOT USED

SAMPLING	☐ U ☐ M ☐ L	☐ U ☐ M ☐ L
* ACTION TAKEN :	☐ T ☐ B ☑ R	☐ T ☐ B ☐ R
	☐ OTHER*	☐ OTHER*
AT ULLAGES :		
CALDATE	Ref TSh Temp : 60	OP TEMP :

INSPECTOR:	BELLON	BELLON
WITNESS:		
☐ API @ 60ºF		
☐ REL DENS 60ºF/60ºF		
☐ DENSIT Lb/Gal @		
SOURCE:		
☐ DENS CORR ºF/ºC		
☑ ^ VCF TABLE		
AMBIENT AIR TEMP	72.0	69.0
TEMP OF TANK SHELL	66	65
SOURCE ☐ SGS ☐ CLIENT ☐ TABLE :		
AVG TEMP (0.5ºF)	65.0	65.0
AVG INNAGE	26-4-1/4	6-4-3/4
AVG WATER INNAGE	23-0-14	3-4-1/2
VOLUME UNITS ☑ BBLS ☐ M³ ☐ OTHER :		
TABLE VOLUME **	8457.28	2020.84
FREE WATER	0.00	0.00
OBSERVED VOLUME	8457.28	2020.84
TANK SHELL CORR.	1.00000	1.00000
OBSERVED VOLUME	8457.28	2020.84
ROOF CORRECTION	0.00	0.00
PRODUCT VOLUME	8457.28	2020.84
V.C.F.	1.00000	1.00000
VOLUME @ 60	8457.28	2020.84
DIFFERENCE	6436.44	
DENSITY Lb/Gal @ 60	0.00000	0.00000
WEIGHT (LBS)	0.000	0.000
DIFFERENCE	0.000	
** IS TABLE VOLUME IN ☑ BBLS ☐ M³ ☐ OTHER :		

CHECKED

DATE

BD 12/29/08

Copyright SGS-OG&C 2001 - Rev April 2005

Services rendered according to published General Terms and Conditions

F-11 Page [illegible] of [illegible]

PORT / TERMINAL: LAKE CHARLES	/ CITGO	OFFICE LAKE CHARLES, LA	TEL (337) 625-1455
VESSEL CCL 26	VOY #	INSPECTOR(S): BELLON	SGS FILE 126337
CARGO SPENT CAUSTIC		CLIENT CES Environmental	REF TBD

SGS

SHORE TANK MEASUREMENTS (STATIC) - CHEMICALS

☑ AT LOADING ☐ AT TRANSFER ☐ AT DISCHARGE Oil Gas & Chemicals Services Division.

SHORETANK # 182 REF HEIGHT GAUGE UNITS ☑ FT - IN ☐ FT ☐ MM ☐ OTHER :

OPEN DATE : 12/25/2008 TIME : 17:45 CLOSE DATE : 12/26/2008 TIME : 1:35

OBS. REF. HEIGHT	§ INNAGE	¤ WATER INNAGE	OBS. REF. HEIGHT	§ INNAGE	¤ WATER INNAGE
17-7-3/4	15-2	12-0-7/8	12-3	9-9	6-6-1/2

§ MEASUREMENTS TAKEN IN ACCORDANCE WITH :

¤ FREE WATER DETERMINED IN ACCORDANCE WITH :

TEMPERATURES TAKEN IN ACCORDANCE WITH : API MPMS 7.6.4

^ VOLUME CALCULATED IN ACCORDANCE WITH :

PROD TEMP	70.3 x 0.875 =	61.5125	PROD TEMP	68.1 x 0.875 =	59.5875
(+) AIR TEMP	70.3 x 0.125 =	8.7875	(+) AIR TEMP	68.1 x 0.125 =	8.5125
TANK SHELL TEMPERATURE	=	70	TANK SHELL TEMPERATURE	=	68

ROOF CORRECTION INFO - STANDARD API:

CRITICAL ZONE RANGE FROM TO ROOF LEG ☐ HIGH ☑ LOW

	OPEN	CLOSE
AVG INN/ULL IN CRITICAL ZON	☐ YES ☑ NO	☐ YES ☑ NO
SIDEGAUGE		
TEMPERATURES °F	# ☑ PROBE ☐ MERCURY	# ☑ PROBE ☐ MERCURY
* ACTION TAKEN :	☐ U ☐ M ☐ L	☐ U ☐ M ☐ L
	☐ M 70.3	☐ M 68.1
	☐ OTHER*	☐ OTHER*
SIDETEMP/REMOTE		
PROBE WAS CHECKED PRIOR TO USE	☑ YES ☐ NO ☐ NOT USED	
SAMPLING	☐ U ☐ M ☐ L	☐ U ☐ M ☐ L
* ACTION TAKEN :	☐ T ☐ B ☑ R	☐ T ☐ B ☐ R
	☐ OTHER*	☐ OTHER*
AT ULLAGES :		
CAL DATE:	Ref TSh Temp : 60	OP TEMP :

INSPECTOR:	BELLON	BELLON
WITNESS:		
☐ API @ 60°F		
☐ REL DENS 60°F/60°F		
☐ DENSIT Lb/Gal @		
SOURCE:		
☐ DENS CORR °F/°C		
☐ ^ VCF TABLE		
AMBIENT AIR TEMP	70.3	68.1
TEMP OF TANK SHELL	70	68
SOURCE ☐ SGS ☐ CLIENT ☐ TABLE :		
AVG TEMP (0.5°F)	70.5	68.0
AVG INNAGE	15-2	9-9
AVG WATER INNAGE	12-0-7/8	6-6-1/2
VOLUME UNITS ☑ BBLS ☐ M³ ☐ OTHER :		
TABLE VOLUME **	4848.85	3102.04
FREE WATER	0.00	0.00
OBSERVED VOLUME	4848.85	3102.04
TANK SHELL CORR.	1.00000	1.00000
OBSERVED VOLUME	4848.85	3102.04
ROOF CORRECTION	0.00	0.00
PRODUCT VOLUME	4848.85	3102.04
V.C.F.	1.00000	1.00000
VOLUME @ 60	4848.85	3102.04
DIFFERENCE	1746.81	
DENSITY Lb/Gal @ 60	0.00000	0.00000
WEIGHT (LBS)	0.000	0.000
DIFFERENCE	0.000	
** IS TABLE VOLUME IN ☑ BBLS ☐ M³ ☐ OTHER :		

CHECKED DATE 60 12/29/08

Copyright SGS-OG&C 2001 - Rev April 2005

Services rendered according to published General Terms and Conditions

F-16

Page [illegible] of [illegible]

PORT / TERMINAL: LAKE CHARLES / CITGO		OFFICE: LAKE CHARLES, LA	TEL: (337) 625-1455
VESSEL: CCL 26	VOY #:	INSPECTOR(S): BELLON	SGS FILE: 126337
DATE: 12/24/2008 CARGO: SPENT CAUSTIC		CLIENT: CES Environmental	REF: TBD

SGS

☑ OBQ ☐ ROB MEASUREMENT

NOTE: DO NOT USE V.C.F. IF TEMPERATURE IS NOT TAKEN

Oil Gas & Chemicals Services Division.

UNITS: ☑ FT-IN ☐ FT ☐ MM ☐ OTHER: | UNITS: ☑ BBLS ☐ U.S. GALS ☐ M³ ☐ OTHER:

TANK #	REFERENCE HEIGHT	OBSERVED REFERENCE HEIGHT	*	OBSERVED INNAGE	FREE WATER INNAGE	NON-LIQUID INNAGE	AVG. TEMP	CORRECTED MEASURE	TOTAL OBSERVED VOLUME	^ V.C.F. (t)	FREE WATER VOLUME	NON-LIQUID VOLUME	LIQUID VOLUME
1	16-2-1/2	16-2-1/2	C	0-0	0-0	0-0		0-0	0.00	1.00000	0.00	0.00	0.00
2	16-2-1/2	16-2-1/2	C	0-0	0-0	0-0		0-0	0.00	1.00000	0.00	0.00	0.00
3	16-2-3/4	16-2-3/4	C	0-0	0-0	0-0		0-0	0.00	1.00000	0.00	0.00	0.00
								TOTALS	0.00		0.00	0.00	0.00

^ VOLUME CALCULATED IN ACCORDANCE WITH

On behalf of our client(s) we would like to bring to your attention that in our opinion :

Bbls of LIQUID MATERIAL

Bbls of NON-LIQUID MATERIAL

remains on board your vessel. To the extent we are aware of contractual relationships, this material belongs to our client(s) and should be pumped ashore. In case you are unable to do so please indicate your reasons below. In any event, we have to advise our client(s) of the above and reserve his right to seek compensation for the undelivered amount. Statements with regards to flowability and similiar advisory services express personal opinions without responsibility for SGS.

d = dip, u = Ullage; corrected measure, w = Wedge corrected, t = Trim corrected

GAUGE LOCATION: ☑ STANDPIPE ☐ G.H. on Expansion trunk ☐ OTHER:

* GAUGE POSITION: C = Center of tank F = Forward of Center A = Aft of Center

OBQ SAMPLED ☐ YES ☑ NO IF NO REASON

OBQ TESTED ☐ YES ☐ NO IF NO REASON

ROB SAMPLED ☐ YES ☐ NO IF NO REASON

DRAFT: FWD (P) 2-0 AFT (P) 1-6 LIST: º (P) / (S)

(S) 2-0 (S) 1-6

SEA CONDITION: CALM IN PORT

	STEVE BELLON
VESSEL'S STAFF	INSPECTOR

CHECKED

DATE 01 02 09

Copyright SGS Octal 1997 - Rev April 2005

Services rendered according to published General Terms and Conditions

F-20

Page of

PORT / TERMINAL: LAKE CHARLES / CITGO		OFFICE: LAKE CHARLES, LA	TEL: (337) 625-1455
VESSEL: CCL 26	VOY #:	INSPECTOR(S): BELLON	SGS FILE: 126337
DATE: 2/24/2008 CARGO: SPENT CAUSTIC		CLIENT: CES Environmental	REF: TBD

SGS

VESSEL MEASUREMENT SYSTEM(CHEMICALS)

☐ OPEN ☑ CLOSE / RESTRICTED

☐ ARRIVAL ☑ DEPARTURE

Oil Gas & Chemicals Services Division.

☑ AT LOADING ☐ AT TRANSHIPMENT ☐ AT DISCHARGE | ☑ CARGO TANKS ☐ BALLAST TANKS ☐ NON/OTHER CARGO

UNITS : ☑ FT-IN ☐ FT ☐ MM ☐ OTHER : | UNITS : ☑ BBLS ☐ U.S. GALS ☐ M³ ☐ OTHER :

TANK #	REFERENCE HEIGHT	OBSERVED REFERENCE HEIGHT	¤ ULLAGE	WATER INNAGE	TEMPERATURE °F § PROBE	AVG. TEMP	CORRECTED MEASURE	TOTAL VOLUME	FREE WATER	PRODUCT VOLUME ^	V.C.F.	VOLUME @ 60°F	*
1	16-2-1/2		4-0	0-0	66.2	66.0	12-2-1/2	2923.02	0.00	2923.02	1.00000	2923.02	C
2	16-2-1/2		5-11-1/8	0-0	65.9	66.0	10-5-3/8	2876.82	0.00	2876.82	1.00000	2876.82	C
3	16-2-3/4		5-11-1/8	0-0	66.0	66.0	10-3-5/8	2540.82	0.00	2540.82	1.00000	2540.82	C
							TOTALS	8340.66	0.00	8340.66		8340.66	

PROBE WAS CHECKED PRIOR TO US ☑ YES ☐ NO ☐ NOT USED

GAUGE LOCATION ☑ STANDPIPE ☐ G.H. on Expansion trun

☐ OTHER :

* GAUGE POSITION: C = Center of tank F = Forward of Center A = Aft of Center

^ VOLUME CALCULATED IN ACCORDANCE WITH

¤ LIQUID LEVEL GAUGES IN ACCORDANCE WITH API MPMS 17.2.6.1.2

§ TEMPERATURE DETERMINATION IN ACCORDANCE WITH API MPMS 17.2.6.1.2

UPON COMPLETION OF DISCHARGE ALL CARGO TANKS WERE FOUND TO BE

WELL DRAINED ☐ YES ☐ NO (SEE F-20 DEPARTURE)

SAMPLES DRAWN : 3X1 QT RUNNING

DRAFT: FWD (P) 9-0 AFT (P) 9-0 LIST :

(S) 9-0 (S) 9-0

SEA CONDITION: CALM IN PORT

CHECKED

DATE

VESSEL'S STAFF | INSPECTOR

VESSEL QUANTITIES

BARRELS	8340.66 at °F/°	POUNDS	
U.S. GAL.	350307.72 at °F/°	LONG TONS	
M³	at °F/°	KILOGRAMS	
		METRIC TON	

☐ API @ 60F ☐ COTE * 1000000

☐ STANDARD RELATIVE DENSITY

SOURCE : ☐ SGS ☐ CLIENT ☐ OTHER (SPECIFY)

☐ STANDARD DENSITY Lbs/Gal at °F/°C

DENSITY WATER Lbs/Gal at °F/°C

☐ DENSITY CORRECTION PER °F/°C

☑ ^ V.C.F. TABLE

SOURCE : ☐ SGS ☑ CLIENT ☐ OTHER (SPECIFY)

Copyright SGS OGIC 2001 Rev April 2005

Services rendered according to published General Terms and Conditions

EL 02/29/08

F-7 Page [illegible] of [illegible]

PORT / TERMINAL: LAKE CHARLE / CITGO	OFFICE: LAKE CHARLES, LA TEL: (337) 625-1455
VESSEL: CCL 26 VOY #:	INSPECTOR(S): BELLON
DATE: 12/24/2008	SGS FILE: 126337
CARGO: SPENT CAUSTIC	CLIENT: CES Environmental REF: TBD

SGS

INFORMATION FOR CLEANLINESS INSPECTION

Oil Gas & Chemicals Services Division.

☑ AT LOADING ☐ AT TRANSFER ☐ AT DISCHARGE ☐ SHORE ☑ VESSEL

THE INFORMATION ON THIS LIRIS F-7 WILL BE USED TO COMPLETE LIRIS F-9 WAS SUBMITTED TO US BY THE PERSON(S) INDICATED BELOW

WE CONSULTED FOR TANK INSPECTION ON (DATE) 12/24/2008 (TIME) 14:30 WITH:

☐ VESSEL'S STAFF ☐ BARGE OPERATOR ☐ TERMINAL REPRESENTATIVE ☐ CHARTERER

☐ OTHER (SPECIFY):

PLEASE PRINT NAME(S)

TANK MATERIAL:					
TANK #:	1-3C				
MATERIAL	MILD STEEL				
COATING NAME	N/A				
APPARENT CONDITION *	ACCEPTABLE				
TANK #:					
MATERIAL					
COATING NAME					
APPARENT CONDITION *					

COATING WAS CHECKED AGAINST ☐ MANUFACTURERS ☐ OTHER (SPECIFY) CHECKLIST

IF NOT CHECKED, REASO

* SELECT: e.g. % MISSING % DISCOLORED %PEELING ACCEPTABLE etc. (ALL PERCENTAGES ARE APPROXIMATIONS)

OUR INSPECTION FOR F-9 COVERS THE CLEANLINESS OF THE COATINGS, NOT ITS SUITABILITY IN REGARD TO CARGO CONTAMINATION.

PREVIOUS CARGOES:

TANK#	THIRD LAST	SECOND LAST	LAST	COMPATIBLE
1-3C	UNKNOWN	UNKNOWN	SPENT CAUSTIC	☑ YES ☐ NO
				☐ YES ☐ NO
				☐ YES ☐ NO
				☐ YES ☐ NO
				☐ YES ☐ NO
				☐ YES ☐ NO
				☐ YES ☐ NO
				☐ YES ☐ NO

LINES - PUMPS:

NAME	MATERIAL	LAST USED FOR	PRESSED WITH INERT GAS/AIR
			☐ YES ☐ NO PRESSURE
			☐ YES ☐ NO PRESSURE
			☐ YES ☐ NO PRESSURE
			☐ YES ☐ NO PRESSURE
			☐ YES ☐ NO PRESSURE

THE CLEANLINESS CONDITION OF THE CARGO PUMPS AND LINES CANNOT BE ASCERTAINED BY VISUAL EXAMINATION. IT IS RECOMMENDED TO TEST "LINE" SAMPLES PRIOR TO COMMENCING THE TRANSFER AND "FIRST-IN" SAMPLES AT THE START OF THE TRANSFER TO MINIMIZE CARGO CONTAMINATION.

VESSEL REPRESENTATIVE

STEVE BELLON
INSPECTOR

CHECKED DATE 12/24/08

Copyright SGS-OG&C 1995 - Rev Oct 2003

Services rendered according to published General Terms and Conditions

F-9 Page [illegible] of [illegible]

PORT / TERMINAL: LAKE CHARLE / CITGO	OFFICE: LAKE CHARLES, LA TEL: (337) 625-1455
VESSEL: CCL 26 VOY #:	INSPECTOR(S): BELLON
DATE: 12/24/2008	SGS FILE: 126337
CARGO: SPENT CAUSTIC	CLIENT: CES Environmental REF: TBD

SGS

TANK CLEANLINESS INSPECTION

Oil Gas & Chemicals Services Division.

☑ AT LOADING ☐ AT TRANSFER ☐ AT DISCHARGE

☑ AS INSPECTION ONLY ☐ AS PRE-INSPECTION ☐ WITH CUSTODY TRANSFER

USE A SEPARATE FORM F-9 PER INSPECTION

THIS IS THE ☑ FIRST ☐ SECOND ☐ THIRD _____ TH INSPECTION

TANK(S): 1-3C

BASED ON SUBMITTED INFORMATION (SEE LIRIS F-7) AND :

☐ VISUAL CHECK FOR RESIDUES FROM DECKLEVEL (SEE LIRIS F-15 OR F-20)
☑ MEASURING OF RESIDUES FROM DECK LEVEL (SEE LIRIS F-16)
☐ PHYSICAL ENTRY (TANK SAFE ATMOSPHERE STATEMENT BELOW MUST BE COMPLETED PRIOR TO ENTRY)

AND ☐ VISUAL INSPECTION
AND ☐ WALLWASHING (ANALYTICAL REPORT ON FILE)
AND ☐ TESTING OF HEATING COILS

☑ WERE ACCEPTED FOR CLEANLINESS TO CARRY A CARGO OF SPENT CAUSTIC

☐ WERE REJECTED FOR CLEANLINESS TO CARRY A CARGO OF _____

REASON : _____

☐ SHIP'S STAFF AND/OR ☐ SGS SUPERVISOR AND/OR ☐ CLIENT NOTIFIED ON BY

☑ INSPECTION COMPLETED AT 14:45 HRS ON THE 12/24/2008

☐ TANK(S) SUBJECT TO A FINAL INSPECTION AT LOADING BERTH IN CASE OF PRE-INSPECTION

SIGNATURES : _____ FOR VESSEL _____ FOR TERMINAL STEVE BELLON INSPECTOR

* IS THIS TANK ACCEPTANCE BASED SOLELY ON SUBMITTED INFORMATION EVALUATION ? ☐ YES ☐ NO

IF YES; ISSUE N.O.A.D. AND INFORM YOUR ☐ SGS SUPERVISOR AND/OR ☐ CLIENT(S) IMMEDIATELY.

TANK SAFE ATMOSPHERE STATEMENT

The undersigned certifies that those tank(s) indicated on line 13 of this page have been cleaned and gas freed as reported on the reverse side of the SGS F-7 and that the tank(s) in question are in all respects safe for entry.
The undersigned hereby grants permission for SGS personnel to enter said tanks.

Tank Safe Atmosphere Statement signed _____ hours on _____

SIGNATURES : _____ FOR VESSEL _____ FOR TERMINAL

PRINT NAME (S) : _____ _____

NOTE: DO NOT ENTER THE TANK(S) if this TANK SAFE ATMOSPHERE STATEMENT is not signed and contact your supervisor for further instructions.

Copyright SGS-OG&C 1995 - Rev Oct 2003 Services rendered according to published General Terms and Conditions

CHECKED DATE

SGS

Inspection Report (LOADING)

Subject : CCL 7
Product : SPENT CAUSTIC
Client ref.: TBD

Date : 2/5/2009
Location : Lake Charles, La / Citgo
Client : CES ENVIRONMENTAL SERVICES

Our ref.: 129435

Summary of Figures

		Bbls @ 60°F	Gallons @ 60°F
Shore Measurements			
Total Shore figures delivered	GSV	8,059.14	338,483.88
Average API Gravity @ 60°F	NSV		
Shoretanks no(s):	TANK # 182 ,1ST, TANK #182,2ND		
Vessel's Measurements			
Vessel's figures before loading (OBQ) Free Water		0.00	
Vessel's figures before loading (OBQ) Liquid		39.86	
Vessel's figures before loading (OBQ) Non Liquid		0.00	
Vessel's figures before loading (OBQ) Total		39.86	1,674.12
Vessel's figures TCV on board after loading		8,199.24	344,368.08
Vessel's figures TCV loaded		8,159.38	342,693.96
Vessel's figures Free Water loaded		0.00	0.00
Vessel's figures GSV loaded		8,159.38	342,693.96

68 loads

Cargo stowage Cargo tanks no(s): CCL 7[1, 2, 3]

Samples

SHORE TANK: 2 QUARTS RUNNING

DOCKLINE: ***2 QUARTS*** - 1X1 QUART AT START AND 1X1 QUART AFTER START
VESSEL: 2 QTS RUNNING

Quality

NO ANALYSIS REQUESTED

Time Log

2/3/2009	0045	INSPECTOR NOTIFIED OF VESSELS ARRIVAL
	0125	VESSEL ARRIVED AT TERMINAL
	0135	VESSEL DOCKED AT CITGO'S C-SLIP
	0145	INSPECTOR ARRIVED AT TERMINAL
	0235	COMMENCE SHORE STANK # 182 1ST OPENING INSPECTION
	0250	COMPLETED SHORE TANK # 182 OPENING INSPECTION
	0310	COMMENCE BARGE OPENING INSPECTION
	0325	COMPLETED BARGE OPENING INSPECTION
	0600	1X8" CARGO HOSE CONNECTED
	0635	COMMENCE LOADING
	1735	STOPPED LOADING(SHORE TANK EMPTY)
	1850	INSPECTOR NOTIFIED
	1915	INSPECTOR ARRIVED AT TERMINAL

SGS

	1940	COMMENCE SHORE TANK # 182 CLOSING INSPECTION
	1955	COMPLETED SHORE TANK # 182 CLOSING INSPECTION
	2000	COMMENCE TRANSFER TO SHORE TANK 182
2/4/2009	0530	1X8" CARGO HOSE DISCONNECTED
2/5/2009	0720	INSPECTOR NOTIFIED
	0750	INSPECTOR ARRIVED AT TERMINAL
	0800	COMPLETED TRANSFER FROM SHORE TANK # 185 TO # 182
	0905	COMMENCE SHORE TANK # 182 OPENING INSPECTION(2ND)
	0920	COMPLETED SHORE TANK # 182 OPENING INSPECTION
	1535	INSPECTOR NOTIFIED
	1610	INSPECTOR ARRIVED
	1715	SHUTDOWN LOADING / AWAITING CRUDE SHIP TO BERTH
	1910	RESUMED LOADING FROM STK 182
	2010	COMPLETED LOADING / MAX. DRAFT
	2040	HOSE DISCONNECTED
	2100	INSPECTOR NOTIFIED
	2125	INSPECTOR ARRIVED
	2130	COMMENCED CARGO INSPECTION
	2150	COMPLETED CARGO INSPECTION
	2220	STK 182 GAUGED AND TEMPED CLOSED
	2300	INSPECTOR DEPARTED

Additional events, Stoppages and Delays

2/5/2009	1715	SHUTDOWN LOADING / AWAITING CRUDE SHIP TO BERTH
	1910	RESUMED LOADING FROM STK 182

STEVE CROSS
for SGS Oil, Gas & Chemicals Services
2/6/2009

Shore volume calculated in accordance with:
Vessel volume calculated in accordance with:
Procedures as per applicable MPMS Chapter 3.1a, 7, 8.1 or 8.2, 12.1 or 12.2, 17.1, 17.2, 17.4

Disclaimer

This document is issued by the Company under its General Conditions of Service accessible at http://www.sgs.com/terms_and_conditions.htm The Client's attention is drawn to the limitation of liability, indemnification and jurisdiction issues defined therein.

Any other holder of this document is advised that information contained hereon reflects the Company's findings at the time of its intervention only and within the limits of Client's instructions, if any The Company's sole responsibility is to its Client and this document does not exonerate parties to a transaction from exercising all their rights and obligations under the transaction documents. Any unauthorized alteration, forgery or falsification of the content or appearance of this document is unlawful and offenders may be prosecuted to the fullest extent of the law.
FIRCC REV January 2007

F-4

PORT / TERMINAL: Lake Charles, La / Citgo	OFFICE: LAKE CHARLES, LA TEL: (337) 625-1455
VESSEL: CCL 7 VOY #: N/A	INSPECTOR(S): J.L.DYKES
DATE: 2/3/2009	SGS FILE: 129435
CARGO: Spent Caustic	CLIENT: CES ENV. REF: TBN

SGS

TIME LOG

Oil Gas & Chemicals Services Division.

☑ AT LOADING ☐ AT TRANSFER ☐ AT DISCHARGE

YEAR 2009 / MONTH JAN FEB MAR APR MAY JUN JUL AUG SEP OCT NOV DEC

Date	Hour	
2/3	00:45	INSPECTOR NOTIFIED OF VESSELS ARRIVAL
2/3	01:25	VESSEL ARRIVED AT TERMINAL
2/3	01:35	VESSEL DOCKED AT CITGO'S C-SLIP
2/3	01:45	INSPECTOR ARRIVED AT TERMINAL
2/3	02:35	COMMENCE SHORE STANK # 182 1ST OPENING INSPECTION
2/3	02:50	COMPLETED SHORE TANK # 182 OPENING INSPECTION
2/3	03:10	COMMENCE BARGE OPENING INSPECTION
2/3	03:25	COMPLETED BARGE OPENING INSPECTION
2/3	06:00	1X8" CARGO HOSE CONNECTED
2/3	06:35	COMMENCE LOADING
2/3	17:35	STOPPED LOADING(SHORE TANK EMPTY)
2/3	18:50	INSPECTOR NOTIFIED
2/3	19:15	INSPECTOR ARRIVED AT TERMINAL
2/3	19:40	COMMENCE SHORE TANK # 182 CLOSING INSPECTION
2/3	19:55	COMPLETED SHORE TANK # 182 CLOSING INSPECTION
2/3	20:00	COMMENCE TRANSFER TO SHORE TANK 182
2/4	05:30	1X8" CARGO HOSE DISCONNECTED
2/5	07:20	INSPECTOR NOTIFIED
2/5	07:50	INSPECTOR ARRIVED AT TERMINAL
2/5	08:00	COMPLETED TRANSFER FROM SHORE TANK # 185 TO # 182
2/5	09:05	COMMENCE SHORE TANK # 182 OPENING INSPECTION(2ND)
2/5	09:20	COMPLETED SHORE TANK # 182 OPENING INSPECTION
2/5	15:35	INSPECTOR NOTIFIED
2/5	16:10	INSPECTOR ARRIVED
2/5	17:15	SHUTDOWN LOADING / AWAITING CRUDE SHIP TO BERTH
2/5	19:10	RESUMED LOADING FROM STK 182
2/5	20:10	COMPLETED LOADING / MAX. DRAFT
2/5	20:40	HOSE DISCONNECTED
2/5	21:00	INSPECTOR NOTIFIED
2/5	21:25	INSPECTOR ARRIVED
2/5	21:30	COMMENCED CARGO INSPECTION
2/5	21:50	COMPLETED CARGO INSPECTION
2/5	22:20	STK 182 GAUGED AND TEMPED CLOSED
DELAYS AND STOPPAGES :		
2/5	17:15	SHUTDOWN LOADING / AWAITING CRUDE SHIP TO BERTH
2/5	19:10	RESUMED LOADING FROM STK 182

CHECKED
DATE

TIMES MARKED * ARE SUBMITTED TO US. TIME LOG PAGE 1 OF 2

Copyright SGS-OG&C June 1997 - Rev Oct 2003 Services rendered according to published General Terms and Conditions

F-4

Page 2 of 2

PORT / TERMINAL: Lake Charles, La / Citgo	OFFICE: LAKE CHARLES, LA TEL: (337) 625-1455
VESSEL: CCL 7 VOY #: N/A	INSPECTOR(S): J.L.DYKES
DATE: 2/3/2009	SGS FILE: 129435
CARGO: Spent Caustic	CLIENT: CES ENV. REF: TBN

SGS

TIME LOG

Oil Gas & Chemicals Services Division.

☑ AT LOADING ☐ AT TRANSFER ☐ AT DISCHARGE

YEAR 2009 / MONTH JAN FEB MAR APR MAY JUN JUL AUG SEP OCT NOV DEC

Date	Hour	
2/5	23:00	INSPECTOR DEPARTED

DELAYS AND STOPPAGES :

CHECKED DATE

TIMES MARKED * ARE SUBMITTED TO US. TIME LOG PAGE 2 OF 2

Copyright SGS-OG&C June 1997 - Rev Oct 2003 Services rendered according to published General Terms and Conditions

F-3A

PORT / TERMINAL: Lake Charles, La / Citgo	OFFICE: LAKE CHARLES, LA TEL: (337) 625-1455
VESSEL: CCL 7 VOY #: N/A	INSPECTOR(S): J.L.DYKES
DATE: 2/3/2009	SGS FILE: 129435
CARGO: Spent Caustic	CLIENT: CES ENV. REF: TBN

SGS

VOYAGE ANALYSIS REPORT

Oil Gas & Chemicals Services Division.

☑ LOADING ☐ V-V TRANSFER ☐ DISCHARGE ☐ SUMMARY | Type of Voyage | C/P DATE

Load Port/Terminal/Berth	ARRIVED	SAILED	Discharge Port/Terminal/Berth	ARRIVED	SAILED

VOLUME UNITS ☐ BBLS ☐ GALS ☐ M³ ☐ L	SUPPLIER	RECEIVER	VCF SHORE LOAD	VCF SHORE DISCH	VCF VESSEL LOAD	VCF VESSEL DISCH

DESCRIPTION	API/DENSITY	TCV	FW	GSV	S&W	NSV	Reference
I. COMPARISON OF SHORE QUANTITIES IN CUSTODY TRANSFER							
Bill of Lading 1.		8059.14	0.00	8059.14			(1)
Outturn 2.							(2)
Diff. 3.							(3)=(2) - (1)
Diff. % 4.							(4) = (3) / (1) x 100
Recalc. B/L 5.	(a)		Recalculate if B/L and O/T use different tables.				(5) (a) Vol. Diff.
II. VESSEL/SHORE QUANTITIES AT ( ) LOAD PORT(S)							
Vessel Sailing A.		8199.24	0.00	8199.24	LIQUID	NON-LIQUID	(A)
OBQ (All) B.		39.86	0.00	39.86	39.86	0.00	(B)
Loaded C.		8159.38	0.00	8159.38			(C)=(A) - (B)
Difference D.		100.24	0.00				(D)=(C)-[(1) or (5)]
Difference % E.		1.24%					(E)=[(D)/[(1)or(5)]]x100
Load Vessel Ratio F.		1.0124					(F)=(C)/[(1)or(5)]
Load VEF G.							(G)
Theoretical Shore H.							(H)=(C) / (G)
Theoretical Shore Diff. I.		-8059.14					(I)=(H) - [(1) or (5)]
Theoretical Shore Diff. % J.		-100.00%					(J)=[(I)/[(1) or (5)]]x100
II. VESSEL/SHORE QUANTITIES AT ( ) DISCHARGE PORT(S)							
Vessel Arrival K.					LIQUID	NON-LIQUID	(K)
ROB (All) L.							(L)
Discharged M.							(M) = (K) - (L)
Difference N.							(N) = (2) - (M)
Difference % O.							(O) = (N) / (2) x 100
Discharge Vessel Ratio P.							(P) = (M) / (2)
Discharge VEF Q.							(Q)
Theoretical Shore R.							(R) = (M) / (Q)
Theoretical Shore Diff. S.							(S) = (2) - (R)
Theoretical Shore Diff. % T.							(T) = (S) / (2) x 100
III. VESSEL/'S COMPARISON OF LOADING AND DISCHARGE PORT(S) VCF TABLE MUST BE CONSISTENT							
Transit Difference U.							(U) = (K) - (A)
Difference % V.					LIQUID	NON-LIQUID	(V) = (U) / (A) x 100
OBQ/ROB Difference W.							(W) = (L) - (B)

ADJ TCV DIFF : TCV Difference (3) - OBQ (B) + ROB (L) (Quantity) / 0.00	[S&W(1)/GSV(1)]X100 S&W at Load Port :	[S&W(2)/GSV(2)]X100 S&W at Disch Port :

Comments :

Prepared by :	Title :	Company :	Date Completed :

CHECKED DATE 2/4/09

Copyright SGS-OG&C June 1997 - Rev Oct 2003 Services rendered according to published General Terms and Conditions

F-1

PORT / TERMINAL: Lake Charles, La / Citgo	OFFICE LAKE CHARLES, LA TEL (337) 625-1455
VESSEL CCL 7 VOY # N/A	INSPECTOR(S): J.L.DYKES
DATE 2/3/2009	SGS FILE 129435
CARGO Spent Caustic	CLIENT CES ENV. REF TBN

SGS

SHORE QUANTITY SUMMARY

Oil Gas & Chemicals Services Division.

☑ AT LOADING ☐ AT TRANSFER ☐ AT DISCHARGE | ☑ SHORE TANK (STATIC) ☐ METER (DYNAMIC)

CUSTODY TRANSFER SAMPLE SHORE TANK

☐ API @ 60°F : ☐ R.D. 60°F/60°F ☐ Density Lbs/Gal @

S&W % VOL:

SOURCE OF ANALYTICAL DATA:

	UNITS	TANK # 182 1ST	TANK #182,2ND	TANK/METER	TANK/METER	TANK/METER
TOTAL CALCULATED VOLUME	BBLS	5102.91	2956.23			
FREE WATER	BBLS	0.00	0.00			
GROSS STANDARD VOLUME	BBLS	5102.91	2956.23			
S & W VOLUME	BBLS					
(NET) STANDARD VOLUME	BBLS					
WCF TABLE ( )						
GROSS STANDARD WEIGHT						
S & W WEIGHT						
(NET) STANDARD WEIGHT						

	UNITS	TANK/METER	TANK/METER	SHORELINE	TOTAL DELIVERED
TOTAL CALCULATED VOLUME	BBLS				8059.14
FREE WATER	BBLS				0.00
GROSS STANDARD VOLUME	BBLS				8059.14
S & W VOLUME	BBLS				
(NET) STANDARD VOLUME	BBLS				
					☐ GSV ☐ NSV ☐ SV @
GROSS STANDARD WEIGHT					
S & W WEIGHT					
(NET) STANDARD WEIGHT					

STOWAGE O/B VESSEL:

B/L DATE:

REMARKS QUANTITY CONFIRMED

with _____ of _____

with _____ of _____

Date _____ Time _____

QUANTITY CHANGES YES NO IF YES STATE REASON

CHECKED DATE 2/4/09

Copyright SGS-OG&C June 1997 - Rev Oct 2003

Services rendered according to published General Terms and Conditions

F-2

PORT / TERMINAL: Lake Charles, La / Citgo	OFFICE: LAKE CHARLES, LA TEL: (337) 625-1455
VESSEL: CCL 7 VOY #: N/A	INSPECTOR(S): J.L.DYKES
DATE: 2/3/2009	SGS FILE: 129435
CARGO: Spent Caustic	CLIENT: CES ENV. REF: TBN

SGS

VESSEL QUANTITY SUMMARY

Oil Gas & Chemicals Services Division.

☑ AT LOADING ☐ AT TRANSFER ☐ AT DISCHARGE ☐ CRUDE OIL ☑ PRODUCTS

☐ API @ 60°F : ☐ R.D. 60°F/60°F ☐ Density Lbs/Gal @

S&W % VOL:

SOURCE OF ANALYTICAL DATA:

	VOLUME		WCF (t)	WEIGHT		
	BBLS	U.S. GALS		POUNDS/KG	LONG TONS	METRIC TONS AIR/VAC
VESSEL'S QUANTITIES	V.E.F. CORRECTED : ☐ YES ☑ NO VEF:					
TOTAL CALCULATED VOL	8199.24	344368.08				
FREE WATER	0.00	0.00				
GROSS STANDARD VOLUME	8199.24	344368.08				
S & W VOLUME						
(NET) STANDARD VOLUME						

☐ OBQ ☐ ROB

LIQUID MATERIAL	39.86	1674.12				
NON-LIQUID MATERIAL	0.00	0.00				
FREE WATER	0.00	0.00				
TOTAL	39.86	1674.12				

☑ LOADED QUANTITIES ☐ DISCHARGED QUANTITIES

TOTAL CALCULATED VOL	8159.38	342693.96				
FREE WATER	0.00	0.00				
GROSS STANDARD VOLUME	8159.38	342693.96				
S & W VOLUME						
(NET) STANDARD VOLUME						

ARE SLOPS INCLUDED IN CALCULATIONS ☐ YES ☐ NO ☐ NO SLOPS ON BOARD

STOWAGE O/B VESSEL:

REMARKS:

CHECKED DATE 2/6/09

Copyright SGS-OG&C 1995 - Rev Oct 2003 Services rendered according to published General Terms and Conditions

F-10

PORT / TERMINAL: Lake Charles, La / Citgo		OFFICE LAKE CHARLES, LA	TEL (337) 625-1455
VESSEL CCL 7	VOY # N/A	INSPECTOR(S): J.L.DYKES	SGS FILE 129435
CARGO Spent Caustic		CLIENT CES ENV.	REF TBN

SGS

SHORE TANK MEASUREMENTS (STATIC)

☑ AT LOADING ☐ AT TRANSFER ☐ AT DISCHARGE Oil Gas & Chemicals Services Division.

SHORETANK # 182 REF HEIGHT: EXT.FLOATER GAUGE UNITS ☑ FT - IN ☐ FT ☐ MM ☐ OTHER:

OPEN DATE: 2/3/2009 TIME: 2:50 CLOSE DATE: 2/3/2009 TIME: 19:55

OBS. REF. HEIGHT	§ INNAGE	¤ WATER INNAGE	OBS. REF. HEIGHT	§ INNAGE	¤ WATER INNAGE
26-10-3/4	23-4-1/2	0-0	10-0	7-6-1/8	0-0

§ MEASUREMENTS TAKEN IN ACCORDANCE WITH :

¤ FREE WATER DETERMINED IN ACCORDANCE WITH :

TEMPERATURES TAKEN IN ACCORDANCE WITH : API MPMS 7.6.4

^ VOLUME CALCULATED IN ACCORDANCE WITH :

PROD TEMP	63.3	x 0.875 = 55.3875	PROD TEMP	54.3	x 0.875 = 47.5125
(+) AIR TEMP		x 0.125 =	(+) AIR TEMP		x 0.125 =
TANK SHELLTEMPERATURE:		= 55	TANK SHELL TEMPERATURE		= 48

ROOF CORRECTION INFO - STANDARD API:

CRITICAL ZONE RANGE FROM 6-3 TO 7-8 ROOF LEG ☑ HIGH ☐ LOW

	OPEN	CLOSE
AVG INN/ULL IN CRITICAL ZONE	☐ YES ☐ NO	☐ YES ☐ NO
SIDEGAUGE/ATG	23-8-5/8 23-4-7/16	7-5-13/16 6-10
TEMPERATURES °F	# ☑ PROBE ☐ MERCURY	# ☑ PROBE ☐ MERCURY
* ACTION TAKEN :	☑ U 63.6 ☑ M 63.3 ☑ L 63.0	☐ U ☑ M 54.3 ☐ L
	☐ M	☐ M
	☐ OTHER*	☐ OTHER*
SIDETEMP/REMOTE	42 62.4	42 63
PROBE WAS CHECKED PRIOR TO USE	☑ YES ☐ NO ☐ NOT USED	
SAMPLING	☐ U ☐ M ☐ L	☐ U ☐ M ☐ L
* ACTION TAKEN :	☐ T ☐ B ☑ R	☐ T ☐ B ☐ R
	☑ OTHER* X 2	☐ OTHER*
AT ULLAGES :		
CAL DATE : 10/6/2008	Ref TSh Temp : 60	OP TEMP :

INSPECTOR:	J.L.DYKES	J.L.DYKES
WITNESS:		
API @ 60°F/ DENS. @ 15°		
SOURCE		
AMBIENT AIR TEMP		
TEMP OF TANK SHELL	55	48
AVG TEMP (0.5°F)	63.5	54.5
AVG INNAGE	23-4-1/2	7-6-1/8
AVG WATER INNAGE	0-0	0-0
VOLUME UNITS ☑ BBLS ☐ M³ ☐ OTHER:		
TABLE VOLUME **	7482.86	2379.95
FREE WATER	0.00	0.00
OBSERVED VOLUME	7482.86	2379.95
TANK SHELL CORR.	1.00000	1.00000
OBSERVED VOLUME	7482.86	2379.95
ROOF CORRECTION	0.00	0.00
GROSS OBSERVED VOL.	7482.86	2379.95
^VCF TABLE : (t)	1.00000	1.00000
GROSS STANDARD VOL.	7482.86	2379.95
DIFFERENCE	5102.91	
CUSTODY TRANSFER SAMPLE:		
API @ 60°F/ DE		
S & W % VOL.		
S & W VOLUME		
NET STANDARD VOLUME		
WCF TABLE : (t)		
GROSS STANDARD WT.		
NET STANDARD WEIGHT		
WEIGHT UNITS ☐ LT ☐ MT ☐ LBS ☐ OTHER:		
** IS TABLE VOLUME IN ☑ BBLS ☐ M³ ☐ OTHER:		

Copyright SGS-OG&C 2001 - Rev April 2005

Services rendered according to published General Terms and Conditions

CHECKED
DATE 2/4/09

F-10

PORT / TERMINAL: Lake Charles, La / Citgo		OFFICE LAKE CHARLES, LA	TEL (337) 625-1455
VESSEL CCL 7	VOY # N/A	INSPECTOR(S): J.L.DYKES	SGS FILE 129435
CARGO Spent Caustic		CLIENT CES ENV.	REF TBN

SGS

SHORE TANK MEASUREMENTS (STATIC)

☑ AT LOADING ☐ AT TRANSFER ☐ AT DISCHARGE Oil Gas & Chemicals Services Division.

SHORETANK # 182 REF HEIGHT : EXT.FLOATER GAUGE UNITS ☑ FT - IN ☐ FT ☐ MM ☐ OTHER :

OPEN DATE : 2/5/2009 TIME : 9:20 CLOSE DATE : 2/5/2009 TIME : 22:20

OBS. REF. HEIGHT	§ INNAGE	¤WATER INNAGE	OBS. REF. HEIGHT	§ INNAGE	¤WATER INNAGE
20-4-1/8	17-10	0-0	10-1-3/4	7-7-3/4	0-0

§ MEASUREMENTS TAKEN IN ACCORDANCE WITH :

¤ FREE WATER DETERMINED IN ACCORDANCE WITH :

TEMPERATURES TAKEN IN ACCORDANCE WITH : API MPMS 7.6.4

^ VOLUME CALCULATED IN ACCORDANCE WITH :

PROD TEMP	63.7	x 0.875 = 55.7375	PROD TEMP	62.1	x 0.875 = 54.3375
(+) AIR TEMP		x 0.125 =	(+) AIR TEMP		x 0.125 =
TANK SHELLTEMPERATURE:		= 56	TANK SHELL TEMPERATURE		= 54

ROOF CORRECTION INFO - STANDARD API:

CRITICAL ZONE RANGE FROM 6-3 TO 7-8 ROOF LEG ☑ HIGH ☐ LOW

	OPEN	CLOSE
AVG INN/ULL IN CRITICAL ZONE	☐ YES ☐ NO	☐ YES ☐ NO
SIDEGAUGE/ATG	17-2 17-9-7/8	7-7-1/8 / 8-2-13/16
TEMPERATURES °F	# ☑ PROBE ☐ MERCURY	# ☑ PROBE ☐ MERCURY
* ACTION TAKEN :	☑ U 63.6 ☐ M ☑ L 63.7	☐ U ☐ M ☐ L
	☐ M	☑ M 62.1
	☐ OTHER*	☐ OTHER*
SIDETEMP/REMOTE	44 63.8	
PROBE WAS CHECKED PRIOR TO USE	☑ YES ☐ NO ☐ NOT USED	
SAMPLING	☐ U ☐ M ☐ L	☐ U ☐ M ☐ L
* ACTION TAKEN :	☐ T ☐ B ☑ R	☐ T ☐ B ☐ R
	☑ OTHER* X2	☐ OTHER*
AT ULLAGES :		
CAL DATE : 10/6/2008	Ref TSh Temp : 60	OP TEMP :

	OPEN	CLOSE
INSPECTOR:	J.L.DYKES	BELLON
WITNESS:		
API @ 60°F/ DENS. @ 15°		
SOURCE		
AMBIENT AIR TEMP		
TEMP OF TANK SHELL	56	54
AVG TEMP (0.5°F)	63.5	62.0
AVG INNAGE	17-10	8-8-0-0
AVG WATER INNAGE	0-0	0-0
VOLUME UNITS ☑ BBLS ☐ M³ ☐ OTHER :		
TABLE VOLUME **	5708.91	2752.68
FREE WATER	0.00	0.00
OBSERVED VOLUME	5708.91	2752.68
TANK SHELL CORR.	1.00000	1.00000
OBSERVED VOLUME	5708.91	2752.68
ROOF CORRECTION	0.00	0.00
GROSS OBSERVED VOL.	5708.91	2752.68
^VCF TABLE : (t)	1.00000	1.00000
GROSS STANDARD VOL.	5708.91	2752.68
DIFFERENCE	2956.23	
CUSTODY TRANSFER SAMPLE:		
API @ 60°F/ DE		
S & W % VOL.		
S & W VOLUME		
NET STANDARD VOLUME		
WCF TABLE : (t)		
GROSS STANDARD WT.		
NET STANDARD WEIGHT		
WEIGHT UNITS ☐ LT ☐ MT ☐ LBS ☐ OTHER :		
** IS TABLE VOLUME IN ☑ BBLS ☐ M³ ☐ OTHER :		

Copyright SGS-OG&C 2001 - Rev April 2005

Services rendered according to published General Terms and Conditions

CHECKED
DATE 2/6/08

PORT / TERMINAL: Lake Charles, La / Citgo		OFFICE: LAKE CHARLES, LA	TEL: (337) 625-1455
VESSEL: CCL 7	VOY #: N/A	INSPECTOR(S): J.L.DYKES	SGS FILE: 129435
DATE: 2/3/2009 CARGO: Spent Caustic		CLIENT: CES ENV.	REF: TBN

SGS

VESSEL MEASUREMENT SYSTEM

☑ OPEN ☐ CLOSE / RESTRICTED

☐ ARRIVAL ☑ DEPARTURE

Oil Gas & Chemicals Services Division.

☑ AT LOADING ☐ AT TRANSHIPMENT ☐ AT DISCHARGE | ☑ CARGO TANKS ☐ BALLAST TANKS ☐ NON/OTHER CARGO

UNITS : ☑ FT-IN ☐ FT ☐ MM ☐ OTHER : | UNITS : ☑ BBLS ☐ U.S. GALS ☐ M³ ☐ OTHER :

TANK #	REFERENCE HEIGHT	OBSERVED REFERENCE HEIGHT	¤ ULLAGE	WATER INN	TEMPERATURES °F § PROBE	AVG. TEMP	CORRECTED MEASURE	TOTAL OBSERVED VOLUME	FREE WATER	GROSS OBSERVED VOLUME	^ V.C.F. (t)	GROSS STANDARD VOLUME	*
1	15-7		4-6	0-0	62.2	62.2	11-1	2851.64	0.00	2851.64	1.00000	2851.64	C
2	15-7		4-11-3/4	0-0	62.6	62.6	10-7-1/4	2774.10	0.00	2774.10	1.00000	2774.10	C
3	15-7		5-9	0-0	62.6	62.6	9-10	2573.50	0.00	2573.50	1.00000	2573.50	C
							TOTALS	8199.24	0.00	8199.24		8199.24	

PROBE WAS CHECKED PRIOR TO USE ☑ YES ☐ NO ☐ NOT USED

GAUGE LOCATION : ☑ STANDPIPE ☐ G.H. on Expansion Trunk ☐ OTHER :

* GAUGE POSITION: C = Center of tank F = Forward of Center A = Aft of Center

SAMPLES DRAWN : 6X1 QT RUNNING

CORRECTED MEASURE : w = Wedge corrected, t = Trim corrected

API @ 60F / DENSITY @ 15C	SOURCE :
S & W - VOL % :	SOURCE :
S & W - VOL :	WCF TABLE : (t)
NET STANDARD VOLUME	
GROSS STANDARD WEIGHT	
NET STANDARD WEIGHT	
TOTAL CALC. VOL. DEPARTURE	8199.24
REMARKS :	
^ VOLUME CALCULATED IN ACCORDANCE WITH	
¤ LIQUID LEVEL GAUGES IN ACCORDANCE WITH	API MPMS 17.2.5.2
§ TEMPERATURE DETERMINATION IN ACCORDANCE WITH	API MPMS 17.2.5.3

BALLAST TANKS PERMANENT ☐ YES IF ☐ NO (SEE F-15 BALLAST TANKS)

SEASUCTION SEAL #'S :

DRAFT: FWD (P) 9-6 AFT (P) 9-6 LIST : º (P) / (S)

(S) 9-6 (S) 9-6

SEA CONDITION: CALM IN PORT

VESSEL'S STAFF	INSPECTOR
	STEVE BELLON

Copyright SGS-OG&C 2001 - Rev April 2005

Services rendered according to published General Terms and Conditions

CHECKED
DATE 2/6/08

MAY-20-2009 08:36 CES ENVIROMENTAL 7137488664 P.010

EPAPA010000750

F-16

Page 1 of 1

PORT / TERMINAL: Lake Charles, La / Citgo		OFFICE: LAKE CHARLES, LA	TEL: (337) 625-1455
VESSEL: CCL 7	VOY #: N/A	INSPECTOR(S): J.L.DYKES	SGS FILE: 129435
DATE: 2/3/2009 CARGO: Spent Caustic		CLIENT: CES ENV.	REF: TBN

SGS

☑ **OBQ** ☐ **ROB MEASUREMENT**

NOTE: DO NOT USE V.C.F. IF TEMPERATURE IS NOT TAKEN

Oil Gas & Chemicals Services Division.

UNITS: ✓ FT-IN ☐ FT ☐ MM ☐ OTHER: | UNITS: ☐ BBLS ☐ U.S. GALS ☐ M³ ☐ OTHER:

TANK #	REFERENCE HEIGHT	OBSERVED REFERENCE HEIGHT	*	OBSERVED INNAGE	FREE WATER INNAGE	NON-LIQUID INNAGE	AVG. TEMP	CORRECTED MEASURE	TOTAL OBSERVED VOLUME	^ V.C.F. (t)	FREE WATER VOLUME	NON-LIQUID VOLUME	LIQUID VOLUME
1C		15-7-1/2	C	0-0-1/2	0-0	0-0		0-0-1/2	39.86		0.00	0.00	39.86
2C		15-7-3/4	C	0-0	0-0	0-0		0-0	0.00		0.00	0.00	0.00
3C		15-7-1/2	C	0-0	0-0	0-0		0-0	0.00		0.00	0.00	0.00
TOTALS									39.86		0.00	0.00	39.86

^ VOLUME CALCULATED IN ACCORDANCE WITH

On behalf of our client(s) we would like to bring to your attention that in our opinion :

Bbls of LIQUID MATERIAL

Bbls of NON-LIQUID MATERIAL

remains on board your vessel. To the extent we are aware of contractual relationships, this material belongs to our client(s) and should be pumped ashore. In case you are unable to do so please indicate your reasons below. In any event, we have to advise our client(s) of the above and reserve his right to seek compensation for the undelivered amount. Statements with regards to flowability and similiar advisory services express personal opinions without responsibility for SGS.

d = dip, u = Ullage; corrected measure, w = Wedge corrected, t = Trim corrected

GAUGE LOCATION: ☐ STANDPIPE ☐ G.H. on Expansion trunk ☑ OTHER: 6" GAUGE HATCH

* GAUGE POSITION: C = Center of tank F = Forward of Center A = Aft of Center

OBQ SAMPLED ☐ YES ☐ NO IF NO REASON

OBQ TESTED ☐ YES ☐ NO IF NO REASON

ROB SAMPLED ☐ YES ☐ NO IF NO REASON

DRAFT: FWD (P) (S) AFT (P) (S) LIST: ° (P) / (S)

VESSEL'S STAFF | INSPECTOR

SEA CONDITION:

Copyright SGS-OG&C 1997 - Rev April 2005

Services rendered according to published General Terms and Conditions

CHECKED
DATE 2/6/09

SGS

Inspection Report (LOADING)

Subject : CCL 26
Product : SPENT CAUSTIC
Client ref.:

Date : 2/21/2009
Location : Lake Charles, La / Citgo
Client : CES ENVIRONMENTAL SERVICES

Our ref.: 131481

Summary of Figures

		Bbls @ 60°F	Gallons @ 60°F	Long Tons	Metric Tonnes	Pounds
Shore Measurements (Phenolic)						
Total Shore figures delivered	GSV	4,641.20	194,930.40			
Average API Gravity @ 60°F						
Shoretanks no(s):	ST 185, ST 185					
Shore Measurements (Sulfidic)						
Total Shore figures delivered	GSV	2,536.49	106,532.58			
Average API Gravity @ 60°F						
Shoretanks no(s):	ST 185, ST 185					
Vessel's Measurements (Phenolic)						
Vessel's figures before loading (OBQ)	Free Water	0.00				
Vessel's figures before loading (OBQ)	Liquid	0.00				
Vessel's figures before loading (OBQ)	Non Liquid	0.00				
Vessel's figures before loading (OBQ)	Total	0.00	0.00			
Vessel's figures TCV on board after loading		4,655.31	195,523.02			
Vessel's figures TCV loaded		4,655.31	195,523.02			
Vessel's figures Free Water loaded		0.00	0.00			
Vessel's figures GSV loaded		4,655.31	195,523.02			

Cargo stowage Cargo tanks no(s): CCL 26[1C, 2C], CCL 26[3C]

Vessel's Measurements (Sulfidic)			
Vessel's figures before loading (OBQ)	Free Water	0.00	
Vessel's figures before loading (OBQ)	Liquid	0.00	
Vessel's figures before loading (OBQ)	Non Liquid	0.00	
Vessel's figures before loading (OBQ)	Total	0.00	0.00
Vessel's figures TCV on board after loading		2,569.11	107,902.62
Vessel's figures TCV loaded		2,569.11	107,902.62
Vessel's figures Free Water loaded		0.00	0.00
Vessel's figures GSV loaded		2,569.11	107,902.62

Cargo stowage Cargo tanks no(s): CCL 26[1C, 2C], CCL 26[3C]

Samples – Shore Tank 2x1 quarts running
Barges – 1x1 quart running

Quality – None Requested

SGS

Time Log

2/20/2009	2030	VESSEL ARRIVED
	2045	VESSEL DOCKED
	2055	INSPECTOR NOTIFIED
	2145	INSPECTOR ARRIVED
	2230	OPEN ST 182
	2240	OPENED ST 185
	2250	COMMENCED PRE LOAD DECK INSPECTION
	2300	COMPLETED PRE LOAD DECK INSPECTION
	2345	CARGO HOSE CONNECTED
2/21/2009	0045	COMMENCED LOADING FROM ST 185
	1330	COMPLETED LOADING FROM ST 185
	1345	COMMENCED LOADING FROM ST 182
	1930	COMPLETED LOADING
	1930	INSPECTOR NOTIFIED
	1945	CARGO HOSE DISCONNECTED
	2000	INSPECTOR ARRIVED
	2010	CLOSED ST 182
	2020	CLOSED ST 185
	2030	COMENCED POST LOAD DECK INSPECTION
	2100	COMPLETED POST LOAD DECK INSPECTION
	2105	COMMENCED CALCULATIONS
	2115	DOCUMENTS PLACED ON VESSEL
	2120	INSPECTOR DEPARTED

Steve Cross
for SGS Oil, Gas & Chemicals Services
2/23/2009

Shore volume calculated in accordance with:
Vessel volume calculated in accordance with:
Procedures as per applicable MPMS Chapter 3.1a, 7, 8.1 or 8.2, 12.1 or 12.2, 17.1, 17.2, 17.4.

Disclaimer

This document is issued by the Company under its General Conditions of Service accessible at http://www.sgs.com/terms_and_conditions.htm. The Client's attention is drawn to the limitation of liability, indemnification and jurisdiction issues defined therein.

Any other holder of this document is advised that information contained hereon reflects the Company's findings at the time of its intervention only and within the limits of Client's instructions, if any. The Company's sole responsibility is to its Client and this document does not exonerate parties to a transaction from exercising all their rights and obligations under the transaction documents. Any unauthorized alteration, forgery or falsification of the content or appearance of this document is unlawful and offenders may be prosecuted to the fullest extent of the law.
FIRCC REV. January 2007

F-4 Page of

PORT / TERMINAL: Lake Charles, La / Citgo	OFFICE: LAKE CHARLES, LA TEL: (337) 625-1455
VESSEL: CCL 26 VOY #:	INSPECTOR(S): JOE BUSBY
DATE: 2/20/2009	SGS FILE: 131481
CARGO: Spent Caustic (Phenolic and Sulfidic)	CLIENT: CITGO REF:

SGS

TIME LOG

Oil Gas & Chemicals Services Division.

☑ AT LOADING ☐ AT TRANSFER ☐ AT DISCHARGE

YEAR 2009 / MONTH JAN FEB MAR APR MAY JUN JUL AUG SEP OCT NOV DEC

Date	Hour	
2/20	20:30	VESSEL ARRIVED
2/20	20:45	VESSEL DOCKED
2/20	20:55	INSPECTOR NOTIFIED
2/20	21:45	INSPECTOR ARRIVED
2/20	22:30	OPEN ST 182
2/20	22:40	OPENED ST 185
2/20	22:50	COMMENCED PRE LOAD DECK INSPECTION
2/20	23:00	COMPLETED PRE LOAD DECK INSPECTION
2/20	23:45	CARGO HOSE CONNECTED
2/21	00:45	COMMENCED LOADING FROM ST 185
2/21	13:30	COMPLETED LOADING FROM ST 185
2/21	13:45	COMMENCED LOADING FROM ST 182
2/21	19:30	COMPLETED LOADING
2/21	19:30	INSPECTOR NOTIFIED
2/21	19:45	CARGO HOSE DISCONNECTED
2/21	20:00	INSPECTOR ARRIVED
2/21	20:10	CLOSED ST 182
2/21	20:20	CLOSED ST 185
2/21	20:30	COMENCED POST LOAD DECK INSPECTION
2/21	21:00	COMPLETED POST LOAD DECK INSPECTION
2/21	21:05	COMMENCED CALCULATIONS
2/21	21:15	DOCUMENTS PLACED ON VESSEL
2/21	21:20	INSPECTOR DEPARTED

DELAYS AND STOPPAGES :

TIMES MARKED * ARE SUBMITTED TO US. TIME LOG PAGE 1 OF 1

Copyright SGS-OG&C June 1997 - Rev Oct 2003 Services rendered according to published General Terms and Conditions

2/23/09

F-3A

PORT / TERMINAL: Lake Charles, La / Citgo	OFFICE: LAKE CHARLES, LA TEL: (337) 625-1455
VESSEL: CCL 26 VOY #:	INSPECTOR(S): JOE BUSBY
DATE: 2/20/2009	SGS FILE: 131481
CARGO: PHENOLIC CAUSTIC	CLIENT: CITGO REF:

SGS

VOYAGE ANALYSIS REPORT

Oil Gas & Chemicals Services Division.

☑ LOADING ☐ V-V TRANSFER ☐ DISCHARGE ☐ SUMMARY

Type of Voyage	C/P DATE
Simple	

Load Port/Terminal/Berth	ARRIVED	SAILED	Discharge Port/Terminal/Berth	ARRIVED	SAILED
LAKE CHARLES/CITGO	2/20/2009	2/22/2009			

VOLUME UNITS	SUPPLIER	RECEIVER	VCF SHORE LOAD	VCF SHORE DISCH	VCF VESSEL LOAD	VCF VESSEL DISCH
☑ BBLS ☐ GALS ☐ M³ ☐ L	CITGO					

DESCRIPTION		API/DENSITY	TCV	FW	GSV	S&W	NSV	Reference
I. COMPARISON OF SHORE QUANTITIES IN CUSTODY TRANSFER								
Bill of Lading	1.		4641.20					(1)
Outturn	2.		0.00					(2)
Diff.	3.		-4641.20					(3)=(2) - (1)
Diff. %	4.		-100.00%					(4) = (3) / (1) x 100
Recalc. B/L	5.	(a)		Recalculate if B/L and O/T use different tables.				(5) (a) Vol. Diff.

II. VESSEL/SHORE QUANTITIES AT ( ) LOAD PORT(S)						LIQUID	NON-LIQUID	
Vessel	Sailing	A.	4655.31					(A)
	OBQ (All)	B.	0.00					(B)
	Loaded	C.	4655.31					(C)=(A) - (B)
	Difference	D.	14.11					(D)=(C)-[(1) or (5)]
	Difference %	E.	0.30%					(E)=(D)/[(1)or(5)]x100
Load Vessel Ratio		F.	1.0030					(F)=(C)/[(1)or(5)]
Load VEF		G.						(G)
Theoretical Shore		H.						(H)=(C) / (G)
Theoretical Shore Diff.		I.	-4641.20					(I)=(H) - [(1) or (5)]
Theoretical Shore Diff. %		J.	-100.00%					(J)=(I)/[(1) or (5)]x100

II. VESSEL/SHORE QUANTITIES AT ( ) DISCHARGE PORT(S)						LIQUID	NON-LIQUID	
Vessel	Arrival	K.						(K)
	ROB (All)	L.						(L)
	Discharged	M.						(M) = (K) - (L)
	Difference	N.						(N) = (2) - (M)
	Difference %	O.						(O) = (N) / (2) x 100
Discharge Vessel Ratio		P.						(P) = (M) / (2)
Discharge VEF		Q.						(Q)
Theoretical Shore		R.						(R) = (M) / (Q)
Theoretical Shore Diff.		S.	0.00					(S) = (2) - (R)
Theoretical Shore Diff. %		T.	0.00					(T) = (S) / (2) x 100

III. VESSEL'S COMPARISON OF LOADING AND DISCHARGE PORT(S) VCF TABLE MUST BE CONSISTENT								
Transit	Difference	U.						(U) = (K) - (A)
	Difference %	V.				LIQUID	NON-LIQUID	(V) = (U) / (A) x 100
OBQ/ROB	Difference	W.						(W) = (L) - (B)

ADJ TCV DIFF : TCV Difference (3) - OBQ (B) + ROB (L) (Quantity) / 0.00	S&W at Load Port : [S&W(1)/GSV(1)]X100	S&W at Disch Port : [S&W(2)/GSV(2)]X100

Comments :

Prepared by : JOE BUSBY	Title : INSPECTOR	Company : SGS	Date Completed : 2/21/2009

2/23/09

Copyright SGS-OG&C June 1997 - Rev Oct 2003 Services rendered according to published General Terms and Conditions

F-3A

PORT / TERMINAL: Lake Charles, La / Citgo		OFFICE: LAKE CHARLES, LA	TEL: (337) 625-1455
VESSEL: CCL 26	VOY #:	INSPECTOR(S): JOE BUSBY	
DATE: 2/20/2009		SGS FILE: 131481	
CARGO: SULFIDIC CAUSTIC		CLIENT: CITGO	REF:

SGS

VOYAGE ANALYSIS REPORT

Oil Gas & Chemicals Services Division.

☑ LOADING	☐ V-V TRANSFER	☐ DISCHARGE	☐ SUMMARY	Type of Voyage	C/P DATE
				Simple	

Load Port/Terminal/Berth	ARRIVED	SAILED	Discharge Port/Terminal/Berth	ARRIVED	SAILED
LAKE CHARLES/CITGO	2/20/2009	2/22/2009			

VOLUME UNITS	SUPPLIER	RECEIVER	VCF SHORE LOAD	VCF SHORE DISCH	VCF VESSEL LOAD	VCF VESSEL DISCH
☐ BBLS ☐ GALS ☐ M³ ☐ L	CITGO					

DESCRIPTION		API/DENSITY	TCV	FW	GSV	S&W	NSV	Reference
I. COMPARISON OF SHORE QUANTITIES IN CUSTODY TRANSFER								
Bill of Lading	1.		2536.49					(1)
Outturn	2.							(2)
Diff.	3.							(3)=(2) - (1)
Diff. %	4.							(4) = (3) / (1) x 100
Recalc. B/L	5.	(a)		Recalculate if B/L and O/T use different tables.				(5) (a) Vol. Diff.

II. VESSEL/SHORE QUANTITIES AT ( ) LOAD PORT(S)						LIQUID	NON-LIQUID	
Vessel	Sailing	A.	2569.11					(A)
	OBQ (All)	B.	0.00					(B)
	Loaded	C.	2569.11					(C)=(A) - (B)
	Difference	D.	32.62					(D)=(C)-[(1) or (5)]
	Difference %	E.	1.29%					(E)=(D)/[(1)or(5)]x100
Load Vessel Ratio		F.	1.0129					(F)=(C)/[(1)or(5)]
Load VEF		G.						(G)
Theoretical Shore		H.						(H)=(C) / (G)
Theoretical Shore Diff.		I.	-2536.49					(I)=(H) - [(1) or (5)]
Theoretical Shore Diff. %		J.	-100.00%					(J)=(I)/[(1) or (5)]x100

II. VESSEL/SHORE QUANTITIES AT ( ) DISCHARGE PORT(S)						LIQUID	NON-LIQUID	
Vessel	Arrival	K.						(K)
	ROB (All)	L.						(L)
	Discharged	M.						(M) = (K) - (L)
	Difference	N.						(N) = (2) - (M)
	Difference %	O.						(O) = (N) / (2) x 100
Discharge Vessel Ratio		P.						(P) = (M) / (2)
Discharge VEF		Q.						(Q)
Theoretical Shore		R.						(R) = (M) / (Q)
Theoretical Shore Diff.		S.						(S) = (2) - (R)
Theoretical Shore Diff. %		T.						(T) = (S) / (2) x 100

III. VESSEL/'S COMPARISON OF LOADING AND DISCHARGE PORT(S) VCF TABLE MUST BE CONSISTENT								
Transit	Difference	U.						(U) = (K) - (A)
	Difference %	V.				LIQUID	NON-LIQUID	(V) = (U) / (A) x 100
OBQ/ROB	Difference	W.						(W) = (L) - (B)

ADJ TCV DIFF :	TCV Difference (3) - OBQ (B) + ROB (L) (Quantity) / 0.00	S&W at Load Port : [S&W(1)/GSV(1)]X100	S&W at Disch Port : [S&W(2)/GSV(2)]X100

Comments :

Prepared by : JOE BUSBY	Title : INSPECTOR	Company : SGS	Date Completed : 2/21/2009

Copyright SGS-OG&C June 1997 - Rev Oct 2003 Services rendered according to published General Terms and Conditions

2/23/09

F-1 Page 1 of 2

PORT / TERMINAL: Lake Charles, La / Citgo	OFFICE LAKE CHARLES, LA TEL (337) 625-1455
VESSEL CCL 26 VOY #	INSPECTOR(S): JOE BUSBY
DATE 2/20/2009	SGS FILE 131481
CARGO PHENOLIC CAUSTIC	CLIENT CITGO REF

SGS

SHORE QUANTITY SUMMARY

Oil Gas & Chemicals Services Division.

☑ AT LOADING ☐ AT TRANSFER ☐ AT DISCHARGE ☑ SHORE TANK (STATIC) ☐ METER (DYNAMIC)

CUSTODY TRANSFER SAMPLE

☐ API @ 60ºF : ☐ R.D. 60ºF/60ºF ☐ Density Lbs/Gal @

S&W % VOL:

SOURCE OF ANALYTICAL DATA:

	UNITS	ST 185	TANK/METER	TANK/METER	TANK/METER	TANK/METER
TOTAL CALCULATED VOLUME	BBLS	4641.20				
FREE WATER	BBLS	0.00				
GROSS STANDARD VOLUME	BBLS	4641.20				
S & W VOLUME	BBLS					
(NET) STANDARD VOLUME	BBLS					
WCF TABLE (1)						
GROSS STANDARD WEIGHT						
S & W WEIGHT						
(NET) STANDARD WEIGHT						

	UNITS	TANK/METER	TANK/METER	SHORELINE	TOTAL DELIVERED
TOTAL CALCULATED VOLUME	BBLS				4641.20
FREE WATER	BBLS				0.00
GROSS STANDARD VOLUME	BBLS				4641.20
S & W VOLUME	BBLS				
(NET) STANDARD VOLUME	BBLS				
					☑ GSV ☐ NSV ☐ SV @
GROSS STANDARD WEIGHT					
S & W WEIGHT					
(NET) STANDARD WEIGHT					

STOWAGE O/B VESSEL:

B/L DATE:

REMARKS QUANTITY CONFIRMED

with _____ of _____

with _____ of _____

Date _____ Time _____

QUANTITY CHANGES ☐ YES ☐ NO IF YES STATE REASON

2/23/09

Copyright SGS-OG&C June 1997 - Rev Oct 2003 Services rendered according to published General Terms and Conditions

F-1 Page 2 of 2

PORT / TERMINAL: Lake Charles, La / Citgo	OFFICE LAKE CHARLES, LA TEL (337) 625-1455
VESSEL CCL 26 VOY #	INSPECTOR(S): JOE BUSBY
DATE 2/20/2009	SGS FILE 131481
CARGO SULFIDIC CAUSTIC	CLIENT CITGO REF

SGS

SHORE QUANTITY SUMMARY

Oil Gas & Chemicals Services Division.

☑ AT LOADING ☐ AT TRANSFER ☐ AT DISCHARGE ☑ SHORE TANK (STATIC) ☐ METER (DYNAMIC)

CUSTODY TRANSFER SAMPLE

☐ API @ 60°F : ☐ R.D. 60°F/60°F ☐ Density Lbs/Gal @

S&W % VOL:

SOURCE OF ANALYTICAL DATA:

	UNITS	ST 185	TANK/METER	TANK/METER	TANK/METER	TANK/METER
TOTAL CALCULATED VOLUME	BBLS	2536.49				
FREE WATER	BBLS	0.00				
GROSS STANDARD VOLUME	BBLS	2536.49				
S & W VOLUME	BBLS					
(NET) STANDARD VOLUME	BBLS					
WCF TABLE (1)						
GROSS STANDARD WEIGHT						
S & W WEIGHT						
(NET) STANDARD WEIGHT						

	UNITS	TANK/METER	TANK/METER	SHORELINE	TOTAL DELIVERED
TOTAL CALCULATED VOLUME	BBLS				2536.49
FREE WATER	BBLS				0.00
GROSS STANDARD VOLUME	BBLS				2536.49
S & W VOLUME	BBLS				
(NET) STANDARD VOLUME	BBLS				
					☑ GSV ☐ NSV ☐ SV @
GROSS STANDARD WEIGHT					
S & W WEIGHT					
(NET) STANDARD WEIGHT					

STOWAGE O/B VESSEL:

B/L DATE:

REMARKS QUANTITY CONFIRMED

with _____ of _____

with _____ of _____

Date _____ Time _____

QUANTITY CHANGES ☐ YES ☐ NO IF YES STATE REASON

2/23/09

Copyright SGS-OG&C June 1997 - Rev Oct 2003 Services rendered according to published General Terms and Conditions

F-2 Page 1 of 2

PORT / TERMINAL: Lake Charles, La / Citgo	OFFICE: LAKE CHARLES, LA TEL: (337) 625-1455
VESSEL: CCL 26 VOY #:	INSPECTOR(S): JOE BUSBY
DATE: 2/20/2009	SGS FILE: 131481
CARGO: PHENOLIC CAUSTIC	CLIENT: CITGO REF:

SGS

VESSEL QUANTITY SUMMARY

Oil Gas & Chemicals Services Division.

☑ AT LOADING ☐ AT TRANSFER ☐ AT DISCHARGE ☐ CRUDE OIL ☑ PRODUCTS

☐ API @ 60°F : ☐ R.D. 60°F/60°F ☐ Density Lbs/Gal @

S&W % VOL:

SOURCE OF ANALYTICAL DATA:

	VOLUME		WCF (t)	WEIGHT		
	BBLS	U.S. GALS		POUNDS	LONG TONS	METRIC TONS AIR/VAC
VESSEL'S QUANTITIES	V.E.F. CORRECTED : ☐ YES ☐ NO VEF:					
TOTAL CALCULATED VOL	4655.31	195523.02				
FREE WATER	0.00	0.00				
GROSS STANDARD VOLUME	4655.31	195523.02				
S & W VOLUME						
(NET) STANDARD VOLUME						

☑ OBQ ☐ ROB

LIQUID MATERIAL	0.00	0.00				
NON-LIQUID MATERIAL	0.00	0.00				
FREE WATER	0.00	0.00				
TOTAL	0.00	0.00				

☐ LOADED QUANTITIES ☐ DISCHARGED QUANTITIES

TOTAL CALCULATED VOL	4655.31	195523.02				
FREE WATER	0.00	0.00				
GROSS STANDARD VOLUME	4655.31	195523.02				
S & W VOLUME						
(NET) STANDARD VOLUME						

ARE SLOPS INCLUDED IN CALCULATIONS ☐ YES ☐ NO ☐ NO SLOPS ON BOARD

STOWAGE O/B VESSEL:

REMARKS:

2/23/09 SX

Copyright SGS-OG&C 1995 - Rev Oct 2003 Services rendered according to published General Terms and Conditions

F-2 Page 2 of 2

PORT / TERMINAL: Lake Charles, La / Citgo	OFFICE: LAKE CHARLES, LA TEL: (337) 625-1455
VESSEL: CCL 26 VOY #:	INSPECTOR(S): JOE BUSBY
DATE: 2/20/2009	SGS FILE: 131481
CARGO: SULFIDIC CAUSTIC	CLIENT: CITGO REF:

SGS

VESSEL QUANTITY SUMMARY

Oil Gas & Chemicals Services Division.

☑ AT LOADING ☐ AT TRANSFER ☐ AT DISCHARGE ☐ CRUDE OIL ☑ PRODUCTS

☐ API @ 60°F : ☐ R.D. 60°F/60°F ☐ Density Lbs/Gal @

S&W % VOL:

SOURCE OF ANALYTICAL DATA:

	VOLUME		WCF	WEIGHT		
	BBLS	U.S. GALS	(t)	POUNDS	LONG TONS	METRIC TONS AIR/VAC
VESSEL'S QUANTITIES	V.E.F. CORRECTED : ☐ YES ☐ NO VEF:					
TOTAL CALCULATED VOL	2569.11	107902.62				
FREE WATER	0.00	0.00				
GROSS STANDARD VOLUME	2569.11	107902.62				
S & W VOLUME						
(NET) STANDARD VOLUME						

☑ OBQ ☐ ROB

LIQUID MATERIAL	0.00	0.00				
NON-LIQUID MATERIAL	0.00	0.00				
FREE WATER	0.00	0.00				
TOTAL	0.00	0.00				

☐ LOADED QUANTITIES ☐ DISCHARGED QUANTITIES

TOTAL CALCULATED VOL	2569.11	107902.62				
FREE WATER	0.00	0.00				
GROSS STANDARD VOLUME	2569.11	107902.62				
S & W VOLUME						
(NET) STANDARD VOLUME						

ARE SLOPS INCLUDED IN CALCULATIONS ☐ YES ☐ NO ☐ NO SLOPS ON BOARD

STOWAGE O/B VESSEL:

REMARKS:

2/23/09

Copyright SGS-OG&C 1995 - Rev Oct 2003 Services rendered according to published General Terms and Conditions

PORT / TERMINAL: Lake Charles, La / Citgo		OFFICE LAKE CHARLES, LA	TEL (337) 625-1455
VESSEL CCL 26	VOY #	INSPECTOR(S): JOE BUSBY	SGS FILE 131481
CARGO SULFIDIC CAUSTIC		CLIENT CITGO	REF

SGS

SHORE TANK MEASUREMENTS (STATIC)

☑ AT LOADING ☐ AT TRANSFER ☐ AT DISCHARGE Oil Gas & Chemicals Services Division.

SHORETANK # 182 REF HEIGHT : GAUGE UNITS ☑ FT - IN ☐ FT ☐ MM ☐ OTHER :

OPEN DATE : 2/20/2009 TIME : 22:20 CLOSE DATE : 2/21/2009 TIME : 20:20

OBS. REF. HEIGHT	§ INNAGE	¤ WATER INNAGE	OBS. REF. HEIGHT	§ INNAGE	¤ WATER INNAGE
20-0-3/4	18-9-1/4	0-0-0	12-1-7/8	10-10-7/8	0-0-0

§ MEASUREMENTS TAKEN IN ACCORDANCE WITH : INNAGE: API MPMS 3.1A.9.2

¤ FREE WATER DETERMINED IN ACCORDANCE WITH : API MPMS 3.1A.10.1

TEMPERATURES TAKEN IN ACCORDANCE WITH : API MPMS 7.6.4

^ VOLUME CALCULATED IN ACCORDANCE WITH :

PROD TEMP	68.2	x 0.875 = 59.6750	PROD TEMP	68.8	x 0.875 = 60.2000
(+) AIR TEMP	45.0	x 0.125 = 5.6250	(+) AIR TEMP	50.0	x 0.125 = 6.2500
TANK SHELLTEMPERATURE:		= 65	TANK SHELL TEMPERATURE		= 66

ROOF CORRECTION INFO - STANDARD API:

CRITICAL ZONE RANGE FROM TO ROOF LEG ☐ HIGH ☐ LOW

	OPEN	CLOSE
AVG INN/ULL IN CRITICAL ZONE	☐ YES ☑ NO	☐ YES ☑ NO
SIDEGAUGE/ATG	18-1-1/4 18-9	10-2-12 10-10-10
TEMPERATURES °F	# ☑ PROBE ☐ MERCURY	# ☑ PROBE ☐ MERCURY
* ACTION TAKEN :	☐ U ☑ M 68.2 ☐ L	☐ U ☑ M 68.8 ☐ L
	☐ M	☐ M
	☐ OTHER*	☐ OTHER*
SIDETEMP/REMOTE		
PROBE WAS CHECKED PRIOR TO USE	☑ YES ☐ NO ☐ NOT USED	
SAMPLING	☐ U ☐ M ☐ L	☐ U ☐ M ☐ L
* ACTION TAKEN :	☐ T ☐ B ☑ R	☐ T ☐ B ☐ R
	☐ OTHER*	☐ OTHER*
AT ULLAGES :		
CAL DATE :	Ref TSh Temp : 60	OP TEMP :

	OPEN	CLOSE
INSPECTOR:	JOE BUSBY	JOE BUSBY
WITNESS:		
API @ 60°F		
SOURCE		
AMBIENT AIR TEMP	45.0	50.0
TEMP OF TANK SHELL	65	66
AVG TEMP (0.5°F)	68.0	69.0
AVG INNAGE	18-9-1/4	10-10-7/8
AVG WATER INNAGE	0-0-0	0-0-0
VOLUME UNITS ☐ BBLS ☐ M³ ☐ OTHER :		
TABLE VOLUME **	6011.29	3474.92
FREE WATER	0.00	0.00
OBSERVED VOLUME	6011.29	3474.92
TANK SHELL CORR.	1.00000	1.00000
OBSERVED VOLUME	6011.29	3474.92
ROOF CORRECTION	0.00	0.00
GROSS OBSERVED VOL.	6011.29	3474.92
^VCF TABLE : (t)	1.00000	1.00000
GROSS STANDARD VOL.	6011.29	3474.92
DIFFERENCE	2536.37	
CUSTODY TRANSFER SAMPLE:		
API @ 60°F/ DE		
S & W % VOL.		
S & W VOLUME		
NET STANDARD VOLUME		
WCF TABLE : (t)		
GROSS STANDARD WT.		
NET STANDARD WEIGHT		
WEIGHT UNITS ☐ LT ☐ MT ☐ LBS ☐ OTHER :		
** IS TABLE VOLUME IN ☐ BBLS ☐ M³ ☐ OTHER :		

Copyright SGS-OG&C 2001 - Rev April 2005

Services rendered according to published General Terms and Conditions

2/23/09

MAY-20-2009 08:54 CES ENVIROMENTAL 7137488664 P.077

EPAPA010000761

F-10

Page [illegible] of [illegible]

PORT / TERMINAL: Lake Charles, La	/ Citgo	OFFICE LAKE CHARLES, LA	TEL (337) 625-1455
VESSEL CCL 26	VOY #	INSPECTOR(S): JOE BUSBY	SGS FILE 131481
CARGO PHENOLIC CAUSTIC		CLIENT CITGO	REF

SGS

SHORE TANK MEASUREMENTS (STATIC)

☑ AT LOADING ☐ AT TRANSFER ☐ AT DISCHARGE Oil Gas & Chemicals Services Division.

SHORETANK # 185 REF HEIGHT : GAUGE UNITS ☑ FT - IN ☐ FT ☐ MM ☐ OTHER :

OPEN DATE : 2/20/2009 TIME : 22:30 CLOSE DATE : 2/21/2009 TIME : 20:30

OBS. REF. HEIGHT	§ INNAGE	¤ WATER INNAGE	OBS. REF. HEIGHT	§ INNAGE	¤ WATER INNAGE
36-8-1/2	22-0-1/2	0-0-0	36-8-1/2	7-7-1/2	0-0-0

§ MEASUREMENTS TAKEN IN ACCORDANCE WITH : INNAGE: API MPMS 3.1A.9.2

¤ FREE WATER DETERMINED IN ACCORDANCE WITH : API MPMS 3.1A.10.1

TEMPERATURES TAKEN IN ACCORDANCE WITH : API MPMS 17.2.5.3

^ VOLUME CALCULATED IN ACCORDANCE WITH :

PROD TEMP	x 0.875 =		PROD TEMP	x 0.875 =	
(+) AIR TEMP	45.0 x 0.125 =	5.6250	(+) AIR TEMP	50.0 x 0.125 =	6.2500
TANK SHELLTEMPERATURE:	=	6	TANK SHELL TEMPERATURE	=	6

ROOF CORRECTION INFO - STANDARD API:

CRITICAL ZONE RANGE FROM TO ROOF LEG ☐ HIGH ☐ LOW

	OPEN	CLOSE
AVG INN/ULL IN CRITICAL ZONE	☐ YES ☑ NO	☐ YES ☑ NO
SIDEGAUGE/ATG	22-0-1/2 22-0-1/2	7-7-1/2 7-7-1/2
TEMPERATURES °F	# ☐ PROBE ☐ MERCURY	# ☐ PROBE ☐ MERCURY
* ACTION TAKEN :	☐ U ☐ M ☐ L	☐ U ☐ M ☐ L
	☐ M	☐ M
	☐ OTHER*	☐ OTHER*
SIDETEMP/REMOTE		
PROBE WAS CHECKED PRIOR TO USE	☐ YES ☐ NO ☐ NOT USED	
SAMPLING	☐ U ☐ M ☐ L	☐ U ☐ M ☐ L
* ACTION TAKEN :	☐ T ☐ B ☐ R	☐ T ☐ B ☐ R
	☐ OTHER*	☐ OTHER*
AT ULLAGES :		
CAL DATE :	Ref TSh Temp : 60	OP TEMP :

	OPEN	CLOSE
INSPECTOR:	JOE BUSBY	JOE BUSBY
WITNESS:		
API @ 60°F		
SOURCE		
AMBIENT AIR TEMP	45.0	50.0
TEMP OF TANK SHELL	6	6
AVG TEMP (0.5°F)		
AVG INNAGE	22-0-1/2	7-7-1/2
AVG WATER INNAGE	0-0-0	0-0-0
VOLUME UNITS ☐ BBLS ☐ M³ ☐ OTHER :		
TABLE VOLUME **	7076.89	2435.69
FREE WATER	0.00	0.00
OBSERVED VOLUME	7076.89	2435.69
TANK SHELL CORR.	1.00000	1.00000
OBSERVED VOLUME	7076.89	2435.69
ROOF CORRECTION	0.00	0.00
GROSS OBSERVED VOL.	7076.89	2435.69
^VCF TABLE : (t)	1.00000	1.00000
GROSS STANDARD VOL.	7076.89	2435.69
DIFFERENCE	4641.20	
CUSTODY TRANSFER SAMPLE:		
API @ 60°F/ DE		
S & W % VOL.		
S & W VOLUME		
NET STANDARD VOLUME		
WCF TABLE : (t)		
GROSS STANDARD WT.		
NET STANDARD WEIGHT		
WEIGHT UNITS ☐ LT ☐ MT ☐ LBS ☐ OTHER :		
** IS TABLE VOLUME IN ☐ BBLS ☐ M³ ☐ OTHER :		

Copyright SGS-OG&C 2001 - Rev April 2005

Services rendered according to published General Terms and Conditions

2/23/09

F-15

Page [illegible] of [illegible]

PORT / TERMINAL: Lake Charles, La / Citgo		OFFICE: LAKE CHARLES, LA	TEL: (337) 625-1455
VESSEL: CCL 26	VOY #:	INSPECTOR(S): JOE BUSBY	SGS FILE: 131481
DATE: 2/20/2009 CARGO: PHENOLIC CAUSTIC		CLIENT: CITGO	REF:

SGS

VESSEL MEASUREMENT SYSTEM

☑ OPEN ☐ CLOSE / RESTRICTED

☐ ARRIVAL ☑ DEPARTURE

Oil Gas & Chemicals Services Division.

☑ AT LOADING ☐ AT TRANSHIPMENT ☐ AT DISCHARGE

☑ CARGO TANKS ☐ BALLAST TANKS ☐ NON/OTHER CARGO

UNITS : ☑ FT-IN ☐ FT ☐ MM ☐ OTHER :

UNITS : ☑ BBLS ☐ U.S. GALS ☐ M³ ☐ OTHER :

TANK #	REFERENCE HEIGHT	OBSERVED REFERENCE HEIGHT	¤ INNAGE	WATER INN	TEMPERATURES °F § PROBE	AVG. TEMP	CORRECTED MEASURE	TOTAL OBSERVED VOLUME	FREE WATER	GROSS OBSERVED VOLUME	^ V.C.F. (t)	GROSS STANDARD VOLUME	*
1C	16-2-1/2	16-2-1/2	9-2-7/8	0-0-0	61.2	61.2	9-2-7/8	2240.68	0.00	2240.68	1.00000	2240.68	A
2C	16-2-1/2	16-2-1/2	8-9-1/8	0-0-0	61.7	61.7	8-9-1/8	2414.63	0.00	2414.63	1.00000	2414.63	A
							TOTALS	4655.31	0.00	4655.31		4655.31	

PROBE WAS CHECKED PRIOR TO USE ☑ YES ☐ NO ☐ NOT USED

GAUGE LOCATION : ☑ STANDPIPE ☐ G.H. on Expansion Trunk ☐ OTHER :

* GAUGE POSITION: C = Center of tank F = Forward of Center A = Aft of Center

SAMPLES DRAWN : 1 QT RUNNING PER TANK

CORRECTED MEASURE : w = Wedge corrected, t = Trim corrected

API @ 60F / DENSITY @ 15C SOURCE :

S & W - VOL % : SOURCE :

S & W - VOL : WCF TABLE : (t)

NET STANDARD VOLUME	
GROSS STANDARD WEIGHT	
NET STANDARD WEIGHT	
TOTAL CALC. VOL. ARRIVAL / DEPARTURE	4655.31

BALLAST TANKS PERMANENT ☐ YES IF ☐ NO (SEE F-15 BALLAST TANKS)

SEASUCTION SEAL #'S :

DRAFT: FWD (P) 8-1 AFT (P) 9-6 LIST : ° (P) / (S)

(S) 8-1 (S) 9-6

SEA CONDITION: calm in port

REMARKS :

^ VOLUME CALCULATED IN ACCORDANCE WITH

¤ LIQUID LEVEL GAUGES IN ACCORDANCE WITH API MPMS 17.2.5.2

§ TEMPERATURE DETERMINATION IN ACCORDANCE WITH API MPMS 17.2.5.3

VESSEL'S STAFF	INSPECTOR
	JOE BUSBY

Copyright SGS-OG&C 2001 - Rev April 2005

Services rendered according to published General Terms and Conditions

2/23/09

PORT / TERMINAL: Lake Charles, La / Citgo	OFFICE: LAKE CHARLES, LA TEL: (337) 625-1455
VESSEL: CCL 26 VOY #:	INSPECTOR(S): JOE BUSBY SGS FILE: 131481
DATE: 2/20/2009 CARGO: SULFIDIC CAUSTIC	CLIENT: CITGO REF:

SGS

VESSEL MEASUREMENT SYSTEM

☐ OPEN ☐ CLOSE / RESTRICTED

☐ ARRIVAL ☐ DEPARTURE

Oil Gas & Chemicals Services Division.

☑ AT LOADING ☐ AT TRANSHIPMENT ☐ AT DISCHARGE | ☐ CARGO TANKS ☐ BALLAST TANKS ☐ NON/OTHER CARGO

UNITS : ☑ FT-IN ☐ FT ☐ MM ☐ OTHER : | UNITS : ☑ BBLS ☐ U.S. GALS ☐ M³ ☐ OTHER :

TANK #	REFERENCE HEIGHT	OBSERVED REFERENCE HEIGHT	¤ INNAGE	WATER INN	TEMPERATURES °F § PROBE	AVG. TEMP	CORRECTED MEASURE	TOTAL OBSERVED VOLUME	FREE WATER	GROSS OBSERVED VOLUME	^ V.C.F. (t)	GROSS STANDARD VOLUME	*
3C	16-2-3/4	16-2-3/4	10-5-0	0	61.0	61.0	10-5	2569.11	0.00	2569.11	1.00000	2569.11	
							TOTALS	2569.11	0.00	2569.11		2569.11	

PROBE WAS CHECKED PRIOR TO USE ☐ YES ☐ NO ☐ NOT USED

GAUGE LOCATION : ☐ STANDPIPE ☐ G.H. on Expansion Trunk

☐ OTHER :

* GAUGE POSITION: C = Center of tank F = Forward of Center A = Aft of Center

SAMPLES DRAWN :

BALLAST TANKS PERMANENT ☐ YES IF ☐ NO (SEE F-15 BALLAST TANKS)

SEASUCTION SEAL #'S :

DRAFT: FWD (P) AFT (P) LIST : º (P) / (S)

(S) (S)

SEA CONDITION:

VESSEL'S STAFF	INSPECTOR

CORRECTED MEASURE : w = Wedge corrected, t = Trim corrected

API @ 60F / DENSITY @ 15C	SOURCE :
S & W - VOL % :	SOURCE :
S & W - VOL :	WCF TABLE : (t)
NET STANDARD VOLUME	
GROSS STANDARD WEIGHT	
NET STANDARD WEIGHT	
TOTAL CALC. VOL. ARRIVAL / DEPARTURE	2569.11
REMARKS :	
^ VOLUME CALCULATED IN ACCORDANCE WITH	
¤ LIQUID LEVEL GAUGES IN ACCORDANCE WITH	API MPMS 17.2.5.2
§ TEMPERATURE DETERMINATION IN ACCORDANCE WITH	API MPMS 17.2.5.3

Copyright SGS-OG&C 2001 - Rev April 2005

Services rendered according to published General Terms and Conditions

2/23/09 SC

EPAPA01000764

F-16

PORT / TERMINAL: Lake Charles, La / Citgo		OFFICE: LAKE CHARLES, LA	TEL: (337) 625-1455
VESSEL: CCL 26	VOY #:	INSPECTOR(S): JOE BUSBY	SGS FILE: 131481
DATE: 2/20/2009 CARGO: Spent Caustic		CLIENT: CITGO	REF:

SGS

☑ OBQ ☐ ROB MEASUREMENT

NOTE: DO NOT USE V.C.F. IF TEMPERATURE IS NOT TAKEN

Oil Gas & Chemicals Services Division.

UNITS: ☑ FT-IN ☐ FT ☐ MM ☐ OTHER: | UNITS: ☑ BBLS ☐ U.S. GALS ☐ M³ ☐ OTHER:

TANK #	REFERENCE HEIGHT	OBSERVED REFERENCE HEIGHT	*	OBSERVED INNAGE	FREE WATER INNAGE	NON-LIQUID INNAGE	AVG. TEMP	CORRECTED MEASURE	TOTAL OBSERVED VOLUME	^ V.C.F. (t)	FREE WATER VOLUME	NON-LIQUID VOLUME	LIQUID VOLUME
1C	VISUAL	VISUAL	A	0-0-0	0-0-0	0-0-0	60	0-0-0	0.00		0.00	0.00	0.00
2C	VISUAL	VISUAL	A	0-0-0	0-0-0	0-0-0	60	0-0-0	0.00		0.00	0.00	0.00
3C	VISUAL	VISUAL	A	0-0-0	0-0-0	0-0-0	60	0-0-0	0.00		0.00	0.00	0.00
								TOTALS	0.00		0.00	0.00	0.00

^ VOLUME CALCULATED IN ACCORDANCE WITH

On behalf of our client(s) we would like to bring to your attention that in our opinion:

Bbls of LIQUID MATERIAL

Bbls of NON-LIQUID MATERIAL

remains on board your vessel. To the extent we are aware of contractual relationships, this material belongs to our client(s) and should be pumped ashore. In case you are unable to do so please indicate your reasons below. In any event, we have to advise our client(s) of the above and reserve his right to seek compensation for the undelivered amount. Statements with regards to flowability and similiar advisory services express personal opinions without responsibility for SGS.

d = dip, u = Ullage; corrected measure, w = Wedge corrected, t = Trim corrected

GAUGE LOCATION: ☑ STANDPIPE ☐ G.H. on Expansion trunk ☐ OTHER:

* GAUGE POSITION: C = Center of tank F = Forward of Center A = Aft of Center

OBQ SAMPLED ☐ YES ☑ NO IF NO REASON

OBQ TESTED ☐ YES ☑ NO IF NO REASON

ROB SAMPLED ☐ YES ☑ NO IF NO REASON

DRAFT: FWD (P) 2-0 AFT (P) 2-6 LIST: º (P) / (S)

(S) 2-0 (S) 2-6

SEA CONDITION: CALM IN PORT

VESSEL'S STAFF	JOE BUSBY INSPECTOR

Copyright SGS-OG&C 1997 - Rev April 2005

Services rendered according to published General Terms and Conditions

2/23/09

SGS

Inspection Report (LOADING)

Subject :	CCL 26	Date :	2/23/2008	Our ref.:	942651
Product :	SULFIDIC CAUSTIC	Location :	Lake Charles, La / Citgo Refinery		
Client ref.:	TBN	Client :	CES Environmental Services		

Summary of Figures

		Bbls @ 60°F	Gallons @ 60°F	Long Tons	Metric Tonnes	Pounds
Shore Measurements						
Total Shore figures delivered	GSV	7,831.00	328,902.00			

Shoretanks no(s): TANK 182

Vessel's Measurements						
Vessel's figures before loading (OBQ) Free Water		0.00				
Vessel's figures before loading (OBQ) Liquid		0.00				
Vessel's figures before loading (OBQ) Non Liquid		0.00				
Vessel's figures before loading (OBQ) Total		0.00	0.00			
Vessel's figures TCV on board after loading		8,117.55	340,937.10			
Vessel's figures TCV loaded		8,117.55	340,937.10			
Vessel's figures Free Water loaded		0.00	0.00			
Vessel's figures GSV loaded		8,117.55	340,937.10			

Cargo stowage Cargo tanks no(s): CCL 26[1C, 2C, 3C]

Samples

SHORE TANK - 2X1 QUART RUNNING

BARGES - 2X1 QUART RUNNING PER CARGO TANK

Time Log

2/22/2008	0950	VESSEL ARRIVED AT CITGO REFINERY
	1000	INSPECTOR NOTIFIED
	1005	VESSEL DOCKED AT CITGO'S C-SLIP
	1100	INSPECTOR ARRIVED
	1115	COMMENCE BARGE OPENING INSPECTON
	1120	COMPLETE BARGE OPENING INSPECTION
	1130	1X8" CARGO HOSE CONNECTED
	1200	COMMENCE SHORE TANK # 182 OPENING INSPECTION(1ST)
	1230	COMPLETE SHORE TANK # 182 OPENING INSPECTION(1ST)
	1250	COMMENCE LOADING SPENT CAUSTIC
2/23/2008	0530	STOPPED LOADING (TO MAKE TRANSFER ON SHORE TANK)
	0630	COMMENCE SHORE TANK # 182 CLOSING INSPECTION(1ST)
	0710	COMPLETED SHORE TANK # 182 CLOSING INSPECTION(1ST)
	0735	COMMENCE TRANSFER TO SHORE TANK # 182
	1050	COMPLETED TRANSFER TO SHORE TANK # 182

1110	COMMENCE SHORE TANK # 182 OPENING INSPECTION(2ND)
1140	COMPLETED SHORE TANK # 182 OPENING INSPECTION
1200	RESUME LOADING
1635	COMPLETED LOADING(VESSEL STOP)
1640	COMMENCE BARGE CLOSING INSPECTION
1700	COMPLETED BARGE CLOSING INSPECTION
1700	1X8" CARGO HOSE DISCONNECTED
1735	COMMENCE SHORE TANK # 182 CLOSING INSPECTION
1745	COMPLETED SHORE TANK # 182 CLOSING INSPECTION
1800	VESSEL RELEASED BY TERMINAL

BRETT DAIGLE
for SGS Oil, Gas & Chemicals Services
2/25/2008

Shore volume calculated in accordance with: ASTM D 1250-04
Vessel volume calculated in accordance with: ASTM D 1250-04
Procedures as per applicable MPMS Chapter 3.1a, 7, 8.1 or 8.2, 12.1 or 12.2, 17.1, 17.2, 17.4.

Disclaimer

This document is issued by the Company under its General Conditions of Service accessible at http://www.sgs.com/terms_and_conditions.htm. The Client's attention is drawn to the limitation of liability, indemnification and jurisdiction issues defined therein.

Any other holder of this document is advised that information contained hereon reflects the Company's findings at the time of its intervention only and within the limits of Client's instructions, if any. The Company's sole responsibility is to its Client and this document does not exonerate parties to a transaction from exercising all their rights and obligations under the transaction documents. Any unauthorized alteration, forgery or falsification of the content or appearance of this document is unlawful and offenders may be prosecuted to the fullest extent of the law.
FIRCC REV. January 2007

SGS

NOT UNLOADED BA

Inspection Report (Loading)

Subject: CCL 7
Product : SPENT CAUSTIC
Client ref.: TBD

Date : 3/5/2009
Location : CITGO / LAKE CHARLES
Client : CES Environmental

Our ref.: 133562

Summary of Figures

		Bbls @ 60°F	Gallons @ 60°F
Shore Measurements			
Total Shore figures delivered	GSV	7,879.95	330,957.90
Average API Gravity @ 60°F	NSV		
Shoretanks no(s):	VESSEL W/VEF		
Vessel's Measurements			
Vessel's figures before loading (OBQ) Free Water		0.00	
Vessel's figures before loading (OBQ) Liquid		0.00	
Vessel's figures before loading (OBQ) Non Liquid		0.00	
Vessel's figures before loading (OBQ) Total		0.00	0.00
Vessel's figures TCV on board after loading		7,978.45	335,094.90
Vessel's figures TCV loaded		7,978.45	335,094.90
Vessel's figures Free Water loaded		0.00	0.00
Vessel's figures GSV loaded		7,978.45	335,094.90

Cargo stowage Cargo tanks no(s): CCL 7[1C, 2C, 3C]

Samples – Shore Tank - 1x1 Quart Running
Barges – 2x1 Quart Running per Cargo Tank

Quality – None Requested

Time Log

3/4/2009	1735	BARGE ARRIVED
	1745	BARGE DOCKED
	1945	INSPECTOR NOTIFIED
	2045	INSPECTOR ARRIVED
	2100	COMMENCED PRE-DECK INSPECTION
	2110	COMPLETED PRE-DECK INSPECTION
	2205	S/T 182 GAUGED OPEN AND SAMPLED
	2250	CARGO HOSE CONNECTED
	2305	COMMENCED LOADING
3/5/2009	1320	INSPECTOR NOTIFIED
	1320	DOWN FOR SHORETANK GAUGING, S/T 182 WENT ACTIVE
	1420	INSPECTOR ARRIVED
	1525	COMMENCED INSPECTION ON BARGE
	1555	COMPLETED INSPECTION ON BARGE
	1930	RESUMED LOADING CCL 7
	2200	INSPECTOR NOTIFIED
	2250	COMPLETED LOADING
	2300	INSPECTOR ARRIVED

SGS

2300	COMMENCED FINAL INSPECTION
2330	COMPLETED FINAL INSPECTION

Steve Cross
for SGS Oil, Gas & Chemicals Services
3/6/2009

Shore volume calculated in accordance with:
Vessel volume calculated in accordance with: ASTM D 1250-04
Procedures as per applicable MPMS Chapter 3.1a, 7, 8.1 or 8.2, 12.1 or 12.2, 17.1, 17.2, 17.4.

Disclaimer

This document is issued by the Company under its General Conditions of Service accessible at http://www.sgs.com/terms_and_conditions.htm. The Client's attention is drawn to the limitation of liability, indemnification and jurisdiction issues defined therein.

Any other holder of this document is advised that information contained hereon reflects the Company's findings at the time of its intervention only and within the limits of Client's instructions, if any. The Company's sole responsibility is to its Client and this document does not exonerate parties to a transaction from exercising all their rights and obligations under the transaction documents. Any unauthorized alteration, forgery or falsification of the content or appearance of this document is unlawful and offenders may be prosecuted to the fullest extent of the law.
FIRCC REV. January 2007

F-4

PORT / TERMINAL: Lake Charles, La / Citgo	OFFICE: LAKE CHARLES, LA TEL: (337) 625-1455
VESSEL: CCL 7 VOY #:	INSPECTOR(S): TM
DATE: 3/5/2009	SGS FILE: 133562
CARGO: SPENT CAUSTIC	CLIENT: REF:

SGS

TIME LOG

Oil Gas & Chemicals Services Division.

☑ AT LOADING ☐ AT TRANSFER ☐ AT DISCHARGE

YEAR 2009 / MONTH JAN FEB MAR APR MAY JUN JUL AUG SEP OCT NOV DEC

Date	Hour	
3/4	17:35	BARGE ARRIVED
3/4	17:45	BARGE DOCKED
3/4	19:45	INSPECTOR NOTIFIED
3/4	20:45	INSPECTOR ARRIVED
3/4	21:00	COMMENCED PRE-DECK INSPECTION
3/4	21:10	COMPLETED PRE-DECK INSPECTION
3/4	22:05	S/T 182 GAUGED OPEN AND SAMPLED
3/4	22:50	CARGO HOSE CONNECTED
3/4	23:05	COMMENCED LOADING
3/5	13:20	INSPECTOR NOTIFIED
3/5	13:20	DOWN FOR SHORETANK GAUGING, S/T 182 WENT ACTIVE
3/5	14:20	INSPECTOR ARRIVED
3/5	15:25	COMMENCED INSPECTION ON BARGE
3/5	15:55	COMPLETED INSPECTION ON BARGE
3/5	19:30	RESUMED LOADING CCL 7
3/5	22:00	INSPECTOR NOTIFIED
3/5	22:50	COMPLETED LOADING
3/5	23:00	INSPECTOR ARRIVED
3/5	23:00	COMMENCED FINAL INSPECTION
3/5	23:30	COMPLETED FINAL INSPECTION

DELAYS AND STOPPAGES :

CHECKED DATE 3/6/09

TIMES MARKED * ARE SUBMITTED TO US. TIME LOG PAGE OF

Copyright SGS-OG&C June 1997 - Rev Oct 2003 Services rendered according to published General Terms and Conditions

F-3A

PORT / TERMINAL: Lake Charles, La / Citgo	OFFICE: LAKE CHARLES, LA TEL: (337) 625-1455
VESSEL: CCL 7 VOY #:	INSPECTOR(S): TM
DATE: 3/5/2009	SGS FILE: 133562
CARGO: SPENT CAUSTIC	CLIENT: REF:

SGS

VOYAGE ANALYSIS REPORT

Oil Gas & Chemicals Services Division.

☑ LOADING ☐ V-V TRANSFER ☐ DISCHARGE ☐ SUMMARY | Type of Voyage | C/P DATE

Load Port/Terminal/Berth	ARRIVED	SAILED	Discharge Port/Terminal/Berth	ARRIVED	SAILED
L.C./ CITGO/ C-SLIP	3/4/2009	3/5/2009			

VOLUME UNITS ☑ BBLS ☐ GALS ☐ M³ ☐ L	SUPPLIER	RECEIVER	VCF SHORE LOAD	VCF SHORE DISCH	VCF VESSEL LOAD	VCF VESSEL DISCH

DESCRIPTION	API/DENSITY	TCV	FW	GSV	S&W	NSV	Reference
I. COMPARISON OF SHORE QUANTITIES IN CUSTODY TRANSFER							
Bill of Lading 1.		7879.95	0.00	7879.95			(1)
Outturn 2.							(2)
Diff. 3.							(3)=(2) - (1)
Diff. % 4.							(4) = (3) / (1) x 100
Recalc. B/L 5.	(a)		Recalculate if B/L and O/T use different tables.				(5) (a) Vol. Diff.
II. VESSEL/SHORE QUANTITIES AT ( ) LOAD PORT(S)							
Vessel Sailing A.		7978.45	0.00	7978.45	LIQUID	NON-LIQUID	(A)
OBQ (All) B.		0.00	0.00	0.00	0.00	0.00	(B)
Loaded C.		7978.45	0.00	7978.45			(C)=(A) - (B)
Difference D.		98.50	0.00	98.50			(D)=(C)-[(1) or (5)]
Difference % E.		1.25%		1.25%			(E)=(D)/[(1)or(5)]x100
Load Vessel Ratio F.		1.0125					(F)=(C)/[(1)or(5)]
Load VEF G.		1.01250					(G)
Theoretical Shore H.		7879.95					(H)=(C) / (G)
Theoretical Shore Diff. I.		0.00					(I)=(H) - [(1) or (5)]
Theoretical Shore Diff. % J.		0.00%					(J)=(I)/[(1) or (5)]x100
II. VESSEL/SHORE QUANTITIES AT ( ) DISCHARGE PORT(S)							
Vessel Arrival K.					LIQUID	NON-LIQUID	(K)
ROB (All) L.							(L)
Discharged M.							(M) = (K) - (L)
Difference N.							(N) = (2) - (M)
Difference % O.							(O) = (N) / (2) x 100
Discharge Vessel Ratio P.							(P) = (M) / (2)
Discharge VEF Q.							(Q)
Theoretical Shore R.							(R) = (M) / (Q)
Theoretical Shore Diff. S.							(S) = (2) - (R)
Theoretical Shore Diff. % T.							(T) = (S) / (2) x 100
III. VESSEL/'S COMPARISON OF LOADING AND DISCHARGE PORT(S) VCF TABLE MUST BE CONSISTENT							
Transit Difference U.							(U) = (K) - (A)
Difference % V.					LIQUID	NON-LIQUID	(V) = (U) / (A) x 100
OBQ/ROB Difference W.							(W) = (L) - (B)

ADJ TCV DIFF : TCV Difference (3) - OBQ (B) + ROB (L) (Quantity) / 0.00	[S&W(1)/GSV(1)]X100 S&W at Load Port :	[S&W(2)/GSV(2)]X100 S&W at Disch Port :

Comments :

Prepared by : TIM MC DONALD	Title : INSPECTOR	Company : SGS	Date Completed : 3/5/2009

CHECKED 3/6/09 DATE

Copyright SGS-OG&C June 1997 - Rev Oct 2003 Services rendered according to published General Terms and Conditions

F-1 Page 1 of 1

PORT / TERMINAL: Lake Charles, La / Citgo	OFFICE LAKE CHARLES, LA TEL (337) 625-1455
VESSEL CCL 7 VOY #	INSPECTOR(S): TM
DATE 3/5/2009	SGS FILE 133562
CARGO SPENT CAUSTIC	CLIENT CES Environmental REF

SGS

SHORE QUANTITY SUMMARY

Oil Gas & Chemicals Services Division.

☑ AT LOADING ☐ AT TRANSFER ☐ AT DISCHARGE ☑ SHORE TANK (STATIC) ☐ METER (DYNAMIC)

CUSTODY TRANSFER SAMPLE

☐ API @ 60°F : ☐ R.D. 60°F/60°F ☐ Density Lbs/Gal @

S&W % VOL:

SOURCE OF ANALYTICAL DATA:

	UNITS	VESSEL W/VEF	TANK/METER	TANK/METER	TANK/METER	TANK/METER
TOTAL CALCULATED VOLUME	BBLS	7879.95				
FREE WATER	BBLS	0.00				
GROSS STANDARD VOLUME	BBLS	7879.95				
S & W VOLUME	BBLS					
(NET) STANDARD VOLUME	BBLS					
WCF TABLE ( )						
GROSS STANDARD WEIGHT						
S & W WEIGHT						
(NET) STANDARD WEIGHT						

	UNITS	TANK/METER	TANK/METER	SHORELINE	TOTAL DELIVERED
TOTAL CALCULATED VOLUME	BBLS				7879.95
FREE WATER	BBLS				0.00
GROSS STANDARD VOLUME	BBLS				7879.95
S & W VOLUME	BBLS				
(NET) STANDARD VOLUME	BBLS				
					☐ GSV ☐ NSV ☐ SV @
GROSS STANDARD WEIGHT					
S & W WEIGHT					
(NET) STANDARD WEIGHT					

CHECKED DATE: 3/6/09

STOWAGE O/B VESSEL:

B/L DATE:

REMARKS QUANTITY CONFIRMED

with _____ of _____

with _____ of _____

Date _____ Time _____

QUANTITY CHANGES YES NO IF YES STATE REASON

Copyright SGS-OG&C June 1997 - Rev Oct 2003

Services rendered according to published General Terms and Conditions

F-2

PORT / TERMINAL: Lake Charles, La / Citgo	OFFICE: LAKE CHARLES, LA TEL: (337) 625-1455
VESSEL: CCL 7 VOY #:	INSPECTOR(S): TM
DATE: 3/5/2009	SGS FILE: 133562
CARGO: SPENT CAUSTIC	CLIENT: REF:

SGS

VESSEL QUANTITY SUMMARY

Oil Gas & Chemicals Services Division.

☑ AT LOADING ☐ AT TRANSFER ☐ AT DISCHARGE ☐ CRUDE OIL ☑ PRODUCTS

☐ API @ 60°F : ☐ R.D. 60°F/60°F ☐ Density Lbs/Gal @

S&W % VOL:

SOURCE OF ANALYTICAL DATA:

	VOLUME		WCF (t 8)	WEIGHT		
	BBLS	U.S. GALS		POUNDS	LONG TONS	METRIC TONS (AIR)
VESSEL'S QUANTITIES	V.E.F. CORRECTED : ☐ YES ☐ NO VEF:					
TOTAL CALCULATED VOL	7978.45	335094.90				
FREE WATER	0.00	0.00				
GROSS STANDARD VOLUME	7978.45	335094.90				
S & W VOLUME						
(NET) STANDARD VOLUME						

☑ OBQ ☐ ROB

LIQUID MATERIAL	0.00	0.00	8.96200	0.00	0.000	0.000
NON-LIQUID MATERIAL	0.00	0.00	8.96200	0.00	0.000	0.000
FREE WATER	0.00	0.00	8.96200	0.00	0.000	0.000
TOTAL	0.00	0.00	8.96200	0.00	0.000	0.000

☑ LOADED QUANTITIES ☐ DISCHARGED QUANTITIES

TOTAL CALCULATED VOL	7978.45	335094.90				
FREE WATER	0.00	0.00				
GROSS STANDARD VOLUME	7978.45	335094.90				
S & W VOLUME						
(NET) STANDARD VOLUME						

ARE SLOPS INCLUDED IN CALCULATIONS ☐ YES ☑ NO ☐ NO SLOPS ON BOARD

STOWAGE O/B VESSEL: 1-3C

REMARKS:

CHECKED DATE 3/6/09

Copyright SGS-OG&C 1995 - Rev Oct 2003

Services rendered according to published General Terms and Conditions

F-15

Page 3 of 3

PORT / TERMINAL: Lake Charles, La / Citgo	OFFICE: LAKE CHARLES, LA TEL: (337) 625-1455
VESSEL: CCL 7 VOY #:	INSPECTOR(S): TM SGS FILE: 133562
DATE: 3/5/2009 CARGO: SPENT CAUSTIC	CLIENT: REF:

SGS

VESSEL MEASUREMENT SYSTEM

☑ OPEN ☐ CLOSE / RESTRICTED

☐ ARRIVAL ☑ DEPARTURE

Oil Gas & Chemicals Services Division.

☑ AT LOADING ☐ AT TRANSHIPMENT ☐ AT DISCHARGE ☑ CARGO TANKS ☐ BALLAST TANKS ☐ NON/OTHER CARGO

UNITS : ☑ FT-IN ☐ FT ☐ MM ☐ OTHER : UNITS : ☑ BBLS ☐ U.S. GALS ☐ M³ ☐ OTHER :

TANK #	REFERENCE HEIGHT	OBSERVED REFERENCE HEIGHT	¤ ULLAGE	WATER INN	TEMPERATURES ºF § PROBE	AVG. TEMP	CORRECTED MEASURE	TOTAL OBSERVED VOLUME	FREE WATER	GROSS OBSERVED VOLUME	^ V.C.F. (t)	GROSS STANDARD VOLUME	*
1C	15-7-0/0	15-7-0/0	4-10-0/0	NIL	68.7	68.7	10-9-0/0	2776.40	0.00	2776.40			
2C	15-7-0/0	15-7-0/0	5-0-0/0	NIL	68.5	68.5	10-7-0/0	2768.69	0.00	2768.69			
3C	15-7-0/0	15-7-0/0	6-3-1/2	NIL	68.6	68.6	9-3-1/2	2433.36	0.00	2433.36			
							TOTALS	7978.45	0.00	7978.45			

PROBE WAS CHECKED PRIOR TO USE ☐ YES ☑ NO ☑ NOT USED

GAUGE LOCATION : ☑ STANDPIPE ☐ G.H. on Expansion Trunk

☐ OTHER :

* GAUGE POSITION: C = Center of tank F = Forward of Center A = Aft of Center

SAMPLES DRAWN : 2X1QT PER TANK

CORRECTED MEASURE : w = Wedge corrected, t = Trim corrected

API @ 60F / DENSITY @ 15C	SOURCE :
S & W - VOL % :	SOURCE :
S & W - VOL :	WCF TABLE : (t)
NET STANDARD VOLUME	
GROSS STANDARD WEIGHT	
NET STANDARD WEIGHT	
TOTAL CALC. VOL. DEPARTURE	

BALLAST TANKS PERMANENT ☑ YES IF ☐ NO (SEE F-15 BALLAST TANKS)

SEASUCTION SEAL #'S :

DRAFT: FWD (P) 9-6 AFT (P) 9-6 LIST : º (P) / (S)

(S) 9-6 (S) 9-6

SEA CONDITION: CALM IN PORT

TIM MC DONALD	
VESSEL'S STAFF	INSPECTOR

REMARKS :

^ VOLUME CALCULATED IN ACCORDANCE WITH	ASTM D 1250-04
¤ LIQUID LEVEL GAUGES IN ACCORDANCE WITH	API MPMS 17.2.5.2
§TEMPERATURE DETERMINATION IN ACCORDANCE WITH	API MPMS 17.2.5.3

Copyright SGS-OG&C 2001 - Rev April 2005

Services rendered according to published General Terms and Conditions

CHECKED
DATE 3/6/09

F-16

PORT / TERMINAL: Lake Charles, La / Citgo		OFFICE: LAKE CHARLES, LA	TEL: (337) 625-1455
VESSEL: CCL 7	VOY #:	INSPECTOR(S): TM	SGS FILE: 133562
DATE: 3/5/2009 CARGO: SPENT CAUSTIC		CLIENT:	REF:

SGS

☑ **OBQ** ☐ **ROB MEASUREMENT**

NOTE: DO NOT USE V.C.F. IF TEMPERATURE IS NOT TAKEN

Oil Gas & Chemicals Services Division.

UNITS: ☑ FT-IN ☐ FT ☐ MM ☐ OTHER: | UNITS: ☑ BBLS ☐ U.S. GALS ☐ M³ ☐ OTHER:

TANK #	REFERENCE HEIGHT	OBSERVED REFERENCE HEIGHT	*	OBSERVED INNAGE	FREE WATER INNAGE	NON-LIQUID INNAGE	AVG. TEMP	CORRECTED MEASURE	TOTAL OBSERVED VOLUME	^ V.C.F. (t)	FREE WATER VOLUME	NON-LIQUID VOLUME	LIQUID VOLUME
1C	15-7-0-0/0	15-7-0/0		0-0-0/0	NIL	NIL	60	0-0-0/0	0.00		0.00	0.00	0.00
2C	15-7-0/0	15-7-0/0		0-0-0/0	NIL	NIL	60	0-0-0/0	0.00		0.00	0.00	0.00
3C	15-7-0/0	15-7-0/0		0-0-0/0	NIL	NIL	60	0-0-0/0	0.00		0.00	0.00	0.00
								TOTALS	0.00		0.00	0.00	0.00

^ VOLUME CALCULATED IN ACCORDANCE WITH ASTM D 1250-04

On behalf of our client(s) we would like to bring to your attention that in our opinion :

Bbls of LIQUID MATERIAL

Bbls of NON-LIQUID MATERIAL

remains on board your vessel. To the extent we are aware of contractual relationships, this material belongs to our client(s) and should be pumped ashore. In case you are unable to do so please indicate your reasons below. In any event, we have to advise our client(s) of the above and reserve his right to seek compensation for the undelivered amount. Statements with regards to flowability and similiar advisory services express personal opinions without responsibility for SGS.

d = dip, u = Ullage; corrected measure, w = Wedge corrected, t = Trim corrected

GAUGE LOCATION: ☑ STANDPIPE ☐ G.H. on Expansion trunk ☐ OTHER:

* GAUGE POSITION: C = Center of tank F = Forward of Center A = Aft of Center

OBQ SAMPLED ☐ YES ☑ NO IF NO REASON

OBQ TESTED ☐ YES ☑ NO IF NO REASON

ROB SAMPLED ☐ YES ☑ NO IF NO REASON

DRAFT: FWD (P) 1-6 AFT (P) 2-0 LIST: º (P) / (S)

(S) 1-6 (S) 2-0

SEA CONDITION: CALM IN PORT

VESSEL'S STAFF	TIM MC DONALD INSPECTOR

Copyright SGS-OG&C 1997 - Rev April 2005

Services rendered according to published General Terms and Conditions

CHECKED
DATE 3/6/09
SC

F-17

Page 1 of 1

PORT / TERMINAL: Lake Charles, La / Citgo		OFFICE: LAKE CHARLES, LA	TEL: (337) 625-1455
VESSEL: CCL 7	VOY #:	INSPECTOR(S): TM	SGS FILE: 133562
DATE: 3/5/2009	CARGO: SPENT CAUSTIC	CLIENT:	REF:

SGS

VESSEL'S EXPERIENCE FACTOR

☑ AT LOADING ☐ AT DISCHARGE

Oil Gas & Chemicals Services Division.

1	2	3	4	5	6	7	8	9	10	11	12	13	14
				VESSEL			SHORE				'QUALIFIED VOYAGES		
VOYAGE NUMBER	CARGO DESCRIPTION	TERMINAL	DATE	☑ SAILING TCV ☐ ARRIVING TCV	MINUS ☐ OBQ ☐ ROB	☐ LOAD TCV ☐ DISCH TCV	TCV	VCF TABLE	VESSE / SHORE RATIO	* QUAL VOY Y/N	NO.	VESSEL TCV	SHORE TCV
Last	Caustic	Citgo	02/03/09	8199	40	8159	8059		1.01244	Y	1	8159	8059
2nd	Caustic	Citgo	01/14/09	7725	0	7725	7624		1.01326	Y	2	7725	7624
3rd	Caustic	Citgo	08/26/09	9130	18	9112	9088		1.00268	N			
4th	Caustic	Citgo	08/18/08	8150	0	8150	7993		1.01971	N			
5th	Caustic	Citgo	08/03/08	8039	0	8039	7625		1.05436	N			
6th	Caustic	Citgo	06/27/08	8135	0	8135	7998		1.01723	N			
7th	Caustic	Citgo	06/17/08	8098	0	8098	8003		1.01191	Y	3	8098	8003
8th	Caustic	Citgo	03/19/08	7512	61	7451	7181		1.03748	N			
9th													
10th													
11th													
12th													
13th													
14th													
15th													
16th													
17th													
18th													
19th													
20th													
						TOTALS	49380	48764	1.01264		TOTALS	23983	23686
									AVERAGE RATIO		☐ LOAD ☐ DISCH		1.0125

ALL VOLUMES OR WEIGHTS IN ☐ BBLS ☐ M3 ☐ M. TONS ☐ OTHER

PRESENT VOYAGE (NUMBER): GAUGING: ☐ MANUAL ☐ ATG

T.C.V.	☐ LOADED ☐ DISCHARGE	
THEORETICAL	☐ B/LADING ☐ OUTTURN	
ACTUAL	☐ B/LADING ☐ OUTTURN	
	DIFFERENCE	% 0.0

* QUALIFYING VOYAGE
If an individual Vessel/Shore gross error difference within 2%.
If an individual Vessel/Shore Ratio is within + or - 0.0030 of the Average Ratio.

NOTES - Do not include load and discharge information on the same form.
- Exclude load and discharge data where shore measurements are not available.
- Exclude voyages prior to any structural modifications which affect the vessel's cargo capacity.
- Exclude data from 1st voyage after dry dock.

Copyright SGS-OC&C 1997 - Rev Mar 2007

Services rendered according to published General Terms and Conditions

CHECKED
DATE 3/6/09

SGS

Shore volume calculated in accordance with:
Vessel volume calculated in accordance with:
Definition of Terms as per MPMS Chapter 1.
Procedures as per applicable MPMS Chapter 3.1a, 7, 8.1 or 8.2, 12.1 or 12.2, 17.1, 17.2, 17.4.

DISCLAIMER

This document is issued by the Company under its General Conditions of Service accessible at http://www.sgs.com/terms_and_conditions.htm. The Client's attention is drawn to the limitation of liability, indemnification and jurisdiction issues defined therein.

Any other holder of this document is advised that information contained hereon reflects the Company's findings at the time of its intervention only and within the limits of Client's Instructions, if any. The Company's sole responsibility is to its Client and this document does not exonerate parties to a transaction from exercising all their rights and obligations under the transaction documents. Any unauthorized alteration, forgery or falsification of the content or appearance of this document is unlawful and offenders may be prosecuted to the fullest extent of the law. FIRCC REV. January 2007

SGS

NOT UNLOADED ?
BA

Inspection Report (LOADING)

Subject : CCL 7
Product : SPENT CAUSTIC
Client ref: TBD

Date : 3/22/2009
Location : Lake Charles, La / CITGO PETROLEUM
Client : CES ENVIRONMENTAL SERVICES

Our ref.: 134636

Summary of Figures

		Bbls @ 60°F	Gallons @ 60°F	Long Tons	Metric Tonnes	Pounds
Shore Measurements						
Total Shore figures received	GSV	7,001.06	294,044.52			
Average API Gravity @ 60°F						
Shoretanks no(s):	TANK 182 (1), TANK 182 (2)					
Vessel's Measurements						
Vessel's figures before loading (OBQ)	Free Water	0.00				
Vessel's figures before loading (OBQ)	Liquid	886.19				
Vessel's figures before loading (OBQ)	Non Liquid	0.00				
Vessel's figures before loading (OBQ)	Total	886.19	37,219.98			
Vessel's figures TCV on board after loading		8,086.09	339,615.78			
Vessel's figures TCV loaded		7,199.90	302,395.80			
Vessel's figures Free Water loaded		0.00	0.00			
Vessel's figures GSV loaded		7,199.90	302,395.80			

Cargo stowage Cargo tanks no(s): CCL 7[3C, 2C, 1C]

Letter of Protest

Subject : CCL 7

SEE THE ATTACHED

Samples

SHORE TANK: 2 QUARTS RUNNING
VESSEL: 2 QTS RUNNING AT OPENING MEASUREMENTS ON ALL VESSEL TANKS AS PER API STANDARDS.

Quality

NO ANALYSIS REQUESTED

Time Log

3/21/2009	0800	INSPECTOR NOTIFIED OF VESSELS ARRIVAL
	1032	INSPECTOR ARRIVED AT CITGO REF
	1050	INSPECTOR BOARDED BARGE
	1052	COMMENCED BARGE INSPECTION
	1115	COMPLETED BARGE INSPECTION
	1136	COMMENCED SHORE TANK 182 INSPECTION
	1155	COMPLETED SHORE TANK INSPECTION
	1250	1X8" CARGO HOSE CONNECTED
	1315	LOADING OF BARGE COMMENCED
	1325	INSPECTOR DEPARTED
	1545	PAPER WORK COMPLETED

SGS North America Inc. | Oil, Gas & Chemicals Services
4701 E. NAPOLEON SULPHUR, LA 70663 t((337) 625-1455) f((337) 625-1721) www.sgs.com

Member of the SGS Group (Société Générale de Surveillance)

SGS

3/22/2009	0122	INSPECTOR NOTIFIED OF TRANSFER SUSPENSION
	0308	INSPECTOR ARRIVED AT REFINERY
	0315	TRANSFER TO BARGE SUSPENDED
	0330	INSPECTOR COMMENCED SHORE TANK 182 (CLOSE) INSPECTION
	0350	INSPECTOR COMPLETED SHORE TANK INSPECTION
	0402	COMMENCED TRANSFER INTO ST 182 FROM OTHER ST
	0435	INSPECTOR DEPARTED
	0730	* COMPLETED TRANSFER INTO ST 182 FROM OTHER ST
	0819	INSPECTOR NOTIFIED OF SHORE TANK 182 READY TO BE OPEN
	0915	INSPECTOR ARRIVED
	0942	COMMENCED INSPECTION (OPEN) OF SHORE TANK 182
	0955	COMPLETED INSPECTION
	1022	TRANSFER TO BARGE RESUMED
	1038	INSPECTOR DEPARTED
	1130	INSPECTOR NOTIFIED WITH 1 HOUR NOTICE OF REACHING DRAFT
	1148	INSPECTOR ARRIVED AT CITGO REFINERY
	1205	TRANSFER TO BARGE COMPLETED
	1220	BARGE INSPECTION COMMENCED
	1308	BARGE INSPECTION COMPLETED
	1412	DOCUMENTS ON BOARD
	1430	COMMENCED ST 182 INSPECTION (CLOSE)
	1451	COMPLETED ST INSPECTION
	1525	INSPECTOR DEPARTED CITGO
	1930	PAPERWORK COMPLETED

Additional events, Stoppages and Delays

3/22/2009	0315	TRANSFER TO BARGE SUSPENDED

BRETT DAIGLE
for SGS Oil, Gas & Chemicals Services
3/23/2009

Shore volume calculated in accordance with: ASTM D 1250-04
Vessel volume calculated in accordance with: ASTM D 1250-04
Procedures as per applicable MPMS Chapter 3.1a, 7, 8.1 or 8.2, 12.1 or 12.2, 17.1, 17.2, 17.4

Disclaimer

This document is issued by the Company under its General Conditions of Service accessible at http://www.sgs.com/terms_and_conditions.htm. The Client's attention is drawn to the limitation of liability, indemnification and jurisdiction issues defined therein

Any other holder of this document is advised that information contained hereon reflects the Company's findings at the time of its intervention only and within the limits of Client's instructions, if any. The Company's sole responsibility is to its Client and this document does not exonerate parties to a transaction from exercising all their rights and obligations under the transaction documents. Any unauthorized alteration, forgery or falsification of the content or appearance of this document is unlawful and offenders may be prosecuted to the fullest extent of the law
FIRCC REV. January 2007

F-3A

PORT / TERMINAL: Lake Charles, La / Citgo	OFFICE: LAKE CHARLES, LA TEL: (337) 625-1455
VESSEL: CCL 7 VOY #:	INSPECTOR(S): Mitchell Heuring
DATE: 3/21/2009	SGS FILE: 134636
CARGO: Spent Caustic	CLIENT: CES Environmental Servi REF: TBD

SGS

VOYAGE ANALYSIS REPORT

Oil Gas & Chemicals Services Division.

☐ LOADING ☐ V-V TRANSFER ☑ DISCHARGE ☐ SUMMARY

Type of Voyage	C/P DATE
Simple	

Load Port/Terminal/Berth	ARRIVED	SAILED	Discharge Port/Terminal/Berth	ARRIVED	SAILED
LAKE CHARLES/ CITGO REF	3/21/2009	3/22/2009			

VOLUME UNITS	SUPPLIER	RECEIVER	VCF SHORE LOAD	VCF SHORE DISCH	VCF VESSEL LOAD	VCF VESSEL DISCH
☑ BBLS ☐ GALS ☐ M³ ☐ L	CITGO	CES ENVIR.				

DESCRIPTION	API/DENSITY	TCV	FW	GSV	S&W	NSV	Reference
I. COMPARISON OF SHORE QUANTITIES IN CUSTODY TRANSFER							
Bill of Lading 1.		7001.06	0.00	7001.06			(1)
Outturn 2.							(2)
Diff. 3.							(3)=(2) - (1)
Diff. % 4.							(4) = (3) / (1) x 100
Recalc. B/L 5.	(a)		Recalculate if B/L and O/T use different tables.				(5) (a) Vol. Diff.
II. VESSEL/SHORE QUANTITIES AT (1) LOAD PORT(S)							
Vessel Sailing A.		8086.09	0.00	8086.09	LIQUID	NON-LIQUID	(A)
OBQ (All) B.		886.19	0.00	886.19	886.19	0.00	(B)
Loaded C.		7199.90	0.00	7199.90			(C)=(A) - (B)
Difference D.		198.84	0.00	198.84			(D)=(C)-[(1) or (5)]
Difference % E.		2.84%		2.84%			(E)=(D)/[(1)or(5)]x100
Load Vessel Ratio F.		1.0284					(F)=(C)/[(1)or(5)]
Load VEF G.		1.00000					(G)
Theoretical Shore H.		7199.90					(H)=(C) / (G)
Theoretical Shore Diff. I.		198.84					(I)=(H) - [(1) or (5)]
Theoretical Shore Diff. % J.		2.84%					(J)=(I)/[(1) or (5)]x100
II. VESSEL/SHORE QUANTITIES AT ( ) DISCHARGE PORT(S)							
Vessel Arrival K.					LIQUID	NON-LIQUID	(K)
ROB (All) L.							(L)
Discharged M.							(M) = (K) - (L)
Difference N.							(N) = (2) - (M)
Difference % O.							(O) = (N) / (2) x 100
Discharge Vessel Ratio P.							(P) = (M) / (2)
Discharge VEF Q.							(Q)
Theoretical Shore R.							(R) = (M) / (Q)
Theoretical Shore Diff. S.							(S) = (2) - (R)
Theoretical Shore Diff. % T.							(T) = (S) / (2) x 100
III. VESSEL/'S COMPARISON OF LOADING AND DISCHARGE PORT(S) VCF TABLE MUST BE CONSISTENT							
Transit Difference U.							(U) = (K) - (A)
Difference % V.					LIQUID	NON-LIQUID	(V) = (U) / (A) x 100
OBQ/ROB Difference W.							(W) = (L) - (B)

ADJ TCV DIFF : TCV Difference (3) - OBQ (B) + ROB (L) (Quantity) / 0.00	S&W at Load Port : [S&W(1)/GSV(1)]X100	S&W at Disch Port : [S&W(2)/GSV(2)]X100

Comments :

Prepared by :	Title :	Company :	Date Completed :

Copyright SGS-OG&C June 1997 - Rev Oct 2003

Services rendered according to published General Terms and Conditions

CHECKED DATE 3/23/09

F-5

PORT / TERMINAL: Lake Charles, La / Citgo	OFFICE: LAKE CHARLES, LA TEL: (337) 625-1455
VESSEL: CCL 7 VOY #:	INSPECTOR(S): Mitchell Heuring
DATE: 3/22/2009	SGS FILE: 134636
CARGO: Spent Caustic	CLIENT: CITGO PETROLEUM REF: TBD

SGS

☑ LETTER OF PROTEST (A) Oil Gas & Chemicals Services Division.

☐ NOTICE OF APPARENT DISCREPANCY(B)

☑ AT LOADING ☐ AT TRANSFER ☐ AT DISCHARGE ☑ Shore ☑ Vessel

☑ TO THE MASTER AND / OR OWNERS AND / OR AGENTS OF THE VESSEL: CCL 7

☑ TO THE TERMINAL REPRESENTATIVE OF: CITGO PETROLEUM LAKE CHARLES

ON BEHALF OF OUR PRINCIPAL(S), WE HEREBY NOTIFY YOU THAT ON THE 22 (DAY OF) March (MONTH) 2009 (YEAR)

AT 14:55 (HR) THE FOLLOWING WAS OBSERVED:

BARGE - SHORE DIFFERENCE:

7,001.06 BBLS: SHORE TANK 182 DELIVERED

7,199.90 BBLS : CCL 7 BBLS RECEIVED

198.84 BBLS: DIFFERENCE

2.84%: PERCENTAGE

(A) ACCORDINGLY YOU MAY BE HELD RESPONSIBLE FOR THE LOSS AND DAMAGE THEREBY SUSTAINED, AS WELL AS ANY CONSEQUENTIAL LOSS AND DAMAGE ARISING THEREFROM.

(B) ACCORDINGLY YOU ARE HEREBY NOTIFIED THAT FURTHER INVESTIGATION IS INTENDED TO RESOLVE THIS DISCREPANCY.

RECEIPT ACKNOWLEDGED:

FOR VESSEL	FOR TERMINAL	Mitchell Heuring INSPECTOR

CHECKED DATE 8/23/09

Copyright SGS-OG&C 1997 - Rev Oct 2003

Services rendered according to published General Terms and Conditions

F-1

PORT / TERMINAL: Lake Charles, La / Citgo	OFFICE LAKE CHARLES, LA TEL (337) 625-1455
VESSEL CCL 7 VOY #	INSPECTOR(S): Mitchell Heuring
DATE 3/21/2009	SGS FILE 134636
CARGO Spent Caustic	CLIENT CES Environmental Servi REF TBD

SGS

SHORE QUANTITY SUMMARY

Oil Gas & Chemicals Services Division.

☐ AT LOADING ☐ AT TRANSFER ☑ AT DISCHARGE	☑ SHORE TANK (STATIC) ☐ METER (DYNAMIC)
CUSTODY TRANSFER SAMPLE	
☑ API @ 60°F : ☐ R.D. 60°F/60°F	☐ Density Lbs/Gal @
S&W % VOL:	
SOURCE OF ANALYTICAL DATA:	

	UNITS	TANK 182 (1)	TANK 182 (2)			
TOTAL CALCULATED VOLUME	BBLS	6584.52	416.54			
FREE WATER	BBLS	0.00	0.00			
GROSS STANDARD VOLUME	BBLS	6584.52	416.54			
S & W VOLUME	BBLS					
(NET) STANDARD VOLUME	BBLS					
WCF TABLE (1 1)						
GROSS STANDARD WEIGHT						
S & W WEIGHT						
(NET) STANDARD WEIGHT						

	UNITS			SHORELINE	TOTAL DELIVERED
TOTAL CALCULATED VOLUME	BBLS				7001.06
FREE WATER	BBLS				0.00
GROSS STANDARD VOLUME	BBLS				7001.06
S & W VOLUME	BBLS				
(NET) STANDARD VOLUME	BBLS				
					☑ GSV ☐ NSV ☐ SV @
GROSS STANDARD WEIGHT					
S & W WEIGHT					
(NET) STANDARD WEIGHT					

STOWAGE O/B VESSEL:	
	B/L DATE:
REMARKS QUANTITY CONFIRMED with _____ of _____ with _____ of _____ Date _____ Time _____	QUANTITY CHANGES YES ☐ NO IF YES STATE REASON

Copyright SGS-OG&C June 1997 - Rev Oct 2003

Services rendered according to published General Terms and Conditions

CHECKED DATE 3/23/09

F-2 Page 1 of 1

PORT / TERMINAL: Lake Charles, La / Citgo	OFFICE: LAKE CHARLES, LA TEL: (337) 625-1455
VESSEL: CCL 7 VOY #:	INSPECTOR(S): Mitchell Heuring
DATE: 3/21/2009	SGS FILE: 134636
CARGO: Spent Caustic	CLIENT: CES Environmental Servi REF: TBD

SGS

VESSEL QUANTITY SUMMARY

Oil Gas & Chemicals Services Division.

☑ AT LOADING ☐ AT TRANSFER ☐ AT DISCHARGE ☐ CRUDE OIL ☑ PRODUCTS

☐ API @ 60°F : ☐ R.D. 60°F/60°F ☐ Density Lbs/Gal @

S&W % VOL:

SOURCE OF ANALYTICAL DATA:

	VOLUME		WCF (t)	WEIGHT		
	BBLS	U.S. GALS		POUNDS	LONG TONS	METRIC TONS (AIR)
VESSEL'S QUANTITIES	V.E.F. CORRECTED : ☐ YES ☐ NO VEF:					
TOTAL CALCULATED VOL	8086.09	339615.78				
FREE WATER	0.00	0.00				
GROSS STANDARD VOLUME	8086.09	339615.78				
S & W VOLUME						
(NET) STANDARD VOLUME						

☑ OBQ ☐ ROB

LIQUID MATERIAL	886.19	37219.98				
NON-LIQUID MATERIAL	0.00	0.00				
FREE WATER	0.00	0.00				
TOTAL	886.19	37219.98				

☑ LOADED QUANTITIES ☐ DISCHARGED QUANTITIES

TOTAL CALCULATED VOL	7199.90	302395.80				
FREE WATER	0.00	0.00				
GROSS STANDARD VOLUME	7199.90	302395.80				
S & W VOLUME						
(NET) STANDARD VOLUME						

ARE SLOPS INCLUDED IN CALCULATIONS ☐ YES ☐ NO ☑ NO SLOPS ON BOARD

STOWAGE O/B VESSEL: 1-3 C

REMARKS:

Copyright SGS-OG&C 1995 - Rev Oct 2003

Services rendered according to published General Terms and Conditions

CHECKED DATE 5/23/09

F-4

PORT / TERMINAL: Lake Charles, La / Citgo	OFFICE: LAKE CHARLES, LA TEL: (337) 625-1455
VESSEL: CCL 7 VOY #:	INSPECTOR(S): Mitchell Heuring
DATE: 3/21/2009	SGS FILE: 134636
CARGO: Spent Caustic	CLIENT: CES Environmental Servi REF: TBD

SGS

TIME LOG

Oil Gas & Chemicals Services Division.

☑ AT LOADING ☐ AT TRANSFER ☐ AT DISCHARGE

YEAR 2009 / MONTH JAN FEB MAR APR MAY JUN JUL AUG SEP OCT NOV DEC

Date	Hour	
3/21	08:00	INSPECTOR NOTIFIED OF VESSELS ARRIVAL
3/21	10:32	INSPECTOR ARRIVED AT CITGO REF
3/21	10:50	INSPECTOR BOARDED BARGE
3/21	10:52	COMMENCED BARGE INSPECTION
3/21	11:15	COMPLETED BARGE INSPECTION
3/21	11:36	COMMENCED SHORE TANK 182 INSPECTION
3/21	11:55	COMPLETED SHORE TANK INSPECTION
3/21	12:50	1X8" CARGO HOSE CONNECTED
3/21	13:15	LOADING OF BARGE COMMENCED
3/21	13:25	INSPECTOR DEPARTED
3/21	15:45	PAPER WORK COMPLETED
3/22	01:22	INSPECTOR NOTIFIED OF TRANSFER SUSPENSION
3/22	03:08	INSPECTOR ARRIVED AT REFINERY
3/22	03:15	TRANSFER TO BARGE SUSPENDED
3/22	03:30	INSPECTOR COMMENCED SHORE TANK 182 (CLOSE) INSPECTION
3/22	03:50	INSPECTOR COMPLETED SHORE TANK INSPECTION
3/22	04:02	COMMENCED TRANSFER INTO ST 182 FROM OTHER ST
3/22	04:35	INSPECTOR DEPARTED
3/22	07:30	* COMPLETED TRANSFER INTO ST 182 FROM OTHER ST
3/22	08:19	INSPECTOR NOTIFIED OF SHORE TANK 182 READY TO BE OPEN
3/22	09:15	INSPECTOR ARRIVED
3/22	09:42	COMMENCED INSPECTION (OPEN) OF SHORE TANK 182
3/22	09:55	COMPLETED INSPECTION
3/22	10:22	TRANSFER TO BARGE RESUMED
3/22	10:38	INSPECTOR DEPARTED
3/22	11:30	INSPECTOR NOTIFIED WITH 1 HOUR NOTICE OF REACHING DRAFT
3/22	11:48	INSPECTOR ARRIVED AT CITGO REFINERY
3/22	12:05	TRANSFER TO BARGE COMPLETED
3/22	12:20	BARGE INSPECTION COMMENCED
3/22	13:08	BARGE INSPECTION COMPLETED
3/22	14:12	DOCUMENTS ON BOARD
3/22	14:30	COMMENCED ST 182 INSPECTION (CLOSE)
3/22	14:51	COMPLETED ST INSPECTION
DELAYS AND STOPPAGES :		
3/22	03:15	TRANSFER TO BARGE SUSPENDED

TIMES MARKED * ARE SUBMITTED TO US. TIME LOG PAGE OF

Copyright SGS-OG&C June 1997 - Rev Oct 2003 Services rendered according to published General Terms and Conditions

CHECKED DATE 3/23/09

F-4

PORT / TERMINAL: Lake Charles, La / Citgo	OFFICE: LAKE CHARLES, LA TEL: (337) 625-1455
VESSEL: CCL 7 VOY #:	INSPECTOR(S): Mitchell Heuring
DATE: 3/21/2009	SGS FILE: 134636
CARGO: Spent Caustic	CLIENT: CES Environmental Servi REF: TBD

SGS

TIME LOG

Oil Gas & Chemicals Services Division.

☑ AT LOADING ☐ AT TRANSFER ☐ AT DISCHARGE

YEAR 2009 / MONTH JAN FEB MAR APR MAY JUN JUL AUG SEP OCT NOV DEC

Date	Hour	
3/22	15:25	INSPECTOR DEPARTED CITGO
3/22	19:30	PAPERWORK COMPLETED

DELAYS AND STOPPAGES :

TIMES MARKED * ARE SUBMITTED TO US.

TIME LOG PAGE 2 OF 2

Copyright SGS-OG&C June 1997 - Rev Oct 2003

Services rendered according to published General Terms and Conditions

CHECKED DATE 5/23/09

PORT / TERMINAL: Lake Charles, La / Citgo		OFFICE LAKE CHARLES, LA	TEL (337) 625-1455
VESSEL CCL 7	VOY #	INSPECTOR(S): Mitchell Heuring	SGS FILE 134636
CARGO Spent Caustic		CLIENT CES Environmental Services	REF TBD

SGS

SHORE TANK MEASUREMENTS (STATIC)

☑ AT LOADING ☐ AT TRANSFER ☐ AT DISCHARGE Oil Gas & Chemicals Services Division.

SHORETANK # 182 REF HEIGHT : 29-11-3/4 GAUGE UNITS ☑ FT - IN ☐ FT ☐ MM ☐ OTHER :

OPEN DATE : 3/21/2009 TIME : 11:55 CLOSE DATE : 3/22/2009 TIME : 3:50

OBS. REF. HEIGHT	§ INNAGE	¤ WATER INNAGE	OBS. REF. HEIGHT	§ INNAGE	¤ WATER INNAGE
29-11-3/4	27-5-3/4		9-5-1/2	7-0-3/4	

§ MEASUREMENTS TAKEN IN ACCORDANCE WITH : INNAGE: API MPMS 3.1A.9.2

¤ FREE WATER DETERMINED IN ACCORDANCE WITH : API MPMS 3.1A.10.1

TEMPERATURES TAKEN IN ACCORDANCE WITH : API MPMS 7.6.4

^ VOLUME CALCULATED IN ACCORDANCE WITH : ASTM D 1250-04

PROD TEMP	67.3 x 0.875 = 58.8875		PROD TEMP	67.4 x 0.875 = 58.9750	
(+) AIR TEMP	x 0.125 =		(+) AIR TEMP	x 0.125 =	
TANK SHELLTEMPERATURE:	= 59		TANK SHELL TEMPERATURE	= 59	

ROOF CORRECTION INFO - STANDARD API:

CRITICAL ZONE RANGE FROM TO ROOF LEG ☐ HIGH ☐ LOW

	OPEN	CLOSE
AVG INN IN CRITICAL ZONE	☐ YES ☑ NO	☑ YES ☐ NO
SIDEGAUGE/ATG	29-3-5/8 27-11-9/16	6-9-1/2 7-5-1/2
TEMPERATURES °F	# ☑ PROBE ☐ MERCURY	# ☑ PROBE ☐ MERCURY
* ACTION TAKEN :	☑ U 67.3 ☑ M 67.3 ☑ L 67.3	☐ U ☐ M ☐ L
	☐ M	☑ M 67.4
	☐ OTHER*	☐ OTHER*
SIDETEMP/REMOTE	46.0 67.0	47 68.2
PROBE WAS CHECKED PRIOR TO USE	☑ YES ☐ NO ☐ NOT USED	
SAMPLING	☐ U ☐ M ☐ L	☐ U ☐ M ☐ L
* ACTION TAKEN :	☐ T ☐ B ☐ R	☐ T ☐ B ☐ R
	☑ OTHER* RUNNING	☐ OTHER*
AT ULLAGES :		
CAL. BY:	Ref TSh Temp : 60	OP TEMP :

	OPEN	CLOSE
INSPECTOR:	MITCH HEURING	MITCH HEURING
WITNESS:		
API @ 60°F		
SOURCE		
AMBIENT AIR TEMP		
TEMP OF TANK SHELL	59	59
AVG TEMP (0.5°F)	67.5	67.5
AVG INNAGE	27-5-3/4	7-0-3/4
AVG WATER INNAGE		
VOLUME UNITS ☑ BBLS ☐ M³ ☐ OTHER :		
TABLE VOLUME **	8820.16	2235.64
FREE WATER	0.00	0.00
OBSERVED VOLUME	8820.16	2235.64
TANK SHELL CORR.	1.00000	1.00000
OBSERVED VOLUME	8820.16	2235.64
ROOF CORRECTION	0.00	0.00
GROSS OBSERVED VOL.	8820.16	2235.64
^VCF TABLE : (t)	1.00000	1.00000
GROSS STANDARD VOL.	8820.16	2235.64
DIFFERENCE	6584.52	
CUSTODY TRANSFER SAMPLE:		
API @ 60°F		
S & W % VOL.		
S & W VOLUME		
NET STANDARD VOLUME		
WCF TABLE : (t)		
GROSS STANDARD WT.		
NET STANDARD WEIGHT		
WEIGHT UNITS ☐ LT ☐ MT ☑ LBS ☐ OTHER :		
** IS TABLE VOLUME IN ☑ BBLS ☐ M³ ☐ OTHER :		

CHECKED
DATE 30 3/28/09

Copyright SGS-OG&C 2001 - Rev April 2005

Services rendered according to published General Terms and Conditions

MAY-20-2009 08:42 CES ENVIROMENTAL 7137488664 P.035

EPAPA010000786

PORT / TERMINAL: Lake Charles, La / Citgo		OFFICE LAKE CHARLES, LA	TEL (337) 625-1455
VESSEL CCL 7	VOY #	INSPECTOR(S): Mitchell Heuring	SGS FILE 134636
CARGO Spent Caustic		CLIENT CES Environmental Services	REF TBD

SGS

SHORE TANK MEASUREMENTS (STATIC)

☑ AT LOADING ☐ AT TRANSFER ☐ AT DISCHARGE Oil Gas & Chemicals Services Division.

SHORETANK # 182 REF HEIGHT : 29-11-3/4 GAUGE UNITS ☑ FT - IN ☐ FT ☐ MM ☐ OTHER :

OPEN DATE : 3/22/2009 TIME : 9:55 CLOSE DATE : 3/22/2009 TIME : 14:51

OBS. REF. HEIGHT	§ INNAGE	¤ WATER INNAGE	OBS. REF. HEIGHT	§ INNAGE	¤ WATER INNAGE
17-11-7/8	15-4-3/8	0-0	16-3	14-0-7/8	0-0

§ MEASUREMENTS TAKEN IN ACCORDANCE WITH : INNAGE: API MPMS 3.1A.9.2

¤ FREE WATER DETERMINED IN ACCORDANCE WITH : API MPMS 3.1A.10.1

TEMPERATURES TAKEN IN ACCORDANCE WITH : API MPMS 7.6.4

^ VOLUME CALCULATED IN ACCORDANCE WITH : ASTM D 1250-04

PROD TEMP	72.2 x 0.875 =	63.1750	PROD TEMP	72.1 x 0.875 =	63.0875
(+) AIR TEMP	x 0.125 =		(+) AIR TEMP	x 0.125 =	
TANK SHELL TEMPERATURE:	=	63	TANK SHELL TEMPERATURE	=	63

ROOF CORRECTION INFO - STANDARD API:

CRITICAL ZONE RANGE FROM TO ROOF LEG ☐ HIGH ☐ LOW

	OPEN	CLOSE
AVG INN IN CRITICAL ZONE	☐ YES ☑ NO	☐ YES ☑ NO
SIDEGAUGE/ATG	15-4-3/8 15-11-7/16	13-7 14-2-13/16
TEMPERATURES °F	# ☑ PROBE ☐ MERCURY	# ☑ PROBE ☐ MERCURY
* ACTION TAKEN :	☑ U 72.2 ☑ M 72.2 ☑ L 72.2	☑ U 72.1 ☑ M 72.1 ☐ L 72.0
	☐ M	☐ M
	☐ OTHER*	☐ OTHER*
SIDETEMP/REMOTE	47 72.6	47 72.6
PROBE WAS CHECKED PRIOR TO USE	☑ YES ☐ NO ☐ NOT USED	
SAMPLING	☐ U ☐ M ☐ L	☐ U ☐ M ☐ L
* ACTION TAKEN :	☐ T ☐ B ☑ R	☐ T ☐ B ☐ R
	☐ OTHER*	☐ OTHER*
AT ULLAGES :		
	Ref TSh Temp : 60	OP TEMP :

	OPEN	CLOSE
INSPECTOR:	Mitchell Heuring	Mitchell Heuring
WITNESS:		
API @ 60°F		
SOURCE		
AMBIENT AIR TEMP		
TEMP OF TANK SHELL	63	63
AVG TEMP (0.5°F)	72.0	72.0
AVG INNAGE	15-4-3/8	14-0-7/8
AVG WATER INNAGE	0-0	0-0
VOLUME UNITS ☑ BBLS ☐ M³ ☐ OTHER :		
TABLE VOLUME **	4912.67	4496.13
FREE WATER	0.00	0.00
OBSERVED VOLUME	4912.67	4496.13
TANK SHELL CORR.	1.00000	1.00000
OBSERVED VOLUME	4912.67	4496.13
ROOF CORRECTION	0.00	0.00
GROSS OBSERVED VOL.	4912.67	4496.13
^ VCF TABLE : (t)	1.00000	1.00000
GROSS STANDARD VOL.	4912.67	4496.13
DIFFERENCE	416.54	
CUSTODY TRANSFER SAMPLE:		
API @ 60°F		
S & W % VOL.		
S & W VOLUME		
NET STANDARD VOLUME		
WCF TABLE : (t)		
GROSS STANDARD WT.		
NET STANDARD WEIGHT		
WEIGHT UNITS ☐ LT ☐ MT ☐ LBS ☐ OTHER :		
** IS TABLE VOLUME IN ☑ BBLS ☐ M³ ☐ OTHER :		

CHECKED
DATE
BL 5/23/07

Copyright SGS-OG&C 2001 - Rev April 2005

Services rendered according to published General Terms and Conditions

MAY-20-2009 08:42 CES ENVIROMENTAL 7137488664 P.036

EPAPA010000787

F-15

PORT / TERMINAL: Lake Charles, La / Citgo		OFFICE: LAKE CHARLES, LA	TEL: (337) 625-1455
VESSEL: CCL 7	VOY #:	INSPECTOR(S): Mitchell Heuring	SGS FILE: 134636
DATE: 3/21/2009 CARGO: Spent Caustic		CLIENT: CES Environmental Services	REF: TBD

SGS

VESSEL MEASUREMENT SYSTEM

☑ OPEN ☐ CLOSE / RESTRICTED

☐ ARRIVAL ☑ DEPARTURE

Oil Gas & Chemicals Services Division.

☑ AT LOADING ☐ AT TRANSHIPMENT ☐ AT DISCHARGE ☐ CARGO TANKS ☑ BALLAST TANKS ☐ NON/OTHER CARGO

UNITS : ☑ FT-IN ☐ FT ☐ MM ☐ OTHER : UNITS : ☑ BBLS ☐ U.S. GALS ☐ M³ ☐ OTHER :

TANK #	REFERENCE HEIGHT	OBSERVED REFERENCE HEIGHT	¤ ULLAGE	WATER INN	TEMPERATURES °F § PROBE			AVG. TEMP	CORRECTED MEASURE	TOTAL OBSERVED VOLUME	FREE WATER	GROSS OBSERVED VOLUME	^ V.C.F. (t 6B)	GROSS STANDARD VOLUME	*
3C	15-7	15-7-1/2	5-9-5/8	0-0	68.5	68.5	68.5	68.5	9-9-7/8	2573.50	0.00	2573.50	1.00000	2573.50	C
2C	15-7	15-7-3/4	5-4	0-0	68.5	68.5	68.5	68.5	10-3-3/4	2698.57	0.00	2698.57	1.00000	2698.57	C
1C	15-7	15-7-1/2	4-8-1/2	0-0	68.4	68.4	68.3	68.4	10-11	2814.02	0.00	2814.02	1.00000	2814.02	C
									TOTALS	8086.09	0.00	8086.09		8086.09	

PROBE WAS CHECKED PRIOR TO USE ☑ YES ☐ NO ☐ NOT USED

GAUGE LOCATION : ☐ STANDPIPE ☐ G.H. on Expansion Trunk

☑ OTHER :

* GAUGE POSITION: C = Center of tank F = Forward of Center A = Aft of Center

SAMPLES DRAWN : 2 qts run per vessel tank

CORRECTED MEASURE : w = Wedge corrected, t = Trim corrected

API @ 60°F	SOURCE :
S & W - VOL % :	SOURCE :
S & W - VOL :	WCF TABLE : (t 8)
NET STANDARD VOLUME	
GROSS STANDARD WEIGHT	
NET STANDARD WEIGHT	
TOTAL CALC. VOL. DEPARTURE	8086.09
REMARKS : VOLUMES BASED ON TOV	
^ VOLUME CALCULATED IN ACCORDANCE WITH	ASTM D 1250-04
¤ LIQUID LEVEL GAUGES IN ACCORDANCE WITH	API MPMS 17.2.5.2
§TEMPERATURE DETERMINATION IN ACCORDANCE WITH	API MPMS 17.2.5.3

BALLAST TANKS PERMANENT ☑ YES IF ☐ NO (SEE F-15 BALLAST TANKS)

SEASUCTION SEAL #'S :

DRAFT: FWD (P) 9-6 AFT (P) 9-6 LIST : ° (P) / (S)

(S) 9-6 (S) 9-6

SEA CONDITION: CALM AT PORT

VESSEL'S STAFF	Mitchell Heuring INSPECTOR

CHECKED

DATE 3/23/09

Services rendered according to published General Terms and Conditions

F-16

PORT / TERMINAL: Lake Charles, La / Citgo		OFFICE: LAKE CHARLES, LA	TEL: (337) 625-1455
VESSEL: CCL 7	VOY #: N/A	INSPECTOR(S): Mitchell Heuring	SGS FILE: 134636
DATE: 3/21/2009 CARGO: Spent Caustic		CLIENT: CES Environmental Services	REF: TBD

SGS

☑ **OBQ** ☐ **ROB MEASUREMENT**

NOTE: DO NOT USE V.C.F. IF TEMPERATURE IS NOT TAKEN

Oil Gas & Chemicals Services Division.

UNITS: ☑ FT-IN ☐ FT ☐ MM ☐ OTHER: | UNITS: ☑ BBLS ☐ U.S. GALS ☐ M³ ☐ OTHER:

TANK #	REFERENCE HEIGHT	OBSERVED REFERENCE HEIGHT	*	OBSERVED ULLAGE	FREE WATER INNAGE	NON-LIQUID INNAGE	AVG. TEMP	CORRECTED MEASURE	TOTAL OBSERVED VOLUME	^ V.C.F. (t 6B)	FREE WATER VOLUME	NON-LIQUID VOLUME	LIQUID VOLUME
3C	15-7	15-7-1/2		12-3-3/4	0-0	0-0	68.5	3-3-1/4	886.19	1.00000	0.00	0.00	886.19
2C	15-7	15-7-3/4		15-7-3/4	0-0	0-0	60.0	0-0	0.00	1.00000	0.00	0.00	0.00
1C	15-7	15-7-1/2		15-7-1/2	0-0	0-0	60.0	0-0	0.00	1.00000	0.00	0.00	0.00
								TOTALS	886.19		0.00	0.00	886.19

^ VOLUME CALCULATED IN ACCORDANCE WITH ASTM D 1250-04

On behalf of our client(s) we would like to bring to your attention that in our opinion :

Bbls of LIQUID MATERIAL

Bbls of NON-LIQUID MATERIAL

remains on board your vessel. To the extent we are aware of contractual relationships, this material belongs to our client(s) and should be pumped ashore. In case you are unable to do so please indicate your reasons below. In any event, we have to advise our client(s) of the above and reserve his right to seek compensation for the undelivered amount. Statements with regards to flowability and similiar advisory services express personal opinions without responsibility for SGS.

d = dip, u = Ullage; corrected measure, w = Wedge corrected, t = Trim corrected

GAUGE LOCATION: ☐ STANDPIPE ☐ G.H. on Expansion trunk ☑ OTHER: 6" GAUGE HATCH

* GAUGE POSITION: C = Center of tank F = Forward of Center A = Aft of Center

OBQ SAMPLED ☑ YES ☐ NO IF NO REASON

OBQ TESTED ☐ YES ☐ NO IF NO REASON

ROB SAMPLED ☐ YES ☐ NO IF NO REASON

DRAFT: FWD (P) 9-6 AFT (P) 9-6 LIST: º (P) / (S)

(S) 9-6 (S) 9-6

SEA CONDITION: CALM AT PORT

VESSEL'S STAFF	MITCHELL HEURING
	INSPECTOR

CHECKED

DATE 3/23/09

Copyright SGS-OG&C 1997 - Rev April 2005

Services rendered according to published General Terms and Conditions

F-7 Page 1 of 1

PORT / TERMINAL: Lake Charles, La / Citgo	OFFICE: LAKE CHARLES, LA TEL: (337) 625-1455
VESSEL: CCL 7 VOY #:	INSPECTOR(S): Mitchell Heuring
DATE: 3/21/2009	SGS FILE: 134636
CARGO: Spent Caustic	CLIENT: CES Environmental Servi REF: TBD

SGS

INFORMATION FOR CLEANLINESS INSPECTION

Oil Gas & Chemicals Services Division.

☑ AT LOADING ☐ AT TRANSFER ☐ AT DISCHARGE ☐ SHORE ☑ VESSEL

THE INFORMATION ON THIS LIRIS F-7 WILL BE USED TO COMPLETE LIRIS F-9 WAS SUBMITTED TO US BY THE PERSON(S) INDICATED BELOW

WE CONSULTED FOR TANK INSPECTION ON (DATE) 3/21/2009 (TIME) 10:50 WITH:

☐ VESSEL'S STAFF ☑ BARGE OPERATOR ☐ TERMINAL REPRESENTATIVE ☐ CHARTERER

☐ OTHER (SPECIFY):

PLEASE PRINT NAME(S)

TANK MATERIAL:

TANK #:	1C	2C	3C		
MATERIAL	MILD STEEL	MILD STEEL	MILD STEEL		
COATING NAME	EPOXY COAT	EPOXY COAT	EPOXY COAT		
APPARENT CONDITION *	ACCEPTABLE	ACCEPTABLE	ACCEPTABLE		
TANK #:					
MATERIAL					
COATING NAME					
APPARENT CONDITION *					

COATING WAS CHECKED AGAINST ☐ MANUFACTURERS ☐ OTHER (SPECIFY) CHECKLIST

IF NOT CHECKED, REASO

* SELECT: e.g. % MISSING % DISCOLORED %PEELING ACCEPTABLE etc. (ALL PERCENTAGES ARE APPROXIMATIONS)

OUR INSPECTION FOR F-9 COVERS THE CLEANLINESS OF THE COATINGS, NOT ITS SUITABILITY IN REGARD TO CARGO CONTAMINATION.

PREVIOUS CARGOES:

TANK#	THIRD LAST	SECOND LAST	LAST	COMPATIBLE
1-3 CENTERS	CAUSTIC	CAUSTIC	CAUSTIC	☑ YES ☐ NO
				☐ YES ☐ NO
				☐ YES ☐ NO
				☐ YES ☐ NO
				☐ YES ☐ NO
				☐ YES ☐ NO
				☐ YES ☐ NO
				☐ YES ☐ NO

LINES - PUMPS:

NAME	MATERIAL	LAST USED FOR	PRESSED WITH INERT GAS/AIR
LOAD LINES	MILD STEEL	CAUSTIC	☐ YES ☑ NO PRESSURE
			☐ YES ☐ NO PRESSURE
			☐ YES ☐ NO PRESSURE
			☐ YES ☐ NO PRESSURE
			☐ YES ☐ NO PRESSURE

THE CLEANLINESS CONDITION OF THE CARGO PUMPS AND LINES CANNOT BE ASCERTAINED BY VISUAL EXAMINATION. IT IS RECOMMENDED TO TEST "LINE" SAMPLES PRIOR TO COMMENCING THE TRANSFER AND "FIRST-IN" SAMPLES AT THE START OF THE TRANSFER TO MINIMIZE CARGO CONTAMINATION.

VESSEL REPRESENTATIVE

Mitchell Heuring
INSPECTOR

Copyright SGS-OG&C 1995 - Rev Oct 2003

Services rendered according to published General Terms and Conditions

CHECKED
DATE

F-8 Page 1 of 1

PORT / TERMINAL: Lake Charles, La / Citgo	OFFICE: LAKE CHARLES, LA TEL: (337) 625-1455
VESSEL: CCL 7 VOY #:	INSPECTOR(S): Mitchell Heuring
DATE: 3/21/2009	SGS FILE: 134636
CARGO: Spent Caustic	CLIENT: CES Environmental Servi REF: TBD

SGS

TANK CLEANLINESS INSPECTION

Oil Gas & Chemicals Services Division.

☑ AT LOADING ☐ AT TRANSFER ☐ AT DISCHARGE

☐ AS INSPECTION ONLY ☐ AS PRE-INSPECTION ☑ WITH CUSTODY TRANSFER

USE A SEPARATE FORM F-9 PER INSPECTION

THIS IS THE ☑ FIRST ☐ SECOND ☐ THIRD _____ TH INSPECTION

TANK(S): 1C,2C,3C

BASED ON SUBMITTED INFORMATION (SEE LIRIS F-7) AND :

☐ VISUAL CHECK FOR RESIDUES FROM DECKLEVEL (SEE LIRIS F-15 OR F-20)
☑ MEASURING OF RESIDUES FROM DECK LEVEL (SEE LIRIS F-16)
☐ PHYSICAL ENTRY (TANK SAFE ATMOSPHERE STATEMENT BELOW MUST BE COMPLETED PRIOR TO ENTRY)

AND ☑ VISUAL INSPECTION
AND ☐ WALLWASHING (ANALYTICAL REPORT ON FILE)
AND ☐ TESTING OF HEATING COILS

☑ WERE ACCEPTED FOR CLEANLINESS TO CARRY A CARGO OF SPENT CAUSTIC

☐ WERE REJECTED FOR CLEANLINESS TO CARRY A CARGO OF _____

REASON : _____

☐ SHIP'S STAFF AND/OR ☐ SGS SUPERVISOR AND/OR ☐ CLIENT NOTIFIED ON BY

☑ INSPECTION COMPLETED AT 11:15 HRS ON THE 3/21/2009

☐ TANK(S) SUBJECT TO A FINAL INSPECTION AT LOADING BERTH IN CASE OF PRE-INSPECTION

SIGNATURES : _____ FOR VESSEL _____ FOR TERMINAL Mitchell Heuring INSPECTOR

* IS THIS TANK ACCEPTANCE BASED SOLELY ON SUBMITTED INFORMATION EVALUATION ? ☐ YES ☑ NO

IF YES; ISSUE N.O.A.D. AND INFORM YOUR ☐ SGS SUPERVISOR AND/OR ☐ CLIENT(S) IMMEDIATELY.

TANK SAFE ATMOSPHERE STATEMENT

The undersigned certifies that those tank(s) indicated on line 13 of this page have been cleaned and gas freed as reported on the reverse side of the SGS F-7 and that the tank(s) in question are in all respects safe for entry. The undersigned hereby grants permission for SGS personnel to enter said tanks.

Tank Safe Atmosphere Statement signed _____ hours on _____

SIGNATURES : _____ FOR VESSEL _____ FOR TERMINAL

PRINT NAME (S) : _____ _____

NOTE: DO NOT ENTER THE TANK(S) if this TANK SAFE ATMOSPHERE STATEMENT is not signed and contact your supervisor for further instructions.

Copyright SGS-OG&C 1995 - Rev Oct 2003 Services rendered according to published General Terms and Conditions

CHECKED DATE 3/23/09

SGS

Inspection Report (LOADING)

Subject : CCL 7
Product : SPENT CAUSTIC
Client ref.: TBD

Date : 3/30/2009
Location : Lake Charles, La / CITGO PETROLEUM
Client : CES ENVIRONMENTAL SERVICES

Our ref.: 135919

Summary of Figures

		Bbls @ 60°F	Gallons @ 60°F	Long Tons	Metric Tonnes	Pounds
Shore Measurements						
Total Shore figures delivered	GSV	6,873.48	288,686.16			
Average API Gravity @ 60°F						
Shoretanks no(s):	TANK 182, TANK 182					
Vessel's Measurements						
Vessel's figures before loading (OBQ)	Free Water	0.00				
Vessel's figures before loading (OBQ)	Liquid	778.88				
Vessel's figures before loading (OBQ)	Non Liquid	0.00				
Vessel's figures before loading (OBQ)	Total	778.88	32,712.96			
Vessel's figures TCV on board after loading		7,915.21	332,438.82			
Vessel's figures TCV loaded		7,136.33	299,725.86			
Vessel's figures Free Water loaded		0.00	0.00			
Vessel's figures GSV loaded		7,136.33	299,725.86			

Cargo stowage Cargo tanks no(s): CCL 7[1C, 2C, 3C]

Samples

SHORE TANK - 2X1 QUART RUNNING FROM EACH SHORE TANK

BARGES - 2X1 QUART RUNNING PER CARGO TANK

Quality

NONE REQUESTED

CTION
TION

PLED
WITH MORE PRODUCT

als Services
ON SULPHUR, LA 70663 t((337) 625-1455) f((337) 625-1721) www.sgs.com

Member of the SGS Group (Societe Générale de Surveillance)

SGS

0645	S/T 182 GAUGED CLOSED
1540	INSPECTOR NOTIFIED
1640	INSPECTOR ARRIVED
1700	S/T 182 GAUGED OPEN
1935	RESUMED LOADING
1950	INSPECTOR NOTIFIED
2050	INSPECTOR ARRIVED
2130	COMPLETED LOADING
2155	CARGO HOSE DISCONNECTED
2215	S/T 182 GAUGED CLOSED
2225	COMMENCED FINAL INSPECTION
2250	COMPLETED FINAL INSPECTION

BRETT DAIGLE
for SGS Oil, Gas & Chemicals Services
3/31/2009

Shore volume calculated in accordance with:
Vessel volume calculated in accordance with: ASTM D 1250-04
Procedures as per applicable MPMS Chapter 3.1a, 7, 8.1 or 8.2, 12.1 or 12.2, 17.1, 17.2, 17.4.

Disclaimer

This document is issued by the Company under its General Conditions of Service accessible at http://www.sgs.com/terms_and_conditions.htm. The Client's attention is drawn to the limitation of liability, indemnification and jurisdiction issues defined therein.

Any other holder of this document is advised that information contained hereon reflects the Company's findings at the time of its intervention only and within the limits of Client's instructions, if any. The Company's sole responsibility is to its Client and this document does not exonerate parties to a transaction from exercising all their rights and obligations under the transaction documents. Any unauthorized alteration, forgery or falsification of the content or appearance of this document is unlawful and offenders may be prosecuted to the fullest extent of the law.
FIRCC REV January 2007

F-3A

PORT / TERMINAL: Lake Charles, La / Citgo PETROLEUM	OFFICE: LAKE CHARLES, LA TEL: (337) 625-1455
VESSEL: CCL 7 VOY #:	INSPECTOR(S): T. MC DONALD
DATE: 3/30/2009	SGS FILE: 135919
CARGO: Spent Caustic	CLIENT: CES Environmental REF: TBD

SGS

VOYAGE ANALYSIS REPORT

Oil Gas & Chemicals Services Division.

☑ LOADING ☐ V-V TRANSFER ☐ DISCHARGE ☐ SUMMARY	Type of Voyage	C/P DATE

Load Port/Terminal/Berth	ARRIVED	SAILED	Discharge Port/Terminal/Berth	ARRIVED	SAILED
L.C./ CITGO/ C-SLIP	3/29/2009	3/31/2009			

VOLUME UNITS	SUPPLIER	RECEIVER	VCF SHORE LOAD	VCF SHORE DISCH	VCF VESSEL LOAD	VCF VESSEL DISCH
☑ BBLS ☐ GALS ☐ M³ ☐ L	CITGO	CES				

DESCRIPTION	API	TCV	FW	GSV	S&W	NSV	Reference
I. COMPARISON OF SHORE QUANTITIES IN CUSTODY TRANSFER							
Bill of Lading 1.		6873.48	0.00	6873.48			(1)
Outturn 2.							(2)
Diff. 3.							(3)=(2) - (1)
Diff. % 4.							(4) = (3) / (1) x 100
Recalc. B/L 5.	(a)		Recalculate if B/L and O/T use different tables.				(5) (a) Vol. Diff.

II. VESSEL/SHORE QUANTITIES AT ( ) LOAD PORT(S)							
Vessel Sailing	A.	7915.21	0.00	7915.21	LIQUID	NON-LIQUID	(A)
OBQ (All)	B.	778.88	0.00	778.88	778.88	0.00	(B)
Loaded	C.	7136.33	0.00	7136.33			(C)=(A) - (B)
Difference	D.	262.85	0.00				(D)=(C)-[(1) or (5)]
Difference %	E.	3.82%					(E)=(D)/[(1)or(5)]x100
Load Vessel Ratio	F.	1.0382					(F)=(C)/[(1)or(5)]
Load VEF	G.	0.00000					(G)
Theoretical Shore	H.	0.00					(H)=(C) / (G)
Theoretical Shore Diff.	I.	-6873.48					(I)=(H) - [(1) or (5)]
Theoretical Shore Diff. %	J.	-100.00%					(J)=(I)/[(1) or (5)]x100

II. VESSEL/SHORE QUANTITIES AT ( ) DISCHARGE PORT(S)							
Vessel Arrival	K.				LIQUID	NON-LIQUID	(K)
ROB (All)	L.						(L)
Discharged	M.						(M) = (K) - (L)
Difference	N.						(N) = (2) - (M)
Difference %	O.						(O) = (N) / (2) x 100
Discharge Vessel Ratio	P.						(P) = (M) / (2)
Discharge VEF	Q.						(Q)
Theoretical Shore	R.						(R) = (M) / (Q)
Theoretical Shore Diff.	S.						(S) = (2) - (R)
Theoretical Shore Diff. %	T.						(T) = (S) / (2) x 100

III. VESSEL'S COMPARISON OF LOADING AND DISCHARGE PORT(S) VCF TABLE MUST BE CONSISTENT							
Transit Difference	U.						(U) = (K) - (A)
Difference %	V.				LIQUID	NON-LIQUID	(V) = (U) / (A) x 100
OBQ/ROB Difference	W.						(W) = (L) - (B)

ADJ TCV DIFF : TCV Difference (3) - OBQ (B) + ROB (L) (Quantity) / 0.00	S&W at Load Port : [S&W(1)/GSV(1)]X100	S&W at Disch Port : [S&W(2)/GSV(2)]X100

Comments :

Prepared by : TIM MC DONALD	Title : INSPECTOR	Company : SGS	Date Completed : 3/31/2009

Copyright SGS-OG&C June 1997 - Rev Oct 2003

Services rendered according to published General Terms and Conditions

CHECKED DATE 3/31/09

F-1

PORT / TERMINAL: Lake Charles, La / Citgo PETROLEUM		OFFICE LAKE CHARLES, LA	TEL (337) 625-1455
VESSEL CCL 7	VOY #	INSPECTOR(S): T. MC DONALD	
DATE 3/30/2009		SGS FILE 135919	
CARGO Spent Caustic		CLIENT CES Environmental	REF TBD

SGS

SHORE QUANTITY SUMMARY

Oil Gas & Chemicals Services Division.

☑ AT LOADING ☐ AT TRANSFER ☐ AT DISCHARGE ☑ SHORE TANK (STATIC) ☐ METER (DYNAMIC)

CUSTODY TRANSFER SAMPLE

☐ API @ 60°F : ☐ R.D. 60°F/60°F ☐ Density Lbs/Gal @

S&W % VOL:

SOURCE OF ANALYTICAL DATA:

	UNITS	TANK 182	TANK 182			
TOTAL CALCULATED VOLUME	BBLS	6288.89	584.59			
FREE WATER	BBLS	0.00	0.00			
GROSS STANDARD VOLUME	BBLS	6288.89	584.59			
S & W VOLUME	BBLS					
(NET) STANDARD VOLUME	BBLS					
WCF TABLE (t)						
GROSS STANDARD WEIGHT	LBS					
S & W WEIGHT	LBS					
(NET) STANDARD WEIGHT	LBS					

	UNITS			SHORELINE	TOTAL DELIVERED
TOTAL CALCULATED VOLUME	BBLS				6873.48
FREE WATER	BBLS				0.00
GROSS STANDARD VOLUME	BBLS				6873.48
S & W VOLUME	BBLS				
(NET) STANDARD VOLUME	BBLS				
					☑ GSV ☐ NSV ☐ SV @
GROSS STANDARD WEIGHT	LBS				
S & W WEIGHT	LBS				
(NET) STANDARD WEIGHT	LBS				

STOWAGE O/B VESSEL: 1-3C

B/L DATE:

REMARKS	QUANTITY CONFIRMED	QUANTITY CHANGES	YES	NO	IF YES STATE REASON
with _____	of _____				
with _____	of _____				
Date _____	Time _____				

CHECKED DATE 3/31/09

Copyright SGS-OG&C June 1997 - Rev Oct 2003

Services rendered according to published General Terms and Conditions

F-2 Page 1 of 1

PORT / TERMINAL: Lake Charles, La / Citgo PETROLEUM	OFFICE: LAKE CHARLES, LA TEL: (337) 625-1455
VESSEL: CCL 7 VOY #:	INSPECTOR(S): T. MC DONALD
DATE: 3/30/2009	SGS FILE: 135919
CARGO: Spent Caustic	CLIENT: CES Environmental REF: TBD

SGS

VESSEL QUANTITY SUMMARY

Oil Gas & Chemicals Services Division.

☑ AT LOADING ☐ AT TRANSFER ☐ AT DISCHARGE | ☐ CRUDE OIL ☑ PRODUCTS

☐ API @ 60°F : ☐ R.D. 60°F/60°F ☐ Density Lbs/Gal @

S&W % VOL:

SOURCE OF ANALYTICAL DATA:

	VOLUME		WCF (t 8)	WEIGHT		
	BBLS	U.S. GALS		POUNDS	LONG TONS	METRIC TONS (AIR)
VESSEL'S QUANTITIES	V.E.F. CORRECTED : ☐ YES ☑ NO VEF:					
TOTAL CALCULATED VOL	7915.21	332438.82				
FREE WATER	0.00	0.00				
GROSS STANDARD VOLUME	7915.21	332438.82				
S & W VOLUME						
(NET) STANDARD VOLUME						

☑ OBQ ☐ ROB

LIQUID MATERIAL	778.88	32712.96				
NON-LIQUID MATERIAL	0.00	0.00				
FREE WATER	0.00	0.00				
TOTAL	778.88	32712.96				

☑ LOADED QUANTITIES ☐ DISCHARGED QUANTITIES

TOTAL CALCULATED VOL	7136.33	299725.86				
FREE WATER	0.00	0.00				
GROSS STANDARD VOLUME	7136.33	299725.86				
S & W VOLUME						
(NET) STANDARD VOLUME						

ARE SLOPS INCLUDED IN CALCULATIONS ☐ YES ☑ NO ☐ NO SLOPS ON BOARD

STOWAGE O/B VESSEL: 1-3C

REMARKS:

CHECKED DATE 30 3/30/09

Copyright SGS-OG&C 1995 - Rev Oct 2003 Services rendered according to published General Terms and Conditions

F-4

PORT / TERMINAL: Lake Charles, La / Citgo PETROLEUM	OFFICE: LAKE CHARLES, LA TEL: (337) 625-1455
VESSEL: CCL 7 VOY #:	INSPECTOR(S): T. MC DONALD
DATE: 3/30/2009	SGS FILE: 135919
CARGO: Spent Caustic	CLIENT: CITGO PETROLEUM REF: TBD

SGS

TIME LOG

Oil Gas & Chemicals Services Division.

☑ AT LOADING ☐ AT TRANSFER ☐ AT DISCHARGE

YEAR 2009 / MONTH JAN FEB MAR APR MAY JUN JUL AUG SEP OCT NOV DEC

Date	Hour	
3/29	10:30	BARGE ARRIVED
3/29	10:40	BARGE DOCKED
3/29	11:30	CARGO HOSE CONNECTED
3/29	14:30	INSPECTOR NOTIFIED
3/29	15:15	INSPECTOR ARRIVED
3/29	15:20	COMMENCED PRE-DECK INSPECTION
3/29	15:35	COMPLETED PRE-DECK INSPECTION
3/29	16:00	COMMENCED LOADING
3/29	16:00	S/T 182 GAUGED OPEN AND SAMPLED
3/30	05:45	DOWN, WAITING TO FILL S/T 182 WITH MORE PRODUCT
3/30	06:00	INSPECTOR NOTIFIED
3/30	06:30	INSPECTOR ARRIVED
3/30	06:45	S/T 182 GAUGED CLOSED
3/30	15:40	INSPECTOR NOTIFIED
3/30	16:40	INSPECTOR ARRIVED
3/30	17:00	S/T 182 GAUGED OPEN
3/30	19:35	RESUMED LOADING
3/30	19:50	INSPECTOR NOTIFIED
3/30	20:50	INSPECTOR ARRIVED
3/30	21:30	COMPLETED LOADING
3/30	21:55	CARGO HOSE DISCONNECTED
3/30	22:15	S/T 182 GAUGED CLOSED
3/30	22:25	COMMENCED FINAL INSPECTION
3/30	22:50	COMPLETED FINAL INSPECTION

DELAYS AND STOPPAGES :

TIMES MARKED * ARE SUBMITTED TO US. TIME LOG PAGE 1 OF 1

Copyright SGS-OG&C June 1997 - Rev Oct 2003 Services rendered according to published General Terms and Conditions

CHECKED DATE 3/30/09

F-10 Page 1 of 2

PORT / TERMINAL: Lake Charles, La / Citgo		OFFICE LAKE CHARLES	TEL (337) 625-1455
VESSEL CCL 7	VOY #	INSPECTOR(S): T. MC DONALD	SGS FILE 135919
CARGO SPENT CAUSTIC		CLIENT CES Environmental	REF TBD

SGS

SHORE TANK MEASUREMENTS (STATIC)

☑ AT LOADING ☐ AT TRANSFER ☐ AT DISCHARGE Oil Gas & Chemicals Services Division.

SHORETANK # 182 REF HEIGHT : GAUGE UNITS ☑ FT - IN ☐ FT ☐ MM ☐ OTHER :

OPEN DATE : 3/29/2009 TIME : 16:00 CLOSE DATE : 3/30/2009 TIME : 6:45

OBS. REF. HEIGHT	§ INNAGE	¤WATER INNAGE	OBS. REF. HEIGHT	§ INNAGE	¤WATER INNAGE
29-2-0/0	26-8-1/4	NIL	9-8-0/0	7-2-1/4	NIL

§ MEASUREMENTS TAKEN IN ACCORDANCE WITH : INNAGE: API MPMS 3.1A.9.2

¤ FREE WATER DETERMINED IN ACCORDANCE WITH : API MPMS 3.1A.10.1

TEMPERATURES TAKEN IN ACCORDANCE WITH : API MPMS 7.6.4

^ VOLUME CALCULATED IN ACCORDANCE WITH :

PROD TEMP	71.2 x 0.875 =	62.3000	PROD TEMP	71.2 x 0.875 =	62.3000
(+) AIR TEMP	x 0.125 =		(+) AIR TEMP	x 0.125 =	
TANK SHELLTEMPERATURE:	=	62	TANK SHELL TEMPERATURE	=	62

ROOF CORRECTION INFO - STANDARD API:

CRITICAL ZONE RANGE FROM TO ROOF LEG ☐ HIGH ☐ LOW

	OPEN	CLOSE
AVG INN IN CRITICAL ZONE	☐ YES ☑ NO	☐ YES ☑ NO
SIDEGAUGE/ATG	26-10-0/0 / 27-5-7/8	7-0-0/0 / 7-7-9/16
TEMPERATURES °F	# ☑ PROBE ☐ MERCURY	# ☑ PROBE ☐ MERCURY
* ACTION TAKEN :	☑ U 71.2 ☑ M 71.2 ☑ L 71.2	☑ U 71.2 ☐ M ☐ L
	☐ M	☐ M
	☐ OTHER*	☐ OTHER*
SIDETEMP/REMOTE	-	-
PROBE WAS CHECKED PRIOR TO USE	☑ YES ☐ NO ☐ NOT USED	
SAMPLING	☐ U ☐ M ☐ L	☐ U ☐ M ☐ L
* ACTION TAKEN :	☐ T ☐ B ☑ R 2QT	☐ T ☐ B ☐ R
	☐ OTHER*	☐ OTHER*
AT ULLAGES :		
CALDATE:	Ref TSh Temp : 60	OP TEMP :

	OPEN	CLOSE
INSPECTOR:	T. MC DONALD	T. MC DONALD
WITNESS:		
API @ 60°F		
SOURCE		
AMBIENT AIR TEMP		
TEMP OF TANK SHELL	62	62
AVG TEMP (0.1°F)	71.0	71.0
AVG INNAGE	26-8-1/4	7-2-1/4
AVG WATER INNAGE	NIL	NIL
VOLUME UNITS ☐ BBLS ☐ M³ ☐ OTHER :		
TABLE VOLUME **	8564.80	2275.91
FREE WATER	0.00	0.00
OBSERVED VOLUME	8564.80	2275.91
TANK SHELL CORR.	1.00000	1.00000
OBSERVED VOLUME	8564.80	2275.91
ROOF CORRECTION	0.00	0.00
GROSS OBSERVED VOL.	8564.80	2275.91
^VCF TABLE : (t)	1.00000	1.00000
GROSS STANDARD VOL.	8564.80	2275.91
DIFFERENCE	6288.89	
CUSTODY TRANSFER SAMPLE:		
API @ 60°F		
S & W % VOL.		
S & W VOLUME		
NET STANDARD VOLUME		
WCF TABLE : (t)		
GROSS STANDARD WT.		
NET STANDARD WEIGHT		
WEIGHT UNITS ☐ LT ☐ MT ☐ LBS ☐ OTHER :		
** IS TABLE VOLUME IN ☐ BBLS ☐ M³ ☐ OTHER :		

CHECKED DATE 3/31/09

Copyright SGS-OG&C 2001.- Rev April 2005

Services rendered according to published General Terms and Conditions

F-10

Page ___ of ___

PORT / TERMINAL: Lake Charles, La / Citgo		OFFICE LAKE CHARLES	TEL (337) 625-1455
VESSEL CCL 7	VOY #	INSPECTOR(S): T. MC DONALD	SGS FILE 135919
CARGO SPENT CAUSTIC		CLIENT CES Environmental	REF TBD

SGS

SHORE TANK MEASUREMENTS (STATIC)

☑ AT LOADING ☐ AT TRANSFER ☐ AT DISCHARGE

Oil Gas & Chemicals Services Division.

SHORETANK # 182 REF HEIGHT : GAUGE UNITS ☑ FT - IN ☐ FT ☐ MM ☐ OTHER :

OPEN DATE : 3/30/2009 TIME : 17:00 CLOSE DATE : TIME :

OBS. REF. HEIGHT	§ INNAGE	¤ WATER INNAGE	OBS. REF. HEIGHT	§ INNAGE	¤ WATER INNAGE
20-10-0/0	18-4-0/0	NIL	19-0-1/8	16-6-1/4	NIL

§ MEASUREMENTS TAKEN IN ACCORDANCE WITH : INNAGE: API MPMS 3.1A.9.2

¤ FREE WATER DETERMINED IN ACCORDANCE WITH : API MPMS 3.1A.10.1

TEMPERATURES TAKEN IN ACCORDANCE WITH : API MPMS 7.6.4

^ VOLUME CALCULATED IN ACCORDANCE WITH : ASTM D 1250-04

PROD TEMP	72.2 x 0.875 =	63.1750	PROD TEMP	72.2 x 0.875 =	63.1750
(+) AIR TEMP	x 0.125 =		(+) AIR TEMP	x 0.125 =	
TANK SHELLTEMPERATURE:	=	63	TANK SHELL TEMPERATURE	=	63

ROOF CORRECTION INFO - STANDARD API:

CRITICAL ZONE RANGE FROM TO ROOF LEG ☐ HIGH ☐ LOW

	OPEN	CLOSE
AVG INN IN CRITICAL ZONE	☐ YES ☑ NO	☐ YES ☑ NO
SIDEGAUGE/ATG	18-6-3/4 / 19-2-5/8	16-4-0/0 / 16-11-9/16
TEMPERATURES °F	# ☑ PROBE ☐ MERCURY	# ☑ PROBE ☐ MERCURY
* ACTION TAKEN :	☑ U 72.2 ☑ M 72.2 ☑ L 72.2	☑ U 72.2 ☑ M 72.2 ☑ L 72.2
	☐ M	☐ M
	☐ OTHER*	☐ OTHER*
SIDETEMP/REMOTE	-	-
PROBE WAS CHECKED PRIOR TO USE	☑ YES ☐ NO ☐ NOT USED	
SAMPLING	☐ U ☐ M ☐ L	☐ U ☐ M ☐ L
* ACTION TAKEN :	☐ T ☐ B ☐ R	☐ T ☐ B ☐ R
	☐ OTHER*	☐ OTHER*
AT ULLAGES :		
	Ref TSh Temp : 60	OP TEMP :

	OPEN	CLOSE
INSPECTOR:	T. MC DONALD	T. MC DONALD
WITNESS:		
API @ 60°F/ DENS. @ 15°		
SOURCE		
AMBIENT AIR TEMP		
TEMP OF TANK SHELL	63	63
AVG TEMP (0.1°F)	72.2	72.2
AVG INNAGE	18-4-0/0	16-6-1/4
AVG WATER INNAGE	NIL	NIL
VOLUME UNITS ☑ BBLS ☐ M³ ☐ OTHER :		
TABLE VOLUME **	5870.18	5285.59
FREE WATER	0.00	0.00
OBSERVED VOLUME	5870.18	5285.59
TANK SHELL CORR.	1.00000	1.00000
OBSERVED VOLUME	5870.18	5285.59
ROOF CORRECTION	0.00	0.00
GROSS OBSERVED VOL.	5870.18	5285.59
^VCF TABLE : (t)	1.00000	1.00000
GROSS STANDARD VOL.	5870.18	5285.59
DIFFERENCE	584.59	
CUSTODY TRANSFER SAMPLE:		
API @ 60°F		
S & W % VOL.		
S & W VOLUME		
NET STANDARD VOLUME		
WCF TABLE : (t)		
GROSS STANDARD WT.		
NET STANDARD WEIGHT		
WEIGHT UNITS ☐ LT ☐ MT ☐ LBS ☐ OTHER :		
** IS TABLE VOLUME IN ☐ BBLS ☐ M³ ☐ OTHER :		

Copyright SGS-OG&C 2001 - Rev April 2005

Services rendered according to published General Terms and Conditions

CHECKED
DATE 30 3/31/09

F-15

PORT / TERMINAL: Lake Charles, La / Citgo PETROLEUM		OFFICE: LAKE CHARLES, LA	TEL: (337) 625-1455
VESSEL: CCL 7	VOY #:	INSPECTOR(S): T. MC DONALD	SGS FILE: 135919
DATE: 3/30/2009 CARGO: Spent Caustic		CLIENT: CES Environmental	REF: TBD

SGS

VESSEL MEASUREMENT SYSTEM

☑ OPEN ☐ CLOSE / RESTRICTED

☐ ARRIVAL ☑ DEPARTURE

Oil Gas & Chemicals Services Division.

☑ AT LOADING ☐ AT TRANSHIPMENT ☐ AT DISCHARGE | ☑ CARGO TANKS ☐ BALLAST TANKS ☐ NON/OTHER CARGO

UNITS: ☑ FT-IN ☐ FT ☐ MM ☐ OTHER: | UNITS: ☑ BBLS ☐ U.S. GALS ☐ M³ ☐ OTHER:

TANK #	REFERENCE HEIGHT	OBSERVED REFERENCE HEIGHT	¤ ULLAGE	WATER INN	TEMPERATURES ºF § PROBE	AVG. TEMP	CORRECTED MEASURE	TOTAL OBSERVED VOLUME	FREE WATER	GROSS OBSERVED VOLUME	^ V.C.F. (t)	GROSS STANDARD VOLUME	*
1C	15-7-0/0	15-7-0/0	5-0-1/2	NIL	71.1	71.1	10-6-1/2	2729.38	0.00	2729.38	1.00000	2729.38	
2C	15-7-0/0	15-7-0/0	5-3-1/4	NIL	71.2	71.2	10-3-3/4	2698.57	0.00	2698.57	1.00000	2698.57	
3C	15-7-0/0	15-7-0/0	6-1-0/0	NIL	71.1	71.1	9-6-0/0	2487.26	0.00	2487.26	1.00000	2487.26	
							TOTALS	7915.21	0.00	7915.21		7915.21	

PROBE WAS CHECKED PRIOR TO USE ☑ YES ☐ NO ☐ NOT USED

GAUGE LOCATION: ☐ STANDPIPE ☑ G.H. on Expansion Trunk

OTHER:

* GAUGE POSITION: C = Center of tank F = Forward of Center A = Aft of Center

SAMPLES DRAWN: 2X1QT PER TANK

CORRECTED MEASURE: w = Wedge corrected, t = Trim corrected

API @ 60ºF SOURCE:

S & W - VOL %: SOURCE:

S & W - VOL: WCF TABLE: (t)

NET STANDARD VOLUME	
GROSS STANDARD WEIGHT	
NET STANDARD WEIGHT	
TOTAL CALC. VOL. DEPARTURE	7915.21

BALLAST TANKS PERMANENT ☑ YES IF ☐ NO (SEE F-15 BALLAST TANKS)

SEASUCTION SEAL #'S:

DRAFT: FWD (P) 9-3 AFT (P) 9-6 LIST: º (P) / (S)

(S) 9-3 (S) 9-6

SEA CONDITION: CALM IN PORT

VESSEL'S STAFF	TIM MC DONALD INSPECTOR

REMARKS:

^ VOLUME CALCULATED IN ACCORDANCE WITH	ASTM D 1250-04
¤ LIQUID LEVEL GAUGES IN ACCORDANCE WITH	API MPMS 17.2.5.2
§ TEMPERATURE DETERMINATION IN ACCORDANCE WITH	API MPMS 17.2.5.3

Services rendered according to published General Terms and Conditions

CHECKED

DATE BD 3/31/09

F-16

Page 1 of 1

PORT / TERMINAL: Lake Charles, La / Citgo PETROLEUM		OFFICE: LAKE CHARLES, LA	TEL: (337) 625-1455
VESSEL: CCL 7	VOY #:	INSPECTOR(S): T. MC DONALD	SGS FILE: 135919
DATE: 3/30/2009 CARGO: Spent Caustic		CLIENT: CES Environmental	REF: TBD

SGS

☑ **OBQ** ☐ **ROB MEASUREMENT**

NOTE: DO NOT USE V.C.F. IF TEMPERATURE IS NOT TAKEN

Oil Gas & Chemicals Services Division.

UNITS: ☑ FT-IN ☐ FT ☐ MM ☐ OTHER: | UNITS: ☑ BBLS ☐ U.S. GALS ☐ M³ ☐ OTHER:

TANK #	REFERENCE HEIGHT	OBSERVED REFERENCE HEIGHT	*	OBSERVED ULLAGE	FREE WATER INNAGE	NON-LIQUID INNAGE	AVG. TEMP	CORRECTED MEASURE	TOTAL OBSERVED VOLUME	^ V.C.F. (t)	FREE WATER VOLUME	NON-LIQUID VOLUME	LIQUID VOLUME
1C	15-7-0/0	15-7-0/0		13-1-0/0	NIL	NIL	60	2-6-0/0	674.19	1.00000	0.00	0.00	674.19
2C	15-7-0/0	15-7-0/0		15-4-1/2	NIL	NIL	60	0-3-1/2	104.69	1.00000	0.00	0.00	104.69
3C	15-7-0/0	15-7-0/0		0-0-0/0	NIL	NIL	60	0-0-0/0	0.00		0.00	0.00	0.00
								TOTALS	778.88		0.00	0.00	778.88

^ VOLUME CALCULATED IN ACCORDANCE WITH ASTM D 1250-04

d = dip, u = Ullage; corrected measure, w = Wedge corrected, t = Trim corrected

GAUGE LOCATION: ☐ STANDPIPE ☑ G.H. on Expansion trunk ☐ OTHER:

* GAUGE POSITION: C = Center of tank F = Forward of Center A = Aft of Center

On behalf of our client(s) we would like to bring to your attention that in our opinion:

Bbls of LIQUID MATERIAL

Bbls of NON-LIQUID MATERIAL

remains on board your vessel. To the extent we are aware of contractual relationships, this material belongs to our client(s) and should be pumped ashore. In case you are unable to do so please indicate your reasons below. In any event, we have to advise our client(s) of the above and reserve his right to seek compensation for the undelivered amount. Statements with regards to flowability and similiar advisory services express personal opinions without responsibility for SGS.

OBQ SAMPLED ☐ YES ☑ NO IF NO REASON

OBQ TESTED ☐ YES ☑ NO IF NO REASON

ROB SAMPLED ☐ YES ☑ NO IF NO REASON

DRAFT: FWD (P) 4-1 AFT (P) 1-6 LIST: º (P) / (S)

(S) 4-1 (S) 1-6

VESSEL'S STAFF	TIM MC DONALD	SEA CONDITION: CALM IN PORT
	INSPECTOR	

CHECKED
DATE
BO 3/31/09

Copyright SGS-OG&C 1997 - Rev April 2005

Services rendered according to published General Terms and Conditions

SGS

Inspection Report (LOADING)

Subject :	CCL 7	Date :	4/12/2009	Our ref.:	137178
Product :	SPENT CAUSTIC	Location :	Lake Charles, LA / CITGO		
Client ref.:	TBD	Client :	CES ENVIRONMENTAL SERVICES		

Summary of Figures

		Bbls @ 60°F	Gallons @ 60°F	Long Tons	Metric Tonnes	Pounds
Shore Measurements		7,736.80	324,945.60			
Total Shore figures delivered	GSV					
Average API Gravity @ 60°F						
Shoretanks no(s):	TANK 182					
Vessel's Measurements						
Vessel's figures before loading (OBQ)	Liquid	136.95				
Vessel's figures before loading (OBQ)	Non Liquid	0.00				
Vessel's figures before loading (OBQ)	Total	136.95	5,751.90			
Vessel's figures TCV on board after loading		7,990.07	335,582.94			
Vessel's figures TCV loaded		7,853.12	329,831.04			
Vessel's figures Free Water loaded		0.00	0.00			
Vessel's figures GSV loaded		7,853.12	329,831.04			

Cargo stowage Cargo tanks no(s): CCL 7[1C, 2C, 3C]

Samples

SHORE TANK - 2X1 QUART RUNNING FROM EACH SHORE TANK
BARGE - 2X1 QUART RUNNING PER CARGO TANK

Quality

NONE REQUESTED

Time Log

4/9/2009	0815	VESSEL ARRIVED
	0830	VESSEL DOCKED
	1300	INSPECTOR NOTIFIED
	1405	HOSE ON
	1455	INSPECTOR ARRIVED
	1530	SHORE TANK 182 GAUGED, TEMPERATURED AND SAMPLED OPEN
	1600	COMMENCED PRE LOAD DECK INSPECTION
	1615	COMPLETED PRE LOAD DECK INSPECTION
	1650	COMMENCED LOADING
	1750	TERMINAL SUSPENDED LOAD
	1830	CARGO HOSE DISCONNECTED
	1845	VESSEL SAILED
4/10/2009	0915	VESSEL ARRIVED BACK AT DOCK

SGS

	0935	VESSEL DOCKED
	1200	CARGO HOSE CONNECTED
	1330	COMMENCED LOADING
4/11/2009	0400	INSPECTOR NOTIFIED
	0445	INSPECTOR ARRIVED
	0620	TERMINAL SUSPENDED LOADING
	0745	SHORE TANK 182 GAUGED AND TEMPERATURED CLOSED FOR TANK TRANSFER
	0800	COMMENCED GRAVITATING FROM ST 185 TO 182
	1620	COMPLETED GRAVITATING FROM 185 TO 182
	1630	INSPECTOR ARRIVED
	1700	SHORE TANK 182 GAUGED, TEMPERATURED and SAMPLED OPEN
	2235	RESUMED LOADING
4/12/2009	0200	COMPLETED LOADING
	0230	CARGO HOSE OFF
	0300	COMMENCED POST LOAD DECK INSPECTION
	0320	COMPLETED POST LOAD DECK INSPECTION
	0320	COMMENCED CALCULATIONS
	0325	COMPLETED CALCULATIONS AND PLACED DOCUMENTS ON VESSEL
	0330	SHORE TANK 182 GAUGED AND TEMPERATURED CLOSED
	0350	INSPECTOR DEPARTED

Additional events, Stoppages and Delays

4/9/2009	1750	TERMINAL SUSPENDED LOAD
4/11/2009	0620	TERMINAL SUSPENDED LOADING

BRETT DAIGLE
for SGS Oil, Gas & Chemicals Services
4/14/2009

Shore volume calculated in accordance with: ASTM D 1250-04
Vessel volume calculated in accordance with: ASTM D 1250-04
Procedures as per applicable MPMS Chapter 3.1a, 7, 8.1 or 8.2, 12.1 or 12.2, 17.1, 17.2, 17.4.

Disclaimer

This document is issued by the Company under its General Conditions of Service accessible at http://www.sgs.com/terms_and_conditions.htm. The Client's attention is drawn to the limitation of liability, indemnification and jurisdiction issues defined therein.

Any other holder of this document is advised that information contained hereon reflects the Company's findings at the time of its intervention only and within the limits of Client's instructions, if any. The Company's sole responsibility is to its Client and this document does not exonerate parties to a transaction from exercising all their rights and obligations under the transaction documents. Any unauthorized alteration, forgery or falsification of the content or appearance of this document is unlawful and offenders may be prosecuted to the fullest extent of the law.
FIRCC REV. January 2007

F-3A

PORT / TERMINAL: Lake Charles, LA / CITGO	OFFICE: Lake Charles, LA TEL: 337-625-1455
VESSEL: CCL 7 VOY #:	INSPECTOR(S): JOE BUSBY
DATE: 4/9/2009	SGS FILE: 137178
CARGO: SPENT CAUSTIC	CLIENT: CES ENVIROMENTAL REF: TBD

SGS

VOYAGE ANALYSIS REPORT

Oil Gas & Chemicals Services Division.

☑ LOADING ☐ V-V TRANSFER ☐ DISCHARGE ☐ SUMMARY	Type of Voyage	C/P DATE
	Simple	

Load Port/Terminal/Berth	ARRIVED	SAILED	Discharge Port/Terminal/Berth	ARRIVED	SAILED
LAKE CHARLES/ CITGO	4/9/2009	4/12/2009			

VOLUME UNITS	SUPPLIER	RECEIVER	VCF SHORE LOAD	VCF SHORE DISCH	VCF VESSEL LOAD	VCF VESSEL DISCH
☐ BBLS ☐ GALS ☐ M³ ☐ L	CITGO	CES				

DESCRIPTION		API/DENSITY	TCV	FW	GSV	S&W	NSV	Reference
I. COMPARISON OF SHORE QUANTITIES IN CUSTODY TRANSFER								
Bill of Lading	1.		7736.80	0.00	7736.80			(1)
Outturn	2.							(2)
Diff.	3.							(3)=(2) - (1)
Diff. %	4.							(4) = (3) / (1) x 100
Recalc. B/L	5.	(a)		Recalculate if B/L and O/T use different tables.				(5) (a) Vol. Diff.
II. VESSEL/SHORE QUANTITIES AT ( ) LOAD PORT(S)								
Vessel Sailing	A.		7990.07	0.00	7990.07	LIQUID	NON-LIQUID	(A)
OBQ (All)	B.		136.95	0.00	136.95	136.95	0.00	(B)
Loaded	C.		7853.12	0.00	7853.12			(C)=(A) - (B)
Difference	D.		116.32	0.00	116.32			(D)=(C)-[(1) or (5)]
Difference %	E.		1.50%		1.50%			(E)=(D)/[(1)or(5)]x100
Load Vessel Ratio	F.		1.0150					(F)=(C)/[(1)or(5)]
Load VEF	G.							(G)
Theoretical Shore	H.							(H)=(C) / (G)
Theoretical Shore Diff.	I.		-7736.80					(I)=(H) - [(1) or (5)]
Theoretical Shore Diff. %	J.		-100.00%					(J)=(I)/[(1) or (5)]x100
II. VESSEL/SHORE QUANTITIES AT ( ) DISCHARGE PORT(S)								
Vessel Arrival	K.					LIQUID	NON-LIQUID	(K)
ROB (All)	L.							(L)
Discharged	M.							(M) = (K) - (L)
Difference	N.							(N) = (2) - (M)
Difference %	O.							(O) = (N) / (2) x 100
Discharge Vessel Ratio	P.							(P) = (M) / (2)
Discharge VEF	Q.							(Q)
Theoretical Shore	R.							(R) = (M) / (Q)
Theoretical Shore Diff.	S.							(S) = (2) - (R)
Theoretical Shore Diff. %	T.							(T) = (S) / (2) x 100
III. VESSEL/'S COMPARISON OF LOADING AND DISCHARGE PORT(S) VCF TABLE MUST BE CONSISTENT								
Transit Difference	U.							(U) = (K) - (A)
Difference %	V.					LIQUID	NON-LIQUID	(V) = (U) / (A) x 100
OBQ/ROB Difference	W.							(W) = (L) - (B)

ADJ TCV DIFF : TCV Difference (3) - OBQ (B) + ROB (L) (Quantity) / 0.00	[S&W(1)/GSV(1)]X100 S&W at Load Port :	[S&W(2)/GSV(2)]X100 S&W at Disch Port :

Comments :

Prepared by :	Title :	Company :	Date Completed :
JOE BUSBY	INSPECTOR	SGS	4/12/2009

Copyright SGS-OG&C June 1997 - Rev Oct 2003

Services rendered according to published General Terms and Conditions

CHECKED BY 4/14/09 DATE

F-1

PORT / TERMINAL: Lake Charles, LA / CITGO	OFFICE Lake Charles, LA TEL 337-625-1455
VESSEL CCL 7 VOY #	INSPECTOR(S): JOE BUSBY
DATE 4/9/2009	SGS FILE 137178
CARGO SPENT CAUSTIC	CLIENT CES ENVIROMENTAL REF TBD

SGS

SHORE QUANTITY SUMMARY

Oil Gas & Chemicals Services Division.

☑ AT LOADING ☐ AT TRANSFER ☐ AT DISCHARGE	☑ SHORE TANK (STATIC) ☐ METER (DYNAMIC)
CUSTODY TRANSFER SAMPLE	
☐ API @ 60ºF : ☐ R.D. 60ºF/60ºF ☐ Density Lbs/Gal @	
S&W % VOL:	
SOURCE OF ANALYTICAL DATA:	

	UNITS	TANK 182 (1st)	TANK 182 (2nd)			
TOTAL CALCULATED VOLUME		6514.04	1222.76			
FREE WATER		0.00	0.00			
GROSS STANDARD VOLUME		6514.04	1222.76			
S & W VOLUME						
(NET) STANDARD VOLUME						
WCF TABLE (!)						
GROSS STANDARD WEIGHT						
S & W WEIGHT						
(NET) STANDARD WEIGHT						

	UNITS			SHORELINE	TOTAL DELIVERED
TOTAL CALCULATED VOLUME					7736.80
FREE WATER					0.00
GROSS STANDARD VOLUME					7736.80
S & W VOLUME					
(NET) STANDARD VOLUME					
					☑ GSV ☐ NSV ☐ SV @
GROSS STANDARD WEIGHT					
S & W WEIGHT					
(NET) STANDARD WEIGHT					

STOWAGE O/B VESSEL:	
	B/L DATE:
REMARKS QUANTITY CONFIRMED with N/A of N/A with of Date 4/14/2009 Time 9:35	QUANTITY CHANGES ✓ YES NO IF YES STATE REASON QUANTITIES BASED ON TOV FIGURES ONLY

CHECKED DATE 4/14/09 BD

Copyright SGS-OG&C June 1997 - Rev Oct 2003

Services rendered according to published General Terms and Conditions

F-2

PORT / TERMINAL: Lake Charles, LA / CITGO	OFFICE: Lake Charles, LA TEL: 337-625-1455
VESSEL: CCL 7 VOY #:	INSPECTOR(S): JOE BUSBY
DATE: 4/9/2009	SGS FILE: 137178
CARGO: SPENT CAUSTIC	CLIENT: CES ENVIROMENTAL REF: TBD

SGS

VESSEL QUANTITY SUMMARY

Oil Gas & Chemicals Services Division.

☑ AT LOADING ☐ AT TRANSFER ☐ AT DISCHARGE ☐ CRUDE OIL ☑ PRODUCTS

☐ API @ 60°F : ☐ R.D. 60°F/60°F ☐ Density Lbs/Gal @

S&W % VOL:

SOURCE OF ANALYTICAL DATA:

	VOLUME		WCF (t)	WEIGHT		
	BBLS	U.S. GALS		POUNDS	LONG TONS	METRIC TONS (AIR)
VESSEL'S QUANTITIES	V.E.F. CORRECTED : ☐ YES ☐ NO VEF:					
TOTAL CALCULATED VOL	7990.07	335582.94				
FREE WATER	0.00	0.00				
GROSS STANDARD VOLUME	7990.07	335582.94				
S & W VOLUME						
(NET) STANDARD VOLUME						

☑ OBQ ☐ ROB

LIQUID MATERIAL	136.95	5751.90				
NON-LIQUID MATERIAL	0.00	0.00				
FREE WATER	0.00	0.00				
TOTAL	136.95	5751.90				

☐ LOADED QUANTITIES ☐ DISCHARGED QUANTITIES

TOTAL CALCULATED VOL	7853.12	329831.04				
FREE WATER	0.00	0.00				
GROSS STANDARD VOLUME	7853.12	329831.04				
S & W VOLUME						
(NET) STANDARD VOLUME						

ARE SLOPS INCLUDED IN CALCULATIONS ☐ YES ☐ NO ☑ NO SLOPS ON BOARD

STOWAGE O/B VESSEL:

REMARKS:

CHECKED BD 4/14/05
DATE

Copyright SGS-OG&C 1995 - Rev Oct 2003 Services rendered according to published General Terms and Conditions

F-4

PORT / TERMINAL: Lake Charles, LA / CITGO	OFFICE: Lake Charles, LA TEL: 337-625-1455
VESSEL: CCL 7 VOY #:	INSPECTOR(S): JOE BUSBY
DATE: 4/9/2009	SGS FILE: 137178
CARGO: SPENT CAUSTIC	CLIENT: CES ENVIROMENTAL REF: TBD

SGS

TIME LOG

Oil Gas & Chemicals Services Division.

☑ AT LOADING ☐ AT TRANSFER ☐ AT DISCHARGE

YEAR 2009 / MONTH JAN FEB MAR APR MAY JUN JUL AUG SEP OCT NOV DEC

Date	Hour	
4/9	08:15	VESSEL ARRIVED
4/9	08:30	VESSEL DOCKED
4/9	13:00	INSPECTOR NOTIFIED
4/9	14:05	HOSE ON
4/9	14:55	INSPECTOR ARRIVED
4/9	15:30	SHORE TANK 182 GAUGED, TEMPERATURED AND SAMPLED OPEN
4/9	16:00	COMMENCED PRE LOAD DECK INSPECTION
4/9	16:15	COMPLETED PRE LOAD DECK INSPECTION
4/9	16:50	COMMENCED LOADING
4/9	17:50	TERMINAL SUSPENDED LOAD
4/9	18:30	CARGO HOSE DISCONNECTED
4/9	18:45	VESSEL SAILED
4/10	09:15	VESSEL ARRIVED BACK AT DOCK
4/10	09:35	VESSEL DOCKED
4/10	12:00	CARGO HOSE CONNECTED
4/10	13:30	COMMENCED LOADING
4/11	04:00	INSPECTOR NOTIFIED
4/11	04:45	INSPECTOR ARRIVED
4/11	06:20	TERMINAL SUSPENDED LOADING
4/11	07:45	SHORE TANK 182 GAUGED AND TEMPERATURED CLOSED FOR TANK TRANSFER
4/11	08:00	COMMENCED GRAVITATING FROM ST 185 TO 182
4/11	16:20	COMPLETED GRAVITATING FROM 185 TO 182
4/11	16:30	INSPECTOR ARRIVED
4/11	17:00	SHORE TANK 182 GAUGED, TEMPERATURED and SAMPLED OPEN
4/11	22:35	RESUMED LOADING
4/12	02:00	COMPLETED LOADING
4/12	02:30	CARGO HOSE OFF
4/12	03:00	COMMENCED POST LOAD DECK INSPECTION
4/12	03:20	COMPLETED POST LOAD DECK INSPECTION
4/12	03:20	COMMENCED CALCULATIONS
4/12	03:25	COMPLETED CALCULATIONS AND PLACED DOCUMENTS ON VESSEL
4/12	03:30	SHORE TANK 182 GAUGED AND TEMPERATURED CLOSED
4/12	03:50	INSPECTOR DEPARTED
DELAYS AND STOPPAGES :		
4/9	17:50	TERMINAL SUSPENDED LOAD
4/11	06:20	TERMINAL SUSPENDED LOADING

TIMES MARKED * ARE SUBMITTED TO US. TIME LOG PAGE 1 OF 1

CHECKED DATE 4/14/09 JD

Copyright SGS-OG&C June 1997 - Rev Oct 2003 Services rendered according to published General Terms and Conditions

PORT / TERMINAL: Lake Charles, LA / CITGO		OFFICE Lake Charles, LA	TEL 337-625-1455
VESSEL CCL 7	VOY #	INSPECTOR(S): JOE BUSBY	SGS FILE 137178
CARGO SPENT CAUSTIC		CLIENT CES ENVIROMENTAL	REF TBD

SGS

SHORE TANK MEASUREMENTS (STATIC)

☑ AT LOADING ☐ AT TRANSFER ☐ AT DISCHARGE Oil Gas & Chemicals Services Division.

SHORETANK # 182 REF HEIGHT : FLOATING GAUGE UNITS ☑ FT - IN ☐ FT ☐ MM ☐ OTHER :

OPEN DATE : 4/9/2009 TIME : 15:30 CLOSE DATE : 4/11/2009 TIME : 7:45

OBS. REF. HEIGHT	§ INNAGE	¤ WATER INNAGE	OBS. REF. HEIGHT	§ INNAGE	¤ WATER INNAGE
29-11-8	27-5-10	0-0-0	9-9-1/8	7-3-1/4	0-0-0

§ MEASUREMENTS TAKEN IN ACCORDANCE WITH : INNAGE: API MPMS 3.1A.9.2

¤ FREE WATER DETERMINED IN ACCORDANCE WITH : API MPMS 3.1A.10.1

TEMPERATURES TAKEN IN ACCORDANCE WITH : API MPMS 7.6.4

^ VOLUME CALCULATED IN ACCORDANCE WITH : ASTM D 1250-04

PROD TEMP	70.4 x 0.875 =	61.6000	PROD TEMP	69.0 x 0.875 =	60.3750
(+) AIR TEMP	72.0 x 0.125 =	9.0000	(+) AIR TEMP	72.0 x 0.125 =	9.0000
TANK SHELL TEMPERATURE:	=	71	TANK SHELL TEMPERATURE	=	69

ROOF CORRECTION INFO - STANDARD API:

CRITICAL ZONE RANGE FROM TO ROOF LEG ☐ HIGH ☐ LOW

	OPEN	CLOSE
AVG INN/ULL IN CRITICAL ZONE	☐ YES ☑ NO	☐ YES ☑ NO
SIDEGAUGE/ATG	26-9-7 27-5-3	6-7-1/2 7-3-4
TEMPERATURES °F	# ☑ PROBE ☐ MERCURY	# ☑ PROBE ☐ MERCURY
* ACTION TAKEN :	☐ U ☐ M 70.4 ☐ L	☐ U ☑ M 69 ☐ L
	☐ M	☐ M
	☐ OTHER*	☐ OTHER*
SIDETEMP/REMOTE		
PROBE WAS CHECKED PRIOR TO USE	☑ YES ☐ NO ☐ NOT USED	
SAMPLING	☑ U ☑ M ☑ L	☐ U ☐ M ☐ L
* ACTION TAKEN :	☐ T ☐ B ☐ R	☐ T ☐ B ☐ R
	☐ OTHER*	☐ OTHER*
AT ULLAGES :		
	Ref TSh Temp : 60	OP TEMP :

	OPEN	CLOSE
INSPECTOR:	JOE BUSBY	JOE BUSBY
WITNESS:		
API @ 60°F		
SOURCE		
AMBIENT AIR TEMP	72.0	72.0
TEMP OF TANK SHELL	71	69
AVG TEMP (0.5°F)	70.5	69.0
AVG INNAGE	27-5-10	7-3-1/4
AVG WATER INNAGE	0-0-0	0-0-0
VOLUME UNITS ☑ BBLS ☐ M³ ☐ OTHER :		
TABLE VOLUME **	8816.80	2302.76
FREE WATER	0.00	0.00
OBSERVED VOLUME	8816.80	2302.76
TANK SHELL CORR.	1.00000	1.00000
OBSERVED VOLUME	8816.80	2302.76
ROOF CORRECTION	0.00	0.00
GROSS OBSERVED VOL.	8816.80	2302.76
^VCF TABLE : (t 6B)	1.00000	1.00000
GROSS STANDARD VOL.	8816.80	2302.76
DIFFERENCE	6514.04	
CUSTODY TRANSFER SAMPLE:		
API @ 60°F		
S & W % VOL.		
S & W VOLUME		
NET STANDARD VOLUME		
WCF TABLE : (t)		
GROSS STANDARD WT.		
NET STANDARD WEIGHT		
WEIGHT UNITS ☐ LT ☐ MT ☑ LBS ☐ OTHER :		
** IS TABLE VOLUME IN ☑ BBLS ☐ M³ ☐ OTHER :		

CHECKED
DATE
SD 4/14/09

Copyright SGS-OG&C 2001 - Rev April 2005

Services rendered according to published General Terms and Conditions

MAY-20-2009 08:48 CES ENVIROMENTAL 7137488664 P.061

EPAPA010000808

PORT / TERMINAL: Lake Charles, LA / CITGO		OFFICE Lake Charles, LA	TEL 337-625-1455
VESSEL CCL 7	VOY #	INSPECTOR(S): JOE BUSBY	SGS FILE 137178
CARGO SPENT CAUSTIC		CLIENT CES ENVIROMENTAL	REF TBD

SGS

SHORE TANK MEASUREMENTS (STATIC)

☑ AT LOADING ☐ AT TRANSFER ☐ AT DISCHARGE Oil Gas & Chemicals Services Division.

SHORETANK # 182 REF HEIGHT : FLOATING GAUGE UNITS ☑ FT - IN ☐ FT ☐ MM ☐ OTHER :

OPEN DATE : 4/11/2009 TIME : 17:00 CLOSE DATE : 4/12/2009 TIME : 3:30

OBS. REF. HEIGHT	§ INNAGE	¤ WATER INNAGE	OBS. REF. HEIGHT	§ INNAGE	¤ WATER INNAGE
17-10-7/16	15-4-9	0-0-0	14-0-15	11-7-1	0-0-0

§ MEASUREMENTS TAKEN IN ACCORDANCE WITH : INNAGE: API MPMS 3.1A.9.2

¤ FREE WATER DETERMINED IN ACCORDANCE WITH : API MPMS 3.1A.10.1

TEMPERATURES TAKEN IN ACCORDANCE WITH : API MPMS 7.6.4

^ VOLUME CALCULATED IN ACCORDANCE WITH : ASTM D 1250-04

PROD TEMP	75.0 x 0.875 =	65.6250	PROD TEMP	74.0 x 0.875 =	64.7500
(+) AIR TEMP	72.0 x 0.125 =	9.0000	(+) AIR TEMP	72.0 x 0.125 =	9.0000
TANK SHELLTEMPERATURE:	=	75	TANK SHELL TEMPERATURE	=	74

ROOF CORRECTION INFO - STANDARD API:

CRITICAL ZONE RANGE FROM TO ROOF LEG ☐ HIGH ☐ LOW

	OPEN	CLOSE
AVG INN/ULL IN CRITICAL ZONE	☐ YES ☑ NO	☐ YES ☑ NO
SIDEGAUGE/ATG	14-8-3/8 15-4-9	10-10-7/8 11-7-1
TEMPERATURES °F	# ☑ PROBE ☐ MERCURY	# ☑ PROBE ☐ MERCURY
* ACTION TAKEN :	☐ U ☑ M 75 ☐ L	☐ U ☑ M 74 ☐ L
	☐ M	☐ M
	☐ OTHER*	☐ OTHER*
SIDETEMP/REMOTE		
PROBE WAS CHECKED PRIOR TO USE	☑ YES ☐ NO ☐ NOT USED	
SAMPLING	☐ U ☐ M ☐ L	☐ U ☐ M ☐ L
* ACTION TAKEN :	☐ T ☐ B ☐ R	☐ T ☐ B ☐ R
	☐ OTHER*	☐ OTHER*
AT ULLAGES :		
	Ref TSh Temp : 60	OP TEMP :

	OPEN	CLOSE
INSPECTOR:	JOE BUSBY	JOE BUSBY
WITNESS:		
API @ 60°F		
SOURCE		
AMBIENT AIR TEMP	72.0	72.0
TEMP OF TANK SHELL	75	74
AVG TEMP (0.5°F)	75.0	74.0
AVG INNAGE	15-4-9	11-7-1
AVG WATER INNAGE	0-0-0	0-0-0
VOLUME UNITS ☑ BBLS ☐ M³ ☐ OTHER :		
TABLE VOLUME **	4917.71	3694.95
FREE WATER	0.00	0.00
OBSERVED VOLUME	4917.71	3694.95
TANK SHELL CORR.	1.00000	1.00000
OBSERVED VOLUME	4917.71	3694.95
ROOF CORRECTION	0.00	0.00
GROSS OBSERVED VOL.	4917.71	3694.95
^VCF TABLE : (t 6B)	1.00000	1.00000
GROSS STANDARD VOL.	4917.71	3694.95
DIFFERENCE	1222.76	
CUSTODY TRANSFER SAMPLE:		
API @ 60°F		
S & W % VOL.		
S & W VOLUME		
NET STANDARD VOLUME		
WCF TABLE : (t)		
GROSS STANDARD WT.		
NET STANDARD WEIGHT		
WEIGHT UNITS ☐ LT ☐ MT ☐ LBS ☐ OTHER :		
** IS TABLE VOLUME IN ☐ BBLS ☐ M³ ☐ OTHER :		

CHECKED BY BD DATE 4/14/09

Services rendered according to published General Terms and Conditions

MAY-20-2009 08:49 CES ENVIROMENTAL 7137488664 P.062

EPAPA010000809

F-15

Page 1 of 1

PORT / TERMINAL: Lake Charles, LA / CITGO		OFFICE: Lake Charles, LA	TEL: 337-625-1455
VESSEL: CCL 7	VOY #:	INSPECTOR(S): JOE BUSBY	SGS FILE: 137178
DATE: 4/9/2009 CARGO: SPENT CAUSTIC		CLIENT: CES ENVIROMENTAL	REF: TBD

SGS

VESSEL MEASUREMENT SYSTEM

☑ OPEN ☐ CLOSE / RESTRICTED

☐ ARRIVAL ☑ DEPARTURE

Oil Gas & Chemicals Services Division.

☑ AT LOADING ☐ AT TRANSHIPMENT ☐ AT DISCHARGE | ☑ CARGO TANKS ☐ BALLAST TANKS ☐ NON/OTHER CARGO

UNITS : ☑ FT-IN ☐ FT ☐ MM ☐ OTHER : | UNITS : ☑ BBLS ☐ U.S. GALS ☐ M³ ☐ OTHER :

TANK #	REFERENCE HEIGHT	OBSERVED REFERENCE HEIGHT	¤ INNAGE	WATER INN	TEMPERATURES °F § PROBE	AVG. TEMP	CORRECTED MEASURE	TOTAL OBSERVED VOLUME	FREE WATER	GROSS OBSERVED VOLUME	^ V.C.F. (t 8B)	GROSS STANDARD VOLUME	*
1C	15-7	15-7	10-6-3/4	0-0-0	72.1	72.1	10-6-3/4	2734.09	0.00	2734.09	1.00000	2734.09	C
2C	15-7	15-7	10-5	0-0-0	72.0	72.0	10-5	2725.55	0.00	2725.55	1.00000	2725.55	C
3C	15-7	15-7	9-8	0-0-0	72.5	72.5	9-8	2530.43	0.00	2530.43	1.00000	2530.43	C
							TOTALS	7990.07	0.00	7990.07		7990.07	

PROBE WAS CHECKED PRIOR TO USE ☑ YES ☐ NO ☐ NOT USED

GAUGE LOCATION : ☐ STANDPIPE ☑ G.H. on Expansion Trunk ☐ OTHER :

* GAUGE POSITION: C = Center of tank F = Forward of Center A = Aft of Center

SAMPLES DRAWN : 2 QT RUNNING PER TANK

CORRECTED MEASURE : w = Wedge corrected, t = Trim corrected

API @ 60F / DENSITY @ 15C	SOURCE :
S & W - VOL % :	SOURCE :
S & W - VOL :	WCF TABLE : (t)
NET STANDARD VOLUME	
GROSS STANDARD WEIGHT	
NET STANDARD WEIGHT	
TOTAL CALC. VOL. DEPARTURE	

BALLAST TANKS PERMANENT ☑ YES IF ☐ NO (SEE F-15 BALLAST TANKS)

SEASUCTION SEAL #'S :

DRAFT: FWD (P) 9-6 AFT (P) 9-6 LIST : º (P) / (S)

(S) 9-6 (S) 9-6

SEA CONDITION: CALM IN PORT

REMARKS :

^ VOLUME CALCULATED IN ACCORDANCE WITH	ASTM D 1250-04
¤ LIQUID LEVEL GAUGES IN ACCORDANCE WITH	API MPMS 17.2.5.2
§TEMPERATURE DETERMINATION IN ACCORDANCE WITH	API MPMS 17.2.5.3

CHECKED VESSEL'S STAFF	JOE BUSBY INSPECTOR

DATE BD 4/14/05

Copyright SGS-OG&C 2001 - Rev April 2005

Services rendered according to published General Terms and Conditions

F-16

Page 1 of 1

PORT / TERMINAL: Lake Charles, LA / CITGO		OFFICE: Lake Charles, LA	TEL: 337-625-1455
VESSEL: CCL 7	VOY #:	INSPECTOR(S): JOE BUSBY	SGS FILE: 137178
DATE: 4/9/2009 CARGO: SPENT CAUSTIC		CLIENT: CES ENVIROMENTAL	REF: TBD

SGS

☑ **OBQ** ☐ **ROB MEASUREMENT**

NOTE: DO NOT USE V.C.F. IF TEMPERATURE IS NOT TAKEN

Oil Gas & Chemicals Services Division.

UNITS: ☑ FT-IN ☐ FT ☐ MM ☐ OTHER: | UNITS: ☑ BBLS ☐ U.S. GALS ☐ M³ ☐ OTHER:

TANK #	REFERENCE HEIGHT	OBSERVED REFERENCE HEIGHT	*	OBSERVED INNAGE	FREE WATER INNAGE	NON-LIQUID INNAGE	AVG. TEMP	CORRECTED MEASURE	TOTAL OBSERVED VOLUME	^ V.C.F. (t 6B)	FREE WATER VOLUME	NON-LIQUID VOLUME	LIQUID VOLUME
1C	15-7	15-7	C	0-0-0	0-0-0	0-0-0	60	0-0-0	0.00	1.00000	0.00	0.00	0.00
2C	15-7	15-7	C	0-0-0	0-0-0	0-0-0	60	0-0-0	0.00	1.00000	0.00	0.00	0.00
3C	15-7	15-7	C	0-6-0	0-0-0	0-0-0	60	0-6-0	136.95	1.00000	0.00	0.00	136.95
								TOTALS	136.95		0.00	0.00	136.95

^ VOLUME CALCULATED IN ACCORDANCE WITH ASTM D 1250-04

On behalf of our client(s) we would like to bring to your attention that in our opinion:

Bbls of LIQUID MATERIAL

Bbls of NON-LIQUID MATERIAL

remains on board your vessel. To the extent we are aware of contractual relationships, this material belongs to our client(s) and should be pumped ashore. In case you are unable to do so please indicate your reasons below. In any event, we have to advise our client(s) of the above and reserve his right to seek compensation for the undelivered amount. Statements with regards to flowability and similiar advisory services express personal opinions without responsibility for SGS.

d = dip, u = Ullage; corrected measure, w = Wedge corrected, t = Trim corrected

GAUGE LOCATION: ☐ STANDPIPE ☑ G.H. on Expansion trunk ☐ OTHER:

* GAUGE POSITION: C = Center of tank F = Forward of Center A = Aft of Center

OBQ SAMPLED ☐ YES ☑ NO IF NO REASON

OBQ TESTED ☐ YES ☑ NO IF NO REASON

ROB SAMPLED ☐ YES ☑ NO IF NO REASON

DRAFT: FWD (P) 2-6 AFT (P) 2-6 LIST: ° (P) / (S)

(S) 2-6 (S) 2-6

SEA CONDITION: CALM IN PORT

VESSEL'S STAFF	INSPECTOR
CHECKED	JOE BUSBY
DATE	

JD 4/14/09

Copyright SGS-OG&C 1997 - Rev April 2005

Services rendered according to published General Terms and Conditions

F-7

PORT / TERMINAL: Lake Charles, LA / CITGO	OFFICE: Lake Charles, LA TEL: 337-625-1455
VESSEL: CCL 7 VOY #:	INSPECTOR(S): JOE BUSBY
DATE: 4/9/2009	SGS FILE: 137178
CARGO: SPENT CAUSTIC	CLIENT: CES ENVIROMENTAL REF: TBD

SGS

INFORMATION FOR CLEANLINESS INSPECTION

Oil Gas & Chemicals Services Division.

☑ AT LOADING ☐ AT TRANSFER ☐ AT DISCHARGE ☐ SHORE ☑ VESSEL

THE INFORMATION ON THIS LIRIS F-7 WILL BE USED TO COMPLETE LIRIS F-9 WAS SUBMITTED TO US BY THE PERSON(S) INDICATED BELOW

WE CONSULTED FOR TANK INSPECTION ON (DATE) 4/9/2009 (TIME) 16:15 WITH:

☐ VESSEL'S STAFF ☑ BARGE OPERATOR ☐ TERMINAL REPRESENTATIVE ☐ CHARTERER

☐ OTHER (SPECIFY):

PLEASE PRINT NAME(S)

TANK MATERIAL:

TANK #:	1C	2C	3C		
MATERIAL	MILD STEEL	MILD STEEL	MILD STEEL		
COATING NAME	N/A	N/A	N/A		
APPARENT CONDITION *	ACCEPTABLE	ACCEPTABLE	ACCEPTABLE		
TANK #:					
MATERIAL					
COATING NAME					
APPARENT CONDITION *					

COATING WAS CHECKED AGAINST ☐ MANUFACTURERS ☐ OTHER (SPECIFY) CHECKLIST

IF NOT CHECKED, REASO

* SELECT: e.g. % MISSING % DISCOLORED %PEELING ACCEPTABLE etc. (ALL PERCENTAGES ARE APPROXIMATIONS)

OUR INSPECTION FOR F-9 COVERS THE CLEANLINESS OF THE COATINGS, NOT IT'S SUITABILITY IN REGARD TO CARGO CONTAMINATION.

PREVIOUS CARGOES:

TANK#	THIRD LAST	SECOND LAST	LAST	COMPATIBLE
1C	SPENT CAUSTIC	SPENT CAUSTIC	SPENT CAUSTIC	☑ YES ☐ NO
2C	SPENT CAUSTIC	SPENT CAUSTIC	SPENT CAUSTIC	☑ YES ☐ NO
3C				☐ YES ☐ NO
				☐ YES ☐ NO
				☐ YES ☐ NO
				☐ YES ☐ NO
				☐ YES ☐ NO
				☐ YES ☐ NO

LINES - PUMPS:

NAME	MATERIAL	LAST USED FOR	PRESSED WITH INERT GAS/AIR
			☐ YES ☐ NO PRESSURE
			☐ YES ☐ NO PRESSURE
			☐ YES ☐ NO PRESSURE
			☐ YES ☐ NO PRESSURE
			☐ YES ☐ NO PRESSURE

THE CLEANLINESS CONDITION OF THE CARGO PUMPS AND LINES CANNOT BE ASCERTAINED BY VISUAL EXAMINATION. IT IS RECOMMENDED TO TEST "LINE" SAMPLES PRIOR TO COMMENCING THE TRANSFER AND "FIRST-IN" SAMPLES AT THE START OF THE TRANSFER TO MINIMIZE CARGO CONTAMINATION.

VESSEL REPRESENTATIVE

JOE BUSBY
INSPECTOR

CHECKED DATE 4/14/05 BO

Copyright SGS-OG&C 1995 - Rev Oct 2003

Services rendered according to published General Terms and Conditions

F-9

PORT / TERMINAL: Lake Charles, LA / CITGO	OFFICE: Lake Charles, LA TEL: 337-625-1455
VESSEL: CCL 7 VOY #:	INSPECTOR(S): JOE BUSBY
DATE: 4/9/2009	SGS FILE: 137178
CARGO: SPENT CAUSTIC	CLIENT: CES ENVIROMENTAL REF: TBD

SGS

TANK CLEANLINESS INSPECTION

Oil Gas & Chemicals Services Division.

☑ AT LOADING ☐ AT TRANSFER ☐ AT DISCHARGE

☐ AS INSPECTION ONLY ☐ AS PRE-INSPECTION ☑ WITH CUSTODY TRANSFER

USE A SEPARATE FORM F-9 PER INSPECTION

THIS IS THE ☑ FIRST ☐ SECOND ☐ THIRD _____ TH INSPECTION

TANK(S): 1-3 C

BASED ON SUBMITTED INFORMATION (SEE LIRIS F-7) AND :

☐ VISUAL CHECK FOR RESIDUES FROM DECKLEVEL (SEE LIRIS F-15 OR F-20)
☑ MEASURING OF RESIDUES FROM DECK LEVEL (SEE LIRIS F-16)
☐ PHYSICAL ENTRY (TANK SAFE ATMOSPHERE STATEMENT BELOW MUST BE COMPLETED PRIOR TO ENTRY)

AND ☐ VISUAL INSPECTION
AND ☐ WALLWASHING (ANALYTICAL REPORT ON FILE)
AND ☐ TESTING OF HEATING COILS

☑ WERE ACCEPTED FOR CLEANLINESS TO CARRY A CARGO OF SPENT CAUSTIC

☐ WERE REJECTED FOR CLEANLINESS TO CARRY A CARGO OF _____

REASON : _____

☐ SHIP'S STAFF AND/OR ☐ SGS SUPERVISOR AND/OR ☐ CLIENT NOTIFIED ON BY

☑ INSPECTION COMPLETED AT 16:15 HRS ON THE 4/9/2009

☐ TANK(S) SUBJECT TO A FINAL INSPECTION AT LOADING BERTH IN CASE OF PRE-INSPECTION

SIGNATURES : _____ FOR VESSEL _____ FOR TERMINAL JOE BUSBY INSPECTOR

* IS THIS TANK ACCEPTANCE BASED SOLELY ON SUBMITTED INFORMATION EVALUATION ? ☐ YES ☐ NO

IF YES; ISSUE N.O.A.D. AND INFORM YOUR ☐ SGS SUPERVISOR AND/OR ☐ CLIENT(S) IMMEDIATELY.

TANK SAFE ATMOSPHERE STATEMENT

The undersigned certifies that those tank(s) indicated on line 13 of this page have been cleaned and gas freed as reported on the reverse side of the SGS F-7 and that the tank(s) in question are in all respects safe for entry. The undersigned hereby grants permission for SGS personnel to enter said tanks.

Tank Safe Atmosphere Statement signed _____ hours on _____

SIGNATURES : _____ FOR VESSEL _____ FOR TERMINAL

PRINT NAME (S) : _____ _____

NOTE: DO NOT ENTER THE TANK(S) if this TANK SAFE ATMOSPHERE STATEMENT is not signed and contact your supervisor for further instructions.

Copyright SGS-OG&C 1995 - Rev Oct 2003 Services rendered according to published General Terms and Conditions

CHECKED DATE 4/14/09

40

CFR

PART 261

code of federal regulations

Protection of Environment

40

PARTS 266 TO 299

Revised as of July 1, 1997

EPAPA011000002

code of federal regulations

Protection of Environment

RECEIVED

DEC 3 0 1997

ALBEMARLE CORP.
INFORMATION SERVICES

40

PARTS 266 to 299

Revised as of July 1, 1997

CONTAINING
A CODIFICATION OF DOCUMENTS
OF GENERAL APPLICABILITY
AND FUTURE EFFECT

AS OF JULY 1, 1997

With Ancillaries

Published by
the Office of the Federal Register
National Archives and Records
Administration

as a Special Edition of
the Federal Register

EPAPA011000003

Electronic Code of Federal Regulations
e-CFR™

e-CFR Data is current as of October 10, 2008

Title 40: Protection of Environment

Browse Previous | Browse Next

PART 261—IDENTIFICATION AND LISTING OF HAZARDOUS WASTE

Section Contents

Subpart A—General

§ 261.1 Purpose and scope.
§ 261.2 Definition of solid waste.
§ 261.3 Definition of hazardous waste.
§ 261.4 Exclusions.
§ 261.5 Special requirements for hazardous waste generated by conditionally exempt small quantity generators.
§ 261.6 Requirements for recyclable materials.
§ 261.7 Residues of hazardous waste in empty containers.
§ 261.8 PCB wastes regulated under Toxic Substance Control Act.
§ 261.9 Requirements for Universal Waste.

Subpart B—Criteria for Identifying the Characteristics of Hazardous Waste and for Listing Hazardous Waste

§ 261.10 Criteria for identifying the characteristics of hazardous waste.
§ 261.11 Criteria for listing hazardous waste.

Subpart C—Characteristics of Hazardous Waste

§ 261.20 General.
§ 261.21 Characteristic of ignitability.
§ 261.22 Characteristic of corrosivity.
§ 261.23 Characteristic of reactivity.
§ 261.24 Toxicity characteristic.

Subpart D—Lists of Hazardous Wastes

§ 261.30 General.
§ 261.31 Hazardous wastes from non-specific sources.
§ 261.32 Hazardous wastes from specific sources.
§ 261.33 Discarded commercial chemical products, off-specification species, container residues, and spill residues thereof.
§ 261.35 Deletion of certain hazardous waste codes following equipment cleaning and replacement.

Subpart E—Exclusions/Exemptions

§ 261.38 Comparable/Syngas Fuel Exclusion.
§ 261.39 Conditional Exclusion for Used, Broken Cathode Ray Tubes (CRTs) and Processed CRT Glass Undergoing Recycling.
§ 261.40 Conditional Exclusion for Used, Intact Cathode Ray Tubes (CRTs) Exported for Recycling.
§ 261.41 Notification and Recordkeeping for Used, Intact Cathode Ray Tubes (CRTs) Exported for Reuse.
Appendix I to Part 261—Representative Sampling Methods
Appendix II to Part 261 [Reserved]
Appendix III to Part 261 [Reserved]
Appendix IV to Part 261 [Reserved for Radioactive Waste Test Methods]
Appendix V to Part 261 [Reserved for Infectious Waste Treatment Specifications]
Appendix VI to Part 261 [Reserved for Etiologic Agents]
Appendix VII to Part 261—Basis for Listing Hazardous Waste
Appendix VIII to Part 261—Hazardous Constituents
Appendix IX to Part 261—Wastes Excluded Under §§260.20 and 260.22

Authority: 42 U.S.C. 6905, 6912(a), 6921, 6922, 6924(y) and 6938.

Source: 45 FR 33119, May 19, 1980, unless otherwise noted.

Subpart A—General

top

§ 261.1 Purpose and scope.

top

(a) This part identifies those solid wastes which are subject to regulation as hazardous wastes under parts 262 through 265, 268, and parts 270, 271, and 124 of this chapter and which are subject to the notification requirements of section 3010 of RCRA. In this part:

(1) Subpart A defines the terms "solid waste" and "hazardous waste", identifies those wastes which are excluded from regulation under parts 262 through 266, 268 and 270 and establishes special management requirements for hazardous waste produced by conditionally exempt small quantity generators and hazardous waste which is recycled.

(2) Subpart B sets forth the criteria used by EPA to identify characteristics of hazardous waste and to list particular hazardous wastes.

(3) Subpart C identifies characteristics of hazardous waste.

(4) Subpart D lists particular hazardous wastes.

(b)(1) The definition of solid waste contained in this part applies only to wastes that also are hazardous for purposes of the regulations implementing subtitle C of RCRA. For example, it does not apply to materials (such as non-hazardous scrap, paper, textiles, or rubber) that are not otherwise hazardous wastes and that are recycled.

(2) This part identifies only some of the materials which are solid wastes and hazardous wastes under sections 3007, 3013, and 7003 of RCRA. A material which is not defined as a solid waste in this part, or is not a hazardous waste identified or listed in this part, is still a solid waste and a hazardous waste for

purposes of these sections if:

(i) In the case of sections 3007 and 3013, EPA has reason to believe that the material may be a solid waste within the meaning of section 1004(27) of RCRA and a hazardous waste within the meaning of section 1004(5) of RCRA; or

(ii) In the case of section 7003, the statutory elements are established.

(c) For the purposes of §§261.2 and 261.6:

(1) A "spent material" is any material that has been used and as a result of contamination can no longer serve the purpose for which it was produced without processing;

(2) "Sludge" has the same meaning used in §260.10 of this chapter;

(3) A "by-product" is a material that is not one of the primary products of a production process and is not solely or separately produced by the production process. Examples are process residues such as slags or distillation column bottoms. The term does not include a co-product that is produced for the general public's use and is ordinarily used in the form it is produced by the process.

(4) A material is "reclaimed" if it is processed to recover a usable product, or if it is regenerated. Examples are recovery of lead values from spent batteries and regeneration of spent solvents.

(5) A material is "used or reused" if it is either:

(i) Employed as an ingredient (including use as an intermediate) in an industrial process to make a product (for example, distillation bottoms from one process used as feedstock in another process). However, a material will not satisfy this condition if distinct components of the material are recovered as separate end products (as when metals are recovered from metal-containing secondary materials); or

(ii) Employed in a particular function or application as an effective substitute for a commercial product (for example, spent pickle liquor used as phosphorous precipitant and sludge conditioner in wastewater treatment).

(6) "Scrap metal" is bits and pieces of metal parts (e.g.,) bars, turnings, rods, sheets, wire) or metal pieces that may be combined together with bolts or soldering (e.g., radiators, scrap automobiles, railroad box cars), which when worn or superfluous can be recycled.

(7) A material is "recycled" if it is used, reused, or reclaimed.

(8) A material is "accumulated speculatively" if it is accumulated before being recycled. A material is not accumulated speculatively, however, if the person accumulating it can show that the material is potentially recyclable and has a feasible means of being recycled; and that—during the calendar year (commencing on January 1)—the amount of material that is recycled, or transferred to a different site for recycling, equals at least 75 percent by weight or volume of the amount of that material accumulated at the beginning of the period. In calculating the percentage of turnover, the 75 percent requirement is to be applied to each material of the same type (e.g., slags from a single smelting process) that is recycled in the same way (*i.e.,* from which the same material is recovered or that is used in the same way). Materials accumulating in units that would be exempt from regulation under §261.4(c) are not to be included in making the calculation. (Materials that are already defined as solid wastes also are not to be included in making the calculation.) Materials are no longer in this category once they are removed from accumulation for recycling, however.

(9) "Excluded scrap metal" is processed scrap metal, unprocessed home scrap metal, and unprocessed prompt scrap metal.

(10) "Processed scrap metal" is scrap metal which has been manually or physically altered to either separate it into distinct materials to enhance economic value or to improve the handling of materials. Processed scrap metal includes, but is not limited to scrap metal which has been baled, shredded, sheared, chopped, crushed, flattened, cut, melted, or separated by metal type (i.e., sorted), and, fines,

drosses and related materials which have been agglomerated. (Note: shredded circuit boards being sent for recycling are not considered processed scrap metal. They are covered under the exclusion from the definition of solid waste for shredded circuit boards being recycled (§261.4(a)(13)).

(11) "Home scrap metal" is scrap metal as generated by steel mills, foundries, and refineries such as turnings, cuttings, punchings, and borings.

(12) "Prompt scrap metal" is scrap metal as generated by the metal working/fabrication industries and includes such scrap metal as turnings, cuttings, punchings, and borings. Prompt scrap is also known as industrial or new scrap metal.

[45 FR 33119, May 19, 1980, as amended at 48 FR 14293, Apr. 1, 1983; 50 FR 663, Jan. 4, 1985; 51 FR 10174, Mar. 24, 1986; 51 FR 40636, Nov. 7, 1986; 62 FR 26018, May 12, 1997]

§ 261.2 Definition of solid waste.

top

(a)(1) A *solid waste* is any discarded material that is not excluded by §261.4(a) or that is not excluded by variance granted under §§260.30 and 260.31.

(2) A *discarded material* is any material which is:

(i) *Abandoned,* as explained in paragraph (b) of this section; or

(ii) *Recycled,* as explained in paragraph (c) of this section; or

(iii) Considered *inherently waste-like,* as explained in paragraph (d) of this section; or

(iv) *A military munition* identified as a solid waste in 40 CFR 266.202.

(b) Materials are solid waste if they are *abandoned* by being:

(1) Disposed of; or

(2) Burned or incinerated; or

(3) Accumulated, stored, or treated (but not recycled) before or in lieu of being abandoned by being disposed of, burned, or incinerated.

(c) Materials are solid wastes if they are *recycled* —or accumulated, stored, or treated before recycling— as specified in paragraphs (c)(1) through (4) of this section.

(1) *Used in a manner constituting disposal.* (i) Materials noted with a "*" in Column 1 of Table 1 are solid wastes when they are:

(A) Applied to or placed on the land in a manner that constitutes disposal; or

(B) Used to produce products that are applied to or placed on the land or are otherwise contained in products that are applied to or placed on the land (in which cases the product itself remains a solid waste).

(ii) However, commercial chemical products listed in §261.33 are not solid wastes if they are applied to the land and that is their ordinary manner of use.

(2) *Burning for energy recovery.* (i) Materials noted with a "*" in column 2 of Table 1 are solid wastes when they are:

(A) Burned to recover energy;

(B) Used to produce a fuel or are otherwise contained in fuels (in which cases the fuel itself remains a solid waste).

(ii) However, commercial chemical products listed in §261.33 are not solid wastes if they are themselves fuels.

(3) *Reclaimed.* Materials noted with a "*" in column 3 of Table 1 are solid wastes when reclaimed (except as provided under §261.4(a)(17)). Materials noted with a "—"in column 3 of Table 1 are not solid wastes when reclaimed.

(4) *Accumulated speculatively.* Materials noted with a "*" in column 4 of Table 1 are solid wastes when accumulated speculatively.

Table 1

	Use constituting disposal (§261.2(c)(1))	**Energy recovery/ fuel (§261.2(c)(2))**	**Reclamation (§261.2(c)(3)) (except as provided in 261.4(a)(17) for mineral processing secondary materials)**	**Speculative accumulation (§261.2(c)(4))**
	1	2	3	4
Spent Materials	(*)	(*)	(*)	(*)
Sludges (listed in 40 CFR Part 261.31 or 261.32	(*)	(*)	(*)	(*)
Sludges exhibiting a characteristic of hazardous waste	(*)	(*)	—	(*)
By-products (listed in 40 CFR 261.31 or 261.32)	(*)	(*)	(*)	(*)
By-products exhibiting a characteristic of hazardous waste	(*)	(*)	—	(*)
Commercial chemical products listed	(*)	(*)	—	—

in 40 CFR 261.33				
Scrap metal other than excluded scrap metal (see 261.1(c)(9))	(*)	(*)	(*)	(*)

Note: The terms "spent materials," "sludges," "by-products," and "scrap metal" and "processed scrap metal" are defined in §261.1.

(d) *Inherently waste-like materials.* The following materials are solid wastes when they are recycled in any manner:

(1) Hazardous Waste Nos. F020, F021 (unless used as an ingredient to make a product at the site of generation), F022, F023, F026, and F028.

(2) Secondary materials fed to a halogen acid furnace that exhibit a characteristic of a hazardous waste or are listed as a hazardous waste as defined in subparts C or D of this part, except for brominated material that meets the following criteria:

(i) The material must contain a bromine concentration of at least 45%; and

(ii) The material must contain less than a total of 1% of toxic organic compounds listed in appendix VIII; and

(iii) The material is processed continually on-site in the halogen acid furnace via direct conveyance (hard piping).

(3) The Administrator will use the following criteria to add wastes to that list:

(i)(A) The materials are ordinarily disposed of, burned, or incinerated; or

(B) The materials contain toxic constituents listed in appendix VIII of part 261 and these constituents are not ordinarily found in raw materials or products for which the materials substitute (or are found in raw materials or products in smaller concentrations) and are not used or reused during the recycling process; and

(ii) The material may pose a substantial hazard to human health and the environment when recycled.

(e) *Materials that are not solid waste when recycled.* (1) Materials are not solid wastes when they can be shown to be recycled by being:

(i) Used or reused as ingredients in an industrial process to make a product, provided the materials are not being reclaimed; or

(ii) Used or reused as effective substitutes for commercial products; or

(iii) Returned to the original process from which they are generated, without first being reclaimed or land disposed. The material must be returned as a substitute for feedstock materials. In cases where the original process to which the material is returned is a secondary process, the materials must be managed such that there is no placement on the land. In cases where the materials are generated and reclaimed within the primary mineral processing industry, the conditions of the exclusion found at §261.4 (a)(17) apply rather than this paragraph.

(2) The following materials are solid wastes, even if the recycling involves use, reuse, or return to the

EPAPA011000009

original process (described in paragraphs (e)(1) (i) through (iii) of this section):

(i) Materials used in a manner constituting disposal, or used to produce products that are applied to the land; or

(ii) Materials burned for energy recovery, used to produce a fuel, or contained in fuels; or

(iii) Materials accumulated speculatively; or

(iv) Materials listed in paragraphs (d)(1) and (d)(2) of this section.

(f) *Documentation of claims that materials are not solid wastes or are conditionally exempt from regulation.* Respondents in actions to enforce regulations implementing subtitle C of RCRA who raise a claim that a certain material is not a solid waste, or is conditionally exempt from regulation, must demonstrate that there is a known market or disposition for the material, and that they meet the terms of the exclusion or exemption. In doing so, they must provide appropriate documentation (such as contracts showing that a second person uses the material as an ingredient in a production process) to demonstrate that the material is not a waste, or is exempt from regulation. In addition, owners or operators of facilities claiming that they actually are recycling materials must show that they have the necessary equipment to do so.

[50 FR 664, Jan. 4, 1985, as amended at 50 FR 33542, Aug. 20, 1985; 56 FR 7206, Feb. 21, 1991; 56 FR 32688, July 17, 1991; 56 FR 42512, Aug. 27, 1991; 57 FR 38564, Aug. 25, 1992; 59 FR 48042, Sept. 19, 1994; 62 FR 6651, Feb. 12, 1997; 62 FR 26019, May 12, 1997; 63 FR 28636, May 26, 1998; 64 FR 24513, May 11, 1999; 67 FR 11253, Mar. 13, 2002; 71 FR 40258, July 14, 2006]

§ 261.3 Definition of hazardous waste.

top

(a) A solid waste, as defined in §261.2, is a hazardous waste if:

(1) It is not excluded from regulation as a hazardous waste under §261.4(b); and

(2) It meets any of the following criteria:

(i) It exhibits any of the characteristics of hazardous waste identified in subpart C of this part. However, any mixture of a waste from the extraction, beneficiation, and processing of ores and minerals excluded under §261.4(b)(7) and any other solid waste exhibiting a characteristic of hazardous waste under subpart C is a hazardous waste only if it exhibits a characteristic that would not have been exhibited by the excluded waste alone if such mixture had not occurred, or if it continues to exhibit any of the characteristics exhibited by the non-excluded wastes prior to mixture. Further, for the purposes of applying the Toxicity Characteristic to such mixtures, the mixture is also a hazardous waste if it exceeds the maximum concentration for any contaminant listed in table 1 to §261.24 that would not have been exceeded by the excluded waste alone if the mixture had not occurred or if it continues to exceed the maximum concentration for any contaminant exceeded by the nonexempt waste prior to mixture.

(ii) It is listed in subpart D of this part and has not been excluded from the lists in subpart D of this part under §§260.20 and 260.22 of this chapter.

(iii) [Reserved]

(iv) It is a mixture of solid waste and one or more hazardous wastes listed in subpart D of this part and has not been excluded from paragraph (a)(2) of this section under §§260.20 and 260.22, paragraph (g) of this section, or paragraph (h) of this section; however, the following mixtures of solid wastes and hazardous wastes listed in subpart D of this part are not hazardous wastes (except by application of paragraph (a)(2)(i) or (ii) of this section) if the generator can demonstrate that the mixture consists of wastewater the discharge of which is subject to regulation under either section 402 or section 307(b) of the Clean Water Act (including wastewater at facilities which have eliminated the discharge of

EPAPA011000010

wastewater) and;

(A) One or more of the following spent solvents listed in §261.31—benzene, carbon tetrachloride, tetrachloroethylene, trichloroethylene or the scrubber waters derived-from the combustion of these spent solvents— *Provided,* That the maximum total weekly usage of these solvents (other than the amounts that can be demonstrated not to be discharged to wastewater) divided by the average weekly flow of wastewater into the headworks of the facility's wastewater treatment or pretreatment system does not exceed 1 part per million, OR the total measured concentration of these solvents entering the headworks of the facility's wastewater treatment system (at facilities subject to regulation under the Clean Air Act, as amended, at 40 CFR parts 60, 61, or 63, or at facilities subject to an enforceable limit in a federal operating permit that minimizes fugitive emissions), does not exceed 1 part per million on an average weekly basis. Any facility that uses benzene as a solvent and claims this exemption must use an aerated biological wastewater treatment system and must use only lined surface impoundments or tanks prior to secondary clarification in the wastewater treatment system. Facilities that choose to measure concentration levels must file a copy of their sampling and analysis plan with the Regional Administrator, or State Director, as the context requires, or an authorized representative ("Director" as defined in 40 CFR 270.2). A facility must file a copy of a revised sampling and analysis plan only if the initial plan is rendered inaccurate by changes in the facility's operations. The sampling and analysis plan must include the monitoring point location (headworks), the sampling frequency and methodology, and a list of constituents to be monitored. A facility is eligible for the direct monitoring option once they receive confirmation that the sampling and analysis plan has been received by the Director. The Director may reject the sampling and analysis plan if he/she finds that, the sampling and analysis plan fails to include the above information; or the plan parameters would not enable the facility to calculate the weekly average concentration of these chemicals accurately. If the Director rejects the sampling and analysis plan or if the Director finds that the facility is not following the sampling and analysis plan, the Director shall notify the facility to cease the use of the direct monitoring option until such time as the bases for rejection are corrected; or

(B) One or more of the following spent solvents listed in §261.31-methylene chloride, 1,1,1-trichloroethane, chlorobenzene, o-dichlorobenzene, cresols, cresylic acid, nitrobenzene, toluene, methyl ethyl ketone, carbon disulfide, isobutanol, pyridine, spent chlorofluorocarbon solvents, 2-ethoxyethanol, or the scrubber waters derived-from the combustion of these spent solvents— *Provided* That the maximum total weekly usage of these solvents (other than the amounts that can be demonstrated not to be discharged to wastewater) divided by the average weekly flow of wastewater into the headworks of the facility's wastewater treatment or pretreatment system does not exceed 25 parts per million, OR the total measured concentration of these solvents entering the headworks of the facility's wastewater treatment system (at facilities subject to regulation under the Clean Air Act as amended, at 40 CFR parts 60, 61, or 63, or at facilities subject to an enforceable limit in a federal operating permit that minimizes fugitive emissions), does not exceed 25 parts per million on an average weekly basis. Facilities that choose to measure concentration levels must file a copy of their sampling and analysis plan with the Regional Administrator, or State Director, as the context requires, or an authorized representative ("Director" as defined in 40 CFR 270.2). A facility must file a copy of a revised sampling and analysis plan only if the initial plan is rendered inaccurate by changes in the facility's operations. The sampling and analysis plan must include the monitoring point location (headworks), the sampling frequency and methodology, and a list of constituents to be monitored. A facility is eligible for the direct monitoring option once they receive confirmation that the sampling and analysis plan has been received by the Director. The Director may reject the sampling and analysis plan if he/she finds that, the sampling and analysis plan fails to include the above information; or the plan parameters would not enable the facility to calculate the weekly average concentration of these chemicals accurately. If the Director rejects the sampling and analysis plan or if the Director finds that the facility is not following the sampling and analysis plan, the Director shall notify the facility to cease the use of the direct monitoring option until such time as the bases for rejection are corrected; or

(C) One of the following wastes listed in §261.32, provided that the wastes are discharged to the refinery oil recovery sewer before primary oil/water/solids separation—heat exchanger bundle cleaning sludge from the petroleum refining industry (EPA Hazardous Waste No. K050), crude oil storage tank sediment from petroleum refining operations (EPA Hazardous Waste No. K169), clarified slurry oil tank sediment and/or in-line filter/separation solids from petroleum refining operations (EPA Hazardous Waste No. K170), spent hydrotreating catalyst (EPA Hazardous Waste No. K171), and spent hydrorefining catalyst (EPA Hazardous Waste No. K172); or

(D) A discarded hazardous waste, commercial chemical product, or chemical intermediate listed in §§261.31 through 261.33, arising from *de minimis* losses of these materials. For purposes of this paragraph (a)(2)(iv)(D), *de minimis* losses are inadvertent releases to a wastewater treatment system, including those from normal material handling operations (e.g., spills from the unloading or transfer of

materials from bins or other containers, leaks from pipes, valves or other devices used to transfer materials); minor leaks of process equipment, storage tanks or containers; leaks from well maintained pump packings and seals; sample purgings; relief device discharges; discharges from safety showers and rinsing and cleaning of personal safety equipment; and rinsate from empty containers or from containers that are rendered empty by that rinsing. Any manufacturing facility that claims an exemption for *de minimis* quantities of wastes listed in §§261.31 through 261.32, or any nonmanufacturing facility that claims an exemption for *de minimis* quantities of wastes listed in subpart D of this part must either have eliminated the discharge of wastewaters or have included in its Clean Water Act permit application or submission to its pretreatment control authority the constituents for which each waste was listed (in 40 CFR 261 appendix VII) of this part; and the constituents in the table "Treatment Standards for Hazardous Wastes" in 40 CFR 268.40 for which each waste has a treatment standard (*i.e.* , Land Disposal Restriction constituents). A facility is eligible to claim the exemption once the permit writer or control authority has been notified of possible *de minimis* releases via the Clean Water Act permit application or the pretreatment control authority submission. A copy of the Clean Water permit application or the submission to the pretreatment control authority must be placed in the facility's on-site files; or

(E) Wastewater resulting from laboratory operations containing toxic (T) wastes listed in subpart D of this part, Provided, That the annualized average flow of laboratory wastewater does not exceed one percent of total wastewater flow into the headworks of the facility's wastewater treatment or pre-treatment system or provided the wastes, combined annualized average concentration does not exceed one part per million in the headworks of the facility's wastewater treatment or pre-treatment facility. Toxic (T) wastes used in laboratories that are demonstrated not to be discharged to wastewater are not to be included in this calculation; or

(F) One or more of the following wastes listed in §261.32—wastewaters from the production of carbamates and carbamoyl oximes (EPA Hazardous Waste No. K157)— *Provided* that the maximum weekly usage of formaldehyde, methyl chloride, methylene chloride, and triethylamine (including all amounts that cannot be demonstrated to be reacted in the process, destroyed through treatment, or is recovered, *i.e.* , what is discharged or volatilized) divided by the average weekly flow of process wastewater prior to any dilution into the headworks of the facility's wastewater treatment system does not exceed a total of 5 parts per million by weight OR the total measured concentration of these chemicals entering the headworks of the facility's wastewater treatment system (at facilities subject to regulation under the Clean Air Act as amended, at 40 CFR parts 60, 61, or 63, or at facilities subject to an enforceable limit in a federal operating permit that minimizes fugitive emissions), does not exceed 5 parts per million on an average weekly basis. Facilities that choose to measure concentration levels must file copy of their sampling and analysis plan with the Regional Administrator, or State Director, as the context requires, or an authorized representative ("Director" as defined in 40 CFR 270.2). A facility must file a copy of a revised sampling and analysis plan only if the initial plan is rendered inaccurate by changes in the facility's operations. The sampling and analysis plan must include the monitoring point location (headworks), the sampling frequency and methodology, and a list of constituents to be monitored. A facility is eligible for the direct monitoring option once they receive confirmation that the sampling and analysis plan has been received by the Director. The Director may reject the sampling and analysis plan if he/she finds that, the sampling and analysis plan fails to include the above information; or the plan parameters would not enable the facility to calculate the weekly average concentration of these chemicals accurately. If the Director rejects the sampling and analysis plan or if the Director finds that the facility is not following the sampling and analysis plan, the Director shall notify the facility to cease the use of the direct monitoring option until such time as the bases for rejection are corrected; or

(G) Wastewaters derived-from the treatment of one or more of the following wastes listed in §261.32—organic waste (including heavy ends, still bottoms, light ends, spent solvents, filtrates, and decantates) from the production of carbamates and carbamoyl oximes (EPA Hazardous Waste No. K156).— *Provided,* that the maximum concentration of formaldehyde, methyl chloride, methylene chloride, and triethylamine prior to any dilutions into the headworks of the facility's wastewater treatment system does not exceed a total of 5 milligrams per liter OR the total measured concentration of these chemicals entering the headworks of the facility's wastewater treatment system (at facilities subject to regulation under the Clean Air Act as amended, at 40 CFR parts 60, 61, or 63, or at facilities subject to an enforceable limit in a federal operating permit that minimizes fugitive emissions), does not exceed 5 milligrams per liter on an average weekly basis. Facilities that choose to measure concentration levels must file copy of their sampling and analysis plan with the Regional Administrator, or State Director, as the context requires, or an authorized representative ("Director" as defined in 40 CFR 270.2). A facility must file a copy of a revised sampling and analysis plan only if the initial plan is rendered inaccurate by changes in the facility's operations. The sampling and analysis plan must include the monitoring point location (headworks), the sampling frequency and methodology, and a list of constituents to be monitored. A facility is eligible for the direct monitoring option once they receive confirmation that the

sampling and analysis plan has been received by the Director. The Director may reject the sampling and analysis plan if he/she finds that, the sampling and analysis plan fails to include the above information; or the plan parameters would not enable the facility to calculate the weekly average concentration of these chemicals accurately. If the Director rejects the sampling and analysis plan or if the Director finds that the facility is not following the sampling and analysis plan, the Director shall notify the facility to cease the use of the direct monitoring option until such time as the bases for rejection are corrected.

(v) *Rebuttable presumption for used oil.* Used oil containing more than 1000 ppm total halogens is presumed to be a hazardous waste because it has been mixed with halogenated hazardous waste listed in subpart D of part 261 of this chapter. Persons may rebut this presumption by demonstrating that the used oil does not contain hazardous waste (for example, to show that the used oil does not contain significant concentrations of halogenated hazardous constituents listed in appendix VIII of part 261 of this chapter).

(b) A solid waste which is not excluded from regulation under paragraph (a)(1) of this section becomes a hazardous waste when any of the following events occur:

(1) In the case of a waste listed in subpart D of this part, when the waste first meets the listing description set forth in subpart D of this part.

(2) In the case of a mixture of solid waste and one or more listed hazardous wastes, when a hazardous waste listed in subpart D is first added to the solid waste.

(3) In the case of any other waste (including a waste mixture), when the waste exhibits any of the characteristics identified in subpart C of this part.

(c) Unless and until it meets the criteria of paragraph (d) of this section:

(1) A hazardous waste will remain a hazardous waste.

(2)(i) Except as otherwise provided in paragraph (c)(2)(ii), (g) or (h) of this section, any solid waste generated from the treatment, storage, or disposal of a hazardous waste, including any sludge, spill residue, ash emission control dust, or leachate (but not including precipitation run-off) is a hazardous waste. (However, materials that are reclaimed from solid wastes and that are used beneficially are not solid wastes and hence are not hazardous wastes under this provision unless the reclaimed material is burned for energy recovery or used in a manner constituting disposal.)

(ii) The following solid wastes are not hazardous even though they are generated from the treatment, storage, or disposal of a hazardous waste, unless they exhibit one or more of the characteristics of hazardous waste:

(A) Waste pickle liquor sludge generated by lime stabilization of spent pickle liquor from the iron and steel industry (SIC Codes 331 and 332).

(B) Waste from burning any of the materials exempted from regulation by §261.6(a)(3)(iii) and (iv).

(C)(*1*) Nonwastewater residues, such as slag, resulting from high temperature metals recovery (HTMR) processing of K061, K062 or F006 waste, in units identified as rotary kilns, flame reactors, electric furnaces, plasma arc furnaces, slag reactors, rotary hearth furnace/electric furnace combinations or industrial furnaces (as defined in paragraphs (6), (7), and (13) of the definition for "Industrial furnace" in 40 CFR 260.10), that are disposed in subtitle D units, provided that these residues meet the generic exclusion levels identified in the tables in this paragraph for all constituents, and exhibit no characteristics of hazardous waste. Testing requirements must be incorporated in a facility's waste analysis plan or a generator's self-implementing waste analysis plan; at a minimum, composite samples of residues must be collected and analyzed quarterly and/or when the process or operation generating the waste changes. Persons claiming this exclusion in an enforcement action will have the burden of proving by clear and convincing evidence that the material meets all of the exclusion requirements.

Constituent	Maximum for any single composite sample—TCLP (mg/l)

Generic exclusion levels for K061 and K062 nonwastewater HTMR residues	
Antimony	0.10
Arsenic	0.50
Barium	7.6
Beryllium	0.010
Cadmium	0.050
Chromium (total)	0.33
Lead	0.15
Mercury	0.009
Nickel	1.0
Selenium	0.16
Silver	0.30
Thallium	0.020
Zinc	70
Generic exclusion levels for F006 nonwastewater HTMR residues	
Antimony	0.10
Arsenic	0.50
Barium	7.6
Beryllium	0.010
Cadmium	0.050
Chromium (total)	0.33
Cyanide (total) (mg/kg)	1.8
Lead	0.15
Mercury	0.009
Nickel	1.0
Selenium	0.16
Silver	0.30
Thallium	0.020
Zinc	70

(2) A one-time notification and certification must be placed in the facility's files and sent to the EPA region or authorized state for K061, K062 or F006 HTMR residues that meet the generic exclusion levels for all constituents and do not exhibit any characteristics that are sent to subtitle D units. The notification and certification that is placed in the generators or treaters files must be updated if the process or operation generating the waste changes and/or if the subtitle D unit receiving the waste changes. However, the generator or treater need only notify the EPA region or an authorized state on an annual basis if such changes occur. Such notification and certification should be sent to the EPA region or authorized state by the end of the calendar year, but no later than December 31. The notification must include the following information: The name and address of the subtitle D unit receiving the waste shipments; the EPA Hazardous Waste Number(s) and treatability group(s) at the initial point of generation; and, the treatment standards applicable to the waste at the initial point of generation. The certification must be signed by an authorized representative and must state as follows: "I certify under penalty of law that the generic exclusion levels for all constituents have been met without impermissible dilution and that no characteristic of hazardous waste is exhibited. I am aware that there are significant penalties for submitting a false certification, including the possibility of fine and imprisonment."

(D) Biological treatment sludge from the treatment of one of the following wastes listed in §261.32—organic waste (including heavy ends, still bottoms, light ends, spent solvents, filtrates, and decantates) from the production of carbamates and carbamoyl oximes (EPA Hazardous Waste No. K156), and wastewaters from the production of carbamates and carbamoyl oximes (EPA Hazardous Waste No. K157).

(E) Catalyst inert support media separated from one of the following wastes listed in §261.32—Spent hydrotreating catalyst (EPA Hazardous Waste No. K171), and Spent hydrorefining catalyst (EPA Hazardous Waste No. K172).

(d) Any solid waste described in paragraph (c) of this section is not a hazardous waste if it meets the following criteria:

(1) In the case of any solid waste, it does not exhibit any of the characteristics of hazardous waste identified in subpart C of this part. (However, wastes that exhibit a characteristic at the point of generation may still be subject to the requirements of part 268, even if they no longer exhibit a characteristic at the point of land disposal.)

(2) In the case of a waste which is a listed waste under subpart D of this part, contains a waste listed under subpart D of this part or is derived from a waste listed in subpart D of this part, it also has been excluded from paragraph (c) of this section under §§260.20 and 260.22 of this chapter.

(e) [Reserved]

(f) Notwithstanding paragraphs (a) through (d) of this section and provided the debris as defined in part 268 of this chapter does not exhibit a characteristic identified at subpart C of this part, the following materials are not subject to regulation under 40 CFR parts 260, 261 to 266, 268, or 270:

(1) Hazardous debris as defined in part 268 of this chapter that has been treated using one of the required extraction or destruction technologies specified in Table 1 of §268.45 of this chapter; persons claiming this exclusion in an enforcement action will have the burden of proving by clear and convincing evidence that the material meets all of the exclusion requirements; or

(2) Debris as defined in part 268 of this chapter that the Regional Administrator, considering the extent of contamination, has determined is no longer contaminated with hazardous waste.

(g)(1) A hazardous waste that is listed in subpart D of this part solely because it exhibits one or more characteristics of ignitability as defined under §261.21, corrosivity as defined under §261.22, or reactivity as defined under §261.23 is not a hazardous waste, if the waste no longer exhibits any characteristic of hazardous waste identified in subpart C of this part.

(2) The exclusion described in paragraph (g)(1) of this section also pertains to:

(i) Any mixture of a solid waste and a hazardous waste listed in subpart D of this part solely because it exhibits the characteristics of ignitability, corrosivity, or reactivity as regulated under paragraph (a)(2)(iv) of this section; and

(ii) Any solid waste generated from treating, storing, or disposing of a hazardous waste listed in subpart D of this part solely because it exhibits the characteristics of ignitability, corrosivity, or reactivity as regulated under paragraph (c)(2)(i) of this section.

(3) Wastes excluded under this section are subject to part 268 of this chapter (as applicable), even if they no longer exhibit a characteristic at the point of land disposal.

(4) Any mixture of a solid waste excluded from regulation under §261.4(b)(7) and a hazardous waste listed in subpart D of this part solely because it exhibits one or more of the characteristics of ignitability, corrosivity, or reactivity as regulated under paragraph (a)(2)(iv) of this section is not a hazardous waste, if the mixture no longer exhibits any characteristic of hazardous waste identified in subpart C of this part for which the hazardous waste listed in subpart D of this part was listed.

(h)(1) Hazardous waste containing radioactive waste is no longer a hazardous waste when it meets the eligibility criteria and conditions of 40 CFR part 266, Subpart N ("eligible radioactive mixed waste").

(2) The exemption described in paragraph (h)(1) of this section also pertains to:

(i) Any mixture of a solid waste and an eligible radioactive mixed waste; and

(ii) Any solid waste generated from treating, storing, or disposing of an eligible radioactive mixed waste.

(3) Waste exempted under this section must meet the eligibility criteria and specified conditions in 40 CFR 266.225 and 40 CFR 266.230 (for storage and treatment) and in 40 CFR 266.310 and 40 CFR 266.315 (for transportation and disposal). Waste that fails to satisfy these eligibility criteria and conditions is regulated as hazardous waste.

[57 FR 7632, Mar. 3, 1992; 57 FR 23063, June 1, 1992, as amended at 57 FR 37263, Aug. 18, 1992; 57 FR 41611, Sept. 10, 1992; 57 FR 49279, Oct. 30, 1992; 59 FR 38545, July 28, 1994; 60 FR 7848, Feb. 9, 1995; 63 FR 28637, May 26, 1998; 63 FR 42184, Aug. 6, 1998; 66 FR 27297, May 16, 2001; 66 FR 50333, Oct. 3, 2001; 70 FR 34561, June 14, 2005; 70 FR 57784, Oct. 4, 2005; 71 FR 40258, July 14, 2006]

§ 261.4 Exclusions.

top

(a) *Materials which are not solid wastes.* The following materials are not solid wastes for the purpose of this part:

(1)(i) Domestic sewage; and

(ii) Any mixture of domestic sewage and other wastes that passes through a sewer system to a publicly-owned treatment works for treatment. "Domestic sewage" means untreated sanitary wastes that pass through a sewer system.

(2) Industrial wastewater discharges that are point source discharges subject to regulation under section 402 of the Clean Water Act, as amended.

[*Comment:* This exclusion applies only to the actual point source discharge. It does not exclude industrial wastewaters while they are being collected, stored or treated before discharge, nor does it exclude sludges that are generated by industrial wastewater treatment.]

(3) Irrigation return flows.

(4) Source, special nuclear or by-product material as defined by the Atomic Energy Act of 1954, as amended, 42 U.S.C. 2011 *et seq.*

(5) Materials subjected to in-situ mining techniques which are not removed from the ground as part of the extraction process.

(6) Pulping liquors (*i.e.,* black liquor) that are reclaimed in a pulping liquor recovery furnace and then reused in the pulping process, unless it is accumulated speculatively as defined in §261.1(c) of this chapter.

(7) Spent sulfuric acid used to produce virgin sulfuric acid, unless it is accumulated speculatively as defined in §261.1(c) of this chapter.

(8) Secondary materials that are reclaimed and returned to the original process or processes in which they were generated where they are reused in the production process provided:

(i) Only tank storage is involved, and the entire process through completion of reclamation is closed by being entirely connected with pipes or other comparable enclosed means of conveyance;

(ii) Reclamation does not involve controlled flame combustion (such as occurs in boilers, industrial furnaces, or incinerators);

(iii) The secondary materials are never accumulated in such tanks for over twelve months without being reclaimed; and

(iv) The reclaimed material is not used to produce a fuel, or used to produce products that are used in a manner constituting disposal.

(9)(i) Spent wood preserving solutions that have been reclaimed and are reused for their original intended purpose; and

(ii) Wastewaters from the wood preserving process that have been reclaimed and are reused to treat wood.

(iii) Prior to reuse, the wood preserving wastewaters and spent wood preserving solutions described in paragraphs (a)(9)(i) and (a)(9)(ii) of this section, so long as they meet all of the following conditions:

(A) The wood preserving wastewaters and spent wood preserving solutions are reused on-site at water borne plants in the production process for their original intended purpose;

(B) Prior to reuse, the wastewaters and spent wood preserving solutions are managed to prevent release to either land or groundwater or both;

(C) Any unit used to manage wastewaters and/or spent wood preserving solutions prior to reuse can be visually or otherwise determined to prevent such releases;

(D) Any drip pad used to manage the wastewaters and/or spent wood preserving solutions prior to reuse complies with the standards in part 265, subpart W of this chapter, regardless of whether the plant generates a total of less than 100 kg/month of hazardous waste; and

(E) Prior to operating pursuant to this exclusion, the plant owner or operator prepares a one-time notification stating that the plant intends to claim the exclusion, giving the date on which the plant intends to begin operating under the exclusion, and containing the following language: "I have read the applicable regulation establishing an exclusion for wood preserving wastewaters and spent wood preserving solutions and understand it requires me to comply at all times with the conditions set out in the regulation." The plant must maintain a copy of that document in its on-site records until closure of the facility. The exclusion applies so long as the plant meets all of the conditions. If the plant goes out of compliance with any condition, it may apply to the appropriate Regional Administrator or state Director for reinstatement. The Regional Administrator or state Director may reinstate the exclusion upon finding that the plant has returned to compliance with all conditions and that the violations are not likely to recur.

(10) EPA Hazardous Waste Nos. K060, K087, K141, K142, K143, K144, K145, K147, and K148, and any wastes from the coke by-products processes that are hazardous only because they exhibit the Toxicity Characteristic (TC) specified in section 261.24 of this part when, subsequent to generation, these materials are recycled to coke ovens, to the tar recovery process as a feedstock to produce coal tar, or mixed with coal tar prior to the tar's sale or refining. This exclusion is conditioned on there being no land disposal of the wastes from the point they are generated to the point they are recycled to coke ovens or tar recovery or refining processes, or mixed with coal tar.

(11) Nonwastewater splash condenser dross residue from the treatment of K061 in high temperature metals recovery units, provided it is shipped in drums (if shipped) and not land disposed before recovery.

(12)(i) Oil-bearing hazardous secondary materials (*i.e.* , sludges, byproducts, or spent materials) that are generated at a petroleum refinery (SIC code 2911) and are inserted into the petroleum refining process (SIC code 2911—including, but not limited to, distillation, catalytic cracking, fractionation, gasification (as defined in 40 CFR 260.10) or thermal cracking units (i.e., cokers)) unless the material is

placed on the land, or speculatively accumulated before being so recycled. Materials inserted into thermal cracking units are excluded under this paragraph, provided that the coke product also does not exhibit a characteristic of hazardous waste. Oil-bearing hazardous secondary materials may be inserted into the same petroleum refinery where they are generated, or sent directly to another petroleum refinery and still be excluded under this provision. Except as provided in paragraph (a)(12)(ii) of this section, oil-bearing hazardous secondary materials generated elsewhere in the petroleum industry (i.e., from sources other than petroleum refineries) are not excluded under this section. Residuals generated from processing or recycling materials excluded under this paragraph (a)(12)(i), where such materials as generated would have otherwise met a listing under subpart D of this part, are designated as F037 listed wastes when disposed of or intended for disposal.

(ii) Recovered oil that is recycled in the same manner and with the same conditions as described in paragraph (a)(12)(i) of this section. Recovered oil is oil that has been reclaimed from secondary materials (including wastewater) generated from normal petroleum industry practices, including refining, exploration and production, bulk storage, and transportation incident thereto (SIC codes 1311, 1321, 1381, 1382, 1389, 2911, 4612, 4613, 4922, 4923, 4789, 5171, and 5172.) Recovered oil does not include oil-bearing hazardous wastes listed in subpart D of this part; however, oil recovered from such wastes may be considered recovered oil. Recovered oil does not include used oil as defined in 40 CFR 279.1.

(13) Excluded scrap metal (processed scrap metal, unprocessed home scrap metal, and unprocessed prompt scrap metal) being recycled.

(14) Shredded circuit boards being recycled provided that they are:

(i) Stored in containers sufficient to prevent a release to the environment prior to recovery; and

(ii) Free of mercury switches, mercury relays and nickel-cadmium batteries and lithium batteries.

(15) Condensates derived from the overhead gases from kraft mill steam strippers that are used to comply with 40 CFR 63.446(e). The exemption applies only to combustion at the mill generating the condensates.

(16) Comparable fuels or comparable syngas fuels (i.e., comparable/syngas fuels) that meet the requirements of §261.38.

(17) Spent materials (as defined in §261.1) (other than hazardous wastes listed in subpart D of this part) generated within the primary mineral processing industry from which minerals, acids, cyanide, water, or other values are recovered by mineral processing or by beneficiation, provided that:

(i) The spent material is legitimately recycled to recover minerals, acids, cyanide, water or other values;

(ii) The spent material is not accumulated speculatively;

(iii) Except as provided in paragraph (a)(17)(iv) of this section, the spent material is stored in tanks, containers, or buildings meeting the following minimum integrity standards: a building must be an engineered structure with a floor, walls, and a roof all of which are made of non-earthen materials providing structural support (except smelter buildings may have partially earthen floors provided the secondary material is stored on the non-earthen portion), and have a roof suitable for diverting rainwater away from the foundation; a tank must be free standing, not be a surface impoundment (as defined in 40 CFR 260.10), and be manufactured of a material suitable for containment of its contents; a container must be free standing and be manufactured of a material suitable for containment of its contents. If tanks or containers contain any particulate which may be subject to wind dispersal, the owner/operator must operate these units in a manner which controls fugitive dust. Tanks, containers, and buildings must be designed, constructed and operated to prevent significant releases to the environment of these materials.

(iv) The Regional Administrator or State Director may make a site-specific determination, after public review and comment, that only solid mineral processing spent material may be placed on pads rather than tanks containers, or buildings. Solid mineral processing spent materials do not contain any free liquid. The decision-maker must affirm that pads are designed, constructed and operated to prevent

significant releases of the secondary material into the environment. Pads must provide the same degree of containment afforded by the non-RCRA tanks, containers and buildings eligible for exclusion.

(A) The decision-maker must also consider if storage on pads poses the potential for significant releases via groundwater, surface water, and air exposure pathways. Factors to be considered for assessing the groundwater, surface water, air exposure pathways are: The volume and physical and chemical properties of the secondary material, including its potential for migration off the pad; the potential for human or environmental exposure to hazardous constituents migrating from the pad via each exposure pathway, and the possibility and extent of harm to human and environmental receptors via each exposure pathway.

(B) Pads must meet the following minimum standards: Be designed of non-earthen material that is compatible with the chemical nature of the mineral processing spent material, capable of withstanding physical stresses associated with placement and removal, have run on/runoff controls, be operated in a manner which controls fugitive dust, and have integrity assurance through inspections and maintenance programs.

(C) Before making a determination under this paragraph, the Regional Administrator or State Director must provide notice and the opportunity for comment to all persons potentially interested in the determination. This can be accomplished by placing notice of this action in major local newspapers, or broadcasting notice over local radio stations.

(v) The owner or operator provides notice to the Regional Administrator or State Director providing the following information: The types of materials to be recycled; the type and location of the storage units and recycling processes; and the annual quantities expected to be placed in land-based units. This notification must be updated when there is a change in the type of materials recycled or the location of the recycling process.

(vi) For purposes of paragraph (a)(7) of this section, mineral processing spent materials must be the result of mineral processing and may not include any listed hazardous wastes. Listed hazardous wastes and characteristic hazardous wastes generated by non-mineral processing industries are not eligible for the conditional exclusion from the definition of solid waste.

(18) *Petrochemical recovered oil from an associated organic chemical manufacturing facility*, where the oil is to be inserted into the petroleum refining process (SIC code 2911) along with normal petroleum refinery process streams, provided:

(i) The oil is hazardous only because it exhibits the characteristic of ignitability (as defined in §261.21) and/or toxicity for benzene (§261.24, waste code D018); and

(ii) The oil generated by the organic chemical manufacturing facility is not placed on the land, or speculatively accumulated before being recycled into the petroleum refining process. An "associated organic chemical manufacturing facility" is a facility where the primary SIC code is 2869, but where operations may also include SIC codes 2821, 2822, and 2865; and is physically co-located with a petroleum refinery; and where the petroleum refinery to which the oil being recycled is returned also provides hydrocarbon feedstocks to the organic chemical manufacturing facility. "Petrochemical recovered oil" is oil that has been reclaimed from secondary materials (i.e., sludges, byproducts, or spent materials, including wastewater) from normal organic chemical manufacturing operations, as well as oil recovered from organic chemical manufacturing processes.

(19) Spent caustic solutions from petroleum refining liquid treating processes used as a feedstock to produce cresylic or naphthenic acid unless the material is placed on the land, or accumulated speculatively as defined in §261.1(c).

(20) Hazardous secondary materials used to make zinc fertilizers, provided that the following conditions specified are satisfied:

(i) Hazardous secondary materials used to make zinc micronutrient fertilizers must not be accumulated speculatively, as defined in §261.1 (c)(8).

(ii) Generators and intermediate handlers of zinc-bearing hazardous secondary materials that are to be

incorporated into zinc fertilizers must:

(A) Submit a one-time notice to the Regional Administrator or State Director in whose jurisdiction the exclusion is being claimed, which contains the name, address and EPA ID number of the generator or intermediate handler facility, provides a brief description of the secondary material that will be subject to the exclusion, and identifies when the manufacturer intends to begin managing excluded, zinc-bearing hazardous secondary materials under the conditions specified in this paragraph (a)(20).

(B) Store the excluded secondary material in tanks, containers, or buildings that are constructed and maintained in a way that prevents releases of the secondary materials into the environment. At a minimum, any building used for this purpose must be an engineered structure made of non-earthen materials that provide structural support, and must have a floor, walls and a roof that prevent wind dispersal and contact with rainwater. Tanks used for this purpose must be structurally sound and, if outdoors, must have roofs or covers that prevent contact with wind and rain. Containers used for this purpose must be kept closed except when it is necessary to add or remove material, and must be in sound condition. Containers that are stored outdoors must be managed within storage areas that:

(*1*) Have containment structures or systems sufficiently impervious to contain leaks, spills and accumulated precipitation; and

(*2*) Provide for effective drainage and removal of leaks, spills and accumulated precipitation; and

(*3*) Prevent run-on into the containment system.

(C) With each off-site shipment of excluded hazardous secondary materials, provide written notice to the receiving facility that the material is subject to the conditions of this paragraph (a)(20).

(D) Maintain at the generator's or intermediate handlers's facility for no less than three years records of all shipments of excluded hazardous secondary materials. For each shipment these records must at a minimum contain the following information:

(*1*) Name of the transporter and date of the shipment;

(*2*) Name and address of the facility that received the excluded material, and documentation confirming receipt of the shipment; and

(*3*) Type and quantity of excluded secondary material in each shipment.

(iii) Manufacturers of zinc fertilizers or zinc fertilizer ingredients made from excluded hazardous secondary materials must:

(A) Store excluded hazardous secondary materials in accordance with the storage requirements for generators and intermediate handlers, as specified in paragraph (a)(20)(ii)(B) of this section.

(B) Submit a one-time notification to the Regional Administrator or State Director that, at a minimum, specifies the name, address and EPA ID number of the manufacturing facility, and identifies when the manufacturer intends to begin managing excluded, zinc-bearing hazardous secondary materials under the conditions specified in this paragraph (a)(20).

(C) Maintain for a minimum of three years records of all shipments of excluded hazardous secondary materials received by the manufacturer, which must at a minimum identify for each shipment the name and address of the generating facility, name of transporter and date the materials were received, the quantity received, and a brief description of the industrial process that generated the material.

(D) Submit to the Regional Administrator or State Director an annual report that identifies the total quantities of all excluded hazardous secondary materials that were used to manufacture zinc fertilizers or zinc fertilizer ingredients in the previous year, the name and address of each generating facility, and the industrial process(s) from which they were generated.

(iv) Nothing in this section preempts, overrides or otherwise negates the provision in §262.11 of this

chapter, which requires any person who generates a solid waste to determine if that waste is a hazardous waste.

(v) Interim status and permitted storage units that have been used to store only zinc-bearing hazardous wastes prior to the submission of the one-time notice described in paragraph (a)(20)(ii)(A) of this section, and that afterward will be used only to store hazardous secondary materials excluded under this paragraph, are not subject to the closure requirements of 40 CFR Parts 264 and 265.

(21) Zinc fertilizers made from hazardous wastes, or hazardous secondary materials that are excluded under paragraph (a)(20) of this section, provided that:

(i) The fertilizers meet the following contaminant limits:

(A) For metal contaminants:

Constituent	Maximum Allowable Total Concentration in Fertilizer, per Unit (1%) of Zinc (ppm)
Arsenic	0.3
Cadmium	1.4
Chromium	0.6
Lead	2.8
Mercury	0.3

(B) For dioxin contaminants the fertilizer must contain no more than eight (8) parts per trillion of dioxin, measured as toxic equivalent (TEQ).

(ii) The manufacturer performs sampling and analysis of the fertilizer product to determine compliance with the contaminant limits for metals no less than every six months, and for dioxins no less than every twelve months. Testing must also be performed whenever changes occur to manufacturing processes or ingredients that could significantly affect the amounts of contaminants in the fertilizer product. The manufacturer may use any reliable analytical method to demonstrate that no constituent of concern is present in the product at concentrations above the applicable limits. It is the responsibility of the manufacturer to ensure that the sampling and analysis are unbiased, precise, and representative of the product(s) introduced into commerce.

(iii) The manufacturer maintains for no less than three years records of all sampling and analyses performed for purposes of determining compliance with the requirements of paragraph (a)(21)(ii) of this section. Such records must at a minimum include:

(A) The dates and times product samples were taken, and the dates the samples were analyzed;

(B) The names and qualifications of the person(s) taking the samples;

(C) A description of the methods and equipment used to take the samples;

(D) The name and address of the laboratory facility at which analyses of the samples were performed;

(E) A description of the analytical methods used, including any cleanup and sample preparation methods; and

(F) All laboratory analytical results used to determine compliance with the contaminant limits specified in this paragraph (a)(21).

(22) Used cathode ray tubes (CRTs)

(i) Used, intact CRTs as defined in §260.10 of this chapter are not solid wastes within the United States unless they are disposed, or unless they are speculatively accumulated as defined in §261.1(c)(8) by CRT collectors or glass processors.

(ii) Used, intact CRTs as defined in §260.10 of this chapter are not solid wastes when exported for recycling provided that they meet the requirements of §261.40.

(iii) Used, broken CRTs as defined in §260.10 of this chapter are not solid wastes provided that they meet the requirements of §261.39.

(iv) Glass removed from CRTs is not a solid waste provided that it meets the requirements of §261.39 (c).

(b) *Solid wastes which are not hazardous wastes.* The following solid wastes are not hazardous wastes:

(1) Household waste, including household waste that has been collected, transported, stored, treated, disposed, recovered (e.g., refuse-derived fuel) or reused. "Household waste" means any material (including garbage, trash and sanitary wastes in septic tanks) derived from households (including single and multiple residences, hotels and motels, bunkhouses, ranger stations, crew quarters, campgrounds, picnic grounds and day-use recreation areas). A resource recovery facility managing municipal solid waste shall not be deemed to be treating, storing, disposing of, or otherwise managing hazardous wastes for the purposes of regulation under this subtitle, if such facility:

(i) Receives and burns only

(A) Household waste (from single and multiple dwellings, hotels, motels, and other residential sources) and

(B) Solid waste from commercial or industrial sources that does not contain hazardous waste; and

(ii) Such facility does not accept hazardous wastes and the owner or operator of such facility has established contractual requirements or other appropriate notification or inspection procedures to assure that hazardous wastes are not received at or burned in such facility.

(2) Solid wastes generated by any of the following and which are returned to the soils as fertilizers:

(i) The growing and harvesting of agricultural crops.

(ii) The raising of animals, including animal manures.

(3) Mining overburden returned to the mine site.

(4) Fly ash waste, bottom ash waste, slag waste, and flue gas emission control waste, generated primarily from the combusion of coal or other fossil fuels, except as provided by §266.112 of this chapter for facilities that burn or process hazardous waste.

(5) Drilling fluids, produced waters, and other wastes associated with the exploration, development, or production of crude oil, natural gas or geothermal energy.

(6)(i) Wastes which fail the test for the Toxicity Characteristic because chromium is present or are listed in subpart D due to the presence of chromium, which do not fail the test for the Toxicity Characteristic for any other constituent or are not listed due to the presence of any other constituent, and which do not fail the test for any other characteristic, if it is shown by a waste generator or by waste generators that:

(A) The chromium in the waste is exclusively (or nearly exclusively) trivalent chromium; and

(B) The waste is generated from an industrial process which uses trivalent chromium exclusively (or nearly exclusively) and the process does not generate hexavalent chromium; and

(C) The waste is typically and frequently managed in non-oxidizing environments.

(ii) Specific wastes which meet the standard in paragraphs (b)(6)(i) (A), (B), and (C) (so long as they do not fail the test for the toxicity characteristic for any other constituent, and do not exhibit any other characteristic) are:

(A) Chrome (blue) trimmings generated by the following subcategories of the leather tanning and finishing industry; hair pulp/chrome tan/retan/wet finish; hair save/chrome tan/retan/wet finish; retan/wet finish; no beamhouse; through-the-blue; and shearling.

(B) Chrome (blue) shavings generated by the following subcategories of the leather tanning and finishing industry: Hair pulp/chrome tan/retan/wet finish; hair save/chrome tan/retan/wet finish; retan/wet finish; no beamhouse; through-the-blue; and shearling.

(C) Buffing dust generated by the following subcategories of the leather tanning and finishing industry; hair pulp/chrome tan/retan/wet finish; hair save/chrome tan/retan/wet finish; retan/wet finish; no beamhouse; through-the-blue.

(D) Sewer screenings generated by the following subcategories of the leather tanning and finishing industry: Hair pulp/chrome tan/retan/wet finish; hair save/chrome tan/retan/wet finish; retan/wet finish; no beamhouse; through-the-blue; and shearling.

(E) Wastewater treatment sludges generated by the following subcategories of the leather tanning and finishing industry: Hair pulp/chrome tan/retan/wet finish; hair save/chrome tan/retan/wet finish; retan/wet finish; no beamhouse; through-the-blue; and shearling.

(F) Wastewater treatment sludges generated by the following subcategories of the leather tanning and finishing industry: Hair pulp/chrome tan/retan/wet finish; hair save/chrome tan/retan/wet finish; and through-the-blue.

(G) Waste scrap leather from the leather tanning industry, the shoe manufacturing industry, and other leather product manufacturing industries.

(H) Wastewater treatment sludges from the production of TiO_2pigment using chromium-bearing ores by the chloride process.

(7) Solid waste from the extraction, beneficiation, and processing of ores and minerals (including coal, phosphate rock, and overburden from the mining of uranium ore), except as provided by §266.112 of this chapter for facilities that burn or process hazardous waste.

(i) For purposes of §261.4(b)(7) beneficiation of ores and minerals is restricted to the following activities; crushing; grinding; washing; dissolution; crystallization; filtration; sorting; sizing; drying; sintering; pelletizing; briquetting; calcining to remove water and/or carbon dioxide; roasting, autoclaving, and/or chlorination in preparation for leaching (except where the roasting (and/or autoclaving and/or chlorination)/leaching sequence produces a final or intermediate product that does not undergo further beneficiation or processing); gravity concentration; magnetic separation; electrostatic separation; flotation; ion exchange; solvent extraction; electrowinning; precipitation; amalgamation; and heap, dump, vat, tank, and in situ leaching.

(ii) For the purposes of §261.4(b)(7), solid waste from the processing of ores and minerals includes only the following wastes as generated:

(A) Slag from primary copper processing;

(B) Slag from primary lead processing;

(C) Red and brown muds from bauxite refining;

(D) Phosphogypsum from phosphoric acid production;

(E) Slag from elemental phosphorus production;

(F) Gasifier ash from coal gasification;

(G) Process wastewater from coal gasification;

(H) Calcium sulfate wastewater treatment plant sludge from primary copper processing;

(I) Slag tailings from primary copper processing;

(J) Fluorogypsum from hydrofluoric acid production;

(K) Process wastewater from hydrofluoric acid production;

(L) Air pollution control dust/sludge from iron blast furnaces;

(M) Iron blast furnace slag;

(N) Treated residue from roasting/leaching of chrome ore;

(O) Process wastewater from primary magnesium processing by the anhydrous process;

(P) Process wastewater from phosphoric acid production;

(Q) Basic oxygen furnace and open hearth furnace air pollution control dust/sludge from carbon steel production;

(R) Basic oxygen furnace and open hearth furnace slag from carbon steel production;

(S) Chloride process waste solids from titanium tetrachloride production;

(T) Slag from primary zinc processing.

(iii) A residue derived from co-processing mineral processing secondary materials with normal beneficiation raw materials or with normal mineral processing raw materials remains excluded under paragraph (b) of this section if the owner or operator:

(A) Processes at least 50 percent by weight normal beneficiation raw materials or normal mineral processing raw materials; and,

(B) Legitimately reclaims the secondary mineral processing materials.

(8) Cement kiln dust waste, except as provided by §266.112 of this chapter for facilities that burn or process hazardous waste.

(9) Solid waste which consists of discarded arsenical-treated wood or wood products which fails the test for the Toxicity Characteristic for Hazardous Waste Codes D004 through D017 and which is not a hazardous waste for any other reason if the waste is generated by persons who utilize the arsenical-treated wood and wood products for these materials' intended end use.

(10) Petroleum-contaminated media and debris that fail the test for the Toxicity Characteristic of §261.24 (Hazardous Waste Codes D018 through D043 only) and are subject to the corrective action regulations under part 280 of this chapter.

(11) Injected groundwater that is hazardous only because it exhibits the Toxicity Characteristic (Hazardous Waste Codes D018 through D043 only) in §261.24 of this part that is reinjected through an underground injection well pursuant to free phase hydrocarbon recovery operations undertaken at

petroleum refineries, petroleum marketing terminals, petroleum bulk plants, petroleum pipelines, and petroleum transportation spill sites until January 25, 1993. This extension applies to recovery operations in existence, or for which contracts have been issued, on or before March 25, 1991. For groundwater returned through infiltration galleries from such operations at petroleum refineries, marketing terminals, and bulk plants, until [insert date six months after publication]. New operations involving injection wells (beginning after March 25, 1991) will qualify for this compliance date extension (until January 25, 1993) only if:

(i) Operations are performed pursuant to a written state agreement that includes a provision to assess the groundwater and the need for further remediation once the free phase recovery is completed; and

(ii) A copy of the written agreement has been submitted to: Waste Identification Branch (5304), U.S. Environmental Protection Agency, 1200 Pennsylvania Ave., NW., Washington, DC 20460.

(12) Used chlorofluorocarbon refrigerants from totally enclosed heat transfer equipment, including mobile air conditioning systems, mobile refrigeration, and commercial and industrial air conditioning and refrigeration systems that use chlorofluorocarbons as the heat transfer fluid in a refrigeration cycle, provided the refrigerant is reclaimed for further use.

(13) Non-terne plated used oil filters that are not mixed with wastes listed in subpart D of this part if these oil filters have been gravity hot-drained using one of the following methods:

(i) Puncturing the filter anti-drain back valve or the filter dome end and hot-draining;

(ii) Hot-draining and crushing;

(iii) Dismantling and hot-draining; or

(iv) Any other equivalent hot-draining method that will remove used oil.

(14) Used oil re-refining distillation bottoms that are used as feedstock to manufacture asphalt products.

(15) Leachate or gas condensate collected from landfills where certain solid wastes have been disposed, provided that:

(i) The solid wastes disposed would meet one or more of the listing descriptions for Hazardous Waste Codes K169, K170, K171, K172, K174, K175, K176, K177, K178 and K181 if these wastes had been generated after the effective date of the listing;

(ii) The solid wastes described in paragraph (b)(15)(i) of this section were disposed prior to the effective date of the listing;

(iii) The leachate or gas condensate do not exhibit any characteristic of hazardous waste nor are derived from any other listed hazardous waste;

(iv) Discharge of the leachate or gas condensate, including leachate or gas condensate transferred from the landfill to a POTW by truck, rail, or dedicated pipe, is subject to regulation under sections 307(b) or 402 of the Clean Water Act.

(v) As of February 13, 2001, leachate or gas condensate derived from K169–K172 is no longer exempt if it is stored or managed in a surface impoundment prior to discharge. As of November 21, 2003, leachate or gas condensate derived from K176, K177, and K178 is no longer exempt if it is stored or managed in a surface impoundment prior to discharge. After February 26, 2007, leachate or gas condensate derived from K181 will no longer be exempt if it is stored or managed in a surface impoundment prior to discharge. There is one exception: if the surface impoundment is used to temporarily store leachate or gas condensate in response to an emergency situation (e.g., shutdown of wastewater treatment system), provided the impoundment has a double liner, and provided the leachate or gas condensate is removed from the impoundment and continues to be managed in compliance with the conditions of this paragraph (b)(15)(v) after the emergency ends.

(16)[Reserved]

(17) Solid waste that would otherwise meet the definition of low-level mixed wastes (LLMW) pursuant to §266.210 of this chapter that is generated at the Ortho-McNeil Pharmaceutical, Inc. (OMP Spring House) research and development facility in Spring House, Pennsylvania and treated on-site using a bench-scale high temperature catalytic oxidation unit is not a hazardous waste provided that:

(i) The total volume of LLMW generated and treated is no greater than 50 liters/year, (ii) OMP Spring House submits a written report to the EPA Region III office once every six months beginning six months after June 27, 2005, that must contain the following:

(A) Analysis demonstrating the destruction and removal efficiency of the treatment technology for all organic components of the wastestream,

(B) Analysis demonstrating the capture efficiencies of the treatment technology for all radioactive components of the wastestream and an estimate of the amount of radioactivity released during the reporting period,

(C) Analysis (including concentrations of constituents, including inorganic constituents, present and radioactivity) of the wastestream prior to and after treatment,

(D) Volume of the wastestream being treated per batch, as well as a total for the duration of the reporting period, and

(E) Final disposition of the radioactive residuals from the treatment of the wastestream.

(iii) OMP Spring House makes no significant changes to the design or operation of the high temperature catalytic oxidation unit or the wastestream.

(iv) This exclusion will remain in affect for 5 years from June 27, 2005.

(18) By-products resulting from the production of automobile air bag gas generants at the Autoliv ASP Inc. facility in Promontory Utah, (Autoliv) are exempt from the D003 listing, for a period of five years from May 9, 2001, provided that:

(i) The by-product gas generants are processed on-site in Autoliv's Metal Recovery Furnace (MRF).

(A) By-product gas generants must only be fed to the MRF when it is operating in conformance with the State of Utah, Division of Air Quality's Approval Order DAQE–549–97.

(B) Combustion gas temperature must be maintained below 400 degrees Fahrenheit at the baghouse inlet.

(ii) Prior to processing in the MRF, the by-product gas generants are managed in accordance with the requirements specified in 40 CFR 262.34.

(iii) The Autoliv facility and the MRF are operated and managed in accordance with the requirements of 40 CFR Part 265, Subparts B, C, D, E, G, H, I, and O.

(iv) Residues derived from the processing of by-product gas generants in the MRF are managed in accordance with the requirements specified in 40 CFR Parts 262 and 268.

(v) The following testing of the MRF's stack gas emissions is conducted:

(A) An initial test shall be conducted within 30 operating days of starting feed of by-product gas generants to the MRF. EPA may extend this deadline, at the request of Autoliv, when good cause is shown. The initial test shall consist of three duplicate runs sampling for:

(*1*) Particulate matter using Method 5 as specified in 40 CFR Part 60, Appendix A.

(*2*) The metals Aluminum, Arsenic, Barium, Beryllium, Boron, Cadmium, Chromium, Cobalt, Copper, Lead, and Nickel using Method 29 as specified in 40 CFR Part 60, Appendix A.

(*3*) Polychlorinated di-benzo dioxins and furans using Method 23 0023A as specified in 40 CFR Part 60, Appendix A.

(*4*) Carbon monoxide using Method 10 as specified in 40 CFR Part 60, Appendix A.

(B) After the initial test is completed, an annual stack test (12 months from the previous initial stack test) of the MRF shall be conducted. The annual tests shall consist of three duplicate runs using Method 29 and Method 5 as specified in 40 CFR Part 60, Appendix A.

(C) Testing shall be conducted while by-product gas generants are fed to the MRF at no less than 90% of the planned maximum feed rate, and with the MRF operating parameters within normal ranges.

(D) Initial stack testing results and additional project performance data and information, including the quantity of by-product gas generants processed and the operating parameter values during the test runs, will be submitted by Autoliv to the State of Utah and EPA within 60 days of the completion of the initial stack test.

(E) Annual stack test results and additional project performance data and information, including the quantity of by-product gas generants processed and the operating parameter values during the test runs, will be submitted by Autoliv to EPA and the State of Utah within 60 days of the completion of the annual test.

(vi) Combustion gas discharged to the atmosphere from the MRF meets the following limits:

(A) Dioxin emissions do not exceed 0.4 ng per dry standard cubic meter on a toxicity equivalent quotient (TEQ) basis corrected to 7% Oxygen.

(B) Combined lead and cadmium emissions do not exceed 240 ug per dry standard cubic meter corrected to 7% Oxygen.

(C) Combined arsenic, beryllium, and chromium emissions do not exceed 97 ug per dry standard cubic meter corrected to 7% Oxygen.

(D) Particulate matter emissions do not exceed 34 mg per dry standard cubic meter corrected to 7% Oxygen.

(E) If the limits specified in paragraphs (b)(18)(vi)(A) through (D) of this section are exceeded, Autoliv shall discontinue feeding gas generants to the MRF until such time as Autoliv can demonstrate to EPA and the state of Utah satisfaction that the MRF combustion gas emissions can meet the limits specified in paragraphs (b)(18)(vi) (A) through (D) of this section

(vii) No by-product gas generants or other pyrotechnic wastes generated off-site will be received at the Autoliv facility in Promontory, Utah or processed in the MRF unless otherwise allowed by law (permit or regulation).

(viii) Autoliv will provide EPA and the state of Utah with semi-annual reports (by January 30 and July 30 of each year).

(A) The semi-annual reports will document the amounts of by-product gas generants processed during the reporting period.

(B) The semi-annual reports will provide a summary of the MRF Operating Record during the reporting period, including information on by-product gas generant composition, average feed rates, upset conditions, and spills or releases.

(ix) No significant changes are made to the operating parameter production values of Autoliv's production of air bag gas generants such that any of the constituents listed in appendix VIII of this part are introduced into the process.

(x) Autoliv reports to the EPA any noncompliance which may endanger health or the environment orally within 24 hours from the time Autoliv becomes aware of the circumstances, including:

(A) Any information of a release, discharge, fire, or explosion from the MRF, which could threaten the environment or human health.

(B) The description of the occurrence and its cause shall include:

(*1*) Name, address, and telephone number of the facility;

(*2*) Date, time, and type of incident;

(*3*) Name and quantity of material(s) involved;

(*4*) The extent of injuries, if any;

(*5*) An assessment of actual or potential hazards to the environment and human health, and

(*6*) Estimated quantity and disposition of recovered material that resulted from the incident.

(C) A written notice shall also be provided within five days of the time Autoliv becomes aware of the circumstances. The written notice shall contain a description of the non-compliance and its cause; the period of noncompliance including exact dates and times, and if the noncompliance has not been corrected, the anticipated time it is expected to continue; and steps taken or planned to reduce, eliminate, and prevent reoccurrence of the noncompliance. The EPA may waive the five day written notice requirement in favor of a written report within fifteen days.

(xi) Notifications and submissions made under paragraph (b)(18) of this section shall be sent to the Regional Assistant Administrator for the Office of Partnerships and Regulatory Assistance, U.S. EPA, Region 8 and the Executive Secretary of the Utah Solid and Hazardous Waste Control Board.

(c) Hazardous wastes which are exempted from certain regulations. A hazardous waste which is generated in a product or raw material storage tank, a product or raw material transport vehicle or vessel, a product or raw material pipeline, or in a manufacturing process unit or an associated non-waste-treatment-manufacturing unit, is not subject to regulation under parts 262 through 265, 268, 270, 271 and 124 of this chapter or to the notification requirements of section 3010 of RCRA until it exits the unit in which it was generated, unless the unit is a surface impoundment, or unless the hazardous waste remains in the unit more than 90 days after the unit ceases to be operated for manufacturing, or for storage or transportation of product or raw materials.

(d) *Samples.* (1) Except as provided in paragraph (d)(2) of this section, a sample of solid waste or a sample of water, soil, or air, which is collected for the sole purpose of testing to determine its characteristics or composition, is not subject to any requirements of this part or parts 262 through 268 or part 270 or part 124 of this chapter or to the notification requirements of section 3010 of RCRA, when:

(i) The sample is being transported to a laboratory for the purpose of testing; or

(ii) The sample is being transported back to the sample collector after testing; or

(iii) The sample is being stored by the sample collector before transport to a laboratory for testing; or

(iv) The sample is being stored in a laboratory before testing; or

(v) The sample is being stored in a laboratory after testing but before it is returned to the sample collector; or

(vi) The sample is being stored temporarily in the laboratory after testing for a specific purpose (for example, until conclusion of a court case or enforcement action where further testing of the sample may be necessary).

(2) In order to qualify for the exemption in paragraphs (d)(1) (i) and (ii) of this section, a sample collector shipping samples to a laboratory and a laboratory returning samples to a sample collector must:

(i) Comply with U.S. Department of Transportation (DOT), U.S. Postal Service (USPS), or any other applicable shipping requirements; or

(ii) Comply with the following requirements if the sample collector determines that DOT, USPS, or other shipping requirements do not apply to the shipment of the sample:

(A) Assure that the following information accompanies the sample:

(*1*) The sample collector's name, mailing address, and telephone number;

(*2*) The laboratory's name, mailing address, and telephone number;

(*3*) The quantity of the sample;

(*4*) The date of shipment; and

(*5*) A description of the sample.

(B) Package the sample so that it does not leak, spill, or vaporize from its packaging.

(3) This exemption does not apply if the laboratory determines that the waste is hazardous but the laboratory is no longer meeting any of the conditions stated in paragraph (d)(1) of this section.

(e) *Treatability Study Samples.* (1) Except as provided in paragraph (e)(2) of this section, persons who generate or collect samples for the purpose of conducting treatability studies as defined in section 260.10, are not subject to any requirement of parts 261 through 263 of this chapter or to the notification requirements of Section 3010 of RCRA, nor are such samples included in the quantity determinations of §261.5 and §262.34(d) when:

(i) The sample is being collected and prepared for transportation by the generator or sample collector; or

(ii) The sample is being accumulated or stored by the generator or sample collector prior to transportation to a laboratory or testing facility; or

(iii) The sample is being transported to the laboratory or testing facility for the purpose of conducting a treatability study.

(2) The exemption in paragraph (e)(1) of this section is applicable to samples of hazardous waste being collected and shipped for the purpose of conducting treatability studies provided that:

(i) The generator or sample collector uses (in "treatability studies") no more than 10,000 kg of media contaminated with non-acute hazardous waste, 1000 kg of non-acute hazardous waste other than contaminated media, 1 kg of acute hazardous waste, 2500 kg of media contaminated with acute hazardous waste for each process being evaluated for each generated waste stream; and

(ii) The mass of each sample shipment does not exceed 10,000 kg; the 10,000 kg quantity may be all media contaminated with non-acute hazardous waste, or may include 2500 kg of media contaminated with acute hazardous waste, 1000 kg of hazardous waste, and 1 kg of acute hazardous waste; and

(iii) The sample must be packaged so that it will not leak, spill, or vaporize from its packaging during shipment and the requirements of paragraph A or B of this subparagraph are met.

(A) The transportation of each sample shipment complies with U.S. Department of Transportation (DOT), U.S. Postal Service (USPS), or any other applicable shipping requirements; or

(B) If the DOT, USPS, or other shipping requirements do not apply to the shipment of the sample, the following information must accompany the sample:

(*1*) The name, mailing address, and telephone number of the originator of the sample;

(*2*) The name, address, and telephone number of the facility that will perform the treatability study;

(*3*) The quantity of the sample;

(*4*) The date of shipment; and

(*5*) A description of the sample, including its EPA Hazardous Waste Number.

(iv) The sample is shipped to a laboratory or testing facility which is exempt under §261.4(f) or has an appropriate RCRA permit or interim status.

(v) The generator or sample collector maintains the following records for a period ending 3 years after completion of the treatability study:

(A) Copies of the shipping documents;

(B) A copy of the contract with the facility conducting the treatability study;

(C) Documentation showing:

(*1*) The amount of waste shipped under this exemption;

(*2*) The name, address, and EPA identification number of the laboratory or testing facility that received the waste;

(*3*) The date the shipment was made; and

(*4*) Whether or not unused samples and residues were returned to the generator.

(vi) The generator reports the information required under paragraph (e)(2)(v)(C) of this section in its biennial report.

(3) The Regional Administrator may grant requests on a case-by-case basis for up to an additional two years for treatability studies involving bioremediation. The Regional Administrator may grant requests on a case-by-case basis for quantity limits in excess of those specified in paragraphs (e)(2) (i) and (ii) and (f)(4) of this section, for up to an additional 5000 kg of media contaminated with non-acute hazardous waste, 500 kg of non-acute hazardous waste, 2500 kg of media contaminated with acute hazardous waste and 1 kg of acute hazardous waste:

(i) In response to requests for authorization to ship, store and conduct treatability studies on additional quantities in advance of commencing treatability studies. Factors to be considered in reviewing such requests include the nature of the technology, the type of process (e.g., batch versus continuous), size of the unit undergoing testing (particularly in relation to scale-up considerations), the time/quantity of material required to reach steady state operating conditions, or test design considerations such as mass balance calculations.

(ii) In response to requests for authorization to ship, store and conduct treatability studies on additional quantities after initiation or completion of initial treatability studies, when: There has been an equipment or mechanical failure during the conduct of a treatability study; there is a need to verify the results of a previously conducted treatability study; there is a need to study and analyze alternative techniques

within a previously evaluated treatment process; or there is a need to do further evaluation of an ongoing treatability study to determine final specifications for treatment.

(iii) The additional quantities and timeframes allowed in paragraph (e)(3) (i) and (ii) of this section are subject to all the provisions in paragraphs (e) (1) and (e)(2) (iii) through (vi) of this section. The generator or sample collector must apply to the Regional Administrator in the Region where the sample is collected and provide in writing the following information:

(A) The reason why the generator or sample collector requires additional time or quantity of sample for treatability study evaluation and the additional time or quantity needed;

(B) Documentation accounting for all samples of hazardous waste from the waste stream which have been sent for or undergone treatability studies including the date each previous sample from the waste stream was shipped, the quantity of each previous shipment, the laboratory or testing facility to which it was shipped, what treatability study processes were conducted on each sample shipped, and the available results on each treatability study;

(C) A description of the technical modifications or change in specifications which will be evaluated and the expected results;

(D) If such further study is being required due to equipment or mechanical failure, the applicant must include information regarding the reason for the failure or breakdown and also include what procedures or equipment improvements have been made to protect against further breakdowns; and

(E) Such other information that the Regional Administrator considers necessary.

(f) *Samples Undergoing Treatability Studies at Laboratories and Testing Facilities.* Samples undergoing treatability studies and the laboratory or testing facility conducting such treatability studies (to the extent such facilities are not otherwise subject to RCRA requirements) are not subject to any requirement of this part, part 124, parts 262–266, 268, and 270, or to the notification requirements of Section 3010 of RCRA provided that the conditions of paragraphs (f) (1) through (11) of this section are met. A mobile treatment unit (MTU) may qualify as a testing facility subject to paragraphs (f) (1) through (11) of this section. Where a group of MTUs are located at the same site, the limitations specified in (f) (1) through (11) of this section apply to the entire group of MTUs collectively as if the group were one MTU.

(1) No less than 45 days before conducting treatability studies, the facility notifies the Regional Administrator, or State Director (if located in an authorized State), in writing that it intends to conduct treatability studies under this paragraph.

(2) The laboratory or testing facility conducting the treatability study has an EPA identification number.

(3) No more than a total of 10,000 kg of "as received" media contaminated with non-acute hazardous waste, 2500 kg of media contaminated with acute hazardous waste or 250 kg of other "as received" hazardous waste is subject to initiation of treatment in all treatability studies in any single day. "As received" waste refers to the waste as received in the shipment from the generator or sample collector.

(4) The quantity of "as received" hazardous waste stored at the facility for the purpose of evaluation in treatability studies does not exceed 10,000 kg, the total of which can include 10,000 kg of media contaminated with non-acute hazardous waste, 2500 kg of media contaminated with acute hazardous waste, 1000 kg of non-acute hazardous wastes other than contaminated media, and 1 kg of acute hazardous waste. This quantity limitation does not include treatment materials (including nonhazardous solid waste) added to "as received" hazardous waste.

(5) No more than 90 days have elapsed since the treatability study for the sample was completed, or no more than one year (two years for treatability studies involving bioremediation) have elapsed since the generator or sample collector shipped the sample to the laboratory or testing facility, whichever date first occurs. Up to 500 kg of treated material from a particular waste stream from treatability studies may be archived for future evaluation up to five years from the date of initial receipt. Quantities of materials archived are counted against the total storage limit for the facility.

(6) The treatability study does not involve the placement of hazardous waste on the land or open

burning of hazardous waste.

(7) The facility maintains records for 3 years following completion of each study that show compliance with the treatment rate limits and the storage time and quantity limits. The following specific information must be included for each treatability study conducted:

(i) The name, address, and EPA identification number of the generator or sample collector of each waste sample;

(ii) The date the shipment was received;

(iii) The quantity of waste accepted;

(iv) The quantity of "as received" waste in storage each day;

(v) The date the treatment study was initiated and the amount of "as received" waste introduced to treatment each day;

(vi) The date the treatability study was concluded;

(vii) The date any unused sample or residues generated from the treatability study were returned to the generator or sample collector or, if sent to a designated facility, the name of the facility and the EPA identification number.

(8) The facility keeps, on-site, a copy of the treatability study contract and all shipping papers associated with the transport of treatability study samples to and from the facility for a period ending 3 years from the completion date of each treatability study.

(9) The facility prepares and submits a report to the Regional Administrator, or state Director (if located in an authorized state), by March 15 of each year, that includes the following information for the previous calendar year:

(i) The name, address, and EPA identification number of the facility conducting the treatability studies;

(ii) The types (by process) of treatability studies conducted;

(iii) The names and addresses of persons for whom studies have been conducted (including their EPA identification numbers);

(iv) The total quantity of waste in storage each day;

(v) The quantity and types of waste subjected to treatability studies;

(vi) When each treatability study was conducted;

(vii) The final disposition of residues and unused sample from each treatability study.

(10) The facility determines whether any unused sample or residues generated by the treatability study are hazardous waste under §261.3 and, if so, are subject to parts 261 through 268, and part 270 of this chapter, unless the residues and unused samples are returned to the sample originator under the §261.4(e) exemption.

(11) The facility notifies the Regional Administrator, or State Director (if located in an authorized State), by letter when the facility is no longer planning to conduct any treatability studies at the site.

(g) *Dredged material that is not a hazardous waste.* Dredged material that is subject to the requirements of a permit that has been issued under 404 of the Federal Water Pollution Control Act (33 U.S.C.1344) or section 103 of the Marine Protection, Research, and Sanctuaries Act of 1972 (33 U.S.C. 1413) is not

a hazardous waste. For this paragraph (g), the following definitions apply:

(1) The term *dredged material* has the same meaning as defined in 40 CFR 232.2;

(2) The term *permit* means:

(i) A permit issued by the U.S. Army Corps of Engineers (Corps) or an approved State under section 404 of the Federal Water Pollution Control Act (33 U.S.C. 1344);

(ii) A permit issued by the Corps under section 103 of the Marine Protection, Research, and Sanctuaries Act of 1972 (33 U.S.C. 1413); or

(iii) In the case of Corps civil works projects, the administrative equivalent of the permits referred to in paragraphs (g)(2)(i) and (ii) of this section, as provided for in Corps regulations (for example, see 33 CFR 336.1, 336.2, and 337.6).

[45 FR 33119, May 19, 1980]

Editorial Note: ForFederal Registercitations affecting §261.4, see the List of CFR Sections Affected, which appears in the Finding Aids section of the printed volume and on GPO Access.

§ 261.5 Special requirements for hazardous waste generated by conditionally exempt small quantity generators.

top

(a) A generator is a conditionally exempt small quantity generator in a calendar month if he generates no more than 100 kilograms of hazardous waste in that month.

(b) Except for those wastes identified in paragraphs (e), (f), (g), and (j) of this section, a conditionally exempt small quantity generator's hazardous wastes are not subject to regulation under parts 262 through 266, 268, and parts 270 and 124 of this chapter, and the notification requirements of section 3010 of RCRA, provided the generator complies with the requirements of paragraphs (f), (g), and (j) of this section.

(c) When making the quantity determinations of this part and 40 CFR part 262, the generator must include all hazardous waste that it generates, except hazardous waste that:

(1) Is exempt from regulation under 40 CFR 261.4(c) through (f), 261.6(a)(3), 261.7(a)(1), or 261.8; or

(2) Is managed immediately upon generation only in on-site elementary neutralization units, wastewater treatment units, or totally enclosed treatment facilities as defined in 40 CFR 260.10; or

(3) Is recycled, without prior storage or accumulation, only in an on-site process subject to regulation under 40 CFR 261.6(c)(2); or

(4) Is used oil managed under the requirements of 40 CFR 261.6(a)(4) and 40 CFR part 279; or

(5) Is spent lead-acid batteries managed under the requirements of 40 CFR part 266, subpart G; or

(6) Is universal waste managed under 40 CFR 261.9 and 40 CFR part 273.

(d) In determining the quantity of hazardous waste generated, a generator need not include:

(1) Hazardous waste when it is removed from on-site storage; or

(2) Hazardous waste produced by on-site treatment (including reclamation) of his hazardous waste, so

long as the hazardous waste that is treated was counted once; or

(3) Spent materials that are generated, reclaimed, and subsequently reused on-site, so long as such spent materials have been counted once.

(e) If a generator generates acute hazardous waste in a calendar month in quantities greater than set forth below, all quantities of that acute hazardous waste are subject to full regulation under parts 262 through 266, 268, and parts 270 and 124 of this chapter, and the notification requirements of section 3010 of RCRA:

(1) A total of one kilogram of acute hazardous wastes listed in §§261.31, 261.32, or 261.33(e).

(2) A total of 100 kilograms of any residue or contaminated soil, waste, or other debris resulting from the clean-up of a spill, into or on any land or water, of any acute hazardous wastes listed in §§261.31, 261.32, or 261.33(e).

[Comment: "Full regulation" means those regulations applicable to generators of greater than 1,000 kg of non-acutely hazardous waste in a calendar month.]

(f) In order for acute hazardous wastes generated by a generator of acute hazardous wastes in quantities equal to or less than those set forth in paragraph (e)(1) or (2) of this section to be excluded from full regulation under this section, the generator must comply with the following requirements:

(1) Section 262.11 of this chapter;

(2) The generator may accumulate acute hazardous waste on-site. If he accumulates at any time acute hazardous wastes in quantities greater than those set forth in paragraph (e)(1) or (e)(2) of this section, all of those accumulated wastes are subject to regulation under parts 262 through 266, 268, and parts 270 and 124 of this chapter, and the applicable notification requirements of section 3010 of RCRA. The time period of §262.34(a) of this chapter, for accumulation of wastes on-site, begins when the accumulated wastes exceed the applicable exclusion limit;

(3) A conditionally exempt small quantity generator may either treat or dispose of his acute hazardous waste in an on-site facility or ensure delivery to an off-site treatment, storage, or disposal facility, either of which, if located in the U.S., is:

(i) Permitted under part 270 of this chapter;

(ii) In interim status under parts 270 and 265 of this chapter;

(iii) Authorized to manage hazardous waste by a State with a hazardous waste management program approved under part 271 of this chapter;

(iv) Permitted, licensed, or registered by a State to manage municipal solid waste and, if managed in a municipal solid waste landfill is subject to Part 258 of this chapter;

(v) Permitted, licensed, or registered by a State to manage non-municipal non-hazardous waste and, if managed in a non-municipal non-hazardous waste disposal unit after January 1, 1998, is subject to the requirements in §§257.5 through 257.30 of this chapter; or

(vi) A facility which:

(A) Beneficially uses or reuses, or legitimately recycles or reclaims its waste; or

(B) Treats its waste prior to beneficial use or reuse, or legitimate recycling or reclamation; or

(vii) For universal waste managed under part 273 of this chapter, a universal waste handler or destination facility subject to the requirements of part 273 of this chapter.

(g) In order for hazardous waste generated by a conditionally exempt small quantity generator in quantities of less than 100 kilograms of hazardous waste during a calendar month to be excluded from full regulation under this section, the generator must comply with the following requirements:

(1) Section 262.11 of this chapter;

(2) The conditionally exempt small quantity generator may accumulate hazardous waste on-site. If he accumulates at any time more than a total of 1000 kilograms of his hazardous wastes, all of those accumulated wastes are subject to regulation under the special provisions of part 262 applicable to generators of between 100 kg and 1000 kg of hazardous waste in a calendar month as well as the requirements of parts 263 through 266, 268, and parts 270 and 124 of this chapter, and the applicable notification requirements of section 3010 of RCRA. The time period of §262.34(d) for accumulation of wastes on-site begins for a conditionally exempt small quantity generator when the accumulated wastes exceed 1000 kilograms;

(3) A conditionally exempt small quantity generator may either treat or dispose of his hazardous waste in an on-site facility or ensure delivery to an off-site treatment, storage or disposal facility, either of which, if located in the U.S., is:

(i) Permitted under part 270 of this chapter;

(ii) In interim status under parts 270 and 265 of this chapter;

(iii) Authorized to manage hazardous waste by a State with a hazardous waste management program approved under part 271 of this chapter;

(iv) Permitted, licensed, or registered by a State to manage municipal solid waste and, if managed in a municipal solid waste landfill is subject to Part 258 of this chapter;

(v) Permitted, licensed, or registered by a State to manage non-municipal non-hazardous waste and, if managed in a non-municipal non-hazardous waste disposal unit after January 1, 1998, is subject to the requirements in §§257.5 through 257.30 of this chapter; or

(vi) A facility which:

(A) Beneficially uses or reuses, or legitimately recycles or reclaims its waste; or

(B) Treats its waste prior to beneficial use or reuse, or legitimate recycling or reclamation; or

(vii) For universal waste managed under part 273 of this chapter, a universal waste handler or destination facility subject to the requirements of part 273 of this chapter.

(h) Hazardous waste subject to the reduced requirements of this section may be mixed with non-hazardous waste and remain subject to these reduced requirements even though the resultant mixture exceeds the quantity limitations identified in this section, unless the mixture meets any of the characteristics of hazardous waste identified in subpart C.

(i) If any person mixes a solid waste with a hazardous waste that exceeds a quantity exclusion level of this section, the mixture is subject to full regulation.

(j) If a conditionally exempt small quantity generator's wastes are mixed with used oil, the mixture is subject to part 279 of this chapter. Any material produced from such a mixture by processing, blending, or other treatment is also so regulated.

[51 FR 10174, Mar. 24, 1986, as amended at 51 FR 28682, Aug. 8, 1986; 51 FR 40637, Nov. 7, 1986; 53 FR 27163, July 19, 1988; 58 FR 26424, May 3, 1993; 60 FR 25541, May 11, 1995; 61 FR 34278, July 1, 1996; 63 FR 24968, May 6, 1998; 63 FR 37782, July 14, 1998; 68 FR 44665, July 30, 2003]

§ 261.6 Requirements for recyclable materials.

top

(a)(1) Hazardous wastes that are recycled are subject to the requirements for generators, transporters, and storage facilities of paragraphs (b) and (c) of this section, except for the materials listed in paragraphs (a)(2) and (a)(3) of this section. Hazardous wastes that are recycled will be known as "recyclable materials."

(2) The following recyclable materials are not subject to the requirements of this section but are regulated under subparts C through N of part 266 of this chapter and all applicable provisions in parts 270 and 124 of this chapter:

(i) Recyclable materials used in a manner constituting disposal (40 CFR part 266, subpart C);

(ii) Hazardous wastes burned for energy recovery in boilers and industrial furnaces that are not regulated under subpart O of part 264 or 265 of this chapter (40 CFR part 266, subpart H);

(iii) Recyclable materials from which precious metals are reclaimed (40 CFR part 266, subpart F);

(iv) Spent lead-acid batteries that are being reclaimed (40 CFR part 266, subpart G).

(3) The following recyclable materials are not subject to regulation under parts 262 through parts 266 or parts 268, 270 or 124 of this chapter, and are not subject to the notification requirements of section 3010 of RCRA:

(i) Industrial ethyl alcohol that is reclaimed except that, unless provided otherwise in an international agreement as specified in §262.58:

(A) A person initiating a shipment for reclamation in a foreign country, and any intermediary arranging for the shipment, must comply with the requirements applicable to a primary exporter in §§262.53, 262.56 (a)(1)–(4), (6), and (b), and 262.57, export such materials only upon consent of the receiving country and in conformance with the EPA Acknowledgment of Consent as defined in subpart E of part 262, and provide a copy of the EPA Acknowledgment of Consent to the shipment to the transporter transporting the shipment for export;

(B) Transporters transporting a shipment for export may not accept a shipment if he knows the shipment does not conform to the EPA Acknowledgment of Consent, must ensure that a copy of the EPA Acknowledgment of Consent accompanies the shipment and must ensure that it is delivered to the facility designated by the person initiating the shipment.

(ii) Scrap metal that is not excluded under §261.4(a)(13);

(iii) Fuels produced from the refining of oil-bearing hazardous waste along with normal process streams at a petroleum refining facility if such wastes result from normal petroleum refining, production, and transportation practices (this exemption does not apply to fuels produced from oil recovered from oil-bearing hazardous waste, where such recovered oil is already excluded under §261.4(a)(12);

(iv)(A) Hazardous waste fuel produced from oil-bearing hazardous wastes from petroleum refining, production, or transportation practices, or produced from oil reclaimed from such hazardous wastes, where such hazardous wastes are reintroduced into a process that does not use distillation or does not produce products from crude oil so long as the resulting fuel meets the used oil specification under §279.11 of this chapter and so long as no other hazardous wastes are used to produce the hazardous waste fuel;

(B) Hazardous waste fuel produced from oil-bearing hazardous waste from petroleum refining production, and transportation practices, where such hazardous wastes are reintroduced into a refining process after a point at which contaminants are removed, so long as the fuel meets the used oil fuel specification under §279.11 of this chapter; and

(C) Oil reclaimed from oil-bearing hazardous wastes from petroleum refining, production, and

transportation practices, which reclaimed oil is burned as a fuel without reintroduction to a refining process, so long as the reclaimed oil meets the used oil fuel specification under §279.11 of this chapter.

(4) Used oil that is recycled and is also a hazardous waste solely because it exhibits a hazardous characteristic is not subject to the requirements of parts 260 through 268 of this chapter, but is regulated under part 279 of this chapter. Used oil that is recycled includes any used oil which is reused, following its original use, for any purpose (including the purpose for which the oil was originally used). Such term includes, but is not limited to, oil which is re-refined, reclaimed, burned for energy recovery, or reprocessed.

(5) Hazardous waste that is exported to or imported from designated member countries of the Organization for Economic Cooperation and Development (OECD) (as defined in §262.58(a)(1)) for purpose of recovery is subject to the requirements of 40 CFR part 262, subpart H, if it is subject to either the Federal manifesting requirements of 40 CFR Part 262, to the universal waste management standards of 40 CFR Part 273, or to State requirements analogous to 40 CFR Part 273.

(b) Generators and transporters of recyclable materials are subject to the applicable requirements of parts 262 and 263 of this chapter and the notification requirements under section 3010 of RCRA, except as provided in paragraph (a) of this section.

(c)(1) Owners and operators of facilities that store recyclable materials before they are recycled are regulated under all applicable provisions of subparts A though L, AA, BB, and CC of parts 264 and 265, and under parts 124, 266, 268, and 270 of this chapter and the notification requirements under section 3010 of RCRA, except as provided in paragraph (a) of this section. (The recycling process itself is exempt from regulation except as provided in §261.6(d).)

(2) Owners or operators of facilities that recycle recyclable materials without storing them before they are recycled are subject to the following requirements, except as provided in paragraph (a) of this section:

(i) Notification requirements under section 3010 of RCRA;

(ii) Sections 265.71 and 265.72 (dealing with the use of the manifest and manifest discrepancies) of this chapter.

(iii) Section 261.6(d) of this chapter.

(d) Owners or operators of facilities subject to RCRA permitting requirements with hazardous waste management units that recycle hazardous wastes are subject to the requirements of subparts AA and BB of part 264 or 265 of this chapter.

[50 FR 49203, Nov. 29, 1985, as amended at 51 FR 28682, Aug. 8, 1986; 51 FR 40637, Nov. 7, 1986; 52 FR 11821, Apr. 13, 1987; 55 FR 25493, June 21, 1990; 56 FR 7207, Feb. 21, 1991; 56 FR 32692, July 17, 1991; 57 FR 41612, Sept. 10, 1992; 59 FR 38545, July 28, 1994; 60 FR 25541, May 11, 1995; 61 FR 16309, Apr. 12, 1996; 61 FR 59950, Nov. 25, 1996; 62 FR 26019, May 12, 1997; 63 FR 24968, May 6, 1998; 63 FR 42185, Aug. 6, 1998; 66 FR 28085, May 22, 2001; 71 FR 40259, July 14, 2006; 73 FR 37860, July 2, 2008]

§ 261.7 Residues of hazardous waste in empty containers.

top

(a)(1) Any hazardous waste remaining in either: (i) an empty container; or (ii) an inner liner removed from an empty container, as defined in paragraph (b) of this section, is not subject to regulation under parts 261 through 265, 267, 268, 270, or 124 this chapter or to the notification requirements of section 3010 of RCRA.

(2) Any hazardous waste in either (i) a container that is not empty or (ii) an inner liner removed from a container that is not empty, as defined in paragraph (b) of this section, is subject to regulation under parts 261 through 265, and parts 268, 270 and 124 of this chapter and to the notification requirements of

section 3010 of RCRA.

(b)(1) A container or an inner liner removed from a container that has held any hazardous waste, except *a waste that is a compressed gas or that is identified as an acute hazardous waste listed in* §§261.31, 261.32, or 261.33(e) of this chapter is empty if:

(i) All wastes have been removed that can be removed using the practices commonly employed to remove materials from that type of container, e.g., pouring, pumping, and aspirating, *and*

(ii) No more than 2.5 centimeters (one inch) of residue remain on the bottom of the container or inner liner, *or*

(iii)(A) No more than 3 percent by weight of the total capacity of the container remains in the container or inner liner if the container is less than or equal to 119 gallons in size; or

(B) No more than 0.3 percent by weight of the total capacity of the container remains in the container or inner liner if the container is greater than 119 gallons in size.

(2) A container that has held a hazardous waste that is a compressed gas is empty when the pressure in the container approaches atmospheric.

(3) A container or an inner liner removed from a container that has held an acute hazardous waste listed in §§261.31, 261.32, or 261.33(e) is empty if:

(i) The container or inner liner has been triple rinsed using a solvent capable of removing the commercial chemical product or manufacturing chemical intermediate;

(ii) The container or inner liner has been cleaned by another method that has been shown in the scientific literature, or by tests conducted by the generator, to achieve equivalent removal; or

(iii) In the case of a container, the inner liner that prevented contact of the commercial chemical product or manufacturing chemical intermediate with the container, has been removed.

[45 FR 78529, Nov. 25, 1980, as amended at 47 FR 36097, Aug. 18, 1982; 48 FR 14294, Apr. 1, 1983; 50 FR 1999, Jan. 14, 1985; 51 FR 40637, Nov. 7, 1986; 70 FR 10815, Mar. 4, 2005; 70 FR 53453, Sept. 8, 2005]

§ 261.8 PCB wastes regulated under Toxic Substance Control Act.

top

The disposal of PCB-containing dielectric fluid and electric equipment containing such fluid authorized for use and regulated under part 761 of this chapter and that are hazardous only because they fail the test for the Toxicity Characteristic (Hazardous Waste Codes D018 through D043 only) are exempt from regulation under parts 261 through 265, and parts 268, 270, and 124 of this chapter, and the notification requirements of section 3010 of RCRA.

[55 FR 11862, Mar. 29, 1990]

§ 261.9 Requirements for Universal Waste.

top

The wastes listed in this section are exempt from regulation under parts 262 through 270 of this chapter except as specified in part 273 of this chapter and, therefore are not fully regulated as hazardous waste. The wastes listed in this section are subject to regulation under 40 CFR part 273:

EPAPA011000038

(a) Batteries as described in 40 CFR 273.2;

(b) Pesticides as described in §273.3 of this chapter;

(c) Mercury-containing equipment as described in §273.4 of this chapter; and

(d) Lamps as described in §273.5 of this chapter.

[60 FR 25541, May 11, 1995, as amended at 64 FR 36487, July 6, 1999; 70 FR 45520, Aug. 5, 2005]

Subpart B—Criteria for Identifying the Characteristics of Hazardous Waste and for Listing Hazardous Waste

top

§ 261.10 Criteria for identifying the characteristics of hazardous waste.

top

(a) The Administrator shall identify and define a characteristic of hazardous waste in subpart C only upon determining that:

(1) A solid waste that exhibits the characteristic may:

(i) Cause, or significantly contribute to, an increase in mortality or an increase in serious irreversible, or incapacitating reversible, illness; or

(ii) Pose a substantial present or potential hazard to human health or the environment when it is improperly treated, stored, transported, disposed of or otherwise managed; and

(2) The characteristic can be:

(i) Measured by an available standardized test method which is reasonably within the capability of generators of solid waste or private sector laboratories that are available to serve generators of solid waste; or

(ii) Reasonably detected by generators of solid waste through their knowledge of their waste.

(b) [Reserved]

§ 261.11 Criteria for listing hazardous waste.

top

(a) The Administrator shall list a solid waste as a hazardous waste only upon determining that the solid waste meets one of the following criteria:

(1) It exhibits any of the characteristics of hazardous waste identified in subpart C.

(2) It has been found to be fatal to humans in low doses or, in the absence of data on human toxicity, it has been shown in studies to have an oral LD 50 toxicity (rat) of less than 50 milligrams per kilogram, an inhalation LC 50 toxicity (rat) of less than 2 milligrams per liter, or a dermal LD 50 toxicity (rabbit) of less than 200 milligrams per kilogram or is otherwise capable of causing or significantly contributing to an increase in serious irreversible, or incapacitating reversible, illness. (Waste listed in accordance with these criteria will be designated Acute Hazardous Waste.)

(3) It contains any of the toxic constituents listed in appendix VIII and, after considering the following factors, the Administrator concludes that the waste is capable of posing a substantial present or potential hazard to human health or the environment when improperly treated, stored, transported or disposed of, or otherwise managed:

(i) The nature of the toxicity presented by the constituent.

(ii) The concentration of the constituent in the waste.

(iii) The potential of the constituent or any toxic degradation product of the constituent to migrate from the waste into the environment under the types of improper management considered in paragraph (a)(3)(vii) of this section.

(iv) The persistence of the constituent or any toxic degradation product of the constituent.

(v) The potential for the constituent or any toxic degradation product of the constituent to degrade into non-harmful constituents and the rate of degradation.

(vi) The degree to which the constituent or any degradation product of the constituent bioaccumulates in ecosystems.

(vii) The plausible types of improper management to which the waste could be subjected.

(viii) The quantities of the waste generated at individual generation sites or on a regional or national basis.

(ix) The nature and severity of the human health and environmental damage that has occurred as a result of the improper management of wastes containing the constituent.

(x) Action taken by other governmental agencies or regulatory programs based on the health or environmental hazard posed by the waste or waste constituent.

(xi) Such other factors as may be appropriate.

Substances will be listed on appendix VIII only if they have been shown in scientific studies to have toxic, carcinogenic, mutagenic or teratogenic effects on humans or other life forms.

(Wastes listed in accordance with these criteria will be designated Toxic wastes.)

(b) The Administrator may list classes or types of solid waste as hazardous waste if he has reason to believe that individual wastes, within the class or type of waste, typically or frequently are hazardous under the definition of hazardous waste found in section 1004(5) of the Act.

(c) The Administrator will use the criteria for listing specified in this section to establish the exclusion limits referred to in §261.5(c).

[45 FR 33119, May 19, 1980, as amended at 55 FR 18726, May 4, 1990; 57 FR 14, Jan. 2, 1992]

Subpart C—Characteristics of Hazardous Waste

top

§ 261.20 General.

top

(a) A solid waste, as defined in §261.2, which is not excluded from regulation as a hazardous waste under §261.4(b), is a hazardous waste if it exhibits any of the characteristics identified in this subpart.

[*Comment:* §262.11 of this chapter sets forth the generator's responsibility to determine whether his waste exhibits one or more of the characteristics identified in this subpart]

(b) A hazardous waste which is identified by a characteristic in this subpart is assigned every EPA Hazardous Waste Number that is applicable as set forth in this subpart. This number must be used in complying with the notification requirements of section 3010 of the Act and all applicable recordkeeping and reporting requirements under parts 262 through 265, 268, and 270 of this chapter.

(c) For purposes of this subpart, the Administrator will consider a sample obtained using any of the applicable sampling methods specified in appendix I to be a representative sample within the meaning of part 260 of this chapter.

[*Comment:* Since the appendix I sampling methods are not being formally adopted by the Administrator, a person who desires to employ an alternative sampling method is not required to demonstrate the equivalency of his method under the procedures set forth in §§260.20 and 260.21.]

[45 FR 33119, May 19, 1980, as amended at 51 FR 40636, Nov. 7, 1986; 55 FR 22684, June 1, 1990; 56 FR 3876, Jan. 31, 1991]

§ 261.21 Characteristic of ignitability.

top

(a) A solid waste exhibits the characteristic of ignitability if a representative sample of the waste has any of the following properties:

(1) It is a liquid, other than an aqueous solution containing less than 24 percent alcohol by volume and has flash point less than 60 °C (140 °F), as determined by a Pensky-Martens Closed Cup Tester, using the test method specified in ASTM Standard D 93–79 or D 93–80 (incorporated by reference, see §260.11), or a Setaflash Closed Cup Tester, using the test method specified in ASTM Standard D 3278–78 (incorporated by reference, see §260.11).

(2) It is not a liquid and is capable, under standard temperature and pressure, of causing fire through friction, absorption of moisture or spontaneous chemical changes and, when ignited, burns so vigorously and persistently that it creates a hazard.

(3) It is an ignitable compressed gas.

(i) The term "compressed gas" shall designate any material or mixture having in the container an absolute pressure exceeding 40 p.s.i. at 70 °F or, regardless of the pressure at 70 °F, having an absolute pressure exceeding 104 p.s.i. at 130 °F; or any liquid flammable material having a vapor pressure exceeding 40 p.s.i. absolute at 100 °F as determined by ASTM Test D–323.

(ii) A compressed gas shall be characterized as ignitable if any one of the following occurs:

(A) Either a mixture of 13 percent or less (by volume) with air forms a flammable mixture or the flammable range with air is wider than 12 percent regardless of the lower limit. These limits shall be determined at atmospheric temperature and pressure. The method of sampling and test procedure shall be acceptable to the Bureau of Explosives and approved by the director, Pipeline and Hazardous Materials Technology, U.S. Department of Transportation (see Note 2).

(B) Using the Bureau of Explosives' Flame Projection Apparatus (see Note 1), the flame projects more than 18 inches beyond the ignition source with valve opened fully, or, the flame flashes back and burns at the valve with any degree of valve opening.

(C) Using the Bureau of Explosives' Open Drum Apparatus (see Note 1), there is any significant propagation of flame away from the ignition source.

(D) Using the Bureau of Explosives' Closed Drum Apparatus (see Note 1), there is any explosion of the vapor-air mixture in the drum.

(4) It is an oxidizer. An oxidizer for the purpose of this subchapter is a substance such as a chlorate, permanganate, inorganic peroxide, or a nitrate, that yields oxygen readily to stimulate the combustion of organic matter (see Note 4).

(i) An organic compound containing the bivalent -O-O- structure and which may be considered a derivative of hydrogen peroxide where one or more of the hydrogen atoms have been replaced by organic radicals must be classed as an organic peroxide unless:

(A) The material meets the definition of a Class A explosive or a Class B explosive, as defined in §261.23(a)(8), in which case it must be classed as an explosive,

(B) The material is forbidden to be offered for transportation according to 49 CFR 172.101 and 49 CFR 173.21,

(C) It is determined that the predominant hazard of the material containing an organic peroxide is other than that of an organic peroxide, or

(D) According to data on file with the Pipeline and Hazardous Materials Safety Administration in the U.S. Department of Transportation (see Note 3), it has been determined that the material does not present a hazard in transportation.

(b) A solid waste that exhibits the characteristic of ignitability has the EPA Hazardous Waste Number of D001.

Note 1: A description of the Bureau of Explosives' Flame Projection Apparatus, Open Drum Apparatus, Closed Drum Apparatus, and method of tests may be procured from the Bureau of Explosives.

Note 2: As part of a U.S. Department of Transportation (DOT) reorganization, the Office of Hazardous Materials Technology (OHMT), which was the office listed in the 1980 publication of 49 CFR 173.300 for the purposes of approving sampling and test procedures for a flammable gas, ceased operations on February 20, 2005. OHMT programs have moved to the Pipeline and Hazardous Materials Safety Administration (PHMSA) in the DOT.

Note 3: As part of a U.S. Department of Transportation (DOT) reorganization, the Research and Special Programs Administration (RSPA), which was the office listed in the 1980 publication of 49 CFR 173.151a for the purposes of determining that a material does not present a hazard in transport, ceased operations on February 20, 2005. RSPA programs have moved to the Pipeline and Hazardous Materials Safety Administration (PHMSA) in the DOT.

Note 4: The DOT regulatory definition of an oxidizer was contained in §173.151 of 49 CFR, and the definition of an organic peroxide was contained in paragraph 173.151a. An organic peroxide is a type of oxidizer.

[45 FR 33119, May 19, 1980, as amended at 46 FR 35247, July 7, 1981; 55 FR 22684, June 1, 1990; 70 FR 34561, June 14, 2005; 71 FR 40259, July 14, 2006]

§ 261.22 Characteristic of corrosivity.

top

(a) A solid waste exhibits the characteristic of corrosivity if a representative sample of the waste has either of the following properties:

(1) It is aqueous and has a pH less than or equal to 2 or greater than or equal to 12.5, as determined by a pH meter using Method 9040C in "Test Methods for Evaluating Solid Waste, Physical/Chemical Methods," EPA Publication SW–846, as incorporated by reference in §260.11 of this chapter.

(2) It is a liquid and corrodes steel (SAE 1020) at a rate greater than 6.35 mm (0.250 inch) per year at a test temperature of 55 °C (130 °F) as determined by Method 1110A in "Test Methods for Evaluating Solid Waste, Physical/Chemical Methods," EPA Publication SW–846, and as incorporated by reference in §260.11 of this chapter.

(b) A solid waste that exhibits the characteristic of corrosivity has the EPA Hazardous Waste Number of D002.

[45 FR 33119, May 19, 1980, as amended at 46 FR 35247, July 7, 1981; 55 FR 22684, June 1, 1990; 58 FR 46049, Aug. 31, 1993; 70 FR 34561, June 14, 2005]

§ 261.23 Characteristic of reactivity.

top

(a) A solid waste exhibits the characteristic of reactivity if a representative sample of the waste has *any* of the following properties:

(1) It is normally unstable and readily undergoes violent change without detonating.

(2) It reacts violently with water.

(3) It forms potentially explosive mixtures with water.

(4) When mixed with water, it generates toxic gases, vapors or fumes in a quantity sufficient to present a danger to human health or the environment.

(5) It is a cyanide or sulfide bearing waste which, when exposed to pH conditions between 2 and 12.5, can generate toxic gases, vapors or fumes in a quantity sufficient to present a danger to human health or the environment.

(6) It is capable of detonation or explosive reaction if it is subjected to a strong initiating source or if heated under confinement.

(7) It is readily capable of detonation or explosive decomposition or reaction at standard temperature and pressure.

(8) It is a forbidden explosive as defined in 49 CFR 173.51, or a Class A explosive as defined in 49 CFR 173.53 or a Class B explosive as defined in 49 CFR 173.88.

(b) A solid waste that exhibits the characteristic of reactivity has the EPA Hazardous Waste Number of D003.

[45 FR 33119, May 19, 1980, as amended at 55 FR 22684, June 1, 1990]

§ 261.24 Toxicity characteristic.

top

(a) A solid waste (except manufactured gas plant waste) exhibits the characteristic of toxicity if, using the Toxicity Characteristic Leaching Procedure, test Method 1311 in "Test Methods for Evaluating Solid Waste, Physical/Chemical Methods," EPA Publication SW–846, as incorporated by reference in §260.11 of this chapter, the extract from a representative sample of the waste contains any of the contaminants listed in table 1 at the concentration equal to or greater than the respective value given in that table. Where the waste contains less than 0.5 percent filterable solids, the waste itself, after filtering using the methodology outlined in Method 1311, is considered to be the extract for the purpose of this section.

(b) A solid waste that exhibits the characteristic of toxicity has the EPA Hazardous Waste Number specified in Table 1 which corresponds to the toxic contaminant causing it to be hazardous.

Table 1 —Maximum Concentration of Contaminants for the Toxicity Characteristic

EPA HW No.[1]	Contaminant	CAS No.[2]	Regulatory Level (mg/L)
D004	Arsenic	7440–38–2	5.0
D005	Barium	7440–39–3	100.0
D018	Benzene	71–43–2	0.5
D006	Cadmium	7440–43–9	1.0
D019	Carbon tetrachloride	56–23–5	0.5
D020	Chlordane	57–74–9	0.03
D021	Chlorobenzene	108–90–7	100.0
D022	Chloroform	67–66–3	6.0
D007	Chromium	7440–47–3	5.0
D023	o-Cresol	95–48–7	[4]200.0
D024	m-Cresol	108–39–4	[4]200.0
D025	p-Cresol	106–44–5	[4]200.0
D026	Cresol		[4]200.0
D016	2,4-D	94–75–7	10.0
D027	1,4-Dichlorobenzene	106–46–7	7.5
D028	1,2-Dichloroethane	107–06–2	0.5
D029	1,1-Dichloroethylene	75–35–4	0.7
D030	2,4-Dinitrotoluene	121–14–2	[3]0.13
D012	Endrin	72–20–8	0.02
D031	Heptachlor (and its epoxide)	76–44–8	0.008
D032	Hexachlorobenzene	118–74–1	[3]0.13
D033	Hexachlorobutadiene	87–68–3	0.5
D034	Hexachloroethane	67–72–1	3.0
D008	Lead	7439–92–1	5.0

D013	Lindane	58–89–9	0.4
D009	Mercury	7439–97–6	0.2
D014	Methoxychlor	72–43–5	10.0
D035	Methyl ethyl ketone	78–93–3	200.0
D036	Nitrobenzene	98–95–3	2.0
D037	Pentrachlorophenol	87–86–5	100.0
D038	Pyridine	110–86–1	[3]5.0
D010	Selenium	7782–49–2	1.0
D011	Silver	7440–22–4	5.0
D039	Tetrachloroethylene	127–18–4	0.7
D015	Toxaphene	8001–35–2	0.5
D040	Trichloroethylene	79–01–6	0.5
D041	2,4,5-Trichlorophenol	95–95–4	400.0
D042	2,4,6-Trichlorophenol	88–06–2	2.0
D017	2,4,5-TP (Silvex)	93–72–1	1.0
D043	Vinyl chloride	75–01–4	0.2

[1]Hazardous waste number.

[2]Chemical abstracts service number.

[3]Quantitation limit is greater than the calculated regulatory level. The quantitation limit therefore becomes the regulatory level.

[4]If o-, m-, and p-Cresol concentrations cannot be differentiated, the total cresol (D026) concentration is used. The regulatory level of total cresol is 200 mg/l.

[55 FR 11862, Mar. 29, 1990, as amended at 55 FR 22684, June 1, 1990; 55 FR 26987, June 29, 1990; 58 FR 46049, Aug. 31, 1993; 67 FR 11254, Mar. 13, 2002; 71 FR 40259, July 14, 2006]

Subpart D—Lists of Hazardous Wastes

top

§ 261.30 General.

top

(a) A solid waste is a hazardous waste if it is listed in this subpart, unless it has been excluded from this list under §§260.20 and 260.22.

(b) The Administrator will indicate his basis for listing the classes or types of wastes listed in this subpart by employing one or more of the following Hazard Codes:

Ignitable Waste	(I)
Corrosive Waste	(C)
Reactive Waste	(R)
Toxicity Characteristic Waste	(E)
Acute Hazardous Waste	(H)
Toxic Waste	(T)

Appendix VII identifies the constituent which caused the Administrator to list the waste as a Toxicity Characteristic Waste (E) or Toxic Waste (T) in §§261.31 and 261.32.

(c) Each hazardous waste listed in this subpart is assigned an EPA Hazardous Waste Number which precedes the name of the waste. This number must be used in complying with the notification requirements of Section 3010 of the Act and certain recordkeeping and reporting requirements under parts 262 through 265, 268, and part 270 of this chapter.

(d) The following hazardous wastes listed in §261.31 or §261.32 are subject to the exclusion limits for acutely hazardous wastes established in §261.5: EPA Hazardous Wastes Nos. FO20, FO21, FO22, FO23, FO26, and FO27.

[45 FR 33119, May 19, 1980, as amended at 48 FR 14294, Apr. 1, 1983; 50 FR 2000, Jan. 14, 1985; 51 FR 40636, Nov. 7, 1986; 55 FR 11863, Mar. 29, 1990]

§ 261.31 Hazardous wastes from non-specific sources.

top

(a) The following solid wastes are listed hazardous wastes from non-specific sources unless they are excluded under §§260.20 and 260.22 and listed in appendix IX.

Industry and EPA hazardous waste No.	Hazardous waste	Hazard code
Generic:		
F001	The following spent halogenated solvents used in degreasing: Tetrachloroethylene, trichloroethylene, methylene chloride, 1,1,1-trichloroethane, carbon tetrachloride, and chlorinated fluorocarbons; all spent solvent mixtures/blends used in degreasing containing, before use, a total of ten percent or more (by volume) of one or more of the above halogenated solvents or those solvents listed in F002, F004, and F005; and still bottoms from the recovery of these spent solvents and spent solvent mixtures	(T)
F002	The following spent halogenated solvents: Tetrachloroethylene, methylene chloride, trichloroethylene, 1,1,1-trichloroethane, chlorobenzene, 1,1,2-trichloro-1,2,2-trifluoroethane, ortho-dichlorobenzene, trichlorofluoromethane, and 1,1,2-trichloroethane; all spent solvent mixtures/blends	(T)

	containing, before use, a total of ten percent or more (by volume) of one or more of the above halogenated solvents or those listed in F001, F004, or F005; and still bottoms from the recovery of these spent solvents and spent solvent mixtures	
F003	The following spent non-halogenated solvents: Xylene, acetone, ethyl acetate, ethyl benzene, ethyl ether, methyl isobutyl ketone, n-butyl alcohol, cyclohexanone, and methanol; all spent solvent mixtures/blends containing, before use, only the above spent non-halogenated solvents; and all spent solvent mixtures/blends containing, before use, one or more of the above non-halogenated solvents, and, a total of ten percent or more (by volume) of one or more of those solvents listed in F001, F002, F004, and F005; and still bottoms from the recovery of these spent solvents and spent solvent mixtures	(I)*
F004	The following spent non-halogenated solvents: Cresols and cresylic acid, and nitrobenzene; all spent solvent mixtures/blends containing, before use, a total of ten percent or more (by volume) of one or more of the above non-halogenated solvents or those solvents listed in F001, F002, and F005; and still bottoms from the recovery of these spent solvents and spent solvent mixtures	(T)
F005	The following spent non-halogenated solvents: Toluene, methyl ethyl ketone, carbon disulfide, isobutanol, pyridine, benzene, 2-ethoxyethanol, and 2-nitropropane; all spent solvent mixtures/blends containing, before use, a total of ten percent or more (by volume) of one or more of the above non-halogenated solvents or those solvents listed in F001, F002, or F004; and still bottoms from the recovery of these spent solvents and spent solvent mixtures	(I,T)
F006	Wastewater treatment sludges from electroplating operations except from the following processes: (1) Sulfuric acid anodizing of aluminum; (2) tin plating on carbon steel; (3) zinc plating (segregated basis) on carbon steel; (4) aluminum or zinc-aluminum plating on carbon steel; (5) cleaning/stripping associated with tin, zinc and aluminum plating on carbon steel; and (6) chemical etching and milling of aluminum	(T)
F007	Spent cyanide plating bath solutions from electroplating operations	(R, T)
F008	Plating bath residues from the bottom of plating baths from electroplating operations where cyanides are used in the process	(R, T)
F009	Spent stripping and cleaning bath solutions from	(R, T)

	electroplating operations where cyanides are used in the process	
F010	Quenching bath residues from oil baths from metal heat treating operations where cyanides are used in the process	(R, T)
F011	Spent cyanide solutions from salt bath pot cleaning from metal heat treating operations	(R, T)
F012	Quenching waste water treatment sludges from metal heat treating operations where cyanides are used in the process	(T)
F019	Wastewater treatment sludges from the chemical conversion coating of aluminum except from zirconium phosphating in aluminum can washing when such phosphating is an exclusive conversion coating process. Wastewater treatment sludges from the manufacturing of motor vehicles using a zinc phosphating process will not be subject to this listing at the point of generation if the wastes are not placed outside on the land prior to shipment to a landfill for disposal and are either: disposed in a Subtitle D municipal or industrial landfill unit that is equipped with a single clay liner and is permitted, licensed or otherwise authorized by the state; or disposed in a landfill unit subject to, or otherwise meeting, the landfill requirements in §258.40, §264.301 or §265.301. For the purposes of this listing, motor vehicle manufacturing is defined in paragraph (b)(4)(i) of this section and (b)(4)(ii) of this section describes the recordkeeping requirements for motor vehicle manufacturing facilities	(T)
F020	Wastes (except wastewater and spent carbon from hydrogen chloride purification) from the production or manufacturing use (as a reactant, chemical intermediate, or component in a formulating process) of tri- or tetrachlorophenol, or of intermediates used to produce their pesticide derivatives. (This listing does not include wastes from the production of Hexachlorophene from highly purified 2,4,5-trichlorophenol.)	(H)
F021	Wastes (except wastewater and spent carbon from hydrogen chloride purification) from the production or manufacturing use (as a reactant, chemical intermediate, or component in a formulating process) of pentachlorophenol, or of intermediates used to produce its derivatives	(H)
F022	Wastes (except wastewater and spent carbon from hydrogen chloride purification) from the manufacturing use (as a reactant, chemical intermediate, or component in a formulating process) of tetra-, penta-, or hexachlorobenzenes under alkaline conditions	(H)

F023	Wastes (except wastewater and spent carbon from hydrogen chloride purification) from the production of materials on equipment previously used for the production or manufacturing use (as a reactant, chemical intermediate, or component in a formulating process) of tri- and tetrachlorophenols. (This listing does not include wastes from equipment used only for the production or use of Hexachlorophene from highly purified 2,4,5-trichlorophenol.)	(H)
F024	Process wastes, including but not limited to, distillation residues, heavy ends, tars, and reactor clean-out wastes, from the production of certain chlorinated aliphatic hydrocarbons by free radical catalyzed processes. These chlorinated aliphatic hydrocarbons are those having carbon chain lengths ranging from one to and including five, with varying amounts and positions of chlorine substitution. (This listing does not include wastewaters, wastewater treatment sludges, spent catalysts, and wastes listed in §261.31 or §261.32.)	(T)
F025	Condensed light ends, spent filters and filter aids, and spent desiccant wastes from the production of certain chlorinated aliphatic hydrocarbons, by free radical catalyzed processes. These chlorinated aliphatic hydrocarbons are those having carbon chain lengths ranging from one to and including five, with varying amounts and positions of chlorine substitution	(T)
F026	Wastes (except wastewater and spent carbon from hydrogen chloride purification) from the production of materials on equipment previously used for the manufacturing use (as a reactant, chemical intermediate, or component in a formulating process) of tetra-, penta-, or hexachlorobenzene under alkaline conditions	(H)
F027	Discarded unused formulations containing tri-, tetra-, or pentachlorophenol or discarded unused formulations containing compounds derived from these chlorophenols. (This listing does not include formulations containing Hexachlorophene sythesized from prepurified 2,4,5-trichlorophenol as the sole component.)	(H)
F028	Residues resulting from the incineration or thermal treatment of soil contaminated with EPA Hazardous Waste Nos. F020, F021, F022, F023, F026, and F027	(T)
F032	Wastewaters (except those that have not come into contact with process contaminants), process residuals, preservative drippage, and spent formulations from wood preserving processes generated at plants that currently use or have previously used chlorophenolic	(T)

	formulations (except potentially cross-contaminated wastes that have had the F032 waste code deleted in accordance with §261.35 of this chapter or potentially cross-contaminated wastes that are otherwise currently regulated as hazardous wastes (i.e., F034 or F035), and where the generator does not resume or initiate use of chlorophenolic formulations). This listing does not include K001 bottom sediment sludge from the treatment of wastewater from wood preserving processes that use creosote and/or pentachlorophenol	
F034	Wastewaters (except those that have not come into contact with process contaminants), process residuals, preservative drippage, and spent formulations from wood preserving processes generated at plants that use creosote formulations. This listing does not include K001 bottom sediment sludge from the treatment of wastewater from wood preserving processes that use creosote and/or pentachlorophenol	(T)
F035	Wastewaters (except those that have not come into contact with process contaminants), process residuals, preservative drippage, and spent formulations from wood preserving processes generated at plants that use inorganic preservatives containing arsenic or chromium. This listing does not include K001 bottom sediment sludge from the treatment of wastewater from wood preserving processes that use creosote and/or pentachlorophenol	(T)
F037	Petroleum refinery primary oil/water/solids separation sludge—Any sludge generated from the gravitational separation of oil/water/solids during the storage or treatment of process wastewaters and oil cooling wastewaters from petroleum refineries. Such sludges include, but are not limited to, those generated in oil/water/solids separators; tanks and impoundments; ditches and other conveyances; sumps; and stormwater units receiving dry weather flow. Sludge generated in stormwater units that do not receive dry weather flow, sludges generated from non-contact once-through cooling waters segregated for treatment from other process or oily cooling waters, sludges generated in aggressive biological treatment units as defined in §261.31(b)(2) (including sludges generated in one or more additional units after wastewaters have been treated in aggressive biological treatment units) and K051 wastes are not included in this listing. This listing does include residuals generated from processing or recycling oil-bearing hazardous secondary materials excluded under §261.4(a)(12)(i), if those residuals are to be disposed of.	(T)

F038	Petroleum refinery secondary (emulsified) oil/water/solids separation sludge—Any sludge and/or float generated from the physical and/or chemical separation of oil/water/solids in process wastewaters and oily cooling wastewaters from petroleum refineries. Such wastes include, but are not limited to, all sludges and floats generated in: induced air flotation (IAF) units, tanks and impoundments, and all sludges generated in DAF units. Sludges generated in stormwater units that do not receive dry weather flow, sludges generated from non-contact once-through cooling waters segregated for treatment from other process or oily cooling waters, sludges and floats generated in aggressive biological treatment units as defined in §261.31(b)(2) (including sludges and floats generated in one or more additional units after wastewaters have been treated in aggressive biological treatment units) and F037, K048, and K051 wastes are not included in this listing	(T)
F039	Leachate (liquids that have percolated through land disposed wastes) resulting from the disposal of more than one restricted waste classified as hazardous under subpart D of this part. (Leachate resulting from the disposal of one or more of the following EPA Hazardous Wastes and no other Hazardous Wastes retains its EPA Hazardous Waste Number(s): F020, F021, F022, F026, F027, and/or F028.)	(T)

*(I,T) should be used to specify mixtures that are ignitable and contain toxic constituents.

(b) Listing Specific Definitions: (1) For the purposes of the F037 and F038 listings, oil/water/solids is defined as oil and/or water and/or solids.(2) (i) For the purposes of the F037 and F038 listings, aggressive biological treatment units are defined as units which employ one of the following four treatment methods: activated sludge; trickling filter; rotating biological contactor for the continuous accelerated biological oxidation of wastewaters; or high-rate aeration. High-rate aeration is a system of surface impoundments or tanks, in which intense mechanical aeration is used to completely mix the wastes, enhance biological activity, and (A) the units employ a minimum of 6 hp per million gallons of treatment volume; and either (B) the hydraulic retention time of the unit is no longer than 5 days; or (C) the hydraulic retention time is no longer than 30 days and the unit does not generate a sludge that is a hazardous waste by the Toxicity Characteristic.

(ii) Generators and treatment, storage and disposal facilities have the burden of proving that their sludges are exempt from listing as F037 and F038 wastes under this definition. Generators and treatment, storage and disposal facilities must maintain, in their operating or other onsite records, documents and data sufficient to prove that: (A) the unit is an aggressive biological treatment unit as defined in this subsection; and (B) the sludges sought to be exempted from the definitions of F037 and/or F038 were actually generated in the aggressive biological treatment unit.

(3) (i) For the purposes of the F037 listing, sludges are considered to be generated at the moment of deposition in the unit, where deposition is defined as at least a temporary cessation of lateral particle movement.

(ii) For the purposes of the F038 listing, (A) sludges are considered to be generated at the moment of deposition in the unit, where deposition is defined as at least a temporary cessation of lateral particle movement and (B) floats are considered to be generated at the moment they are formed in the top of the unit.

(4) For the purposes of the F019 listing, the following apply to wastewater treatment sludges from the manufacturing of motor vehicles using a zinc phosphating process.

(i) Motor vehicle manufacturing is defined to include the manufacture of automobiles and light trucks/utility vehicles (including light duty vans, pick-up trucks, minivans, and sport utility vehicles). Facilities must be engaged in manufacturing complete vehicles (body and chassis or unibody) or chassis only.

(ii) Generators must maintain in their on-site records documentation and information sufficient to prove that the wastewater treatment sludges to be exempted from the F019 listing meet the conditions of the listing. These records must include: the volume of waste generated and disposed of off site; documentation showing when the waste volumes were generated and sent off site; the name and address of the receiving facility; and documentation confirming receipt of the waste by the receiving facility. Generators must maintain these documents on site for no less than three years. The retention period for the documentation is automatically extended during the course of any enforcement action or as requested by the Regional Administrator or the state regulatory authority.

[46 FR 4617, Jan. 16, 1981]

Editorial Note: ForFederal Registercitations affecting §261.31, see the List of CFR Sections Affected, which appears in the Finding Aids section of the printed volume and on GPO Access.

§ 261.32 Hazardous wastes from specific sources.

top

(a)The following solid wastes are listed hazardous wastes from specific sources unless they are excluded under §§260.20 and 260.22 and listed in appendix IX.

Industry and EPA hazardous waste No.	Hazardous waste	Hazard code
Wood preservation: K001	Bottom sediment sludge from the treatment of wastewaters from wood preserving processes that use creosote and/or pentachlorophenol	(T)
Inorganic pigments:		
K002	Wastewater treatment sludge from the production of chrome yellow and orange pigments	(T)
K003	Wastewater treatment sludge from the production of molybdate orange pigments	(T)
K004	Wastewater treatment sludge from the production of zinc yellow pigments	(T)
K005	Wastewater treatment sludge from the production of chrome green pigments	(T)
K006	Wastewater treatment sludge from the production of chrome oxide green pigments (anhydrous and hydrated)	(T)
K007	Wastewater treatment sludge from the production of iron blue pigments	(T)
K008	Oven residue from the production of chrome oxide green pigments	(T)

Organic chemicals:		
K009	Distillation bottoms from the production of acetaldehyde from ethylene	(T)
K010	Distillation side cuts from the production of acetaldehyde from ethylene	(T)
K011	Bottom stream from the wastewater stripper in the production of acrylonitrile	(R, T)
K013	Bottom stream from the acetonitrile column in the production of acrylonitrile	(R, T)
K014	Bottoms from the acetonitrile purification column in the production of acrylonitrile	(T)
K015	Still bottoms from the distillation of benzyl chloride	(T)
K016	Heavy ends or distillation residues from the production of carbon tetrachloride	(T)
K017	Heavy ends (still bottoms) from the purification column in the production of epichlorohydrin	(T)
K018	Heavy ends from the fractionation column in ethyl chloride production	(T)
K019	Heavy ends from the distillation of ethylene dichloride in ethylene dichloride production	(T)
K020	Heavy ends from the distillation of vinyl chloride in vinyl chloride monomer production	(T)
K021	Aqueous spent antimony catalyst waste from fluoromethanes production	(T)
K022	Distillation bottom tars from the production of phenol/acetone from cumene	(T)
K023	Distillation light ends from the production of phthalic anhydride from naphthalene	(T)
K024	Distillation bottoms from the production of phthalic anhydride from naphthalene	(T)
K025	Distillation bottoms from the production of nitrobenzene by the nitration of benzene	(T)
K026	Stripping still tails from the production of methy ethyl pyridines	(T)
K027	Centrifuge and distillation residues from toluene diisocyanate production	(R, T)
K028	Spent catalyst from the hydrochlorinator reactor in the production of 1,1,1-trichloroethane	(T)
K029	Waste from the product steam stripper in the production of 1,1,1-trichloroethane	(T)
K030	Column bottoms or heavy ends from the combined production of trichloroethylene and perchloroethylene	(T)

K083	Distillation bottoms from aniline production	(T)
K085	Distillation or fractionation column bottoms from the production of chlorobenzenes	(T)
K093	Distillation light ends from the production of phthalic anhydride from ortho-xylene	(T)
K094	Distillation bottoms from the production of phthalic anhydride from ortho-xylene	(T)
K095	Distillation bottoms from the production of 1,1,1-trichloroethane	(T)
K096	Heavy ends from the heavy ends column from the production of 1,1,1-trichloroethane	(T)
K103	Process residues from aniline extraction from the production of aniline	(T)
K104	Combined wastewater streams generated from nitrobenzene/aniline production	(T)
K105	Separated aqueous stream from the reactor product washing step in the production of chlorobenzenes	(T)
K107	Column bottoms from product separation from the production of 1,1-dimethylhydrazine (UDMH) from carboxylic acid hydrazines	(C,T)
K108	Condensed column overheads from product separation and condensed reactor vent gases from the production of 1,1-dimethylhydrazine (UDMH) from carboxylic acid hydrazides	(I,T)
K109	Spent filter cartridges from product purification from the production of 1,1-dimethylhydrazine (UDMH) from carboxylic acid hydrazides	(T)
K110	Condensed column overheads from intermediate separation from the production of 1,1-dimethylhydrazine (UDMH) from carboxylic acid hydrazides	(T)
K111	Product washwaters from the production of dinitrotoluene via nitration of toluene	(C,T)
K112	Reaction by-product water from the drying column in the production of toluenediamine via hydrogenation of dinitrotoluene	(T)
K113	Condensed liquid light ends from the purification of toluenediamine in the production of toluenediamine via hydrogenation of dinitrotoluene	(T)
K114	Vicinals from the purification of toluenediamine in the production of toluenediamine via hydrogenation of dinitrotoluene	(T)
K115	Heavy ends from the purification of toluenediamine in the production of toluenediamine via hydrogenation of dinitrotoluene	(T)

K116	Organic condensate from the solvent recovery column in the production of toluene diisocyanate via phosgenation of toluenediamine	(T)
K117	Wastewater from the reactor vent gas scrubber in the production of ethylene dibromide via bromination of ethene	(T)
K118	Spent adsorbent solids from purification of ethylene dibromide in the production of ethylene dibromide via bromination of ethene	(T)
K136	Still bottoms from the purification of ethylene dibromide in the production of ethylene dibromide via bromination of ethene	(T)
K149	Distillation bottoms from the production of alpha- (or methyl-) chlorinated toluenes, ring-chlorinated toluenes, benzoyl chlorides, and compounds with mixtures of these functional groups, (This waste does not include still bottoms from the distillation of benzyl chloride.)	(T)
K150	Organic residuals, excluding spent carbon adsorbent, from the spent chlorine gas and hydrochloric acid recovery processes associated with the production of alpha- (or methyl-) chlorinated toluenes, ring-chlorinated toluenes, benzoyl chlorides, and compounds with mixtures of these functional groups	(T)
K151	Wastewater treatment sludges, excluding neutralization and biological sludges, generated during the treatment of wastewaters from the production of alpha- (or methyl-) chlorinated toluenes, ring-chlorinated toluenes, benzoyl chlorides, and compounds with mixtures of these functional groups	(T)
K156	Organic waste (including heavy ends, still bottoms, light ends, spent solvents, filtrates, and decantates) from the production of carbamates and carbamoyl oximes. (This listing does not apply to wastes generated from the manufacture of 3-iodo-2-propynyl n-butylcarbamate.)	(T)
K157	Wastewaters (including scrubber waters, condenser waters, washwaters, and separation waters) from the production of carbamates and carbamoyl oximes. (This listing does not apply to wastes generated from the manufacture of 3-iodo-2-propynyl n-butylcarbamate.)	(T)
K158	Bag house dusts and filter/separation solids from the production of carbamates and carbamoyl oximes. (This listing does not apply to wastes	(T)

	generated from the manufacture of 3-iodo-2-propynyl n-butylcarbamate.)	
K159	Organics from the treatment of thiocarbamate wastes	(T)
K161	Purification solids (including filtration, evaporation, and centrifugation solids), bag house dust and floor sweepings from the production of dithiocarbamate acids and their salts. (This listing does not include K125 or K126.)	(R,T)
K174	Wastewater treatment sludges from the production of ethylene dichloride or vinyl chloride monomer (including sludges that result from commingled ethylene dichloride or vinyl chloride monomer wastewater and other wastewater), unless the sludges meet the following conditions: (i) they are disposed of in a subtitle C or non-hazardous landfill licensed or permitted by the state or federal government; (ii) they are not otherwise placed on the land prior to final disposal; and (iii) the generator maintains documentation demonstrating that the waste was either disposed of in an on-site landfill or consigned to a transporter or disposal facility that provided a written commitment to dispose of the waste in an off-site landfill. Respondents in any action brought to enforce the requirements of subtitle C must, upon a showing by the government that the respondent managed wastewater treatment sludges from the production of vinyl chloride monomer or ethylene dichloride, demonstrate that they meet the terms of the exclusion set forth above. In doing so, they must provide appropriate documentation (e.g., contracts between the generator and the landfill owner/operator, invoices documenting delivery of waste to landfill, etc.) that the terms of the exclusion were met	(T)
K175	Wastewater treatment sludges from the production of vinyl chloride monomer using mercuric chloride catalyst in an acetylene-based process	(T)
K181	Nonwastewaters from the production of dyes and/or pigments (including nonwastewaters commingled at the point of generation with nonwastewaters from other processes) that, at the point of generation, contain mass loadings of any of the constituents identified in paragraph (c) of this section that are equal to or greater than the corresponding paragraph (c) levels, as determined on a calendar year basis. These wastes will not be	(T)

	hazardous if the nonwastewaters are: (i) disposed in a Subtitle D landfill unit subject to the design criteria in §258.40, (ii) disposed in a Subtitle C landfill unit subject to either §264.301 or §265.301, (iii) disposed in other Subtitle D landfill units that meet the design criteria in §258.40, §264.301, or §265.301, or (iv) treated in a combustion unit that is permitted under Subtitle C, or an onsite combustion unit that is permitted under the Clean Air Act. For the purposes of this listing, dyes and/or pigments production is defined in paragraph (b)(1) of this section. Paragraph (d) of this section describes the process for demonstrating that a facility's nonwastewaters are not K181. This listing does not apply to wastes that are otherwise identified as hazardous under §§261.21–261.24 and 261.31–261.33 at the point of generation. Also, the listing does not apply to wastes generated before any annual mass loading limit is met	
Inorganic chemicals:		
K071	Brine purification muds from the mercury cell process in chlorine production, where separately prepurified brine is not used	(T)
K073	Chlorinated hydrocarbon waste from the purification step of the diaphragm cell process using graphite anodes in chlorine production	(T)
K106	Wastewater treatment sludge from the mercury cell process in chlorine production	(T)
K176	Baghouse filters from the production of antimony oxide, including filters from the production of intermediates (e.g., antimony metal or crude antimony oxide)	(E)
K177	Slag from the production of antimony oxide that is speculatively accumulated or disposed, including slag from the production of intermediates (e.g., antimony metal or crude antimony oxide)	(T)
K178	Residues from manufacturing and manufacturing-site storage of ferric chloride from acids formed during the production of titanium dioxide using the chloride-ilmenite process	(T)
Pesticides:		
K031	By-product salts generated in the production of MSMA and cacodylic acid	(T)
K032	Wastewater treatment sludge from the production of chlordane	(T)

EPAPA011000057

K033	Wastewater and scrub water from the chlorination of cyclopentadiene in the production of chlordane	(T)
K034	Filter solids from the filtration of hexachlorocyclopentadiene in the production of chlordane	(T)
K035	Wastewater treatment sludges generated in the production of creosote	(T)
K036	Still bottoms from toluene reclamation distillation in the production of disulfoton	(T)
K037	Wastewater treatment sludges from the production of disulfoton	(T)
K038	Wastewater from the washing and stripping of phorate production	(T)
K039	Filter cake from the filtration of diethylphosphorodithioic acid in the production of phorate	(T)
K040	Wastewater treatment sludge from the production of phorate	(T)
K041	Wastewater treatment sludge from the production of toxaphene	(T)
K042	Heavy ends or distillation residues from the distillation of tetrachlorobenzene in the production of 2,4,5-T	(T)
K043	2,6-Dichlorophenol waste from the production of 2,4-D	(T)
K097	Vacuum stripper discharge from the chlordane chlorinator in the production of chlordane	(T)
K098	Untreated process wastewater from the production of toxaphene	(T)
K099	Untreated wastewater from the production of 2,4-D	(T)
K123	Process wastewater (including supernates, filtrates, and washwaters) from the production of ethylenebisdithiocarbamic acid and its salt	(T)
K124	Reactor vent scrubber water from the production of ethylenebisdithiocarbamic acid and its salts	(C, T)
K125	Filtration, evaporation, and centrifugation solids from the production of ethylenebisdithiocarbamic acid and its salts	(T)
K126	Baghouse dust and floor sweepings in milling and packaging operations from the production or formulation of ethylenebisdithiocarbamic acid and its salts	(T)
K131	Wastewater from the reactor and spent sulfuric acid from the acid dryer from the production of methyl bromide	(C, T)

K132	Spent absorbent and wastewater separator solids from the production of methyl bromide	(T)
Explosives:		
K044	Wastewater treatment sludges from the manufacturing and processing of explosives	(R)
K045	Spent carbon from the treatment of wastewater containing explosives	(R)
K046	Wastewater treatment sludges from the manufacturing, formulation and loading of lead-based initiating compounds	(T)
K047	Pink/red water from TNT operations	(R)
Petroleum refining:		
K048	Dissolved air flotation (DAF) float from the petroleum refining industry	(T)
K049	Slop oil emulsion solids from the petroleum refining industry	(T)
K050	Heat exchanger bundle cleaning sludge from the petroleum refining industry	(T)
K051	API separator sludge from the petroleum refining industry	(T)
K052	Tank bottoms (leaded) from the petroleum refining industry	(T)
K169	Crude oil storage tank sediment from petroleum refining operations	(T)
K170	Clarified slurry oil tank sediment and/or in-line filter/separation solids from petroleum refining operations	(T)
K171	Spent Hydrotreating catalyst from petroleum refining operations, including guard beds used to desulfurize feeds to other catalytic reactors (this listing does not include inert support media)	(I,T)
K172	Spent Hydrorefining catalyst from petroleum refining operations, including guard beds used to desulfurize feeds to other catalytic reactors (this listing does not include inert support media)	(I,T)
Iron and steel:		
K061	Emission control dust/sludge from the primary production of steel in electric furnaces	(T)
K062	Spent pickle liquor generated by steel finishing operations of facilities within the iron and steel industry (SIC Codes 331 and 332)	(C,T)
Primary copper:		
Primary lead:		
Primary zinc:		

Primary aluminum:		
K088	Spent potliners from primary aluminum reduction	(T)
Ferroalloys:		
Secondary lead:		
K069	Emission control dust/sludge from secondary lead smelting. (Note: This listing is stayed administratively for sludge generated from secondary acid scrubber systems. The stay will remain in effect until further administrative action is taken. If EPA takes further action effecting this stay, EPA will publish a notice of the action in the**Federal Register**)	(T)
K100	Waste leaching solution from acid leaching of emission control dust/sludge from secondary lead smelting	(T)
Veterinary pharmaceuticals:		
K084	Wastewater treatment sludges generated during the production of veterinary pharmaceuticals from arsenic or organo-arsenic compounds	(T)
K101	Distillation tar residues from the distillation of aniline-based compounds in the production of veterinary pharmaceuticals from arsenic or organo-arsenic compounds	(T)
K102	Residue from the use of activated carbon for decolorization in the production of veterinary pharmaceuticals from arsenic or organo-arsenic compounds	(T)
Ink formulation:		
K086	Solvent washes and sludges, caustic washes and sludges, or water washes and sludges from cleaning tubs and equipment used in the formulation of ink from pigments, driers, soaps, and stabilizers containing chromium and lead	(T)
Coking:		
K060	Ammonia still lime sludge from coking operations	(T)
K087	Decanter tank tar sludge from coking operations	(T)
K141	Process residues from the recovery of coal tar, including, but not limited to, collecting sump residues from the production of coke from coal or the recovery of coke by-products produced from coal. This listing does not include K087 (decanter tank tar sludges from coking operations)	(T)
K142	Tar storage tank residues from the production of coke from coal or from the recovery of coke by-	(T)

	products produced from coal	
K143	Process residues from the recovery of light oil, including, but not limited to, those generated in stills, decanters, and wash oil recovery units from the recovery of coke by-products produced from coal	(T)
K144	Wastewater sump residues from light oil refining, including, but not limited to, intercepting or contamination sump sludges from the recovery of coke by-products produced from coal	(T)
K145	Residues from naphthalene collection and recovery operations from the recovery of coke by-products produced from coal	(T)
K147	Tar storage tank residues from coal tar refining	(T)
K148	Residues from coal tar distillation, including but not limited to, still bottoms	(T)

(b) *Listing Specific Definitions:* (1) For the purposes of the K181 listing, dyes and/or pigments production is defined to include manufacture of the following product classes: dyes, pigments, or FDA certified colors that are classified as azo, triarylmethane, perylene or anthraquinone classes. Azo products include azo, monoazo, diazo, triazo, polyazo, azoic, benzidine, and pyrazolone products. Triarylmethane products include both triarylmethane and triphenylmethane products. Wastes that are not generated at a dyes and/or pigments manufacturing site, such as wastes from the offsite use, formulation, and packaging of dyes and/or pigments, are not included in the K181 listing.

(c) *K181 Listing Levels.* Nonwastewaters containing constituents in amounts equal to or exceeding the following levels during any calendar year are subject to the K181 listing, unless the conditions in the K181 listing are met.

Constituent	Chemical abstracts No.	Mass levels (kg/yr)
Aniline	62–53–3	9,300
o-Anisidine	90–04–0	110
4-Chloroaniline	106–47–8	4,800
p-Cresidine	120–71–8	660
2,4-Dimethylaniline	95–68–1	100
1,2-Phenylenediamine	95–54–5	710
1,3-Phenylenediamine	108–45–2	1,200

(d) *Procedures for demonstrating that dyes and/or pigment nonwastewaters are not K181.* The procedures described in paragraphs (d)(1)–(d)(3) and (d)(5) of this section establish when nonwastewaters from the production of dyes/pigments would not be hazardous (these procedures apply to wastes that are not disposed in landfill units or treated in combustion units as specified in paragraph (a) of this section). If the nonwastewaters are disposed in landfill units or treated in combustion units as described in paragraph (a) of this section, then the nonwastewaters are not hazardous. In order to demonstrate that it is meeting the landfill disposal or combustion conditions contained in the K181 listing description, the generator must maintain documentation as described in paragraph (d)(4) of this section.

(1) *Determination based on no K181 constituents.* Generators that have knowledge (e.g., knowledge of constituents in wastes based on prior sampling and analysis data and/or information about raw materials used, production processes used, and reaction and degradation products formed) that their wastes

contain none of the K181 constituents (*see* paragraph (c) of this section) can use their knowledge to determine that their waste is not K181. The generator must document the basis for all such determinations on an annual basis and keep each annual documentation for three years.

(2) *Determination for generated quantities of 1,000 MT/yr or less for wastes that contain K181 constituents.* If the total annual quantity of dyes and/or pigment nonwastewaters generated is 1,000 metric tons or less, the generator can use knowledge of the wastes (e.g., knowledge of constituents in wastes based on prior analytical data and/or information about raw materials used, production processes used, and reaction and degradation products formed) to conclude that annual mass loadings for the K181 constituents are below the listing levels of paragraph (c) of this section. To make this determination, the generator must:

(i) Each year document the basis for determining that the annual quantity of nonwastewaters expected to be generated will be less than 1,000 metric tons.

(ii) Track the actual quantity of nonwastewaters generated from January 1 through December 31 of each year. If, at any time within the year, the actual waste quantity exceeds 1,000 metric tons, the generator must comply with the requirements of paragraph (d)(3) of this section for the remainder of the year.

(iii) Keep a running total of the K181 constituent mass loadings over the course of the calendar year.

(iv) Keep the following records on site for the three most recent calendar years in which the hazardous waste determinations are made:

(A) The quantity of dyes and/or pigment nonwastewaters generated.

(B) The relevant process information used.

(C) The calculations performed to determine annual total mass loadings for each K181 constituent in the nonwastewaters during the year.

(3) *Determination for generated quantities greater than 1,000 MT/yr for wastes that contain K181 constituents.* If the total annual quantity of dyes and/or pigment nonwastewaters generated is greater than 1,000 metric tons, the generator must perform all of the steps described in paragraphs ((d)(3)(i)–(d)(3)(xi) of this section) in order to make a determination that its waste is not K181.

(i) Determine which K181 constituents (see paragraph (c) of this section) are reasonably expected to be present in the wastes based on knowledge of the wastes (e.g., based on prior sampling and analysis data and/or information about raw materials used, production processes used, and reaction and degradation products formed).

(ii) If 1,2-phenylenediamine is present in the wastes, the generator can use either knowledge or sampling and analysis procedures to determine the level of this constituent in the wastes. For determinations based on use of knowledge, the generator must comply with the procedures for using knowledge described in paragraph (d)(2) of this section and keep the records described in paragraph (d)(2)(iv) of this section. For determinations based on sampling and analysis, the generator must comply with the sampling and analysis and recordkeeping requirements described below in this section.

(iii) Develop a waste sampling and analysis plan (or modify an existing plan) to collect and analyze representative waste samples for the K181 constituents reasonably expected to be present in the wastes. At a minimum, the plan must include:

(A) A discussion of the number of samples needed to characterize the wastes fully;

(B) The planned sample collection method to obtain representative waste samples;

(C) A discussion of how the sampling plan accounts for potential temporal and spatial variability of the wastes.

(D) A detailed description of the test methods to be used, including sample preparation, clean up (if

necessary), and determinative methods.

(iv) Collect and analyze samples in accordance with the waste sampling and analysis plan.

(A) The sampling and analysis must be unbiased, precise, and representative of the wastes.

(B) The analytical measurements must be sufficiently sensitive, accurate and precise to support any claim that the constituent mass loadings are below the listing levels of paragraph (c) of this section.

(v) Record the analytical results.

(vi) Record the waste quantity represented by the sampling and analysis results.

(vii) Calculate constituent-specific mass loadings (product of concentrations and waste quantity).

(viii) Keep a running total of the K181 constituent mass loadings over the course of the calendar year.

(ix) Determine whether the mass of any of the K181 constituents listed in paragraph (c) of this section generated between January 1 and December 31 of any year is below the K181 listing levels.

(x) Keep the following records on site for the three most recent calendar years in which the hazardous waste determinations are made:

(A) The sampling and analysis plan.

(B) The sampling and analysis results (including QA/QC data)

(C) The quantity of dyes and/or pigment nonwastewaters generated.

(D) The calculations performed to determine annual mass loadings.

(xi) Nonhazardous waste determinations must be conducted annually to verify that the wastes remain nonhazardous.

(A) The annual testing requirements are suspended after three consecutive successful annual demonstrations that the wastes are nonhazardous. The generator can then use knowledge of the wastes to support subsequent annual determinations.

(B) The annual testing requirements are reinstated if the manufacturing or waste treatment processes generating the wastes are significantly altered, resulting in an increase of the potential for the wastes to exceed the listing levels.

(C) If the annual testing requirements are suspended, the generator must keep records of the process knowledge information used to support a nonhazardous determination. If testing is reinstated, a description of the process change must be retained.

(4) *Recordkeeping for the landfill disposal and combustion exemptions.* For the purposes of meeting the landfill disposal and combustion condition set out in the K181 listing description, the generator must maintain on site for three years documentation demonstrating that each shipment of waste was received by a landfill unit that is subject to or meets the landfill design standards set out in the listing description, or was treated in combustion units as specified in the listing description.

(5) *Waste holding and handling.* During the interim period, from the point of generation to completion of the hazardous waste determination, the generator is responsible for storing the wastes appropriately. If the wastes are determined to be hazardous and the generator has not complied with the subtitle C requirements during the interim period, the generator could be subject to an enforcement action for improper management.

[46 FR 4618, Jan. 16, 1981]

Editorial Note: ForFederal Registercitations affecting §261.32, see the List of CFR Sections Affected, which appears in the Finding Aids section of the printed volume and on GPO Access.

§ 261.33 Discarded commercial chemical products, off-specification species, container residues, and spill residues thereof.

top

The following materials or items are hazardous wastes if and when they are discarded or intended to be discarded as described in §261.2(a)(2)(i), when they are mixed with waste oil or used oil or other material and applied to the land for dust suppression or road treatment, when they are otherwise applied to the land in lieu of their original intended use or when they are contained in products that are applied to the land in lieu of their original intended use, or when, in lieu of their original intended use, they are produced for use as (or as a component of) a fuel, distributed for use as a fuel, or burned as a fuel.

(a) Any commercial chemical product, or manufacturing chemical intermediate having the generic name listed in paragraph (e) or (f) of this section.

(b) Any off-specification commercial chemical product or manufacturing chemical intermediate which, if it met specifications, would have the generic name listed in paragraph (e) or (f) of this section.

(c) Any residue remaining in a container or in an inner liner removed from a container that has held any commercial chemical product or manufacturing chemical intermediate having the generic name listed in paragraphs (e) or (f) of this section, unless the container is empty as defined in §261.7(b) of this chapter.

[*Comment:* Unless the residue is being beneficially used or reused, or legitimately recycled or reclaimed; or being accumulated, stored, transported or treated prior to such use, re-use, recycling or reclamation, EPA considers the residue to be intended for discard, and thus, a hazardous waste. An example of a legitimate re-use of the residue would be where the residue remains in the container and the container is used to hold the same commercial chemical product or manufacturing chemical intermediate it previously held. An example of the discard of the residue would be where the drum is sent to a drum reconditioner who reconditions the drum but discards the residue.]

(d) Any residue or contaminated soil, water or other debris resulting from the cleanup of a spill into or on any land or water of any commercial chemical product or manufacturing chemical intermediate having the generic name listed in paragraph (e) or (f) of this section, or any residue or contaminated soil, water or other debris resulting from the cleanup of a spill, into or on any land or water, of any off-specification chemical product and manufacturing chemical intermediate which, if it met specifications, would have the generic name listed in paragraph (e) or (f) of this section.

[*Comment:* The phrase "commercial chemical product or manufacturing chemical intermediate having the generic name listed in . . ." refers to a chemical substance which is manufactured or formulated for commercial or manufacturing use which consists of the commercially pure grade of the chemical, any technical grades of the chemical that are produced or marketed, and all formulations in which the chemical is the sole active ingredient. It does not refer to a material, such as a manufacturing process waste, that contains any of the substances listed in paragraph (e) or (f). Where a manufacturing process waste is deemed to be a hazardous waste because it contains a substance listed in paragraph (e) or (f), such waste will be listed in either §261.31 or §261.32 or will be identified as a hazardous waste by the characteristics set forth in subpart C of this part.]

(e) The commercial chemical products, manufacturing chemical intermediates or off-specification commercial chemical products or manufacturing chemical intermediates referred to in paragraphs (a) through (d) of this section, are identified as acute hazardous wastes (H) and are subject to the small quantity exclusion defined in §261.5(e).

[*Comment:* For the convenience of the regulated community the primary hazardous properties of these materials have been indicated by the letters T (Toxicity), and R (Reactivity). Absence of a letter indicates that the compound only is listed for acute toxicity. Wastes are first listed in alphabetical order by substance and then listed again in numerical order by Hazardous Waste Number.]

These wastes and their corresponding EPA Hazardous Waste Numbers are:

Hazardous waste No.	Chemical abstracts No.	Substance
P023	107–20–0	Acetaldehyde, chloro-
P002	591–08–2	Acetamide, N-(aminothioxomethyl)-
P057	640–19–7	Acetamide, 2-fluoro-
P058	62–74–8	Acetic acid, fluoro-, sodium salt
P002	591–08–2	1-Acetyl-2-thiourea
P003	107–02–8	Acrolein
P070	116–06–3	Aldicarb
P203	1646–88–4	Aldicarb sulfone.
P004	309–00–2	Aldrin
P005	107–18–6	Allyl alcohol
P006	20859–73–8	Aluminum phosphide (R,T)
P007	2763–96–4	5-(Aminomethyl)-3-isoxazolol
P008	504–24–5	4-Aminopyridine
P009	131–74–8	Ammonium picrate (R)
P119	7803–55–6	Ammonium vanadate
P099	506–61–6	Argentate(1-), bis(cyano-C)-, potassium
P010	7778–39–4	Arsenic acid H_3AsO_4
P012	1327–53–3	Arsenic oxide As_2O_3
P011	1303–28–2	Arsenic oxide As_2O_5
P011	1303–28–2	Arsenic pentoxide
P012	1327–53–3	Arsenic trioxide
P038	692–42–2	Arsine, diethyl-
P036	696–28–6	Arsonous dichloride, phenyl-
P054	151–56–4	Aziridine
P067	75–55–8	Aziridine, 2-methyl-

P013	542–62–1	Barium cyanide
P024	106–47–8	Benzenamine, 4-chloro-
P077	100–01–6	Benzenamine, 4-nitro-
P028	100–44–7	Benzene, (chloromethyl)-
P042	51–43–4	1,2-Benzenediol, 4-[1-hydroxy-2-(methylamino)ethyl]-, (R)-
P046	122–09–8	Benzeneethanamine, alpha,alpha-dimethyl-
P014	108–98–5	Benzenethiol
P127	1563–66–2	7-Benzofuranol, 2,3-dihydro-2,2-dimethyl-, methylcarbamate.
P188	57–64–7	Benzoic acid, 2-hydroxy-, compd. with (3aS-cis)-1,2,3,3a,8,8a-hexahydro-1,3a,8-trimethylpyrrolo[2,3-b]indol-5-yl methylcarbamate ester (1:1).
P001	[1]81–81–2	2H-1-Benzopyran-2-one, 4-hydroxy-3-(3-oxo-1-phenylbutyl)-, & salts, when present at concentrations greater than 0.3%
P028	100–44–7	Benzyl chloride
P015	7440–41–7	Beryllium powder
P017	598–31–2	Bromoacetone
P018	357–57–3	Brucine
P045	39196–18–4	2-Butanone, 3,3-dimethyl-1-(methylthio)-, O-[(methylamino)carbonyl] oxime
P021	592–01–8	Calcium cyanide
P021	592–01–8	Calcium cyanide $Ca(CN)_2$
P189	55285–14–8	Carbamic acid, [(dibutylamino)- thio]methyl-, 2,3-dihydro-2,2-dimethyl- 7-benzofuranyl ester.
P191	644–64–4	Carbamic acid, dimethyl-, 1-[(dimethyl-amino) carbonyl]- 5-methyl-1H- pyrazol-3-yl ester.
P192	119–38–0	Carbamic acid, dimethyl-, 3-methyl-1- (1-methylethyl)-1H- pyrazol-5-yl ester.
P190	1129–41–5	Carbamic acid, methyl-, 3-methylphenyl ester.
P127	1563–66–2	Carbofuran.
P022	75–15–0	Carbon disulfide
P095	75–44–5	Carbonic dichloride
P189	55285–14–8	Carbosulfan.
P023	107–20–0	Chloroacetaldehyde
P024	106–47–8	p-Chloroaniline
P026	5344–82–1	1-(o-Chlorophenyl)thiourea

EPAPA011000066

P027	542–76–7	3-Chloropropionitrile
P029	544–92–3	Copper cyanide
P029	544–92–3	Copper cyanide Cu(CN)
P202	64–00–6	m-Cumenyl methylcarbamate.
P030		Cyanides (soluble cyanide salts), not otherwise specified
P031	460–19–5	Cyanogen
P033	506–77–4	Cyanogen chloride
P033	506–77–4	Cyanogen chloride (CN)Cl
P034	131–89–5	2-Cyclohexyl-4,6-dinitrophenol
P016	542–88–1	Dichloromethyl ether
P036	696–28–6	Dichlorophenylarsine
P037	60–57–1	Dieldrin
P038	692–42–2	Diethylarsine
P041	311–45–5	Diethyl-p-nitrophenyl phosphate
P040	297–97–2	O,O-Diethyl O-pyrazinyl phosphorothioate
P043	55–91–4	Diisopropylfluorophosphate (DFP)
P004	309–00–2	1,4,5,8-Dimethanonaphthalene, 1,2,3,4,10,10-hexa-chloro-1,4,4a,5,8,8a,-hexahydro-, (1alpha,4alpha,4abeta,5alpha,8alpha,8abeta)-
P060	465–73–6	1,4,5,8-Dimethanonaphthalene, 1,2,3,4,10,10-hexa-chloro-1,4,4a,5,8,8a-hexahydro-, (1alpha,4alpha,4abeta,5beta,8beta,8abeta)-
P037	60–57–1	2,7:3,6-Dimethanonaphth[2,3-b]oxirene, 3,4,5,6,9,9-hexachloro-1a,2,2a,3,6,6a,7,7a-octahydro-, (1aalpha,2beta,2aalpha,3beta,6beta,6aalpha,7beta, 7aalpha)-
P051	[1]72–20–8	2,7:3,6-Dimethanonaphth [2,3-b]oxirene, 3,4,5,6,9,9-hexachloro-1a,2,2a,3,6,6a,7,7a-octahydro-, (1aalpha,2beta,2abeta,3alpha,6alpha,6abeta,7beta, 7aalpha)-, & metabolites
P044	60–51–5	Dimethoate
P046	122–09–8	alpha,alpha-Dimethylphenethylamine
P191	644–64–4	Dimetilan.
P047	[1]534–52–1	4,6-Dinitro-o-cresol, & salts
P048	51–28–5	2,4-Dinitrophenol
P020	88–85–7	Dinoseb
P085	152–16–9	Diphosphoramide, octamethyl-
P111	107–49–3	Diphosphoric acid, tetraethyl ester
P039	298–04–4	Disulfoton
P049	541–53–7	Dithiobiuret

P185	26419–73–8	1,3-Dithiolane-2-carboxaldehyde, 2,4-dimethyl-, O-[(methylamino)- carbonyl]oxime.
P050	115–29–7	Endosulfan
P088	145–73–3	Endothall
P051	72–20–8	Endrin
P051	72–20–8	Endrin, & metabolites
P042	51–43–4	Epinephrine
P031	460–19–5	Ethanedinitrile
P194	23135–22–0	Ethanimidothioic acid, 2-(dimethylamino)-N-[[(methylamino) carbonyl]oxy]-2-oxo-, methyl ester.
P066	16752–77–5	Ethanimidothioic acid, N-[[(methylamino)carbonyl]oxy]-, methyl ester
P101	107–12–0	Ethyl cyanide
P054	151–56–4	Ethyleneimine
P097	52–85–7	Famphur
P056	7782–41–4	Fluorine
P057	640–19–7	Fluoroacetamide
P058	62–74–8	Fluoroacetic acid, sodium salt
P198	23422–53–9	Formetanate hydrochloride.
P197	17702–57–7	Formparanate.
P065	628–86–4	Fulminic acid, mercury(2+) salt (R,T)
P059	76–44–8	Heptachlor
P062	757–58–4	Hexaethyl tetraphosphate
P116	79–19–6	Hydrazinecarbothioamide
P068	60–34–4	Hydrazine, methyl-
P063	74–90–8	Hydrocyanic acid
P063	74–90–8	Hydrogen cyanide
P096	7803–51–2	Hydrogen phosphide
P060	465–73–6	Isodrin
P192	119–38–0	Isolan.
P202	64–00–6	3-Isopropylphenyl N-methylcarbamate.
P007	2763–96–4	3(2H)-Isoxazolone, 5-(aminomethyl)-
P196	15339–36–3	Manganese, bis(dimethylcarbamodithioato-S,S')-,
P196	15339–36–3	Manganese dimethyldithiocarbamate.
P092	62–38–4	Mercury, (acetato-O)phenyl-

P065	628–86–4	Mercury fulminate (R,T)
P082	62–75–9	Methanamine, N-methyl-N-nitroso-
P064	624–83–9	Methane, isocyanato-
P016	542–88–1	Methane, oxybis[chloro-
P112	509–14–8	Methane, tetranitro- (R)
P118	75–70–7	Methanethiol, trichloro-
P198	23422–53–9	Methanimidamide, N,N-dimethyl-N′-[3-[[(methylamino)-carbonyl]oxy]phenyl]-, monohydrochloride.
P197	17702–57–7	Methanimidamide, N,N-dimethyl-N′-[2-methyl-4-[[(methylamino)carbonyl]oxy]phenyl]-
P050	115–29–7	6,9-Methano-2,4,3-benzodioxathiepin, 6,7,8,9,10,10-hexachloro-1,5,5a,6,9,9a-hexahydro-, 3-oxide
P059	76–44–8	4,7-Methano-1H-indene, 1,4,5,6,7,8,8-heptachloro-3a,4,7,7a-tetrahydro-
P199	2032–65–7	Methiocarb.
P066	16752–77–5	Methomyl
P068	60–34–4	Methyl hydrazine
P064	624–83–9	Methyl isocyanate
P069	75–86–5	2-Methyllactonitrile
P071	298–00–0	Methyl parathion
P190	1129–41–5	Metolcarb.
P128	315–8–4	Mexacarbate.
P072	86–88–4	alpha-Naphthylthiourea
P073	13463–39–3	Nickel carbonyl
P073	13463–39–3	Nickel carbonyl $Ni(CO)_4$, (T-4)-
P074	557–19–7	Nickel cyanide
P074	557–19–7	Nickel cyanide $Ni(CN)_2$
P075	[1]54–11–5	Nicotine, & salts
P076	10102–43–9	Nitric oxide
P077	100–01–6	p-Nitroaniline
P078	10102–44–0	Nitrogen dioxide
P076	10102–43–9	Nitrogen oxide NO
P078	10102–44–0	Nitrogen oxide NO_2

EPAPA011000069

P081	55–63–0	Nitroglycerine (R)
P082	62–75–9	N-Nitrosodimethylamine
P084	4549–40–0	N-Nitrosomethylvinylamine
P085	152–16–9	Octamethylpyrophosphoramide
P087	20816–12–0	Osmium oxide OsO_4, (T-4)-
P087	20816–12–0	Osmium tetroxide
P088	145–73–3	7-Oxabicyclo[2.2.1]heptane-2,3-dicarboxylic acid
P194	23135–22–0	Oxamyl.
P089	56–38–2	Parathion
P034	131–89–5	Phenol, 2-cyclohexyl-4,6-dinitro-
P048	51–28–5	Phenol, 2,4-dinitro-
P047	[1]534–52–1	Phenol, 2-methyl-4,6-dinitro-, & salts
P020	88–85–7	Phenol, 2-(1-methylpropyl)-4,6-dinitro-
P009	131–74–8	Phenol, 2,4,6-trinitro-, ammonium salt (R)
P128	315–18–4	Phenol, 4-(dimethylamino)-3,5-dimethyl-, methylcarbamate (ester).
P199	2032–65–7	Phenol, (3,5-dimethyl-4-(methylthio)-, methylcarbamate
P202	64–00–6	Phenol, 3-(1-methylethyl)-, methyl carbamate.
P201	2631–37–0	Phenol, 3-methyl-5-(1-methylethyl)-, methyl carbamate.
P092	62–38–4	Phenylmercury acetate
P093	103–85–5	Phenylthiourea
P094	298–02–2	Phorate
P095	75–44–5	Phosgene
P096	7803–51–2	Phosphine
P041	311–45–5	Phosphoric acid, diethyl 4-nitrophenyl ester
P039	298–04–4	Phosphorodithioic acid, O,O-diethyl S-[2-(ethylthio)ethyl] ester
P094	298–02–2	Phosphorodithioic acid, O,O-diethyl S-[(ethylthio)methyl] ester
P044	60–51–5	Phosphorodithioic acid, O,O-dimethyl S-[2-(methylamino)-2-oxoethyl] ester
P043	55–91–4	Phosphorofluoridic acid, bis(1-methylethyl) ester
P089	56–38–2	Phosphorothioic acid, O,O-diethyl O-(4-nitrophenyl) ester
P040	297–97–2	Phosphorothioic acid, O,O-diethyl O-pyrazinyl ester

P097	52–85–7	Phosphorothioic acid, O-[4-[(dimethylamino)sulfonyl]phenyl] O,O-dimethyl ester
P071	298–00–0	Phosphorothioic acid, O,O,-dimethyl O-(4-nitrophenyl) ester
P204	57–47–6	Physostigmine.
P188	57–64–7	Physostigmine salicylate.
P110	78–00–2	Plumbane, tetraethyl-
P098	151–50–8	Potassium cyanide
P098	151–50–8	Potassium cyanide K(CN)
P099	506–61–6	Potassium silver cyanide
P201	2631–37–0	Promecarb
P070	116–06–3	Propanal, 2-methyl-2-(methylthio)-, O-[(methylamino)carbonyl]oxime
P203	1646–88–4	Propanal, 2-methyl-2-(methyl-sulfonyl)-, O-[(methylamino)carbonyl] oxime.
P101	107–12–0	Propanenitrile
P027	542–76–7	Propanenitrile, 3-chloro-
P069	75–86–5	Propanenitrile, 2-hydroxy-2-methyl-
P081	55–63–0	1,2,3-Propanetriol, trinitrate (R)
P017	598–31–2	2-Propanone, 1-bromo-
P102	107–19–7	Propargyl alcohol
P003	107–02–8	2-Propenal
P005	107–18–6	2-Propen-1-ol
P067	75–55–8	1,2-Propylenimine
P102	107–19–7	2-Propyn-1-ol
P008	504–24–5	4-Pyridinamine
P075	[1]54–11–5	Pyridine, 3-(1-methyl-2-pyrrolidinyl)-, (S)-, & salts
P204	57–47–6	Pyrrolo[2,3-b]indol-5-ol, 1,2,3,3a,8,8a-hexahydro-1,3a,8-trimethyl-, methylcarbamate (ester), (3aS-cis)-.
P114	12039–52–0	Selenious acid, dithallium(1+) salt
P103	630–10–4	Selenourea
P104	506–64–9	Silver cyanide
P104	506–64–9	Silver cyanide Ag(CN)
P105	26628–22–8	Sodium azide
P106	143–33–9	Sodium cyanide
P106	143–33–9	Sodium cyanide Na(CN)
P108	[1]57–24–9	Strychnidin-10-one, & salts

P018	357–57–3	Strychnidin-10-one, 2,3-dimethoxy-
P108	[1]57–24–9	Strychnine, & salts
P115	7446–18–6	Sulfuric acid, dithallium(1+) salt
P109	3689–24–5	Tetraethyldithiopyrophosphate
P110	78–00–2	Tetraethyl lead
P111	107–49–3	Tetraethyl pyrophosphate
P112	509–14–8	Tetranitromethane (R)
P062	757–58–4	Tetraphosphoric acid, hexaethyl ester
P113	1314–32–5	Thallic oxide
P113	1314–32–5	Thallium oxide Tl_2O_3
P114	12039–52–0	Thallium(I) selenite
P115	7446–18–6	Thallium(I) sulfate
P109	3689–24–5	Thiodiphosphoric acid, tetraethyl ester
P045	39196–18–4	Thiofanox
P049	541–53–7	Thioimidodicarbonic diamide $[(H_2N)C(S)]_2NH$
P014	108–98–5	Thiophenol
P116	79–19–6	Thiosemicarbazide
P026	5344–82–1	Thiourea, (2-chlorophenyl)-
P072	86–88–4	Thiourea, 1-naphthalenyl-
P093	103–85–5	Thiourea, phenyl-
P185	26419–73–8	Tirpate.
P123	8001–35–2	Toxaphene
P118	75–70–7	Trichloromethanethiol
P119	7803–55–6	Vanadic acid, ammonium salt
P120	1314–62–1	Vanadium oxide V_2O_5
P120	1314–62–1	Vanadium pentoxide
P084	4549–40–0	Vinylamine, N-methyl-N-nitroso-
P001	[1]81–81–2	Warfarin, & salts, when present at concentrations

EPAPA011000072

		greater than 0.3%
P205	137–30–4	Zinc, bis(dimethylcarbamodithioato-S,S')-,
P121	557–21–1	Zinc cyanide
P121	557–21–1	Zinc cyanide $Zn(CN)_2$
P122	1314–84–7	Zinc phosphide Zn_3P_2, when present at concentrations greater than 10% (R,T)
P205	137–30–4	Ziram.
P001	[1]81–81–2	2H-1-Benzopyran-2-one, 4-hydroxy-3-(3-oxo-1-phenylbutyl)-, & salts, when present at concentrations greater than 0.3%
P001	[1]81–81–2	Warfarin, & salts, when present at concentrations greater than 0.3%
P002	591–08–2	Acetamide, -(aminothioxomethyl)-
P002	591–08–2	1-Acetyl-2-thiourea
P003	107–02–8	Acrolein
P003	107–02–8	2-Propenal
P004	309–00–2	Aldrin
P004	309–00–2	1,4,5,8-Dimethanonaphthalene, 1,2,3,4,10,10-hexa-chloro-1,4,4a,5,8,8a,-hexahydro-, (1alpha,4alpha,4abeta,5alpha,8alpha,8abeta)-
P005	107–18–6	Allyl alcohol
P005	107–18–6	2-Propen-1-ol
P006	20859–73–8	Aluminum phosphide (R,T)
P007	2763–96–4	5-(Aminomethyl)-3-isoxazolol
P007	2763–96–4	3(2H)-Isoxazolone, 5-(aminomethyl)-
P008	504–24–5	4-Aminopyridine
P008	504–24–5	4-Pyridinamine
P009	131–74–8	Ammonium picrate (R)
P009	131–74–8	Phenol, 2,4,6-trinitro-, ammonium salt (R)
P010	7778–39–4	Arsenic acid H_3AsO_4
P011	1303–28–2	Arsenic oxide As_2O_5
P011	1303–28–2	Arsenic pentoxide
P012	1327–53–3	Arsenic oxide As_2O_3
P012	1327–53–3	Arsenic trioxide

EPAPA011000073

P013	542–62–1	Barium cyanide
P014	108–98–5	Benzenethiol
P014	108–98–5	Thiophenol
P015	7440–41–7	Beryllium powder
P016	542–88–1	Dichloromethyl ether
P016	542–88–1	Methane, oxybis[chloro-
P017	598–31–2	Bromoacetone
P017	598–31–2	2-Propanone, 1-bromo-
P018	357–57–3	Brucine
P018	357–57–3	Strychnidin-10-one, 2,3-dimethoxy-
P020	88–85–7	Dinoseb
P020	88–85–7	Phenol, 2-(1-methylpropyl)-4,6-dinitro-
P021	592–01–8	Calcium cyanide
P021	592–01–8	Calcium cyanide $Ca(CN)_2$
P022	75–15–0	Carbon disulfide
P023	107–20–0	Acetaldehyde, chloro-
P023	107–20–0	Chloroacetaldehyde
P024	106–47–8	Benzenamine, 4-chloro-
P024	106–47–8	p-Chloroaniline
P026	5344–82–1	1-(o-Chlorophenyl)thiourea
P026	5344–82–1	Thiourea, (2-chlorophenyl)-
P027	542–76–7	3-Chloropropionitrile
P027	542–76–7	Propanenitrile, 3-chloro-
P028	100–44–7	Benzene, (chloromethyl)-
P028	100–44–7	Benzyl chloride
P029	544–92–3	Copper cyanide
P029	544–92–3	Copper cyanide Cu(CN)
P030		Cyanides (soluble cyanide salts), not otherwise specified
P031	460–19–5	Cyanogen
P031	460–19–5	Ethanedinitrile
P033	506–77–4	Cyanogen chloride
P033	506–77–4	Cyanogen chloride (CN)Cl
P034	131–89–5	2-Cyclohexyl-4,6-dinitrophenol
P034	131–89–5	Phenol, 2-cyclohexyl-4,6-dinitro-
P036	696–28–6	Arsonous dichloride, phenyl-
P036	696–28–6	Dichlorophenylarsine
P037	60–57–1	Dieldrin

EPAPA011000074

P037	60–57–1	2,7:3,6-Dimethanonaphth[2,3-b]oxirene, 3,4,5,6,9,9-hexachloro-1a,2,2a,3,6,6a,7,7a-octahydro-, (1aalpha,2beta,2aalpha,3beta,6beta,6aalpha,7beta, 7aalpha)-
P038	692–42–2	Arsine, diethyl-
P038	692–42–2	Diethylarsine
P039	298–04–4	Disulfoton
P039	298–04–4	Phosphorodithioic acid, O,O-diethyl S-[2-(ethylthio) ethyl] ester
P040	297–97–2	O,O-Diethyl O-pyrazinyl phosphorothioate
P040	297–97–2	Phosphorothioic acid, O,O-diethyl O-pyrazinyl ester
P041	311–45–5	Diethyl-p-nitrophenyl phosphate
P041	311–45–5	Phosphoric acid, diethyl 4-nitrophenyl ester
P042	51–43–4	1,2-Benzenediol, 4-[1-hydroxy-2-(methylamino)ethyl]-, (R)-
P042	51–43–4	Epinephrine
P043	55–91–4	Diisopropylfluorophosphate (DFP)
P043	55–91–4	Phosphorofluoridic acid, bis(1-methylethyl) ester
P044	60–51–5	Dimethoate
P044	60–51–5	Phosphorodithioic acid, O,O-dimethyl S-[2-(methyl amino)-2-oxoethyl] ester
P045	39196–18–4	2-Butanone, 3,3-dimethyl-1-(methylthio)-, O-[(methylamino)carbonyl] oxime
P045	39196–18–4	Thiofanox
P046	122–09–8	Benzeneethanamine, alpha,alpha-dimethyl-
P046	122–09–8	alpha,alpha-Dimethylphenethylamine
P047	[1]534–52–1	4,6-Dinitro-o-cresol, & salts
P047	[1]534–52–1	Phenol, 2-methyl-4,6-dinitro-, & salts
P048	51–28–5	2,4-Dinitrophenol
P048	51–28–5	Phenol, 2,4-dinitro-
P049	541–53–7	Dithiobiuret
P049	541–53–7	Thioimidodicarbonic diamide $[(H_2N)C(S)]_2NH$
P050	115–29–7	Endosulfan
P050	115–29–7	6,9-Methano-2,4,3-benzodioxathiepin, 6,7,8,9,10,10-hexachloro-1,5,5a,6,9,9a-hexahydro-, 3-oxide
P051	[1]72–20–8	2,7:3,6-Dimethanonaphth [2,3-b]oxirene, 3,4,5,6,9,9-hexachloro-1a,2,2a,3,6,6a,7,7a-octahydro-, (1aalpha,2beta,2abeta,3alpha,6alpha,6abeta,7beta, 7aalpha)-, & metabolites

P051	72–20–8	Endrin
P051	72–20–8	Endrin, & metabolites
P054	151–56–4	Aziridine
P054	151–56–4	Ethyleneimine
P056	7782–41–4	Fluorine
P057	640–19–7	Acetamide, 2-fluoro-
P057	640–19–7	Fluoroacetamide
P058	62–74–8	Acetic acid, fluoro-, sodium salt
P058	62–74–8	Fluoroacetic acid, sodium salt
P059	76–44–8	Heptachlor
P059	76–44–8	4,7-Methano-1H-indene, 1,4,5,6,7,8,8-heptachloro-3a,4,7,7a-tetrahydro-
P060	465–73–6	1,4,5,8-Dimethanonaphthalene, 1,2,3,4,10,10-hexa-chloro-1,4,4a,5,8,8a-hexahydro-, (1alpha,4alpha,4abeta,5beta,8beta,8abeta)-
P060	465–73–6	Isodrin
P062	757–58–4	Hexaethyl tetraphosphate
P062	757–58–4	Tetraphosphoric acid, hexaethyl ester
P063	74–90–8	Hydrocyanic acid
P063	74–90–8	Hydrogen cyanide
P064	624–83–9	Methane, isocyanato-
P064	624–83–9	Methyl isocyanate
P065	628–86–4	Fulminic acid, mercury(2+) salt (R,T)
P065	628–86–4	Mercury fulminate (R,T)
P066	16752–77–5	Ethanimidothioic acid, N-[[(methylamino)carbonyl] oxy]-, methyl ester
P066	16752–77–5	Methomyl
P067	75–55–8	Aziridine, 2-methyl-
P067	75–55–8	1,2-Propylenimine
P068	60–34–4	Hydrazine, methyl-
P068	60–34–4	Methyl hydrazine
P069	75–86–5	2-Methyllactonitrile
P069	75–86–5	Propanenitrile, 2-hydroxy-2-methyl-
P070	116–06–3	Aldicarb
P070	116–06–3	Propanal, 2-methyl-2-(methylthio)-, O-[(methylamino) carbonyl]oxime
P071	298–00–0	Methyl parathion
P071	298–00–0	Phosphorothioic acid, O,O,-dimethyl O-(4-nitrophenyl) ester
P072	86–88–4	alpha-Naphthylthiourea

P072	86–88–4	Thiourea, 1-naphthalenyl-
P073	13463–39–3	Nickel carbonyl
P073	13463–39–3	Nickel carbonyl $Ni(CO)_4$, (T-4)-
P074	557–19–7	Nickel cyanide
P074	557–19–7	Nickel cyanide $Ni(CN)_2$
P075	[1]54–11–5	Nicotine, & salts
P075	[1]54–11–5	Pyridine, 3-(1-methyl-2-pyrrolidinyl)-, (S)-, & salts
P076	10102–43–9	Nitric oxide
P076	10102–43–9	Nitrogen oxide NO
P077	100–01–6	Benzenamine, 4-nitro-
P077	100–01–6	p-Nitroaniline
P078	10102–44–0	Nitrogen dioxide
P078	10102–44–0	Nitrogen oxide NO_2
P081	55–63–0	Nitroglycerine (R)
P081	55–63–0	1,2,3-Propanetriol, trinitrate (R)
P082	62–75–9	Methanamine, -methyl-N-nitroso-
P082	62–75–9	N-Nitrosodimethylamine
P084	4549–40–0	N-Nitrosomethylvinylamine
P084	4549–40–0	Vinylamine, -methyl-N-nitroso-
P085	152–16–9	Diphosphoramide, octamethyl-
P085	152–16–9	Octamethylpyrophosphoramide
P087	20816–12–0	Osmium oxide OsO_4, (T-4)-
P087	20816–12–0	Osmium tetroxide
P088	145–73–3	Endothall
P088	145–73–3	7-Oxabicyclo[2.2.1]heptane-2,3-dicarboxylic acid
P089	56–38–2	Parathion
P089	56–38–2	Phosphorothioic acid, O,O-diethyl O-(4-nitrophenyl) ester
P092	62–38–4	Mercury, (acetato-O)phenyl-
P092	62–38–4	Phenylmercury acetate
P093	103–85–5	Phenylthiourea
P093	103–85–5	Thiourea, phenyl-

EPAPA011000077

P094	298–02–2	Phorate
P094	298–02–2	Phosphorodithioic acid, O,O-diethyl S-[(ethylthio) methyl] ester
P095	75–44–5	Carbonic dichloride
P095	75–44–5	Phosgene
P096	7803–51–2	Hydrogen phosphide
P096	7803–51–2	Phosphine
P097	52–85–7	Famphur
P097	52–85–7	Phosphorothioic acid, O-[4-[(dimethylamino)sulfonyl] phenyl] O,O-dimethyl ester
P098	151–50–8	Potassium cyanide
P098	151–50–8	Potassium cyanide K(CN)
P099	506–61–6	Argentate(1-), bis(cyano-C)-, potassium
P099	506–61–6	Potassium silver cyanide
P101	107–12–0	Ethyl cyanide
P101	107–12–0	Propanenitrile
P102	107–19–7	Propargyl alcohol
P102	107–19–7	2-Propyn-1-ol
P103	630–10–4	Selenourea
P104	506–64–9	Silver cyanide
P104	506–64–9	Silver cyanide Ag(CN)
P105	26628–22–8	Sodium azide
P106	143–33–9	Sodium cyanide
P106	143–33–9	Sodium cyanide Na(CN)
P108	[1]157–24–9	Strychnidin-10-one, & salts
P108	[1]157–24–9	Strychnine, & salts
P109	3689–24–5	Tetraethyldithiopyrophosphate
P109	3689–24–5	Thiodiphosphoric acid, tetraethyl ester
P110	78–00–2	Plumbane, tetraethyl-
P110	78–00–2	Tetraethyl lead
P111	107–49–3	Diphosphoric acid, tetraethyl ester
P111	107–49–3	Tetraethyl pyrophosphate
P112	509–14–8	Methane, tetranitro-(R)
P112	509–14–8	Tetranitromethane (R)
P113	1314–32–	Thallic oxide

	5	
P113	1314–32–5	Thallium oxide Tl_2O_3
P114	12039–52–0	Selenious acid, dithallium(1+) salt
P114	12039–52–0	Tetraethyldithiopyrophosphate
P115	7446–18–6	Thiodiphosphoric acid, tetraethyl ester
P115	7446–18–6	Plumbane, tetraethyl-
P116	79–19–6	Tetraethyl lead
P116	79–19–6	Thiosemicarbazide
P118	75–70–7	Methanethiol, trichloro-
P118	75–70–7	Trichloromethanethiol
P119	7803–55–6	Ammonium vanadate
P119	7803–55–6	Vanadic acid, ammonium salt
P120	1314–62–1	Vanadium oxide V_2O_5
P120	1314–62–1	Vanadium pentoxide
P121	557–21–1	Zinc cyanide
P121	557–21–1	Zinc cyanide $Zn(CN)_2$
P122	1314–84–7	Zinc phosphide Zn_3P_2, when present at concentrations greater than 10% (R,T)
P123	8001–35–2	Toxaphene
P127	1563–66–2	7-Benzofuranol, 2,3-dihydro-2,2-dimethyl-, methylcarbamate.
P127	1563–66–2	Carbofuran
P128	315–8–4	Mexacarbate
P128	315–18–4	Phenol, 4-(dimethylamino)-3,5-dimethyl-, methylcarbamate (ester)
P185	26419–73–8	1,3-Dithiolane-2-carboxaldehyde, 2,4-dimethyl-, O-[(methylamino)-carbonyl]oxime.
P185	26419–73–8	Tirpate
P188	57–64–7	Benzoic acid, 2-hydroxy-, compd. with (3aS-cis)-1,2,3,3a,8,8a-hexahydro-1,3a,8-trimethylpyrrolo[2,3-b]indol-5-yl methylcarbamate ester (1:1)

EPAPA011000079

P188	57–64–7	Physostigmine salicylate
P189	55285–14–8	Carbamic acid, [(dibutylamino)-thio]methyl-, 2,3-dihydro-2,2-dimethyl-7-benzofuranyl ester
P189	55285–14–8	Carbosulfan
P190	1129–41–5	Carbamic acid, methyl-, 3-methylphenyl ester
P190	1129–41–5	Metolcarb
P191	644–64–4	Carbamic acid, dimethyl-, 1-[(dimethyl-amino) carbonyl]-5-methyl-1H-pyrazol-3-yl ester
P191	644–64–4	Dimetilan
P192	119–38–0	Carbamic acid, dimethyl-, 3-methyl-1-(1-methylethyl)-1H-pyrazol-5-yl ester
P192	119–38–0	Isolan
P194	23135–22–0	Ethanimidthioic acid, 2-(dimethylamino)-N-[[(methylamino) carbonyl]oxy]-2-oxo-, methyl ester
P194	23135–22–0	Oxamyl
P196	15339–36–3	Manganese, bis(dimethylcarbamodithioato-S,S')-,
P196	15339–36–3	Manganese dimethyldithiocarbamate
P197	17702–57–7	Formparanate
P197	17702–57–7	Methanimidamide, N,N-dimethyl-N'-[2-methyl-4-[[(methylamino)carbonyl]oxy]phenyl]-
P198	23422–53–9	Formetanate hydrochloride
P198	23422–53–9	Methanimidamide, N,N-dimethyl-N'-[3-[[(methylamino)-carbonyl]oxy]phenyl]-monohydrochloride
P199	2032–65–7	Methiocarb
P199	2032–65–7	Phenol, (3,5-dimethyl-4-(methylthio)-, methylcarbamate
P201	2631–37–0	Phenol, 3-methyl-5-(1-methylethyl)-, methyl carbamate
P201	2631–37–0	Promecarb
P202	64–00–6	m-Cumenyl methylcarbamate
P202	64–00–6	3-Isopropylphenyl N-methylcarbamate
P202	64–00–6	Phenol, 3-(1-methylethyl)-, methyl carbamate
P203	1646–88–	Aldicarb sulfone

	4	
P203	1646–88–4	Propanal, 2-methyl-2-(methyl-sulfonyl)-, O-[(methylamino)carbonyl] oxime
P204	57–47–6	Physostigmine
P204	57–47–6	Pyrrolo[2,3-b]indol-5-ol, 1,2,3,3a,8,8a-hexahydro-1,3a,8-trimethyl-, methylcarbamate (ester), (3aS-cis)-
P205	137–30–4	Zinc, bis(dimethylcarbamodithioato-S,S')-,
P205	137–30–4	Ziram

[1]CAS Number given for parent compound only.

(f) The commercial chemical products, manufacturing chemical intermediates, or off-specification commercial chemical products referred to in paragraphs (a) through (d) of this section, are identified as toxic wastes (T), unless otherwise designated and are subject to the small quantity generator exclusion defined in §261.5 (a) and (g).

[*Comment:* For the convenience of the regulated community, the primary hazardous properties of these materials have been indicated by the letters T (Toxicity), R (Reactivity), I (Ignitability) and C (Corrosivity). Absence of a letter indicates that the compound is only listed for toxicity. Wastes are first listed in alphabetical order by substance and then listed again in numerical order by Hazardous Waste Number.]

These wastes and their corresponding EPA Hazardous Waste Numbers are:

Hazardous waste No.	Chemical abstracts No.	Substance
U394	30558–43–1	A2213.
U001	75–07–0	Acetaldehyde (I)
U034	75–87–6	Acetaldehyde, trichloro-
U187	62–44–2	Acetamide, N-(4-ethoxyphenyl)-
U005	53–96–3	Acetamide, N-9H-fluoren-2-yl-
U240	[1]94–75–7	Acetic acid, (2,4-dichlorophenoxy)-, salts & esters
U112	141–78–6	Acetic acid ethyl ester (I)
U144	301–04–2	Acetic acid, lead(2+) salt
U214	563–68–8	Acetic acid, thallium(1+) salt
see F027	93–76–5	Acetic acid, (2,4,5-trichlorophenoxy)-
U002	67–64–1	Acetone (I)
U003	75–05–8	Acetonitrile (I,T)
U004	98–86–2	Acetophenone
U005	53–96–3	2-Acetylaminofluorene

U006	75–36–5	Acetyl chloride (C,R,T)
U007	79–06–1	Acrylamide
U008	79–10–7	Acrylic acid (I)
U009	107–13–1	Acrylonitrile
U011	61–82–5	Amitrole
U012	62–53–3	Aniline (I,T)
U136	75–60–5	Arsinic acid, dimethyl-
U014	492–80–8	Auramine
U015	115–02–6	Azaserine
U010	50–07–7	Azirino[2′,3′:3,4]pyrrolo[1,2-a]indole-4,7-dione, 6-amino-8-[[(aminocarbonyl)oxy]methyl]-1,1a,2,8,8a,8b-hexahydro-8a-methoxy-5-methyl-, [1aS-(1aalpha,8beta,8aalpha,8balpha)]-
U280	101–27–9	Barban.
U278	22781–23–3	Bendiocarb.
U364	22961–82–6	Bendiocarb phenol.
U271	17804–35–2	Benomyl.
U157	56–49–5	Benz[j]aceanthrylene, 1,2-dihydro-3-methyl-
U016	225–51–4	Benz[c]acridine
U017	98–87–3	Benzal chloride
U192	23950–58–5	Benzamide, 3,5-dichloro-N-(1,1-dimethyl-2-propynyl)-
U018	56–55–3	Benz[a]anthracene
U094	57–97–6	Benz[a]anthracene, 7,12-dimethyl-
U012	62–53–3	Benzenamine (I,T)
U014	492–80–8	Benzenamine, 4,4′-carbonimidoylbis[N,N-dimethyl-
U049	3165–93–3	Benzenamine, 4-chloro-2-methyl-, hydrochloride
U093	60–11–7	Benzenamine, N,N-dimethyl-4-(phenylazo)-
U328	95–53–4	Benzenamine, 2-methyl-
U353	106–49–0	Benzenamine, 4-methyl-
U158	101–14–4	Benzenamine, 4,4′-methylenebis[2-chloro-

U222	636–21–5	Benzenamine, 2-methyl-, hydrochloride
U181	99–55–8	Benzenamine, 2-methyl-5-nitro-
U019	71–43–2	Benzene (I,T)
U038	510–15–6	Benzeneacetic acid, 4-chloro-alpha-(4-chlorophenyl)-alpha-hydroxy-, ethyl ester
U030	101–55–3	Benzene, 1-bromo-4-phenoxy-
U035	305–03–3	Benzenebutanoic acid, 4-[bis(2-chloroethyl) amino]-
U037	108–90–7	Benzene, chloro-
U221	25376–45–8	Benzenediamine, ar-methyl-
U028	117–81–7	1,2-Benzenedicarboxylic acid, bis(2-ethylhexyl) ester
U069	84–74–2	1,2-Benzenedicarboxylic acid, dibutyl ester
U088	84–66–2	1,2-Benzenedicarboxylic acid, diethyl ester
U102	131–11–3	1,2-Benzenedicarboxylic acid, dimethyl ester
U107	117–84–0	1,2-Benzenedicarboxylic acid, dioctyl ester
U070	95–50–1	Benzene, 1,2-dichloro-
U071	541–73–1	Benzene, 1,3-dichloro-
U072	106–46–7	Benzene, 1,4-dichloro-
U060	72–54–8	Benzene, 1,1'-(2,2-dichloroethylidene)bis[4-chloro-
U017	98–87–3	Benzene, (dichloromethyl)-
U223	26471–62–5	Benzene, 1,3-diisocyanatomethyl- (R,T)
U239	1330–20–7	Benzene, dimethyl- (I,T)
U201	108–46–3	1,3-Benzenediol
U127	118–74–1	Benzene, hexachloro-
U056	110–82–7	Benzene, hexahydro- (I)
U220	108–88–3	Benzene, methyl-
U105	121–14–2	Benzene, 1-methyl-2,4-dinitro-

U106	606–20–2	Benzene, 2-methyl-1,3-dinitro-
U055	98–82–8	Benzene, (1-methylethyl)- (I)
U169	98–95–3	Benzene, nitro-
U183	608–93–5	Benzene, pentachloro-
U185	82–68–8	Benzene, pentachloronitro-
U020	98–09–9	Benzenesulfonic acid chloride (C,R)
U020	98–09–9	Benzenesulfonyl chloride (C,R)
U207	95–94–3	Benzene, 1,2,4,5-tetrachloro-
U061	50–29–3	Benzene, 1,1′-(2,2,2-trichloroethylidene)bis [4-chloro-
U247	72–43–5	Benzene, 1,1′-(2,2,2-trichloroethylidene)bis [4- methoxy-
U023	98–07–7	Benzene, (trichloromethyl)-
U234	99–35–4	Benzene, 1,3,5-trinitro-
U021	92–87–5	Benzidine
U202	[1]81–07–2	1,2-Benzisothiazol-3(2H)-one, 1,1-dioxide, & salts
U278	22781–23–3	1,3-Benzodioxol-4-ol, 2,2-dimethyl-, methyl carbamate.
U364	22961–82–6	1,3-Benzodioxol-4-ol, 2,2-dimethyl-,
U203	94–59–7	1,3-Benzodioxole, 5-(2-propenyl)-
U141	120–58–1	1,3-Benzodioxole, 5-(1-propenyl)-
U367	1563–38–8	7-Benzofuranol, 2,3-dihydro-2,2-dimethyl-
U090	94–58–6	1,3-Benzodioxole, 5-propyl-
U064	189–55–9	Benzo[rst]pentaphene
U248	[1]81–81–2	2H-1-Benzopyran-2-one, 4-hydroxy-3-(3-oxo-1-phenyl-butyl)-, & salts, when present at concentrations of 0.3% or less
U022	50–32–8	Benzo[a]pyrene
U197	106–51–4	p-Benzoquinone
U023	98–07–7	Benzotrichloride (C,R,T)
U085	1464–53–5	2,2′-Bioxirane
U021	92–87–5	[1,1′-Biphenyl]-4,4′-diamine
U073	91–94–1	[1,1′-Biphenyl]-4,4′-diamine, 3,3′-dichloro-
U091	119–90–	[1,1′-Biphenyl]-4,4′-diamine, 3,3′-dimethoxy-

	4	
U095	119–93–7	[1,1′-Biphenyl]-4,4′-diamine, 3,3′-dimethyl-
U225	75–25–2	Bromoform
U030	101–55–3	4-Bromophenyl phenyl ether
U128	87–68–3	1,3-Butadiene, 1,1,2,3,4,4-hexachloro-
U172	924–16–3	1-Butanamine, N-butyl-N-nitroso-
U031	71–36–3	1-Butanol (I)
U159	78–93–3	2-Butanone (I,T)
U160	1338–23–4	2-Butanone, peroxide (R,T)
U053	4170–30–3	2-Butenal
U074	764–41–0	2-Butene, 1,4-dichloro- (I,T)
U143	303–34–4	2-Butenoic acid, 2-methyl-, 7-[[2,3-dihydroxy-2-(1-methoxyethyl)-3-methyl-1-oxobutoxy] methyl]-2,3,5,7a-tetrahydro-1H-pyrrolizin-1-yl ester, [1S-[1alpha(Z),7(2S*,3R*),7aalpha]]-
U031	71–36–3	n-Butyl alcohol (I)
U136	75–60–5	Cacodylic acid
U032	13765–19–0	Calcium chromate
U372	10605–21–7	Carbamic acid, 1H-benzimidazol-2-yl, methyl ester.
U271	17804–35–2	Carbamic acid, [1-[(butylamino)carbonyl]-1H-benzimidazol-2-yl]-, methyl ester.
U280	101–27–9	Carbamic acid, (3-chlorophenyl)-, 4-chloro-2-butynyl ester.
U238	51–79–6	Carbamic acid, ethyl ester
U178	615–53–2	Carbamic acid, methylnitroso-, ethyl ester
U373	122–42–9	Carbamic acid, phenyl-, 1-methylethyl ester.
U409	23564–05–8	Carbamic acid, [1,2-phenylenebis (iminocarbonothioyl)]bis-, dimethyl ester.
U097	79–44–7	Carbamic chloride, dimethyl-
U389	2303–17–5	Carbamothioic acid, bis(1-methylethyl)-, S-(2,3,3-trichloro-2-propenyl) ester.
U387	52888–80–9	Carbamothioic acid, dipropyl-, S-(phenylmethyl) ester.

U114	[1]111–54–6	Carbamodithioic acid, 1,2-ethanediylbis-, salts & esters
U062	2303–16–4	Carbamothioic acid, bis(1-methylethyl)-, S-(2,3-dichloro-2-propenyl) ester
U279	63–25–2	Carbaryl.
U372	10605–21–7	Carbendazim.
U367	1563–38–8	Carbofuran phenol.
U215	6533–73–9	Carbonic acid, dithallium(1+) salt
U033	353–50–4	Carbonic difluoride
U156	79–22–1	Carbonochloridic acid, methyl ester (I,T)
U033	353–50–4	Carbon oxyfluoride (R,T)
U211	56–23–5	Carbon tetrachloride
U034	75–87–6	Chloral
U035	305–03–3	Chlorambucil
U036	57–74–9	Chlordane, alpha & gamma isomers
U026	494–03–1	Chlornaphazin
U037	108–90–7	Chlorobenzene
U038	510–15–6	Chlorobenzilate
U039	59–50–7	p-Chloro-m-cresol
U042	110–75–8	2-Chloroethyl vinyl ether
U044	67–66–3	Chloroform
U046	107–30–2	Chloromethyl methyl ether
U047	91–58–7	beta-Chloronaphthalene
U048	95–57–8	o-Chlorophenol
U049	3165–93–3	4-Chloro-o-toluidine, hydrochloride
U032	13765–19–0	Chromic acid H_2CrO_4, calcium salt
U050	218–01–9	Chrysene
U051		Creosote
U052	1319–	Cresol (Cresylic acid)

	77–3	
U053	4170–30–3	Crotonaldehyde
U055	98–82–8	Cumene (I)
U246	506–68–3	Cyanogen bromide (CN)Br
U197	106–51–4	2,5-Cyclohexadiene-1,4-dione
U056	110–82–7	Cyclohexane (I)
U129	58–89–9	Cyclohexane, 1,2,3,4,5,6-hexachloro-, (1alpha,2alpha,3beta,4alpha,5alpha,6beta)-
U057	108–94–1	Cyclohexanone (I)
U130	77–47–4	1,3-Cyclopentadiene, 1,2,3,4,5,5-hexachloro-
U058	50–18–0	Cyclophosphamide
U240	[1]94–75–7	2,4-D, salts & esters
U059	20830–81–3	Daunomycin
U060	72–54–8	DDD
U061	50–29–3	DDT
U062	2303–16–4	Diallate
U063	53–70–3	Dibenz[a,h]anthracene
U064	189–55–9	Dibenzo[a,i]pyrene
U066	96–12–8	1,2-Dibromo-3-chloropropane
U069	84–74–2	Dibutyl phthalate
U070	95–50–1	o-Dichlorobenzene
U071	541–73–1	m-Dichlorobenzene
U072	106–46–7	p-Dichlorobenzene
U073	91–94–1	3,3'-Dichlorobenzidine
U074	764–41–0	1,4-Dichloro-2-butene (I,T)
U075	75–71–8	Dichlorodifluoromethane
U078	75–35–4	1,1-Dichloroethylene
U079	156–60–5	1,2-Dichloroethylene
U025	111–44–4	Dichloroethyl ether

U027	108–60–1	Dichloroisopropyl ether
U024	111–91–1	Dichloromethoxy ethane
U081	120–83–2	2,4-Dichlorophenol
U082	87–65–0	2,6-Dichlorophenol
U084	542–75–6	1,3-Dichloropropene
U085	1464–53–5	1,2:3,4-Diepoxybutane (I,T)
U108	123–91–1	1,4-Diethyleneoxide
U028	117–81–7	Diethylhexyl phthalate
U395	5952–26–1	Diethylene glycol, dicarbamate.
U086	1615–80–1	N,N′-Diethylhydrazine
U087	3288–58–2	O,O-Diethyl S-methyl dithiophosphate
U088	84–66–2	Diethyl phthalate
U089	56–53–1	Diethylstilbesterol
U090	94–58–6	Dihydrosafrole
U091	119–90–4	3,3′-Dimethoxybenzidine
U092	124–40–3	Dimethylamine (I)
U093	60–11–7	p-Dimethylaminoazobenzene
U094	57–97–6	7,12-Dimethylbenz[a]anthracene
U095	119–93–7	3,3′-Dimethylbenzidine
U096	80–15–9	alpha,alpha-Dimethylbenzylhydroperoxide (R)
U097	79–44–7	Dimethylcarbamoyl chloride
U098	57–14–7	1,1-Dimethylhydrazine
U099	540–73–8	1,2-Dimethylhydrazine
U101	105–67–9	2,4-Dimethylphenol
U102	131–11–3	Dimethyl phthalate
U103	77–78–1	Dimethyl sulfate
U105	121–14–	2,4-Dinitrotoluene

	2	
U106	606–20–2	2,6-Dinitrotoluene
U107	117–84–0	Di-n-octyl phthalate
U108	123–91–1	1,4-Dioxane
U109	122–66–7	1,2-Diphenylhydrazine
U110	142–84–7	Dipropylamine (I)
U111	621–64–7	Di-n-propylnitrosamine
U041	106–89–8	Epichlorohydrin
U001	75–07–0	Ethanal (I)
U404	121–44–8	Ethanamine, N,N-diethyl-
U174	55–18–5	Ethanamine, N-ethyl-N-nitroso-
U155	91–80–5	1,2-Ethanediamine, N,N-dimethyl-N′-2-pyridinyl-N′-(2-thienylmethyl)-
U067	106–93–4	Ethane, 1,2-dibromo-
U076	75–34–3	Ethane, 1,1-dichloro-
U077	107–06–2	Ethane, 1,2-dichloro-
U131	67–72–1	Ethane, hexachloro-
U024	111–91–1	Ethane, 1,1′-[methylenebis(oxy)]bis[2-chloro-
U117	60–29–7	Ethane, 1,1′-oxybis-(I)
U025	111–44–4	Ethane, 1,1′-oxybis[2-chloro-
U184	76–01–7	Ethane, pentachloro-
U208	630–20–6	Ethane, 1,1,1,2-tetrachloro-
U209	79–34–5	Ethane, 1,1,2,2-tetrachloro-
U218	62–55–5	Ethanethioamide
U226	71–55–6	Ethane, 1,1,1-trichloro-
U227	79–00–5	Ethane, 1,1,2-trichloro-
U410	59669–26–0	Ethanimidothioic acid, N,N′- [thiobis [(methylimino)carbonyloxy]]bis-, dimethyl ester
U394	30558–43–1	Ethanimidothioic acid, 2-(dimethylamino)-N-hydroxy-2-oxo-, methyl ester.

U359	110–80–5	Ethanol, 2-ethoxy-
U173	1116–54–7	Ethanol, 2,2′-(nitrosoimino)bis-
U395	5952–26–1	Ethanol, 2,2′-oxybis-, dicarbamate.
U004	98–86–2	Ethanone, 1-phenyl-
U043	75–01–4	Ethene, chloro-
U042	110–75–8	Ethene, (2-chloroethoxy)-
U078	75–35–4	Ethene, 1,1-dichloro-
U079	156–60–5	Ethene, 1,2-dichloro-, (E)-
U210	127–18–4	Ethene, tetrachloro-
U228	79–01–6	Ethene, trichloro-
U112	141–78–6	Ethyl acetate (I)
U113	140–88–5	Ethyl acrylate (I)
U238	51–79–6	Ethyl carbamate (urethane)
U117	60–29–7	Ethyl ether (I)
U114	[1]111–54–6	Ethylenebisdithiocarbamic acid, salts & esters
U067	106–93–4	Ethylene dibromide
U077	107–06–2	Ethylene dichloride
U359	110–80–5	Ethylene glycol monoethyl ether
U115	75–21–8	Ethylene oxide (I,T)
U116	96–45–7	Ethylenethiourea
U076	75–34–3	Ethylidene dichloride
U118	97–63–2	Ethyl methacrylate
U119	62–50–0	Ethyl methanesulfonate
U120	206–44–0	Fluoranthene
U122	50–00–0	Formaldehyde
U123	64–18–6	Formic acid (C,T)
U124	110–00–9	Furan (I)
U125	98–01–1	2-Furancarboxaldehyde (I)
U147	108–31–	2,5-Furandione

	6	
U213	109–99–9	Furan, tetrahydro-(I)
U125	98–01–1	Furfural (I)
U124	110–00–9	Furfuran (I)
U206	18883–66–4	Glucopyranose, 2-deoxy-2-(3-methyl-3-nitrosoureido)-, D-
U206	18883–66–4	D-Glucose, 2-deoxy-2-[[(methylnitrosoamino)-carbonyl]amino]-
U126	765–34–4	Glycidylaldehyde
U163	70–25–7	Guanidine, N-methyl-N′-nitro-N-nitroso-
U127	118–74–1	Hexachlorobenzene
U128	87–68–3	Hexachlorobutadiene
U130	77–47–4	Hexachlorocyclopentadiene
U131	67–72–1	Hexachloroethane
U132	70–30–4	Hexachlorophene
U243	1888–71–7	Hexachloropropene
U133	302–01–2	Hydrazine (R,T)
U086	1615–80–1	Hydrazine, 1,2-diethyl-
U098	57–14–7	Hydrazine, 1,1-dimethyl-
U099	540–73–8	Hydrazine, 1,2-dimethyl-
U109	122–66–7	Hydrazine, 1,2-diphenyl-
U134	7664–39–3	Hydrofluoric acid (C,T)
U134	7664–39–3	Hydrogen fluoride (C,T)
U135	7783–06–4	Hydrogen sulfide
U135	7783–06–4	Hydrogen sulfide H_2S
U096	80–15–9	Hydroperoxide, 1-methyl-1-phenylethyl- (R)
U116	96–45–7	2-Imidazolidinethione
U137	193–39–5	Indeno[1,2,3-cd]pyrene
U190	85–44–9	1,3-Isobenzofurandione

U140	78–83–1	Isobutyl alcohol (I,T)
U141	120–58–1	Isosafrole
U142	143–50–0	Kepone
U143	303–34–4	Lasiocarpine
U144	301–04–2	Lead acetate
U146	1335–32–6	Lead, bis(acetato-O)tetrahydroxytri-
U145	7446–27–7	Lead phosphate
U146	1335–32–6	Lead subacetate
U129	58–89–9	Lindane
U163	70–25–7	MNNG
U147	108–31–6	Maleic anhydride
U148	123–33–1	Maleic hydrazide
U149	109–77–3	Malononitrile
U150	148–82–3	Melphalan
U151	7439–97–6	Mercury
U152	126–98–7	Methacrylonitrile (I, T)
U092	124–40–3	Methanamine, N-methyl- (I)
U029	74–83–9	Methane, bromo-
U045	74–87–3	Methane, chloro- (I, T)
U046	107–30–2	Methane, chloromethoxy-
U068	74–95–3	Methane, dibromo-
U080	75–09–2	Methane, dichloro-
U075	75–71–8	Methane, dichlorodifluoro-
U138	74–88–4	Methane, iodo-
U119	62–50–0	Methanesulfonic acid, ethyl ester
U211	56–23–5	Methane, tetrachloro-
U153	74–93–1	Methanethiol (I, T)
U225	75–25–2	Methane, tribromo-

U044	67–66–3	Methane, trichloro-
U121	75–69–4	Methane, trichlorofluoro-
U036	57–74–9	4,7-Methano-1H-indene, 1,2,4,5,6,7,8,8-octachloro-2,3,3a,4,7,7a-hexahydro-
U154	67–56–1	Methanol (I)
U155	91–80–5	Methapyrilene
U142	143–50–0	1,3,4-Metheno-2H-cyclobuta[cd]pentalen-2-one, 1,1a,3,3a,4,5,5,5a,5b,6-decachlorooctahydro-
U247	72–43–5	Methoxychlor
U154	67–56–1	Methyl alcohol (I)
U029	74–83–9	Methyl bromide
U186	504–60–9	1-Methylbutadiene (I)
U045	74–87–3	Methyl chloride (I,T)
U156	79–22–1	Methyl chlorocarbonate (I,T)
U226	71–55–6	Methyl chloroform
U157	56–49–5	3-Methylcholanthrene
U158	101–14–4	4,4'-Methylenebis(2-chloroaniline)
U068	74–95–3	Methylene bromide
U080	75–09–2	Methylene chloride
U159	78–93–3	Methyl ethyl ketone (MEK) (I,T)
U160	1338–23–4	Methyl ethyl ketone peroxide (R,T)
U138	74–88–4	Methyl iodide
U161	108–10–1	Methyl isobutyl ketone (I)
U162	80–62–6	Methyl methacrylate (I,T)
U161	108–10–1	4-Methyl-2-pentanone (I)
U164	56–04–2	Methylthiouracil
U010	50–07–7	Mitomycin C
U059	20830–81–3	5,12-Naphthacenedione, 8-acetyl-10-[(3-amino-2,3,6-trideoxy)-alpha-L-lyxo-hexopyranosyl)oxy]-7,8,9,10-tetrahydro-6,8,11-trihydroxy-1-methoxy-, (8S-cis)-
U167	134–32–7	1-Naphthalenamine
U168	91–59–8	2-Naphthalenamine
U026	494–03–1	Naphthalenamine, N,N'-bis(2-chloroethyl)-
U165	91–20–3	Naphthalene

U047	91–58–7	Naphthalene, 2-chloro-
U166	130–15–4	1,4-Naphthalenedione
U236	72–57–1	2,7-Naphthalenedisulfonic acid, 3,3′-[(3,3′-dimethyl[1,1′-biphenyl]-4,4′-diyl)bis(azo)bis [5-amino-4-hydroxy]-, tetrasodium salt
U279	63–25–2	1-Naphthalenol, methylcarbamate.
U166	130–15–4	1,4-Naphthoquinone
U167	134–32–7	alpha-Naphthylamine
U168	91–59–8	beta-Naphthylamine
U217	10102–45–1	Nitric acid, thallium(1+) salt
U169	98–95–3	Nitrobenzene (I,T)
U170	100–02–7	p-Nitrophenol
U171	79–46–9	2-Nitropropane (I,T)
U172	924–16–3	N-Nitrosodi-n-butylamine
U173	1116–54–7	N-Nitrosodiethanolamine
U174	55–18–5	N-Nitrosodiethylamine
U176	759–73–9	N-Nitroso-N-ethylurea
U177	684–93–5	N-Nitroso-N-methylurea
U178	615–53–2	N-Nitroso-N-methylurethane
U179	100–75–4	N-Nitrosopiperidine
U180	930–55–2	N-Nitrosopyrrolidine
U181	99–55–8	5-Nitro-o-toluidine
U193	1120–71–4	1,2-Oxathiolane, 2,2-dioxide
U058	50–18–0	2H-1,3,2-Oxazaphosphorin-2-amine, N,N-bis(2-chloroethyl)tetrahydro-, 2-oxide
U115	75–21–8	Oxirane (I,T)
U126	765–34–4	Oxiranecarboxyaldehyde
U041	106–89–8	Oxirane, (chloromethyl)-
U182	123–63–	Paraldehyde

	7	
U183	608–93–5	Pentachlorobenzene
U184	76–01–7	Pentachloroethane
U185	82–68–8	Pentachloronitrobenzene (PCNB)
See F027	87–86–5	Pentachlorophenol
U161	108–10–1	Pentanol, 4-methyl-
U186	504–60–9	1,3-Pentadiene (I)
U187	62–44–2	Phenacetin
U188	108–95–2	Phenol
U048	95–57–8	Phenol, 2-chloro-
U039	59–50–7	Phenol, 4-chloro-3-methyl-
U081	120–83–2	Phenol, 2,4-dichloro-
U082	87–65–0	Phenol, 2,6-dichloro-
U089	56–53–1	Phenol, 4,4′-(1,2-diethyl-1,2-ethenediyl)bis-, (E)-
U101	105–67–9	Phenol, 2,4-dimethyl-
U052	1319–77–3	Phenol, methyl-
U132	70–30–4	Phenol, 2,2′-methylenebis[3,4,6-trichloro-
U411	114–26–1	Phenol, 2-(1-methylethoxy)-, methylcarbamate.
U170	100–02–7	Phenol, 4-nitro-
See F027	87–86–5	Phenol, pentachloro-
See F027	58–90–2	Phenol, 2,3,4,6-tetrachloro-
See F027	95–95–4	Phenol, 2,4,5-trichloro-
See F027	88–06–2	Phenol, 2,4,6-trichloro-
U150	148–82–3	L-Phenylalanine, 4-[bis(2-chloroethyl)amino]-
U145	7446–27–7	Phosphoric acid, lead(2+) salt (2:3)
U087	3288–58–2	Phosphorodithioic acid, O,O-diethyl S-methyl ester
U189	1314–80–3	Phosphorus sulfide (R)
U190	85–44–9	Phthalic anhydride
U191	109–06–	2-Picoline

	8	
U179	100–75–4	Piperidine, 1-nitroso-
U192	23950–58–5	Pronamide
U194	107–10–8	1-Propanamine (I,T)
U111	621–64–7	1-Propanamine, N-nitroso-N-propyl-
U110	142–84–7	1-Propanamine, N-propyl- (I)
U066	96–12–8	Propane, 1,2-dibromo-3-chloro-
U083	78–87–5	Propane, 1,2-dichloro-
U149	109–77–3	Propanedinitrile
U171	79–46–9	Propane, 2-nitro- (I,T)
U027	108–60–1	Propane, 2,2′-oxybis[2-chloro-
U193	1120–71–4	1,3-Propane sultone
See F027	93–72–1	Propanoic acid, 2-(2,4,5-trichlorophenoxy)-
U235	126–72–7	1-Propanol, 2,3-dibromo-, phosphate (3:1)
U140	78–83–1	1-Propanol, 2-methyl- (I,T)
U002	67–64–1	2-Propanone (I)
U007	79–06–1	2-Propenamide
U084	542–75–6	1-Propene, 1,3-dichloro-
U243	1888–71–7	1-Propene, 1,1,2,3,3,3-hexachloro-
U009	107–13–1	2-Propenenitrile
U152	126–98–7	2-Propenenitrile, 2-methyl- (I,T)
U008	79–10–7	2-Propenoic acid (I)
U113	140–88–5	2-Propenoic acid, ethyl ester (I)
U118	97–63–2	2-Propenoic acid, 2-methyl-, ethyl ester
U162	80–62–6	2-Propenoic acid, 2-methyl-, methyl ester (I,T)
U373	122–42–9	Propham.
U411	114–26–1	Propoxur.

U387	52888–80–9	Prosulfocarb.
U194	107–10–8	n-Propylamine (I,T)
U083	78–87–5	Propylene dichloride
U148	123–33–1	3,6-Pyridazinedione, 1,2-dihydro-
U196	110–86–1	Pyridine
U191	109–06–8	Pyridine, 2-methyl-
U237	66–75–1	2,4-(1H,3H)-Pyrimidinedione, 5-[bis(2-chloroethyl)amino]-
U164	56–04–2	4(1H)-Pyrimidinone, 2,3-dihydro-6-methyl-2-thioxo-
U180	930–55–2	Pyrrolidine, 1-nitroso-
U200	50–55–5	Reserpine
U201	108–46–3	Resorcinol
U202	[1]81–07–2	Saccharin, & salts
U203	94–59–7	Safrole
U204	7783–00–8	Selenious acid
U204	7783–00–8	Selenium dioxide
U205	7488–56–4	Selenium sulfide
U205	7488–56–4	Selenium sulfide SeS_2(R,T)
U015	115–02–6	L-Serine, diazoacetate (ester)
See F027	93–72–1	Silvex (2,4,5-TP)
U206	18883–66–4	Streptozotocin
U103	77–78–1	Sulfuric acid, dimethyl ester
U189	1314–80–3	Sulfur phosphide (R)
See F027	93–76–5	2,4,5-T
U207	95–94–3	1,2,4,5-Tetrachlorobenzene
U208	630–20–6	1,1,1,2-Tetrachloroethane
U209	79–34–5	1,1,2,2-Tetrachloroethane

U210	127–18–4	Tetrachloroethylene
See F027	58–90–2	2,3,4,6-Tetrachlorophenol
U213	109–99–9	Tetrahydrofuran (I)
U214	563–68–8	Thallium(I) acetate
U215	6533–73–9	Thallium(I) carbonate
U216	7791–12–0	Thallium(I) chloride
U216	7791–12–0	thallium chloride TlCl
U217	10102–45–1	Thallium(I) nitrate
U218	62–55–5	Thioacetamide
U410	59669–26–0	Thiodicarb.
U153	74–93–1	Thiomethanol (I,T)
U244	137–26–8	Thioperoxydicarbonic diamide $[(H_2N)C(S)]_2S_2$, tetramethyl-
U409	23564–05–8	Thiophanate-methyl.
U219	62–56–6	Thiourea
U244	137–26–8	Thiram
U220	108–88–3	Toluene
U221	25376–45–8	Toluenediamine
U223	26471–62–5	Toluene diisocyanate (R,T)
U328	95–53–4	o-Toluidine
U353	106–49–0	p-Toluidine
U222	636–21–5	o-Toluidine hydrochloride
U389	2303–17–5	Triallate.
U011	61–82–5	1H-1,2,4-Triazol-3-amine
U226	71–55–6	1,1,1-Trichloroethane
U227	79–00–5	1,1,2-Trichloroethane
U228	79–01–6	Trichloroethylene

EPAPA011000098

U121	75–69–4	Trichloromonofluoromethane
See F027	95–95–4	2,4,5-Trichlorophenol
See F027	88–06–2	2,4,6-Trichlorophenol
U404	121–44–8	Triethylamine.
U234	99–35–4	1,3,5-Trinitrobenzene (R,T)
U182	123–63–7	1,3,5-Trioxane, 2,4,6-trimethyl-
U235	126–72–7	Tris(2,3-dibromopropyl) phosphate
U236	72–57–1	Trypan blue
U237	66–75–1	Uracil mustard
U176	759–73–9	Urea, N-ethyl-N-nitroso-
U177	684–93–5	Urea, N-methyl-N-nitroso-
U043	75–01–4	Vinyl chloride
U248	[1]81–81–2	Warfarin, & salts, when present at concentrations of 0.3% or less
U239	1330–20–7	Xylene (I)
U200	50–55–5	Yohimban-16-carboxylic acid, 11,17-dimethoxy-18-[(3,4,5-trimethoxybenzoyl) oxy]-, methyl ester, (3beta,16beta,17alpha,18beta,20alpha)-
U249	1314–84–7	Zinc phosphide Zn_3P_2, when present at concentrations of 10% or less
U001	75–07–0	Acetaldehyde (I)
U001	75–07–0	Ethanal (I)
U002	67–64–1	Acetone (I)
U002	67–64–1	2-Propanone (I)
U003	75–05–8	Acetonitrile (I,T)
U004	98–86–2	Acetophenone
U004	98–86–2	Ethanone, 1-phenyl-
U005	53–96–3	Acetamide, -9H-fluoren-2-yl-
U005	53–96–3	2-Acetylaminofluorene
U006	75–36–5	Acetyl chloride (C,R,T)
U007	79–06–1	Acrylamide
U007	79–06–1	2-Propenamide
U008	79–10–7	Acrylic acid (I)
U008	79–10–7	2-Propenoic acid (I)
U009	107–13–	Acrylonitrile

	1	
U009	107–13–1	2-Propenenitrile
U010	50–07–7	Azirino[2',3':3,4]pyrrolo[1,2-a]indole-4,7-dione, 6-amino-8-[[(aminocarbonyl)oxy]methyl]-1,1a,2,8,8a,8b-hexahydro-8a-methoxy-5-methyl-, [1aS-(1aalpha, 8beta,8aalpha,8balpha)]-
U010	50–07–7	Mitomycin C
U011	61–82–5	Amitrole
U011	61–82–5	1H-1,2,4-Triazol-3-amine
U012	62–53–3	Aniline (I,T)
U012	62–53–3	Benzenamine (I,T)
U014	492–80–8	Auramine
U014	492–80–8	Benzenamine, 4,4'-carbonimidoylbis[N,N-dimethyl-
U015	115–02–6	Azaserine
U015	115–02–6	L-Serine, diazoacetate (ester)
U016	225–51–4	Benz[c]acridine
U017	98–87–3	Benzal chloride
U017	98–87–3	Benzene, (dichloromethyl)-
U018	56–55–3	Benz[a]anthracene
U019	71–43–2	Benzene (I,T)
U020	98–09–9	Benzenesulfonic acid chloride (C,R)
U020	98–09–9	Benzenesulfonyl chloride (C,R)
U021	92–87–5	Benzidine
U021	92–87–5	[1,1'-Biphenyl]-4,4'-diamine
U022	50–32–8	Benzo[a]pyrene
U023	98–07–7	Benzene, (trichloromethyl)-
U023	98–07–7	Benzotrichloride (C,R,T)
U024	111–91–1	Dichloromethoxy ethane
U024	111–91–1	Ethane, 1,1'-[methylenebis(oxy)]bis[2-chloro-
U025	111–44–4	Dichloroethyl ether
U025	111–44–4	Ethane, 1,1'-oxybis[2-chloro-
U026	494–03–	Chlornaphazin

	1	
U026	494–03–1	Naphthalenamine, N,N'-bis(2-chloroethyl)-
U027	108–60–1	Dichloroisopropyl ether
U027	108–60–1	Propane, 2,2'-oxybis[2-chloro-
U028	117–81–7	1,2-Benzenedicarboxylic acid, bis(2-ethylhexyl) ester
U028	117–81–7	Diethylhexyl phthalate
U029	74–83–9	Methane, bromo-
U029	74–83–9	Methyl bromide
U030	101–55–3	Benzene, 1-bromo-4-phenoxy-
U030	101–55–3	4-Bromophenyl phenyl ether
U031	71–36–3	1-Butanol (I)
U031	71–36–3	n-Butyl alcohol (I)
U032	13765–19–0	Calcium chromate
U032	13765–19–0	Chromic acid H_2CrO_4, calcium salt
U033	353–50–4	Carbonic difluoride
U033	353–50–4	Carbon oxyfluoride (R,T)
U034	75–87–6	Acetaldehyde, trichloro-
U034	75–87–6	Chloral
U035	305–03–3	Benzenebutanoic acid, 4-[bis(2-chloroethyl) amino]-
U035	305–03–3	Chlorambucil
U036	57–74–9	Chlordane, alpha & gamma isomers
U036	57–74–9	4,7-Methano-1H-indene, 1,2,4,5,6,7,8,8-octachloro-2,3,3a,4,7,7a-hexahydro-
U037	108–90–7	Benzene, chloro-
U037	108–90–7	Chlorobenzene
U038	510–15–6	Benzeneacetic acid, 4-chloro-alpha-(4-chlorophenyl)-alpha-hydroxy-, ethyl ester
U038	510–15–6	Chlorobenzilate

U039	59–50–7	p-Chloro-m-cresol
U039	59–50–7	Phenol, 4-chloro-3-methyl-
U041	106–89–8	Epichlorohydrin
U041	106–89–8	Oxirane, (chloromethyl)-
U042	110–75–8	2-Chloroethyl vinyl ether
U042	110–75–8	Ethene, (2-chloroethoxy)-
U043	75–01–4	Ethene, chloro-
U043	75–01–4	Vinyl chloride
U044	67–66–3	Chloroform
U044	67–66–3	Methane, trichloro-
U045	74–87–3	Methane, chloro- (I,T)
U045	74–87–3	Methyl chloride (I,T)
U046	107–30–2	Chloromethyl methyl ether
U046	107–30–2	Methane, chloromethoxy-
U047	91–58–7	beta-Chloronaphthalene
U047	91–58–7	Naphthalene, 2-chloro-
U048	95–57–8	o-Chlorophenol
U048	95–57–8	Phenol, 2-chloro-
U049	3165–93–3	Benzenamine, 4-chloro-2-methyl-, hydrochloride
U049	3165–93–3	4-Chloro-o-toluidine, hydrochloride
U050	218–01–9	Chrysene
U051		Creosote
U052	1319–77–3	Cresol (Cresylic acid)
U052	1319–77–3	Phenol, methyl-
U053	4170–30–3	2-Butenal
U053	4170–30–3	Crotonaldehyde
U055	98–82–8	Benzene, (1-methylethyl)-(I)
U055	98–82–8	Cumene (I)
U056	110–82–7	Benzene, hexahydro-(I)

U056	110–82–7	Cyclohexane (I)
U057	108–94–1	Cyclohexanone (I)
U058	50–18–0	Cyclophosphamide
U058	50–18–0	2H-1,3,2-Oxazaphosphorin-2-amine, N,N-bis (2-chloroethyl)tetrahydro-, 2-oxide
U059	20830–81–3	Daunomycin
U059	20830–81–3	5,12-Naphthacenedione, 8-acetyl-10-[(3-amino-2,3,6-trideoxy)-alpha-L-lyxo-hexopyranosyl)oxy]-7,8,9,10-tetrahydro-6,8,11-trihydroxy-1-methoxy-, (8S-cis)-
U060	72–54–8	Benzene, 1,1'-(2,2-dichloroethylidene)bis[4-chloro-
U060	72–54–8	DDD
U061	50–29–3	Benzene, 1,1'-(2,2,2-trichloroethylidene)bis [4-chloro-
U061	50–29–3	DDT
U062	2303–16–4	Carbamothioic acid, bis(1-methylethyl)-, S-(2,3-di chloro-2-propenyl) ester
U062	2303–16–4	Diallate
U063	53–70–3	Dibenz[a,h]anthracene
U064	189–55–9	Benzo[rst]pentaphene
U064	189–55–9	Dibenzo[a,i]pyrene
U066	96–12–8	1,2-Dibromo-3-chloropropane
U066	96–12–8	Propane, 1,2-dibromo-3-chloro-
U067	106–93–4	Ethane, 1,2-dibromo-
U067	106–93–4	Ethylene dibromide
U068	74–95–3	Methane, dibromo-
U068	74–95–3	Methylene bromide
U069	84–74–2	1,2-Benzenedicarboxylic acid, dibutyl ester
U069	84–74–2	Dibutyl phthalate
U070	95–50–1	Benzene, 1,2-dichloro-
U070	95–50–1	o-Dichlorobenzene
U071	541–73–1	Benzene, 1,3-dichloro-
U071	541–73–1	m-Dichlorobenzene

U072	106–46–7	Benzene, 1,4-dichloro-
U072	106–46–7	p-Dichlorobenzene
U073	91–94–1	[1,1'-Biphenyl]-4,4'-diamine, 3,3'-dichloro-
U073	91–94–1	3,3'-Dichlorobenzidine
U074	764–41–0	2-Butene, 1,4-dichloro-(I,T)
U074	764–41–0	1,4-Dichloro-2-butene (I,T)
U075	75–71–8	Dichlorodifluoromethane
U075	75–71–8	Methane, dichlorodifluoro-
U076	75–34–3	Ethane, 1,1-dichloro-
U076	75–34–3	Ethylidene dichloride
U077	107–06–2	Ethane, 1,2-dichloro-
U077	107–06–2	Ethylene dichloride
U078	75–35–4	1,1-Dichloroethylene
U078	75–35–4	Ethene, 1,1-dichloro-
U079	156–60–5	1,2-Dichloroethylene
U079	156–60–5	Ethene, 1,2-dichloro-, (E)-
U080	75–09–2	Methane, dichloro-
U080	75–09–2	Methylene chloride
U081	120–83–2	2,4-Dichlorophenol
U081	120–83–2	Phenol, 2,4-dichloro-
U082	87–65–0	2,6-Dichlorophenol
U082	87–65–0	Phenol, 2,6-dichloro-
U083	78–87–5	Propane, 1,2-dichloro-
U083	78–87–5	Propylene dichloride
U084	542–75–6	1,3-Dichloropropene
U084	542–75–6	1-Propene, 1,3-dichloro-
U085	1464–53–5	2,2'-Bioxirane
U085	1464–53–5	1,2:3,4-Diepoxybutane (I,T)
U086	1615–	N,N'-Diethylhydrazine

	80–1	
U086	1615–80–1	Hydrazine, 1,2-diethyl-
U087	3288–58–2	O,O-Diethyl S-methyl dithiophosphate
U087	3288–58–2	Phosphorodithioic acid, O,O-diethyl S-methyl ester
U088	84–66–2	1,2-Benzenedicarboxylic acid, diethyl ester
U088	84–66–2	Diethyl phthalate
U089	56–53–1	Diethylstilbesterol
U089	56–53–1	Phenol, 4,4'-(1,2-diethyl-1,2-ethenediyl)bis-, (E)-
U090	94–58–6	1,3-Benzodioxole, 5-propyl-
U090	94–58–6	Dihydrosafrole
U091	119–90–4	[1,1'-Biphenyl]-4,4'-diamine, 3,3'-dimethoxy-
U091	119–90–4	3,3'-Dimethoxybenzidine
U092	124–40–3	Dimethylamine (I)
U092	124–40–3	Methanamine, -methyl-(I)
U093	60–11–7	Benzenamine, N,N-dimethyl-4-(phenylazo)-
U093	60–11–7	p-Dimethylaminoazobenzene
U094	57–97–6	Benz[a]anthracene, 7,12-dimethyl-
U094	57–97–6	7,12-Dimethylbenz[a]anthracene
U095	119–93–7	[1,1'-Biphenyl]-4,4'-diamine, 3,3'-dimethyl-
U095	119–93–7	3,3'-Dimethylbenzidine
U096	80–15–9	alpha,alpha-Dimethylbenzylhydroperoxide (R)
U096	80–15–9	Hydroperoxide, 1-methyl-1-phenylethyl-(R)
U097	79–44–7	Carbamic chloride, dimethyl-
U097	79–44–7	Dimethylcarbamoyl chloride
U098	57–14–7	1,1-Dimethylhydrazine
U098	57–14–7	Hydrazine, 1,1-dimethyl-
U099	540–73–8	1,2-Dimethylhydrazine
U099	540–73–8	Hydrazine, 1,2-dimethyl-
U101	105–67–9	2,4-Dimethylphenol

U101	105–67–9	Phenol, 2,4-dimethyl-
U102	131–11–3	1,2-Benzenedicarboxylic acid, dimethyl ester
U102	131–11–3	Dimethyl phthalate
U103	77–78–1	Dimethyl sulfate
U103	77–78–1	Sulfuric acid, dimethyl ester
U105	121–14–2	Benzene, 1-methyl-2,4-dinitro-
U105	121–14–2	2,4-Dinitrotoluene
U106	606–20–2	Benzene, 2-methyl-1,3-dinitro-
U106	606–20–2	2,6-Dinitrotoluene
U107	117–84–0	1,2-Benzenedicarboxylic acid, dioctyl ester
U107	117–84–0	Di-n-octyl phthalate
U108	123–91–1	1,4-Diethyleneoxide
U108	123–91–1	1,4-Dioxane
U109	122–66–7	1,2-Diphenylhydrazine
U109	122–66–7	Hydrazine, 1,2-diphenyl-
U110	142–84–7	Dipropylamine (I)
U110	142–84–7	1-Propanamine, N-propyl-(I)
U111	621–64–7	Di-n-propylnitrosamine
U111	621–64–7	1-Propanamine, N-nitroso-N-propyl-
U112	141–78–6	Acetic acid ethyl ester (I)
U112	141–78–6	Ethyl acetate (I)
U113	140–88–5	Ethyl acrylate (I)
U113	140–88–5	2-Propenoic acid, ethyl ester (I)

U114	[1]111–54–6	Carbamodithioic acid, 1,2-ethanediylbis-, salts & esters
U114	[1]111–54–6	Ethylenebisdithiocarbamic acid, salts & esters
U115	75–21–8	Ethylene oxide (I,T)
U115	75–21–8	Oxirane (I,T)
U116	96–45–7	Ethylenethiourea
U116	96–45–7	2-Imidazolidinethione
U117	60–29–7	Ethane, 1,1'-oxybis-(I)
U117	60–29–7	Ethyl ether (I)
U118	97–63–2	Ethyl methacrylate
U118	97–63–2	2-Propenoic acid, 2-methyl-, ethyl ester
U119	62–50–0	Ethyl methanesulfonate
U119	62–50–0	Methanesulfonic acid, ethyl ester
U120	206–44–0	Fluoranthene
U121	75–69–4	Methane, trichlorofluoro-
U121	75–69–4	Trichloromonofluoromethane
U122	50–00–0	Formaldehyde
U123	64–18–6	Formic acid (C,T)
U124	110–00–9	Furan (I)
U124	110–00–9	Furfuran (I)
U125	98–01–1	2-Furancarboxaldehyde (I)
U125	98–01–1	Furfural (I)
U126	765–34–4	Glycidylaldehyde
U126	765–34–4	Oxiranecarboxyaldehyde
U127	118–74–1	Benzene, hexachloro-
U127	118–74–1	Hexachlorobenzene
U128	87–68–3	1,3-Butadiene, 1,1,2,3,4,4-hexachloro-
U128	87–68–3	Hexachlorobutadiene
U129	58–89–9	Cyclohexane, 1,2,3,4,5,6-hexachloro-, (1alpha,2alpha,3beta,4alpha,5alpha,6beta)-
U129	58–89–9	Lindane
U130	77–47–4	1,3-Cyclopentadiene, 1,2,3,4,5,5-hexachloro-
U130	77–47–4	Hexachlorocyclopentadiene

U131	67–72–1	Ethane, hexachloro-
U131	67–72–1	Hexachloroethane
U132	70–30–4	Hexachlorophene
U132	70–30–4	Phenol, 2,2'-methylenebis[3,4,6-trichloro-
U133	302–01–2	Hydrazine (R,T)
U134	7664–39–3	Hydrofluoric acid (C,T)
U134	7664–39–3	Hydrogen fluoride (C,T)
U135	7783–06–4	Hydrogen sulfide
U135	7783–06–4	Hydrogen sulfide H_2S
U136	75–60–5	Arsinic acid, dimethyl-
U136	75–60–5	Cacodylic acid
U137	193–39–5	Indeno[1,2,3-cd]pyrene
U138	74–88–4	Methane, iodo-
U138	74–88–4	Methyl iodide
U140	78–83–1	Isobutyl alcohol (I,T)
U140	78–83–1	1-Propanol, 2-methyl- (I,T)
U141	120–58–1	1,3-Benzodioxole, 5-(1-propenyl)-
U141	120–58–1	Isosafrole
U142	143–50–0	Kepone
U142	143–50–0	1,3,4-Metheno-2H-cyclobuta[cd]pentalen-2-one, 1,1a,3,3a,4,5,5,5a,5b,6-decachlorooctahydro-
U143	303–34–4	2-Butenoic acid, 2-methyl-, 7-[[2,3-dihydroxy-2-(1-methoxyethyl)-3-methyl-1-oxobutoxy] methyl]-2,3,5,7a-tetrahydro-1H-pyrrolizin-1-yl ester, [1S-[1alpha(Z),7(2S*,3R*),7aalpha]]-
U143	303–34–4	Lasiocarpine
U144	301–04–2	Acetic acid, lead(2+) salt
U144	301–04–2	Lead acetate
U145	7446–27–7	Lead phosphate
U145	7446–	Phosphoric acid, lead(2+) salt (2:3)

	27–7	
U146	1335–32–6	Lead, bis(acetato-O)tetrahydroxytri-
U146	1335–32–6	Lead subacetate
U147	108–31–6	2,5-Furandione
U147	108–31–6	Maleic anhydride
U148	123–33–1	Maleic hydrazide
U148	123–33–1	3,6-Pyridazinedione, 1,2-dihydro-
U149	109–77–3	Malononitrile
U149	109–77–3	Propanedinitrile
U150	148–82–3	Melphalan
U150	148–82–3	L-Phenylalanine, 4-[bis(2-chloroethyl)amino]-
U151	7439–97–6	Mercury
U152	126–98–7	Methacrylonitrile (I,T)
U152	126–98–7	2-Propenenitrile, 2-methyl- (I,T)
U153	74–93–1	Methanethiol (I,T)
U153	74–93–1	Thiomethanol (I,T)
U154	67–56–1	Methanol (I)
U154	67–56–1	Methyl alcohol (I)
U155	91–80–5	1,2-Ethanediamine, N,N-dimethyl-N'-2-pyridinyl-N'-(2-thienylmethyl)-
U155	91–80–5	Methapyrilene
U156	79–22–1	Carbonochloridic acid, methyl ester (I,T)
U156	79–22–1	Methyl chlorocarbonate (I,T)
U157	56–49–5	Benz[j]aceanthrylene, 1,2-dihydro-3-methyl-
U157	56–49–5	3-Methylcholanthrene
U158	101–14–4	Benzenamine, 4,4'-methylenebis[2-chloro-
U158	101–14–4	4,4'-Methylenebis(2-chloroaniline)
U159	78–93–3	2-Butanone (I,T)

U159	78–93–3	Methyl ethyl ketone (MEK) (I,T)
U160	1338–23–4	2-Butanone, peroxide (R,T)
U160	1338–23–4	Methyl ethyl ketone peroxide (R,T)
U161	108–10–1	Methyl isobutyl ketone (I)
U161	108–10–1	4-Methyl-2-pentanone (I)
U161	108–10–1	Pentanol, 4-methyl-
U162	80–62–6	Methyl methacrylate (I,T)
U162	80–62–6	2-Propenoic acid, 2-methyl-, methyl ester (I,T)
U163	70–25–7	Guanidine, -methyl-N'-nitro-N-nitroso-
U163	70–25–7	MNNG
U164	56–04–2	Methylthiouracil
U164	56–04–2	4(1H)-Pyrimidinone, 2,3-dihydro-6-methyl-2-thioxo-
U165	91–20–3	Naphthalene
U166	130–15–4	1,4-Naphthalenedione
U166	130–15–4	1,4-Naphthoquinone
U167	134–32–7	1-Naphthalenamine
U167	134–32–7	alpha-Naphthylamine
U168	91–59–8	2-Naphthalenamine
U168	91–59–8	beta-Naphthylamine
U169	98–95–3	Benzene, nitro-
U169	98–95–3	Nitrobenzene (I,T)
U170	100–02–7	p-Nitrophenol
U170	100–02–7	Phenol, 4-nitro-
U171	79–46–9	2-Nitropropane (I,T)
U171	79–46–9	Propane, 2-nitro- (I,T)
U172	924–16–3	1-Butanamine, N-butyl-N-nitroso-
U172	924–16–3	N-Nitrosodi-n-butylamine
U173	1116–	Ethanol, 2,2'-(nitrosoimino)bis-

	54–7	
U173	1116–54–7	N-Nitrosodiethanolamine
U174	55–18–5	Ethanamine, -ethyl-N-nitroso-
U174	55–18–5	N-Nitrosodiethylamine
U176	759–73–9	N-Nitroso-N-ethylurea
U176	759–73–9	Urea, N-ethyl-N-nitroso-
U177	684–93–5	N-Nitroso-N-methylurea
U177	684–93–5	Urea, N-methyl-N-nitroso-
U178	615–53–2	Carbamic acid, methylnitroso-, ethyl ester
U178	615–53–2	N-Nitroso-N-methylurethane
U179	100–75–4	N-Nitrosopiperidine
U179	100–75–4	Piperidine, 1-nitroso-
U180	930–55–2	N-Nitrosopyrrolidine
U180	930–55–2	Pyrrolidine, 1-nitroso-
U181	99–55–8	Benzenamine, 2-methyl-5-nitro-
U181	99–55–8	5-Nitro-o-toluidine
U182	123–63–7	1,3,5-Trioxane, 2,4,6-trimethyl-
U182	123–63–7	Paraldehyde
U183	608–93–5	Benzene, pentachloro-
U183	608–93–5	Pentachlorobenzene
U184	76–01–7	Ethane, pentachloro-
U184	76–01–7	Pentachloroethane
U185	82–68–8	Benzene, pentachloronitro-
U185	82–68–8	Pentachloronitrobenzene (PCNB)
U186	504–60–9	1-Methylbutadiene (I)
U186	504–60–9	1,3-Pentadiene (I)
U187	62–44–2	Acetamide, -(4-ethoxyphenyl)-

U187	62–44–2	Phenacetin
U188	108–95–2	Phenol
U189	1314–80–3	Phosphorus sulfide (R)
U189	1314–80–3	Sulfur phosphide (R)
U190	85–44–9	1,3-Isobenzofurandione
U190	85–44–9	Phthalic anhydride
U191	109–06–8	2-Picoline
U191	109–06–8	Pyridine, 2-methyl-
U192	23950–58–5	Benzamide, 3,5-dichloro-N-(1,1-dimethyl-2-propynyl)-
U192	23950–58–5	Pronamide
U193	1120–71–4	1,2-Oxathiolane, 2,2-dioxide
U193	1120–71–4	1,3-Propane sultone
U194	107–10–8	1-Propanamine (I,T)
U194	107–10–8	n-Propylamine (I,T)
U196	110–86–1	Pyridine
U197	106–51–4	p-Benzoquinone
U197	106–51–4	2,5-Cyclohexadiene-1,4-dione
U200	50–55–5	Reserpine
U200	50–55–5	Yohimban-16-carboxylic acid, 11,17-dimethoxy-18-[(3,4,5-trimethoxybenzoyl) oxy]-, methyl ester, (3beta,16beta,17alpha,18beta,20alpha)-
U201	108–46–3	1,3-Benzenediol
U201	108–46–3	Resorcinol
U202	181–07–2	1,2-Benzisothiazol-3(2H)-one, 1,1-dioxide, & salts
U202	181–07–2	Saccharin, & salts

U203	94–59–7	1,3-Benzodioxole, 5-(2-propenyl)-
U203	94–59–7	Safrole
U204	7783–00–8	Selenious acid
U204	7783–00–8	Selenium dioxide
U205	7488–56–4	Selenium sulfide
U205	7488–56–4	Selenium sulfide SeS_2(R,T)
U206	18883–66–4	Glucopyranose, 2-deoxy-2-(3-methyl-3-nitrosoureido)-, D-
U206	18883–66–4	D-Glucose, 2-deoxy-2-[[(methylnitrosoamino)-carbonyl]amino]-
U206	18883–66–4	Streptozotocin
U207	95–94–3	Benzene, 1,2,4,5-tetrachloro-
U207	95–94–3	1,2,4,5-Tetrachlorobenzene
U208	630–20–6	Ethane, 1,1,1,2-tetrachloro-
U208	630–20–6	1,1,1,2-Tetrachloroethane
U209	79–34–5	Ethane, 1,1,2,2-tetrachloro-
U209	79–34–5	1,1,2,2-Tetrachloroethane
U210	127–18–4	Ethene, tetrachloro-
U210	127–18–4	Tetrachloroethylene
U211	56–23–5	Carbon tetrachloride
U211	56–23–5	Methane, tetrachloro-
U213	109–99–9	Furan, tetrahydro-(I)
U213	109–99–9	Tetrahydrofuran (I)
U214	563–68–8	Acetic acid, thallium(1+) salt
U214	563–68–8	Thallium(I) acetate
U215	6533–73–9	Carbonic acid, dithallium(1+) salt
U215	6533–73–9	Thallium(I) carbonate
U216	7791–12–0	Thallium(I) chloride

U216	7791–12–0	Thallium chloride TlCl
U217	10102–45–1	Nitric acid, thallium(1+) salt
U217	10102–45–1	Thallium(I) nitrate
U218	62–55–5	Ethanethioamide
U218	62–55–5	Thioacetamide
U219	62–56–6	Thiourea
U220	108–88–3	Benzene, methyl-
U220	108–88–3	Toluene
U221	25376–45–8	Benzenediamine, ar-methyl-
U221	25376–45–8	Toluenediamine
U222	636–21–5	Benzenamine, 2-methyl-, hydrochloride
U222	636–21–5	o-Toluidine hydrochloride
U223	26471–62–5	Benzene, 1,3-diisocyanatomethyl- (R,T)
U223	26471–62–5	Toluene diisocyanate (R,T)
U225	75–25–2	Bromoform
U225	75–25–2	Methane, tribromo-
U226	71–55–6	Ethane, 1,1,1-trichloro-
U226	71–55–6	Methyl chloroform
U226	71–55–6	1,1,1-Trichloroethane
U227	79–00–5	Ethane, 1,1,2-trichloro-
U227	79–00–5	1,1,2-Trichloroethane
U228	79–01–6	Ethene, trichloro-
U228	79–01–6	Trichloroethylene
U234	99–35–4	Benzene, 1,3,5-trinitro-
U234	99–35–4	1,3,5-Trinitrobenzene (R,T)
U235	126–72–7	1-Propanol, 2,3-dibromo-, phosphate (3:1)
U235	126–72–7	Tris(2,3-dibromopropyl) phosphate
U236	72–57–1	2,7-Naphthalenedisulfonic acid, 3,3'-[(3,3'-dimethyl[1,1'-biphenyl]-4,4'-diyl)bis(azo)bis[5-amino-4-hydroxy]-, tetrasodium salt

U236	72–57–1	Trypan blue
U237	66–75–1	2,4-(1H,3H)-Pyrimidinedione, 5-[bis(2-chloroethyl)amino]-
U237	66–75–1	Uracil mustard
U238	51–79–6	Carbamic acid, ethyl ester
U238	51–79–6	Ethyl carbamate (urethane)
U239	1330–20–7	Benzene, dimethyl- (I,T)
U239	1330–20–7	Xylene (I)
U240	[1]94–75–7	Acetic acid, (2,4-dichlorophenoxy)-, salts & esters
U240	[1]94–75–7	2,4-D, salts & esters
U243	1888–71–7	Hexachloropropene
U243	1888–71–7	1-Propene, 1,1,2,3,3,3-hexachloro-
U244	137–26–8	Thioperoxydicarbonic diamide $[(H_2N)C(S)]_2S_2$, tetramethyl-
U244	137–26–8	Thiram
U246	506–68–3	Cyanogen bromide (CN)Br
U247	72–43–5	Benzene, 1,1'-(2,2,2-trichloroethylidene)bis [4- methoxy-
U247	72–43–5	Methoxychlor
U248	[1]81–81–2	2H-1-Benzopyran-2-one, 4-hydroxy-3-(3-oxo-1-phenyl-butyl)-, & salts, when present at concentrations of 0.3% or less
U248	[1]81–81–2	Warfarin, & salts, when present at concentrations of 0.3% or less
U249	1314–84–7	Zinc phosphide Zn_3P_2, when present at concentrations of 10% or less
U271	17804–35–2	Benomyl
U271	17804–35–2	Carbamic acid, [1-[(butylamino)carbonyl]-1H-benzimidazol-2-yl]-, methyl ester
U278	22781–23–3	Bendiocarb
U278	22781–23–3	1,3-Benzodioxol-4-ol, 2,2-dimethyl-, methyl carbamate
U279	63–25–2	Carbaryl
U279	63–25–2	1-Naphthalenol, methylcarbamate

U280	101–27–9	Barban
U280	101–27–9	Carbamic acid, (3-chlorophenyl)-, 4-chloro-2-butynyl ester
U328	95–53–4	Benzenamine, 2-methyl-
U328	95–53–4	o-Toluidine
U353	106–49–0	Benzenamine, 4-methyl-
U353	106–49–0	p-Toluidine
U359	110–80–5	Ethanol, 2-ethoxy-
U359	110–80–5	Ethylene glycol monoethyl ether
U364	22961–82–6	Bendiocarb phenol
U364	22961–82–6	1,3-Benzodioxol-4-ol, 2,2-dimethyl-,
U367	1563–38–8	7-Benzofuranol, 2,3-dihydro-2,2-dimethyl-
U367	1563–38–8	Carbofuran phenol
U372	10605–21–7	Carbamic acid, 1H-benzimidazol-2-yl, methyl ester
U372	10605–21–7	Carbendazim
U373	122–42–9	Carbamic acid, phenyl-, 1-methylethyl ester
U373	122–42–9	Propham
U387	52888–80–9	Carbamothioic acid, dipropyl-, S-(phenylmethyl) ester
U387	52888–80–9	Prosulfocarb
U389	2303–17–5	Carbamothioic acid, bis(1-methylethyl)-, S-(2,3,3-trichloro-2-propenyl) ester
U389	2303–17–5	Triallate
U394	30558–43–1	A2213
U394	30558–43–1	Ethanimidothioic acid, 2-(dimethylamino)-N-hydroxy-2-oxo-, methyl ester
U395	5952–26–1	Diethylene glycol, dicarbamate

U395	5952–26–1	Ethanol, 2,2'-oxybis-, dicarbamate
U404	121–44–8	Ethanamine, N,N-diethyl-
U404	121–44–8	Triethylamine
U409	23564–05–8	Carbamic acid, [1,2-phenylenebis (iminocarbonothioyl)]bis-, dimethyl ester
U409	23564–05–8	Thiophanate-methyl
U410	59669–26–0	Ethanimidothioic acid, N,N'-[thiobis [(methylimino)carbonyloxy]]bis-, dimethyl ester
U410	59669–26–0	Thiodicarb
U411	114–26–1	Phenol, 2-(1-methylethoxy)-, methylcarbamate
U411	114–26–1	Propoxur
See F027	93–76–5	Acetic acid, (2,4,5-trichlorophenoxy)-
See F027	87–86–5	Pentachlorophenol
See F027	87–86–5	Phenol, pentachloro-
See F027	58–90–2	Phenol, 2,3,4,6-tetrachloro-
See F027	95–95–4	Phenol, 2,4,5-trichloro-
See F027	88–06–2	Phenol, 2,4,6-trichloro-
See F027	93–72–1	Propanoic acid, 2-(2,4,5-trichlorophenoxy)-
See F027	93–72–1	Silvex (2,4,5-TP)
See F027	93–76–5	2,4,5-T
See F027	58–90–2	2,3,4,6-Tetrachlorophenol
See F027	95–95–4	2,4,5-Trichlorophenol
See F027	88–06–2	2,4,6-Trichlorophenol

[1]CAS Number given for parent compound only.

[45 FR 78529, 78541, Nov. 25, 1980]

Editorial Note: ForFederal Registercitations affecting §261.33, see the List of CFR Sections Affected, which appears in the Finding Aids section of the printed volume and on GPO Access.

§ 261.35 Deletion of certain hazardous waste codes following equipment cleaning and replacement.

top

(a) Wastes from wood preserving processes at plants that do not resume or initiate use of chlorophenolic preservatives will not meet the listing definition of F032 once the generator has met all of

the requirements of paragraphs (b) and (c) of this section. These wastes may, however, continue to meet another hazardous waste listing description or may exhibit one or more of the hazardous waste characteristics.

(b) Generators must either clean or replace all process equipment that may have come into contact with chlorophenolic formulations or constituents thereof, including, but not limited to, treatment cylinders, sumps, tanks, piping systems, drip pads, fork lifts, and trams, in a manner that minimizes or eliminates the escape of hazardous waste or constituents, leachate, contaminated drippage, or hazardous waste decomposition products to the ground water, surface water, or atmosphere.

(1) Generators shall do one of the following:

(i) Prepare and follow an equipment cleaning plan and clean equipment in accordance with this section;

(ii) Prepare and follow an equipment replacement plan and replace equipment in accordance with this section; or

(iii) Document cleaning and replacement in accordance with this section, carried out after termination of use of chlorophenolic preservations.

(2) Cleaning Requirements.

(i) Prepare and sign a written equipment cleaning plan that describes:

(A) The equipment to be cleaned;

(B) How the equipment will be cleaned;

(C) The solvent to be used in cleaning;

(D) How solvent rinses will be tested; and

(E) How cleaning residues will be disposed.

(ii) Equipment must be cleaned as follows:

(A) Remove all visible residues from process equipment;

(B) Rinse process equipment with an appropriate solvent until dioxins and dibenzofurans are not detected in the final solvent rinse.

(iii) Analytical requirements.

(A) Rinses must be tested by using an appropriate method.

(B) "Not detected" means at or below the following lower method calibration limits (MCLs): The 2,3,7,8-TCDD-based MCL—0.01 parts per trillion (ppt), sample weight of 1000 g, IS spiking level of 1 ppt, final extraction volume of 10–50 µL. For other congeners—multiply the values by 1 for TCDF/PeCDD/PeCDF, by 2.5 for HxCDD/HxCDF/HpCDD/HpCDF, and by 5 for OCDD/OCDF.

(iv) The generator must manage all residues from the cleaning process as F032 waste.

(3) Replacement requirements.

(i) Prepare and sign a written equipment replacement plan that describes:

(A) The equipment to be replaced;

(B) How the equipment will be replaced; and

(C) How the equipment will be disposed.

(ii) The generator must manage the discarded equipment as F032 waste.

(4) Documentation requirements.

(i) Document that previous equipment cleaning and/or replacement was performed in accordance with this section and occurred after cessation of use of chlorophenolic preservatives.

(c) The generator must maintain the following records documenting the cleaning and replacement as part of the facility's operating record:

(1) The name and address of the facility;

(2) Formulations previously used and the date on which their use ceased in each process at the plant;

(3) Formulations currently used in each process at the plant;

(4) The equipment cleaning or replacement plan;

(5) The name and address of any persons who conducted the cleaning and replacement;

(6) The dates on which cleaning and replacement were accomplished;

(7) The dates of sampling and testing;

(8) A description of the sample handling and preparation techniques, including techniques used for extraction, containerization, preservation, and chain-of-custody of the samples;

(9) A description of the tests performed, the date the tests were performed, and the results of the tests;

(10) The name and model numbers of the instrument(s) used in performing the tests;

(11) QA/QC documentation; and

(12) The following statement signed by the generator or his authorized representative:

I certify under penalty of law that all process equipment required to be cleaned or replaced under 40 CFR 261.35 was cleaned or replaced as represented in the equipment cleaning and replacement plan and accompanying documentation. I am aware that there are significant penalties for providing false information, including the possibility of fine or imprisonment.

[55 FR 50482, Dec. 6, 1990, as amended at 56 FR 30195, July 1, 1991; 70 FR 34561, June 14, 2005]

Subpart E—Exclusions/Exemptions

top

Source: 71 FR 42948, July 28, 2006, unless otherwise noted.

§ 261.38 Comparable/Syngas Fuel Exclusion.

top

Wastes that meet the following comparable/syngas fuel requirements are not solid wastes:

(a) *Comparable fuel specifications.* —(1) *Physical specifications.* —(i) *Heating value.* The heating value must exceed 5,000 BTU/lbs. (11,500 J/g).

(ii) *Viscosity.* The viscosity must not exceed: 50 cs, as-fired.

(2) *Constituent specifications.* For compounds listed in table 1 to this section the specification levels and, where non-detect is the specification, minimum required detection limits are: (see Table 1).

(b) *Synthesis gas fuel specification.* —Synthesis gas fuel (i.e., syngas fuel) that is generated from hazardous waste must:

(1) Have a minimum Btu value of 100 Btu/Scf;

(2) Contain less than 1 ppmv of total halogen;

(3) Contain less than 300 ppmv of total nitrogen other than diatomic nitrogen (N_2);

(4) Contain less than 200 ppmv of hydrogen sulfide; and

(5) Contain less than 1 ppmv of each hazardous constituent in the target list of appendix VIII constituents of this part.

Table 1 to §261.38—Detection and Detection Limit Values for Comparable Fuel Specification

Chemical name	CAS No.	Composite value (mg/kg)	Heating value (BTU/lb)	Concentration limit (mg/kg at 10,000 BTU/lb)	Minimur requirec detectio limit (mg/kg)
Total Nitrogen as N	NA	9000	18400	4900	
Total Halogens as Cl	NA	1000	18400	540	
Total Organic Halogens as Cl	NA			([1])	
Polychlorinated biphenyls, total [Arocolors, total]	1336–36–3	ND		ND	1.
Cyanide, total	57–12–5	ND		ND	1.
Metals:					
Antimony, total	7440–36–0	ND		12	
Arsenic, total	7440–38–2	ND		0.23	
Barium, total	7440–39–3	ND		23	
Beryllium, total	7440–41–7	ND		1.2	

Cadmium, total	7440–43–9		ND		1.
Chromium, total	7440–47–3	ND		2.3	
Cobalt	7440–48–4	ND		4.6	
Lead, total	7439–92–1	57	18100	31	
Manganese	7439–96–5	ND		1.2	
Mercury, total	7439–97–6	ND		0.25	
Nickel, total	7440–02–0	106	18400	58	
Selenium, total	7782–49–2	ND		0.23	
Silver, total	7440–22–4	ND		2.3	
Thallium, total	7440–28–0	ND		23	
Hydrocarbons:					
Benzo[a]anthracene	56–55–3	ND		2400	
Benzene	71–43–2	8000	19600	4100	
Benzo[b]fluoranthene	205–99–2	ND		2400	
Benzo[k]fluoranthene	207–08–9	ND		2400	
Benzo[a]pyrene	50–32–8	ND		2400	
Chrysene	218–01–9	ND		2400	
Dibenzo[a,h]anthracene	53–70–3	ND		2400	
7,12-Dimethylbenz[a] anthracene	57–97–6	ND		2400	
Fluoranthene	206–44–0	ND		2400	
Indeno(1,2,3-cd)pyrene	193–39–5	ND		2400	
3-Methylcholanthrene	56–49–5	ND		2400	
Naphthalene	91–20–	6200	19400	3200	

	3				
Toluene	108–88–3	69000	19400	36000	
Oxygenates:					
Acetophenone	98–86–2	ND		2400	
Acrolein	107–02–8	ND		39	
Allyl alcohol	107–18–6	ND		30	
Bis(2-ethylhexyl)phthalate [Di-2-ethylhexyl phthalate]	117–81–7	ND		2400	
Butyl benzyl phthalate	85–68–7	ND		2400	
o-Cresol [2-Methyl phenol]	95–48–7	ND		2400	
m-Cresol [3-Methyl phenol]	108–39–4	ND		2400	
p-Cresol [4-Methyl phenol]	106–44–5	ND		2400	
Di-n-butyl phthalate	84–74–2	ND		2400	
Diethyl phthalate	84–66–2	ND		2400	
2,4-Dimethylphenol	105–67–9	ND		2400	
Dimethyl phthalate	131–11–3	ND		2400	
Di-n-octyl phthalate	117–84–0	ND		2400	
Endothall	145–73–3	ND		100	
Ethyl methacrylate	97–63–2	ND		39	
2-Ethoxyethanol [Ethylene glycol monoethyl ether]	110–80–5	ND		100	
Isobutyl alcohol	78–83–1	ND		39	
Isosafrole	120–58–1	ND		2400	
Methyl ethyl ketone [2-Butanone]	78–93–3	ND		39	
Methyl methacrylate	80–62–6	ND		39	

1,4-Naphthoquinone	130–15–4	ND		2400	
Phenol	108–95–2	ND		2400	
Propargyl alcohol [2-Propyn-1-ol]	107–19–7	ND		30	
Safrole	94–59–7	ND		2400	
Sulfonated Organics:					
Carbon disulfide	75–15–0	ND		ND	3
Disulfoton	298–04–4	ND		ND	240
Ethyl methanesulfonate	62–50–0	ND		ND	240
Methyl methanesulfonate	66–27–3	ND		ND	240
Phorate	298–02–2	ND		ND	240
1,3-Propane sultone	1120–71–4	ND		ND	10
Tetraethyldithiopyrophosphate [Sulfotepp]	3689–24–5	ND		ND	240
Thiophenol [Benzenethiol]	108–98–5	ND		ND	3
O,O,O-Triethyl phosphorothioate	126–68–1	ND		ND	240
Nitrogenated Organics:					
Acetonitrile [Methyl cyanide]	75–05–8	ND		ND	3
2-Acetylaminofluorene [2-AAF]	53–96–3	ND		ND	240
Acrylonitrile	107–13–1	ND		ND	3
4-Aminobiphenyl	92–67–1	ND		ND	240
4-Aminopyridine	504–24–5	ND		ND	10
Aniline	62–53–3	ND		ND	240
Benzidine	92–87–5	ND		ND	240
Dibenz[a,j]acridine	224–42–0	ND		ND	240

O,O-Diethyl O-pyrazinyl phosphorothioate [Thionazin]	297–97–2	ND		ND	240
Dimethoate	60–51–5	ND		ND	240
p-(Dimethylamino) azobenzene [4-Dime thylaminoazobenzene]	60–11–7	ND		ND	240
3,3′-Dimethylbenzidine	119–93–7	ND		ND	240
α,α-Dimethylphenethylamine	122–09–8	ND		ND	240
3,3′-Dimethoxybenzidine	119–90–4	ND		ND	10
1,3-Dinitrobenzene [m-Dinitrobenzene]	99–65–0	ND		ND	240
4,6-Dinitro-o-cresol	534–52–1	ND		ND	240
2,4-Dinitrophenol	51–28–5	ND		ND	240
2,4-Dinitrotoluene	121–14–2	ND		ND	240
2,6-Dinitrotoluene	606–20–2	ND		ND	240
Dinoseb [2-sec-Butyl-4,6-dinitrophenol]	88–85–7	ND		ND	240
Diphenylamine	122–39–4	ND		ND	240
Ethyl carbamate [Urethane]	51–79–6	ND		ND	10
Ethylenethiourea (2-Imidazolidinethione)	96–45–7	ND		ND	11
Famphur	52–85–7	ND		ND	240
Methacrylonitrile	126–98–7	ND		ND	3
Methapyrilene	91–80–5	ND		ND	240
Methomyl	16752–77–5	ND		ND	5
2-Methyllactonitrile, [Acetone cyanohydrin]	75–86–5	ND		ND	10
Methyl parathion	298–00–0	ND		ND	240
MNNG (N-Metyl-N-nitroso-N′-nitroguanidine)	70–25–7	ND		ND	11

1-Naphthylamine, [α-Naphthylamine]	134–32–7	ND		ND	240
2-Naphthylamine, [β-Naphthylamine]	91–59–8	ND		ND	240
Nicotine	54–11–5	ND		ND	10
4-Nitroaniline, [p-Nitroaniline]	100–01–6	ND		ND	240
Nitrobenzene	98–95–3	ND		ND	240
p-Nitrophenol, [p-Nitrophenol]	100–02–7	ND		ND	240
5-Nitro-o-toluidine	99–55–8	ND		ND	240
N-Nitrosodi-n-butylamine	924–16–3	ND		ND	240
N-Nitrosodiethylamine	55–18–5	ND		ND	240
N-Nitrosodiphenylamine, [Diphenylnitrosamine]	86–30–6	ND		ND	240
N-Nitroso-N-methylethylamine	10595–95–6	ND		ND	240
N-Nitrosomorpholine	59–89–2	ND		ND	240
N-Nitrosopiperidine	100–75–4	ND		ND	240
N-Nitrosopyrrolidine	930–55–2	ND		ND	240
2-Nitropropane	79–46–9	ND		ND	3
Parathion	56–38–2	ND		ND	240
Phenacetin	62–44–2	ND		ND	240
1,4-Phenylene diamine, [p-Phenylenediamine]	106–50–3	ND		ND	240
N-Phenylthiourea	103–85–5	ND		ND	5
2-Picoline [alpha-Picoline]	109–06–8	ND		ND	240
Propylthioracil, [6-Propyl-2-thiouracil]	51–52–5	ND		ND	10
Pyridine	110–86–1	ND		ND	240

Strychnine	57–24–9	ND		ND	10
Thioacetamide	62–55–5	ND		ND	5
Thiofanox	39196–18–4	ND		ND	10
Thiourea	62–56–6	ND		ND	5
Toluene-2,4-diamine [2,4-Diaminotoluene]	95–80–7	ND		ND	5
Toluene-2,6-diamine [2,6-Diaminotoluene]	823–40–5	ND		ND	5
o-Toluidine	95–53–4	ND		ND	240
p-Toluidine	106–49–0	ND		ND	10
1,3,5-Trinitrobenzene, [sym-Trinitobenzene]	99–35–4	ND		ND	240
Halogenated Organics:					
Allyl chloride	107–05–1	ND		ND	3
Aramite	140–57–8	ND		ND	240
Benzal chloride [Dichloromethyl benzene]	98–87–3	ND		ND	10
Benzyl chloride	100–44–77	ND		ND	10
bis(2-Chloroethyl)ether [Dichoroethyl ether]	111–44–4	ND		ND	240
Bromoform [Tribromomethane]	75–25–2	ND		ND	3
Bromomethane [Methyl bromide]	74–83–9	ND		ND	3
4-Bromophenyl phenyl ether [p-Bromo diphenyl ether]	101–55–3	ND		ND	240
Carbon tetrachloride	56–23–5	ND		ND	3
Chlordane	57–74–9	ND		ND	1
p-Chloroaniline	106–47–8	ND		ND	240
Chlorobenzene	108–90–7	ND		ND	3
Chlorobenzilate	510–	ND		ND	240

	15–6				
p-Chloro-m-cresol	59–50–7	ND		ND	240
2-Chloroethyl vinyl ether	110–75–8	ND		ND	3
Chloroform	67–66–3	ND		ND	3
Chloromethane [Methyl chloride]	74–87–3	ND		ND	3
2-Chloronaphthalene [beta-Chloronaphthalene]	91–58–7	ND		ND	240
2-Chlorophenol [o-Chlorophenol]	95–57–8	ND		ND	240
Chloroprene [2-Chloro-1,3-butadiene]	1126–99–8	ND		ND	3
2,4-D [2,4-Dichlorophenoxyacetic acid]	94–75–7	ND		ND	7.
Diallate	2303–16–4	ND		ND	240
1,2-Dibromo-3-chloropropane	96–12–8	ND		ND	3
1,2-Dichlorobenzene [o-Dichlorobenzene]	95–50–1	ND		ND	240
1,3-Dichlorobenzene [m-Dichlorobenzene]	541–73–1	ND		ND	240
1,4-Dichlorobenzene [p-Dichlorobenzene]	106–46–7	ND		ND	240
3,3′-Dichlorobenzidine	91–94–1	ND		ND	240
Dichlorodifluoromethane [CFC–12]	75–71–8	ND		ND	3
1,2-Dichloroethane [Ethylene dichloride]	107–06–2	ND		ND	3
1,1-Dichloroethylene [Vinylidene chloride]	75–35–4	ND		ND	3
Dichloromethoxy ethane [Bis (2-chloroethoxy)methane]	111–91–1	ND		ND	240
2,4-Dichlorophenol	120–83–2	ND		ND	240
2,6-Dichlorophenol	87–65–0	ND		ND	240
1,2-Dichloropropane [Propylene dichloride]	78–87–5	ND		ND	3
cis-1,3-Dichloropropylene	10061–	ND		ND	3

	01–5				
trans-1,3-Dichloropropylene	10061–02–6	ND		ND	3
1,3-Dichloro-2-propanol	96–23–1	ND		ND	3
Endosulfan I	959–98–8	ND		ND	1.
Endosulfan II	33213–65–9	ND		ND	1.
Endrin	72–20–8	ND		ND	1.
Endrin aldehyde	7421–93–4	ND		ND	1.
Endrin Ketone	53494–70–5	ND		ND	1.
Epichlorohydrin [1-Chloro-2,3-epoxy propane]	106–89–8	ND		ND	3
Ethylidene dichloride [1,1-Dichloroethane]	75–34–3	ND		ND	3
2-Fluoroacetamide	640–19–7	ND		ND	10
Heptachlor	76–44–8	ND		ND	1.
Heptachlor epoxide	1024–57–3	ND		ND	2.
Hexachlorobenzene	118–74–1	ND		ND	240
Hexachloro-1,3-butadiene [Hexachlorobutadiene]	87–68–3	ND		ND	240
Hexachlorocyclopentadiene	77–47–4	ND		ND	240
Hexachloroethane	67–72–1	ND		ND	240
Hexachlorophene	70–30–4	ND		ND	5900
Hexachloropropene [Hexachloropropylene]	1888–71–7	ND		ND	240
Isodrin	465–73–6	ND		ND	240
Kepone [Chlordecone]	143–50–0	ND		ND	470
Lindane [gamma-BHC] [gamma-Hexachlorocyclohexane]	58–89–9	ND		ND	1.

Methylene chloride [Dichloromethane]	75–09–2	ND		ND	3
4,4'-Methylene-bis(2-chloroaniline)	101–14–4	ND		ND	10
Methyl iodide [Iodomethane]	74–88–4	ND		ND	3
Pentachlorobenzene	608–93–5	ND		ND	240
Pentachloroethane	76–01–7	ND		ND	3
Pentachloronitrobenzene [PCNB] [Quintobenzene] [Quintozene]	82–68–8	ND		ND	240
Pentachlorophenol	87–86–5	ND		ND	240
Pronamide	23950–58–5	ND		ND	240
Silvex [2,4,5-Trichlorophenoxypropionic acid]	93–72–1	ND		ND	7.
2,3,7,8-Tetrachlorodibenzo-p-dioxin [2,3,7,8-TCDD]	1746–01–6	ND		ND	3
1,2,4,5-Tetrachlorobenzene	95–94–3	ND		ND	240
1,1,2,2-Tetrachloroethane	79–34–5	ND		ND	3
Tetrachloroethylene [Perchloroethylene]	127–18–4	ND		ND	3
2,3,4,6-Tetrachlorophenol	58–90–2	ND		ND	240
1,2,4-Trichlorobenzene	120–82–1	ND		ND	240
1,1,1-Trichloroethane [Methyl chloroform]	71–55–6	ND		ND	3
1,1,2-Trichloroethane [Vinyl trichloride]	79–00–5	ND		ND	3
Trichloroethylene	79–01–6	ND		ND	3
Trichlorofluoromethane [Trichlormonofluoromethane]	75–69–4	ND		ND	3
2,4,5-Trichlorophenol	95–95–4	ND		ND	240
2,4,6-Trichlorophenol	88–06–2	ND		ND	240
1,2,3-Trichloropropane	96–18–	ND		ND	3

	4				
Vinyl Chloride	75–01–4	ND		ND	3

Notes:

NA—Not Applicable.

ND—Nondetect.

[1]25 or individual halogenated organics listed below.

(c) *Implementation.* Waste that meets the comparable or syngas fuel specifications provided by paragraphs (a) or (b) of this section (these constituent levels must be achieved by the comparable fuel when generated, or as a result of treatment or blending, as provided in paragraphs (c)(3) or (4) of this section) is excluded from the definition of solid waste provided that the following requirements are met:

(1) *Notices.* For purposes of this section, the person claiming and qualifying for the exclusion is called the comparable/syngas fuel generator and the person burning the comparable/syngas fuel is called the comparable/syngas burner. The person who generates the comparable fuel or syngas fuel must claim and certify to the exclusion.

(i) State RCRA and CAA Directors in Authorized States or Regional RCRA and CAA Directors in Unauthorized States.—

(A) The generator must submit a one-time notice to the Regional or State RCRA and CAA Directors, in whose jurisdiction the exclusion is being claimed and where the comparable/syngas fuel will be burned, certifying compliance with the conditions of the exclusion and providing documentation as required by paragraph (c)(1)(i)(C) of this section;

(B) If the generator is a company that generates comparable/syngas fuel at more than one facility, the generator shall specify at which sites the comparable/syngas fuel will be generated;

(C) A comparable/syngas fuel generator's notification to the Directors must contain the following items:

(*1*) The name, address, and RCRA ID number of the person/facility claiming the exclusion;

(*2*) The applicable EPA Hazardous Waste Codes for the hazardous waste;

(*3*) Name and address of the units, meeting the requirements of paragraph (c)(2) of this section, that will burn the comparable/syngas fuel; and

(*4*) The following statement is signed and submitted by the person claiming the exclusion or his authorized representative:

Under penalty of criminal and civil prosecution for making or submitting false statements, representations, or omissions, I certify that the requirements of 40 CFR 261.38 have been met for all waste identified in this notification. Copies of the records and information required at 40 CFR 261.38(c)(10) are available at the comparable/syngas fuel generator's facility. Based on my inquiry of the individuals immediately responsible for obtaining the information, the information is, to the best of my knowledge and belief, true, accurate, and complete. I am aware that there are significant penalties for submitting false information, including the possibility of fine and imprisonment for knowing violations.

(ii) *Public notice.* Prior to burning an excluded comparable/syngas fuel, the burner must publish in a major newspaper of general circulation local to the site where the fuel will be burned, a notice entitled "Notification of Burning a Comparable/Syngas Fuel Excluded Under the Resource Conservation and

Recovery Act" containing the following information:

(A) Name, address, and RCRA ID number of the generating facility;

(B) Name and address of the unit(s) that will burn the comparable/syngas fuel;

(C) A brief, general description of the manufacturing, treatment, or other process generating the comparable/syngas fuel;

(D) An estimate of the average and maximum monthly and annual quantity of the waste claimed to be excluded; and

(E) Name and mailing address of the Regional or State Directors to whom the claim was submitted.

(2) *Burning.* The comparable/syngas fuel exclusion for fuels meeting the requirements of paragraphs (a) or (b) and (c)(1) of this section applies only if the fuel is burned in the following units that also shall be subject to Federal/State/local air emission requirements, including all applicable CAA MACT requirements:

(i) Industrial furnaces as defined in §260.10 of this chapter;

(ii) Boilers, as defined in §260.10 of this chapter, that are further defined as follows:

(A) Industrial boilers located on the site of a facility engaged in a manufacturing process where substances are transformed into new products, including the component parts of products, by mechanical or chemical processes; or

(B) Utility boilers used to produce electric power, steam, heated or cooled air, or other gases or fluids for sale;

(iii) Hazardous waste incinerators subject to regulation under subpart O of parts 264 or 265 of this chapter or applicable CAA MACT standards.

(iv) Gas turbines used to produce electric power, steam, heated or cooled air, or other gases or fluids for sale.

(3) *Blending to meet the viscosity specification.* A hazardous waste blended to meet the viscosity specification shall:

(i) As generated and prior to any blending, manipulation, or processing meet the constituent and heating value specifications of paragraphs (a)(1)(i) and (a)(2) of this section;

(ii) Be blended at a facility that is subject to the applicable requirements of parts 264 and 265, or §262.34 of this chapter; and

(iii) Not violate the dilution prohibition of paragraph (c)(6) of this chapter.

(4) *Treatment to meet the comparable fuel exclusion specifications.* (i) A hazardous waste may be treated to meet the exclusion specifications of paragraphs (a)(1) and (2) of this section provided the treatment:

(A) Destroys or removes the constituent listed in the specification or raises the heating value by removing or destroying hazardous constituents or materials;

(B) Is performed at a facility that is subject to the applicable requirements of parts 264 and 265, or §262.34 of this Chapter; and

(C) Does not violate the dilution prohibition of paragraph (c)(6) of this seciton.

(ii) Residuals resulting from the treatment of a hazardous waste listed in subpart D of this part to generate a comparable fuel remain a hazardous waste.

(5) *Generation of a syngas fuel.* (i) A syngas fuel can be generated from the processing of hazardous wastes to meet the exclusion specifications of paragraph (b) of this section provided the processing:

(A) Destroys or removes the constituent listed in the specification or raises the heating value by removing or destroying constituents or materials;

(B) Is performed at a facility that is subject to the applicable requirements of parts 264 and 265, or §262.34 of this chapter or is an exempt recycling unit pursuant to §261.6(c) of this chapter; and

(C) Does not violate the dilution prohibition of paragraph (c)(6) of this chapter.

(ii) Residuals resulting from the treatment of a hazardous waste listed in subpart D of this part to generate a syngas fuel remain a hazardous waste.

(6) *Dilution prohibition for comparable and syngas fuels.* No generator, transporter, handler, or owner or operator of a treatment, storage, or disposal facility shall in any way dilute a hazardous waste to meet the exclusion specifications of paragraph (a)(1)(i), (a)(2) or (b) of this section.

(7) *Waste analysis plans.* The generator of a comparable/syngas fuel shall develop and follow a written waste analysis plan which describes the procedures for sampling and analysis of the hazardous waste to be excluded. The plan shall be followed and retained at the facility excluding the waste.

(i) At a minimum, the plan must specify:

(A) The parameters for which each hazardous waste will be analyzed and the rationale for the selection of those parameters;

(B) The test methods which will be used to test for these parameters;

(C) The sampling method which will be used to obtain a representative sample of the waste to be analyzed;

(D) The frequency with which the initial analysis of the waste will be reviewed or repeated to ensure that the analysis is accurate and up to date; and

(E) If process knowledge is used in the waste determination, any information prepared by the generator in making such determination.

(ii) The waste analysis plan shall also contain records of the following:

(A) The dates and times waste samples were obtained, and the dates the samples were analyzed;

(B) The names and qualifications of the person(s) who obtained the samples;

(C) A description of the temporal and spatial locations of the samples;

(D) The name and address of the laboratory facility at which analyses of the samples were performed;

(E) A description of the analytical methods used, including any clean-up and sample preparation methods;

(F) All quantitation limits achieved and all other quality control results for the analysis (including method blanks, duplicate analyses, matrix spikes, etc.), laboratory quality assurance data, and description of any deviations from analytical methods written in the plan or from any other activity written in the plan which occurred;

(G) All laboratory results demonstrating that the exclusion specifications have been met for the waste; and

(H) All laboratory documentation that support the analytical results, unless a contract between the claimant and the laboratory provides for the documentation to be maintained by the laboratory for the period specified in paragraph (c)(11) of this section and also provides for the availability of the documentation to the claimant upon request.

(iii) Syngas fuel generators shall submit for approval, prior to performing sampling, analysis, or any management of a syngas fuel as an excluded waste, a waste analysis plan containing the elements of paragraph (c)(7)(i) of this section to the appropriate regulatory authority. The approval of waste analysis plans must be stated in writing and received by the facility prior to sampling and analysis to demonstrate the exclusion of a syngas. The approval of the waste analysis plan may contain such provisions and conditions as the regulatory authority deems appropriate.

(8) *Comparable fuel sampling and analysis.* (i) General. For each waste for which an exclusion is claimed, the generator of the hazardous waste must test for all the constituents on appendix VIII to this part, except those that the generator determines, based on testing or knowledge, should not be present in the waste. The generator is required to document the basis of each determination that a constituent should not be present. The generator may not determine that any of the following categories of constituents should not be present:

(A) A constituent that triggered the toxicity characteristic for the waste constituents that were the basis of the listing of the waste stream, or constituents for which there is a treatment standard for the waste code in 40 CFR 268.40;

(B) A constituent detected in previous analysis of the waste;

(C) Constituents introduced into the process that generates the waste; or

(D) Constituents that are byproducts or side reactions to the process that generates the waste.

Note to paragraph(c)(8): Any claim under this section must be valid and accurate for all hazardous constituents; a determination not to test for a hazardous constituent will not shield a generator from liability should that constituent later be found in the waste above the exclusion specifications.

(ii) For each waste for which the exclusion is claimed where the generator of the comparable/syngas fuel is not the original generator of the hazardous waste, the generator of the comparable/syngas fuel may not use process knowledge pursuant to paragraph (c)(8)(i) of this section and must test to determine that all of the constituent specifications of paragraphs (a)(2) and (b) of this section have been met.

(iii) The comparable/syngas fuel generator may use any reliable analytical method to demonstrate that no constituent of concern is present at concentrations above the specification levels. It is the responsibility of the generator to ensure that the sampling and analysis are unbiased, precise, and representative of the waste. For the waste to be eligible for exclusion, a generator must demonstrate that:

(A) Each constituent of concern is not present in the waste above the specification level at the 95% upper confidence limit around the mean; and

(B) The analysis could have detected the presence of the constituent at or below the specification level at the 95% upper confidence limit around the mean.

(iv) Nothing in this paragraph preempts, overrides or otherwise negates the provision in §262.11 of this chapter, which requires any person who generates a solid waste to determine if that waste is a hazardous waste.

(v) In an enforcement action, the burden of proof to establish conformance with the exclusion specification shall be on the generator claiming the exclusion.

(vi) The generator must conduct sampling and analysis in accordance with their waste analysis plan developed under paragraph (c)(7) of this section.

(vii) Syngas fuel and comparable fuel that has not been blended in order to meet the kinematic viscosity specifications shall be analyzed as generated.

(viii) If a comparable fuel is blended in order to meet the kinematic viscosity specifications, the generator shall:

(A) Analyze the fuel as generated to ensure that it meets the constituent and heating value specifications; and

(B) After blending, analyze the fuel again to ensure that the blended fuel continues to meet all comparable/syngas fuel specifications.

(ix) Excluded comparable/syngas fuel must be re-tested, at a minimum, annually and must be retested after a process change that could change the chemical or physical properties of the waste.

(9) *Speculative accumulation.* Any persons handling a comparable/syngas fuel are subject to the speculative accumulation test under §261.2(c)(4) of this chapter.

(10) *Records.* The generator must maintain records of the following information on-site:

(i) All information required to be submitted to the implementing authority as part of the notification of the claim:

(A) The owner/operator name, address, and RCRA facility ID number of the person claiming the exclusion;

(B) The applicable EPA Hazardous Waste Codes for each hazardous waste excluded as a fuel; and

(C) The certification signed by the person claiming the exclusion or his authorized representative.

(ii) A brief description of the process that generated the hazardous waste and process that generated the excluded fuel, if not the same;

(iii) An estimate of the average and maximum monthly and annual quantities of each waste claimed to be excluded;

(iv) Documentation for any claim that a constituent is not present in the hazardous waste as required under paragraph (c)(8)(i) of this section;

(v) The results of all analyses and all detection limits achieved as required under paragraph (c)(8) of this section;

(vi) If the excluded waste was generated through treatment or blending, documentation as required under paragraph (c)(3) or (4) of this section;

(vii) If the waste is to be shipped off-site, a certification from the burner as required under paragraph (c)(12) of this section;

(viii) A waste analysis plan and the results of the sampling and analysis that includes the following:

(A) The dates and times waste samples were obtained, and the dates the samples were analyzed;

(B) The names and qualifications of the person(s) who obtained the samples;

(C) A description of the temporal and spatial locations of the samples;

(D) The name and address of the laboratory facility at which analyses of the samples were performed;

(E) A description of the analytical methods used, including any clean-up and sample preparation methods;

(F) All quantitation limits achieved and all other quality control results for the analysis (including method blanks, duplicate analyses, matrix spikes, etc.), laboratory quality assurance data, and description of any deviations from analytical methods written in the plan or from any other activity written in the plan which occurred;

(G) All laboratory analytical results demonstrating that the exclusion specifications have been met for the waste; and

(H) All laboratory documentation that support the analytical results, unless a contract between the claimant and the laboratory provides for the documentation to be maintained by the laboratory for the period specified in paragraph (c)(11) of this section and also provides for the availability of the documentation to the claimant upon request; and

(ix) If the generator ships comparable/syngas fuel off-site for burning, the generator must retain for each shipment the following information on-site:

(A) The name and address of the facility receiving the comparable/syngas fuel for burning;

(B) The quantity of comparable/syngas fuel shipped and delivered;

(C) The date of shipment or delivery;

(D) A cross-reference to the record of comparable/syngas fuel analysis or other information used to make the determination that the comparable/syngas fuel meets the specifications as required under paragraph (c)(8) of this section; and

(E) A one-time certification by the burner as required under paragraph (c)(12) of this section.

(11) *Records retention.* Records must be maintained for the period of three years. A generator must maintain a current waste analysis plan during that three year period.

(12) *Burner certification.* Prior to submitting a notification to the State and Regional Directors, a comparable/syngas fuel generator who intends to ship their fuel off-site for burning must obtain a one-time written, signed statement from the burner:

(i) Certifying that the comparable/syngas fuel will only be burned in an industrial furnace or boiler, utility boiler, or hazardous waste incinerator, as required under paragraph (c)(2) of this section;

(ii) Identifying the name and address of the units that will burn the comparable/syngas fuel; and

(iii) Certifying that the state in which the burner is located is authorized to exclude wastes as comparable/syngas fuel under the provisions of this section.

(13) *Ineligible waste codes.* Wastes that are listed because of presence of dioxins or furans, as set out in Appendix VII of this part, are not eligible for this exclusion, and any fuel produced from or otherwise containing these wastes remains a hazardous waste subject to full RCRA hazardous waste management requirements.

[63 FR 33823, June 19, 1998, as amended at 64 FR 53070, Sept. 30, 1999; 64 FR 63213, Nov. 19, 1999; 65 FR 42302, July 10, 2000; 70 FR 34562, June 14, 2005; 71 FR 40270, July 14, 2006; Redesignated at 71 FR 42949, July 28, 2006]

§ 261.39 Conditional Exclusion for Used, Broken Cathode Ray Tubes (CRTs) and Processed CRT Glass Undergoing Recycling.

top

Used, broken CRTs are not solid wastes if they meet the following conditions:

(a) *Prior to processing:* These materials are not solid wastes if they are destined for recycling and if they meet the following requirements:

(1) *Storage.* The broken CRTs must be either:

(i) Stored in a building with a roof, floor, and walls, or

(ii) Placed in a container (*i.e.* , a package or a vehicle) that is constructed, filled, and closed to minimize releases to the environment of CRT glass (including fine solid materials).

(2) *Labeling.* Each container in which the used, broken CRT is contained must be labeled or marked clearly with one of the following phrases: "Used cathode ray tube(s)-contains leaded glass " or "Leaded glass from televisions or computers." It must also be labeled: "Do not mix with other glass materials."

(3) *Transportation.* The used, broken CRTs must be transported in a container meeting the requirements of paragraphs (a)(1)(ii) and (2) of this section.

(4) *Speculative accumulation and use constituting disposal.* The used, broken CRTs are subject to the limitations on speculative accumulation as defined in paragraph (c)(8) of this section. If they are used in a manner constituting disposal, they must comply with the applicable requirements of part 266, subpart C instead of the requirements of this section.

(5) *Exports.* In addition to the applicable conditions specified in paragraphs (a)(1)–(4) of this section, exporters of used, broken CRTs must comply with the following requirements:

(i) Notify EPA of an intended export before the CRTs are scheduled to leave the United States. A complete notification should be submitted sixty (60) days before the initial shipment is intended to be shipped off-site. This notification may cover export activities extending over a twelve (12) month or lesser period. The notification must be in writing, signed by the exporter, and include the following information:

(A) Name, mailing address, telephone number and EPA ID number (if applicable) of the exporter of the CRTs.

(B) The estimated frequency or rate at which the CRTs are to be exported and the period of time over which they are to be exported.

(C) The estimated total quantity of CRTs specified in kilograms.

(D) All points of entry to and departure from each foreign country through which the CRTs will pass.

(E) A description of the means by which each shipment of the CRTs will be transported (*e.g.* , mode of transportation vehicle (air, highway, rail, water, etc.), type(s) of container (drums, boxes, tanks, etc.)).

(F) The name and address of the recycler and any alternate recycler.

(G) A description of the manner in which the CRTs will be recycled in the foreign country that will be receiving the CRTs.

(H) The name of any transit country through which the CRTs will be sent and a description of the approximate length of time the CRTs will remain in such country and the nature of their handling while there.

(ii) Notifications submitted by mail should be sent to the following mailing address: Office of Enforcement

and Compliance Assurance, Office of Federal Activities, International Compliance Assurance Division, (Mail Code 2254A), Environmental Protection Agency, 1200 Pennsylvania Ave., NW., Washington, DC 20460. Hand-delivered notifications should be sent to: Office of Enforcement and Compliance Assurance, Office of Federal Activities, International Compliance Assurance Division, (Mail Code 2254A), Environmental Protection Agency, Ariel Rios Bldg., Room 6144, 1200 Pennsylvania Ave., NW., Washington, DC. In both cases, the following shall be prominently displayed on the front of the envelope: "Attention: Notification of Intent to Export CRTs."

(iii) Upon request by EPA, the exporter shall furnish to EPA any additional information which a receiving country requests in order to respond to a notification.

(iv) EPA will provide a complete notification to the receiving country and any transit countries. A notification is complete when EPA receives a notification which EPA determines satisfies the requirements of paragraph (a)(5)(i) of this section. Where a claim of confidentiality is asserted with respect to any notification information required by paragraph (a)(5)(i) of this section, EPA may find the notification not complete until any such claim is resolved in accordance with 40 CFR 260.2.

(v) The export of CRTs is prohibited unless the receiving country consents to the intended export. When the receiving country consents in writing to the receipt of the CRTs, EPA will forward an Acknowledgment of Consent to Export CRTs to the exporter. Where the receiving country objects to receipt of the CRTs or withdraws a prior consent, EPA will notify the exporter in writing. EPA will also notify the exporter of any responses from transit countries.

(vi) When the conditions specified on the original notification change, the exporter must provide EPA with a written renotification of the change, except for changes to the telephone number in paragraph (a)(5)(i)(A) of this section and decreases in the quantity indicated pursuant to paragraph (a)(5)(i)(C) of this section. The shipment cannot take place until consent of the receiving country to the changes has been obtained (except for changes to information about points of entry and departure and transit countries pursuant to paragraphs (a)(5)(i)(D) and (a)(5)(i)(H) of this section) and the exporter of CRTs receives from EPA a copy of the Acknowledgment of Consent to Export CRTs reflecting the receiving country's consent to the changes.

(vii) A copy of the Acknowledgment of Consent to Export CRTs must accompany the shipment of CRTs. The shipment must conform to the terms of the Acknowledgment.

(viii) If a shipment of CRTs cannot be delivered for any reason to the recycler or the alternate recycler, the exporter of CRTs must renotify EPA of a change in the conditions of the original notification to allow shipment to a new recycler in accordance with paragraph (a)(5)(vi) of this section and obtain another Acknowledgment of Consent to Export CRTs.

(ix) Exporters must keep copies of notifications and Acknowledgments of Consent to Export CRTs for a period of three years following receipt of the Acknowledgment.

(b) *Requirements for used CRT processing:* Used, broken CRTs undergoing CRT processing as defined in §260.10 of this chapter are not solid wastes if they meet the following requirements:

(1) *Storage.* Used, broken CRTs undergoing processing are subject to the requirement of paragraph (a)(4) of this section.

(2) *Processing.*

(i) All activities specified in paragraphs (2) and (3) of the definition of "CRT processing" in §260.10 of this chapter must be performed within a building with a roof, floor, and walls; and

(ii) No activities may be performed that use temperatures high enough to volatilize lead from CRTs.

(c) *Processed CRT glass sent to CRT glass making or lead smelting:* Glass from used CRTs that is destined for recycling at a CRT glass manufacturer or a lead smelter after processing is not a solid waste unless it is speculatively accumulated as defined in §261.1(c)(8).

(d) *Use constituting disposal:* Glass from used CRTs that is used in a manner constituting disposal must

comply with the requirements of 40 CFR part 266, subpart C instead of the requirements of this section.

§ 261.40 Conditional Exclusion for Used, Intact Cathode Ray Tubes (CRTs) Exported for Recycling.

top

Used, intact CRTs exported for recycling are not solid wastes if they meet the notice and consent conditions of §261.39(a)(5), and if they are not speculatively accumulated as defined in §261.1(c)(8).

§ 261.41 Notification and Recordkeeping for Used, Intact Cathode Ray Tubes (CRTs) Exported for Reuse.

top

(a) Persons who export used, intact CRTs for reuse must send a one-time notification to the Regional Administrator. The notification must include a statement that the notifier plans to export used, intact CRTs for reuse, the notifier's name, address, and EPA ID number (if applicable) and the name and phone number of a contact person.

(b) Persons who export used, intact CRTs for reuse must keep copies of normal business records, such as contracts, demonstrating that each shipment of exported CRTs will be reused. This documentation must be retained for a period of at least three years from the date the CRTs were exported.

Appendix I to Part 261—Representative Sampling Methods

top

The methods and equipment used for sampling waste materials will vary with the form and consistency of the waste materials to be sampled. Samples collected using the sampling protocols listed below, for sampling waste with properties similar to the indicated materials, will be considered by the Agency to be representative of the waste.

Extremely viscous liquid—ASTM Standard D140–70 Crushed or powdered material—ASTM Standard D346–75 Soil or rock-like material—ASTM Standard D420–69 Soil-like material—ASTM Standard D1452–65

Fly Ash-like material—ASTM Standard D2234–76 [ASTM Standards are available from ASTM, 1916 Race St., Philadelphia, PA 19103]

Containerized liquid waste—"COLIWASA."

Liquid waste in pits, ponds, lagoons, and similar reservoirs—"Pond Sampler."

This manual also contains additional information on application of these protocols.

[45 FR 33119, May 19, 1980, as amended at 70 FR 34562, June 14, 2005]

Appendix II to Part 261 [Reserved]

top

Appendix III to Part 261 [Reserved]

top

Appendix IV to Part 261 [Reserved for Radioactive Waste Test Methods]

top

Appendix V to Part 261 [Reserved for Infectious Waste Treatment Specifications]

top

Appendix VI to Part 261 [Reserved for Etiologic Agents]

top

Appendix VII to Part 261—Basis for Listing Hazardous Waste

top

EPA hazardous waste No.	Hazardous constituents for which listed
F001	Tetrachloroethylene, methylene chloride trichloroethylene, 1,1,1-trichloroethane, carbon tetrachloride, chlorinated fluorocarbons.
F002	Tetrachloroethylene, methylene chloride, trichloroethylene, 1,1,1-trichloroethane, 1,1,2-trichloroethane, chlorobenzene, 1,1,2-trichloro-1,2,2-trifluoroethane, ortho-dichlorobenzene, trichlorofluoromethane.
F003	N.A.
F004	Cresols and cresylic acid, nitrobenzene.
F005	Toluene, methyl ethyl ketone, carbon disulfide, isobutanol, pyridine, 2-ethoxyethanol, benzene, 2-nitropropane.
F006	Cadmium, hexavalent chromium, nickel, cyanide (complexed).
F007	Cyanide (salts).
F008	Cyanide (salts).
F009	Cyanide (salts).
F010	Cyanide (salts).
F011	Cyanide (salts).
F012	Cyanide (complexed).
F019	Hexavalent chromium, cyanide (complexed).
F020	Tetra- and pentachlorodibenzo- *p* -dioxins; tetra and pentachlorodi-benzofurans; tri- and tetrachlorophenols and their chlorophenoxy derivative acids, esters, ethers, amine and other salts.
F021	Penta- and hexachlorodibenzo- *p*- dioxins; penta- and hexachlorodibenzofurans; pentachlorophenol and its derivatives.
F022	Tetra-, penta-, and hexachlorodibenzo- *p* -dioxins; tetra-, penta-,

	and hexachlorodibenzofurans.
F023	Tetra-, and pentachlorodibenzo- *p* -dioxins; tetra- and pentachlorodibenzofurans; tri- and tetrachlorophenols and their chlorophenoxy derivative acids, esters, ethers, amine and other salts.
F024	Chloromethane, dichloromethane, trichloromethane, carbon tetrachloride, chloroethylene, 1,1-dichloroethane, 1,2-dichloroethane, trans-1-2-dichloroethylene, 1,1-dichloroethylene, 1,1,1-trichloroethane, 1,1,2-trichloroethane, trichloroethylene, 1,1,1,2-tetra-chloroethane, 1,1,2,2-tetrachloroethane, tetrachloroethylene, pentachloroethane, hexachloroethane, allyl chloride (3-chloropropene), dichloropropane, dichloropropene, 2-chloro-1,3-butadiene, hexachloro-1,3-butadiene, hexachlorocyclopentadiene, hexachlorocyclohexane, benzene, chlorbenzene, dichlorobenzenes, 1,2,4-trichlorobenzene, tetrachlorobenzene, pentachlorobenzene, hexachlorobenzene, toluene, naphthalene.
F025	Chloromethane; Dichloromethane; Trichloromethane; Carbon tetrachloride; Chloroethylene; 1,1-Dichloroethane; 1,2-Dichloroethane; trans-1,2-Dichloroethylene; 1,1-Dichloroethylene; 1,1,1-Trichloroethane; 1,1,2-Trichloroethane; Trichloroethylene; 1,1,1,2-Tetrachloroethane; 1,1,2,2-Tetrachloroethane; Tetrachloroethylene; Pentachloroethane; Hexachloroethane; Allyl chloride (3-Chloropropene); Dichloropropane; Dichloropropene; 2-Chloro-1,3-butadiene; Hexachloro-1,3-butadiene; Hexachlorocyclopentadiene; Benzene; Chlorobenzene; Dichlorobenzene; 1,2,4-Trichlorobenzene; Tetrachlorobenzene; Pentachlorobenzene; Hexachlorobenzene; Toluene; Naphthalene.
F026	Tetra-, penta-, and hexachlorodibenzo- *p* -dioxins; tetra-, penta-, and hexachlorodibenzofurans.
F027	Tetra-, penta-, and hexachlorodibenzo- *p*- dioxins; tetra-, penta-, and hexachlorodibenzofurans; tri-, tetra-, and pentachlorophenols and their chlorophenoxy derivative acids, esters, ethers, amine and other salts.
F028	Tetra-, penta-, and hexachlorodibenzo- *p*- dioxins; tetra-, penta-, and hexachlorodibenzofurans; tri-, tetra-, and pentachlorophenols and their chlorophenoxy derivative acids, esters, ethers, amine and other salts.
F032	Benz(a)anthracene, benzo(a)pyrene, dibenz(a,h)-anthracene, indeno(1,2,3-cd)pyrene, pentachlorophenol, arsenic, chromium, tetra-, penta-, hexa-, heptachlorodibenzo-p-dioxins, tetra-, penta-, hexa-, heptachlorodibenzofurans.
F034	Benz(a)anthracene, benzo(k)fluoranthene, benzo(a)pyrene, dibenz(a,h)anthracene, indeno(1,2,3-cd)pyrene, naphthalene, arsenic, chromium.
F035	Arsenic, chromium, lead.

F037	Benzene, benzo(a)pyrene, chrysene, lead, chromium.
F038	Benzene, benzo(a)pyrene, chrysene, lead, chromium.
F039	All constituents for which treatment standards are specified for multi-source leachate (wastewaters and nonwastewaters) under 40 CFR 268.43, Table CCW.
K001	Pentachlorophenol, phenol, 2-chlorophenol, p-chloro-m-cresol, 2,4-dimethylphenyl, 2,4-dinitrophenol, trichlorophenols, tetrachlorophenols, 2,4-dinitrophenol, creosote, chrysene, naphthalene, fluoranthene, benzo(b)fluoranthene, benzo(a) pyrene, indeno(1,2,3-cd)pyrene, benz(a)anthracene, dibenz(a) anthracene, acenaphthalene.
K002	Hexavalent chromium, lead
K003	Hexavalent chromium, lead.
K004	Hexavalent chromium.
K005	Hexavalent chromium, lead.
K006	Hexavalent chromium.
K007	Cyanide (complexed), hexavalent chromium.
K008	Hexavalent chromium.
K009	Chloroform, formaldehyde, methylene chloride, methyl chloride, paraldehyde, formic acid.
K010	Chloroform, formaldehyde, methylene chloride, methyl chloride, paraldehyde, formic acid, chloroacetaldehyde.
K011	Acrylonitrile, acetonitrile, hydrocyanic acid.
K013	Hydrocyanic acid, acrylonitrile, acetonitrile.
K014	Acetonitrile, acrylamide.
K015	Benzyl chloride, chlorobenzene, toluene, benzotrichloride.
K016	Hexachlorobenzene, hexachlorobutadiene, carbon tetrachloride, hexachloroethane, perchloroethylene.
K017	Epichlorohydrin, chloroethers [bis(chloromethyl) ether and bis (2-chloroethyl) ethers], trichloropropane, dichloropropanols.
K018	1,2-dichloroethane, trichloroethylene, hexachlorobutadiene, hexachlorobenzene.
K019	Ethylene dichloride, 1,1,1-trichloroethane, 1,1,2-trichloroethane, tetrachloroethanes (1,1,2,2-tetrachloroethane and 1,1,1,2-tetrachloroethane), trichloroethylene, tetrachloroethylene, carbon tetrachloride, chloroform, vinyl chloride, vinylidene chloride.
K020	Ethylene dichloride, 1,1,1-trichloroethane, 1,1,2-trichloroethane, tetrachloroethanes (1,1,2,2-tetrachloroethane and 1,1,1,2-tetrachloroethane), trichloroethylene, tetrachloroethylene, carbon tetrachloride, chloroform, vinyl chloride, vinylidene chloride.
K021	Antimony, carbon tetrachloride, chloroform.
K022	Phenol, tars (polycyclic aromatic hydrocarbons).

K023	Phthalic anhydride, maleic anhydride.
K024	Phthalic anhydride, 1,4-naphthoquinone.
K025	Meta-dinitrobenzene, 2,4-dinitrotoluene.
K026	Paraldehyde, pyridines, 2-picoline.
K027	Toluene diisocyanate, toluene-2, 4-diamine.
K028	1,1,1-trichloroethane, vinyl chloride.
K029	1,2-dichloroethane, 1,1,1-trichloroethane, vinyl chloride, vinylidene chloride, chloroform.
K030	Hexachlorobenzene, hexachlorobutadiene, hexachloroethane, 1,1,1,2-tetrachloroethane, 1,1,2,2-tetrachloroethane, ethylene dichloride.
K031	Arsenic.
K032	Hexachlorocyclopentadiene.
K033	Hexachlorocyclopentadiene.
K034	Hexachlorocyclopentadiene.
K035	Creosote, chrysene, naphthalene, fluoranthene benzo(b) fluoranthene, benzo(a)pyrene, indeno(1,2,3-cd) pyrene, benzo (a)anthracene, dibenzo(a)anthracene, acenaphthalene.
K036	Toluene, phosphorodithioic and phosphorothioic acid esters.
K037	Toluene, phosphorodithioic and phosphorothioic acid esters.
K038	Phorate, formaldehyde, phosphorodithioic and phosphorothioic acid esters.
K039	Phosphorodithioic and phosphorothioic acid esters.
K040	Phorate, formaldehyde, phosphorodithioic and phosphorothioic acid esters.
K041	Toxaphene.
K042	Hexachlorobenzene, ortho-dichlorobenzene.
K043	2,4-dichlorophenol, 2,6-dichlorophenol, 2,4,6-trichlorophenol.
K044	N.A.
K045	N.A.
K046	Lead.
K047	N.A.
K048	Hexavalent chromium, lead.
K049	Hexavalent chromium, lead.
K050	Hexavalent chromium.
K051	Hexavalent chromium, lead.
K052	Lead.
K060	Cyanide, napthalene, phenolic compounds, arsenic.
K061	Hexavalent chromium, lead, cadmium.
K062	Hexavalent chromium, lead.
K064	Lead, cadmium.
K065	Do.

K066	Do.
K069	Hexavalent chromium, lead, cadmium.
K071	Mercury.
K073	Chloroform, carbon tetrachloride, hexachloroethane, trichloroethane, tetrachloroethylene, dichloroethylene, 1,1,2,2-tetrachloroethane.
K083	Aniline, diphenylamine, nitrobenzene, phenylenediamine.
K084	Arsenic.
K085	Benzene, dichlorobenzenes, trichlorobenzenes, tetrachlorobenzenes, pentachlorobenzene, hexachlorobenzene, benzyl chloride.
K086	Lead, hexavalent chromium.
K087	Phenol, naphthalene.
K088	Cyanide (complexes).
K090	Chromium.
K091	Do.
K093	Phthalic anhydride, maleic anhydride.
K094	Phthalic anhydride.
K095	1,1,2-trichloroethane, 1,1,1,2-tetrachloroethane, 1,1,2,2-tetrachloroethane.
K096	1,2-dichloroethane, 1,1,1-trichloroethane, 1,1,2-trichloroethane.
K097	Chlordane, heptachlor.
K098	Toxaphene.
K099	2,4-dichlorophenol, 2,4,6-trichlorophenol.
K100	Hexavalent chromium, lead, cadmium.
K101	Arsenic.
K102	Arsenic.
K103	Aniline, nitrobenzene, phenylenediamine.
K104	Aniline, benzene, diphenylamine, nitrobenzene, phenylenediamine.
K105	Benzene, monochlorobenzene, dichlorobenzenes, 2,4,6-trichlorophenol.
K106	Mercury.
K107	1,1-Dimethylhydrazine (UDMH).
K108	1,1-Dimethylhydrazine (UDMH).
K109	1,1-Dimethylhydrazine (UDMH).
K110	1,1-Dimethylhydrazine (UDMH).
K111	2,4-Dinitrotoluene.
K112	2,4-Toluenediamine, *o* -toluidine, *p* -toluidine, aniline.
K113	2,4-Toluenediamine, *o* -toluidine, *p* -toluidine, aniline.
K114	2,4-Toluenediamine, *o* -toluidine, *p* -toluidine.
K115	2,4-Toluenediamine.

K116	Carbon tetrachloride, tetrachloroethylene, chloroform, phosgene.
K117	Ethylene dibromide.
K118	Ethylene dibromide.
K123	Ethylene thiourea.
K124	Ethylene thiourea.
K125	Ethylene thiourea.
K126	Ethylene thiourea.
K131	Dimethyl sulfate, methyl bromide.
K132	Methyl bromide.
K136	Ethylene dibromide.
K141	Benzene, benz(a)anthracene, benzo(a)pyrene, benzo(b) fluoranthene, benzo(k)fluoranthene, dibenz(a,h)anthracene, indeno(1,2,3-cd)pyrene.
K142	Benzene, benz(a)anthracene, benzo(a)pyrene, benzo(b) fluoranthene, benzo(k)fluoranthene, dibenz(a,h)anthracene, indeno(1,2,3-cd)pyrene.
K143	Benzene, benz(a)anthracene, benzo(b)fluoranthene, benzo(k) fluoranthene.
K144	Benzene, benz(a)anthracene, benzo(a)pyrene, benzo(b) fluoranthene, benzo(k)fluoranthene, dibenz(a,h)anthracene.
K145	Benzene, benz(a)anthracene, benzo(a)pyrene, dibenz(a,h) anthracene, naphthalene.
K147	Benzene, benz(a)anthracene, benzo(a)pyrene, benzo(b) fluoranthene, benzo(k)fluoranthene, dibenz(a,h)anthracene, indeno(1,2,3-cd)pyrene.
K148	Benz(a)anthracene, benzo(a)pyrene, benzo(b)fluoranthene, benzo(k)fluoranthene, dibenz(a,h)anthracene, indeno(1,2,3-cd) pyrene.
K149	Benzotrichloride, benzyl chloride, chloroform, chloromethane, chlorobenzene, 1,4-dichlorobenzene, hexachlorobenzene, pentachlorobenzene, 1,2,4,5-tetrachlorobenzene, toluene.
K150	Carbon tetrachloride, chloroform, chloromethane, 1,4-dichlorobenzene, hexachlorobenzene, pentachlorobenzene, 1,2,4,5-tetrachlorobenzene, 1,1,2,2-tetrachloroethane, tetrachloroethylene, 1,2,4-trichlorobenzene.
K151	Benzene, carbon tetrachloride, chloroform, hexachlorobenzene, pentachlorobenzene, toluene, 1,2,4,5-tetrachlorobenzene, tetrachloroethylene.
K156	Benomyl, carbaryl, carbendazim, carbofuran, carbosulfan, formaldehyde, methylene chloride, triethylamine.
K157	Carbon tetrachloride, formaldehyde, methyl chloride, methylene chloride, pyridine, triethylamine.
K158	Benomyl, carbendazim, carbofuran, carbosulfan, chloroform, methylene chloride.

K159	Benzene, butylate, eptc, molinate, pebulate, vernolate.
K161	Antimony, arsenic, metam-sodium, ziram.
K169	Benzene.
K170	Benzo(a)pyrene, dibenz(a,h)anthracene, benzo (a) anthracene, benzo (b)fluoranthene, benzo(k)fluoranthene, 3-methylcholanthrene, 7, 12-dimethylbenz(a)anthracene.
K171	Benzene, arsenic.
K172	Benzene, arsenic.
K174	1,2,3,4,6,7,8-Heptachlorodibenzo-p-dioxin (1,2,3,4,6,7,8-HpCDD), 1,2,3,4,6,7,8-Heptachlorodibenzofuran (1,2,3,4,6,7,8-HpCDF), 1,2,3,4,7,8,9-Heptachlorodibenzofuran (1,2,3,6,7,8,9-HpCDF), HxCDDs (All Hexachlorodibenzo-p-dioxins), HxCDFs (All Hexachlorodibenzofurans), PeCDDs (All Pentachlorodibenzo-p-dioxins), OCDD (1,2,3,4,6,7,8,9-Octachlorodibenzo-p-dioxin, OCDF (1,2,3,4,6,7,8,9-Octachlorodibenzofuran), PeCDFs (All Pentachlorodibenzofurans), TCDDs (All tetrachlorodi-benzo-p-dioxins), TCDFs (All tetrachlorodibenzofurans).
K175	Mercury
K176	Arsenic, Lead.
K177	Antimony.
K178	Thallium.
K181	Aniline, o-anisidine, 4-chloroaniline, p-cresidine, 2,4-dimethylaniline, 1,2-phenylenediamine, 1,3-phenylenediamine.

N.A.—Waste is hazardous because it fails the test for the characteristic of ignitability, corrosivity, or reactivity.

[46 FR 4619, Jan. 16, 1981]

Editorial Note: ForFederal Registercitations affecting Appendix VII, part 261, see the List of CFR Sections Affected, which appears in the Finding Aids section of the printed volume and on GPO Access.

Appendix VIII to Part 261—Hazardous Constituents

top

Common name	Chemical abstracts name	Chemical abstracts No.	Hazardous waste No.
A2213	Ethanimidothioic acid, 2-(dimethylamino) -N-hydroxy-2-oxo-, methyl ester	30558–43–1	U39
Acetonitrile	Same	75–05–8	U00
Acetophenone	Ethanone, 1-phenyl-	98–86–2	U00
2-Acetylaminefluarone	Acetamide, N-9H-fluoren-2-yl-	53–96–3	U00
Acetyl chloride	Same	75–36–5	U00

1-Acetyl-2-thiourea	Acetamide, N-(aminothioxomethyl)-	591–08–2	P00
Acrolein	2-Propenal	107–02–8	P00
Acrylamide	2-Propenamide	79–06–1	U00
Acrylonitrile	2-Propenenitrile	107–13–1	U00
Aflatoxins	Same	1402–68–2	
Aldicarb	Propanal, 2-methyl-2-(methylthio)-, O-[(methylamino)carbonyl]oxime	116–06–3	P07
Aldicarb sulfone	Propanal, 2-methyl-2- (methylsulfonyl) -, O-[(methylamino) carbonyl] oxime	1646–88–4	P20
Aldrin	1,4,5,8-Dimethanonaphthalene, 1,2,3,4,10,10-10-hexachloro-1,4,4a,5,8,8a-hexahydro-, (1alpha,4alpha,4abeta,5alpha,8alpha, 8abeta)-	309–00–2	P00
Allyl alcohol	2-Propen-1-ol	107–18–6	P00
Allyl chloride	1-Propane, 3-chloro	107–05–1	
Aluminum phosphide	Same	20859–73–8	P00
4-Aminobiphenyl	[1,1′-Biphenyl]-4-amine	92–67–1	
5-(Aminomethyl)-3-isoxazolol	3(2H)-Isoxazolone, 5-(aminomethyl)-	2763–96–4	P00
4-Aminopyridine	4-Pyridinamine	504–24–5	P00
Amitrole	1H-1,2,4-Triazol-3-amine	61–82–5	U01
Ammonium vanadate	Vanadic acid, ammonium salt	7803–55–6	P11
Aniline	Benzenamine	62–53–3	U01
o-Anisidine (2-methoxyaniline)	Benzenamine, 2-Methoxy-	90–04–0	
Antimony	Same	7440–36–0	
Antimony compounds, N.O.S.[1]			
Aramite	Sulfurous acid, 2-chloroethyl 2-[4-(1,1-dimethylethyl)phenoxy]-1-methylethyl ester	140–57–8	
Arsenic	Same	7440–38–2	
Arsenic compounds, N.O.S.[1]			
Arsenic acid	Arsenic acid H_3AsO_4	7778–39–4	P01
Arsenic pentoxide	Arsenic oxide As_2O_5	1303–28–2	P01
Arsenic trioxide	Arsenic oxide As_2O_3	1327–53–3	P01

Auramine	Benzenamine, 4,4'-carbonimidoylbis [N,N-dimethyl	492–80–8	U01
Azaserine	L-Serine, diazoacetate (ester)	115–02–6	U01
Barban	Carbamic acid, (3-chlorophenyl) -, 4-chloro-2-butynyl ester	101–27–9	U28
Barium	Same	7440–39–3	
Barium compounds, N.O.S.[1]			
Barium cyanide	Same	542–62–1	P01
Bendiocarb	1,3-Benzodioxol-4-ol, 2,2-dimethyl-, methyl carbamate	22781–23–3	U27
Bendiocarb phenol	1,3-Benzodioxol-4-ol, 2,2-dimethyl-,	22961–82–6	U36
Benomyl	Carbamic acid, [1- [(butylamino) carbonyl]- 1H-benzimidazol-2-yl] -, methyl ester	17804–35–2	U27
Benz[c]acridine	Same	225–51–4	U01
Benz[a]anthracene	Same	56–55–3	U01
Benzal chloride	Benzene, (dichloromethyl)-	98–87–3	U01
Benzene	Same	71–43–2	U01
Benzenearsonic acid	Arsonic acid, phenyl-	98–05–5	
Benzidine	[1,1'-Biphenyl]-4,4'-diamine	92–87–5	U02
Benzo[b]fluoranthene	Benz[e]acephenanthrylene	205–99–2	
Benzo[j]fluoranthene	Same	205–82–3	
Benzo(k)fluoranthene	Same	207–08–9	
Benzo[a]pyrene	Same	50–32–8	U02
p-Benzoquinone	2,5-Cyclohexadiene-1,4-dione	106–51–4	U19
Benzotrichloride	Benzene, (trichloromethyl)-	98–07–7	U02
Benzyl chloride	Benzene, (chloromethyl)-	100–44–7	P02
Beryllium powder	Same	7440–41–7	P01
Beryllium compounds, N.O.S.[1]			
Bis(pentamethylene)-thiuram tetrasulfide	Piperidine, 1,1'-(tetrathiodicarbonothioyl)-bis-	120–54–7	
Bromoacetone	2-Propanone, 1-bromo-	598–31–2	P01
Bromoform	Methane, tribromo-	75–25–2	U22
4-Bromophenyl phenyl ether	Benzene, 1-bromo-4-phenoxy-	101–55–3	U03
Brucine	Strychnidin-10-one, 2,3-dimethoxy-	357–57–3	P01
Butyl benzyl phthalate	1,2-Benzenedicarboxylic acid, butyl phenylmethyl ester	85–68–7	
Butylate	Carbamothioic acid, bis(2-methylpropyl)-, S-ethyl ester	2008–41–5	

Cacodylic acid	Arsinic acid, dimethyl-	75–60–5	U13
Cadmium	Same	7440–43–9	
Cadmium compounds, N.O.S.[1]			
Calcium chromate	Chromic acid H_2CrO_4, calcium salt	13765–19–0	U03
Calcium cyanide	Calcium cyanide $Ca(CN)_2$	592–01–8	P02
Carbaryl	1-Naphthalenol, methylcarbamate	63–25–2	U27
Carbendazim	Carbamic acid, 1H-benzimidazol-2-yl, methyl ester	10605–21–7	U37
Carbofuran	7-Benzofuranol, 2,3-dihydro-2,2-dimethyl-, methylcarbamate	1563–66–2	P12
Carbofuran phenol	7-Benzofuranol, 2,3-dihydro-2,2-dimethyl-	1563–38–8	U36
Carbon disulfide	Same	75–15–0	P02
Carbon oxyfluoride	Carbonic difluoride	353–50–4	U03
Carbon tetrachloride	Methane, tetrachloro-	56–23–5	U21
Carbosulfan	Carbamic acid, [(dibutylamino) thio] methyl-, 2,3-dihydro-2,2-dimethyl-7-benzofuranyl ester	55285–14–8	P18
Chloral	Acetaldehyde, trichloro-	75–87–6	U03
Chlorambucil	Benzenebutanoic acid, 4-[bis(2-chloroethyl)amino]-	305–03–3	U03
Chlordane	4,7-Methano-1H-indene, 1,2,4,5,6,7,8,8-octachloro-2,3,3a,4,7,7a-hexahydro-	57–74–9	U03
Chlordane (alpha and gamma isomers)			U03
Chlorinated benzenes, N.O.S.[1]			
Chlorinated ethane, N.O.S.[1]			
Chlorinated fluorocarbons, N.O.S.[1]			
Chlorinated naphthalene, N.O.S.[1]			
Chlorinated phenol, N.O.S.[1]			
Chlornaphazin	Naphthalenamine, N,N′-bis(2-chloroethyl)-	494–03–1	U02
Chloroacetaldehyde	Acetaldehyde, chloro-	107–20–0	P02
Chloroalkyl ethers, N.O.S.[1]			
p-Chloroaniline	Benzenamine, 4-chloro-	106–47–8	P02
Chlorobenzene	Benzene, chloro-	108–90–7	U03
Chlorobenzilate	Benzeneacetic acid, 4-chloro-alpha-(4-chlorophenyl)-alpha-hydroxy-, ethyl	510–15–6	U03

	ester		
p-Chloro-m-cresol	Phenol, 4-chloro-3-methyl-	59–50–7	U039
2-Chloroethyl vinyl ether	Ethene, (2-chloroethoxy)-	110–75–8	U042
Chloroform	Methane, trichloro-	67–66–3	U044
Chloromethyl methyl ether	Methane, chloromethoxy-	107–30–2	U046
beta-Chloronaphthalene	Naphthalene, 2-chloro-	91–58–7	U047
o-Chlorophenol	Phenol, 2-chloro-	95–57–8	U048
1-(o-Chlorophenyl)thiourea	Thiourea, (2-chlorophenyl)-	5344–82–1	P026
Chloroprene	1,3-Butadiene, 2-chloro-	126–99–8	
3-Chloropropionitrile	Propanenitrile, 3-chloro-	542–76–7	P027
Chromium	Same	7440–47–3	
Chromium compounds, N.O.S.[1]			
Chrysene	Same	218–01–9	U050
Citrus red No. 2	2-Naphthalenol, 1-[(2,5-dimethoxyphenyl)azo]-	6358–53–8	
Coal tar creosote	Same	8007–45–2	
Copper cyanide	Copper cyanide CuCN	544–92–3	P029
Copper dimethyldithiocarbamate	Copper, bis(dimethylcarbamodithioato-S,S′)-,	137–29–1	
Creosote	Same		U051
p-Cresidine	2-Methoxy-5-methylbenzenamine	120–71–8	
Cresol (Cresylic acid)	Phenol, methyl-	1319–77–3	U052
Crotonaldehyde	2-Butenal	4170–30–3	U053
m-Cumenyl methylcarbamate	Phenol, 3-(methylethyl)-, methyl carbamate	64–00–6	P202
Cyanides (soluble salts and complexes) N.O.S.[1]			P030
Cyanogen	Ethanedinitrile	460–19–5	P031
Cyanogen bromide	Cyanogen bromide (CN)Br	506–68–3	U246
Cyanogen chloride	Cyanogen chloride (CN)Cl	506–77–4	P033
Cycasin	beta-D-Glucopyranoside, (methyl-ONN-azoxy)methyl	14901–08–7	
Cycloate	Carbamothioic acid, cyclohexylethyl-, S-ethyl ester	1134–23–2	
2-Cyclohexyl-4,6-dinitrophenol	Phenol, 2-cyclohexyl-4,6-dinitro-	131–89–5	P034
Cyclophosphamide	2H-1,3,2-Oxazaphosphorin-2-amine,	50–18–0	U058

	N,N-bis(2-chloroethyl)tetrahydro-, 2-oxide		
2,4-D	Acetic acid, (2,4-dichlorophenoxy)-	94–75–7	U24
2,4-D, salts, esters			U24
Daunomycin	5,12-Naphthacenedione, 8-acetyl-10-[(3-amino-2,3,6-trideoxy-alpha-L-lyxo-hexopyranosyl)oxy]-7,8,9,10-tetrahydro-6,8,11-trihydroxy-1-methoxy-, (8S-cis)-	20830–81–3	U05
Dazomet	2H–1,3,5-thiadiazine-2-thione, tetrahydro-3,5-dimethyl	533–74–4	
DDD	Benzene, 1,1′-(2,2-dichloroethylidene) bis[4-chloro-	72–54–8	U06
DDE	Benzene, 1,1′-(dichloroethenylidene)bis [4-chloro-	72–55–9	
DDT	Benzene, 1,1′-(2,2,2-trichloroethylidene) bis[4-chloro-	50–29–3	U06
Diallate	Carbamothioic acid, bis(1-methylethyl)-, S-(2,3-dichloro-2-propenyl) ester	2303–16–4	U06
Dibenz[a,h]acridine	Same	226–36–8	
Dibenz[a,j]acridine	Same	224–42–0	
Dibenz[a,h]anthracene	Same	53–70–3	U06
7H-Dibenzo[c,g]carbazole	Same	194–59–2	
Dibenzo[a,e]pyrene	Naphtho[1,2,3,4-def]chrysene	192–65–4	
Dibenzo[a,h]pyrene	Dibenzo[b,def]chrysene	189–64–0	
Dibenzo[a,i]pyrene	Benzo[rst]pentaphene	189–55–9	U06
1,2-Dibromo-3-chloropropane	Propane, 1,2-dibromo-3-chloro-	96–12–8	U06
Dibutyl phthalate	1,2-Benzenedicarboxylic acid, dibutyl ester	84–74–2	U06
o-Dichlorobenzene	Benzene, 1,2-dichloro-	95–50–1	U07
m-Dichlorobenzene	Benzene, 1,3-dichloro-	541–73–1	U07
p-Dichlorobenzene	Benzene, 1,4-dichloro-	106–46–7	U07
Dichlorobenzene, N.O.S.[1]	Benzene, dichloro-	25321–22–6	
3,3′-Dichlorobenzidine	[1,1′-Biphenyl]-4,4′-diamine, 3,3′-dichloro-	91–94–1	U07
1,4-Dichloro-2-butene	2-Butene, 1,4-dichloro-	764–41–0	U07
Dichlorodifluoromethane	Methane, dichlorodifluoro-	75–71–8	U07
Dichloroethylene, N.O.S.[1]	Dichloroethylene	25323–30–2	
1,1-Dichloroethylene	Ethene, 1,1-dichloro-	75–35–4	U07
1,2-Dichloroethylene	Ethene, 1,2-dichloro-, (E)-	156–60–5	U07
Dichloroethyl ether	Ethane, 1,1′oxybis[2-chloro-	111–44–4	U02
Dichloroisopropyl ether	Propane, 2,2′-oxybis[2-chloro-	108–60–1	U02

Dichloromethoxy ethane	Ethane, 1,1′-[methylenebis(oxy)]bis[2-chloro-	111–91–1	U02
Dichloromethyl ether	Methane, oxybis[chloro-	542-88-1	P01
2,4-Dichlorophenol	Phenol, 2,4-dichloro-	120–83–2	U08
2,6-Dichlorophenol	Phenol, 2,6-dichloro-	87–65–0	U08
Dichlorophenylarsine	Arsonous dichloride, phenyl-	696–28–6	P03
Dichloropropane, N.O.S.[1]	Propane, dichloro-	26638–19–7	
Dichloropropanol, N.O.S.[1]	Propanol, dichloro-	26545–73–3	
Dichloropropene, N.O.S.[1]	1-Propene, dichloro-	26952–23–8	
1,3-Dichloropropene	1-Propene, 1,3-dichloro-	542–75–6	U08
Dieldrin	2,7:3,6-Dimethanonaphth[2,3-b]oxirene, 3,4,5,6,9,9-hexachloro-1a,2,2a,3,6,6a,7,7a-octahydro-, (1aalpha,2beta,2aalpha,3beta,6beta,6aalpha,7beta,7aalpha)-	60–57–1	P03
1,2:3,4-Diepoxybutane	2,2′-Bioxirane	1464–53–5	U08
Diethylarsine	Arsine, diethyl-	692–42–2	P03
Diethylene glycol, dicarbamate	Ethanol, 2,2′-oxybis-, dicarbamate	5952–26–1	U39
1,4-Diethyleneoxide	1,4-Dioxane	123–91–1	U10
Diethylhexyl phthalate	1,2-Benzenedicarboxylic acid, bis(2-ethylhexyl) ester	117–81–7	U02
N,N′-Diethylhydrazine	Hydrazine, 1,2-diethyl-	1615–80–1	U08
O,O-Diethyl S-methyl dithiophosphate	Phosphorodithioic acid, O,O-diethyl S-methyl ester	3288–58–2	U08
Diethyl-p-nitrophenyl phosphate	Phosphoric acid, diethyl 4-nitrophenyl ester	311–45–5	P04
Diethyl phthalate	1,2-Benzenedicarboxylic acid, diethyl ester	84–66–2	U08
O,O-DiethylO-pyrazinylphosphoro-thioate	Phosphorothioic acid, O,O-diethyl O-pyrazinyl ester	297–97–2	P04
Diethylstilbesterol	Phenol, 4,4′-(1,2-diethyl-1,2-ethenediyl) bis-, (E)-	56–53–1	U08
Dihydrosafrole	1,3-Benzodioxole, 5-propyl-	94–58–6	U09
Diisopropylfluorophosphate (DFP)	Phosphorofluoridic acid, bis(1-methylethyl) ester	55–91–4	P04
Dimethoate	Phosphorodithioic acid, O,O-dimethyl S-[2-(methylamino)-2-oxoethyl] ester	60–51–5	P04
3,3′-Dimethoxybenzidine	[1,1′-Biphenyl]-4,4′-diamine, 3,3′-	119–90–4	U09

	dimethoxy-		
p-Dimethylaminoazobenzene	Benzenamine, N,N-dimethyl-4-(phenylazo)-	60–11–7	U09
2,4-Dimethylaniline (2,4-xylidine)	Benzenamine, 2,4-dimethyl-	95–68–1	
7,12-Dimethylbenz[a] anthracene	Benz[a]anthracene, 7,12-dimethyl-	57–97–6	U09
3,3′-Dimethylbenzidine	[1,1′-Biphenyl]-4,4′-diamine, 3,3′-dimethyl-	119–93–7	U09
Dimethylcarbamoyl chloride	Carbamic chloride, dimethyl-	79–44–7	U09
1,1-Dimethylhydrazine	Hydrazine, 1,1-dimethyl-	57–14–7	U09
1,2-Dimethylhydrazine	Hydrazine, 1,2-dimethyl-	540–73–8	U09
alpha,alpha-Dimethylphenethylamine	Benzeneethanamine, alpha,alpha-dimethyl-	122–09–8	P04
2,4-Dimethylphenol	Phenol, 2,4-dimethyl-	105–67–9	U10
Dimethyl phthalate	1,2-Benzenedicarboxylic acid, dimethyl ester	131–11–3	U10
Dimethyl sulfate	Sulfuric acid, dimethyl ester	77–78–1	U10
Dimetilan	Carbamic acid, dimethyl-, 1-[(dimethylamino) carbonyl]-5-methyl-1H-pyrazol-3-yl ester	644–64–4	P19
Dinitrobenzene, N.O.S.[1]	Benzene, dinitro-	25154–54–5	
4,6-Dinitro-o-cresol	Phenol, 2-methyl-4,6-dinitro-	534–52–1	P04
4,6-Dinitro-o-cresol salts			P04
2,4-Dinitrophenol	Phenol, 2,4-dinitro-	51–28–5	P04
2,4-Dinitrotoluene	Benzene, 1-methyl-2,4-dinitro-	121–14–2	U10
2,6-Dinitrotoluene	Benzene, 2-methyl-1,3-dinitro-	606–20–2	U10
Dinoseb	Phenol, 2-(1-methylpropyl)-4,6-dinitro-	88–85–7	P02
Di-n-octyl phthalate	1,2-Benzenedicarboxylic acid, dioctyl ester	117–84–0	U01
Diphenylamine	Benzenamine, N-phenyl-	122–39–4	
1,2-Diphenylhydrazine	Hydrazine, 1,2-diphenyl-	122–66–7	U10
Di-n-propylnitrosamine	1-Propanamine, N-nitroso-N-propyl-	621–64–7	U11
Disulfiram	Thioperoxydicarbonic diamide, tetraethyl	97–77–8	
Disulfoton	Phosphorodithioic acid, O,O-diethyl S-[2-(ethylthio)ethyl] ester	298–04–4	P03
Dithiobiuret	Thioimidodicarbonic diamide $[(H_2N)C(S)]_2NH$	541–53–7	P04
Endosulfan	6,9-Methano-2,4,3-benzodioxathiepin, 6,7,8,9,10,10-hexachloro-1,5,5a,6,9,9a-hexahydro-, 3-oxide	115–29–7	P05

Concentra Medical Centers
10909 I-10 East Frwy Houston, TX 77029
Phone: (713) 973-7943 Fax: (713) 973-7947

Service Date: 02/11/2006
Patient Name: Sittig, Charles B.
SSN: 437-19-0197

Medical Examination Report
FOR COMMERCIAL DRIVER FITNESS DETERMINATION

1. DRIVER'S INFORMATION Driver completes this section

Driver's Name (Last, First, Middle)	Social Security No.	Birth Date	Age	Sex		Date of Exam
(b) (6) [redacted]	(b) (6) [redacted]	(b) (6) [redacted]	(b) [redacted]	☒ Male ☐ Female	☐ New Certification ☑ Recertification ☐ Follow Up	02/11/2006

Address:	City, State, ZIP Code	Work Tel: / Home Tel	Driver's License No.	License Class	State of Issue
(b) (6) [redacted]	(b) (6) [redacted]	(b) (6) [redacted]	(b) (6) [redacted]	☑ A ☐ B ☐ C ☐ D ☐ Other	TX

2. HEALTH HISTORY Driver completes this section, but medical examiner is encouraged to discuss with driver.

Yes No
- ☐ ☑ Any illness or injury in last 5 years?
- ☐ ☑ Head/brain injuries, disorders or illnesses
- ☐ ☑ Seizures, epilepsy - If Yes, list medications:
- ☐ ☑ Eye disorders or impaired vision (except corrective lenses)
- ☐ ☑ Ear disorders, loss of hearing or balance
- ☐ ☑ Heart disease or heart attack; other cardiovascular condition If Yes, list medications:
- ☐ ☑ Heart surgery (valve replacement/bypass, angioplasty, pacemaker)
- ☐ ☑ High blood pressure If Yes, list medications:
- ☐ ☑ Muscular disease

Yes No
- ☐ ☑ Shortness of breath
- ☐ ☑ Lung disease, emphysema, asthma, chronic bronchitis
- ☐ ☑ Kidney disease, dialysis
- ☐ ☑ Liver disease
- ☐ ☑ Digestive problems
- ☐ ☑ Diabetes or elevated blood sugar controlled by: ☐ diet ☐ pills ☐ insulin
- ☐ ☑ Nervous or psychiatric disorders, e.g., severe depression If Yes, list medications:
- ☐ ☑ Loss of, or altered consciousness
- ☐ ☑ Surgery

Yes No
- ☐ ☑ Fainting, dizziness
- ☐ ☑ Sleep disorders, pauses in breathing while asleep, daytime sleepiness, loud snoring
- ☐ ☑ Stroke or paralysis
- ☐ ☑ Missing or impaired hand, arm foot, leg, finger, toe
- ☐ ☑ Spinal injury or disease
- ☐ ☑ Chronic low back pain
- ☐ ☑ Regular, frequent alcohol use
- ☐ ☑ Narcotic or habit forming drug use

For any YES answer, indicate onset date, diagnosis, treating physician's name and address, and any current limitation. List all medications (including over-the-counter medications) used regularly or recently

I certify that the above information is complete and true. I understand that inaccurate, false or missing information may invalidate the examination and my Medical Examiner's Certificate.
I authorize Concentra Health Services Inc., its subsidiaries, divisions and related entities (collectively "Concentra") to provide all or any of my medical records to my employer and release Concentra, its employees, physicians, nurses, technicians and any other employees from any and all liabilities, claims, or causes of action that may result from this authorization.

(b) (6) [redacted] — Driver Signature

02/11/06 — Date

Medical Examiner's Comments on Health History (The medical examiner must review and discuss with the driver any "yes" answers and potential hazards of medications, including over-the-counter medications, while driving. This discussion must be documented below.)

unremarkable

Testing (Medical Examiner completes Section 3 through 7)

3. VISION Standard: At least 20/40 acuity (Snellen) in each eye with or without correction. At least 70° peripheral in horizontal meridian measured in each eye. The use of corrective lenses should be noted on the Medical Examiner's Certificate.

INSTRUCTIONS: *When other than the Snellen chart is used, give test results in Snellen-comparable values. In recording distance vision, use 20 feet as normal. Report visual acuity as a ratio with 20 as numerator and the smallest type read at 20 feet as denominator. If the applicant wears corrective lenses, these should be worn while visual acuity is being tested. If the driver habitually wears contact lenses, or intends to do so while driving, sufficient evidence of good tolerance and adaptation to their use must be obvious.* ***Monocular drivers are not qualified.***
Numerical readings must be provided.

ACUITY	UNCORRECTED	CORRECTED	HORIZONTAL FIELD OF VISION
Right Eye	20/ 30	20/	Right Eye 95 °
Left Eye	20/ 30	20/	Left Eye 95 °
Both Eyes	20/ 30	20/	°

Applicant can recognize and distinguish among traffic control signals and devices showing standard red, green, and amber colors? ☒ Yes ☐ No
Applicant meets visual acuity requirement only when wearing: ☐ Corrective Lenses
Monocular Vision: ☐ Yes ☒ No

Complete next line only if vision testing is done by an ophthalmologist or optometrist

Date of Examination	Name of Ophthalmologist or Optometrist (Print)	Tel No.	License No/State of Issue	Signature

4. HEARING Standard: a) Must first perceive forced whispered voice >= 5 ft., with or without hearing aid, or b) average hearing loss in better ear <= 40 dB
☐ Check if hearing aid used for tests ☐ Check if hearing aid required to meet standard.

INSTRUCTIONS: *To convert audiometric test results from ISO to ANSI: -14 dB from ISO for 500Hz, -10 dB for 1,000Hz, -8.5 dB for 2,000HZ. To average, add the readings for 3 frequencies tested and divide by 3.*

Numerical reading must be recorded.

a) Record distance from individual at which forced whispered voice can first be heard.	Right Ear	Left Ear
	5 Feet	5 Feet

b) If audiometer is used, record hearing loss in decibels. (acc to ANSI Z24.5-1951)	Right Ear 500 Hz	1000 Hz	2000 Hz	Left Ear 500 Hz	1000 Hz	2000 Hz
	NA	→	→	NA	→	→
	Average			Average		

5. BLOOD PRESSURE / PULSE RATE Numerical readings must be recorded. *Medical examiner should take at least 2 readings to confirm blood pressure.*

Blood Pressure	Systolic	Diastolic
	130	88

Driver qualified if <= 140/90.

Pulse Rate: ☒ Regular ☐ Irregular
Record Pulse Rate: 64
Is post exercise required? ☐ Yes ☐ No
Pulse Rate after 2 mins exercise _____ bpm
Exercise Type

Reading	Category	Expiration Date	Recertification
140-159/90-99	Stage 1	1 year	1 year if <= 140/90 One-time certificate for 3 months if 141-159/91-99
160-179/100-109	Stage 2	One-time certificate for 3 months	1 year from date of exam if <= 140/90
>= 180/110	Stage 3	Disqualified 6 months from date of exam if <= 140/90	6 months if <= 140/90

© 1996 - 2006 Concentra Health Services, Inc All Rights Reserved

Two Incident Reports

May 20, 2009

Port Arthur Chemical and Environmental Services, LLC ("PACES")

2420 South Gulfway

Port Arthur, TX 77640

713-676-1460

Two Incident Reports
Joey Sutter and Charles Sittig

Joey Sutter

Pre- Incident

Several days before December 17, 2008 Trailer 267 was loaded with oil from an emulsion breaking process at the PACES site 2420 South Gulfway, Port Arthur, TX.

On December 17, 2008, Brian Weathers sampled Trailer 267, removing a sample of the oil from inside the trailer (See Attachment 1).

Incident

On December 18, 2008, at 2:00pm, Suzi Mock and Joey Sutter went to Trailer 267 to resample the oil in the trailer. Ms. Mock climbed to the top of Trailer 267 first. Mr. Sutter started up the ladder after and behind Ms. Mock. As Mr. Sutter reached the top of the latter he collapsed. Ms. Mock grabbed Mr. Sutter so he would not fall from the Trailer 267. Ms. Mock pulled Mr. Sutter to the top of the Trailer 267. Mr. Sutter and Ms. Mock did not open the dome lid nor did she or Mr. Sutter obtain a sample at this time. This was at 2:00pm, Thursday, December 18, 2008.

Ms. Mock called for help and at 2:10pm (12/18/08) the Port Arthur Fire Department was notified (See Attachment 2). Within a few minutes of 2:00pm (12/18/08) Mr. Wood went to Ms. Mock to assist her with Mr. Sutter. Mr. Wood also assisted Ms. Mock to turn Mr. Sutter over, still on top of the Trailer 267.

At 2:20pm (12/18/08) the PAFD arrived and by 2:35pm, Mr. Sutter was removed from the top of the Trailer 267 by the Port Arthur Fire Department (See Attachment 2).

Ms. Mock did not experience any illness from any hydrogen sulfide release when she was with Mr. Sutter on top of the Trailer 267. Ms. Mock's personal hydrogen sulfide monitor did not trigger when she was on top of the Trailer 267. Ms. Mock's monitor was set to alarm at 10 ppm hydrogen sulfide. Mr. Wood did not experience any illness from hydrogen sulfide while assisting Mr. Sutter.

The Port Arthur Fire Department placed Mr. Sutter's clothes and the PAFD hydrogen sulfide meter in a bag. The Port Arthur Fire Department measured a reading of -0- hydrogen sulfide. The Port Arthur Fire Department returned to the top of Trailer 267 two hours after Mr. Sutter was removed and measured only 1 ppm hydrogen sulfide (See Attachment 2).

EPAPA011000155

Post Incident

OSHA tested Mr. Sutter's clothes for hydrogen sulfide and did not find any hydrogen sulfide (See Attachment 3). OSHA tested the head space over an oil sample from Trailer 267 and did not find any hydrogen sulfide (See Attachment 4).

Hydrogen sulfide technical information sources state that it takes 700 to 1000 ppm of hydrogen sulfide to knockdown an individual with hydrogen sulfide. In addition, when a group of people are together near a hydrogen sulfide release all persons suffer health problems (See Attached 5).

OSHA measured organic sulfur compounds in the oil which exhibits a smell similar to hydrogen sulfide, but the organic sulfur compounds are liquid at ambient temperatures and not a toxic gas.

In addition, the oil in Trailer 267 was not heated prior to the December 18, 2008 incident, since no steam was available and the trailer had been loaded prior to December 17, 2008 without any modifications of the oil for two days (See Attachment 6).

In summary, pre-incident information and post incident information does not support the concept that hydrogen sulfide was released from a trailer during a short time of a few minutes at such level of 700 to 1000 ppm to cause one of two people side-by-side to collapse and die in minutes while the second person is holding on to the dying person without having her personal hydrogen sulfide alarm activate (See Attachment 7).

In addition, a third person climbed to the top of Trailer 267 to assist the two already on trailer without getting sick from hydrogen sulfide. Also, the Port Arthur Fire Department representative did not note any problems with anyone other than Mr. Sutter. Remember, Trailer 267 was sampled the day before with out any problems.

Joey Sutter Autopsy Comments

The autopsy based its conclusions on a lab report from NMS Labs dated March 25, 2009. This NMS Lab Report based its conclusion on one test of one blood sample which was received on March 5, 2009 by NMS Labs, when the death occurred on December 18, 2008. This delay in testing appears to have violated acceptable protocols.

The NMS Lab Report did not state that Mr. Sutter died from hydrogen sulfide poisoning. The report stated that the measured value of thiosulfate in the blood sample was similar to values found in four other situations where people were believed to have died from hydrogen sulfide. However, the thiosulfate value of 43% of the cases were above 11 mcg/ml (value measured in Mr. Sutter's blood) and 43% were below the 11 mcg/ml value. The NMS Lab Report did not speak to another NMS Lab analysis report on urine from Mr. Sutter received January 15, 2009 (See Attachment 8). This report stated that thiosulfate in urine was normal. Technical information states that thiosulfate in urine is just as valid as thiosulfate in blood for measuring hydrogen sulfide exposure.

Both the NMS Lab (3/25/09) report and the Mr. Sutter Autopsy had many facts wrong. For example, both stated that the site operator (PACES) was boiling water in a closed dome tank (trailer) to drive off hydrogen sulfide. Remember, this material is oil in a tanker which is not heated, since no steam was available. Also, the thiosulfate analysis of the blood did not follow correct procedures, where the thiosulfate test in the urine did follow correct lab procedures.

The Sutter Autopsy Report did show that Mr. Sutter was over weight to the point of being obese and a smoker.

Charles Brent Sittig

Incident

On April 14, 2009, Charles Brent Sittig (truck driver for PACES) returned to the site with a load of weak caustic solution that was not loaded by him. Mr. Sittig parked the tractor and trailer to be unloaded by another person and moved away from the trailer into the maintenance office area of the plant site.

Mr. Sittig sat in a chair and collapsed while making a telephone call. Mr. Sittig was a few feet away from the maintenance person who went to him after he collapsed. The maintenance person did not have any affects from hydrogen sulfide and there was not any hydrogen sulfide release or triggered any alarms.

Post Incident

The material from Mr. Sittig's truck was placed in NV1 Tank and tested for sulfides. The measured sulfide in the material was less than 1 ppm sulfide (See Attachment 9).

Data from Mr. Sittig's file shows that he was overweight. In the past his blood pressure was close to values that would disqualify him as a driver.

In summary, Mr. Sittig was not engaged in activity at the time of death. There was no hydrogen sulfide released at the time of his death. Mr. Sittig was near others that did not experience any hydrogen sulfide problems and his trailer contained material that was below 1 ppm sulfide which he did not load or unload.

Summary of Both Incident Reports
(Mr. Sutter and Mr. Sittig)

Hydrogen sulfide poisoning could have not been the mechanism that caused the two deaths, since the exposure level (700 to 1000 ppm) required to knockdown and kill quickly would have affected companions, triggered alarms, showed up in clothes, and introduced odors over a wide area since the odor threshold of hydrogen sulfide is 0.005 ppm.

In addition, low levels of hydrogen sulfide over long periods of time would not have been a factor in the deaths since recent and past results show no adverse impacts from low levels of hydrogen sulfide. Most recent data shows that low levels of hydrogen sulfide lowers blood pressure (See Attachment 10).

EPAPA011000158

Attachment

1

General Affidavit

STATE OF TEXAS

COUNTY OF Jefferson

BEFORE ME, the undersigned Notary, Patricia Grace Kruger **on this** 3 **day of** March, **2009, personally appeared** Brian Weathers **known to me to be a credible person and of lawful age, who being by me duly sworn, on his oath, deposes and says:**

> **My name is Brian Weathers. I am over 21 years of age. I was the Supervisor on December 17, 2008 and on December 18, 2008 at the Port Arthur Chemical and Environmental Services, LLC ("PACES") plant site at the time Joey Sutter passed away. I have personal knowledge and experience with the PACES' personal H_2S Monitoring Equipment and Sampling of Trailers. During of December 17, 2008 my H_2S alarm at PACES did not sound an alarm warning when I obtained a sample from Trailer 267. H_2S Monitor was set at 10 ppm H_2S to alarm on December 17, 2008 when I sampled the Trailer 267.**

Brian Weathers
(Signature of Affiant)

Brian Weathers
(Printed Name of Affiant)

(b) (6) [redacted]
(Address of Affiant, Line 1)

(Address of Affiant, Line 2)

STATE OF TEXAS

COUNTY OF Jefferson

Sworn to and subscribed before me on this 3 **day of** March, **2009,**

by _____.

SEAL
Patricia Grace Kruger
Notary Public
State of Texas
My Commission Expires
May 29, 2010

Patricia Grace Kruger
(Notary Public Signature)

Attachment

2

FDID *	State *	MM Incident Date *	DD	YYYY	Station	Incident Number *	Exposure *	Delete / Change / No Activity	NFIRS -1 Basic
NH715	TX	12	18	2008	2	08-0012882	000		

Location*

☐ Check this box to Indicate that the address for this incident is provided on the Wildland Fire Module In Section B "Alternative Location Specification". Use only for Wildland fires.

Census Tract ____ - ____

☒ Street address
☐ Intersection
☐ In front of
☐ Rear of
☐ Adjacent to
☐ Directions

Number/Milepost	Prefix	Street or Highway	Street Type	Suffix
2420	S	Gulfway	DR	

Apt./Suite/Room	City	State	Zip Code
	PORT ARTHUR	TX	77640 -

Cross street or directions, as applicable

Incident Type *

21 | EMS call, excluding vehicle
Incident Type

Aid Given or Received*

☐ Mutual aid received
☐ Automatic aid recv.
☐ Mutual aid given
☐ Automatic aid given
☐ Other aid given
☒ None

Their FDID | Their State
Their Incident Number

E1 Date & Times

Midnight is 0000

Check boxes if dates are the same as Alarm Date.

	Month	Day	Year	Hr Min Sec
ALARM always required				
Alarm *	12	18	2008	14:10:33
ARRIVAL required, unless canceled or did not arrive				
☒ Arrival *	12	18	2008	14:19:20
CONTROLLED Optional, Except for wildland fires				
☐ Controlled				
LAST UNIT CLEARED, required except for wildland fires				
☒ Last Unit Cleared	12	18	2008	16:45:03

E2 Shift & Alarms

Local Option

Shift or Platoon	Alarms	District
B	01	2

E3 Special Studies

Local Option

Special Study ID# | Special Study Value

Actions Taken *

23 | Extricate, disentangle
Primary Action Taken (1)

33 | Provide advanced life
Additional Action Taken (2)

Additional Action Taken (3)

G1 Resources *

☒ Check this box and skip this section if an Apparatus or Personnel form is used.

	Apparatus	Personnel
Suppression	0002	0006
EMS	0001	
Other		

☐ Check box if resource counts include aid received resources.

G2 Estimated Dollar Losses & Values

LOSSES: Required for all fires if known. Optional for non fires.

				None
Property	$	000	000	☐
Contents	$	000	000	☐

PRE-INCIDENT VALUE: Optional

Property	$	000	000	☐
Contents	$	000	000	☐

Completed Modules

Fire-2
☐ Structure-3
Civil Fire Cas.-4
Fire Serv. Cas.-5
EMS-6
HazMat-7
☐ Wildland Fire-8
Apparatus-9
Personnel-10
☐ Arson-11

H1* Casualties ☐ None

	Deaths	Injuries
Fire Service		
Civilian		

H2 Detector

Required for Confined Fires.

1 ☐ Detector alerted occupants
2 ☐ Detector did not alert them
U ☐ Unknown

H3 Hazardous Materials Release

N ☐ None
1 ☐ Natural Gas: slow leak, no evacuation or HazMat actions
2 ☐ Propane gas: <21 lb. tank (as in home BBQ grill)
3 ☐ Gasoline: vehicle fuel tank or portable container
4 ☐ Kerosene: fuel burning equipment or portable storage
5 ☐ Diesel fuel/fuel oil: vehicle fuel tank or portable
6 ☐ Household solvents: home/office spill, cleanup only
7 ☐ Motor oil: from engine or portable container
8 ☐ Paint: from paint cans totaling < 55 gallons
0 ☐ Other: Special HazMat actions required or spill > 55gal.. Please complete the HazMat form

I Mixed Use Property

NN ☐ Not Mixed
10 ☐ Assembly use
20 ☐ Education use
33 ☐ Medical use
40 ☐ Residential use
51 ☐ Row of stores
53 ☐ Enclosed mall
58 ☐ Bus. & Residential
59 ☐ Office use
60 ☐ Industrial use
63 ☐ Military use
65 ☐ Farm use
00 ☐ Other mixed use

Property Use*

Structures

☐ Church, place of worship
☐ Restaurant or cafeteria
☐ Bar/Tavern or nightclub
☐ Elementary school or kindergarten
☐ High school or junior high
☐ College, adult education
☐ Care facility for the aged
☐ Hospital

341 ☐ Clinic, clinic type infirmary
342 ☐ Doctor/dentist office
361 ☐ Prison or jail, not juvenile
419 ☐ 1-or 2-family dwelling
429 ☐ Multi-family dwelling
439 ☐ Rooming/boarding house
449 ☐ Commercial hotel or motel
459 ☐ Residential, board and care
464 ☐ Dormitory/barracks
519 ☐ Food and beverage sales

539 ☐ Household goods, sales, repairs
579 ☐ Motor vehicle/boat sales/repair
571 ☐ Gas or service station
599 ☐ Business office
615 ☐ Electric generating plant
629 ☐ Laboratory/science lab
700 ☐ Manufacturing plant
819 ☐ Livestock/poultry storage (barn)
882 ☐ Non-residential parking garage
891 ☒ Warehouse

Outside

☐ Playground or park
☐ Crops or orchard
☐ Forest (timberland)
☐ Outdoor storage area
☐ Dump or sanitary landfill
☐ Open land or field

936 ☐ Vacant lot
938 ☐ Graded/care for plot of land
946 ☐ Lake, river, stream
951 ☐ Railroad right of way
960 ☐ Other street
961 ☐ Highway/divided highway
962 ☐ Residential street/driveway

981 ☐ Construction site
984 ☐ Industrial plant yard

Lookup and enter a Property Use code only if you have NOT checked a Property Use box:

Property Use 891

Warehouse

NFIRS-1 Revision 03/11/99

Person/Entity Involved
Local Option

Business name (if applicable)	ECA Environmental Services
Area Code - Phone Number	409 - 293 - 6854
Mr., Ms., Mrs.	
First Name	Joey
MI	
Last Name	Sutter
Suffix	
Number	2420
Prefix	S
Street or Highway	Gulfway
Street Type	DR
Suffix	
Post Office Box	
Apt./Suite/Room	
City	PORT ARTHUR
State	TX
Zip Code	77640 -

☐ Check This Box if same address as incident location. Then skip the three duplicate address lines.

☐ More people involved? Check this box and attach Supplemental Forms (NFIRS-1S) as necessary

Owner
Local Option

☐ Same as person involved? Then check this box and skip The rest of this section.

Business name (if Applicable)	
Area Code - Phone Number	- -
Mr., Ms., Mrs.	
First Name	
MI	
Last Name	
Suffix	
Number	
Prefix	
Street or Highway	
Street Type	
Suffix	
Post Office Box	
Apt./Suite/Room	
City	
State	
Zip Code	-

Check this box if same address as incident location. Then skip the three duplicate address lines.

Remarks
Local Option

<<Logs>> 14:11:03 00005150 : sc enrte ; 14:14:36 00005062 : PER 5014 CALL BACK ADVISED
ULL ARREST/E2 EMS ADVISED ; 14:19:30 00005062 : E2 1410 1419 ; 14:19:54 00005062 :
TONE ; 14:20:17 00005062 : W2 REQUEST R1 ASSIST ; 14:21:44 00005062 : TURN AT
PALON'S/ENVIRONMENTAL//RD BEFORE IC BRIDGE ST COM ON RIGHT DOWN DIRT RD ; 14:28:08 00005145
e2-heavy set man ontop of the tanker ; 14:30:06 00005145 : bringing him down now ;
:33:23 00005145 : hr1 has a firefighter riding with ems to hospital enroute to pick him up
////st mary ; 14:45:56 00005145 : e2 to st marys to give information ; 14:56:51 00005145 :
at st mary ; 15:03:45 00005145 : told unit 3 to call the chief the hospital is treating
is as a hazmat incident ; 15:19:40 00005145 : e2 leaving st mary going back to scene ;
15:31:04 00005145 : hr1 toned out of service ; 15:32:18 00005145 : e2 back on the csene ;
:04:51 00005145 : msds is non toxic ; 16:07:20 00005145 : e2 back in service going to
ation ; 16:14:27 00005145 : ernout to st mary hospital ; 16:23:31 00005145 : at st mary
again ; 16:45:03 00005145 : Incident Closed ;

12/18/2008 at 14:10:33 dispatched To 2420 S Gulfway DR /PORT ARTHUR, TX 77640. The location is a Warehouse. The incident was determined to be a(n) EMS call, excluding vehicle accident with injury.

14:19:20 arrived on scene.
The following actions were performed on scene:
Extricate, disentangle
Provide advanced life support (ALS)

Units responding were:
unit E2 responded.

Authorization

Officer in charge ID	Signature	Position or rank	Assignment	Month	Day	Year
29450	PEAKE, THOMAS W	CA		12	18	2008

Member making report ID	Signature	Position or rank	Assignment	Month	Day	Year
☒ 29450	PEAKE, THOMAS W	CA		12	18	2008

Check box if Officer in charge.

FDID *	State *	MM	DD	YYYY	Station	Incident Number *	Exposure *	
NH715	TX	12	18	2008	2	08-0012882	000	Complete Narrative

Narrative:

<<Logs>> 14:11:03 00005150 : sc enrte ; 14:14:36 00005062 : PER 5014 CALL BACK ADVISED FULL ARREST/E2 EMS ADVISED ; 14:19:30 00005062 : E2 1410 1419 ; 14:19:54 00005062 : RETONE ; 14:20:17 00005062 : W2 REQUEST R1 ASSIST ; 14:21:44 00005062 : TURN AT TALON'S/ENVIRONMENTAL//RD BEFORE IC BRIDGE ST COM ON RIGHT DOWN DIRT RD ; 14:28:08 00005145 : e2-heavy set man ontop of the tanker ; 14:30:06 00005145 : bringing him down now ; 14:33:23 00005145 : hr1 has a firefighter riding with ems to hospital enroute to pick him up ////st mary ; 14:45:56 00005145 : e2 to st marys to give information ; 14:56:51 00005145 : e2 at st mary ; 15:03:45 00005145 : told unit 3 to call the chief the hospital is treating this as a hazmat incident ; 15:19:40 00005145 : e2 leaving st mary going back to scene ; 15:31:04 00005145 : hr1 toned out of service ; 15:32:18 00005145 : e2 back on the csene ; 16:04:51 00005145 : msds is non toxic ; 16:07:20 00005145 : e2 back in service going to station ; 16:14:27 00005145 : ernout to st mary hospital ; 16:23:31 00005145 : at st mary again ; 16:45:03 00005145 : Incident Closed ;

On 12/18/2008 at 14:10:33 dispatched To 2420 S Gulfway DR /PORT ARTHUR, TX 77640. The location is a Warehouse. The incident was determined to be a(n) EMS call, excluding vehicle accident with injury.

14:19:20 arrived on scene.
The following actions were performed on scene:
Extricate, disentangle
Provide advanced life support (ALS)

Units responding were:
Unit E2 responded.
Unit HR1 responded.
Unit SC63 responded.

16:45:03 all units back in service.

Dispatched to difficulty breathing. While enroute the call was upgraded to a full arrest. POSTF patient on top of a tanker. Company emloyees had begun cpr. Fire engineer Barideaux and fire fighter Delacerda climbed on top of tanker and took over cpr. Captain Peake directed resources needed for the retrieval of patient from atop the tanker. Company employee made mention that the patient may have been exposed to toxic fumes. FD backboarded the patient and lowered the patient to the ground and onto waiting Stat Care ems stretcher. Fire fighter Thibedeaux rode with patient to SMH to assist ems.
HR1 went to SMH while E2 gathered patient info. E2 went to SMH and found hospital doing a hazmat wash on patient. E2 returned to scene to take drager readings from top of tanker. Drager read 1 ppm of H2S. Obtained msds sheet on tanker contents. Msds showed chemical to be sulfurized isobutylene. Toxicological Data showed all areas to be: Practically non-toxic. E2 returned to SMH msds sheet for distribution to the hospital and JP. E2 returned to service.

HR-1 Supplement:

HR-1 responded to assist. FF Thibodeaux rode in with EMS to St. Mary. Upon arrival the EMS staff complained of a strong odor from the pt. and his clothing. Hospital staff removed clothing and placed into a biohazard bag. FD placed a meter in the bag. The meter detected 0 lel, no H2S, no CO, and indicated an O2 % of 20.9. The deceased was placed in a secure room ouitside of the ER. FF Thibodeaux was provided with scrubs from the hospital and was

FDID *	State *	MM	DD	YYYY	Station	Incident Number *	Exposure *	
NH715	TX	12	18	2008	2	08-0012882	000	Complete Narrative

Narrative:

able to remove her clothing and shower. Capt. Achord and FE Richard donned class B suits and airpacks and assisted in placing the deceased into two body bags for transfer to the morgue. Both the class B suits and the pt.'s clothing went with the decedant to the morgue.

FDID *	State *	Incident Date * (MM DD YYYY)	Station	Incident Number *	Exposure *	Delete / Change	NFIRS - 10 Personnel
NH715	TX	12 18 2008	2	08-0012882	000		

Apparatus or Resource * (Use codes listed below)	Date and Times (Check if same as alarm date)	Sent [X]	Number of People *	Use (Check ONE box for each apparatus to indicate its main use at the incident.)	Actions Taken (List up to 4 actions for each apparatus and each personnel.)
ID E2 Type 11	Dispatch [X] 12 18 2008 14:10 Arrival [X] 12 18 2008 14:19 Clear [X] 12 18 2008 16:45	Sent [X]	3	[X] Suppression [ ] EMS [ ] Other	

Personnel ID	Name	Rank or Grade	Attend [X]	Action Taken	Action Taken	Action Taken	Action Taken
9450	PEAKE, THOMAS	CA	X				
317	DELACERDA, TRAVIS	FF	X				
785	BARIDEAUX, THADDEUS	FF	X				

Apparatus or Resource * (Use codes listed below)	Date and Times (Check if same as alarm date)	Sent [X]	Number of People *	Use (Check ONE box for each apparatus to indicate its main use at the incident.)	Actions Taken (List up to 4 actions for each apparatus and each personnel.)
ID HR1 Type 70	Dispatch [X] 12 18 2008 14:10 Arrival [X] 12 18 2008 14:30 Clear [X] 12 18 2008 16:45	Sent [X]	3	[X] Suppression [ ] EMS [ ] Other	

Personnel ID	Name	Rank or Grade	Attend [X]	Action Taken	Action Taken	Action Taken	Action Taken
5700	ACHORD, JON	CA	X				
005	RICHARD, BRANDAN	FE	X				
25	THIBODEAUX, ANGELL	FF	X				

Apparatus or Resource * (Use codes listed below)	Date and Times (Check if same as alarm date)	Sent [X]	Number of People *	Use (Check ONE box for each apparatus to indicate its main use at the incident.)	Actions Taken (List up to 4 actions for each apparatus and each personnel.)
ID SC63 Type 76	Dispatch [X] 12 18 2008 14:10 Arrival [X] 12 18 2008 14:22 Clear [X] 12 18 2008 16:45	Sent [X]	0	[ ] Suppression [X] EMS [ ] Other	

Personnel ID	Name	Rank or Grade	Attend [X]	Action Taken	Action Taken	Action Taken	Action Taken

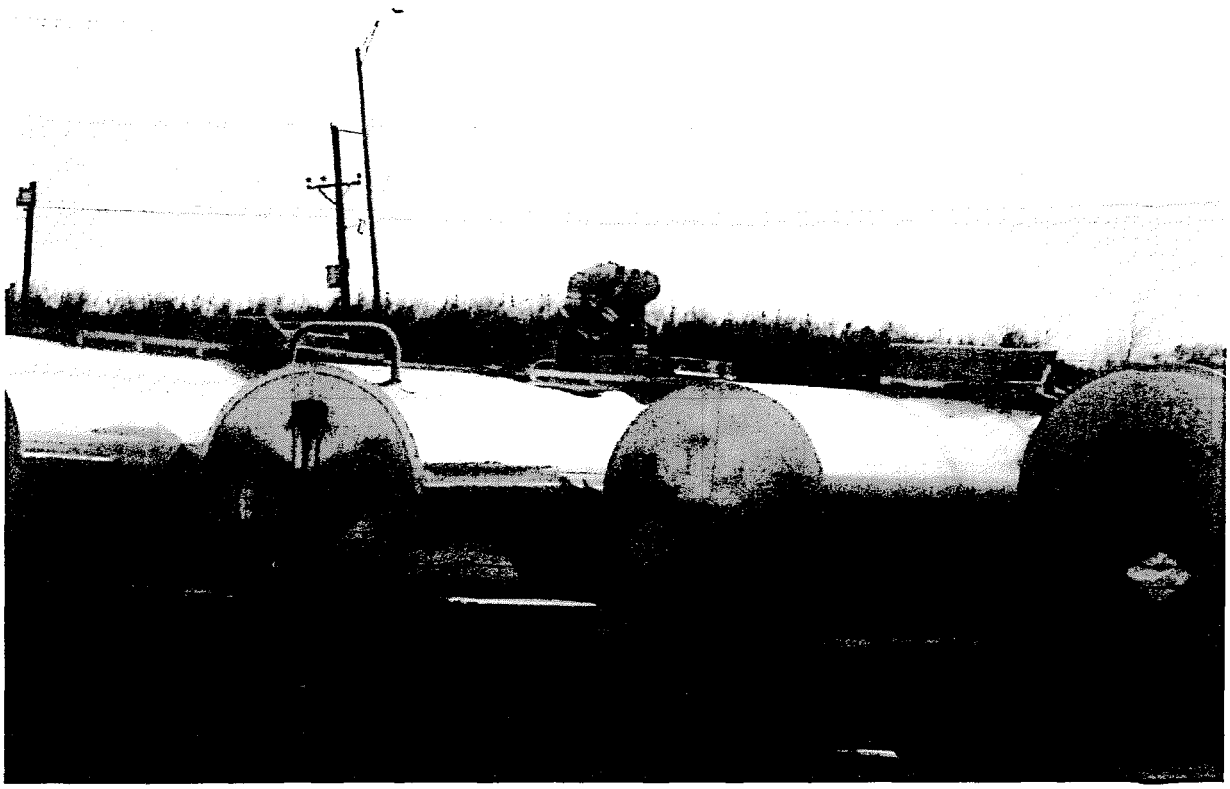

Port Arthur Fire Department Haz-Mat Sampling Tanker Unit 267 (Close-up)

See Port Arthur Fire Department Incident Report # 08-0012882 Page 3 HR-1 Supplement

Indicating Draeger Read of 1 ppm of H2S (Incident Report Attached)

Attachment

3

Air Sampling Report U.S. Department of Labor Occupational Safety and Health Administration.

1. Reporting ID	2. Inspection Number	3. Sampling Number
626700	311960975	401326608

4. Establishment Name

PORT ARTHUR CHEMICAL & ENVIRONMENTAL SERVICES

5. CSHO ID	6. Sampling Date	7. Shipping Date	8. Date Result Received
V9900	18 DEC 2008	07 JAN 2009	

9. Job Title	10. Occupational Code	11. Number Exposed
Not applicable		

12. Frequency of Exposure

Exposure Summary

14. Substance Code	15. Rqstd	16. Smpl Type	17. Exp Type	18. Exp Level	19. Units	20. PEL	21. Adj	22. Severity	23. Citation information: No Cit	FTA	Over Exp	Eng	PPE	Trng	Med	OTH

TWA calculated on actual time sampled
The I. H. is free to make changes on the Form 91B and submit them directly to IMIS

26. Analyst's Comments (Analytical Method) GC/MS ANALYSIS

Air from the closed bag was drawn through a Carbotrap 300 tube for volatiles analysis. Swatches of cloth were cut from sweat pants (2), shirt (3), and jeans (2) and extracted in carbon disulfide for GC/MS analysis. Draeger tube analysis for hydrogen sulfide and mercaptans was conducted. Swatches from shirt and jeans were extracted in water, which was tested with pH strips.

D-55438: HazMat suit was not analyzed.

D-55439: Carbotrap tube: Numerous disulfide compounds including CS2, dimethyl disulfide, diethyl disulfide, dimethyl trisulfide, diethyl trisulfide, and others. Also, acetone, isopropanol, ethyl benzene, xylene, and 2-ethyl hexanol. Sweat pants: Dimethyl disulfide, fatty acids, glycerin, and long-chain alcohols and amines. Shirt: Elemental sulfur, phthalate and adipate esters, phenol and alkyl phenols, nonyl phenol isomers, alkyl cyclopentadienes, fatty acids, alcohols and amines, dimethyl disulfide, benzyl alcohol, and detergent compounds. Jeans: Elemental sulfur, phenol and alkyl phenols, alkyl cyclopentadienes, disulfide compounds, phthalate and adipate esters, and detergent compounds. Draeger tubes produced no evidence of hydrogen sulfide or mercaptans. pH on cloth swatches tested was not elevated, indicating absence of caustics such as NaOH.

27. Chain of Custody	Init.	Date
a. Seals Intact		Y
b. Rec'd In Lab	DJK	14 JAN 2009
c. Rec'd by Anal.	PH	14 JAN 2009
d. Anal. Completed	PH	21 JAN 2009
e. Calc. Checked	MEE	31 JAN 2009
f. Supr. OK'd	WP	22 JAN 2009

28 Submission number	1975-1	1975-2
29 Lab Sample No. (Minutes/Type)	D55438 B	D55439 B

30. Analyte	31. Analysis Results/	32. Sample included in calculations of
M125 Qualitative Mass-Spec Analysis	NA	BULK

Attachment

4

Air Sampling Report U.S. Department of Labor Occupational Safety and Health Administration.

1. Reporting ID	2. Inspection Number	3. Sampling Number
626700	311960975	401326616

4. Establishment Name

PORT ARTHUR CHEMICAL & ENVIRONMENTAL SERVICES

5. CSHO ID	6. Sampling Date	7. Shipping Date	8. Date Result Received
V9900	18 DEC 2008	07 JAN 2009	

9. Job Title	10. Occupational Code	11. Number Exposed
Not applicable		

12. Frequency of Exposure

Exposure Summary

14. Substance Code	15. Rqstd	16. Smpl Type	17. Exp Type	18. Exp Level	19. Units	20. PEL	21. Adj	22. Severity	23. Citation information: No Cit	FTA	Over Exp	Eng	PPE	Trng	Med	OTH

TWA calculated on actual time sampled
The I. H. is free to make changes on the Form 91B and submit them directly to IMIS

26. Analyst's Comments (Analytical Method) HISTORICAL GC/MS

A portion of bulk oil was placed in carbon disulfide for analysis by GC/mass spectrometry. Testing for pH was done by placing a portion of oil in water, then testing the water with pH indicator strips. Testing for H2S and SO3 in bottle headspace was done using detector tubes.

D-55599: Most abundant organic analytes were phenol, cresols and other alkyl phenols. Also found were numerous sulfides, disulfides, trisulfides, and tetrasulfides, as well as toluene, xylene, and elemental sulfur. Indicator strips gave an approximate pH of 6. H2S and SO2 were not detected in headspace over the oil.

27. Chain of Custody	Init.	Date
a. Seals Intact		Y
b. Rec'd In Lab	DJK	21 JAN 2009
c. Rec'd by Anal.	PH	22 JAN 2009
d. Anal. Completed	PH	23 JAN 2009
e. Calc. Checked	MEE	23 JAN 2009
f. Supr. OK'd	WP	26 JAN 2009

28 Submission number 1975-3

29 Lab Sample No. (Minutes/Type) D55599 B

30. Analyte	31. Analysis Results/ 32. Sample included in calculations of
M125 Qualitative Mass-Spec Analysis	BULK

Because the results for air samples are used in further calculations, the number of figures reported in section 31 may not reflect the actual precision of the analysis. Calculated confidence limits (UCL & LCL) should be rounded to no more than three significant figures.
The precision of analysis for wipe samples and for bulk material samples justify rounding results to no more than two significant figures.

The Sampling and Analytical Error (SAE) is the current value for the specific chemical(s) and should be used for the calculations.
Blank values are reported for reference only. Appropriate blank corrections have been applied to the samples by the Salt Lake Technical Center. Blank results are less than the reporting limit(s) unless otherwise noted.

33. Analyte Code SAE Value

M125

L	MILLIGRAMS PER LITER (URINE)	D	MICROGRAMS PER DECILITER (BLOOD)
J	PICO CURIES PER LITER (RADON GAS)	P	PARTS PER MILLION
[illegible]	FIBERS PER CUBIC CENTIMETER	X	MICROGRAMS
M	MILLIGRAMS PER CUBIC METER	%	PERCENT

Sampling Number: 401326616

Attachment

5

AMERICAN JOURNAL OF INDUSTRIAL MEDICINE 35:192–195 (1999)

Hydrogen Sulfide Poisoning: Clarification of Some Controversial Issues

Thomas H. Milby, MD,* and Randall C. Baselt, PhD[1]

Background *Hydrogen sulfide is a toxic gas about which much has been written. We discuss here several issues we believe would benefit from further clarification.*
Conclusions *We conclude that: 1) Certain neurotoxic effects of exposure are probably due to a direct toxic effect on the brain, while others are almost certainly a result of hypoxia secondary to H_2S-induced respiratory insufficiency; 2) pulmonary edema is a common consequence of poisoning and there is suggestive evidence of hyperactive airway responses in some individuals following brief H_2S-induced unconsciousness (knockdown); 3) criteria for acceptable community levels are very different than those governing occupational standards; 4) urinary thiosulfate determinations can be useful for monitoring occupational exposure; and 5) determination of sulfide ion concentrations in blood or major organs can be useful in corroborating a diagnosis of fatal H_2S toxicity, but there are many pitfalls in collecting, storing, and analyzing tissue and fluid samples.* Am. J. Ind. Med. 35:192–195, 1999. © *1999 Wiley-Liss, Inc.*

KEY WORDS: hydrogen sulfide; neurotoxic effects; pulmonary edema; urinary thiosulfate; blood sulfide.

INTRODUCTION

There have been several reviews of the toxicity of hydrogen sulfide to humans published in the last several decades [Milby, 1962; NRC, 1979; Beauchamp et al., 1984; Reiffenstein et al., 1992; EPA, 1993]. In the view of the authors, the majority of the data presented in these reviews continues to be valid, but some issues deserve further clarification. In this short communication, we consider the neurotoxic effects of acute exposure, effects on the lungs, community exposure issues, and diagnosis of poisoning utilizing urine, blood, and tissue analyses.

NEUROTOXIC EFFECTS

The above-cited reviews are generally consistent in the view that the most dramatic potential consequences of hydrogen sulfide exposure occur at high concentrations. At 750–1,000 ppm, inhalation of hydrogen sulfide causes abrupt physical collapse. If exposure is promptly terminated, many cases of collapse are followed by rapid and complete recovery. However, in some instances, presumably where exposure is more pronounced or prolonged, sudden collapse may give way to rapidly fatal respiratory paralysis [Milby, 1962; EPA, 1993; Guidotti, 1994].

Certain transitory neurotoxic effects associated with exposure to hydrogen sulfide such as dizziness, incoordination, and headache are probably due to the direct toxic effect of hydrogen sulfide on the brain: these effects appear far too quickly to be attributed to hypoxia. A phenomenon referred to as "knockdown" has been reported in oil field workers and others to describe sudden, brief loss of consciousness followed by immediate full recovery after short-lived exposure to very high concentrations of hydrogen sulfide (e.g., 750–1,000 ppm) [Guidotti, 1994; Aves, 1929; Smith and Gosselin, 1979]. Knockdown is likely a consequence of a direct toxic effect of hydrogen sulfide on the brain. This direct effect is believed to be due to the intracellular inhibition of cytochrome oxidase by sulfide ion, preventing utilization of oxygen [Nicholls, 1975].

Most victims of acute hydrogen sulfide poisoning who recover do so promptly and completely [Milby, 1962; NRC,

[1]Chemical Toxicology Institute, Foster City, California
*Correspondence to: Thomas H. Milby, M.D., 1399 Ygnacio Valley Rd., Suite 25, Walnut Creek, CA 94598. E-mail: tmilby@aol.com
Accepted 11 September 1998.

© 1999 Wiley-Liss, Inc.

ELSEVIER

Legal Medicine 10 (2008) 148–152

LEGAL MEDICINE

www.elsevier.com/locate/legalmed

Case Report

Two fatalities by hydrogen sulfide poisoning: Variation of pathological and toxicological findings

Mihoko Ago *, Kazutoshi Ago, Mamoru Ogata

Department of Legal Medicine, Graduate School of Medical and Dental Sciences, Kagoshima University, Kagoshima 890-8544, Japan

Received 28 July 2007; received in revised form 26 November 2007; accepted 29 November 2007
Available online 8 February 2008

Abstract

We report the simultaneous deaths of two individuals by inhalation of hydrogen sulfide (H_2S), produced either by the putrefaction of a large quantity of sweet corn or by heavy oil that flowed out of the fuel tank of a large stranded cargo vessel. Ten workers went into a water ballast tank of the vessel to remove remaining heavy oil and suddenly felt unwell. Two of the ten workers (patient A, a male in his early thirties, and patient B, a male in his early sixties) died. Autopsies of the two patients revealed a partial green discoloration of the skin and pulmonary edema. Toxicological analysis revealed high levels of thiosulfate in the blood (0.089 mmol/L in patient A and 0.142 mmol/L in patient B). From these findings, we concluded that the cause of death in both patients was H_2S poisoning. In addition, the autopsy of patient A revealed petechiae of the palpebral conjunctiva and the mucous membrane of the mouth and erosion of the respiratory tract. The autopsy of patient B failed to reveal these observations. We presumed that patient B may have been exposed to higher H_2S levels, and that the circulation and respiration of patient B may have arrested faster than patient A. Thiosulfate levels in the blood may reflect the levels of H_2S exposure. This case suggests that the pathological and toxicological findings of H_2S poisoning vary from case to case.
© 2007 Elsevier Ireland Ltd. All rights reserved.

Keywords: Hydrogen sulfide poisoning; Thiosulfate; Pulmonary edema; Autopsy

1. Introduction

Hydrogen sulfide (H_2S) is a colorless irritant gas that is inflammable and water-soluble. H_2S has a specific gravity of 1.19 (air = 1.00) and the characteristic odor of rotten eggs [1]. H_2S is poisonous, and accidents may occur on exposure to natural gas, volcanic gas, and industrial waste. Accidents have been reported in sewage disposal facilities [2–5] and chemical processing plants [6–8], and with the ingestion of sulfur products [9,10]. H_2S is also produced naturally by the putrefaction of organic compounds. The gas produced by this process is unstable and is rapidly metabolized as thiosulfate and sulfate by hepatic oxidation, therefore, quantifying the original substances is difficult [11,12]. Fatalities by H_2S poisoning are encountered frequently in the forensic practices. There is a large amount of sulfate in the blood and urine of healthy people, whereas the thiosulfate content is very low [11,13]. In addition, thiosulfate is a major metabolite of H_2S [11]. For these reasons, thiosulfate has been reported to be a useful indicator for H_2S exposure [2–4,11,14–17]. Here, we report a case of two patients who died almost simultaneously due to H_2S poisoning. In this case, the pathological and toxicological findings were different between the two patients. We compare the findings and discuss the variable biomechanisms of H_2S poisoning.

2. Case report

A large-sized cargo vessel, approximately 36,000 tons, which was in transit with a large quantity of sweet corn, was destroyed by breaking in two due to stranding in a gulf under a heavy typhoon. The stranded cargo vessel was covered widely with a large amount of heavy oil that issued from

* Corresponding author. Tel.: +81 99 275 5313; fax: +81 99 275 5315.
E-mail address: agomiho@m.kufm.koagoshima-u.ac.jp (M. Ago).

1344-6223/$ - see front matter © 2007 Elsevier Ireland Ltd. All rights reserved.
doi:10.1016/j.legalmed.2007.11.005

EPAPA011000174

the fuel tank. Accordingly, an operation was performed to eliminate the heavy oil inside and around the cargo vessel. At approximately one month after the accident, ten workers, including our two patients entered a water ballast tank to recover the remaining heavy oil. At 11:15 a.m., all of the workers suddenly felt unwell. Eight workers escaped by themselves from the tank with clouded consciousness. At 11:58 a.m., rescue personnel equipped with gas masks found collapsed patient A (male in his early thirties) sitting on a sloped floor and leaning on a wall. At 11:59 a.m., they found collapsed patient B (male in his early sixties) lying prone on a sloped floor. His head was located on the upper side of the sloped floor. Although a small amount of black sludge had collected on the bottom of the sloped floor, the nose and mouth of both patients were not submerged in the sludge. Rescue personnel retrieved patient A from the tank at 0:04 p.m. and patient B at 0:16 p.m. The patients arrived at a hospital at 0:59 p.m. in a state of cardiopulmonary arrest. They were pronounced dead at 1:03 p.m. (patient A) and 1:04 p.m. (patient B), respectively. After using an electric fan to remove the harmful gas from the tank and about 4 h after the accident, the air concentration of H_2S, oxygen (O_2), and carbon monoxide (CO) at the scene were estimated to be 30 ppm, 20.8% and 355 ppm, respectively. Autopsies on patient A and B were performed at 20 and 24 h after death, respectively.

3. Autopsy findings

3.1. Patient A

Patient A was a male in his early thirties. He was 169 cm in height and 68 kg in weight. A slight greenish discoloration presented on his anterior cervical region and precordia. A few black subcutaneous bleedings were observed on regions of back and upper and lower limbs. The palpebral conjunctiva and the mucous membrane of the mouth revealed marked hyperemia and a few petechiae. The ocular conjunctiva revealed marked hyperemia, but was free of petechiae. The heart weighed 330 g, and a large amount of black dark-red fluid blood was retained in the heart. The left and right lungs weighed 830 and 925 g, respectively, with marked swelling and congestion. There was a little dark brown-red mucous fluid mixed with the micro foam in the trachea and bronchia. The mucous membrane of the glottis, trachea and bronchia revealed extensive erosion and submucosal hemorrhage (Fig. 1A). Extensive erosion and submucous hemorrhages were seen in the entire inner membrane of the esophagus. Erosion was found in the posterior wall of the fundus ventriculi and the cardia of the lesser curvature of the stomach. The lumen of the small intestine revealed congestion and localized erosion. The liver and the spleen weighed 1800 and 120 g, respectively, and both organs revealed no remarkable changes except for congestion. The brain weighed 1480 g, and slight cerebral edema was noted. There were no remarkable findings in other organs except for congestion.

Histological examination revealed marked congestion and edema in both lungs. Marked congestion, erosion and submucosal hemorrhage, as well as edema of the tunica propria and tela submucosa were observed in the epiglottis, glottis vocalis (Fig. 2A), trachea and bronchia. Similar findings were observed in the esophagus and stomach. Severe necroses were noted in the tracheal and bronchial glands. No remarkable changes, except for congestion, were found in other organs including the liver.

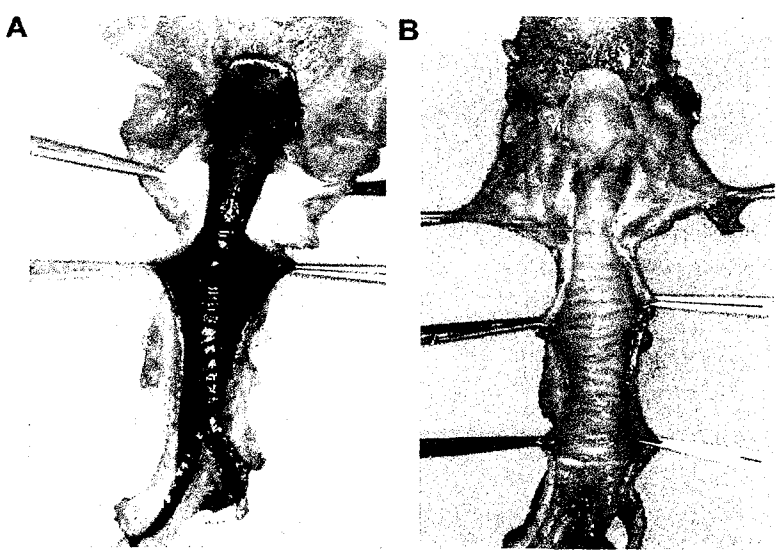

Fig. 1. The trachea of patient A (A) and B (B). The mucous of patient A reveals extensive erosion and the submucous bleeding, whereas the mucous of patient B reveals hyperemia, but is free of erosion.

EPAPA011000175

Attachment

6

General Affidavit

STATE OF TEXAS

COUNTY OF _____

BEFORE ME, the undersigned Notary, _____, on this _____ day of _____, 2009, personally appeared Matt Bowman known to me to be a credible person and of lawful age, who being by me duly sworn, on his oath, deposes and says:

"My name is Matt Bowman. I am over 21 years of age. I was the President on December 18, 2008, at the Port Arthur Chemical and Environmental Services, LLC ("PACES") plant site at the time Joey Sutter passed away. I have personal knowledge of the PACES operations. During the morning and afternoon of December 18, 2008, Trailer 267 was not heated with steam or any other source of heat. Steam was not available."

_____
(Signature of Affiant)

Matt Bowman
(Printed Name of Affiant)

_____
(Home Address)

_____
(City, State & Zip)

STATE OF TEXAS

COUNTY OF _____

Sworn to and subscribed before me on this _____ day of _____, 2009, by _____.

SEAL

_____
(Notary Public Signature)

Attachment

7

General Affidavit

STATE OF TEXAS

COUNTY OF Jefferson

BEFORE ME, the undersigned Notary, Patricia Grace Kruger, on this 3 day of March, 2009, personally appeared Suzie Mock known to me to be a credible person and of lawful age, who being by me duly sworn, on her oath, deposes and says:

> My name is Suzie Mock. I am over 21 years of age. I was an employee on December 18, 2008 at the Port Arthur Chemical and Environmental Services, LLC ("PACES") plant site at the time Joey Sutter passed away. I have personal knowledge and experience with the situation during the incident involving Joey Sutter. During the morning and afternoon of December 18, 2008 my personal monitor for the H_2S did not sound an alarm warning. My personal H_2S Monitor Alarm was set at 10 ppm for H_2S on December 18, 2008.

Suz Mock
(Signature of Affiant)

Suzie Mock
(Printed Name of Affiant)

(b) (6)
[redacted]
(Address of Affiant, Line 1)

(Address of Affiant, Line 2)

STATE OF TEXAS

COUNTY OF Jefferson

Sworn to and subscribed before me on this 3rd day of March, 2009,

by _____.

SEAL

Patricia Grace Kruger
Notary Public
State of Texas
My Commission Expires
May 29, 2010

Patricia Grace Kruger
(Notary Public Signature)

Attachment

8

NMS Labs
3701 Welsh Road, PO Box 433A, Willow Grove, PA 19090-0437
Phone: (215) 657-4900 Fax: (215) 657-2972
e-mail: nms@nmslabs.com
Robert A. Middleberg, PhD, DABFT, DABCC-TC, Laboratory Director

CONFIDENTIAL

Toxicology Report

Report Issued 01/20/2009 17:00

To: **10240**
Southeast Texas Forensic Ctr.-Beaumont
Attn: Dr. Tommy Brown
5030 Highway 69 South, Ste.700
Beaumont, TX 77705

Patient Name	SUTTER, JOEY
Patient ID	08-1253
Chain	10973749
Age	Not Given
Gender	Male
Workorder	09009238

FILED
APR 22 2009
Justice Court, Pct. 8

Positive Findings:

Compound	Result	Units	Matrix Source
Creatinine	**1959**	**mg/L**	**Urine**
Thiosulfate	**3.4**	**mcg/mL**	**Urine**
Thiosulfate (Creatinine corrected)	**1.7**	**mcg/g Creat**	**Urine**

See Detailed Findings section for additional information

Specimens Received:

ID	Tube/Container	Volume/ Mass	Collection Date/Time	Matrix Source	Miscellaneous Information
001	Gray Top Tube	10.75 mL	Not Given	Blood	
002	Red Top Tube	9.75 mL	Not Given	Urine	

All sample volumes/weights are approximations.

Specimens received on 01/15/2009.

Testing Requested:

Analysis Code	Description
4235B	Sulfhemoglobin, Blood
4472U	Thiosulfate, Urine

v.3

Detailed Findings:

Analysis and Comments	Result	Units	Rpt. Limit	Specimen Source	Analysis By
Creatinine	1959	mg/L	5.0	002 - Urine	Colorimetry
Thiosulfate	3.4	mcg/mL	1.0	002 - Urine	IC
Thiosulfate (Creatinine corrected)	1.7	mcg/g Creat	0.51	002 - Urine	IC

Other than the above findings, examination of the specimen(s) submitted did not reveal any positive findings of toxicological significance by procedures outlined in the accompanying Analysis Summary.

Reference Comments:

1. Creatinine - Urine:

   ACGIH Normal range in adults:
   300 - 3400 mg/L (mean: 1000 mg/L)
   [0.3 - 3.4 g/L (mean: 1 g/L)]
   1000 - 1600 mg/day (1.0 - 1.6 g/day).

2. Thiosulfate - Urine:

   Thiosulfate is a byproduct of the metabolic degradation of cysteine and methionine. As a result, normal endogenous levels of thiosulfate can be found in urine. However, whether normal levels of thiosulfate can be found in serum, plasma or whole blood is debatable. Certain environmental exposures, dietary conditions and pathological states can give rise to increased urinary levels of thiosulfate as well as significant concentrations in serum, plasma and/or whole blood. Hydrogen sulfide exposure is a common source of increased urinary and serum levels of thiosulfate.

   Reported endogenous thiosulfate levels in urine range from 1 - 5 mcg/mL.

3. Thiosulfate (Creatinine corrected) - Urine:

   Normal: Up to 8 mcg/g Creatinine.
   15 hours after a 60 minute exposure to air concentrations of 60 micromoles/L Hydrogen Sulfide resulted in urine concentrations up to 60 mcg/g Creatinine.

This analysis was performed under chain of custody after receipt at NMS Labs. The chain of custody documentation is on file at NMS Labs.

Unless alternate arrangements are made by you, the remainder of the submitted specimens will be discarded six (6) weeks from the date of this report; and generated data will be discarded five (5) years from the date of this report.

Analysis Summary:

Acode 4235B - Sulfhemoglobin, Blood

- Analysis by Spectrophotometry (SP) for: Sulfhemoglobin

Acode 4472U - Thiosulfate, Urine

- Analysis by Colorimetry (C) for: Creatinine
- Analysis by Ion Chromatography (IC) for: Thiosulfate, Thiosulfate (Creatinine corrected)

Attachment

9

Charles Brent Sittig

Attached is the incident report which states that Mr. Sittig was driving a tractor with a trailer loaded with Naphthenic caustic. The trailer was loaded for him at a refinery. Mr. Sittig drove to PACES and the material was unloaded without his help into Tank NV1. When Mr. Sittig died he was away from the trailer and Tank NVI with other people (e.g. Glen Olson). After Mr. Sittig died the material from NV1 was sampled and analysis of sulfides. The value measured by Set Environmental was less than 1 ppm for NV1(See Attachment). No alarms were triggered and No other people reported H2S exposure at the time of the death.

Accutest Laboratories

Report of Analysis

Client Sample ID:	NUI		
Lab Sample ID:	T27869-1	Date Sampled:	04/15/09
Matrix:	AQ - Water	Date Received:	04/24/09
		Percent Solids:	n/a
Project:	CES		

General Chemistry

Analyte	Result	MQL	SDL	Units	DF	Analyzed	By	Method
Hydroxide Alkalinity	0.0300	5.0	0.66	mg/l	1	04/29/09 15:00	MC	SM18 4500CO2D
Sulfide	0.15 U	8.0	0.15	mg/l	1	04/29/09 13:00	KD	SM 4500S+F

MQL = Method Quantitation Limit
SDL = Sample Detection Limit

U = Indicates a result < SDL
B = Indicates a result > = SDL but < MQL

Attachment

10

Synopsis of Joey Sutter Autopsy Performed 12/19/08- 04/17/09

1. Autopsy based on one piece of data on thiosulfate level from one test performed by NMS Labs on blood 2.5 months after the death of Joey Sutter with no statement on how the sample was maintained for 2.5 months.

2. This time line was beyond NMS Labs maximum blood sample life stability time of 1 month which also requires the sample to be frozen.

3. Published information on H2S poisoning in the American Journal of Industrial medicine states that sulfide concentrations in blood may increase dramatically due to biodegradation during room-temperature or refrigerated storage. It also states that specimens must be in frozen storage in air tight containers.

4. This article in American Journal of Industrial Medicine states that H2S levels must be 700 to 1,000 ppm to knockdown a person.

5. The Joey Sutter Autopsy states that he was knockdown which was a consequence of toxic effect of H2S on the brain. However, the autopsy writer ignored that Joey Sutter was with another person (Suzie Mock) during the incident on Trailer 267 and the second person did not become sick from H2S. In addition her H2S alarm set at 10 ppm did not activate, while she was on Trailer 267.

6. The autopsy writer ignored the thiosulfate urine test by NMS Labs which showed the level to be normal.

7. The autopsy writer introduced comments about the conditions of the death that were untrue and hearsay such as the tank (tanker) was filled with water and brought to a boil using steam. No steam was available and the tanker according to OSHA data contained oil.

8. The autopsy writer ignored OSHA lab results of no H2S found in the headspace of an oil sample of the material, and no H2S was measured from the decedent's clothes.

9. The NMS Report of March 25, 2009 was based on incorrect information such as boiling off hydrogen sulfide from wastewater when the material was oil and no source of steam was available for heat. The report ignored thiosulfate level in urine test which showed a normal value in the urine.

Facts Relevant to the Death of Joey Sutter (12/18/08)

1. Eyewitness testimony indicates that the sampling process had not progressed to opening the trailer vent valve or dome lid; therefore, neither individual was exposed to the contents of the trailer. An attempt was made to open one wing nut so it would be very unlikely that any gas would escape since 5 wing nuts were still secure.

2. The oil (mostly disulfide oils and low level mercaptans) had been generated in a reaction tank through processing. These oils were broken/de-emulsified from sulfidic caustic feedstock by strong acidification of the caustic solution. This acidification process is designed to release all of the H2S contained in the material. The released H2S is captured in a closed system and recondensed with virgin caustic to produce NaSH. Any vapors from the capture tank are vented to a flare system. This occurred prior to placing the oil from the reaction tank into Trailer 267.

3. The brine water generated from the processing activities in the reaction tank was titrated and showed no remaining H2S.

4. Trailer 267 was sampled the previous day without issue, or sampler becoming ill. In addition, the sampler's H2S monitor set at 10 ppm did not alarm.

5. Bleeding from the noise by Sutter indicates natural or accidental causes and not hydrogen sulfide poisoning.

6. Sutter's Body Mass Index puts him in the obese group. Sutter's lab data shows that he had nicotine in his system.

7. Port Arthur Fire Department technician measured no hydrogen sulfide from Sutter's clothes with 2 hours of the incident using a portable field meter.

Facts Relevant to the Death of Charles Brent Sittig (4/14/09)

8. Sittig died while setting and talking on a cell phone.

9. There was no release of any material near Sittig.

10. Other workers were near him (few feet away) during his death.

11. These workers did not experience any release, or problems associated with plant operations.

12. Sittig was a truck driver that did not load or unload his tranker trailer.

13. He delivered a load just prior to his death which was tested for sulfides by a third party with a value measured below 1 ppm(mg/l).

14. Using the Body Mass Index Method Sittig was overweight. He had been overweight for sever years, and in 2006 his blood pressure was very near the disqualification limit.

15. Sittig was bleeding through the noise when he had his attack which is not a symptom of hydrogen sulfide poisoning.

S1

NMS LABS

NMS Labs
3701 Welsh Road, PO Box 433A, Willow Grove, PA 19090-0437
Phone: (215) 657-4900 Fax: (215) 657-2972
e-mail: nms@nmslabs.com
Robert A. Middleberg, PhD, DABFT, DABCC-TC, Laboratory Director

CONFIDENTIAL

Toxicology Report

Report Issued 03/16/2009 11:00

To: **10240**
Southeast Texas Forensic Ctr.-Beaumont
Attn: Dr. Tommy Brown
5030 Highway 69 South, Ste.700
Beaumont, TX 77705

Patient Name	SUTTER, JOEY
Patient ID	08-1253
Chain	11019013
Age	36 Y
Gender	Male
Workorder	09049978

FILED
APR 22 2009
Justice Court, Pct. 8

Positive Findings:

Compound	Result	Units	Matrix Source
Special Request Finding(s)	Positive		Cardiac Blood

See Detailed Findings section for additional information.

Specimens Received:

ID	Tube/Container	Volume/ Mass	Collection Date/Time	Matrix Source	Miscellaneous Information
001	Gray Top Tube	11 mL	12/19/2008	Cardiac Blood	

All sample volumes/weights are approximations.
Specimens received on 03/05/2009.

Testing Requested:

Analysis Code	Description
7005SA	Special Request

v.3

Detailed Findings:

Analysis and Comments	Result	Units	Rpt. Limit	Specimen Source	Analysis By
Special Request Finding(s)	Positive			001 - Cardiac Blood	[Depending on request]

Thiosulfate = 11 mcg/mL
Reporting Limit = 2.0 mcg/mL
Analysis by Ion Chromatography

Other than the above findings, examination of the specimen(s) submitted did not reveal any positive findings of toxicological significance by procedures outlined in the accompanying Analysis Summary.

Reference Comments:

1. **Special Request Finding(s) - Cardiac Blood:**

   Thiosulfate is a byproduct of the metabolic degradation of cysteine and methionine. As a result, normal endogenous levels of thiosulfate can be found in urine. However, whether normal levels of thiosulfate can be found in serum, plasma or whole blood is debatable. **Certain environmental exposures, dietary conditions and pathological states can give rise to increased urinary levels of thiosulfate as well as significant concentrations in serum, plasma and/or whole blood.** Hydrogen sulfide exposure is a common source of increased urinary and serum levels of thiosulfate.

   After a single 20 mg oral dose of thiosulfate, reported plasma concentrations at 1.5 hr averaged 0.050 mcg/mL and declined to approximately 0.015 mcg/mL by 12 hr. After chronic daily dosing of between 15 to 60 mg, plasma concentrations were reported to range from 0.010 - 0.023 mcg/mL 2 hr after the last dose.

   Experience in our laboratory indicates that basal serum, plasma and blood concentrations of thiosulfate are less than 2 mcg/mL.

This analysis was performed under chain of custody after receipt at NMS Labs. The chain of custody documentation is on file at NMS Labs.

Unless alternate arrangements are made by you, the remainder of the submitted specimens will be discarded six (6) weeks from the date of this report; and generated data will be discarded five (5) years from the date of this report.

Analysis Summary:

Acode 7005SA - Special Request - Cardiac Blood

- Analysis by [Depending on request] for: Special Request Finding(s)

S2

CLIENT LOGIN

Site Test Catalog

SEARCH

Online Test Catalog Home

New Tests

Test Updates

Analysis Code	4472SP
Test Name	Thiosulfate, Serum/Plasma
Test Includes	Thiosulfate [IC]
Purpose	Exposure Monitoring
Category	Environmental/Occupation Toxin
Method(s)	Ion Chromatography (IC)
Specimen Requirements	3 mL Serum or Plasma
Transport Temperature	Refrigerated
Specimen Container	Lavender top tube (EDTA)
Special Handling	Promptly centrifuge and separate Serum or Plasma into a plastic screw capped vial using approved guidelines.
Light Protection	Not Required
Stability	Room Temperature: 3 day(s) Refrigerated: 9 day(s) Frozen (-20 °C): 1 month(s)
Rejection Criteria	Received Room Temperature. Polymer gel separation tube (SST or PST).
Day(s) Test Set-up	[IC] Monday-Sunday 7 days
Suggested CPT Code	[IC] 82491

A B C D E F G H I J K L M
N O P Q R S T U V W X Y Z
0 1 2 3 4 5 6 7 8 9

SEARCH

SIGN ME UP

Sign me up for e-mail updates

Note

Death B 12/18/08
Limit 1 month

Sample Received by NMS Labs 3/5/09
2.5 months after 12/18/08

Home Contact Us

© Copyright 2007, NMS Labs. nms@nmslabs.com 800.522.6671

The Thiosulfate Test in blood

S3

AMERICAN JOURNAL OF INDUSTRIAL MEDICINE 35:192–195 (1999)

Hydrogen Sulfide Poisoning: Clarification of Some Controversial Issues

Thomas H. Milby, MD,* and Randall C. Baselt, PhD[1]

Background *Hydrogen sulfide is a toxic gas about which much has been written. We discuss here several issues we believe would benefit from further clarification.*
Conclusions *We conclude that: 1) Certain neurotoxic effects of exposure are probably due to a direct toxic effect on the brain, while others are almost certainly a result of hypoxia secondary to H_2S-induced respiratory insufficiency; 2) pulmonary edema is a common consequence of poisoning and there is suggestive evidence of hyperactive airway responses in some individuals following brief H_2S-induced unconsciousness (knockdown); 3) criteria for acceptable community levels are very different than those governing occupational standards; 4) urinary thiosulfate determinations can be useful for monitoring occupational exposure; and 5) determination of sulfide ion concentrations in blood or major organs can be useful in corroborating a diagnosis of fatal H_2S toxicity,* ***but there are many pitfalls in collecting, storing, and analyzing tissue and fluid samples.*** Am. J. Ind. Med. 35:192–195, 1999. *© 1999 Wiley-Liss, Inc.*

KEY WORDS: hydrogen sulfide; neurotoxic effects; pulmonary edema; urinary thiosulfate; blood sulfide.

INTRODUCTION

There have been several reviews of the toxicity of hydrogen sulfide to humans published in the last several decades [Milby, 1962; NRC, 1979; Beauchamp et al., 1984; Reiffenstein et al., 1992; EPA, 1993]. In the view of the authors, the majority of the data presented in these reviews continues to be valid, but some issues deserve further clarification. In this short communication, we consider the neurotoxic effects of acute exposure, effects on the lungs, community exposure issues, and diagnosis of poisoning utilizing urine, blood, and tissue analyses.

NEUROTOXIC EFFECTS

The above-cited reviews are generally consistent in the view that the most dramatic potential consequences of hydrogen sulfide exposure occur at high concentrations. At 750–1,000 ppm, inhalation of hydrogen sulfide causes abrupt physical collapse. If exposure is promptly terminated, many cases of collapse are followed by rapid and complete recovery. However, in some instances, presumably where exposure is more pronounced or prolonged, sudden collapse may give way to rapidly fatal respiratory paralysis [Milby, 1962; EPA, 1993; Guidotti, 1994].

Certain transitory neurotoxic effects associated with exposure to hydrogen sulfide such as dizziness, incoordination, and headache are probably due to the direct toxic effect of hydrogen sulfide on the brain: these effects appear far too quickly to be attributed to hypoxia. A phenomenon referred to as "knockdown" has been reported in oil field workers and others to describe sudden, brief loss of consciousness followed by immediate full recovery after short-lived exposure to very high concentrations of hydrogen sulfide (e.g., 750–1,000 ppm) [Guidotti, 1994; Aves, 1929; Smith and Gosselin, 1979]. Knockdown is likely a consequence of a direct toxic effect of hydrogen sulfide on the brain. This direct effect is believed to be due to the intracellular inhibition of cytochrome oxidase by sulfide ion, preventing utilization of oxygen [Nicholls, 1975].

Most victims of acute hydrogen sulfide poisoning who recover do so promptly and completely [Milby, 1962; NRC,

[1]Chemical Toxicology Institute, Foster City, California
*Correspondence to: Thomas H. Milby, M.D., 1399 Ygnacio Valley Rd., Suite 25, Walnut Creek, CA 94598. E-mail: tmilby@aol.com
Accepted 11 September 1998.

© 1999 Wiley-Liss, Inc.

1979; Aves, 1929; Glass, 1990]. In a relatively few cases, acute, nonfatal hydrogen sulfide intoxication is followed by brain damage characterized by permanent neurological sequelae. The preponderance of scientific evidence suggests that this sequence of events is a result of hypoxia secondary to respiratory insufficiency, rather than to a direct toxic effect of hydrogen sulfide on the brain [Milby, 1962; Beauchamp et al., 1984; Haggard, 1925; Reiffenstein, 1992]. Respiratory insufficiency following exposure to this gas can occur as a consequence of apnea resulting from hydrogen sulfide-induced paralysis of the respiratory centers of the brain, or can be the result of less specific forms of interference with air flow or oxygen exchange such as airway obstruction or pulmonary edema.

EFFECTS ON THE LUNG

Pulmonary Edema

It is widely agreed that either acute or prolonged exposure to hydrogen sulfide gas can cause pulmonary edema [NRC, 1979; Beauchamp et al., 1984; Reiffenstein et al., 1992; Guidotti, 1994]. The gas is a mucous membrane irritant, although not nearly so potent an irritant as chlorine, ammonia, or sulfur dioxide. However, unlike these three highly water-soluble gases, the only moderately water-soluble hydrogen sulfide is capable of penetrating deep into the lung, where it exerts its irritant effect on the tissues that make up the terminal bronchial membranes [Haggard, 1925].

Prolonged exposure to hydrogen sulfide at concentrations in excess of 250 ppm can lead to the development of pulmonary edema [Beauchamp et al., 1984]. However, persons who are exposed to air levels that cause immediate collapse (750–1,000 ppm) appear to be at even greater risk for developing pulmonary edema, although the pulmonary symptoms may be masked by the more dramatic neurotoxic symptoms of collapse [Beauchamp et al., 1984]. In three case series reporting a total of 523 cases of acute hydrogen sulfide poisoning, pulmonary edema was diagnosed in 4–16% of the affected individuals [Kleinfeld et al., 1964; Burnett et al., 1977; Arnold et al., 1985].

Other Pulmonary Effects

Jappinen et al. [1990] assessed the possible effects of low concentrations of hydrogen sulfide on respiratory function in two cohorts, one consisting of 26 pulp mill workers with daily exposure to hydrogen sulfide in the workplace, and another made up of 10 volunteers who had asthma. The respiratory function of the pulp mill workers was monitored by measuring forced vital capacity (FVC), forced expiratory volume in 1 second (FEV_1), and bronchial responsiveness to histamine at the end of a work day, and again after at least 1 day off work. The 10 asthmatics were exposed to 2 ppm hydrogen sulfide for 30 minutes in an exposure chamber and airway resistance and specific airway conductance were assessed and ventilatory capacities were measured. No significant changes in respiratory function or bronchial responsiveness were found in either cohort, although in two asthmatic subjects changes were greater than 30% in both indicators of airway resistance. The authors concluded that short-term exposure to hydrogen sulfide at levels appreciably higher than those present in ambient air do not cause noticeable effects on respiratory function.

Bhambhani et al. [1996] exposed 19 healthy men and women to 10 ppm hydrogen sulfide for 15 minutes during exercise and found no significant changes in pulmonary function as measured by flow-volume loop, maximum ventilatory volume, and carbon monoxide diffusion capacity. The authors concluded that short-term inhalation of 10 ppm hydrogen sulfide at an elevated metabolic and ventilatory rate does not significantly alter pulmonary function in healthy men and women.

Hessel et al. [1997] assessed the pulmonary health of 175 oil and natural gas extraction and processing workers potentially exposed to hydrogen sulfide gas. The authors conducted spirometric testing and administered a respiratory symptom questionnaire. Bronchial challenge testing was not reported. Approximately one-third of the workers reported exposure to hydrogen sulfide sufficiently intense to cause symptoms and 8% experienced sudden, fleeting unconsciousness (knockdown). Spirometric testing showed no differences between the groups experiencing symptoms of knockdown and other workers. Workers who experienced knockdown reported a significant excess of certain symptoms, including shortness of breath on exertion, wheezes with chest tightness, and attacks of wheezes. The authors concluded that workers who had experienced hydrogen sulfide-related knockdown had statistically significant excesses of several respiratory symptoms consistent with airway hyperreactivity.

There are a number of reports of injuries, often fatal, among workers and others as a consequence of exposure to gases emanating from organic waste sources in which the presence of hydrogen sulfide can reasonably be expected. These sources include toilets [Parra et al., 1991], sewers [Richardson, 1995; Watt et al., 1997], and liquid manure pits [Osbern and Crapo, 1981; Donham et al., 1982]. Some of these reports describe exposure-related pulmonary injuries that investigators attribute to hydrogen sulfide toxicity. Unfortunately, the absence of air testing data and the presence of confounding factors such as other toxic gases and infectious agents make it difficult to unequivocally ascribe these pulmonary injuries to hydrogen sulfide, although in many cases the data are suggestive.

COMMUNITY EXPOSURE

It is helpful to consider issues of community exposure to hydrogen sulfide in terms of occupational standards for this gas. The acceptable ceiling concentration of hydrogen sulfide permitted in workplace air in the United States is 20 ppm, a level established by the US Occupational Safety and Health Administration (OSHA) [DOL, 1996]. These OSHA regulations do not list an 8-hour time-weighted average (TWA) for hydrogen sulfide, but a TWA of 10 ppm was recommended by the American Conference of Governmental Industrial Hygienists (ACGIH) in 1976 and this recommendation has remained unchanged to the present [ACGIH, 1997]. The ACGIH defines TWA as "the time-weighted average concentration for a conventional 8-hour workday and a 40-hour workweek, to which it is believed that nearly all workers may be repeatedly exposed, day after day, without adverse effect." The justification for this TWA is based on a determination that persons exposed to 10 ppm of hydrogen sulfide will not suffer eye irritation, the most commonly reported adverse physical effect of exposure to hydrogen sulfide at air levels of 50–100 ppm [NRC, 1979].

At air concentrations approaching 0.250–0.300 ppm, the odor of hydrogen sulfide, especially if frequent or persistent, can create a nuisance problem in communities unfortunate enough to be located near a source of this gas. Headache, nausea, and sleep disturbances are quality-of-life issues documented to arise from such exposures [PHS, 1964; Haahtela et al., 1992].

Acceptable air levels for hydrogen sulfide in the workplace environment and acceptable levels for this malodorous gas in the general community air are based on very different considerations. Persons in the workplace are assumed to be in reasonably good health and they generally remain in the workplace environment for only 8 hours a day, 40 hours a week. Community residents comprise all ages and all states of health and may be physically present in the community for most or all of any 24-hour period. They also tend to have a reasonable expectation that their community air will be generally free of noxious substances that create health or nuisance problems. Accordingly, while levels of hydrogen sulfide as high as 10 ppm appear to be acceptable for workplace exposure, community air levels as low as 0.250–0.300 ppm can create an unacceptable nuisance condition. To date, however, neither long-term health effects nor actual physical injury have been convincingly described in persons exposed to hydrogen sulfide at these low levels, although exposure to 0.6 ppm for nearly 1 year is reported to have caused reversible basal ganglia abnormalities in a 1.5-year-old infant, who manifested ataxia and dystonia [Gaitonde et al., 1987].

UTILITY OF LABORATORY TESTING

Biological Monitoring for Chronic Industrial Exposure

The only practical test to monitor the extent of exposure in workers at risk for hydrogen sulfide toxicity, other than fixed or portable air monitoring instruments, is the measurement of urinary thiosulfate. The formation of thiosulfate is the primary detoxification pathway for sulfide in man and is believed to be catalyzed by both hemoglobin and hepatic enzymes [Evans, 1967].

Urinary thiosulfate determinations are not routinely performed in industry, due to the paucity of studies correlating air concentrations with urinary excretion data, as well as the potential complications in interpretation of such data. In one study, 29 unexposed healthy men had urinary thiosulfate values of 0.4–5.4 umol/mmol creatinine, whereas a volunteer exposed to 18 ppm hydrogen sulfide for 30 minutes exhibited urinary thiosulfate concentrations that increased linearly postexposure to a peak of 30 umol/mmol creatinine at 15 hours, before declining to a normal value by 17 hours [Kangas and Savolainen, 1987]. Ingestion of food or water high in sulfur content can dramatically increase urinary thiosulfate concentration, confounding interpretation of excretion data for biological monitoring purposes [Kangas and Savolainen, 1987; Voroteliak et al., 1993; Ellenhorn, 1997].

Diagnosis of Acute Poisoning

Measurement of blood sulfide in acute emergencies is of little clinical value, since this test is rarely available on a STAT basis in clinical laboratories. The delay in obtaining a result from a reference laboratory precludes incorporating blood levels into the diagnostic process. Of more immediate usefulness is a history of possible hydrogen sulfide exposure, as well as the detection of the odor of hydrogen sulfide on the patients clothing or breath. Ancillary tests include chest X-ray to detect pulmonary edema, arterial blood gas determination to rule out carboxyhemoglobinemia or methemoglobinemia, and a CT scan to reveal brain lesions [Ellenhorn, 1997].

Medicological Investigation of Death

The indicia of fatal acute hydrogen sulfide poisoning are fairly well known, but they are not found in every case and their absence by no means precludes establishment of the cause of death as hydrogen sulfide intoxication. These signs include a history of immediate collapse and respiratory paralysis, a disagreeable odor at the accident scene or about the victim, and autopsy findings of pulmonary edema and greenish discoloration of viscera [Simson and Simpson, 1971].

The presence of sulfide ion in blood or major organs at toxic concentrations (usually in excess of 1.0 mg/L or mg/kg) is considered useful corroboration of a diagnosis of sulfide-induced death. Here again, however, there are situations that may result in the artifactual absence or presence of sulfide in biological specimens, obfuscating interpretation of laboratory values. For instance, hydrogen sulfide rapidly disappears from blood during life [Evans, 1967], and it has been shown to either increase or decrease during in vitro storage, depending on the nature of the specimen, storage temperature, and initial sulfide concentration [Nagata et al., 1990]. Sulfide concentrations in blood and tissues such as liver and kidney may increase dramatically due to biodegradation during room-temperature or refrigerated storage.

Refrigeration of bodies during the interval from death to autopsy, frozen storage of specimens in airtight containers until analysis, and the demonstration of potentially lethal levels of sulfide (1–5 mg/L or mg/kg) in blood, lung, and skeletal muscle will provide the best corroboration of a ruling of death due to acute hydrogen sulfide intoxication [Nagata et al., 1990].

REFERENCES

ACGIH (American Conference of Governmental Industrial Hygienists). 1997. TLVs and BEIs. Cincinnati, OH: ACGIH.

Arnold IMF, Dufresne RM, Alleyne BC, Stuart PJW. 1985. Health implications of occupational exposure to hydrogen sulfide. J Occup Med 27:373–376.

Aves CM. 1929. Hydrogen sulphide poisoning in Texas. Texas J Med 24:761–766.

Beauchamp RO Jr, Bus JS, Popp JA, Boreiko CJ, Andjelovich DA. 1984. A critical review of the literature on hydrogen sulfide toxicity. CRC Crit Rev Toxicol 13:25–97.

Bhambhani Y, Burnham R, Snydmiller G, MacLean I, Lovin R. 1996. Effects of 10-ppm hydrogen sulfide inhalation on pulmonary function in healthy men and women. J Occup Environ Med 38:1012–1017.

Burnett WW, King, EG, Grace M, Hall WF. 1977. Hydrogen sulfide poisoning: review of 5 years experience. Can Med Assoc J 117:1277–1280.

DOL (US Department of Labor, Occupational Safety and Health Administration (OSHA)). 1996. Table Z-2. Toxic and hazardous substances. 29 CFR 1910.1000.

Donham KJ, Knapp LW, Monson R, Gustafson K. 1982. Acute toxic exposure to gases from liquid manure. J Occup Med 24:142–145.

Ellenhorn MJ. 1997. Medical toxicology, 2nd ed. Baltimore: Williams & Wilkins.

EPA (US Environmental Protection Agency). 1993. Health assessment document for hydrogen sulfide. Washington, DC: Office of Research and Development, EPA/600/h-86/206F.

Evans CL. 1967. The toxicity of hydrogen sulphide and other sulphides. Q J Exp Physiol 52:231–248.

Gaitonde VB, Sellar, RJ, Ohare AE. 1987. Long term exposure to hydrogen sulphide producing subacute encephalopathy in a child. Br Med J 294:614–615.

Glass DC. 1990. A review of the health effects of hydrogen sulfide exposure. Ann Occup Hyg 34:323–327.

Guidotti TL. 1994. Occupational exposure to hydrogen sulfide in the sour gas industry: Some unresolved issues. Int Arch Environ Health 66:153–160.

Haahtela T, Marttila O, Vilkka V, Jappinen P, Jaakkola JJ. 1992. The South Karelia Air Pollution Study: acute health effects of malodorous sulfur air pollutants released by a pulp mill. Am J Public Health 82:603–605.

Haggard HW. 1925. The toxicology of hydrogen sulphide. J Ind Hyg 7:113–121.

Hessel PA, Herbert FA, Melenka LS, Yoshida K, Nakaza M. 1997. Lung health in relation to hydrogen sulfide exposure in oil and gas workers in Alberta, Canada. Am J Ind Med 31:554–557.

Jappinen P, Vikka V, Marttila, Haahtela T. 1990. Exposure to hydrogen sulphide and respiratory function. Br J Ind Med 47:824–828.

Kangas J, Savolainen H. 1987. Urinary thiosulphate as an indicator of exposure to hydrogen sulphide vapor. Clin Chem Acta 164:7–10.

Kleinfeld M, Giel C, Rosso A. 1964. Acute hydrogen sulfide intoxication: An unusual source of exposure. Ind Med Surg 33:656–660.

Milby TH. 1962. Hydrogen sulfide intoxication. Review of the literature and report of unusual accident resulting in two cases of nonfatal poisoning. J Occup Med 4:431–437.

Nagata T, Kage S, Kimura K, Kudo K, Noda M. 1990. Sulfide concentrations in postmortem mammalian tissues. J Forensic Sci 35:706–712.

Nicholls P. 1975. The effects of sulphide on cytochrome a_3, isosteric and allosteric shifts of the reduced alpha peak. Biochim Biophys Acta 396: 24–35.

NRC (National Research Council). 1979. Hydrogen sulfide. Baltimore: University Park Press.

Osbern LN, Crapo RO. 1981. Dung lung: A report of toxic exposure to liquid manure. Ann Intern Med 95:312–314.

Parra O, Monso E, Gallego M, Morera J. 1991. Inhalation of hydrogen sulphide: A case of subacute manifestations and long term sequelae. Br J Ind Med 48:286–287.

PHS (US Public Health Service). 1964. The air pollution situation in Terre Haute, Indiana, with special reference to the hydrogen sulfide incident of May–June, 1964. Cincinnati, OH: US Dept. of Health, Education and Welfare, Public Health, Division of Air Pollution.

Reiffenstein RJ. 1992. Effects of hydrogen sulfide on humans and animals. Statement prepared for the Public Health Coalition by R.J. Reiffenstein, PhD, Professor of Pharmacology, Department of Pharmacology, University of Alberta, Edmonton, Alberta.

Reiffenstein RJ, Hulbert WC, Roth SH. 1992. Toxicity of hydrogen sulfide. Annu Rev Pharmacol Toxicol 32:109–134.

Richardson DB. 1995. Respiratory effects of chronic hydrogen sulfide exposure. Am J Ind Med 28:99–108.

Simson RE, Simpson GR. 1971. Fatal hydrogen sulphide poisoning associated with industrial waste exposure. Med J Aust 1:331–334.

Smith RP, Gosselin RE. 1979. Hydrogen sulfide poisoning. J Occup Med 21:93–97.

Voroteliak V, Cowley DM, Florin THJ. 1993. Improved colorimetric determination of urinary thiosulfate to study intermediate sulfur metabolism in humans. Clin Chem 39:2533–2534.

Watt MM, Watt SJ, Seaton A. 1997. Episode of toxic gas exposure in sewer workers. Occup Environ Med 54:277–280.

S5

General Affidavit

STATE OF TEXAS

COUNTY OF Jefferson

BEFORE ME, the undersigned Notary, Patricia Grace Kruger, on this 3 day of March, 2009, personally appeared Suzie Mock known to me to be a credible person and of lawful age, who being by me duly sworn, on her oath, deposes and says:

> My name is Suzie Mock. I am over 21 years of age. I was an employee on December 18, 2008 at the Port Arthur Chemical and Environmental Services, LLC ("PACES") plant site at the time Joey Sutter passed away. I have personal knowledge and experience with the situation during the incident involving Joey Sutter. During the morning and afternoon of December 18, 2008 my personal monitor for the H_2S did not sound an alarm warning. My personal H_2S Monitor Alarm was set at 10 ppm for H_2S on December 18, 2008.

Suz Mock
(Signature of Affiant)

Suzie Mock
(Printed Name of Affiant)

2121 Norma St Port Arthur, TX, 77640
(Address of Affiant, Line 1)

(Address of Affiant, Line 2)

STATE OF TEXAS

COUNTY OF Jefferson

Sworn to and subscribed before me on this 3rd day of March, 2009, by _____.

Patricia Grace Kruger
(Notary Public Signature)

SEAL

Patricia Grace Kruger
Notary Public
State of Texas
My Commission Expires
May 29, 2010

S6

Detailed Findings:

Analysis and Comments	Result	Units	Rpt. Limit	Specimen Source	Analysis By
Creatinine	1959	mg/L	5.0	002 - Urine	Colorimetry
Thiosulfate	3.4	mcg/mL	1.0	002 - Urine	IC
Thiosulfate (Creatinine corrected)	1.7	mcg/g Creat	0.51	002 - Urine	IC

Other than the above findings, examination of the specimen(s) submitted did not reveal any positive findings of toxicological significance by procedures outlined in the accompanying Analysis Summary.

Reference Comments:

1. Creatinine - Urine:

   ACGIH Normal range in adults:
   300 - 3400 mg/L (mean: 1000 mg/L)
   [0.3 - 3.4 g/L (mean: 1 g/L)]
   1000 - 1600 mg/day (1.0 - 1.6 g/day).

2. Thiosulfate - Urine:

   Thiosulfate is a byproduct of the metabolic degradation of cysteine and methionine. As a result, normal endogenous levels of thiosulfate can be found in urine. However, whether normal levels of thiosulfate can be found in serum, plasma or whole blood is debatable. Certain environmental exposures, dietary conditions and pathological states can give rise to increased urinary levels of thiosulfate as well as significant concentrations in serum, plasma and/or whole blood. Hydrogen sulfide exposure is a common source of increased urinary and serum levels of thiosulfate.

   Reported endogenous thiosulfate levels in urine range from 1 - 5 mcg/mL.

3. Thiosulfate (Creatinine corrected) - Urine:

   Normal: Up to 8 mcg/g Creatinine.
   15 hours after a 60 minute exposure to air concentrations of 60 micromoles/L Hydrogen Sulfide resulted in urine concentrations up to 60 mcg/g Creatinine.

This analysis was performed under chain of custody after receipt at NMS Labs. The chain of custody documentation is on file at NMS Labs.

Unless alternate arrangements are made by you, the remainder of the submitted specimens will be discarded six (6) weeks from the date of this report; and generated data will be discarded five (5) years from the date of this report.

Analysis Summary:

Acode 4235B - Sulfhemoglobin, Blood

- Analysis by Spectrophotometry (SP) for: Sulfhemoglobin

Acode 4472U - Thiosulfate, Urine

- Analysis by Colorimetry (C) for: Creatinine
- Analysis by Ion Chromatography (IC) for: Thiosulfate, Thiosulfate (Creatinine corrected)

NMS Labs
3701 Welsh Road, PO Box 433A, Willow Grove, PA 19090-0437
Phone: (215) 657-4900 Fax: (215) 657-2972
e-mail: nms@nmslabs.com
Robert A. Middleberg, PhD, DABFT, DABCC-TC, Laboratory Director

CONFIDENTIAL

Toxicology Report

Report Issued 01/20/2009 17:00

To: **10240**
Southeast Texas Forensic Ctr.-Beaumont
Attn: Dr. Tommy Brown
5030 Highway 69 South, Ste.700
Beaumont, TX 77705

Patient Name	SUTTER, JOEY
Patient ID	08-1253
Chain	10973749
Age	Not Given
Gender	Male
Workorder	09009238

FILED
APR 22 2009
Justice Court, Pct. 8

Positive Findings:

Compound	Result	Units	Matrix Source
Creatinine	**1959**	**mg/L**	**Urine**
Thiosulfate	**3.4**	**mcg/mL**	**Urine**
Thiosulfate (Creatinine corrected)	**1.7**	**mcg/g Creat**	**Urine**

See Detailed Findings section for additional information

Specimens Received:

ID	Tube/Container	Volume/ Mass	Collection Date/Time	Matrix Source	Miscellaneous Information
001	Gray Top Tube	10.75 mL	Not Given	Blood	
002	Red Top Tube	9.75 mL	Not Given	Urine	

All sample volumes/weights are approximations.

Specimens received on 01/15/2009.

Testing Requested:

Analysis Code	Description
4235B	Sulfhemoglobin, Blood
4472U	Thiosulfate, Urine

S7

Air Sampling Report U.S. Department of Labor Occupational Safety and Health Administration.

1. Reporting ID	2. Inspection Number	3. Sampling Number
626700	311960975	401326616

4. Establishment Name

PORT ARTHUR CHEMICAL & ENVIRONMENTAL SERVICES

5. CSHO ID	6. Sampling Date	7. Shipping Date	8. Date Result Received
V9900	18 DEC 2008	07 JAN 2009	

9. Job Title	10. Occupational Code	11. Number Exposed
Not applicable		

12. Frequency of Exposure

Exposure Summary

14. Substance Code	15. Rqstd	16. Smpl Type	17. Exp Type	18. Exp Level	19. Units	20. PEL	21. Adj	22. Severity	23. Citation information							
									No Cit	FTA	Over Exp	Eng	PPE	Trng	Med	OTH

TWA calculated on actual time sampled
The I. H. is free to make changes on the Form 91B and submit them directly to IMIS

26. Analyst's Comments (Analytical Method) HISTORICAL GC/MS

A portion of bulk oil was placed in carbon disulfide for analysis by GC/mass spectrometry. Testing for pH was done by placing a portion of oil in water, then testing the water with pH indicator strips. Testing for H2S and SO2 in bottle headspace was done using detector tubes.

D-55599: Most abundant organic analytes were phenol, cresols d other alkyl phenols. Also found were numerous sulfides, isulfides, trisulfides, and tetrasulfides, as well as toluene, xylene, and elemental sulfur. Indicator strips gave an approximate pH of 6. H2S and SO2 were not detected in headspace over the oil.

27. Chain of Custody	Init.	Date Y
a. Seals Intact		
b. Rec'd In Lab	DJK	21 JAN 2009
c. Rec'd by Anal.	PH	22 JAN 2009
d. Anal. Completed	PH	23 JAN 2009
e. Calc. Checked	MEE	23 JAN 2009
f. Supr. OK'd	WP	26 JAN 2009

28 Submission number 1975-3

29 Lab Sample No. (Minutes/Type) D55599 B

30. Analyte	31. Analysis Results/ 32. Sample included in calculations of
M125 Qualitative Mass-Spec Analysis	BULK

Because the results for air samples are used in further calculations, the number of figures reported in section 31 may not reflect the actual precision of the analysis. Calculated confidence limits (UCL & LCL) should be rounded to no more than three significant figures.
The precision of analysis for wipe samples and for bulk material samples justify rounding results to no more than two significant figures.

The Sampling and Analytical Error (SAE) is the current value for the specific chemical(s) and should be used for the calculations.
Blank values are reported for reference only. Appropriate blank corrections have been applied to the samples by the Salt Lake Technical Center. Blank results are less than the reporting limit(s) unless otherwise noted.

33. Analyte Code SAE Value

M125

.	MILLIGRAMS PER LITER (URINE)	D	MICROGRAMS PER DECILITER (BLOOD)
:	PICO CURIES PER LITER (RADON GAS)	P	PARTS PER MILLION
'	FIBERS PER CUBIC CENTIMETER	X	MICROGRAMS
!	MILLIGRAMS PER CUBIC METER	%	PERCENT

S8

Air Sampling Report U.S. Department of Labor Occupational Safety and Health Administration.

1. Reporting ID	2. Inspection Number	3. Sampling Number
626700	311960975	401326616

4. Establishment Name

PORT ARTHUR CHEMICAL & ENVIRONMENTAL SERVICES

5. CSHO ID	6. Sampling Date	7. Shipping Date	8. Date Result Received
V9900	18 DEC 2008	07 JAN 2009	

9. Job Title	10. Occupational Code	11. Number Exposed
Not applicable		

12. Frequency of Exposure

Exposure Summary

14. Substance Code	15. Eqstd	16. Smpl Type	17. Exp Type	18. Exp Level	19. Units	20. PEL	21. Adj	22. Severity	23. Citation information: No Cit	FTA	Over Exp	Eng	PPE	Trng	Med	OTH

WA calculated on actual time sampled
he I. H. is free to make changes on the Form 91B and submit them directly to IMIS

26. Analyst's Comments (Analytical Method) HISTORICAL GC/MS

A portion of bulk oil was placed in carbon disulfide for analysis by GC/mass spectrometry. Testing for pH was done by placing a portion of oil in water, then testing the water with pH indicator strips. Testing for H2S and SO2 in bottle headspace was done using detector tubes.

D-55599: Most abundant organic analytes were phenol, cresols and other alkyl phenols. Also found were numerous sulfides, disulfides, trisulfides, and tetrasulfides, as well as toluene, xylene, and elemental sulfur. Indicator strips gave an approximate pH of 6. H2S and SO2 were not detected in headspace over the oil.

27. Chain of Custody	Init.	Date
a. Seals Intact		Y
b. Rec'd In Lab	DJK	21 JAN 2009
c. Rec'd by Anal.	PH	22 JAN 2009
d. Anal. Completed	PH	23 JAN 2009
e. Calc. Checked	MEE	23 JAN 2009
f. Supr. OK'd	WP	26 JAN 2009

Submission Number 1975-3

Lab Sample No. D55599
(Minutes/Type) B

30. Analyte	31. Analysis Results/ 32. Sample included in calculations of
M125 Qualitative Mass-Spec Analysis	BULK

Because the results for air samples are used in further calculations, the number of figures reported in section 31 may not reflect the actual precision of the analysis. Calculated confidence limits (UCL & LCL) should be rounded to no more than three significant figures.
The precision of analysis for wipe samples and for bulk material samples justify rounding results to no more than two significant figures.

The Sampling and Analytical Error (SAE) is the current value for the specific chemical(s) and should be used for the calculations.
Blank values are reported for reference only. Appropriate blank corrections have been applied to the samples by the Salt Lake Technical Center. Blank results are less than the reporting limit(s) unless otherwise noted.

Analyte Code	SAE Value
M125	

MILLIGRAMS PER LITER (URINE)	D	MICROGRAMS PER DECILITER (BLOOD)
PICO CURIES PER LITER (RADON GAS)	P	PARTS PER MILLION
FIBERS PER CUBIC CENTIMETER	X	MICROGRAMS
MILLIGRAMS PER CUBIC METER	%	PERCENT

Sampling Number: 401326616

Air Sampling Report U.S. Department of Labor Occupational Safety and Health Administration.

1. Reporting ID	2. Inspection Number	3. Sampling Number
626700	311960975	401326608

4. Establishment Name

PORT ARTHUR CHEMICAL & ENVIRONMENTAL SERVICES

5. CSHO ID	6. Sampling Date	7. Shipping Date	8. Date Result Received
V9900	18 DEC 2008	07 JAN 2009	

9. Job Title	10. Occupational Code	11. Number Exposed
Not applicable		

12. Frequency of Exposure

Exposure Summary

14. Substance Code	15. Rqstd	16. Smpl Type	17. Exp Type	18. Exp Level	19. Units	20. PEL	21. Adj	22. Severity	23. Citation information							
									No Cit	FTA	Over Exp	Eng	PPE	Trng	Mad	OTH

TWA calculated on actual time sampled
The I. H. is free to make changes on the Form 91B and submit them directly to IMIS

26. Analyst's Comments (Analytical Method) GC/MS ANALYSIS

Air from the closed bag was drawn through a Carbotrap 300 tube for volatiles analysis. Swatches of cloth were cut from sweat pants (2), shirt (3), and jeans (2) and extracted in carbon disulfide for GC/MS analysis. Draeger tube analysis for hydrogen sulfide and mercaptans was conducted. Swatches from shirt and jeans were extracted in water, which was tested with pH strips.

-55438: HazMat suit was not analyzed.

D-55439: Carbotrap tube: Numerous disulfide compounds including CS2, dimethyl disulfide, diethyl disulfide, dimethyl trisulfide, diethyl trisulfide, and others. Also, acetone, isopropanol, ethyl benzene, xylene, and 2-ethyl hexanol. Sweat pants: Dimethyl disulfide, fatty acids, glycerin, and long-chain alcohols and amines. Shirt: Elemental sulfur, phthalate and adipate esters, phenol and alkyl phenols, nonyl phenol isomers, alkyl cyclopentadienes, fatty acids, alcohols and amines, dimethyl disulfide, benzyl alcohol, and detergent compounds. Jeans: Elemental sulfur, phenol and alkyl phenols, alkyl cyclopentadienes, disulfide compounds, phthalate and adipate esters, and detergent compounds. Draeger tubes produced no evidence of hydrogen sulfide or mercaptans. pH on cloth swatches tested was not elevated, indicating absence of caustics such as NaOH.

27. Chain of Custody	Init.	Date
a. Seals Intact		Y
b. Rec'd In Lab	DJK	14 JAN 2009
c. Rec'd by Anal.	PH	14 JAN 2009
d. Anal. Completed	PH	21 JAN 2009
e. Calc. Checked	MEE	31 JAN 2009
f. Supr. OK'd	WP	22 JAN 2009

28 Submission number	1975-1	1975-2
29 Lab Sample No. (Minutes/Type)	D55438 B	D55439 B

30. Analyte	31. Analysis Results/	32. Sample included in calculations of
M125 Qualitative Mass-Spec Analysis	NA	BULK

S9

NMS LABS

FILED
APR 22 2009
Justice Court, Pct. 8

March 25, 2009

Southeast Texas Forensic Ctr. - Beaumont
Attn.: Michele Bertrand
5030 Highway 69 South, Ste. 700
Beaumont, TX 77705

Re: ***SUTTER, JOEY (Patient ID 08-1253)***
NMS File Nos.: WO# 09049978 and 09-0123

Dear Ms. Bertrand:

You have requested that I provide a report discussing my opinions and conclusions regarding Mr. Joey Sutter's toxicology result as detailed in the report issued by NMS Labs on March 16, 2009. Specifically, you would like to know about the thiosulfate finding in blood and its meaning.

Per my understanding Mr. Sutter was a contract employee who was working at a site where there was a wastewater container storing hydrogen sulfide (H_2S). A decision was made to boil off its contents and, at some point, Mr. Sutter opened the dome lid. Following this action Mr. Sutter gasped twice and collapsed, and blood was seen to be gushing from his nose. Despite rescue efforts Mr. Sutter could not be revived. Subsequent testing performed on his clothing revealed the presence of multiple sulfides. Finally, thiosulfate, a metabolite of sulfide, was found at a concentration of 11 mcg/mL in cardiac blood.

By comparing Mr. Sutter's thiosulfate concentration with the concentrations listed in the table below, in conjunction with the review of other case histories, it is seen that Mr. Sutter's concentration is consistent with other thiosulfate concentrations that have been reported in hydrogen sulfide fatal case outcomes.

As a point of reference, whole blood thiosulfate concentrations in healthy persons are normally less then 0.3 mcg/mL.

NMS LABS

Based upon the above information in conjunction with my knowledge, training and experience, it is my opinion that:

The thiosulfate concentration determined in Mr. Sutter's blood sample is consistent with other reported postmorten thiosulfate concentrations where the cause of death was attributed to hydrogen sulfide poisoning.

If you have any questions regarding this report please do not hesitate to contact me. Also, in the event additional information becomes available, that may affect the above opinion and conclusion, please forward such to me for evaluation.

Laura M. Labay, Ph.D., DABFT
Forensic Toxicologist

REFERENCES

1. Kage, S., et al. Fatal and Nonfatal Poisoning by Hydrogen Sulfide at an Industrial Waste Site. J Forensic Sci 2002; 47 (3): 652-655.

2. Kage, S., et al. A Fatal Case of Hydrogen Sulfide Poisoning in a Geothermal Power Plant. J Forensic Sci 1998; 43 (4): 908-910.

3. Ago, M., et al. Two Fatalities by Hydrogen Sulfide Poisoning: Variation of Pathological and Toxicological Findings. Legal Medicine 10 (2008) 248-152.

4. Kage, S., et al. The Usefulness of Thiosulfate as an Indicator of Hydrogen Sulfide Poisoning: Three Cases. Int J Legal Med (1997) 110: 220-222.

NMS LABS

CASE HISTORY	THIOSULFATE CONCENTRATION
Reference 1: A man (A) enters a pit at an industrial waste site and suddenly loses consciousness. Three colleagues (B, C and D) enter the pit to attempt rescue. All lose consciousness. Workers A and B die soon after arrival at the hospital. Blood was collected at the time of the autopsies, 7 hours after the accident for Worker A and 8 hours after the accident for Worker B.	Worker A Blood: 10.53 mcg/mL Worker B Blood: 4.59 mcg/mL
Reference 2: A man enters an oil separator room in a geothermal power plant. He suddenly collapses and dies soon thereafter. The body was kept at 0°C until the autopsy was performed 20 hours after death. Blood was collected at the time of autopsy.	Blood: 16 mcg/mL
Reference 3: Several workers enter a water ballast tank to remove heavy oil and suddenly feel unwell. Two of the workers (A and B) arrive at a hospital in cardiopulmonary arrest and soon thereafter are pronounced dead. Autopsies on Worker A and Worker B were performed at 20 and 24 hours post-death, respectively.	Worker A Blood: 9.9 mcg/mL Worker B Blood: 15 mcg/mL
Reference 4: A worker enters a tank to remove sludge, suddenly collapses and dies soon after. The body was kept at room temperature until the autopsy was performed 22 hours post-death. Blood was collected at the time of autopsy.	Blood: 2.7 mcg/mL
Reference 4: Two workers (A and B) enter a pump room to repair a pump. When a check valve is opened Hydrogen Sulfide is smelled. Worker B leaves to get a ventilator and when Worker B returns, Worker A is found lying beneath a pool of sewage and died soon thereafter. The body was kept at 0°C until the autopsy was performed 24 hours after death. Blood samples were collected 4 hours after death and at the time of autopsy.	Worker A Blood (4 hr): 13 mcg/mL Blood (Autopsy): 13 mcg/mL

F4

General Affidavit

STATE OF TEXAS

COUNTY OF Jefferson

BEFORE ME, the undersigned Notary, Patricia Grace Kruger, on this 3 day of March, 2009, personally appeared Brian Weathers known to me to be a credible person and of lawful age, who being by me duly sworn, on his oath, deposes and says:

My name is Brian Weathers. I am over 21 years of age. I was the Supervisor on December 17, 2008 and on December 18, 2008 at the Port Arthur Chemical and Environmental Services, LLC ("PACES") plant site at the time Joey Sutter passed away. I have personal knowledge and experience with the PACES' personal H_2S Monitoring Equipment and Sampling of Trailers. During of December 17, 2008 my H_2S alarm at PACES did not sound an alarm warning when I obtained a sample from Trailer 267. H_2S Monitor was set at 10 ppm H_2S to alarm on December 17, 2008 when I sampled the Trailer 267.

Brian Weathers
(Signature of Affiant)

Brian Weathers
(Printed Name of Affiant)

7803 Twelfth Fairway Humble TX 77346
(Address of Affiant, Line 1)

(Address of Affiant, Line 2)

STATE OF TEXAS

COUNTY OF Jefferson

Sworn to and subscribed before me on this 3 day of March, 2009,

by _____.

SEAL

Patricia Grace Kruger
Notary Public
State of Texas
My Commission Expires
May 29, 2010

Patricia Grace Kruger
(Notary Public Signature)

F6

DEPARTMENT OF HEALTH AND HUMAN SERVICES • NATIONAL INSTITUTES OF HEALTH

Calculate Your Body Mass Index

National Heart Lung and Blood Institute • Obesity Education Initiative

Healthy Weight Home | Menu Planner | Portion Distortion | WeCan!

Body mass index (BMI) is a measure of body fat based on height and weight that applies to both **adult** men and women.

- Enter your weight and height using Standard or Metric measures.
- Click on "Compute BMI" and your BMI will appear in the heart of the figure.

Español

STANDARD | METRIC

Your Height: 6 (feet) 2 (inches)

Your Weight: 255 (pounds)

Compute BMI

Your BMI: 32.7

BMI Categories:

- Underweight = <18.5
- Normal weight = 18.5-24.9
- Overweight = 25-29.9
- Obesity = BMI of 30 or greater

The BMI Tables

Aim for a Healthy Weight:

- Assessing Your Risk
- Limitations of the BMI
- Controlling Your Weight
- Recipes

Note: If this does not work with your browser or for a text alternative to this page, go to our CGI based BMI Calculator

NMS Labs
3701 Welsh Road, PO Box 433A, Willow Grove, PA 19090-0437
Phone: (215) 657-4900 Fax: (215) 657-2972
e-mail: nms@nmslabs.com
Robert A. Middleberg, PhD, DABFT, DABCC-TC, Laboratory Director

CONFIDENTIAL

Toxicology Report

Report Issued 01/03/2009 11:00

To: **10240**
Southeast Texas Forensic Ctr.-Beaumont
Attn: Dr. Tommy Brown
5030 Highway 69 South, Ste.700
Beaumont, TX 77705

Patient Name	SUTTER, JOEY
Patient ID	08-1253
Chain	10973687
Age	36 Y
Gender	Male
Workorder	08361311

FILED
APR 22 2009
Justice Court, Pct. 8

Positive Findings:

Compound	Result	Units	Matrix Source
Caffeine	**Positive**	**mcg/mL**	**Blood**
Cotinine	**Positive**	**ng/mL**	**Blood**
Nicotine	**Positive**	**ng/mL**	**Blood**
Theobromine	**Positive**	**mcg/mL**	**Blood**
Acetaminophen	**4.6**	**mcg/mL**	**Blood**

See Detailed Findings section for additional information

Specimens Received:

ID	Tube/Container	Volume/ Mass	Collection Date/Time	Matrix Source	Miscellaneous Information
001	Gray Top Tube	10.75 mL	12/19/2008	Blood	

All sample volumes/weights are approximations.

Specimens received on 12/30/2008.

Testing Requested:

Analysis Code	Description
8052B	Postmortem Toxicology - Expanded, Blood

F7

FDID *	State *	MM	DD	YYYY	Station	Incident Number *	Exposure *	Complete Narrative
NH715	TX	12	18	2008	2	08-0012882	000	

Narrative:

<<Logs>> 14:11:03 00005150 : sc enrte ; 14:14:36 00005062 : PER 5014 CALL BACK ADVISED FULL REST/E2 EMS ADVISED ; 14:19:30 00005062 : E2 1410 1419 ; 14:19:54 00005062 : RETONE ; 14:20:17 00005062 : W2 REQUEST R1 ASSIST ; 14:21:44 00005062 : TURN AT TALON'S/ENVIRONMENTAL//RD BEFORE IC BRIDGE ST COM ON RIGHT DOWN DIRT RD ; 14:28:08 00005145 : e2-heavy set man ontop of the tanker ; 14:30:06 00005145 : bringing him down now ; 14:33:23 00005145 : hr1 has a firefighter riding with ems to hospital enroute to pick him up ////st mary ; 14:45:56 00005145 : e2 to st marys to give information ; 14:56:51 00005145 : e2 at st mary ; 15:03:45 00005145 : told unit 3 to call the chief the hospital is treating this as a hazmat incident ; 15:19:40 00005145 : e2 leaving st mary going back to scene ; 15:31:04 00005145 : hr1 toned out of service ; 15:32:18 00005145 : e2 back on the csene ; 16:04:51 00005145 : msds is non toxic ; 16:07:20 00005145 : e2 back in service going to station ; 16:14:27 00005145 : ernout to st mary hospital ; 16:23:31 00005145 : at st mary again ; 16:45:03 00005145 : Incident Closed ;

On 12/18/2008 at 14:10:33 dispatched To 2420 S Gulfway DR /PORT ARTHUR, TX 77640. The location is a Warehouse. The incident was determined to be a(n) EMS call, excluding vehicle accident with injury.

14:19:20 arrived on scene.
The following actions were performed on scene:
Extricate, disentangle
Provide advanced life support (ALS)

Units responding were:
t E2 responded.
Unit HR1 responded.
Unit SC63 responded.

16:45:03 all units back in service.

Dispatched to difficulty breathing. While enroute the call was upgraded to a full arrest. AOSTF patient on top of a tanker. Company emloyees had begun cpr. Fire engineer Barideaux and fire fighter Delacerda climbed on top of tanker and took over cpr. Captain Peake directed resources needed for the retrieval of patient from atop the tanker. Company employee made mention that the patient may have been exposed to toxic fumes. FD backboarded the patient and lowered the patient to the ground and onto waiting Stat Care ems stretcher. Fire fighter Thibedeaux rode with patient to SMH to assist ems.
HR1 went to SMH while E2 gathered patient info. E2 went to SMH and found hospital doing a hazmat wash on patient. E2 returned to scene to take drager readings from top of tanker. Drager read 1 ppm of H2S. Obtained msds sheet on tanker contents. Msds showed chemical to be sulfurized isobutylene. Toxicological Data showed all areas to be: Practically non-toxic. E2 returned to SMH msds sheet for distribution to the hospital and JP. E2 returned to service.

HR-1 Supplement:

HR-1 responded to assist. FF Thibodeaux rode in with EMS to St. Mary. Upon arrival the EMS s f complained of a strong odor from the pt. and his clothing. Hospital staff removed clothing and placed into a biohazard bag. FD placed a meter in the bag. The meter detected no lel, no H2S, no CO, and indicated an O2 % of 20.9. The deceased was placed in a secure room ouitside of the ER. FF Thibodeaux was provided with scrubs from the hospital and was

F13

Accutest Laboratories

Report of Analysis

Client Sample ID:	NUI		
Lab Sample ID:	T27869-1	Date Sampled:	04/15/09
Matrix:	AQ - Water	Date Received:	04/24/09
		Percent Solids:	n/a
Project:	CES		

General Chemistry

Analyte	Result	MQL	SDL	Units	DF	Analyzed	By	Method
Hydroxide Alkalinity	0.0300	5.0	0.66	mg/l	1	04/29/09 15:00	MC	SM18 4500CO2D
Sulfide	0.15 U	8.0	0.15	mg/l	1	04/29/09 13:00	KD	SM 4500S+F

MQL = Method Quantitation Limit
SDL = Sample Detection Limit

U = Indicates a result < SDL
B = Indicates a result > = SDL but < MQL

F14

DEPARTMENT OF HEALTH AND HUMAN SERVICES • NATIONAL INSTITUTES OF HEALTH

Calculate Your Body Mass Index

National **Heart Lung and Blood** Institute • Obesity Education Initiative

Healthy Weight Home **Menu Planner** **Portion Distortion** **WeCan!**

Body mass index (BMI) is a measure of body fat based on height and weight that applies to both **adult** men and women.

- Enter your weight and height using Standard or Metric measures.
- Click on "Compute BMI" and your BMI will appear in the heart of the figure.

Español

STANDARD **METRIC**

Your Height: 5 (feet) 11 (inches)

Your Weight: 196 (pounds)

Compute BMI

Your BMI: 27.3

BMI Categories:

- Underweight = <18.5
- Normal weight = 18.5-24.9
- Overweight = 25-29.9
- Obesity = BMI of 30 or greater

The BMI Tables

Aim for a Healthy Weight:

- **Assessing Your Risk**
- **Limitations of the BMI**
- **Controlling Your Weight**
- **Recipes**

Note: If this does not work with your browser or for a text alternative to this page, go to our CGI based BMI Calculator

---

Healthy Weight Home · Menu Planner · Portion Distortion · WeCan!
Professional Education Materials · Patient and Public Education Materials

NHLBI Home · OEI Home · NHLBI Privacy Statement · Contact the NHLBI · Accessibility

EPAPA011000224

Texas Department of Transportation
Form MCD-106
(Rev. 4/08)
(GSD-EPC)
Page 1 of 1

General Permit Facsimile Application
Motor Carrier Division

Order your permit online at www.txdot.gov.

This application must be filled out in its entirety prior to a permit being issued

Fax Application to: 512/465-3565

Ordered By	Wire Service?	Phone Number	Company Fax Number
Steve Stricker	☐ Yes ☐ No	281-433-7052	409-984-5558

Payment Method	Credit Card Exp:	Customer E-mail Address
☒ Credit Card ☐ PAC ☐ Escrow Account Number: 4919 8602 9360 4608	11/11	SStricker@CES Environmental.com

Customer Account Number	Company Name		Bond on File / TxDOT (MCR #) / UCR Fees Paid		
209137	CES Environmental				
	Company Address		City	State	Zip
	4904 Griggs Rd		Houston.	TX	77021

Load Description*	Temporary Registration (choose one) ☐ 72-Hour ☐ 144-Hour ☒ Single-trip ($5) Start Date & Time (required for all temporary registration) 7-24-09 - 10:00
Portable building	

Maximum Width	Maximum Height	Maximum Length	Front Overhang	Rear Overhang	Gross Weight
10'	15'4"	60'	—	—	Legal

Truck Year/Make	VIN	**License Number	State
2000 FORD	1FDWT36F5YEA36895	R87983	TX
Trailer Year/Make	**VIN**	**License Number**	**State**
2000 American	17YGN4023YB020957	W19908	TX

**Truck has temporary registration for Texas ☐ or Truck has T.O.A. ☐ State: and expiration date:

	1	2	3	4	5	6	7	8	9	10	11	12	13	14
Axle Spacing														
Weights (x 1000)														
Number of Tires														
Tire Tread Width														

Starting Town & State-Maintained Intersection:	Ending Town & State-Maintained Intersection:
Houston, TX - I-610 + MLK Blvd.	Pt. Arthur TX. Hwy 87 + Hwy 82

Route 4904 Griggs Rd to MLK Blvd. - MLK south to I-610 - 610 East + North to I-10. I-10 to Hwy 73 to Hwy 82 to Hwy 87. Hwy 87 to 2420 S. Gulfway.

*** Is this load on a lowboy type trailer?** ☐ Yes ☒ No
If you answered "Yes" to the question above, is the trailer equipped with a hydraulic lift? ☐ Yes ☒ No
If you answered "Yes" to the question above, what is the "traveling" ground clearance of the trailer (in inches)?
If your load is a self-propelled (S/P) unit, do you want TxDOT to charge you mileage? ☐ Yes ☐ No
Note: Any S/P unit licensed with a "P" permit plate MUST be charged mileage.

Movement to begin no earlier than (date):	Movement to be completed by (date):
7-24-09	7-24-09

The Texas Department of Transportation maintains the information collected on this form. With a few exceptions, you are entitled upon request to be informed about the information that we collect about you. Under §§552.021, 552.023 and 559.004 of the Texas Government Code, you are entitled to receive and review this information, and to have us correct erroneous information.

For more information, visit our Web site at www.txdot.gov. For questions or complaints concerning the application process for oversize/overweight permits, call 800/299-1700 or write to: TxDOT-MCD, 125 East 11th Street, Austin, Texas 78701.

FAX# 84099845558

Texas Oversize/Overweight Single Trip Permit and/or Temporary Registration

Name:	CES Environmental Services	**Permit Number:**	090723518115
Address:	4904 Griggs Rd Houston, TX. 77021	**Issued On :**	07/23/2009 **Time:** 07:11:33
		Effective :	07/24/2009
Account:	209137 **Phone:** 2814337052	**Expiration :**	07/28/2009
Applicant:	STEVE	**Permit Officer :**	Patridge, Theresa

Load Description: PORTABLE BUILDING **Gross Weight:** Legal

Max. Width: 10' **Max Height:** 15' 4" **Max. Length:** 60' **ROH:** Legal **FOH:** Legal

Axle:
Distances:
Weights:
# of Tires:
Tire Sizes:

Truck:	**Trailer:**	**Temporary Registration**	
2000 / Ford		**Truck**	**Trailer**
36895		**Start:**	**Start:**
R87983 / TX		**End:**	**End:**

Route Description: **Starting City:** HOUSTON **Ending City:** PORT ARTHUR

..JCT DIXIE DR/SH35s, HOUSTON-S.BW8SFRe, IH45.WFRs, @SCARSDALE/HOUSTON: FM2553ne, SH3n, HOUSTON-S.BW8FRe/n, SH225e, SH146n, BAYTOWN: SP330nw, IH10e, SH146n, US90e, FM365s,e, PORT ARTHUR AREA-SP93s, SH73e,n, SP215s, SH87n..JCT US69

NOT LWBY
TxDOT Number: Status: Active 005516524C

Special Conditions:

Use caution at all railroad crossings. Railroad crossing hotline: 1-888-877-7267.
Permit is valid for one trip only. Not valid without movement conditions sheet attached.
Escorts: Over 14' wide, or 110' long = one escort. Over 16' wide, or 125' long = two escorts.
Over 17' high = front escort with height pole. Over 18' high = front escort with height pole and rear escort.
If the load is over two dimensions that require escorts, then front and rear escorts are required.
A rear escort is required when the front or rear overhang exceeds 20'. When one escort is required, escort should be in front on a two lane hwy and in rear on a multi-lane highway. Only overweight/overlength loads may travel IH35 inside travel lane in Austin.
Self-propelled oil well servicing units that do not exceed 9' wide, 14' high, or 65' long are allowed night movement.
All loads exceeding 8'6" wide and/or 13'6"high may not travel on the main lanes of IH35 between US183/SH71 in Austin.
El Paso District: Over 17'6" high= front escort with height pole.
Odessa, San Angelo & Abilene Districts: Over 16' wide= one escort. Over 18' wide= front & rear escorts.
Odessa, San Angelo & Abilene Districts: 16' wide & 95' long combination = front & rear escorts. Over 18' high =front escort with height pole.
Lubbock District-Gaines & Dawson Counties only: Over 16' wide= one escort. Over 18' wide= front & rear escorts.
Lubbock District-Gaines & Dawson Counties only: 16' wide & 95' long combination = front & rear escorts. Over 18' high =front escort with height pole.

Amadeo Saenz Jr.
Amadeo Saenz Jr., P.E., Executive Director
Texas Department of Transportation

Payment Method :	Credit Card	**Permit Fee:**	$30.00
Trace # :	694187	**Registration Fee:**	$0.00
Wire Co. Name:		**Overweight Fee:**	$0.00
Permit Destination:	Houston, TX.	**Other Fee:**	$31.00
Amendments :		**Total Fee:**	$61.00

State law requires permit to be carried in vehicle until one day after expiration.
For more information, call the Texas "One Stop Shop" toll free number at 1-800-299-1700 or visit our website at www.txdot.gov .

Permit Movement Conditions and Curfews

1. Permittee must adhere to described route (if applicable).
2. Vehicles permitted may travel through any hwy construction or maintenance area provided they adhere to the restrictions and limitations posted by the Department at www.txdot.gov.
3. Loads not exceeding 10' wide or 100' long with legal front and rear overhang may travel at night on the Interstate Hwy. System only. Escorts not required. Loads are restricted to 14' wide, 16' high, 110' long on the six major holidays.
4. When one escort is required, escort should be in front on a two lane highway and in rear on a multi-lane highway.
5. Daylight Movement only unless otherwise specified. Overweight only may move at night.
6. Overlength loads: up to 150' long,legal width&legal height may convoy in groups of 4 w/front&rear escorts. Up to 180' long,legal width&legal height may convoy in groups of 2 w/front& rear escorts. Loads may not travel <1000' apart.
7. Movement of a permitted vehicle is prohibited when the road surface is hazardous due to rain, ice, sleet, snow, wind, or highway maintenance/construction work (see second statement) or when visibility is less than 2/10 of one mile.
8. It is the responsibility of the permittee to clear any overhead obstruction or utility line. In addtion, all utility companies or other entities must be contacted in advance, as required by the utility or entity, to assist in clearing the obstruction. Loads must use designated truck routes in: Andrews, Crane, & Kermit.
9. It is expressly understood that The Texas Department of Transportation shall not be responsible in any way for any damage of whatever nature that may result from the movement of the described vehicle and load over Texas highways, and that all such responsibility is hereby accepted on behalf of the applicant.
10. The oversized and/or overweight permit is issued on the condition that the applicant will comply with all laws and rules relating to the movement of oversized and/or overweight vehicles and/or equipment on Texas highways. Violations of any laws or rules formally adopted by the Texas Department of Transportation regarding the movement of oversized and/or overweight vehicles and/or equipment may subject the applicant to being cited for violation of Texas size and weight laws. This permit does not authorize the vehicle(s) to exceed the manufacturer's tire load rating FMCSR Section 393.75f

City	Curfew Movement Restriction	Time	Days
Austin	Over 12' wide or 95' long	7-9 a.m. & 4-6 p.m.	M-F
Bandera SH173/SH16	All permit loads (Sept.-May)	7-9 a.m. & 3-5 p.m.	M-F
Beaumont & Vidor	All permit loads including IH10 between Beaumont & Vidor	7-9 a.m. & 4-6 p.m.	M-F
Carrizo Springs	All permit loads (Sept.-May)	3-4 p.m.	M-F
Dallas	Overwidth loads may not travel inside LP12	7-9 a.m. & 4-6 p.m.	M-F
Dallas County	Over 12' wide or 95' long	7-9 a.m. & 4-6 p.m.	M-F
Dallas: IH635	Over 12' wide or 95' long from IH35E to IH30	7-9 a.m. & 3-7 p.m.	M-F
Denton/Lewisville	Over 12' wide or 95' long	7-9 a.m. & 4-6 p.m.	M-F
El Paso	Over 12' wide or 95' long	7-9 a.m. & 4-6 p.m.	M-F
Forney FM740	All permit loads from IH20 to US80	7-9:30 a.m. & 2-4:30 p.m.	M-F
Hallettsville-US77/90A*	All permit loads (August-May)	7:30-8:15 a.m. & 3-3:45 p.m.	M-F
Hooks-New Boston	No loads over 14' wide on US82	6-8 a.m. & 3-5 p.m.	All Days
Houston (city limits)*	All permit loads	6-9 a.m. & 4-7 p.m.	M-F
Jasper	Over 16' wide	7:30-8:30 a.m. & 3-4 p.m.	M-F
Karnack: SH43	Over 14' wide from US59 to LP449	6-8 a.m. & 3-5 p.m.	All Days
Kerrville: SH27/SH16	No permit loads: SH27 from FM783 to LP534&SH16 from SH27 to LP534	7-8:15 a.m.,11:30-1:15 p.m.,3:30-5:30 p.m.	M-F
Lubbock*	All permit loads	7-9 a.m. & 4-6 p.m.	M-F
San Angelo	Over 12' wide or 95' long	7-9 a.m. & 4-6 p.m.	M-F
San Antonio*	No permit loads on or inside LP1604	7-9 a.m. & 4-6 p.m.	M-F
Tarrant County*	All permit loads (self-propelled mobile cranes exempt)	7-9 a.m. & 4-6 p.m.	M-F
Texarkana	All permit loads over 12' wide	7-9 a.m. & 4-6 p.m.	M-F
Waco: FM1695	Over 10' wide from US84 to FM2063	7:30-8:15a.m. & 4:45-5:30 p.m.	M-F
Waco: FM3051	Over 10' wide from BU77 to FM1637	7:30-8:15 a.m & 4:45-5:30 p.m.	M-F
Waco: FM3223	No width from SH6 to FM1695	7:30-8:15a.m. & 4:45-5:30 p.m.	M-F
Waco: IH35	Over 10' wide from SH6 to N.LP340	7:30-8:15a.m. & 4:45-5:30 p.m.	M-F
Waco: IH35	No permit loads over 12' wide from 3.25 miles n. of FM107n, to S.LP340	8 p.m.- 7 a.m.	Su-Th
Waco: US77	Over 10' wide from BU77s to FM3148	7:30-8:15 a.m. & 4:45-5:30 p.m.	M-F
Waco:IH35 Frontage Rd	No permits from N. US77 to FM308	7-8 a.m.	M-F
Weatherford	No permit loads over 120' long and/or 254,000 lbs GVW	7-9 a.m. & 4-6 p.m.	M-F
Whitehouse-SH110	All permit loads Aug.15th-June5th	7-8:30 a.m. & 2-3:30 p.m.	M-F
Wichita Falls	Over 12' wide or 95' long	7-9 a.m. & 4-6 p.m.	M-F

***Permit loads that are overweight only are exempt from curfew.**
For more information, visit our website at www.txdot.gov . For questions or complaints concerning the applicant process for permits, call 1-800-299-1700 or write to: TxDOT-MCD, 125 E.11th Street, Austin, TX. 78701

GUIDELINES

FOR THE

CLASSIFICATION

AND

CODING

OF

INDUSTRIAL

AND

HAZARDOUS WASTES

TEXAS COMMISSION ON
ENVIRONMENTAL QUALITY

WASTE PERMITS DIVISION

RG-022 Revised 2/05

EPAPA011000228

GUIDELINES FOR THE CLASSIFICATION AND CODING OF INDUSTRIAL AND HAZARDOUS WASTES

THIS IS A GUIDANCE DOCUMENT AND SHOULD NOT BE INTERPRETED AS A REPLACEMENT TO THE RULES.

The rules for classifying and coding industrial wastes and hazardous wastes may be found in 30 Texas Administrative Code (TAC) Sections (§§) 335.501-.521 (Subchapter R).

Prepared by:

I&HW Permits Section, MC 130
Waste Permits Division
Texas Commission on Environmental Quality
P.O. Box 13087
Austin, Texas 78711-3087

RG-022
Texas Commission on Environmental Quality

Revised February 2005

TCEQ

Kathleen Hartnett White, *Chairman*
R. B. "Ralph" Marquez, *Commissioner*
Larry R. Soward, *Commissioner*

Glenn Shankle, *Executive Director*

Authorization for use or reproduction of any original material contained in this publication—that is, not obtained from other sources—is freely granted. The commission would appreciate acknowledgment.

Copies of this publication are available for public use through the Texas State Library, other state depository libraries, and the TCEQ Library, in compliance with state depository law. For more information on TCEQ publications call 512/239-0028 or visit our Web site at:

http://www.tceq.state.tx.us/publications

Published and distributed
by the
Texas Commission on Environmental Quality
PO Box 13087
Austin TX 78711-3087

The TCEQ is an equal opportunity/affirmative action employer. The agency does not allow discrimination on the basis of race, color, religion, national origin, sex, disability, age, sexual orientation or veteran status. In compliance with the Americans with Disabilities Act, this document may be requested in alternate formats by contacting the TCEQ at 512/239-0028, Fax 239-4488, or 1-800-RELAY-TX (TDD), or by writing P.O. Box 13087, Austin, TX 78711-3087.

printed on recycled paper using soy-based ink

Contents Continued

APPENDICES

Appendix A
25 **Hazardous Substances**

Appendix B
33 **Ignitable Solids**

Appendix C
35 **Class 1 Toxic Constituents' Maximum Leachable Concentrations**

Appendix D
37 **7-Day Distilled Water Leachate Test's Maximum Contaminant Levels**

Appendix E
38 **Class 1 Toxic Constituents**

Appendix F
40 **7-Day Distilled Water Leachate Test Procedure**

Appendix G
41 **Form Codes**

Appendix H
48 **Codes for Out-of-State Waste Generators and Receivers**

LIST OF FIGURES

1 **1-1. Hazardous and Nonhazardous Wastes**

15 **5-1. Components of a Texas Waste Code**

LIST OF TABLES

3 **2-1. An Operation's Overall Waste Flow Can Produce Multiple "Waste Streams"**

6 **3-1. TCLP Regulatory Levels**

15 **5-1. Questions to Ask about Some Combinations of Coding and Classification**

6

Chapter 1

Introduction

Who Should Read This Booklet

The main purpose of this guidance document is to help generators of industrial and hazardous waste follow state and federal requirements on

- classifying and coding these wastes,
- keeping proper records, and
- notifying the Texas Commission on Environmental Quality (TCEQ) about the wastes, when required.

Specifically, this document gives guidance on the regulations in Title 30 of the Texas Administrative Code (TAC), Chapter 335, Subchapter R (Waste Classification). The rules in Subchapter R apply both to wastes generated in Texas and to those generated outside the state and sent to Texas for treatment, storage, and/or disposal. Correct and timely compliance with the regulations on industrial and hazardous wastes helps to protect the state's environment and safeguard the health of Texas citizens.

PUT ON BOARD

Waste Classes

Figure 1 shows the main categories of hazardous and nonhazardous waste. The following paragraphs give brief descriptions of these categories—important terms that will be used throughout this booklet. (For more details, see the classification checklist in Chapter 3 and the definitions in Chapter 8.)

Hazardous Waste

A hazardous waste is one that is listed as such by the U.S. Environmental Protection Agency (EPA) or that exhibits one or more hazardous characteristics (also as specified by the EPA). Hazardous wastes are threatening to human health and the environment.

Listed Hazardous Waste

EPA lists over 400 wastes as hazardous. For more information see Part I-A of the checklist in Chapter 3.

Characteristically Hazardous Waste

Waste that displays one or more of four hazardous characteristics:

- *ignitability* (easily flammable—for example, solvents);
- *reactivity* (capable of rapid chemical reaction–for example, peroxides);
- *corrosivity* (highly acidic or alkaline, able to dissolve metals or burn the skin–for example, hydrochloric acid or sodium hydroxide); and
- *toxicity* (a waste that can release toxic constituents into the environment—for example, lead-based paint).

For more information on hazardous characteristics, see Part I-B of the checklist in Chapter 3.

Nonhazardous Waste

Any industrial waste that is not listed as hazardous and does not have hazardous characteristics. (Class 1 nonhazardous industrial waste can include certain levels of constituents and specified properties that, at higher levels, might otherwise render the waste hazardous—see Part II of the checklist in Chapter 3.)

Industrial versus Nonindustrial Wastes

Industrial wastes result from (or are incidental to) operations of industry, manufacturing, mining, or agriculture—for example, wastes from power generation plants, manufacturing facilities, and laboratories serving an industry. *Nonindustrial wastes*, by contrast, come from sources such as schools, hospitals, churches, dry cleaners, most service stations, and laboratories serving the public.

Figure 1. Hazardous and Nonhazardous Wastes

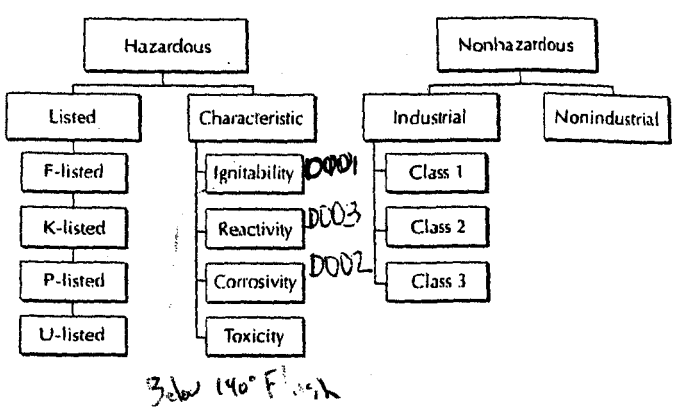

Nonhazardous Industrial Waste

In this grouping, ***Class 1*** **waste** is considered potentially threatening to human health and the environment if not properly managed, because of the constituents and properties this class can include. Therefore, there are special handling requirements for Class 1 wastes. An example is water contaminated with ethylene glycol.

Examples of ***Class 2*** wastes include waste-activated sludge from biological wastewater treatment. ***Class 3*** includes materials such as demolition debris—for example, bricks—that are insoluble, do not react with other materials, and do not decompose. Class 2 and 3 wastes are often accepted by local landfills. However, a Class 2 or 3 designation does not mean that the waste is incapable of causing harm in every management (or mismanagement) situation.

What This Booklet Explains How to Do

After you have worked through this booklet (and that includes consulting the rules referred to in it), you will be able to accomplish the following tasks:

- **Identify *which wastes* you must classify, code, and notify** the TCEQ about. Chapter 2 introduces a key concept—"waste streams"— that helps you decide these points.
- **Classify your waste.** Chapter 3 gives you a step-by-step approach for putting your waste into one of four categories: either *hazardous* waste or *nonhazardous* industrial waste Classes 1, 2, or 3.
- Know what kind of information (either from **process knowledge** about your facility's operation or from **analytical testing**) that you must **document** and keep on file (Chapter 4).
- **Understand the 8-character Texas waste code**. Chapter 5 explains the components of the waste code:
  - ▼ 4-character ***sequence number*** (may be a number, letters, or a combination; generally, identifies a particular waste or where it came from);
  - ▼ 3-digit ***form*** code; and
  - ▼ 1-character classification (from Chapter 3).
- **Know how to notify TCEQ** about your wastes and **which TCEQ form** to use (Chapter 6).

Some Things This Booklet Does NOT Cover

Nonhazardous Nonindustrial Waste The rules in 30 TAC Chapter 335, ***do NOT*** apply to **nonhazardous** waste generated by **nonindustrial** facilities.

Selective Coverage of Chapter 335

Also, please be aware that this guidance document only covers 2 subchapters (A and R) of 30 TAC Chapter 335, which contains 18 subchapters in all. This booklet covers only classification and coding, documentation you must create and keep on file, and notifications you must send to TCEQ (and the forms to use for that purpose). This booklet is not a substitute for the complete rules themselves. (You can obtain your own copies of the full, official state rules from the TCEQ's publications unit. Ways to contact this unit are listed under the heading "TCEQ and EPA Forms" in Chapter 6.)

Classification versus Risk Reduction

There is an important distinction between (1) classifying your wastes; and (2) meeting the ***risk reduction standards***, which are set forth in 30 TAC Chapter 335, Subchapter S. Here are the most common situations where the risk reduction standards apply:

- a facility that handled industrial wastes is being closed;
- a site where unauthorized discharge of wastes occurred is being cleaned up.

If you are involved in a situation like these, you need to inform yourself about the risk reduction standards. The guidance document you are now reading does not cover this topic. (Again, you can obtain a copy of Subchapter S, and other information, from the TCEQ publications unit—see the heading "TCEQ and EPA Forms" in Chapter 6.)

Who Are "You" In This Booklet?

Throughout this guidance document, generators of industrial and/or hazardous wastes will be referred to as "generator," "generators," or—for a more direct way of writing—simply as "you." Also, 30 TAC Chapter 335, Subchapter R, will be referred to as "these rules" or "the rules." Finally, "this booklet," "this document," or "this guidance document" refers to *Guidelines for the Classification and Coding of Industrial and Hazardous Wastes*, TCEQ Publication Number RG-022—the booklet you are now reading.

Chapter 2

"Waste Streams"–A Key Concept

READ WHOLE PAGE

When the preceding chapter mentioned that this booklet will instruct you on how to classify, code and report about wastes, a question that naturally might have come to your mind is "***How*** do I know which wastes must be classified, coded, and reported?" (The general answer is that you must perform these processes on all hazardous wastes and nonhazardous industrial wastes.)

In discussing this point, federal regulators use the term *waste stream,* in both of the following senses: First, it can mean the total flow of all waste from homes, businesses, and industry. Second, within this total flow, smaller "waste streams" can be distinguished—for example, "the residential waste stream," "the recyclable waste stream," and others.

Similarly, within the overall flow of waste from your ordinary operations or processes, a number of particular waste streams can be identified. For example if your process ordinarily produces a hazardous acidic waste, and at some point you neutralize that waste, these are two separately identifiable "waste streams."

Each waste stream—the acidic waste and the neutralized waste, in this example–must be identified by an 8-character Texas waste code, which identifies the waste stream as a separate entity and gives information about its origin, general nature, and hazardous status. (Chapters 3 through 5 go into the details of how this 8-character code is arrived at.)

Table 2-1 gives examples of some situations in which the waste flow from an operation or process can produce more than one waste stream, each of which must be classified and coded; and an example of a situation that does *not* result in more than one waste stream. For specific guidance on specific waste streams, contact the TCEQ.

WATER VS SLUDGE

In general, whenever you have or suspect the existence of an additional, distinct waste stream, you must determine its classification (Chapter 3), arrive at a Texas waste code for it (Chapter 5), and in most cases notify TCEQ about the additional waste stream (Chapter 6—which also gives details about some of the exceptions to the requirements for notification: for example, a slight change or variation in a waste stream's composition may not require notification.)

DRAIN SLUDGE VS CENTRIFUGE

Table 2-1. An Operation's Overall Waste Flow Can Produce Multiple "Waste Streams"

IF you have WASTES that are ...	AND they come from PROCESSES that are ...	THEN the wastes are considered ...
different	similar	**different** "waste streams"—for example, a sludge removed from an electroplating vat is not the same waste stream as a liquid removed from an electroplating vat.
similar	different	**different** "waste streams"—for example, methylene chloride used in a paint- stripping operation is not the same waste stream as methylene chloride used in laboratory analysis.
similar	similar	**the same** "waste stream"—for example, a site may have several paint booths that perform the same activities with the same materials, and each produces drop cloth waste. These drop cloth wastes, from the various locations at this site, could be considered one waste stream as long as they were all classified the same (for more on classification, see Chapter 3).
altered physically or chemically by treatment	N/A	**different** "waste streams"—for example, if a sludge is dewatered, it may produce two new waste streams, one a solid and the other a liquid.

9

Chapter 3

Waste Classification Checklist

This chapter provides a checklist to help you classify your hazardous waste and your nonhazardous industrial waste. For an overview of these types of waste, refer back to Figure 1 in Chapter 1; for more details, refer to 30 TAC Chapter 335 Subchapter R Sections 335.501–508. (You can obtain your own copy of state rules from the TCEQ publications unit; ways to contact this unit are listed under the heading "TCEQ and EPA Forms" in Chapter 6.)

Process Knowledge vs. Analytical Testing

In determining a waste stream's classification, a generator may use *process knowledge* and/or *analytical testing*. Process knowledge is the owner or operator's knowledge about how the facility operates, how a waste was produced and handled, and other information based on operating experience. Analytical testing is information about a waste from laboratory analysis.

In the checklist, the nonhazardous classification criteria that could involve analytical testing have been marked with an *. This marking **does not** mean that analytical testing is the only way to evaluate these criteria. If sufficient process knowledge is available, little or no analysis may need to be performed. You should evaluate whether you have enough process knowledge about the waste to classify it or whether analytical testing is needed.

Documentation

Regardless of whether you rely on process knowledge or opt for analytical testing, you must fully document the information used in making your waste classification. **A completed checklist does not qualify as full documentation.** Documentation should be in a written and/or electronically stored format that is reasonably accessible and easily reproducible. For details on documentation requirements, see Chapter 4.

Part I. Hazardous Waste Determination

All waste generators should work through Part I of this checklist. In this part you will determine whether your waste is hazardous because (a) it is listed as hazardous by EPA or (b) it displays characteristics that EPA says make it hazardous.

In federal regulatory language, the first step in classifying your waste is called "making a *hazardous waste determination*." The definition of hazardous waste, based upon the Resource Conservation and Recovery Act (RCRA), is found in Title 40 of the Code of Federal Regulations (CFR), Part 261.

This TCEQ guidance document reflects the hazardous waste definition in the *Federal Register* as of July 1, 2004. If that definition changes, the generator is still responsible for making an accurate hazardous waste determination in accordance with the latest regulations—instead of with what is printed in this guidance document.

IF the answer to any of the questions in Part I is "Yes,"
THEN the waste is hazardous.

Possible *Exclusions* from Hazardous Classification

Under certain conditions, some types of wastes are excluded from being considered hazardous (40 CFR Sections 261.3–4). Generators may wish to review these exclusions before working through Part I of this checklist.

EPAPA011000235

Facility NOR No.:		Waste Code:	
Waste Stream Name:			

Part 1. General Information

Description of Process which generates the waste:	
Description of the Waste Stream:	

Part 2. Hazardous Waste Determination

If the answer to any of the questions in the Part is "yes", then the waste is hazardous. If it is hazardous, it cannot be classified as a non-hazardous waste. If the answers are "no" to *all* of the questions and the waste is an industrial waste, then proceed to Part 3. If the answers are "no" to all of the questions and the waste is a non-industrial waste, stop here

1. Is the waste a listed hazardous waste, mixed with a listed hazardous waste, or derived from a listed hazardous waste?		
2. Is the waste ignitable per 40 CFR 261.21?		
3. Is the waste corrosive per 40 CFR 261.22?		
4. Is the waste reactive per 40 CFR 261.23?		
5. Is the waste toxic per 40 CFR 261.24?		

Part 3. Class 1 & class 2 Waste Determination

If the answer to any of the questions in the Part is "yes", then the non-hazardous, industrial waste is a Class 1 waste. If all the answers to the following questions in this Part ar "no", then the industrial waste can be considered a Class 2 waste.

1. Has the generator chosen to classify his non-hazardous waste as a Class 1 waste? (If yes, okay to stop here and answer N?A for the following questions.)	
2. Are any of those constituents listed in Table 1 of 30 TAC 335.521(a)(1) present at concentrations equal to or greater than levels identified in that table?	
3. Is the waste a container (if yes, see TNRCC rules)?	
4. Does the waste contain Regulated Asbestos Containing Material as defined in 40 CFR Part 61?	
5. Is the waste contaminated by a material that originally contained greater than or equal to 50 parts per million total polychlorinated biphenyls (PCBs)?	
6. Does the waste contain greater than or equal to 50 ppm PCBs?	
7. If your waste is specifically identified as a petroleum substance, or as contaminated with a material identified as a petroleum substance waste, does the waste contain greater than 1,500 ppm TPH?	
8. Is the waste from the production of a "new chemical substance"?	
9. Is the waste generated outside the state of Texas?	

Facility NOR No.:		Waste Code:	
Waste Stream Name:			

10. If the waste is a liquid, does it have a flash point of less than 65.6 degrees C)150 degrees F)?	
11. Is the waste a solid or semi-solid which, under conditions normally incident to storage, transportation, and disposal, is liable to cause fires through friction, retained heat from manufacturing or processing, or which can be ignited readily, and when ignited burns so vigorously and persistently as to create a serious hazard?	
12. Is the waste a solid or semi-solid which, when mixed with an equivalent weight of ASTm Type II laboratory distilled or de-ionized water, produces a solution having a pH less than or equal to 2 greater than or equal to 12.5?	
13. Is information lacking which demonstrates that the waste is a Class 2 or Class 3 waste?	

If the answer to any of the preceding questions in this Part is"yes", then the non-hazardous, industrial waste is a Class 1 waste. If all the answers are "no", then the industrial wste can be considered a Class 2 waste.

If the answers are "no" to *all* of the preceding questins of this Part, the industrial generator may wish to evaluate the waste for a possible Class 3 classification.

Manager Name

Manager Signature

Date

Part I-A. *Listed* Hazardous Waste Determination

The EPA lists some 400 hazardous wastes.

Information to Help You Make This Determination

Descriptions of listed waste are found in 40 CFR Part 261, Subpart D, Sections 261.31–33. These wastes are often referred to as follows:

- "F" listed waste (waste from nonspecific sources, Section 261.31); — PG 64
- "K" listed waste (wastes from specific sources, Section 261.32); - PG 68
- "P" listed waste (unused acutely hazardous off-specification materials as well as container residues and spill residues of these materials, Section 261.33);
- "U" listed waste (unused toxic hazardous off-specification materials as well as container residues and spill residues of these materials, Section 261.33). PG 73

QUESTION: Is the waste a listed hazardous waste, or is it mixed with or derived from one? ☐ Yes ☐ No

Part I-B. *Characteristic* Hazardous Waste Determination

Wastes may be hazardous if they display any of four characteristics: ignitability, corrosiveness, reactivity, or toxicity.

Information to Help You Make This Determination

Ignitability D001

Wastes that are hazardous because they may ignite include the following:

- Liquid wastes (other than those aqueous waste containing less than 24 percent alcohol by volume) that have a flash point less than 60°C (140°F). (The test method is the Pensky-Martens closed cup tester, using the test method specified in ASTM Standard D-93-79 or D-93-80, or a Setaflash closed cup tester, using the test method specified in ASTM Standard D-3278-78.)
- Nonliquid wastes that, under standard temperature and pressure, are capable of causing fire through friction, absorption of moisture, or spontaneous chemical changes and, when ignited, burn so vigorously and persistently that they create a hazard.
- Wastes that meet the definition of an ignitable compressed gas (see 49 CFR Section 173.300).
- Wastes that meet the definition of an oxidizer (see 49 CFR Section 173.151).

QUESTION: Is the waste ignitable according to 40 CFR Section 261.21? ☐ Yes ☐ No

Corrosiveness D002

Wastes that are hazardous because they are corrosive include the following:

- aqueous wastes with a pH of 2 units or below or of 12.5 units or above;
- liquid wastes that corrode steel at a rate greater than 6.35 mm (0.250 inches) per year.

QUESTION: Is the waste corrosive according to 40 CFR Section 261.22? ☐ Yes ☐ No

Reactivity D003

A waste is considered reactive if it meets any of the following conditions:

- It is capable of detonation or explosive decomposition or reaction
  - ▼ at standard temperature and pressure,
  - ▼ if subjected to a strong ignition source, or
  - ▼ if heated under confinement.
- When mixed with water, it is
  - ▼ potentially explosive,
  - ▼ reacts violently, or
  - ▼ generates toxic gases or vapors.
- If a cyanide or sulfide-bearing waste is exposed to pH conditions between 2 and 12.5, it can generate enough toxic gases, vapors, or fumes to present a danger to human health or the environment. Generally, if a waste generates **250** ppm or more of reactive cyanides or **500** ppm or more of reactive sulfides, it is considered a reactive waste. (It should be noted that these levels of reactive compounds are just guidance. Each waste must be evaluated for reactivity on a case-by-case basis).
- It is normally unstable and readily undergoes violent change without detonating.
- It is a forbidden explosive (as defined in 49 CFR 173.51, or a Class A explosive as defined in 49 CFR 173.53).
- It is a Class B explosive (see 49 CFR Section 173.88).

QUESTION: Is the waste reactive according to 40 CFR Section 261.23? ☐ Yes ☐ No

Toxicity → PAGE 61 D004 → D043

A waste is toxic if the toxicity characteristic leaching procedure (TCLP) shows that a representative sample from the waste contains one or more constituents at or above the levels listed in Table 3-1. The TCLP is described in EPA Method 1311 (SW-846).

QUESTION: Is the waste toxic according to 40 CFR Section 261.24? ☐ Yes ☐ No

Table 3-1. TCLP Regulatory Levels

arsenic — 5.0 mg/l	1,4-dichlorobenzene — 7.5 mg/l	nitrobenzene — 2.0 mg/l
barium — 100.0 mg/l	1,2-dichloroethane — 0.5 mg/l	pentachlorophenol — 100.0 mg/l
benzene — 0.5 mg/l	1,1-dichloroethylene — 0.7 mg/l	pyridine — 5.0 mg/l
cadmium — 1.0 mg/l	2,4-dinitrotoluene — 0.13 mg/l	selenium — 1.0 mg/l
carbon tetrachloride — 0.5 mg/l	endrin — 0.02 mg/l	silver — 5.0 mg/l
chlordane — 0.03 mg/l	heptachlor (and its epoxide) — 0.008 mg/l	tetrachloroethylene — 0.7 mg/l
chlorobenzene — 100.0 mg/l	hexachlorobenzene — 0.13 mg/l	toxaphene — 0.5 mg/l
chloroform — 6.0 mg/l	hexachlorobutadiene — 0.5 mg/l	trichloroethylene — 0.5 mg/l
chromium — 5.0 mg/l	hexachloroethane — 3.0 mg/l	2,4,5-trichlorophenol — 400.0 mg/l
o-cresol — 200.0 mg/l	lead — 5.0 mg/l	2,4,6-trichlorophenol — 2.0 mg/l
m-cresol — 200.0 mg/l	lindane — 0.4 mg/l	2,4,5-TP (Silvex) — 1.0 mg/l
p-cresol — 200.0 mg/l	mercury — 0.2 mg/l	vinyl chloride — 0.2 mg/l
cresol — 200.0 mg/l	methoxychlor — 10.0 mg/l	
2,4-D — 10.0 mg/l	methyl ethyl ketone — 200.0 mg/l	

Review of Checklist Part I—Hazardous Waste

IF the answer to any of the preceding questions in Part I is "Yes,"
THEN the waste is HAZARDOUS; PROCEED to Chapter 4.

IF the answers are "No" to all the preceding questions,
AND the waste is NONINDUSTRIAL,
THEN STOP here.

IF the answers are "No" to all of the preceding questions,
AND the waste is INDUSTRIAL,
THEN PROCEED to Part II.

Part II: Nonhazardous Industrial Waste Classes 1 & 2

The determination in this part of the checklist applies only to nonhazardous industrial waste—see figure 1 in Chapter 1. (This part of the checklist is based on regulations found in 30 TAC Sections 335.505–06 and 335.508).

IF the answer to any of the **un-numbered** questions in this part of the checklist is "Yes,"
THEN the nonhazardous industrial waste is a Class 1 waste.

IF all the answers to the **un-numbered** questions in this part are "No,"
THEN the industrial waste is a Class 2 waste.

Generator's Self-Classification

QUESTION: Has the generator chosen to classify its nonhazardous waste as Class 1? ☐ Yes ☐ No

Container Waste

IF the waste is a container, greater than 5 gallons in holding capacity, which has held

- ▼ a hazardous substance (as defined in 40 CFR Part 302 and listed in Appendix A of this guidance document),
- ▼ a hazardous waste (including acutely hazardous wastes),
- ▼ a Class 1 waste, and/or
- ▼ a material that would be classified as a hazardous or Class 1 waste if disposed of,

PAGE 32

THEN answer questions 1 and 2. (*Please note that containers that have held acutely hazardous wastes must be triple-rinsed before they can be classified as empty*).

IF these conditions are not present in your situation,
THEN proceed to the next un-numbered question.

1. Has the container had all its residues removed? ☐ Yes ☐ No
2. Has the container been rendered unusable? ☐ Yes ☐ No

QUESTION: Are *any* of the answers to questions (1) or (2) above "NO"? ☐ Yes ☐ No

Regulated Asbestos-Containing Material (RACM)

(See Chapter 8, Definition of Terms, for information on RACM.)

QUESTION: Does the waste contain asbestos material identified as RACM, as defined in 40 CFR Part 61? * ☐ Yes ☐ No

Polychlorinated Biphenyls (PCBs)

QUESTION: Is the waste contaminated by a material that originally contained 50 or more parts per million (ppm) total PCBs? * ☐ Yes ☐ No

QUESTION: Does the waste contain 50 or more ppm PCBs?* ☐ Yes ☐ No

Petroleum Substance Waste

1. Is your waste specifically identified as a *petroleum substance* (see Chapter 8, Definitions of Terms) or contaminated with a material identified as a petroleum substance waste? ☐ Yes ☐ No

2. Does the waste contain more than 1,500 ppm total petroleum hydrocarbons (TPH)? ☐ Yes ☐ No

QUESTION: Are the answers to **both** of the numbered questions above "Yes"? (If one or both of the answers are "No," enter "No" for this question.) ☐ Yes ☐ No

"New Chemical Substance"

See "new chemical substances wastes" in Chapter 8, Definitions and Terms, for a description of how this particular type of waste may be classified as Class 2 or 3.

QUESTION: Is the waste from the production of a "new chemical substance," as defined by the federal Toxic Substances Control Act, 15 U.S.C.A. Section 2602(9)? ☐ Yes ☐ No

Out-of-State Origin

See "wastes generated out-of-state" in Chapter 8, Definitions of Terms, for details on how this particular type of waste may be classified as Class 2 or 3.

QUESTION: Is the waste generated outside Texas? ☐ Yes ☐ No

Constituent Levels and Specified Properties for Nonhazardous Industrial Class 1 Wastes

QUESTION: If the waste is a liquid, does it have a flash point of less than 65.6°C (150°F)? * ☐ Yes ☐ No

FLASH

QUESTION: Is the waste a solid or semi-solid that—under conditions normally encountered in storage, transportation, and disposal—

- is liable to cause fires through friction or through retained heat from manufacturing or processing; or
- can be ignited readily, and when ignited burns so vigorously and persistently as to create a serious hazard? ☐ Yes ☐ No

16

SOLID PH

QUESTION: Is the waste a semi-solid or solid that, when mixed with an equivalent weight of ASTM Type II laboratory distilled or deionized water, produces a solution with a pH of 2 or less or 12.5 or more? ☐ Yes ☐ No
(*Exception:* for solidified, stabilized, encapsulated, or otherwise chemically bound wastes, an exception is provided in 30 TAC Section 335.505(3)) *

QUESTION: Does the waste leach Class 1 toxic constituents at or above the levels listed in Table 1, Appendix 1 of 30 TAC Chapter 335 Subchapter R when submitted to the toxicity characteristic leaching procedure (TCLP)? * ☐ Yes ☐ No
(For a copy of Table 1, Appendix 1, see Appendix C of this guidance document.)

PAGE 41

(Where matrix interferences of the waste cause the Practical Quantitation Limit (PQL) of the specific analysis to be greater than the Maximum Concentration listed in Table 1, Appendix 1 of 30 TAC Chapter 335 Subchapter R, then the achievable PQL becomes the Maximum Concentration, provided that the generator maintains documentation that satisfactorily demonstrates to the TCEQ that lower levels of quantitation of a sample are not possible.)

Lab test

A satisfactory demonstration includes the results from the analysis of the waste for that specific constituent by a laboratory using an appropriate method found in *Test Methods for the Evaluation of Solid Waste, Physical/Chemical Methods* (EPA SW-846); *Methods or Chemical Analysis of Water and Wastes* (EPA-600 series); *Standard Methods for the Examination of Water and Wastewater*; *American Society for Testing and Materials (ASTM) Standard Methods*; or an equivalent method approved by the TCEQ.

Lack of Class 2 or 3 Information

QUESTION: Is information lacking that demonstrates the waste belongs in Class 2 or 3? ☐ Yes ☐ No

Review of Checklist Part II: Class 1 or 2 Nonhazardous Industrial Waste

IF	the answer to any of the preceding **un-numbered** questions in Part II is "Yes,"
THEN PROCEED	the nonhazardous industrial waste is a Class 1 waste. to Chapter 4.
IF	the answers are "No" to all the preceding **un-numbered** questions in Part II,
THEN PROCEED	the industrial waste is a Class 2 waste. to Chapter 4.
IF	the answers are "No" to all of the preceding **un-numbered** questions in Part II,
AND	the industrial generator wishes to evaluate the waste for a possible Class 3 status,
THEN PROCEED	to Part III.

Part III. Nonhazardous Industrial Class 3 Waste

This part of the checklist applies only to nonhazardous, industrial waste that does not meet the definition of a Class 1 waste and is not specifically identified as a Class 2 waste. (The corresponding regulations for this part of the checklist can be found in 30 TAC Sections 335.507 and 335.508.)

Part III-A. Initial Determinations for Class 3 Status

IF the answer to any of the following questions in Part III-A is "Yes,"
THEN the nonhazardous, industrial waste ***cannot*** be considered a Class 3 waste.

Containers

QUESTION: Is the waste an empty container? ☐ Yes ☐ No

Medical Waste

(For a definition, see "medical wastes" in Chapter 8.)
QUESTION: Is the waste a medical waste regulated under 30 TAC Chapter 330, Subchapter Y? ☐ Yes ☐ No

Distilled Water Leaching Test

QUESTION: When subjected to the 7-day distilled water leaching test, does the waste leach constituents at or above the maximum contaminant levels listed in Table 3, Appendix 1 of 30 TAC Chapter 335, Subchapter R? * ☐ Yes ☐ No
(Table 3 is reproduced in Appendix D of this guidance document.)

Toxicity Characteristic Leaching Procedure

QUESTION: When submitted to the toxicity characteristic leaching procedure (TCLP), does the waste leach Class 1 toxic constituents listed in Table 1, Appendix 1 of 30 TAC Chapter 335 Subchapter R at or above their detection levels? * ☐ Yes ☐ No
(The list of Class 1 toxic constituents is reproduced in Appendix E of this guidance document.)

Exclusion: Excluded from this list of Class 1 toxic constituents are those addressed in the previous question (that is, constituents identified in Table 3, Appendix 1 of 30 TAC Chapter 335 Subchapter R).

Petroleum Hydrocarbons

QUESTION: Does the waste contain detectable levels of petroleum hydrocarbons (Method 1005)? * ☐ Yes ☐ No

Polychlorinated Biphenyls (PCBs)

QUESTION: Does the waste contain detectable levels of PCBs? * ☐ Yes ☐ No

Decomposition

QUESTION: Is the waste readily decomposable? ☐ Yes ☐ No

Review of Checklist Part III-A: Class 3 Nonhazardous Industrial Waste

IF the answer to any of the preceding questions in Part III-A is "Yes,"
THEN the nonhazardous, industrial waste ***cannot*** be considered a Class 3 waste.

IF all the answers to the preceding questions in Part III-A are "No,"
THEN proceed to Part III-B to continue the waste's evaluation for possible Class 3 status.

Part III-B: Final Determinations for Class 3 Status

Inertness

QUESTION: Is the waste inert? (Inertness refers to chemical inactivity of an element, a compound, or a waste.) ☐ Yes ☐ No

Insolubility

QUESTION: Is the waste essentially insoluble? ☐ Yes ☐ No
(*Note*: wastes that contain liquids are *NOT* considered insoluble.)

Review of Checklist Part III

IF the answer to any question under Part III-B is "No,"
THEN the nonhazardous, industrial waste ***cannot*** be considered a Class 3 waste.

IF all the answers to the questions in Part III-A are "No,"
AND all the answers to the questions in Part III-B are "YES,"
THEN the nonhazardous industrial waste is a Class 3 waste.

Part IV. Variance from Waste Classification

The TCEQ may determine, on a case-by-case basis, the merits of a variance request for a specific nonhazardous classification. The burden of justifying the need for a variance is on the requestor. The requestor must submit information sufficient to clearly indicate the issues involved, the reason(s) for the request, and both the positive and negative impacts that may result from the granting of the variance. (The regulations corresponding to these types of variance requests can be found in 30 TAC Section 335.514, Variance from Waste Classification Provisions.)

* **As a reminder,** these characteristics need not necessarily be addressed by analytical testing. A generator may be able to address them through process knowledge. For more information on process knowledge, please see Chapter 4 of this guidance document.

Chapter 4

Process Knowledge, Analytical Testing, and Documentation Requirements

Introduction

Now that you know how to classify your wastes, you are ready to compile supporting documentation. Documentation should support the classification and coding of a waste stream. You must properly document each waste stream generated by the facility, and keep that documentation for at least three years after the waste is no longer generated, stored, or recycled or until the site is closed.

The regulations on documentation requirements can be found in 30 TAC Section 335.9 (Record Keeping and Annual Reporting Procedures Applicable to Generators), Section 335.70 (Record Keeping), Section 335.510 (Sampling Documentation), Section 335.511 (Use of Process Knowledge), and Section 335.513 (Documentation Required).

The TCEQ randomly audits a portion of waste stream *notifications* (see Chapter 6) in order to ensure proper classification and coding of waste in Texas. When the TCEQ sends you a request for information for the purpose of an audit, you must send the agency the information that you have gathered to make your hazardous waste determination/waste classification. Please use Chapter 4 as a guide to compiling supporting documentation for each waste stream generated at your facility.

Process Knowledge

If process knowledge is used in classifying a waste, that knowledge must be documented and kept on file for three years. Process knowledge must be in writing or stored in some electronic form. It cannot be stored solely in someone's mind. The process knowledge must support a generator's reasoning about why the waste has been given a particular classification. It must also support the generator's reasoning about why a particular test method was not performed.

The following are some examples of process knowledge that may assist in classifying waste:

- description of the waste;
- date of initial waste generation;
- a detailed description of the process generating the waste (that is, identification of chemicals or other materials in the process that generated the waste stream (including any potential breakdown products);
- manufacturer's literature such as Material Safety Data Sheets—MSDSs (although they were not created for the purpose of determining Texas waste classification, and do not contain information on all constituents found in a product, MSDSs may be helpful);
- full description of activities that generated the waste stream;
- identification of potential contaminants;
- other documentation generated in conjunction with the particular process.

Analytical Data

If a generator uses analytical data to classify a waste, the data must be supported by documentation of the sampling procedure and the analytical testing. The following lists specify information that must be maintained when analytical data is used for classification purposes.

Sampling Procedures

The following procedure must be documented:

- dates of sample collection;
- description of the site and/or unit from which the sample was taken, including sampling locations;
- the method and equipment used for sampling;
- a description of the sampling techniques, including collection, containerization, and preservation;

- rationale—that is, supporting reasons—for the sampling plan (why the number, type, and location of samples taken accurately represent the waste stream being characterized).

Analytical Testing

Documentation of analytical testing must include the following:

- Analytical **results** (including quality control data).
- Analytical **methods** (including any preparatory methods).
- The **detection limits** for each analysis.
- **Name of laboratory** performing the analysis.
- **Chain of custody**—documentation tracking the condition of the waste containers. For example, were the waste containers and their seal intact or broken upon arrival at the laboratory? Were the containers full, half-full, or empty? Did all the containers arrive at the laboratory or just a partial shipment?
- Documentation that satisfactorily demonstrates that lower levels of *quantitation* are not possible (this is only necessary when the waste media causes the *Estimated Quantitation Limit* (EQL) of a Class 1 toxic constituent (as listed in Appendix E of this guidance document) to be greater than the concentration listed (*matrix interference*). (Terms in italics are explained in Chapter 8.)

Classification Checklist

Although the checklist in Chapter 3 can be used to help classify industrial and hazardous waste, a generator should support the checklist's "yes" or "no" responses with process knowledge and/or analytical data. A completed checklist by itself is not sufficient documentation to submit to the TCEQ in response to a random audit of classification.

For example, a generator answers "no" to the question "Is the waste ignitable according to 40 CFR Section 261.21." You can support this response by submitting process knowledge, analytical data, or both. If process knowledge is used, it must be **specific**. A general statement such as "the waste is not ignitable" would not be sufficient.

Instead, you should document specific actions you took and their results, such as (1) reviewed all constituents that may be present in the waste; (2) determined that each constituent present in the waste does not meet the definition of an ignitable waste; and (3) determined that the process generating the waste does not introduce any ignitable characteristics to the waste stream. You should keep copies of your documentation demonstrating that the constituents in the waste stream would not cause the waste to exhibit the characteristic of ignitability.

Rule of Thumb about Documentation

Remember that documentation should demonstrate why a waste has been given a particular classification. Here's a good rule of thumb: if someone else can review your classification documentation, using the published criteria and/or the checklist, and arrive at the same classification you did, then you have probably done a good job of compiling supporting documentation for a waste classification. On the other hand, if someone reviews your classification and still has unanswered questions, then you may want to gather additional documentation (from process knowledge and/or analytical data) to support your classification of that waste stream.

Chapter 5

Texas Waste Code Formula

CESQG
SQG
LQG
PG 55

Chapter 5 describes the 8-digit Texas waste code that identifies each of your waste streams. (Part of the information to complete this waste code comes from the waste determination process (described in Chapter 3) and from the documentation you must compile and keep on hand (described in Chapter 4).)

The formula for the Texas waste code is given in Figure 5-1. The rules corresponding to this formula can be found in 30 TAC Section 335.503 (Waste Classification and Waste Coding Required).

Sequence Number

Although called a sequence "number," this part of the code may contain a mix of numbers and letters—alphanumeric; and sometimes it may consist of letters alone. Various types of 4-digit sequence numbers are used in the Texas waste code.

- An **arbitrary and unique 4-digit number from 0001 to 9999** (no alpha characters), which is assigned by the generator when adding a waste stream to Texas facility's *Notice of Registration* (see Chapter 6, Notification Requirements). Once assigned to a particular waste stream, a sequence number **cannot be reassigned** to another waste stream. Generators need not sequentially assign sequence numbers to a facility's waste streams.
- A **4-digit alphanumeric number** assigned by the TCEQ (under the **one-time shipment program**) to wastes generated by unregistered generators within Texas. (Spill waste not managed under the Emergency Response Program may be handled in this manner.)
- **"SPIL"** to be assigned only by the Emergency Response Team of the Field Operations Division **for spill wastes regulated under the Emergency Response Program.**
- **"OUTS"** to be used for **wastes generated outside of Texas.**
- **"CESQ"** to be used by **municipal hazardous and industrial CESQGs** (Conditionally Exempt Small-Quantity Generators).
- **"TSDF"** (treatment, storage, and disposal facilities), to be used by facilities that (1) receive and consolidate a waste stream with other like waste streams (thus not changing the form or composition of the waste); or (2) store a received waste without treating or changing its form or composition. This sequence number does not apply to wastes that are treated or altered in some other way. The "TSDF" designation is to be used only by **facilities that store and/or accumulate waste** from more than one site for subsequent shipment to a treatment or disposal facility.

Form Code

The second series of numbers found in the Texas waste code is the "form code." The list of form codes as well as flowcharts that depict the choosing of a form code can be found in Appendix G.

Form codes are broken down into 10 major categories. They are Lab Packs, Inorganic Liquids, Organic Liquids, Inorganic Solids, Organic Solids, Inorganic Sludges, Organic Sludges, Inorganic Gases, Organic Gases, and Plant Trash. The various form codes and corresponding descriptions can be found under these categories in Appendix G.

In determining a waste stream's form code, TCEQ recommends that the generator first determine the major category into which the waste stream fits. Then review all the form code descriptions in that category to determine which code or codes best describe your waste stream. From this narrowed-down list, choose a form code for the waste stream.

Classification

The waste stream's classification completes the Texas waste code. As Figure 5-1 showed, this part of the Texas waste code will be "H" or "1", "2", or "3".

Stop! Are You about to Misclassify a Waste?

Table 5-1 provides additional information about using certain combinations of form and class codes.

EPAPA011000247

Figure 5-1. Components of a Texas Waste Code

4-digit Sequence Number	+	3-digit Form Code	+	1-digit Classification Code
(____	+	___	+	___)
Identifies specific waste streams; usually assigned by the generator; under certain conditions, the TCEQ may assign it; see text for details		Indicates general type of waste; see Appendix G, Form Codes		H = Hazardous 1 = Class 1 2 = Class 2 3 = Class 3

GO OVER NOR. PG 87

Page 47

Table 5-1. Questions to Ask about Some Combinations of Coding and Classification

IF the waste is ...	AND you assigned form codes ...	Are you sure about a classification of ...
Any Class 3 waste	Any form code	*Class 3?* (You must submit all supporting documentation)
Asbestos solids, debris, slurry, sludge, etc.	311, 515	*Class 2?* (Wastes that contain regulated asbestos-containing material are Class 1)
Oils	205, 206[a]	*Class 2?* (Wastes that contain more than 1,500 ppm total petroleum hydrocarbons are Class 1)
PCB-containing materials	297,298,394,395,396,397, 398,399,494,495,496,497, 498,499,598,599,698,699	*Class 2?* (Wastes that contain 50 ppm or more PCBs are Class 1)
Petroleum-containing materials	205,206[a],296,489,510,603, 606,695,696	(Petroleum substance wastes that contain more than 1,500 ppm total petroleum hydrocarbons are Class 1)
Plant trash	902 and 999[b]	*Hazardous, Class 1, or Class 3?* (Only wastes that are Class 2 may be given a form code for plant trash)
Spent lead acid batteries	309[c]	Hazardous

[a]If your waste oil is nonhazardous, is managed under 40 CFR 279 and 30 TAC 324, and is recycled 100 percent, then do not add to your Notice of Registration (the central record that the TCEQ compiles from waste notifications you send in—see Chapter 6, Notification Requirements and Forms).

[b]Only form codes 902 and 999 may be used.

[c]If all your lead acid batteries are managed under the "universal waste" rule in 40 CFR Part 273, then do not add to your Notice of Registration.

GO TO 47

Chapter 6

Notification Requirements and Forms

This chapter describes forms and supporting documentation you must send to the TCEQ to notify the agency about waste streams that you generate. The regulations on notification can be found in 30 TAC Section 335.6 (Notification Requirements), Section 335.502 (Conversion to New Waste Notification and Classification System), Section 335.508 (Classification of Specific Industrial Solid Wastes), Section 335.509 (Waste Analysis), and Section 335.513 (Documentation Required).

Notifications about Industrial or Hazardous Waste

You must submit information about industrial or hazardous wastes no later than 90 days after the waste's initial generation and before handling, shipment, or disposal; use TCEQ form 00002 or the TCEQ State of Texas Environmental Electronic Reporting System (STEERS) software. (For information on obtaining TCEQ forms and how to access the STEERS information, see this chapter's section "TCEQ and EPA Forms.")

Please Note: All Large-Quantity Generators (LQG) **must** use STEERS to update their Notice of Registration (NOR). This requirement, effective December 15, 1997, is found in 30 TAC Section 335.6(b). Therefore, if you are a LQG and you need to update your NOR to replace inactivated waste code, please do so using STEERS.

The TCEQ uses the information submitted on these forms to create a record called the ***Notice of Registration***, which contains site-specific waste management information about industrial and municipal hazardous waste generators in Texas.

Notifications about New Chemical Substance Waste

For a Class 2 or Class 3 waste generated as the result of the production of a "new chemical substance" (see Chapter 8, Definitions of Terms), you must follow the instructions below:

- Give the TCEQ notice that the waste is from the production of a "new chemical substance."
- Submit all supporting reasons and documentation used in that waste's classification.
- Manage nonhazardous waste from the production of a "new chemical substance" as a Class 1 waste, unless you can provide appropriate analytical data and/or process knowledge demonstrating that the waste meets the definition of a Class 2 or Class 3, and the TCEQ concurs. (For definitions of Class 2 and 3, see Chapter 8 and the classification checklist in Chapter 3.)
- If you have not received concurrence or denial from the TCEQ within 120 days from the date of your request for review, you may manage the waste according to the requested classification, but you must give the TCEQ 10 working days written notice before managing the waste as a Class 2 or a Class 3.

Notifications about Class 2 and Class 3 Out-of-State Waste

If you want to ship a nonhazardous waste into Texas, it is automatically considered a Class 1 waste (and expected to be managed as such) unless

- you request the TCEQ to review your waste classification documentation supporting a lower classification such as Class 2 or 3; and
- the TCEQ concurs with the lower classification.

After concurrence from the TCEQ you must comply with the lower classification's requirements on shipping, record keeping, and disposal of the waste. If, after review of your documentation, the TCEQ disagrees with your waste classification, you must continue managing the nonhazardous waste as Class 1 waste.

Notifications about Other Industrial and Hazardous Wastes from out of State

Please note the following special requirements for the documentation of industrial and hazardous waste that is imported to Texas from foreign countries and other U.S. states.

- If out-of-state generators and importers of record want to bring hazardous waste into Texas, they must have an EPA Identification number. Generators and importers who do not have this ID number must obtain one from the EPA, using EPA Form 8700-12.
- Out-of-state generators or importers of record must fill out a Uniform Hazardous Waste Manifest (TCEQ-00311) and place their EPA ID number in Box 1 of this form.
- In Box B of the Uniform Hazardous Waste Manifest, use one of the generic numbers for identifying the country or state of origin. For example: F0061 for hazardous and or nonhazardous industrial waste imported from Mexico, D0022 for Louisiana (Appendix H gives these codes). For more information about manifesting imported industrial and hazardous waste, see 40 CFR 262.60 and 30 TAC 335.76 (d).
- OUTS must be used as the 4-digit sequence number of the Texas waste code in Box I of the manifest.

Notifications about Alternate Analytical Methods

Generators who propose an alternate analytical method must validate their alternate method by demonstrating that it is equal to or superior in accuracy, precision, and sensitivity to the corresponding EPA-approved methods for analytical testing given in *Standard Methods for the Examination of Water and Wastewater*, SW-846, EPA-600/4-79/020.

In making this demonstration, the generator must provide the TCEQ, at a minimum, the following documentation:

- a full description of the proposed method (including all equipment and reagents to be used);
- a description of type of waste and *waste matrices* to be analyzed (for definitions of terms in italics, see Chapter 8);
- comparative results of the proposed method and corresponding SW-846 or *ASTM* method;
- a complete assessment of interferences with the proposed method (see, for example, *matrix interference* in Chapter 8);
- a description of quality control procedures;
- additional information as needed and/or requested by the TCEQ to adequately review the proposed alternate method.

TCEQ and EPA Forms

How to Order

Notification forms can be obtained in several ways:

- Contact the TCEQ regional office near you.
- On the Internet go to http://www.tceq.state.tx.us and select the "Forms & Publications" link. Access the Forms Database and type in the form number. (The instructions for form TCEQ-00002 are in a separate download file).
- Fax your order to 512/239-4488, or order forms by voice at 512/239-0028, the TCEQ's publications unit. Be sure to give the form ***numbers*** that you want; this information will help the TCEQ get the correct form to you as quickly as possible.

STEERS ANNUAL WASTE SUMMARY

How to Access STEERS

State of Texas Environmental Electronic Reporting System (STEERS) information, including an application package, can be obtained as follows:

- on the Internet, go to https://www2.tceq.state.tx.us/steers; or
- call the STEERS Help Line at (512) 239-6925.

Currently Available Forms

Notification forms available at the time of this printing include the following:

- The hazardous or industrial waste **"Initial Notification Form,"** used for initial notification about a site, and adding a waste stream to your Notice of Registration (see chapter 6) or when recording a 6-digit waste code into one or more 8-digit waste codes. (form number: **TCEQ-00002**)
- The **"Hazardous or Industrial Waste Management Unit Form,"** used when adding information about a waste management unit to a Notice of Registration. (form number: **TCEQ-00002**)

- The **"Uniform Hazardous Waste Manifest,"** used by generators and transporters of hazardous waste and by owners or operators of hazardous waste treatment, storage, and disposal facilities for both inter- and intrastate transportation. (form number: **TCEQ-00311**–Only order form available on the Web)
- The **"One-Time Shipment Request ... for Shipment of Class 1, 2, 3 and EPA Hazardous Waste,"** used by unregistered generators, not by generators that already have a site's Notice of Registration. (form number: **TCEQ-00757**)
- The EPA **"Notification of Regulated Waste Activity"** form, used when notifying EPA of a federally regulated hazardous waste activity—for example, the generation of hazardous waste. (form number: **EPA 8700-12**–Available on the Web as part of TCEQ-00002)

Chapter 7

Management of Mechanical Shredding Wastes

The regulations on mechanical shredding waste can be found in 30 TAC Section 335.508 (Classification of Specific Industrial Solid Wastes).

Wastes generated by the mechanical shredding of automobiles, appliances, or other items of scrap, used, or obsolete metals are handled according to the provisions of the Texas Solid Waste Disposal Act, Health and Safety Code, Section 361.019 (Vernon Pamphlet 1992), until the TCEQ develops specific standards for the classification of this waste and ensures adequate disposal capacity.

These provisions say that you can dispose of mechanical shredding wastes in a municipal landfill facility authorized to accept Class 1 and 2 industrial solid wastes, if the shredding waste:

- contains no free liquids, and
- is not a hazardous waste.

As mentioned earlier, TCEQ may establish other requirements.

Chapter 8

Definitions of Terms

For readers' convenience, this chapter gives the full version of some abbreviations and brief descriptions of some important terms used in this guidance document. Full, official definitions can be found in the sources cited. Nothing in this chapter takes the place of any definitions in laws, rules, or regulations.

Acutely hazardous wastes (40 Code of Federal Regulations (CFRs) Parts 261.31–33 and subject to the exclusion established in 40 CFR Part 261.5: EPA hazardous waste numbers F020, F022, F023, F026, and F027)—A subset of *listed hazardous wastes* that carry the "H" code; they are considered very harmful to human health and the environment.

ASTM—American Society for Testing and Material

CFR—Code of Federal Regulations

Characteristically hazardous waste (40 CFR Part 261 Subpart C)—Any waste that exhibits the characteristics of ignitability, corrosivity, reactivity, and/or toxicity as defined by the EPA in 40 CFR Part 261 Subpart C. These are often referred to as the "D" wastes. (Also see Chapter 3 of this guidance document.)

Class 1 waste [30 TAC Section 335.1(14)]—Any waste or mixture of waste that, because of its concentration or physical or chemical characteristics is toxic; corrosive; flammable; a strong sensitizer or irritant; a generator of sudden pressure by decomposition, heat, or other means; or may pose a substantial present or potential danger to human health or the environment when improperly processed, stored, transported, disposed of, or otherwise managed. (The checklist in Chapter 3 takes you through the process of distinguishing hazardous waste from nonhazardous Class 1 waste.)

Class 2 waste [30 TAC Section 335.1(15)]—Any individual waste or combination of waste that cannot be described as hazardous waste or as nonhazardous Class 1 or Class 3 waste.

Class 3 waste [30 TAC Section 335.1(16)]—Waste that is *inert* and *essentially insoluble* (see definitions of terms in italics), usually including but not limited to materials such as rock, brick, glass, dirt, certain plastics, rubber, and similar materials that are not readily decomposable.

Classification code (30 TAC Section 335.503)—This last digit of the Texas waste code represents the classification of the waste stream. The letter H represents hazardous wastes; and the number 1, 2, or 3 represents nonhazardous industrial waste Class 1, 2, or 3.

Conditionally Exempt Small-Quantity Generator (30 TAC Section 335.78)—Generators of less than 100 kg (220 lbs) per month of hazardous waste, or less than 1 kg (2.2 lbs) per month of *acutely hazardous waste* (see description of term in italics in this chapter).

Essential insolubility (30 TAC Section 335.507)—Is established when using:

- the Seven-Day Distilled Water Leachate Test, and the extract from the sample of waste does not leach greater than the Maximum Contaminant Level listed in Appendix 1, Table 3 of 30 TAC Chapter 335, Subchapter R;
- the test methods described in 40 Code of Federal Regulations Part 261, Appendix II, and the extract from the sample of waste does not exhibit detectable levels of the constituents found in Appendix 1, Table 1 of 30 TAC Chapter 335, Subchapter R;
- an appropriate test method, and a representative sampling of the waste does not exhibit detectable levels of total petroleum hydrocarbon (TPH); ("Petroleum substance wastes" are not subject to 30 TAC's subsection on essential insolubility.)
- an appropriate test method, and a representative sampling of the waste does not exhibit detectable levels of polychlorinated biphenyls (PCBs).

Form code (30 TAC Section 335.503)—This code describes the general type of waste stream. It consists of three numbers, the 5th, 6th, and 7th digits in the Texas waste code (see Figure 4-1 in Chapter 4). More than one form code may apply to a particular waste stream.

Hazardous substance (30 TAC Section 335.508)—Any substance designated as "hazardous" in 40 CFR Part 302 (Table 302.4) including, but not limited to, waste designated as hazardous in the Resource Conservation Recovery Act (RCRA).

EPAPA011000253

Hazardous waste (40 CFR 261.3)—The EPA defines a waste as hazardous if it exhibits one or more of four hazardous "characteristics," or if it is one of several hundred wastes "listed" as hazardous. For details, see Chapters 1 and 3 of this guidance document.

Hazardous waste determination (30 TAC Section 335.504)—An evaluation of a waste to determine whether it meets the RCRA definition of a hazardous waste.

Inert (30 TAC Section 335.507)—Inertness refers to the chemical inactivity of an element, compound, or waste. Ingredients added to mixtures chiefly for the purposes of bulk and/or weight are normally considered inert.

Listed hazardous wastes (40 CFR Part 261 Subpart D)—Specific wastes that have been identified by the EPA as hazardous. These are often referred to as the "F" wastes (waste from nonspecific sources); "K" wastes (wastes from specific sources); "P" wastes (acutely hazardous off-specification materials, container residues, and spill residues of these materials); and "U" wastes (toxic, hazardous off-specification materials, container residues, and spill residues).

A waste is considered hazardous if

- it is listed in 40 CFR Part 261 Subpart D, or
- is mixed with or derived from a waste listed there, and
- has not been provided a particular exclusion from the definition of hazardous as provided in 40 CFR Sections 261.3–4.

Matrix interference—Interference with the precision of analytical testing for a particular constituent in a waste stream due to other material(s) in the sample (contamination by carryover). See also waste matrices.

Medical wastes (30 TAC Section 335.508)—Nonhazardous medical wastes that are subject to the provisions of 30 TAC Chapter 330 Subchapter Y are designated as Class 2 wastes. An example of such waste would be needle-bearing syringes from plant infirmaries.

"New chemical substance" waste (30 TAC Section 335.508)—If a nonhazardous industrial waste is generated as a result of the commercial production of a "new chemical substance" as defined by the federal Toxic Substances Control Act, *United States Code Annotated* (U.S.C.A.), Title 15, Section 2602(9), the generator must manage that waste as a Class 1 waste, unless the generator can provide appropriate analytical data and/or process knowledge demonstrating that the waste is Class 2 or Class 3, and the TCEQ concurs. If the generator has not received concurrence or denial from the TCEQ within 120 days from the date of the request for review, the generator may manage the waste according to the requested classification, but not before giving 10 working days written notice to the TCEQ.

Notice of Registration (NOR)—TCEQ term for the information it collects in its database on each hazardous or industrial waste handler: generator, receiver, transporter, and recycler. The NOR includes the facility's physical and mailing addresses, information on waste streams that are generated or handled at the site, a list of individual units at the facility where wastes are managed, and other information. It also contains the state facility identification numbers and the EPA facility number, issued by the TCEQ. The NOR serves to verify the information submitted by each handler. When a generator registers with the TCEQ using form TCEQ-00002, the agency sends back a printout of the information in its database about the site and generator. The handler should keep the NOR current and in on-site files and check it periodically to make sure that it accurately reflects the facility's waste streams and waste management units.

Petroleum-hydrocarbon-containing wastes (30 TAC Section 335.508)—Wastes resulting from the cleanup of leaking underground storage tanks (USTs), which are regulated under 30 TAC Chapter 334 Subchapter K (relating to Petroleum Substance Waste), are not subject to classification under 30 TAC Chapter 335 Subchapter R (Waste Classification).

Petroleum substance—A crude oil, or any refined or unrefined fraction or derivative of crude oil, that is a liquid at standard conditions of temperature and pressure. These substances include the following:

- combinations or mixtures of basic petroleum substances, such as crude oils, crude oil fractions, petroleum feedstocks, and petroleum fractions;
- aviation gasolines, aviation jet fuels, distillate fuel oils, residual fuel oils, gas turbine fuel oils, illuminating oils, lubricants, building materials, insulating and waterproofing materials, used oils;
- solvents or a combination or mixture of solvents—except for any listed substance regulated as a hazardous waste under the federal Solid Waste Disposal Act, Subtitle C (*United States Code*, Title 42, Section 6921, et seq.)—that are liquid at standard conditions of temperature (20° centigrade) and pressure (1 atmosphere). Examples include Stoddard

solvent, petroleum spirits, mineral spirits, petroleum ether, varnish makers' and painters' naphthas, petroleum extender oils, and commercial hexane.

The following materials are *not* considered petroleum substances:

- polymerized materials, such as plastics, synthetic rubber, polystyrene, high- and low- density polyethylene;
- animal, microbial, and vegetable fats;
- food-grade oils;
- hardened asphalt and solid asphaltic materials, such as roofing shingles, roofing felt, hot mix and cold mix; and
- cosmetics.

Practical Quantitation Limits (PQLs)—See quantitation.

Process Knowledge—See examples in Chapter 4 under this subheading.

Quantitation—Generally, measurement of quantity or amounts. The word appears in a number of specialized terms used in waste regulation:

- ***Quantitation Limits*** (QLs) indicate the levels at which measurements can be "trusted."
- ***Practical Quantitation Limits*** (PQLs) and ***Estimated Quantitation Limits*** (EQLs) are levels that are routinely and reliably detected and quantitated in a variety of sample matrices. These are 3 to 5 times the Method Detection Limits (MDLs). (See Chapter 1, SW 846, 1992.)
- ***Method Detection Limits*** (MDLs) take into account the reagents, sample matrix, and preparation steps applied to a sample in specific analytical methods. (See 40 CFR Part 136, Appendix B; Chapter 1, SW 846, July 1992.)

RCRA—Resource Conservation and Recovery Act (amendment to the Solid Waste Disposal Act). Primarily designed to regulate five types of disposal activities: hazardous waste, solid waste, underground storage tanks, oil waste, and medical waste. In this guidance document, any mention of "RCRA" refers to RCRA Subtitle C, which applies to all handlers of hazardous waste, including generators; transporters; and operators of treatment, storage, and disposal (TSDF) facilities. (RCRA, a federal law, covers only whether a solid waste is either hazardous or nonhazardous. Texas regulations further subdivide nonhazardous waste into Classes 1, 2, and 3.)

Regulated asbestos-containing material (RACM) (30 TAC Sections 335.508)—RACM includes the following:

- **friable** asbestos containing more than 1 percent asbestos[1] that, when dry, can be crumbled, pulverized, or reduced to powder by hand pressure;
- **nonfriable** asbestos-containing material containing more than 1 percent asbestos as measured by the method found in 40 CFR Part 763, Subpart E, Appendix E, Section 1 that, when dry, *cannot* be crumbled, pulverized, or reduced to powder by hand pressure.
- **Category I** nonfriable asbestos includes packings, gaskets, resilient floor coverings, and asphalt roofing products);
- **Category II** nonfriable asbestos includes transite shingles, transite pipes, and any nonfriable asbestos material not defined as Category I.

Regulated generators (30 TAC Chapter 335 Subchapters A and C)—If you generate the following amounts of waste, you are a regulated generator and must follow regulations in Chapter 335:

Waste Type	Monthly Amount
Class 1	100 kg (220 lbs) or more
hazardous	100 kg (220 lbs) or more
acutely hazardous	1 kg (2.2 lbs) or more

If you generate less than the amounts shown above, you are considered a Conditionally Exempt Small-Quantity Generator and are not subject to regulations requiring notification, manifesting, and fees.

Sequence number (30 TAC Section 335.503)—The first 4 digits of the waste code (actually these four characters may be numbers, letters, or a combination of the two). The sequence number is used as an internal numbering system determined by each generator. The number of a waste may range from 0001 to 9999, and can only be used once.

Solid waste (30 TAC Section 335.1 and 40 CFR Section 261.2)—Any discarded material such as garbage; refuse; sludge from a waste treatment plant,

[1]As determined using the method specified in 40 CFR Part 763, Subpart E, Appendix E, Section 1, Polarized Light Microscopy.

EPAPA011000255

water supply treatment plant, or air pollution control facility; or other material including solid, liquid, semisolid, or contained gaseous material resulting from industrial, municipal, commercial, mining, and agricultural operations. Solid wastes include any material that is abandoned by being disposed of; burned or incinerated; or accumulated, stored, or treated before or in lieu of these activities. Certain recycled materials are also considered wastes. Solid wastes are often referred to simply as "wastes." For the complete definition of a "solid waste," please refer to 30 TAC Section 335.1 (Solid Waste).

Specific industrial solid waste (30 TAC Section 335.508)—A nonhazardous waste for which specific classification criteria and/or a form code have been established.

Stabilized wastes (30 TAC Section 335.508)—Wastes that originally exhibit hazardous characteristics can be *stabilized* so that they are no longer hazardous and can meet the criteria for classification as Class 1 or 2 nonhazardous industrial waste. For example a waste containing lead that exhibits the hazardous characteristic of toxicity can be stabilized by mixing with cement in the proper proportion to reduce the toxicity or mobility of contaminants. Depending on the process(es) used, stabilization achieves varying degrees of long-term effectiveness.

Synthetic oils—Oils not derived from crude oil, including those derived from shale, coal, or a polymer-based starting material; and nonpolymeric synthetic fluids that are used as hydraulic fluids and heat transfer fluids, such as those based on phosphate esters, diphenyl oxide, or alkylated benzenes. Synthetic oils are generally used for the same purpose as oils, and they present relatively the same level of hazardousness after use.

TAC—Texas Administrative Code. Title 30 of TAC contains TCEQ rules on industrial solid waste and municipal hazardous waste, among other subjects.

TSDF—Treatment, storage, and disposal facilities.

Universal Waste (30 TAC Section 335.261 and 40 CFR Part 273)—This rule covers five types of waste:

- all hazardous waste batteries as described in 40 CFR 273.2;
- mercury-containing thermostats as described in 40 CFR 273.4;
- some hazardous waste pesticides as described in 40 CFR 273.3;
- paint and paint-related waste as described in §335.262(b);
- lamps as described in 40 CFR §273.5, and §335.261(b)(16)(F).

The rule establishes a reduced set of regulatory requirements for facilities managing universal waste, depending on whether the facility falls into one of four categories:

- small-quantity handler of universal waste (SQHUW),
- large-quantity handler of universal waste (LQHUW),
- transporter of universal waste, or
- final destination facilities.

In addition, the rules establish a petitioning procedure whereby additional wastes may be added to the universal waste rule.

U.S.C.A.—*United States Code Annotated.*

Used oil (30 TAC Section 335.1, 30 TAC Section 324 (relating to used oil), and 40 CFR Part 279 (relating to standards for management of used oil)[2]—Any oil refined from crude oil, or any synthetic oil, that has been used and, from such use, is contaminated by physical or chemical impurities and cannot be used for its intended purpose (that is, it is a spent material).

Used oil fuel includes any fuel produced from used oil by processing, blending, or other treatment.

Waste—Unwanted materials left over from a manufacturing process; refuse from places of human or animal habitation.

Waste code—Also referred to as Texas waste code (30 TAC Section 335.503)—This 8-digit code identifies a waste stream. The first 4 digits are the ***sequence number***, the next 3 digits are the ***form code***, and the last digit is the waste's ***classification*** (sequence number + form code + classification code = waste code). (Some of the "digits" referred to here actually may be letters or a combination of letters and numbers.)

Waste matrices—Water and soil or sediment in which a waste is found.

[2]Rules applicable to nonhazardous used oil, are found in Chapter 324, state regulations on recyclable used oil, and 40 CFR Part 279, federal regulations on used oil recycling.

Wastes generated out-of-state (30 TAC Section 335.508)—All nonhazardous industrial waste generated outside the state of Texas and transported into or through Texas for processing, storage, or disposal is classified as Class 1 unless the waste satisfies the Class 2 or 3 criteria as defined in 30 TAC Sections 335.506–8. A Class 2 or 3 waste determination, accompanied by all supporting process knowledge and analytical data, must be submitted to the TCEQ for approval.

Waste stream (30 TAC Section 335.503)—The total flow of solid waste from homes, businesses, institutions, and manufacturing plants that is recycled, burned, or disposed of in landfills; or segments of that total flow, such as the "residential waste stream" or the "recyclable waste stream." (It should be noted that the terms "waste stream", "solid waste", and "waste" are often used interchangeably by federal and state regulators as well as many members of the regulated community).

EPAPA011000257

Appendix A

Hazardous Substances

Applicability: **Empty Container Class 2 Evaluations**

The following is a listing of materials identified as hazardous substances (40 CFR Table 302.4) in effect at the time of this guideline's printing. (As amended at 57 FR 61492, Dec. 24, 1992; 58 FR 35314, June 30, 1993; 59 FR 31551, June 20, 1994; 60 FR 7824 Feb. 9, 1995). CAS numbers of the materials are also provided.

Hazardous Substance	CAS Number
Acenaphthene	83329
Acenaphthylene	208968
Acetaldehyde	75070
Acetaldehyde, chloro-	107200
Acetaldehyde, trichloro-	75876
Acetamide, N-(aminothioxomethyl)-	591082
Acetamide, N-9H-fluoren-2-yl-	53963
Acetic acid	64197
Acetic acid (2,4-dichlorophenoxy)-	94757
Acetic anhydride	108247
Acetone	67641
Acetone cyanohydrin	75865
Acetonitrile	75058
Acetophenone	98862
2-Acetylaminofluorene	53963
Acetyl bromide	506967
Acetyl chloride	75365
1-Acetyl-2-thiourea	591082
Acrolein	107028
Acrylamide	79061
Acrylic acid	79107
Acrylonitrile	107131
Adipic acid	124049
Aldicarb	116063
Aldicarb sulfone	1646884
Aldrin	309002
Allyl alcohol	107186
Allyl chloride	107051
Aluminum phosphide	20859738
Aluminum sulfate	10043013
Ametycin (7-amino-9-a-methoxymitosane)	50077
5-(Aminomethyl)-3-isoxazolol	2763964
4-Aminopyridine	504245
Amitrole	61825
Ammonia	7664417
Ammonium acetate	631618
Ammonium benzoate	1863634
Ammonium bicarbonate	1066337
Ammonium bichromate	7789095
Ammonium bifluoride	1341497
Ammonium bisulfite	10192300
Ammonium carbamate	1111780
Ammonium carbonate	506876
Ammonium chloride	12125029
Ammonium chromate	7788989
Ammonium citrate, dibasic	3012655
Ammonium fluoborate	13826830
Ammonium fluoride	12125018
Ammonium hydroxide	1336216
Ammonium oxalate	6009707
Ammonium picrate	131748
Ammonium silicofluoride	16919190
Ammonium sulfamate	7773060
Ammonium sulfide	12135761
Ammonium sulfite	10196040
Ammonium tartrate	14307438
Ammonium thiocyanate	1762954
Ammonium vanadate	7803556
Amyl acetate	628637
iso-	123922
sec-	626380
tert-	625161
Aniline	62533
Anthracene	120127
Antimony	7440360
Antimony pentachloride	7647189
Antimony potassium tartrate	28300745
Antimony tribromide	7789619
Antimony trichloride	10025919
Antimony trifluoride	7783564
Antimony trioxide	1309644
Aroclor 1016	12674112
Aroclor 1221	11104282
Aroclor 1232	11141165
Aroclor 1242	53469219
Aroclor 1248	12672296
Aroclor 1254	11097691
Aroclor 1260	11096825
Arsenic	7440382
Arsenic acid H_3AsO_4	1327522
Arsenic disulfide	1303328
Arsenic pentoxide, As_2O_5	1303282
Arsenic trichloride	7784341
Arsenic trioxide, As_2O_3	1327533
Arsenic trisulfide	1303339
Arsinic acid, dimethyl-	75605
Asbestos	1332214
Auramine	492808

Appendix A—Hazardous Substances

Hazardous Substance	CAS Number
Azaserine	115026
1H-Azepine-1-carbothioic acid, hexahydro-, S-ethyl ester	2212671
Aziridine, 2-methyl	75558
Barium cyanide	542621
Benz[c]acridine	225514
Benzanthracene	56553
Benz[a]anthracene	57976
Benzene	71432
Benzene, dichloromethyl-	98873
Benzene, 2,6-diisocyanato-1-methyl-	91087
Benzene, m-dimethyl	108383
Benzene, o-dimethyl	95476
Benzene, p-dimethyl	106423
Benzenesulfonic acid chloride	98099
Benzene, (trichloromethyl)	98077
Benzidine	92875
Benzo[a]anthracene	56553
1,3-Benzodioxol-4-ol, 2,2-dimethyl-, (Bendiocarb phenol)	22961826
1,3-Benzodioxol-4-ol, 2,2-dimethyl-, methyl carbamate (Bendiocarb)	22781233
Benzo[b]fluoranthene	205992
Benzo(k)fluoranthene	207089
Benzoic acid	65850
Benzoic acid, 2-hydroxy-, compound with (3aS-cis)-1,2,3,3a,8,8a-hexahydro-1,3a,8-trimethylpyrrolo-[2,3-b]indol- 5-yl methylcarbamate ester (1:1) (Physostigmine salicylate)	57647
Benzonitrile	100470
Benzo[rst]pentaphene	189559
Benzo[ghi]perylene	191242
Benzo[a]pyrene	50328
p-Benzoquinone	106514
Benzotrichloride	98077
Benzoyl chloride	98884
Benzyl chloride	100447
Beryllium chloride	7787475
Beryllium powder	7440417
Beryllium fluoride	7787497
Beryllium nitrate	13597994
alpha-BHC	319846
beta-BHC	319857
delta-BHC	319868
2,2'-Bioxirane	1464535
Bis(2-chloroethyl) ether	111444
Bis(2-chloroethoxy)methane	111911
Bis(dimethylthiocarbamoyl) sulfide	97745
Bis(2-ethylhexyl) phthalate	117817
Bromoacetone	598312
Bromoform	75252
4-Bromophenyl phenyl ether	101553
Brucine	357573
1-Butanol	71363
2-Butenal	123739

Hazardous Substance	CAS Number
Butyl acetate	123864
iso-	110190
sec-	105464
tert-	540885
n-Butyl alcohol	71363
Butylamine	109739
iso-	78819
sec-	513495
sec-	13952846
tert-	75649
Butyl benzyl phthalate	85687
Butyric acid	107926
iso-Butyric acid	79312
Cadmium	7440439
Cadmium acetate	543908
Cadmium bromide	7789426
Cadmium chloride	10108642
Calcium arsenate	7778441
Calcium arsenite	52740166
Calcium carbide	75207
Calcium chromate	13765190
Calcium cyanide $Ca(CN)_2$	592018
Calcium dodecylbenzenesulfonate	26264062
Calcium hypochlorite	7778543
Captan	133062
Carbamic acid, butyl-, 3-iodo-2-n-butylcarbamate)	55406536
Carbamic acid, [1-[(butylamino)carbonyl]-1H-benzimidazol-2-yl, methyl ester (Benomyl)	17804352
Carbamic acid, 1H-benzimidazol-2-yl, methyl ester	10605217
Carbamic acid, (3-chlorophenyl)-, 4-chloro-2-butynyl ester	101279
Carbamic acid, dimethyl-,1-[(dimethylamino)carbonyl]-5-methyl-1H-pyrazol-3-yl ester	644644
Carbamic acid, dimethyl-, 3-methyl-1-(1-methylethyl)-1H-pyrazol-5-yl ester	119380
Carbamic acid, methyl-, 3-methylphenyl ester	1129415
Carbamic acid, [1,2-phenylenebis-(iminocarbonothioyl)]bis-, dimethyl ester	23564058
Carbamic acid, phenyl-, 1-methylethyl ester (Propham)	122429
Carbamic acid, methylnitroso-, ethyl ester	615532
Carbamic chloride, dimethyl-	79447
Carbamodithioic acid, dibutyl-, sodium salt	136301
Carbamodithioic acid, diethyl-, 2-chloro-2-propenyl ester	95067
Carbamodithioic acid, diethyl-, sodium salt	148185
Carbamodithioic acid, dimethyl-, potassium salt	128030

Hazardous Substance	CAS Number
Carbamodithioic acid, dimethyl-, sodium salt	128041
Carbamodithioic acid, dimethyl-, tetraanhydrosulfide with orthothioselenious acid	144343
Carbamodithioic acid, (hydroxymethyl)methyl-, monopotassium salt	51026289
Carbamodithioic acid, methyl-, monopotassium salt	137417
Carbamodithioic acid, methyl-, monosodium salt	137428
Carbamothioic acid, bis(1-methylethyl)-, S-(2,3,3-trichloro -2-propenyl) ester	2303175
Carbamothioic acid, bis(2-methylpropyl)-, S-ethyl ester	2008415
Carbamothioic acid, butylethyl-, S-propyl ester	1114712
Carbamothioic acid, cyclohexylethyl-, S-ethyl ester	1134232
Carbamothioic acid, dipropyl-, S-ethyl ester (EPTC)	759944
Carbamothioic acid, dipropyl-, S-(phenylmethyl) ester	52888809
Carbamothioic acid, dipropyl-, S-propyl ester	1929777
Carbaryl	63252
Carbofuran	1563662
Carbofuran, phenol	1563388
Carbosulfan	55285148
Carbon disulfide	75150
Carbon oxyfluoride	353504
Carbon tetrachloride	56235
Chlorambucil	305033
Chlordane	57749
Chlorine	7782505
Chlornaphazine	494031
p-Chloroaniline	106478
Chlorobenzene	108907
Chlorobenzilate	510156
p-Chloro-m-cresol	59507
Chlorodibromomethane	124481
Chloroethane	75003
2-Chloroethyl vinyl ether	110758
Chloroform	67663
Chloromethyl methyl ether	107302
2-Chloronaphthalene	91587
2-Chlorophenol	95578
4-Chlorophenyl phenyl ether	7005723
3-Chloropropionitrile	542767
Chlorosulfonic acid	7790945
4-Chloro-o-toluidine, hydrochloride	3165933
Chlorpyrifos	2921882
Chromic acetate	1066304
Chromic acid	11115745
Chromic sulfate	10101538
Chromium	7440473
Chromous chloride	10049055

Hazardous Substance	CAS Number
Chrysene	218019
Cobaltous bromide	7789437
Cobaltous formate	544183
Cobaltous sulfamate	14017415
Copper	7440508
Copper, dimethyldithiocarbamate	137291
Copper cyanide CuCN	544923
Coumaphos	56724
Creosote	8001589
Cresol(s)	1319773
m-Cresol	108394
o-Cresol	95487
p-Cresol	106445
Cumene	98828
Cupric acetate	142712
Cupric acetoarsenite	12002038
Cupric chloride	7447394
Cupric nitrate	3251238
Cupric oxalate	5893663
Cupric sulfate	7758987
Cupric sulfate, ammoniated	10380297
Cupric tartrate	815827
Cyanides	57125
Cyanogen	460195
Cyanogen bromide (CN)Br	506683
Cyanogen chloride	506774
Cyclohexane	110827
Cyclohexanone	108941
2-Cyclohexyl-4,6-dinitrophenol	131895
Cyclophosphamide	50180
2,4-D Acid	94757
2,4-D (isopropyl) Esters	94111
	94791
	94804
	1320189
	1928387
	1928616
Butoxyethl	1929733
	2971382
Isooctyl	25168267
Dichlorophenoxyaceticacid-polyproxybutyl	53467111
Daunomycin	20830813
DDD	72548
DDE	72559
DDT	50293
Diallate	2303164
Diazinon	333415
Dibenzo[a,h]anthracene	53703
1,2-Dibromo-3-chloropropane	96128
Dibutylnitrosoamine	924163
Di-n-butyl phthalate	84742
Dicamba	1918009
Dichlobenil	1194656
Dichlone	117806
Dichlorobenzene	25321226
1,2-Dichlorobenzene	95501
1,3-Dichlorobenzene	541731
1,4-Dichlorobenzene	106467
3,3'-Dichlorobenzidine	91941

Appendix A—Hazardous Substances

Hazardous Substance	CAS Number
Dichlorobromomethane	75274
1,4-Dichloro-2-butene	764410
Dichlorodifluoromethane	75718
1,1-Dichloroethane	75343
1,2-Dichloroethane	107062
1,1-Dichloroethylene	75354
1,2-Dichloroethylene	156605
Dichloroethyl ether	111444
Dichloroisopropyl	108601
Dichloromethoxyethane	111911
Dichloromethyl ether	542881
2,4-Dichlorophenol	120832
2,6-Dichlorophenol	87650
Dichlorophenylarsine	696286
Dichloropropane	26638197
1,1-Dichloropropane	78999
1,3-Dichloropropane	142289
1,2-Dichloropropane	78875
Dichloropropane	8003198
Dichloropropene	26952238
2,3-Dichloropropene	78886
1,3-Dichloropropene	542756
2,2-Dichloropropionic acid	75990
Dichlorvos	62737
Dicofol	115322
Dieldrin	60571
Diethylamine	109897
Diethylarsine	692422
1,4-Diethylenedioxide	123911
O,O-Diethyl S-methyl dithiophosphate	3288582
Diethyl-p-nitrophenyl phosphate	311455
Diethyl-o-phthalate	84662
O,O-Diethyl O-pyrazinyl phosphorothioate	297972
Diethylstilbestrol	56531
Dihydrosafrole	94586
Diisopropylfluorophosphate	55914
3,3'-Dimethoxybenzidine	119904
Dimethylamine	124403
p-Dimethylamino-azobenzene	60117
3,3'-Dimethylbenzidine	119937
1,1-Dimethylhydrazine	57147
1,2-Dimethylhydrazine	540738
alpha,alpha-Dimethylphenethylamine	122098
2,4-Dimethylphenol	105679
Dimethyl phthalate	131113
Dimethyl sulfate	77781
Dinitrobenzene (mixed)	25154545
m-Dinitrobenzene	99650
o-Dinitrobenzene	528290
p-Dinitrobenzene	100254
4,6-Dinitro-o-cresol and salts	534521
Dinitrophenol	25550587
2,5-Dinitrophenol	329715
2,6-Dinitrophenol	573568
2,4-Dinitrophenol	51285
Dinitrotoluene	25321146
3,4-Dinitrotoluene	610399
2,4-Dinitrotoluene	121142
2,6-Dinitrotoluene	606202
Dinoseb	88857
Di-n-octyl phthalate	117840
1,2-Diphenylhydrazine	122667
Diphosphoramide, octamethyl-	152169
Diphosphoric acid, tetraethyl ester	107493
Dipropylamine	142847
Di-n-propylnitrosamine	621647
Diquat	85007
Disulfoton	298044
Dithiobiuret	541537
1,3-Dithiolane-2-carboxaldehyde, 2,4-dimethyl-, O-[(methylamino) carbonyl]oxime (Tirpate)	26419738
Diuron	330541
Dodecylbenzenesulfonic acid	27176870
Endosulfan	115297
alpha-Endosulfan	959988
beta-Endosulfan	33213659
Endosulfan sulfate	1031078
Endothall	145733
Endrin & metabolites	72208
Endrin aldehyde	7421934
Epichlorohydrin	106898
Epinephrine	51434
Ethanimidiothioic acid, 2-(dimethylamino-N-hydroxy-2-oxo-, methyl ester (A2213)	30558431
Ethanimidiothioic acid, 2-(dimethylamino)-N-[[(methylamino) carbonyl]oxy]-2-oxo-, methyl ester (Oxamyl)	23135220
Ethanimidothioic acid, N,N'-[thiobis[(methylimino) carbonyloxy]] bis-, dimethyl ester (Thiodicarb)	59669260
Ethanol, 2,2'-oxybis-, dicarbamate (Diethylene glycol, dicarbamate)	5952261
Ethion	563122
Ethyl acetate	141786
Ethyl acrylate	140885
Ethylbenzene	100414
Ethyl carbamate	51796
Ethyl cyanide	107120
Ethylenebisdithiocarbamic acid, salts & esters	111546
Ethylenediamine	107153
Ethylenediamine-tetraacetic acid (EDTA)	60004
Ethylene dibromide	106934
Ethylene glycol monoethyl ether	110805
Ethylene oxide	75218
Ethylenethiourea	96457
Ethylenimine	151564

EPAPA011000261

Appendix A—Hazardous Substances

Hazardous Substance	CAS Number
Ethyl ether	60297
Ethyl methacrylate	97632
Famphur	52857
Ferric ammonium citrate	1185575
Ferric ammonium oxalate	2944674
Ferric chloride	7705080
Ferric fluoride	7783508
Ferric nitrate	10421484
Ferric sulfate	10028225
Ferrous ammonium sulfate	10045893
Ferrous chloride	7758943
Ferrous sulfate	7720787
Fluoranthene	206440
Fluorene	86737
Fluorine	7782414
Fluoroacetamide	640197
Fluoroacetic acid, sodium salt	62748
Formaldehyde	50000
Formic acid	64186
Fumaric acid	110178
Furan	110009
Furfural	98011
Glauramine	492808
Glycidylaldehyde	765344
Guanidine, N-methyl-N'-nitro-N-nitroso-	70257
Guthion	86500
Heptachlor	76448
Heptachlor epoxide	1024573
Hexachlorobenzene	118741
Hexachlorobutadiene	87683
Hexachlorocyclohexane (all isomers)	608731
Hexachlorocyclohexane (gamma isomer - Lindane)	58899
Hexachlorocyclopentadiene	77474
Hexachloroethane	67721
Hexachlorophene	70304
Hexachloropropene	1888717
Hexaethyl tetraphosphate	757584
Hydrazine	302012
Hydrazine, 1,2-diethyl-	1615801
Hydrochloric acid	7647010
Hydrocyanic acid	74908
Hydrofluoric acid	7664393
Hydrogen sulfide H_2S	7783064
Hydroperoxide, 1-methyl-1-phenylethyl	80159
Indeno(1,2,3-cd)pyrene	193395
Iron, tris (dimethylcarbamodithioato-S,S')-	14484641
Isobutyl alcohol	78831
Isodrin	465736
Isophorone	78591
Isoprene	78795
Isopropanolamine dodecylbenzenesulfonate	42504461
Isosafrole	120581
3(2H)-Isoxazolone, 5-(aminomethyl)-	2763964
Kepone	143500
Lasiocarpine	303344
Lead	7439921
Lead acetate	301042
Lead arsenate	7784409
Lead chloride	7758954
Lead fluoborate	13814965
Lead fluoride	7783462
Lead iodide	10101630
Lead nitrate	10099748
Lead phosphate	7446277
Lead stearate	7428480
Lead subacetate	1335326
Lead sulfate	15739807
Lead sulfide	1314870
Lead thiocyanate	592870
Lithium chromate	14307358
Malathion	121755
Maleic acid	110167
Maleic anhydride	108316
Maleic hydrazide	123331
Manganese dimethyldithiocarbamate	15339363
Melphalan	148823
Mercaptodimethur	2032657
Mercuric cyanide	592041
Mercuric nitrate	10045940
Mercuric sulfate	7783359
Mercuric thiocyanate	592858
Mercurous nitrate	10415755
Mercury	7439976
Mercury fulminate	628864
Methacrylonitrile	126987
Methanesulfonic acid, ethyl ester	62500
Methanimidamide, N,N-dimethyl-N'-[3-[[(methylamino)carbonyl]oxylphenyl]-, monohydrochloride	23422539
Methanimidamide, N,N-dimethyl-N'-[2-methyl-4-[[(methylamino)carbonyl]oxy]phenyl]-	17702577
Methanol	67561
Methapyrilene	91805
Methomyl	16752775
Methoxychlor	72435
Methyl bromide	74839
1-Methylbutadiene	504609
Methyl chloride	74873
Methyl chlorocarbonate	79221
3-Methylcholanthrene	56495
4,4'-Methylene(bis)chloroaniline	101144
Methylene bromide	74953
Methylene chloride	75092
Methyl ethyl ketone (MEK)	78933
Methyl ethyl ketone peroxide	1338234
Methyl hydrazine	60344
Methyl iodide	74884
Methyl isobutyl ketone	108101
Methyl isocyanate	624839
Methylmercaptan	74931
Methyl methacrylate	80626
Methyl parathion	298000

Hazardous Substance	CAS Number
Methylthiouracil	56042
Mevinphos	7786347
Mexacarbate	315184
Mitomycin C	50077
Monoethylamine	75047
Monomethylamine	74895
Naled	300765
1-Naphthalenamine	134327
2-Naphthalenamine	91598
Naphthalene	91203
1,4-Naphthalenedione	130154
Naphthenic acid	1338245
alpha-Naphthylthiourea	86884
Nickel	7440020
Nickel ammonium sulfate	15699180
Nickel carbonyl	13463393
Nickel chloride	7718549
Nickel cyanide $Ni(CN)_2$	557197
Nickel hydroxide	12054487
Nickel nitrate	14216752
Nickel sulfate	7786814
Nicotine, & salts	54115
Nitric acid	7697372
p-Nitroaniline	100016
Nitrobenzene	98953
Nitrogen dioxide NO_2	10102440
Nitrogen oxide NO	10102439
Nitroglycerine	55630
Nitrophenol (mixed)	25154556
m-Nitrophenol	554847
o-Nitrophenol	88755
p-Nitrophenol	100027
2-Nitropropane	79469
N-Nitrosodiethanolamine	1116547
N-Nitrosodiethylamine	55185
N-Nitrosodimethylamine	62759
N-Nitrosodiphenylamine	86306
N-Nitrosopyrrolidine	930552
Nitrotoluene	1321126
m-Nitrotoluene	99081
o-Nitrotoluene	88722
p-Nitrotoluene	99990
5-Nitro-o-toluidine	99558
Osmium tetroxide OsO_4	20816120
Paraformaldehyde	30525894
Paraldehyde	123637
Parathion	56382
Pentachlorobenzene	608935
Pentachloroethane	76017
Pentachloronitrobenzene	82688
Pentachlorophenol	87865
Perchloroethylene	127184
Phenacetin	62442
Phenanthrene	85018
Phenol	108952
Phenol, 3-(1-methylethyl)-, methyl carbamate (m-Cumenyl methylcarbamate)	64006
Phenol, 3-methyl-5-(1-methylethyl)-, methyl carbamate (Promecarb)	26313[illegible]
Phenylmercury acetate	6238
Phenylthiourea	10385
Phorate	29802[illegible]
Phosgene	7544[illegible]
Phosphine	7803512
Phosphoric acid	7664382
Phosphorodithioic acid, O,O-dimethyl S-[2(methylamino)-2-oxoethyl] ester	60515
Phosphorus	7723140
Phosphorus oxychloride	10025873
Phosphorus pentasulfide	1314803
Phosphorus trichloride	7719122
Phthalic anhydride	85449
Piperidine, 1-nitroso-	100754
Piperidine, 1,1'-(tetrathiodicarbonothioyl)bis-(Bis(pentamenthylene)thiuram tetrasulfide)	120547
Polychlorinated biphenyls (PCBs)	1336363
Aroclor 1016	12674112
Aroclor 1221	11104282
Aroclor 1232	11141165
Aroclor 1242	53469219
Aroclor 1248	12672296
Aroclor 1254	11097691
Aroclor 1260	11096825
Potassium arsenate	7784410
Potassium arsenite	10124502
Potassium bichromate	7778509
Potassium chromate	7789006
Potassium cyanide KCN	151508
Potassium hydroxide	1310583
Potassium permanganate	7722647
Potassium silver cyanide	506616
Pronamide	23950585
1,3-Propane sultone	1120714
Propanedinitrile	109773
Propargite	2312358
Propargyl alcohol	107197
Propionic acid	79094
Propionic anhydride	123626
n-Propylamine	107108
Propylene oxide	75569
Pyrene	129000
Pyrethrins	121299
Pyridine	110861
Pyridine, 2-methyl-	109068
Pyrrolo[2,3-b] indol-5-ol, 1,2,3,3a,8,8a-hexahydro-1,3a,8-trimethyl-, methylcarbamate (ester), (3aS-cis)-Physostigmine	57476
Quinoline	91225
Reserpine	50555
Resorcinol	108463
Saccharin and salts	81072

EPAPA011000263

Appendix A—Hazardous Substances

Hazardous Substance	CAS Number
Safrole	94597
Selenious acid	7783008
Selenium	7782492
Selenium dioxide	7446084
Selenium sulfide SeS_2	7488564
Selenourea	630104
Silver	7440224
Silver cyanide AgCN	506649
Silver nitrate	7761888
Silvex (2,4,5-TP)	93721
Sodium	7440235
Sodium arsenate	7631892
Sodium arsenite	7784465
Sodium azide	26628228
Sodium bichromate	10588019
Sodium bifluoride	1333831
Sodium bisulfite	7631905
Sodium chromate	7775113
Sodium cyanide NaCN	143339
Sodium dodecyl-benzenesulfonate	25155300
Sodium fluoride	7681494
Sodium hydrosulfide	16721805
Sodium hydroxide	1310732
Sodium hypochlorite	7681529
Sodium methylate	124414
Sodium nitrite	7632000
Sodium phosphate, dibasic	7558794
Sodium phosphate, tribasic	7601549
Sodium selenite	10102188
Streptozotocin	18883664
Strontium chromate	7789062
Strychnine, & salts	57249
Styrene	100425
Sulfur monochloride	12771083
Sulfuric acid	7664939
2,4,5-T acid	93765
2,4,5-T amines	2008460
	1319728
	3813147
	6369966
	6369977
2,4,5-T (n-butyl) esters	93798
	1928478
	2545597
Isooctyl	25168154
Methylpropyl	61792072
2,4,5-T salts	13560991
1,2,4,5-Tetrachlorobenzene	95943
2,3,7,8-Tetrachloro-dibenzo-p-dioxin (TCDD)	1746016
1,1,1,2-Tetrachloroethane	630206
1,1,2,2-Tetrachloroethane	79345
2,3,4,6-Tetrachlorophenol	58902
Tetraethyllead	78002
Tetraethyldithiopyrophosphate	3689245
Tetrahydrofuran	109999
Tetranitromethane	509148
Thallium	7440280

Hazardous Substance	CAS Number
Thallium(I) acetate	563688
Thallium(I) carbonate	6533739
Thallium chloride TlCl	7791120
Thallium(I) nitrate	10102451
Thallium oxide Tl_2O_3	1314325
Thallium selenite	12039520
Thallium(I) sulfate	7446186
2H-1,3,5-Thiadiazine-2-thione, tetrahydro-3,5-dimethyl- (Dazomet)	533744
Thioacetamide	62555
Thiofanox	39196184
Thioperoxydicarbonic diamide, tetrabutyl (Tetrabutylthiuram disulfide)	1634022
Thioperoxydicarbonic diamide, tetraethyl (Disulfiram)	97778
Thiophenol	108985
Thiosemicarbazide	79196
Thiourea	62566
Thiourea, (2-chlorophenyl)-	5344821
Thiram	137268
Toluene	108883
Toluenediamine	95807
Toluene diisocyanate	584849
o-Toluidine	95534
p-Toluidine	106490
o-Toluidine hydrochloride	636215
Toxaphene	8001352
2,4,5-TP esters	32534955
Trichlorfon	52686
1,2,4-Trichlorobenzene	120821
1,1,1-Trichloroethane	71556
1,1,2-Trichloroethane	79005
Trichloroethene (Trichloroethylene)	79016
Trichloromethanesulfenyl chloride	594423
Trichloromonofluoromethane	75694
Trichlorophenol	25167822
2,3,4-Trichlorophenol	15950660
2,3,5-Trichlorophenol	933788
2,3,6-Trichlorophenol	933755
3,4,5-Trichlorophenol	609198
2,4,5-Trichlorophenol	95954
2,4,6-Trichlorophenol	88062
Triethanolamine dodecylbenzenesulfonate	27323417
Triethylamine	121448
Trimethylamine	75503
1,3,5-Trinitrobenzene	99354
Tris(2,3-dibromopropyl)phosphate	126727
Trypan blue	72571
Uracil mustard	66751
Uranyl acetate	541093
Uranyl nitrate	10102064
Urea, N-ethyl-N-nitroso-	759739
Urea, N-methyl-N-nitroso-	684935
Vanadium pentoxide	1314621
Vanadyl sulfate	27774136
Vinyl chloride	75014
Vinyl acetate	108054

Appendix A—Hazardous Substances

Hazardous Substance	CAS Number
Vinylamine, N-methyl-N-nitroso-	4549400
Warfarin, and salts, when present at concentrations greater than 0.3%	81812
Xylene (mixed)	1330207
Xylenol	1300716
Zinc	7440666
Zinc acetate	557346
Zinc ammonium chloride	52628258
Zinc, bis(dimethyl carbomodithioato-S,S')- (Ziram)	137304
Zinc, bis(diethylcarbamo dithioato-S,S')- (Ethyl Ziram)	14324551
Zinc borate	1332076
Zinc bromide	7699458
Zinc carbonate	3486359
Zinc chloride	7646857
Zinc cyanide $Zn(CN)_2$	557211
Zinc fluoride	7783495
Zinc formate	557415
Zinc hydrosulfite	7779864
Zinc nitrate	7779886
Zinc phenolsulfonate	127822
Zinc phosphide Zn_3P_2, when present at concentrations greater than 10%	1314847
Zinc silicofluoride	16871719
Zinc sulfate	7733020
Zirconium nitrate	13746899
Zirconium potassium fluoride	16923958
Zirconium sulfate	14644612
Zirconium tetrachloride	10026116

Appendix B

Ignitable Solids

(30 TAC Chapter 335 Subchapter R Appendix I Table 2)

Constituents listed from Department of Transportation Regulations, 49 CFR Part 173 Subpart E, October 1, 1993. Note: The presence of a constituent on this table in a nonhazardous waste does not automatically identify that waste as a Class 1 ignitable waste. The constituents on this table are examples of materials which could be considered Class 1 ignitable waste. The physical characteristics of the waste will be the determining factor as to whether or not a waste is ignitable. Refer to 30 TAC §335.505(2) (relating to Class 1 Waste Determination) for the Class 1 ignitable criteria.

Compound or Material	Compound or Material
Aluminum, metallic, powder	Calcium silicide
Alkali metal amalgams	Camphor, synthetic
Alkali metal amides	Carbon, activated
Aluminum alkyl halides	Celluloid
Aluminum alkyl hydrides	Cerium
Aluminum alkyls	Cesium metal
Aluminum borohydrides	Chromic acid or chromic acid mixture, dry
Aluminum carbide	Cobalt naphthenates, powder
Aluminum ferrosilicon powder	Cobalt resinate
Aluminum hydride	Decaborane
Aluminum phosphide	2-Diazo-1-naphthol-4-sulphochloride
Aluminum resinate	2-Diazo-1-naphthol-5-sulphochloride
Aluminum silicon powder	2,5-Diethoxy-4-morpholinobenzene-diazonium zinc choride
Ammonium picrate	Diethylzinc
2,2'-Azodi(2,4-dimethyl-4-methoxyvaleronitrile)	4-Dimethylamino-6-(2-dimethyaminoethoxy)-toluene-2-diazonium zinc chloride
2, 2'-Azodi(2,4-dimethylvaleronitrile)	Dimethylzinc
1, 1' Azodi(hexahydrobenzonitrile)	Dinitrophenolates
2,2'-Azodi(2-methyl-butryronitrile)	Dinitroresorcinol
Azodiisobutryonitrile	N,N'-Dinitroso-N,N'-dimethylterephthalamide
Barium, metallic	N,N'-Dinitrosopentamethylenetetramine
Barium alloys, pyrophoric	Diphenyloxide-4,4'-disulfohydrazide
Barium azide	Dipicryl sulfide
Benzene-1,3-disulfohydrazide	4-Dipropylaminobenzenediazonium zinc chloride
Benzene sulfohydrazide	Ferrocerium
4-(Benzyl(ethly)amino)-3-ethoxy-benzenediazonium zinc chloride	Ferrosilicon
4-(Benzyl(methyl)amino)-3-ethoxy-benzenediazonium zinc chloride	Ferrous metal
Borneol	Hafnium powder
Boron trifluoride dimethyl etherate	Hexamine
5-tert-Butyl-2,4,6-trinitro-m-xylene	Hydrides, metal
Calcium, metallic	3-(2-Hydroxyethoxy)-4-pyrrolidin-1-ylbenzenediazonium zinc chloride
Calcium carbide	Iron oxide, spent
Calcium chlorite	Isosorbide dinitrate mixture
Calcium cyanamide	Lead phosphite, dibasic
Calcium dithionite	Lithium acetylide-ethylene diamine complex
Calcium hypochlorite	Lithium alkyls
Calcium manganese silicon	Lithium aluminum hydride
Calcium silicon powder	Lithium amide, powdered
Calcium phosphide	Lithium borohydride
Calcium pyrophoric	Lithium ferrosilicon
Calcium resinate	

Appendix B—Ignitable Solids

Compound or Material	Compound or Material
Lithium hydride	Silicon powder, amorphous
Lithium metal	Silver picrate
Lithium nitride	Sodium, metallic
Lithium silicon	Sodium aluminum hydride
Magnesium granules	Sodium amide
Magnesium aluminum phosphide	Sodium borohydride
Magnesium diamide	Sodium chlorite
Magnesium phosphide	Sodium2-diazo-1-naphthol-4-sulphonate
Magnesium silicide	Sodium2-diazo-1-naphthol-5-sulphonate
Maneb	Sodium dichloro-s-triazinetrione
Manganese resinate	Sodium dinitro-ortho-cresolate
Methyl magnesium bromide	Sodium hydride
Methyldichlorosilane	Sodium hydrosulfite
Mono-(trichloro)tetra(monopotassium dichloro)-penta-s-triazinetrione	Sodium methylate
N-Methyl-N′-nitronitrosoguanidine	Sodium nitrite and mixtures
Naphthalene	Sodium picramate, wet
Nitrocellulose mixtures	Sodium potassium alloys
Nitroguanidine	Sodium sulfide, anhydrous
p-Nitrosodimethylaniline	Stannic phosphide
Paraformaldehyde	Strontium phosphide
Pentaborane	Sulfur
Peratic acid	Titanium metal powder
Phosphorous, amorphous, red	Titanium hydride
Phosphorous, white or yellow	Trichloroisocyanuric acid
Phosphoric anhydride	Trichlorosilane
Phosphorous pentachloride	Trichloro-s-triazinetrione
Phosphorus pentasulfide	Trinitrobenzoic acid
Phosphorus sesquisulfide	Trinitrophenol
Phosphorus trisulfide	Trinitrotoluene
Picric acid	Urea nitrate
Potassium, metallic	Zinc ammonium nitrite
Potassium dichloro-s-triazinetrione	Zinc phosphide
Potassium borohydride	Zinc powder
Potassium dithionite	Zinc resinate
Potassium phosphide	Zirconium hydride, powdered
Potassium sulfide, anhydrous	Zirconium picramate
Rubidium metal	Zirconium powder
	Zirconium scrap

EPAPA011000267

Appendix C

Class 1 Toxic Constituents' Maximum Leachable Concentrations

(30 TAC Chapter 335 Subchapter R Appendix 1 Table I)

Applicability: **Class 1, 2, and 3 Waste Evaluations**

Values are based on information contained in Federal Registers Vol. 55 / Friday, July 27, 1990; Vol. 56 / June 7, 1991; and Integrated Risk Information Systems. Environmental Protection Agency, and 40 CFR 264 Appendix 9.

Compound	CAS No.	Concentration (mg/l)	Compound	CAS No.	Concentration (mg/l)
Acenaphthene	83-32-9	210	3,3-Dichlorobenzidine	91-94-1	0.8
Acetone	67-64-1	400	1,2-Dichloroethane	107-06-2	0.50
Acetonitrile	75-05-8	20	Dichlorodifluoromethane	75-71-8	700
Acetophenone	98-86-2	400	1,1-Dichloroethylene	75-35-4	0.6
Acrylamide	79-06-1	0.08	1,3-Dichloropropene	542-75-6	1
Acrylonitrile	107-13-1	0.6	2,4-Dichlorophenol	120-83-2	10
Aniline	62-53-3	60	2,4-Dichlorophenoxy-acetic acid (2,4-D)	94-75-7	10.0
Anthracene	120-12-7	1050			
Antimony	7440-36-0	1	Dieldrin	60-57-1	0.02
Arsenic	7440-38-2	1.8	Diethyl phthalate	84-66-2	3000
Barium	7440-39-3	100.0	Dimethoate	60-51-5	70
Benzene	71-43-2	0.50	2,4-Dimethyphenol	105-67-9	70
Benzidine	92-87-5	0.002	2,6-Dimethyphenol	576-26-1	21
Beryllium	7440-41-7	0.08	m-Dinitrobenzene	99-65-0	0.4
Bis(2-chloroethyl) ether	111-44-4	0.3	2,4-Dinitrophenol	51-28-5	7
Bis(2-ethylhexyl) phthalate	117-81-7	30	2,4-Dinitrotoluene (and 2,6-, mixture)	602-01-7	0.13
Bromodichloromethane	75-27-4	0.3			
Bromomethane	74-83-9	5	Dinoseb	88-85-7	3.5
Butylbenzyl phthalate	85-68-7	700	1,4-Dioxane	123-91-1	30
Cadmium	7440-43-9	0.5	Dioxins (Polychlorinated dibenzo-p-dioxins)		
Carbon disulfide	75-15-0	400	2,3,7,8-TCDD	1746-01-6	0.005
Carbon tetrachloride	56-23-5	0.50	1,2,3,7,8-PeCDD	40321-76-4	0.010
Chlordane	57-74-9	0.03	1,2,3,4,7,8-HxCDD	57653-85-7	0.050
Chlorobenzene	108-90-7	70	1,2,3,6,7,8-HxCDD	34465-46-8	0.050
Chloroform	67-66-3	6.0	1,2,3,7,8,9-HxCDD		0.050
Chloro-m-cresol, p	59-50-7	7000	Diphenylamine	122-39-4	90
2-Chlorophenol	95-57-8	20	1,2-Diphenylhydrazine	122-66-7	0.4
Chromium	7440-47-3	5.0	Disulfoton	298-04-4	0.1
m-Cresol	108-39-4	200.0*	Endosulfan	959-98-8	0.2
o-Cresol	95-48-7	200.0*	Endrin	72-20-8	.02
p-Cresol	106-44-5	200.0*	2-Ethoxyethanol	10-80-5	1400
DDD	72-54-8	1	Ethylbenzene	100-41-4	400
DDE	72-55-9	1	Ethylene dibromide	106-93-4	0.004
DDT	50-29-3	1	Ethylene glycol	107-21-1	7000
Dibutyl phthalate	84-74-2	400	Fluoranthene	206-44-0	140
1,4-Dichlorobenzene	106-46-7	7.5	Fluorene	86-73-7	140

Appendix C — Class 1 Toxic Constituents' Maximum Leachable Concentrations (MCLs)

Compound	CAS No.	Concentration (mg/l)
Furans (Polychlorinated dibenzofurans)		
2,3,7,8-TCDF	51207-31-9	0.050
1,2,3,7,8-PeCDF		0.100
2,3,4,7,8-PeCDF		0.010
1,2,3,4,7,8-HxCDF		0.050
1,2,3,6,7,8-HxCDF		0.050
1,2,3,7,8,9-HxCDF		0.050
Heptachlor	76-44-8	0.008
Heptachlor epoxide	1024-57-3	0.04
Hexachlorobenzene	118-74-1	0.13
Hexachloro-1,3-butadiene	87-68-3	0.4
Hexachlorocyclopentadiene	77-47-4	20
Hexachloroethane	67-72-1	3.0
Hexachlorophene	70-30-4	1
Isobutyl alcohol	78-83-1	1000
Isophorone	78-59-1	90
Lead	7439-92-1	1.5
Lindane	58-89-9	0.3
Mercury	7439-97-6	0.2
Methacrylonitrile	126-98-7	0.4
Methomyl	16752-77-5	90
Methoxychlor	72-43-5	10.0
2-Methoxyethanol	109-86-4	14.0
Methyl ethyl ketone	78-93-3	200.0
Methyl isobutyl ketone	108-10-1	200
Methylene chloride	75-09-2	50
Methyl parathion	298-00-0	0.9
Mirex	2385-85-5	0.7
Nickel	7440-02-0	70
Nitrobenzene	98-95-3	2.0
N-Nitroso-di-n-butylamine	924-16-3	0.06
N-Nitrosodiphenylamine	86-30-6	70
N-Nitrosomethylethylamine	10595-95-6	0.02
N-Nitroso-n-propylamine	621-64-7	0.05
N-Nitrosopyrrolidine	930-55-2	0.2
p-Phenylenediamine	106-50-3	20
Parathion	56-38-2	20
Pentachlorobenzene	608-93-5	3
Pentachloronitrobenzene	82-68-8	10
Pentachlorophenol	87-86-5	100.0
Phenol	108-95-2	2000
Pronamide	23950-58-5	300
Pyrene	129-00-0	5.9
Pyridine	110-86-1	4
Selenium	7782-49-2	1.0
Silver	7440-22-4	5.0
Styrene	100-42-5	700
1,1,1,2-Tetrachloroethane	630-20-6	10
1,1,2,2-Tetrachloroethane	79-34-5	2
Tetrachloroethylene	127-18-4	0.7
2,3,4,6-Tetrachlorophenol	58-90-2	100
Toluene	108-88-3	1000
Toxaphene	8001-35-2	0.3
trans-1,3-Dichloropropene	542-75-6	1
Tribromomethane (Bromoform)	75-25-2	70
1,2,4-Trichlorobenzene	120-82-1	70
1,1,1-Trichloroethane	71-55-6	300
Trichloroethylene	79-01-6	0.5
1,1,2-Trichloroethane	79-00-5	6
Trichlorofluoromethane	75-69-4	1000
2,4,5-Trichlorophenoxy-propionic acid (2,4,5-TP or Silvex)	93-72-1	1.0
1,2,3-Trichloropropane	96-18-4	20
2,4,5-Trichlorophenol	95-95-4	400.0
2,4,6-Trichlorophenol	88-06-2	2
Vanadium pentoxide	1314-62-1	30
Vinyl chloride	75-01-4	0.2
Xylenes (all isomers)	1330-82-1	7000

* If o-, m-, and p-cresol concentrations cannot be differentiated, the total cresol concentration is used. The Maximum Concentration for total cresol is 200.0 mg/l.

EPAPA011000269

Appendix D

7-Day Distilled Water Leachate Test's Maximum Contaminant Levels

(30 TAC Chapter 335 Subchapter R APPENDIX 1 Table 3)

Applicability: **Class 3 Waste Evaluations**

Values obtained from 40 Code of Federal Regulations Part 141, Subparts B and G, Maximum Contaminant Levels and 40 Code of Federal Regulations Part 143, Total Dissolved Solids.

Constituent	MCL (mg/l)
Arsenic	0.05
Barium	1
*Benzene	0.005
Cadmium	0.005
*Carbon tetrachloride	0.005
Chlordane	0.002
*Chlorobenzene	0.1
Chromium	0.1
2,4-D	0.07
*Dibromochloropropane	0.0002
*ortho-Dichlorobenzene	0.6
*para-Dichlorobenzene	0.075
*1,2-Dichloroethane	0.005
*1,1-Dichloroethylene	0.007
*trans-1,2-Dichloroethylene	0.1
*1,2-Dichloropropane	0.005
*Ethylbenzene	0.7
Heptachlor	0.0004
Heptachlor epoxide	0.0002
Lead	0.05
Mercury	0.002
Methoxychlor	0.04
Pentachlorophenol	0.001
Selenium	0.05
Silver	0.05
*Styrene	0.1
*Tetrachloroethylene	0.005
*1,1,1-Trichloroethane	0.20
*Trichloroethylene	0.005
*Toluene	1
Toxaphene	0.003
2,4,5-TP (Silvex)	0.05
*Vinyl chloride	0.002
*Xylenes (total)	10
Total dissolved solids	500

* For a Class 3 waste classification, these constituents must also be evaluated using the test methods described in 40 Code of Federal Regulations, Part 261, Appendix II. See §335.507 (4) (A) (ii) for additional information.

Appendix E

Class 1 Toxic Constituents

(other than those identified in Appendix C, *and their Estimated Quantitation Limits [EQLs]*)

Applicability: **Class 3 Waste Evaluations**

This table is to be utilized by the generator in evaluating detection limits for the identified constituents. The EQLs in this table are defined as the lowest detectable levels that can be reliably achieved using the Toxicity Characteristic Leaching Procedure (TCLP) at the time of the printing of this guideline. Applicable EPA method numbers are provided and can be found in EPA Report SW-846 "Test Methods for Evaluating Solid Waste" except where noted. Please note that more than one test method may be available for a particular constituent. Synonyms are provided in brackets "[]".

Constituent	EQL (mg/l)	Method(s)
Acenaphthene	0.2	8100
	0.01	8270
	0.02	8250
Acetone	0.1	8240
Acetonitrile	0.1	8015
[Methyl cyanide]	0.1	8030
Acetophenone	0.001	8250
	0.01	8270
Acrylamide	0.005	8015
Acrylonitrile	0.005	8030
[Vinyl cyanide]	0.005	8240
Anthracene	0.2	8100
	0.02	8250
	0.01	8270
Aniline	0.01	8250
[Benzyl amine]	0.01	8270
Antimony	0.2	204
	0.3	6010
	2.0	7040
	0.03	7041
	2.0	7000A
Benzidine [Dianiline]	0.44	8250
Beryllium	**	210
	0.003	6010
	0.05	7090
	0.002	7091
	0.05	7000A
Bis(2-chloroethyl) ether	0.057	8250
[Dichloroethyl ether]	0.01	8270
Bis(2-ethylhexyl)	0.02	8060
phthalate	0.25	8250
	0.01	8270
Bromodichloromethane	0.001	8010
	0.005	8240
Bromomethane	0.003	8010
[Methylbromide]	0.01	8240
Butylbenzyl phthalate	0.005	8060
[Benzylbutyl phthalate]	0.025	8250
	0.01	8270
Carbon disulfide [CS_2]	0.005	8240

Constituent	EQL (mg/l)	Method(s)
Chloroform	0.0005	8010
	0.005	8240
p-Chloro-m-cresol	0.005	8040
	0.02	8270
2-Chlorophenol	0.003	8040
[o-Chlorophenol]	0.01	8270
m-Cresol	0.01	8270
o-Cresol	0.01	8270
p-Cresol	0.01	8270
DDD [Dichlorodiphenyl-	0.0001	8080
dichloroethane]	0.028	8250
	0.01	8270
DDE [Dichlorodiphenyl-	0.00004	8080
ethylene]	0.056	8250
	0.01	8270
DDT [Dichlorodiphenyl-	0.0001	8080
trichloroethane]	0.047	8250
	0.01	8270
Dibutyl phthalate	0.005	8060
	0.01	8270
1,4-Dichlorobenzene	0.004	8010
	0.003	8020
	0.013	8120
	0.01	8270
3,3-Dichlorobenzidine	0.02	8270
Dichlorodifluoromethane	0.01	8010
	0.005	8240
1,3-Dichloropropene	0.003	8010
	0.005	8240
2,4-Dichlorophenol	0.05	8040
	0.01	8270
Dieldrin	0.00002	8080
	0.01	8270
Diethyl phthalate	0.005	8060
	0.01	8270
Dimethoate	0.02	8270
2,4-Dimethylphenol	0.003	8040
	0.01	8270
2,6-Dimethylphenol	**	**

EPAPA011000271

Appendix E—Class 1 Toxic Constituents

Constituent	EQL (mg/l)	Method(s)
m-Dinitrobenzene	0.01	8270
2,4-Dinitrophenol	0.13	8040
	0.05	8270
2,4-Dinitrotoluene	0.0002	8090
(and 2,6-, mixture)	0.01	8270
Dinoseb	0.007	8150
	0.02	8270
1,4-Dioxane	0.15	8015
Dioxins (Polychlorinated dibenzo-p-dioxins)		
2,3,7,8-TCDD	0.000005	8280
1,2,3,7,8-PeCdd	0.00001	8280
1,2,3,4,7,8-HxCDD	0.00001	8280
1,2,3,6,7,8-HxCDD	0.00001	8280
1,2,3,7,8,9-HxCDD	0.00001	8280
Diphenylamine	0.01	8270
1,2-Diphenylhydrazine	0.2	1625
Disulfoton	0.002	8140
	0.01	8270
Endosulfan	0.0001	8080
	0.056	8250
Endrin	0.00006	8080
	0.01	8250
2-Ethoxyethanol	**	**
Ethylene dibromide [EDB]	0.5	6231
(Standard Methods for Examination of Water and Wastewater)		
Ethylene glycol	**	**
Fluoranthene	0.2	8100
	0.01	8270
Fluorene	0.2	8100
	0.01	8270
Furans (Polychlorinated dibenzofurans)		
2,3,7,8-TCDF	0.00001	8280
1,2,3,7,8-PeCDF	0.00001	8280
2,3,4,7,8-PeCDF	0.00001	8280
1,2,3,4,7,8-HxCDF	0.00001	8280
1,2,3,6,7,8-HxCDF	0.00001	8280
1,2,3,7,8,9-HxCDF	0.00001	8280
Hexachlorobenzene	0.0005	8120
	0.0	8270
Hexachloro-1,3-butadiene	0.0034	8120
	0.01	8270
Hexachlorocyclopentadiene	0.004	8120
	0.01	8270
Hexachloroethane	0.0003	8120
	0.01	8270
Hexachlorophene	0.05	8270
Isobutyl alcohol	0.05	8015
Isophorone	0.06	8090
	0.01	8270
Lindane	0.00004	8080
	0.01	8250
	0.00004	608
	0.01	625
Methacrylonitrile	0.005	8015
Methomyl	0.09	632

Constituent	EQL (mg/l)	Method(s)
2-Methoxyethanol	**	**
Methyl ethyl ketone [MEK]	0.01	8015
	0.1	8240
Methyl isobutyl ketone [MIBK]	**	8015
	0.005	8240
Methylene chloride	0.005	8010
[Dichloromethane]	0.005	8240
Methyl parathion	0.0003	8140
	0.01	8270
Mirex	**	**
Nickel	0.04	249
	0.05	6010
	0.4	7520
	0.04	7000A
Nitrobenzene	0.04	8090
	0.01	8250
	0.01	8270
N-Nitroso-di-n-butylamine	0.01	8270
N-Nitrosodiphenylamine	0.01	8270
N-Nitrosomethylethylamine	0.02	8270
N-Nitroso-n-propylamine	0.01	8270
N-Nitrosopyrrolidine	0.01	8270
p-Phenylenediamine	0.01	8270
Parathion	0.01	8270
	0.0003	8140
Pentachlorobenzene	0.02	8270
Pentachloronitrobenzene	0.01	8270
Phenol	0.001	8040
	0.01	8270
Pronamide	0.01	8270
Pyrene	0.2	8100
	0.01	8270
Pyridine	0.005	8240
	0.01	8270
1,1,1,2-Tetrachloroethane	0.005	8010
	0.005	8240
1,1,2,2-Tetrachloroethane	0.0003	8010
	0.005	8240
2,3,4,6-Tetrachlorophenol	0.01	8270
trans-1,3-Dichloropropene	0.0034	8010
	0.005	8240
Tribromomethane [Bromoform]	0.002	8010
	0.005	8240
1,2,4-Trichlorobenzene	0.01	8270
1,1,2-Trichloroethane	0.0002	8010
[1,1,2-TCE]	0.005	8240
Trichlorofluoromethane	0.01	8010
[Freon 11]	0.005	8240
1,2,3-Trichloropropane	0.01	8010
	0.005	8240
2,4,5-Trichlorophenol	0.01	8270
2,4,6-Trichlorophenol	0.006	8040
	0.01	8270
Vanadium pentoxide	0.2	286
	0.08	6010
	2.0	7910
	0.04	7911

* If o-, m-, and p-cresol concentrations cannot be differentiated, the total cresol concentration is used.
** This information not available at time of publication.

EPAPA011000272

Appendix F

7-Day Distilled Water Leachate Test Procedure

30 TAC Chapter 335 Subchapter R Appendix 4)

Applicability: **Class 3 Waste Evaluations**

This test is intended only for dry, solid wastes, i.e., waste materials without any free liquids.

1. Place a 250 gram (dry weight) representative sample of the waste material in a 1500 milliliter Erlenmeyer flask.

2. Add 1 liter of deionized or distilled water into the flask and mechanically stir the material at a low speed for five (5) minutes.

3. Stopper the flask and allow to stand for seven (7) days.

4. At the end of seven (7) days, filter the supernatant solution through a 0.45 micron filter, collecting the supernatant into a separate flask.

5. Subject the filtered leachate to the appropriate analysis.

Appendix G

Form Codes

(30 TAC Chapter 335 Subchapter R Appendix 3)

Applicability: **All Waste**

In determining a waste stream's form code, it is recommended that the generator first determine into which major category the waste stream fits (e.g. inorganic liquids). The generator should then review all the form code descriptors in that category to determine which code or codes best describe the generator's waste stream. The generator should then choose, from the narrowed-down list, a form code for the waste stream.

Form codes are fairly generic in their descriptions. It is possible that more than one form code may be applicable to a particular waste stream. Generators should assign the form code which best describes the waste stream. If more than one form code can "best describe" the waste stream, then the generator should choose one of those several codes.

Code	Waste Description
	Lab Packs
	Lab Packs *— Lab packs of mixed wastes, chemicals, lab wastes*
001	Lab packs of old chemicals only
002	Lab packs of debris only
003	Mixed lab packs
004	Lab packs containing acute hazardous wastes
009	Other lab packs (Specify in Comments)
	Liquids
	Inorganic Liquids *— Waste that is primarily inorganic and highly fluid (e.g., aqueous), with low suspended inorganic solids and low organic content*
101	Aqueous waste with low solvents
102	Aqueous waste with low other toxic organics
103	Spent acid with metals
104	Spent acid without metals
105	Acidic aqueous waste
106	Caustic solution with metals but no cyanides
107	Caustic solution with metals and cyanides
108	Caustic solution with cyanides but no metals
109	Spent caustic
110	Caustic aqueous waste
111	Aqueous waste with reactive sulfides
112	Aqueous waste with other reactives (e.g., explosives)
113	Other aqueous waste with high dissolved solids
114	Other aqueous waste with low dissolved solids
115	Scrubber water
116	Leachate
117	Waste liquid mercury
119	Other inorganic liquids (Specify in Comments)
198	Nonhazardous photographic chemical wastes (inorganic)
199	Brine solution that could also bear the form code 113
	Organic Liquids *— Waste that is primarily organic and is highly fluid, with low inorganic solids content and low-to-moderate water content*
201	Concentrated solvent-water solution
202	Halogenated (e.g., chlorinated) solvent
203	Non-halogenated solvent
204	Halogenated/non-halogenated solvent mixture
205	Oil-water emulsion or mixture
206	Waste oil
207	Concentrated aqueous solution of other organics
208	Concentrated phenolics
209	Organic paint, ink, lacquer, or vanish
210	Adhesives or epoxies
211	Paint thinner or petroleum distillates

Code	Waste Description
212	Reactive or polymerizable organic liquids
219	Other organic liquids (Specify in Comments)
296	Ethylene glycol based antifreeze
297	Nonhazardous liquids containing greater than or equal to (>) 50 and less than (<) 500 ppm PCBs
298	Nonhazardous liquids containing greater than or equal to (>) 500 ppm PCBs
299	Nonhazardous photographic chemical waste (organic)

Solids

*(These codes **do not** apply to pumpable waste.)*

Inorganic Solids** — Waste that is primarily inorganic and solid, with low organic content and low-to-moderate water content; **not pumpable

Code	Waste Description
301	Soil contaminated with organics
302	Soil contaminated with inorganics only
303	Ash, slag, or other residue from incineration of wastes
304	Other "dry" ash, slag, or thermal residue
305	"Dry" lime or metal hydroxide solids chemically "fixed"
306	"Dry" lime or metal hydroxide solids not "fixed"
307	Metal scale, filings, or scrap
308	Empty or crushed metal drums or containers
309	Batteries or battery parts, casings, cores
310	Spent solid filters or adsorbents
311	Asbestos solids and debris
312	Metal-cyanide salts/chemicals
313	Reactive cyanide salts/chemicals
314	Reactive sulfide salts/chemicals
315	Other reactive salts/chemicals
316	Other metal salts/chemicals
319	Other waste inorganic solids (Specify in Comments)
388	Empty or crushed glass containers
389	Nonhazardous sandblasting waste
390	Nonhazardous concrete/cement/ construction debris
391	Nonhazardous dewatered wastewater treatment sludge
392	Nonhazardous dewatered air pollution control device sludge
393	Catalyst waste
394	Nonhazardous solids containing greater than or equal to (>) 50 ppm and less than (<) 500 ppm PCBs
395	Nonhazardous solids containing greater than or equal to (>) 500 ppm PCBs
396	Nonhazardous electrical equipment/ devices containing greater than or equal to (>) 50ppm and less than (<) 500 ppm PCBs
397	Nonhazardous electrical equipment/ devices containing greater than or equal to (>) 500 ppm PCBs
398	Nonhazardous soils containing greater than or equal to (>) 50 ppm and less than (<) 500 ppm PCBs
399	Nonhazardous soils containing greater than or equal to (>) 500 ppm PCBs

Organic Solids** — Waste that is primarily organic and solid, with low-to-moderate inorganic content and water content; **not pumpable

Code	Waste Description
401	Halogenated pesticide solid
402	Non-halogenated pesticide solid
403	Solids resins or polymerized organics
404	Spent carbon
405	Reactive organic solid
406	Empty fiber or plastic containers
407	Other halogenated organic solids (Specify in Comments)
409	Other non-halogenated organic solids (Specify in Comments)
488	Wood debris
489	Petroleum contaminated solids
490	Sand blasting waste
491	Dewatered biological treatment sludge
492	Dewatered sewage or other untreated biological sludge
493	Catalyst waste
494	Solids containing greater than or equal to (>) 50 ppm and less than (<) 500 ppm PCBs
495	Solids containing greater than or equal to (>) 500 ppm PCBs
496	Electrical equipment/devices containing greater than or equal to (>) 50 ppm and less than (<) 500 ppm PCBs
497	Electrical equipment/devices containing greater than or equal to (>) 500 ppm PCBs
498	Soil containing greater than or equal to (>) 50 ppm and less than (<) 500 ppm PCBs
499	Soils containing greater than or equal to (>) 500 ppm PCBs

EPAPA011000275

Appendix G—Form Codes

Code	Waste Description

Sludges

(These codes only apply to pumpable waste.)

Inorganic Sludges *— Waste that is primarily inorganic, with moderate-to-high water content and low organic content, and* ***pumpable***

501	Lime sludge without metals
502	Lime sludge with metals/metal hydroxide sludge
503	Wastewater treatment sludge with toxic organics
504	Other wastewater treatment sludge
505	Untreated plating sludge without cyanides
506	Untreated plating sludge with cyanides
507	Other sludge with cyanides
508	Sludge with reactive sulfides
509	Sludge with other reactives
510	Degreasing sludge with metal scale or filings
511	Air pollution control device sludge (e.g., fly ash, wet scrubber sludge)
512	Sediment or lagoon dragout contaminated with organics
513	Sediment or lagoon dragout contaminated with inorganics only
514	Drilling mud
515	Asbestos slurry or sludge
516	Chloride or other brine sludge
519	Other inorganic sludges (Specify in Comments)
597	Catalyst waste
598	Nonhazardous sludges containing greater than or equal to (>) 50 ppm and less than (<) 500 ppm PCBs
599	Nonhazardous sludges containing greater than or equal to (>) 500 ppm PCBs

Organic Sludges *— Waste that is primarily organic with low-to-moderate inorganic solids content and water content, and* ***pumpable***

601	Still bottoms of halogenated (e.g., chlorinated) solvents or other organic liquids
602	Still bottoms on non-halogenated solvents or other organic liquids
603	Oily sludge
604	Organic paint or ink sludge
605	Reactive or polymerizable organics
606	Resins, tars, or tarry sludge
607	Biological treatment sludge
608	Sewage or other untreated biological sludge
609	Other organic sludges (Specify in Comments)
695	Petroleum contaminated sludges other than still bottoms and oily sludges
696	Grease
697	Catalyst waste
698	Nonhazardous sludges containing greater than or equal to (>) 50 ppm and less than (<) 500 ppm PCBs
699	Nonhazardous sludges containing greater than or equal to (>) 500 ppm PCBs

Gases

Inorganic Gases *— Waste that is primarily inorganic with a low organic content and is a gas at atmospheric pressure*

701	Inorganic gases

Organic Gases *— Waste that is primarily organic with low-to-moderate inorganic content and is a gas at atmospheric pressure*

801	Organic gases

Plant Trash

(In order to be considered for one of the two plant refuse designations, a waste must first meet the following two criteria.

First*, the waste* ***must*** *be a Class 2 waste. This means that a proper classification determination must be performed for each item which a facility is considering as one of the plant refuse designations. A waste is not a Class 2 solely because it has been designated as a plant refuse waste.* ***Hazardous*** *and* ***Class 1 wastes*** *are* ***not eligible*** *for designation as one of the plant refuses.*

Second*, the waste must meet the particular definition of the plant refuse term. For more information on these terms, please refer to the terms listed in this table as well as the "Definitions" section which follows this table.)*

902 **Supplemental plant production refuse** – any Class 2 waste from production, manufacturing, or laboratory operations as long as the total amount of the supplemental plant production refuse does not exceed twenty percent of the total plant trash (form code 999) volume or weight, whichever is less – this could include, but is not limited to, such things as metal parts, floor sweepings, and off-specification materials

999 **Plant Trash** – any Class 2 waste originating in the facility offices, laboratory, plant production area or food services/cafeteria operations that is composed of paper, cardboard,

EPAPA011000276

Code	Waste Description	Code	Waste Description
	linings, wrappings, paper and/or wooden packaging materials, uncontaminated food wastes and/or packaging, cafeteria wastes, glass, aluminum foil, aluminum cans, aluminum scrap, stainless steel, steel, iron scrap, plastics, styrofoam, rope, twine, uncontaminated rubber, uncontaminated wooden materials, equipment belts, wirings,		uncontaminated cloth, metal bindings, empty containers with a holding capacity of less than five gallons, uncontaminated floor sweepings, and personal cosmetics generated by facility personnel (does not include cosmetics generated as a result of manufacturing or plant production operations).

Form Code Definitions

The following are definitions of terms utilized in form codes:

Acidic – A material having a pH less than 7.0.

Alkaline – A material having a pH greater than 7.0.

Aqueous – A water solution containing organic and/or inorganic constituents dissolved in solution.

Caustic – A material which is corrosive or irritating to living tissue and has a pH greater than 7.

Inorganic – Chemicals that are not organic (i.e., water, carbon dioxide, carbon disulfide, iron, zinc, steel). Generally, if a waste is composed of more than 50% inorganic materials, it is considered an inorganic waste.

Organic – Chemicals composed primarily of carbon and hydrogen and their derivatives. (i.e. methylene chloride, benzene, petroleum products). In general, if a waste is composed of 50% or more organic materials, it is considered an organic waste.

Plant Trash – Includes the following Class 2 wastes which are produced as a result of plant production, manufacturing, laboratory, general office, cafeteria or food service operations; paper, cardboard, linings, wrappings, paper or wood packaging materials, food wastes, cafeteria wastes, glass, aluminum foil, aluminum cans, aluminum scrap, stainless steel, steel, iron scrap, plastics, styrofoam, rope, twine, uncontaminated rubber, uncontaminated wooden materials, equipment belts, wirings, uncontaminated cloth, metal bindings, empty containers with a holding capacity of less than five gallons, uncontaminated floor sweepings, and personal cosmetics generated by facility personnel (does not include cosmetics generated as a result of manufacturing or plant production operations). **Please note that hazardous waste and Class 1 waste can not be designated as "plant office refuse".** Plant trash shall not include oils, lubricants of any type, oil filters, contaminated soils, sludges, or wastewaters.

Examples of "plant trash" include Class 2 soda cans, lunch sacks, food scraps, envelopes, plastic binders, empty boxes, pallets, styrofoam shipping boxes, chemical container liners, shrink wrap, and broken glassware.

As another example, used typing paper from the secretarial area could be considered "plant trash" because it resulted from general office operations. (Please note that typing paper would normally be considered a Class 2 waste unless it were contaminated with something to cause it to be considered a hazardous or Class 1 waste. For example, if typing paper were used to clean up a spill of a F003 waste, it would be considered a hazardous waste.)

As another example, a Class 2 off-specification production chemical could not be considered "plant trash" because it does not meet the definition of a "plant trash". However, the Class 2 off-specification production chemical might be considered a "supplemental plant production refuse" as long as the weight/volume limits established for "supplemental plant production refuse" were not exceeded. (For more information on "supplemental plant production refuse" and weight/volume limits, please see "Supplemental Plant Production Refuse" in these definitions.

Reactive – A material is reactive if it is capable of detonation or explosive decomposition:
1. at standard temperature and pressure, or
2. if subjected to a strong ignition source, or
3. heated under confinement.

A material is also considered reactive if, when mixed with water it is:
1. potentially explosive, or
2. reacts violently, or
3. generates toxic gases or vapors (i.e. hydrogencyanide or hydrogensulfide).

EPAPA011000277

Form Code Definitions

A material is also considered reactive if it is:
1. normally unstable and readily undergoes violent changes, or
2. a forbidden explosive (see 49 CFR §173.53), or
3. a Class B explosive (see 49 CFR §173.88).

Solvent – A liquid used to dissolve another material.

Supplemental Plant Production Refuse – Any **Class 2 Waste from production, manufacturing, or laboratory operations** can be designated as **"supplemental plant production refuse"** (form code 999) as long as the total amount of the supplemental plant production refuse **does not exceed twenty percent of the total plant production refuse volume or weight, whichever is less.**

Individual wastes which have been designated "supplemental plant production refuse" may be designated by the generator at a later time as a separate waste in order to maintain the "supplemental plant production refuse" at a level below 20% of the "plant trash" amount. For any waste stream so redesignated, the generator must provide the initial notification information required pursuant to 30 TAC Chapter 335.

Please note that hazardous waste and Class 1 waste can not be designated as "supplemental plant production refuse".

Examples of "supplemental plant production refuse" include Class 2 steel shavings, empty metal containers, aerosol cans, old chemicals, safety equipment, and machine parts.

Please note that when a site notifies the Commission that it generates "supplemental plant production refuse", it must include a list of those wastes which are expected to be included in the "supplemental plant production refuse" designation. If that list increases, the generator must notify the Commission of the additions to that list; otherwise, the Commission will not view the additions as "supplemental plant production refuse".

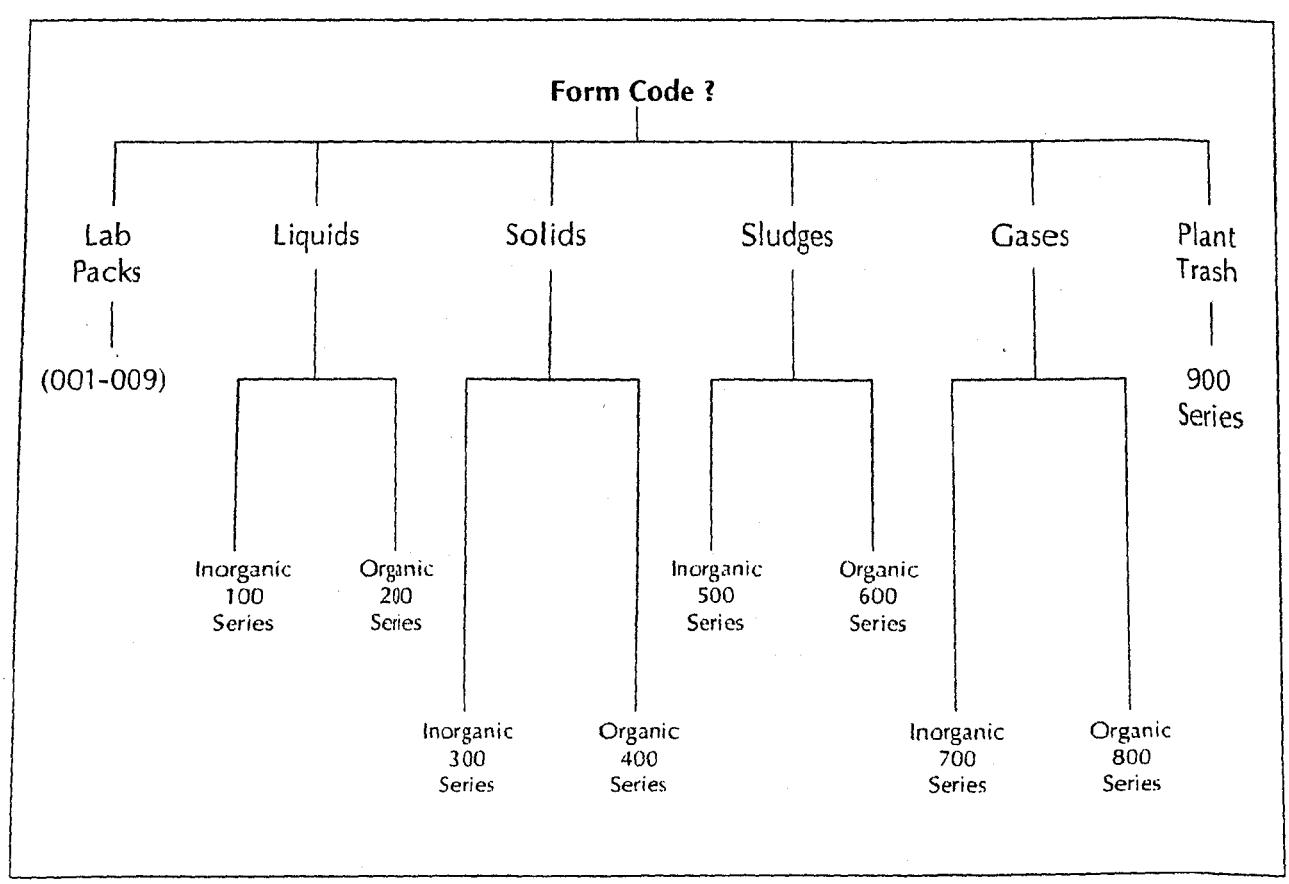

Liquids

Inorganic – 100 series

(Waste that is primarily inorganic and highly fluid, (e.g., aqueous), with low suspended solids and low organic content.)

Examples:

1. 99% water with 1% methanol **101**
2. 98% water with 2% methyl ethyl ketone MEK **102**
3. Waste sulfuric acid from plastics cleaning **104**
4. Water with 0.73% potassium permanganate **114**
5. Leachate from landfills **116**
6. Waste photographic fixer **198**

Organic – 200 series

(Waste that is primarily organic and is highly fluid, with low inorganic solids and low-to-moderate water content.)

Examples:

1. Solvent mixture 65% methylene chloride, 30% phenol, 5% cresol **204**
2. 95% motor oil, 5% water emulsion **205**
3. Used hydraulic oil **206**
4. Unused varnish and organic paint **209**
5. Waste ethylene glycol antifreeze **296**

Solids

Inorganic – 300 series

*(Waste that is primarily inorganic and solid, with low organic content and low-to-moderate water content; **not pumpable.**)*

Examples:

1. Soil contaminated with naptha **301**
2. Incinerator ash **303**
3. Crushed RCRA empty metal drums **308**
4. Lead acid batteries, chips and cores **309**
5. Concrete, plaster and other construction debris **390**
6. Metalic catalyst waste **393**

Organic – 400 series

*(Waste that is primarily organic and solid, with low-to-moderate inorganic and water content; **not pumpable.**)*

Examples:

1. Unused malathion pellets **402**
2. Spent carbon from filters **404**
3. Wooden house exterior debris **488**
4. Paper contaminated with oil **489**
5. Sand blasting waste from petroleum tanks **490**
6. Dewatered sewage sludge **492**

Sludges

Inorganic – 500 series

*(Waste that is primarily inorganic, with moderate-to-high water content, and low organic content, and **pumpable.**)*

Examples:

1. Wastewater treatment sludge containing phenolics **503**
2. Zinc plating wastewater sludge containing cyanide **506**
3. Sludge from pollution removal scrubber **511**
4. Sediment pond dragout contaminated with lead **513**
5. Water based drilling mud with brine **514**
6. Waste metal catalyst with 0.89% organics **597**

Organic – 600 series

*(Waste that is primarily organic, with moderate-to-high water content, and low inorganic content, and **pumpable.**)*

Examples:

1. Still bottoms from naptha recovery **602**
2. Ink and paint sludge from printing billboards **604**
3. Bioremediation sludge from oil spill cleanup **607**
4. Motor repair facility sludge with grease **603**
5. Refinery wastewater sludge with petroleum compounds **695**
6. Waste lubricating grease **696**

Lab Packs – 001-009 series

Examples:

1. Lab pack containing debris **002**
2. Lab pack containing old unused or partially used chemicals **001**

Plant Trash – 900 series

Examples:

1. Office debris (i.e., paper, plastic, alluminum cans and fax paper) **999**
2. Scrap plastic from molds of toys and souvenirs **902**
3. Packing debris from unpacking of raw materials **999**

Appendix H

Codes for Out-of-State Waste Generators and Receivers

Codes for States of the United States			
State or Country	Abbre-viation	Generator No.	Receiver No.
Alabama	AL	D0001	D0001
Alaska	AK	D0002	D0002
Arizona	AZ	D0004	D0004
Arkansas	AR	D0005	D0005
California	CA	D0006	D0006
Colorado	CO	D0008	D0008
Connecticut	CT	D0009	D0009
Delaware	DE	D0010	D0010
Dist. of Columbia		D0011	D0011
Florida	FL	D0012	D0012
Georgia	GA	D0013	D0013
Hawaii	HI	D0015	D0015
Idaho	ID	D0016	D0016
Illinois	IL	D0017	D0017
Indiana	IN	D0018	D0018
Iowa	IA	D0019	D0019
Kansas	KS	D0020	D0020
Kentucky	KY	D0021	D0021
Louisiana	LA	D0022	D0022
Maine	ME	D0023	D0023
Maryland	MD	D0024	D0024
Massachusetts	MA	D0025	D0025
Michigan	MI	D0026	D0026
Minnesota	MN	D0027	D0027
Mississippi	MS	D0028	D0028
Missouri	MO	D0029	D0029
Montana	MT	D0030	D0030
Nebraska	NE	D0031	D0031
Nevada	NV	D0032	D0032
New Hampshire	NH	D0033	D0033
New Jersey	NJ	D0034	D0034
New Mexico	NM	D0035	D0035
New York	NY	D0036	D0036
North Carolina	NC	D0037	D0037
North Dakota	ND	D0038	D0038
Ohio	OH	D0039	D0039
Oklahoma	OK	D0040	D0040
Oregon	OR	D0041	D0041
Pennsylvania	PA	D0042	D0042
Rhode Island	RI	D0044	D0044
South Carolina	SC	D0045	D0045
South Dakota	SD	D0046	D0046
Tennessee	TN	D0047	D0047
Utah	UT	D0049	D0049
Vermont	VT	D0050	D0050
Virginia	VA	D0051	D0051
Washington	WA	D0053	D0053
West Virginia	WV	D0054	D0054
Wisconsin	WI	D0055	D0055
Wyoming	WY	D0056	D0056

Country Codes (in Order of Assigned Numbers)		
State or Country	Generator No.	Receiver No.
Navajo Nation	D0057	D0057
Puerto Rico	D0060	D0060
Virgin Islands	D0066	D0066
Guam	D0075	D0075
American Samoa	D0083	D0083
Mexico	F0061	F0061
Japan	F0062	F0062
Canada	F0063	F0063
England	F0064	F0064
Spain	F0065	F0065
Denmark	F0067	F0067
Germany	F0068	F0068
Belgium	F0069	F0069
Finland	F0070	F0070
Netherlands	F0071	F0071
Pacific Islands	F0072	F0072
Venezuela	F0073	F0073
Marshall Islands	F0074	F0074
France	F0076	F0076
Malaysia	F0077	F0077
Austria	F0078	F0078
Holland	F0079	F0079
Hong Kong	F0080	F0080
Norway	F0081	F0081
Panama	F0082	F0082
Greece	F0084	F0084
Peru	F0085	F0085
Brazil	F0086	F0086
Offshore beyond 12 mi.	F0087	F0087
Saudi Arabia	F0088	F0088
Jamaica	F0089	F0089
Italy	F0090	F0090
Belize	F0091	F0091
Luxemburg	F0092	F0092
Haiti	F0093	F0093
Nicaragua	F0094	F0094
Australia	F0095	F0095
Sweden	F0096	F0096
El Salvador	F0097	F0097
Trinidad de Tobago	F0098	F0098
Taiwan	F0099	F0099
Cambodia	F0001	F0001
Bahamas Islands	F0002	F0002
Columbia	F0003	F0003
South Africa	F0004	F0004
China	F0005	F0005
India	F0006	F0006
Chile	F0007	F0007
Thailand	F0008	F0008
Slovenia	F0009	F0009
Netherlands Antilles (A,B,C)	F0010	F0010
Honduras	F0011	F0011

EPAPA011000281

HAZARDOUS WASTE REQUIREMENTS
(Checklist)

(1) Conditionally Exempt Small Quantity Generators (CESQG) 40 CFR 261.5.

NEED NO EPA ID #

CESQG's generate less than 100 kilograms (220 lbs) of HW per month and less than 1 kilogram (2.2 lbs) of acute HW (such as some pesticides, toxins or arsenic and cyanide compounds) per month. Many wastes that are recycled are included in this quantity determination.

- ☐ Perform hazardous waste determination (§262.11)
- ☐ Cannot accumulate > 1000 kg (2,200 lbs) at any time.
- ☐ Ensure delivery of HW to a proper recycling facility or TSDF.
- ☐ Keep records documenting proper disposal

(2) Small Quantity Generators (SQG) 40 CFR 262.

SQG's generate 100 - 1000 kilograms (220 – 2,200 lbs) of HW per month and less than 1 kilogram (2.2 lbs) of acute HW (such as some pesticides, toxins or arsenic and cyanide compounds) per month. Many wastes that are recycled are included in this quantity determination.

- ☐ Obtain a State/EPA ID Number (§262.12). Request EPA form 8700-12, "Notification of Regulated Waste Activity".
- ☐ Use manifest system (unless there is a reclamation agreement pursuant to §262.20(e)), and ship only to a permitted facility (262, Subpart B).
- ☐ Never exceed the 6000 kg (13,200 lbs) accumulation/180 day storage time limit.
- ☐ Emergency Planning (§269.34 (d)(5):

  (a) Have at least one employee or a designee with authority as Emergency Coordinator (EC) on 24-hour call.

  (b) Next to the telephone, post
  - (i) the EC's name and phone number;
  - (ii) fire department's number;
  - (iii) location of fire extinguishers; spill control equipment/material, and fire alarm.

  (c) Follow emergency procedures in §262.34(d)(5), including taking necessary steps to address spills and fires, and notifying the National Response Center (24-hour number: 800/424-8802).

- ☐ Training of personnel regarding proper HW handling and emergency response [§262.34(d)(5)(iii)].

56

- ☐ Keep records (§262.44), including manifests, test results, etc., a minimum of three (3) years.
- ☐ Perform HW determination (§262.11), including LDR waste analyses (§268.7).
- ☐ Meet pre-transport requirements for packaging, labeling, marking and placarding (262 Subpart C).
- ☐ Meet satellite accumulation rules (§262.34(c)). Close and label these containers.
- ☐ Label containers and tanks with the words "Hazardous Waste" and label containers with accumulation start dates (§262.34(a)).
- ☐ Maintain and operate the facility in a clean, safe manner (§265.31).
- ☐ Emergency equipment (§265.32).
  - o Telephone or hand-held two-way radio;
  - o Internal communication or alarm system;
  - o Fire and spill control equipment (e.g. fire extinguishers, hoses, sprinklers, etc.);
  - o Neutralizing agents, spill adsorbents, overpack drums, standby 55-gallon drums, etc.;
  - o Test and maintain the emergency equipment (§265.33).
- ☐ Maintain adequate aisle space for evacuation, inspecting drums, etc. (e.g. no less than three (3) feet) (§265.35).
- ☐ Containers (e.g. drums, cans, etc.) must be kept closed at all times, except when it is necessary to add or remove waste.
- ☐ A Land Disposal Restrictions (LDR) Certification or Notification must accompany the initial manifest for a restricted waste. Generators who treat waste to meet land disposal restrictions must submit a waste analysis plan to the State (§268.7).

(3) Large Quantity Generators (LQG) 40 CFR 262.

LQG's generate 1000 kilograms (2,200 lbs) or more of HW per month or 1 kilogram (2.2 lbs) or more of acute HW (such as some pesticides, toxins or arsenic and cyanide compounds) per month. Many wastes that are recycled are included in this quantity determination.

- ☐ Perform HW determination (§262.11), including LDR waste analyses (§268.7).
- ☐ Obtain a State/EPA ID number (§262.12). Request EPA form 8700-12, "Notification of Regulated Waste Activity".
- ☐ Use manifest system, and ship to a permitted facility (262, Subpart B).
- ☐ Meet pre-transport requirements for packaging, labeling, marking and placarding (262 Subpart C).

- ☐ Meet satellite accumulation rules (§262.34(c)). Close and label these containers.

- ☐ Label containers and tanks with the words "Hazardous Waste" and label containers with accumulation start dates (§262.34(a)).

- ☐ Do not store HW > 90 days (§262.34(b)).

- ☐ Keep all records (§262 Subpart D) for at least three (3) years (including manifests, test data, biennial reports, etc.).

- ☐ File a biennial report for HW shipped off site. Submit biennial report by March 1 of even numbered years (§262.41) covering generator activities for the previous year.

- ☐ File exception report for late or missing manifests from the designated facility (§262.42).

- ☐ Meet personnel training requirements, including documentation of training (§265.16).

- ☐ Maintain and operate the facility in a clean, safe manner (§265.31).

- ☐ Emergency equipment (§265.32).

  - o Telephone or hand-held two-way radio;
  - o internal communication or alarm system;
  - o fire and spill control equipment (e.g. fire extinguishers, hoses, sprinklers, etc.);
  - o neutralizing agents, spill adsorbents, overpack drums, standby 55-gallon drums, etc.;
  - o test and maintain the emergency equipment (§265.33).

- ☐ Maintain adequate aisle space for evacuation, inspecting drums, etc. (e.g. no less than three (3) feet) (§265.35).

- ☐ Attempt to make arrangements with local fire and police departments, hospitals, and emergency response contractors/equipment suppliers, with regards to emergency arrangements, hazards of materials handled, layout of facility, etc. (§265.37).

- ☐ Have a contingency plan meeting the requirements of 265 Subpart D. Emergencies that require implementation of the contingency plan must be reported to the State. Updated contingency plans must be distributed when facility conditions or emergency coordinators change.

- ☐ Containers (e.g. drums, cans, etc.) must be kept closed and in good condition, inspected at least weekly, be compatible with the HW stored, and separated from other incompatible wastes (e.g. keep cyanides away from acids) (265 Subpart I). Records must be kept of these inspections.

- ☐ Ignitable or reactive HW must be stored at least fifty (50) feet from the facility's boundary line (265 Subpart I).

5

- ☐ Tanks must meet the requirements of 265 Subpart J (structural integrity; containment and detection of releases; inspections; response to leaks or spills; operating requirements; closure and post-closure care; special requirements for ignitable, reactive and/or incompatible wastes; waste analysis and trial tests).

- ☐ Special cautions (including "no smoking" signs) are required for ignitable or reactive wastes (§265.17).

- ☐ Security (e.g. a locked fence) and bermed containment areas (with roof and impermeable floor) for HW storage areas are strongly recommended.

- ☐ A Land Disposal Restrictions (LDR) Certification or Notification must accompany the initial manifest for a restricted waste. Generators who treat waste to meet land disposal restrictions must submit a waste analysis plan to the State (§268.7).

NOTES:

EPAPA011000285

S9

Summary of Hazardous Waste Regulations (Checklist)

This hazardous waste (HW) regulatory checklist should be used in conjunction with (and not as a substitute for) the federal and state HW regulations. This checklist includes the principal components of the HW regulations. Regulatory requirements may change because of changes in the regulations, new interpretations or guidance from EPA or State (DEP), judicial rulings, etc.

EPA defines three categories of hazardous waste generators based upon the quantity of hazardous waste they generate per month:

- ☐ (1) Conditionally exempt small quantity generators (CESQGs), which generate less than 220 lbs (100 kg) per month.
- ☐ (2) Small quantity generators (SQGs), which generate between 220 lbs (100 kg) and 2,200 lbs (1,000 kg) per month.
- ☐ (3) Large quantity generators (LQGs), which generate more than 2,200 lbs (1,000 kg); >2.2 lbs (1 kg) of acute hazardous waste per month.

Each category of generator must comply with the hazardous waste rules specific to that category.

(Determine your applicable "generator" category and follow the checklist below for that category)

USED OIL REQUIREMENTS FOR ALL GENERATORS 40 CFR PART 279

- ☐ Used oil may only be stored in tanks or containers.
- ☐ Containers and tanks must be in good condition and not leaking.
- ☐ Containers, tanks and fill pipes must be labeled "Used Oil."
- ☐ Spills must be cleaned up, and contaminated materials disposed of properly.
- ☐ * Used oil filters that have been properly drained and crushed are exempted from federal hazardous waste regulations, provided the filters are non-terne plated.
- ☐ Used oil should not be mixed with other materials (solvents, antifreeze, kerosene, paint, hazardous waste, etc.).
- ☐ Used oil is exempted from HW program only if it is managed through a used oil recycler.

*** Note: In many states, used "oil filters" may not be disposed of to landfills. They must be recycled by an oil filter processor or municipal refuse incinerator. Check with your state.**

EPAPA011000286

D - LIST

Characteristic Hazardous Wastes

1. Ignitable- ***D001***	A waste exhibits the characteristic of ignitability if the waste exhists in the following forms: o a liquid,other than an aqueous solution containing less than 24 percent alcohol by volume, with a flash point below 60° (140°F); o a non-liquid, which under standard conditions is capable of causing fire through friction, absorption of moisture, or spontaneous chemical changes and, when ignited, burns in a manner that creates a hazard o an ignitable compressed gas, which includes gases that form flammable mixtures at a concentration of 13 percent or less in air; or o an oxidizer, such as permanganate, inorganic peroxide, or nitrate, that readily stimulates combustion of organic materials.
2. Corrosives- ***D002***	A waste exhibits the characteristic of corrosivity if the waste: o is aqueous and has a pH less than or equal to 2, or greater than or equal to 12.5, using EPA-specified or approved test methods; or o is a liquid and corrodes steel (SAE 1020) at a rate greater than 6.35 millmeters (0.250 inch) per year at a test temperature of 55° (130°.
3. Reactive- ***D003***	A waste exhibits the characteristics of reactivity if the waste: o is normally unstable and readily undergoes violent change without detonation; o reacts violently with water; o forms potentially explosive mixtures with water; o generates, when mixed with water, toxic gases, vapors, or fumes in a quantity sufficient to present a danger o is a cyanide or sulfide bearingwaste that generates toxic gases, vapors, or fumes at a pH between 2 and 12.5; o is capable of detonation or explosive reaction when subject to a strong initiating source or if heated in

	confinement; o is readily capable of detonation, explosive decomposition, or reaction at standard temperature and pressure; or o is an explosive, as defined in 49 CFR Sections 173.51, 173.53 or 173.88.
4. Toxicity- ***See "D" List Below***	A waste exhibits the characteristic of toxicity when EPA-defined test procedures indicate that an extract derived from the waste contains certain toxicants. The toxicants to be tested for are: arsenic; barium; benzene; cadmium; carbon tetrachoride; chlordane; chlorobenzene; chloroform; chromium; o-, m- and p-cresol; 2,4-D; 1,4-dichlorobenzene; 1,2-dichloroethane; 1,1-dichlorethylene; 2,4-dinitrotoluene; Endrin; heptachlor (and its hydroxide); hexachlorobenzene; hexachlorobutadiene; hexachloroethane; lead; Lindane; mercury; methoxychlor; methyl ethyl ketone; nitrobenzene; pentachlorophenol; pyridine; selenium; silver; tetrachlorethylene, 2,4,5- and 2,4,6-trichlorophenol; 2,4,5-TP (Silvex); vinyl chloride.

Toxicity Characteristic Constituents and Regulatory Levels (TCLP)

EPA Waste No.	Constituent	CAS Number	Regulatory Level (mg/L)
D004	Arsenic	7440-38-2	5.0
D005	Barium	7440-39-3	100.0
D006	Cadmium	7440-43-9	1.0
D007	Chromium	7440-47-3	5.0
D008	Lead	7439-92-1	5.0
D009	Mercury	7439-97-6	0.2
D010	Selenium	7782-49-2	1.0
D011	Silver	7440-22-4	5.0
D012	Endrin	72-20-8	0.02
D013	Lindane	58-89-9	0.4
D014	Methoxychlor	72-43-5	10.0
D015	Toxaphene	8000-35-2	0.5
D016	2,4-D	94-75-7	10.0
D017	2,4,5-TP (Silvex)	93-72-1	1.0
D018	Benzene	71-43-2	0.5

D019	Carbon Tetrachloride	56-23-5	0.5
D020	Chlordane	57-74-9	.03
D021	Chlorobenzene	108-90-7	100.0
D022	Chloroform	67-66-3	6.0
D023	o-Cresol	95-48-7	200.0
D024	m-Cresol	108-39-4	200.0
D025	p-Cresol	106-44-5	200.0
D026	Cresol	1319-77-3	200.0
D027	1,4-Dichlorobenzene	106-46-7	7.5
D028	1,2-Dichloroethane	107-06-2	0.5
D029	1,1-Dichloroethylene	75-35-4	0.7
D030	2,4-Dinitrotoluene	121-14-2	0.13
D031	Heptachlor (and its hydroxide)	76-44-8	0.008
D032	Hexachlorobenzene	118-74-1	0.13
D033	Hexachloro-1,3-butadiene	87-68-3	0.5
D034	Hexachloroethane	67-72-1	3.0
D035	Methyl ethyl ketone	78-93-3	200.0
D036	Nitrobenzene	98-95-3	2.0
D037	Pentachlorophenol	87-86-5	100.0
D038	Pyridine	100-86-1	5.0
D039	Tetrachloroethylene	127-18-4	0.7
D040	Trichloroethylene	79-01-6	0.5
D041	2,4,5-Trichlorophenol	95-95-4	400.0
D042	2,4,6-Trichlorophenol	88-06-2	2.0
D043	Vinyl chloride	75-01-4	0.2

RCRA Hazardous Waste - D-List

Table 1-Maximum Concentration of Contaminants for the Toxicity Characteristic

EPA HW No. (*1)	Contaminant	CAS No. (*2)	Regulatory Level (mg/L)	
D004	Arsenic	7440-38-2	5.0	
D005	Barium	7440-39-3	100.0	
D018	Benzene	71-43-2	0.5	
D006	Cadmium	7440-43-9	1.0	
D019	Carbon tetrachloride	56-23-5	0.5	
D020	Chlordane	57-74-9	0.03	
D021	Chlorobenzene	108-90-7	100.0	
D022	Chloroform	67-66-3	6.0	
D007	Chromium	7440-47-3	5.0.	
D023	o-Cresol	95-48-7	200.0	(*4)
D024	m-Cresol	108-39-4	200.0	(*4)
D025	p-Cresol	106-44-5	200.0	(*4)
D026	Cresol	.....	200.0	(*4)
D016	2,4-D	94-75-7	10.0	
D027	1,4-Dichlorobenzene	106-46-7	7.5	
D028	1,2-Dichloroethane	107-06-2	0.5	
D029	1,1-Dichloroethylene	75-35-4	0.7	
D030	2,4-Dinitrotoluene	121-14-2	0.13	(*3)
D012	Endrin	72-20-8	0.02	
D031	Heptachlor (and its epoxide)	76-44-8	0.008	
D032	Hexachlorobenzene	118-74-1	0.13	(*3)
D033	Hexachlorobutadiene	87-68-3	0.5	
D034	Hexachloroethane	67-72-1	3.0	
D008	Lead	7439-92-1	5.0	
D013	Lindane	58-89-9	0.4	
D009	Mercury	7439-97-6	0.2	
D014	Methoxychlor	72-43-5	10.0	
D035	Methyl ethyl ketone	78-93-3	200.0	
D036	Nitrobenzene	98-95-3	2.0	
D037	Pentrachlorophenol	87-86-5	100.0	
D038	Pyridine	110-86-1	5.0	(*3)
D010	Selenium	7782-49-2	1.0	
D011	Silver	7440-22-4	5.0	
D039	Tetrachloroethylene	127-18-4	0.7	
D015	Toxaphene	8001-35-2	0.5	
D040	Trichloroethylene	79-01-6	0.5	
D041	2,4,5-Trichlorophenol	95-95-4	400.0	
D042	2,4,6-Trichlorophenol	88-06-2	2.0	
D017	2,4,5-TP (Silvex)	93-72-1	1.0	
D043	Vinyl chloride	75-01-4	0.2	

*1 Hazardous waste number.
*2 Chemical abstracts service number.
*3 Quantitation limit is greater than the calculated regulatory level. The quantitation limit therefore becomes the regulatory level.
` If o-, m-, and p-Cresol concentrations cannot be differentiated, the total cresol)26) concentration is used. The regulatory level of total cresol is 200 mg/l.

13/01

F Listed Hazardous Wastes

Hazardous Wastes from Non-Specific Sources (F-List)

F001	The following spent halogenated solvents used in degreasing: Tetrachloroethylene, trichloroethylene, methylene chloride, 1,1,1-trichloroethane, carbon tetrachloride, and chlorinated fluorocarbons; all spent solvent mixtures/blends used in degreasing containing, before use, a total of ten percent or more (by volume) of one or more of the above halogenated solvents or those solvents listed in F002, F004 and F005; and still bottoms from the recovery of these spent solvents and spent solvent mixtures.
F002	The following spent halogenated solvents: Tetrachloroethylene, methylene chloride, trichloroethylene, 1,1,1-trichloroethane, chlorobenzene, 1,1,2-trichloro-1,2,2-trifluoroethane, ortho-dichlorobenzene, trichlorofluoromethane, and 1,1,2-trichloroethane; all spent solvent mixtures/blends containing, before use, a total of ten percent or more (by volume) of one or more of the above halogenated solvents or those listed in F001, F004, or F005; and still bottoms from the recovery of these spent solvents and spent solvent mixtures.
F003	The following spent non-halogenated solvents: Xylene, acetone, ethyl acetate, ethyl benzene, ethyl ether, methyl isobutyl ketone, n-butyl alcohol, cyclohexanone, and methanol; all spent solvent mixtures/blends containing, before use, only the above spent non-halogenated solvents; and all spent solvent mixtures/blends containing, before use, one or more of the above non-halogenated solvents, and, a total of ten percent or more (by volume) of one or more of those solvents listed in F001, F002, F004, and F005; and still bottoms from the recovery of these spent solvents and spent solvent mixtures.
F004	The following spent non-halogenated solvents: Cresols and cresylic acid, and nitrobenzene; all spent solvent mixtures/blends containing, before use, a total of ten percent or more (by volume) of one or more of the above non-halogenated solvents or those solvents listed in F001, F002, and F005; and still bottoms from the recovery of these spent solvents and spent solvent mixtures.
F005	The following spent non-halogenated solvents: Toluene, methyl ethyl ketone, carbon disulfide, isobutanol, pyridine, benzene, 2-ethoxyethanol, and 2-nitropropane; all spent solvent mixtures/blends containing, before use, a total of ten percent or more (by volume) of one or more of the above non-halogenated solvents or those solvents listed in F001, F002, or F004; and still bottoms from the recovery of these spent solvents and spent solvent mixtures.
F006	Wastewater treatment sludges from electroplating operations except from the following processes: (1) Sulfuric acid anodizing of aluminum; (2) tin plating on carbon steel; (3) zinc plating (segregated basis) on carbon steel; (4) aluminum or zinc-aluminum plating on carbon steel; (5) cleaning/stripping associated with tin,

	zinc and aluminum plating on carbon steel; and (6) chemical etching and milling of aluminum.
F007	Spent cyanide plating bath solutions from electroplating operations.
F008	Plating bath residues from the bottom of plating baths from electroplating operations where cyanides are used in the process.
F009	Spent stripping and cleaning bath solutions from electroplating operations where cyanides are used in the process.
F010	Quenching bath residues from oil baths from metal heat treating operations where cyanides are used in the process.
F011	Spent cyanide solutions from salt bath pot cleaning from metal heat treating operations.
F012	Quenching waste water treatment sludges from metal heat treating operations where cyanides are used in the process.
F019	Wastewater treatment sludges from the chemical conversion coating of aluminum except from zirconium phosphating in aluminum can washing when such phosphating is an exclusive conversion coating process.
F020	Wastes (except wastewater and spent carbon from hydrogen chloride purification) from the production or manufacturing use (as a reactant, chemical intermediate, or component in a formulating process) of tri-or tetrachlorophenol, or of intermediates used to produce their pesticide derivatives. (This listing does not include wastes from the production of Hexachlorophene from highly purified 2,4,5-trichlorophenol.).
F021	Wastes (except wastewater and spent carbon from hydrogen chloride purification) from the production or manufacturing use (as a reactant, chemical intermediate, or component in a formulating process) of pentachlorophenol, or of intermediate used to produce its derivatives.
F022	Wastes (except wastewater and spent carbon from hydrogen chloride purification) from the manufacturing use (as a reactant, chemical intermediate, or component in a formulating process) of tetra-, penta-, or hexachlorobenzenes under alkaline conditions.
F023	Wastes (except wastewater and spent carbon from hydrogen chloride purification) from the production of materials on equipment previously used for the production or manufacturing use (as a reactant, chemical intermediate, or component in a formulating process) of tri-and tetrachlorophenols. (This listing does not include wastes from equipment used only for the production or use of Hexachlorophene from highly purified 2,4,5-trichlorophenol.).
F024	Process wastes, including but not limited to, distillation residues, heavy ends, tars, and reactor clean-out wastes, from the production of certain chlorinated aliphatic hydrocarbons by free radical catalyzed processes. These chlorinated aliphatic hydrocarbons are those having carbon chain lengths ranging from one to and including five, with varying amounts and positions of chlorine substitution. (This listing does not include wastewaters, wastewater treatment sludges, spent

	catalysts, and wastes listed in °261.31 or °261.32.).
F025	Condensed light ends, spent filters and filter aids, and spent desiccant wastes from the production of certain chlorinated aliphatic hydrocarbons, by free radical catalyzed processes. These chlorinated aliphatic hydrocarbons are those having carbon chain lengths ranging from one to and including five, with varying amounts and positions of chlorine substitution.
F026	Wastes (except wastewater and spent carbon from hydrogen chloride purification) from the production of materials on equipment previously used for the manufacturing use (as a reactant, chemical intermediate, or component in a formulating process) of tetra-, penta-, or hexachlorobenzene under alkaline conditions.
F027	Discarded unused formulations containing tri-, tetra-, or pentachlorophenol or discarded unused formulations containing compounds derived from these chlorophenols, (This listing does not include formulations containing Hexachlorophene synthesized from prepurified 2,4,5-trichlorophenol as the sole component.).
F028	Residues resulting from the incineration or thermal treatment of soil contaminated with EPA Hazardous Waste Nos. F020, F021, F022, F023, F026, and F027.
F032	Wastewaters, process residuals, preservative drippage, and spent formulations from wood preserving processes generated at plants that currently use or have previously used chlorophenolic formulations (except potentially cross-contaminated wastes that have had the F032 waste code deleted in accordance with ° 261.35 of this chapter and where the generator does not resume or initiate use of chlorophenolic formulations). This listing does not include K001 bottom sediment sludge from the treatment of wastewater from wood preserving processes that use crecsote and/or pentachlorophenol. (NOTE: The listing of wastewaters that have not come into contact with process contaminants is stayed administratively. The listing for plants have previously used chlorophenolic formulation is administratively stayed whenever these waste are covered by the F034 or F035 listings. These stays will remain in effect until further administrative action is taken.).
F034	Wastewaters, process residuals, preservative drippage, and spent formulations from wood preserving process generated at plants that use creosote formulations. This listing does not include K001 bottom sediment sludge from the treatment of wastewater from wood preserving processes that use creosote and/or pentachlorophenol. (Note: The listing of wastewaters that have not come into contact with process contaminants is stayed administratively. The stay will remain in effect until further administrative action is taken.).
F035	Wastewaters, process residuals, preservative drippage, and spent formulations from wood preserving process generated at plants that use inorganic preservatives containing arsenic or chromium. This listing does not include K001 bottom sediment sludge from the treatment of wastewater from wood preserving processes that use creosote and/or pentachlorophenol. (Note: The listing of wastewaters that have not come into contact with process contaminants is stayed

	administratively. The stay will remain in effect until further administrative action is taken.).
F037	Petroleum refinery primary oil/water/solids separation sludge-Any sludge generated from the gravitational separation of oil/water/solids during the storage or treatment of process wastewaters and oily cooling wastewaters from petroleum refineries. Such sludges include, but are not limited to, those generated in: oil/water/solids separators; tanks and impoundments; ditches and other conveyances; sumps; and stormwater units receiving dry weather flow. Sludge generated in stormwater units that do not receive dry weather flow, sludges generated from non-contact once-through cooling waters segregated for treatment from other process or oily cooling waters, sludges generated in aggressive biological treatment units as defined in ° 261.31 (b) (2) (including sludges generated in one or more additional units after wastewaters have been treated in aggressive biological treatment units) and K051 wastes are not included in this listing.
F038	Petroleum refinery secondary (emulsified) oil/water/solids separation sludge-Any sludge and/or float generated from the physical and/or chemical separation of oil/water/solids in process wastewaters and oily cooling wastewaters from petroleum refineries. Such wastes include, but are not limited to, all sludges and floats generated in: induced air flotation (IAF) units, tanks and impoundments, and all sludges generated in DAF units. Sludges generated in stormwater units that do not receive dry weather flow, sludges generated from non-contact once-through cooling waters segregated for treatment from other process or oily cooling waters, sludges and floats generated in aggressive biological treatment unit as defined in ° 261.31 (b) (2) (including sludges and floats generated in one or more additional units after wastewaters have been treated in aggressive biological treatment units) and F037, K048, and K051 wastes are not included in this listing.
F039	Leachate resulting from the treatment, storage, or disposal of wastes classified by more than one waste code under subpart D, or from a mixture of wastes classified under subparts C and D of this part. (Leachate resulting from the management of one or more of the following EPA Hazardous Wastes and no other hazardous wastes retains its hazardous waste code(s): F020, F021, F022, F023, F026, F027, and/or F028.).

The K-list (source-specific wastes). This list includes certain wastes from specific industries, such as petroleum refining or pesticide manufacturing. Certain sludges and wastewaters from treatment and production processes in these industries are examples of source-specific wastes. Wastes included on the K-list can be found in the regulations at 40 CFR §261.32

Industry and EPA hazardous waste No.	Hazardous waste	Hazard code
Wood preservation: K001	Bottom sediment sludge from the treatment of wastewaters from wood preserving processes that use creosote and/or pentachlorophenol	(T)
Inorganic pigments:		
K002	Wastewater treatment sludge from the production of chrome yellow and orange pigments	(T)
K003	Wastewater treatment sludge from the production of molybdate orange pigments	(T)
K004	Wastewater treatment sludge from the production of zinc yellow pigments	(T)
K005	Wastewater treatment sludge from the production of chrome green pigments	(T)
K006	Wastewater treatment sludge from the production of chrome oxide green pigments (anhydrous and hydrated)	(T)
K007	Wastewater treatment sludge from the production of iron blue pigments	(T)
K008	Oven residue from the production of chrome oxide green pigments	(T)
Organic chemicals:		
K009	Distillation bottoms from the production of acetaldehyde from ethylene	(T)
K010	Distillation side cuts from the production of acetaldehyde from ethylene	(T)
K011	Bottom stream from the wastewater stripper in the production of acrylonitrile	(R, T)
K013	Bottom stream from the acetonitrile column in the production of acrylonitrile	(R, T)
K014	Bottoms from the acetonitrile purification column in the production of acrylonitrile	(T)

	production of acrylonitrile	
K015	Still bottoms from the distillation of benzyl chloride	(T)
K016	Heavy ends or distillation residues from the production of carbon tetrachloride	(T)
K017	Heavy ends (still bottoms) from the purification column in the production of epichlorohydrin	(T)
K018	Heavy ends from the fractionation column in ethyl chloride production	(T)
K019	Heavy ends from the distillation of ethylene dichloride in ethylene dichloride production	(T)
K020	Heavy ends from the distillation of vinyl chloride in vinyl chloride monomer production	(T)
K021	Aqueous spent antimony catalyst waste from fluoromethanes production	(T)
K022	Distillation bottom tars from the production of phenol/acetone from cumene	(T)
K023	Distillation light ends from the production of phthalic anhydride from naphthalene	(T)
K024	Distillation bottoms from the production of phthalic anhydride from naphthalene	(T)
K025	Distillation bottoms from the production of nitrobenzene by the nitration of benzene	(T)
K026	Stripping still tails from the production of methy ethyl pyridines	(T)
K027	Centrifuge and distillation residues from toluene diisocyanate production	(R, T)
K028	Spent catalyst from the hydrochlorinator reactor in the production of 1,1,1-trichloroethane	(T)
K029	Waste from the product steam stripper in the production of 1,1,1-trichloroethane	(T)
K030	Column bottoms or heavy ends from the combined production of trichloroethylene and perchloroethylene	(T)
K083	Distillation bottoms from aniline production	(T)
K085	Distillation or fractionation column bottoms from the production of chlorobenzenes	(T)
K093	Distillation light ends from the production of phthalic	(T)

	anhydride from ortho-xylene	
K094	Distillation bottoms from the production of phthalic anhydride from ortho-xylene	(T)
K095	Distillation bottoms from the production of 1,1,1-trichloroethane	(T)
K096	Heavy ends from the heavy ends column from the production of 1,1,1-trichloroethane	(T)
K103	Process residues from aniline extraction from the production of aniline	(T)
K104	Combined wastewater streams generated from nitrobenzene/aniline production	(T)
K105	Separated aqueous stream from the reactor product washing step in the production of chlorobenzenes	(T)
K107	Column bottoms from product separation from the production of 1,1-dimethylhydrazine (UDMH) from carboxylic acid hydrazines	(C,T)
K108	Condensed column overheads from product separation and condensed reactor vent gases from the production of 1,1-dimethylhydrazine (UDMH) from carboxylic acid hydrazides	(I,T)
K109	Spent filter cartridges from product purification from the production of 1,1-dimethylhydrazine (UDMH) from carboxylic acid hydrazides	(T)
K110	Condensed column overheads from intermediate separation from the production of 1,1-dimethylhydrazine (UDMH) from carboxylic acid hydrazides	(T)
K111	Product washwaters from the production of dinitrotoluene via nitration of toluene	(C,T)
K112	Reaction by-product water from the drying column in the production of toluenediamine via hydrogenation of dinitrotoluene	(T)
K113	Condensed liquid light ends from the purification of toluenediamine in the production of toluenediamine via hydrogenation of dinitrotoluene	(T)
K114	Vicinals from the purification of toluenediamine in the production of toluenediamine via hydrogenation of dinitrotoluene	(T)
K115	Heavy ends from the purification of toluenediamine in the	(T)

	production of toluenediamine via hydrogenation of dinitrotoluene	
K116	Organic condensate from the solvent recovery column in the production of toluene diisocyanate via phosgenation of toluenediamine	(T)
K117	Wastewater from the reactor vent gas scrubber in the production of ethylene dibromide via bromination of ethene	(T)
K118	Spent adsorbent solids from purification of ethylene dibromide in the production of ethylene dibromide via bromination of ethene	(T)
K136	Still bottoms from the purification of ethylene dibromide in the production of ethylene dibromide via bromination of ethene	(T)
K149	Distillation bottoms from the production of alpha- (or methyl-) chlorinated toluenes, ring-chlorinated toluenes, benzoyl chlorides, and compounds with mixtures of these functional groups, (This waste does not include still bottoms from the distillation of benzyl chloride.)	(T)
K150	Organic residuals, excluding spent carbon adsorbent, from the spent chlorine gas and hydrochloric acid recovery processes associated with the production of alpha- (or methyl-) chlorinated toluenes, ring-chlorinated toluenes, benzoyl chlorides, and compounds with mixtures of these functional groups	(T)
K151	Wastewater treatment sludges, excluding neutralization and biological sludges, generated during the treatment of wastewaters from the production of alpha- (or methyl-) chlorinated toluenes, ring-chlorinated toluenes, benzoyl chlorides, and compounds with mixtures of these functional groups	(T)
K156	Organic waste (including heavy ends, still bottoms, light ends, spent solvents, filtrates, and decantates) from the production of carbamates and carbamoyl oximes. (This listing does not apply to wastes generated from the manufacture of 3-iodo-2-propynyl n-butylcarbamate.)	(T)
K157	Wastewaters (including scrubber waters, condenser waters, washwaters, and separation waters) from the production of carbamates and carbamoyl oximes. (This listing does not apply to wastes generated from the manufacture of 3-iodo-2-propynyl n-butylcarbamate.)	(T)

K158	Bag house dusts and filter/separation solids from the production of carbamates and carbamoyl oximes. (This listing does not apply to wastes generated from the manufacture of 3-iodo-2-propynyl n-butylcarbamate.)	(T)
K159	Organics from the treatment of thiocarbamate wastes	(T)
K161	Purification solids (including filtration, evaporation, and centrifugation solids), bag house dust and floor sweepings from the production of dithiocarbamate acids and their salts. (This listing does not include K125 or K126.)	(R,T)
K174	Wastewater treatment sludges from the production of ethylene dichloride or vinyl chloride monomer (including sludges that result from commingled ethylene dichloride or vinyl chloride monomer wastewater and other wastewater), unless the sludges meet the following conditions: (i) they are disposed of in a subtitle C or non-hazardous landfill licensed or permitted by the state or federal government; (ii) they are not otherwise placed on the land prior to final disposal; and (iii) the generator maintains documentation demonstrating that the waste was either disposed of in an on-site landfill or consigned to a transporter or disposal facility that provided a written commitment to dispose of the waste in an off-site landfill. Respondents in any action brought to enforce the requirements of subtitle C must, upon a showing by the government that the respondent managed wastewater treatment sludges from the production of vinyl chloride monomer or ethylene dichloride, demonstrate that they meet the terms of the exclusion set forth above. In doing so, they must provide appropriate documentation (e.g., contracts between the generator and the landfill owner/operator, invoices documenting delivery of waste to landfill, etc.) that the terms of the exclusion were met	(T)
K175	Wastewater treatment sludges from the production of vinyl chloride monomer using mercuric chloride catalyst in an acetylene-based process	(T)
K181	Nonwastewaters from the production of dyes and/or pigments (including nonwastewaters commingled at the point of generation with nonwastewaters from other processes) that, at the point of generation, contain mass loadings of any of the constituents identified in paragraph (c) of this section that are equal to or greater than the corresponding paragraph (c) levels, as determined on a calendar year basis. These wastes will not be hazardous if the nonwastewaters are: (i) disposed in a Subtitle D landfill unit	(T)

	subject to the design criteria in §258.40, (ii) disposed in a Subtitle C landfill unit subject to either §264.301 or §265.301, (iii) disposed in other Subtitle D landfill units that meet the design criteria in §258.40, §264.301, or §265.301, or (iv) treated in a combustion unit that is permitted under Subtitle C, or an onsite combustion unit that is permitted under the Clean Air Act. For the purposes of this listing, dyes and/or pigments production is defined in paragraph (b)(1) of this section. Paragraph (d) of this section describes the process for demonstrating that a facility's nonwastewaters are not K181. This listing does not apply to wastes that are otherwise identified as hazardous under §§261.21–261.24 and 261.31–261.33 at the point of generation. Also, the listing does not apply to wastes generated before any annual mass loading limit is met	
Inorganic chemicals:		
K071	Brine purification muds from the mercury cell process in chlorine production, where separately prepurified brine is not used	(T)
K073	Chlorinated hydrocarbon waste from the purification step of the diaphragm cell process using graphite anodes in chlorine production	(T)
K106	Wastewater treatment sludge from the mercury cell process in chlorine production	(T)
K176	Baghouse filters from the production of antimony oxide, including filters from the production of intermediates (e.g., antimony metal or crude antimony oxide)	(E)
K177	Slag from the production of antimony oxide that is speculatively accumulated or disposed, including slag from the production of intermediates (e.g., antimony metal or crude antimony oxide)	(T)
K178	Residues from manufacturing and manufacturing-site storage of ferric chloride from acids formed during the production of titanium dioxide using the chloride-ilmenite process	(T)
Pesticides:		
K031	By-product salts generated in the production of MSMA and cacodylic acid	(T)
K032	Wastewater treatment sludge from the production of chlordane	(T)

K033	Wastewater and scrub water from the chlorination of cyclopentadiene in the production of chlordane	(T)
K034	Filter solids from the filtration of hexachlorocyclopentadiene in the production of chlordane	(T)
K035	Wastewater treatment sludges generated in the production of creosote	(T)
K036	Still bottoms from toluene reclamation distillation in the production of disulfoton	(T)
K037	Wastewater treatment sludges from the production of disulfoton	(T)
K038	Wastewater from the washing and stripping of phorate production	(T)
K039	Filter cake from the filtration of diethylphosphorodithioic acid in the production of phorate	(T)
K040	Wastewater treatment sludge from the production of phorate	(T)
K041	Wastewater treatment sludge from the production of toxaphene	(T)
K042	Heavy ends or distillation residues from the distillation of tetrachlorobenzene in the production of 2,4,5-T	(T)
K043	2,6-Dichlorophenol waste from the production of 2,4-D	(T)
K097	Vacuum stripper discharge from the chlordane chlorinator in the production of chlordane	(T)
K098	Untreated process wastewater from the production of toxaphene	(T)
K099	Untreated wastewater from the production of 2,4-D	(T)
K123	Process wastewater (including supernates, filtrates, and washwaters) from the production of ethylenebisdithiocarbamic acid and its salt	(T)
K124	Reactor vent scrubber water from the production of ethylenebisdithiocarbamic acid and its salts	(C, T)
K125	Filtration, evaporation, and centrifugation solids from the production of ethylenebisdithiocarbamic acid and its salts	(T)
K126	Baghouse dust and floor sweepings in milling and packaging operations from the production or formulation of ethylenebisdithiocarbamic acid and its salts	(T)
K131	Wastewater from the reactor and spent sulfuric acid from the	(C, T)

	acid dryer from the production of methyl bromide	
K132	Spent absorbent and wastewater separator solids from the production of methyl bromide	(T)
Explosives:		
K044	Wastewater treatment sludges from the manufacturing and processing of explosives	(R)
K045	Spent carbon from the treatment of wastewater containing explosives	(R)
K046	Wastewater treatment sludges from the manufacturing, formulation and loading of lead-based initiating compounds	(T)
K047	Pink/red water from TNT operations	(R)
Petroleum refining:		
K048	Dissolved air flotation (DAF) float from the petroleum refining industry	(T)
K049	Slop oil emulsion solids from the petroleum refining industry	(T)
K050	Heat exchanger bundle cleaning sludge from the petroleum refining industry	(T)
K051	API separator sludge from the petroleum refining industry	(T)
K052	Tank bottoms (leaded) from the petroleum refining industry	(T)
K169	Crude oil storage tank sediment from petroleum refining operations	(T)
K170	Clarified slurry oil tank sediment and/or in-line filter/separation solids from petroleum refining operations	(T)
K171	Spent Hydrotreating catalyst from petroleum refining operations, including guard beds used to desulfurize feeds to other catalytic reactors (this listing does not include inert support media)	(I,T)
K172	Spent Hydrorefining catalyst from petroleum refining operations, including guard beds used to desulfurize feeds to other catalytic reactors (this listing does not include inert support media)	(I,T)
Iron and steel:		
K061	Emission control dust/sludge from the primary production of steel in electric furnaces	(T)
K062	Spent pickle liquor generated by steel finishing operations of	(C,T)

	facilities within the iron and steel industry (SIC Codes 331 and 332)	
Primary copper:		
Primary lead:		
Primary zinc:		
Primary aluminum:		
K088	Spent potliners from primary aluminum reduction	(T)
Ferroalloys:		
Secondary lead:		
K069	Emission control dust/sludge from secondary lead smelting. (Note: This listing is stayed administratively for sludge generated from secondary acid scrubber systems. The stay will remain in effect until further administrative action is taken. If EPA takes further action effecting this stay, EPA will publish a notice of the action in the**Federal Register**)	(T)
K100	Waste leaching solution from acid leaching of emission control dust/sludge from secondary lead smelting	(T)
Veterinary pharmaceuticals:		
K084	Wastewater treatment sludges generated during the production of veterinary pharmaceuticals from arsenic or organo-arsenic compounds	(T)
K101	Distillation tar residues from the distillation of aniline-based compounds in the production of veterinary pharmaceuticals from arsenic or organo-arsenic compounds	(T)
K102	Residue from the use of activated carbon for decolorization in the production of veterinary pharmaceuticals from arsenic or organo-arsenic compounds	(T)
Ink formulation:		
K086	Solvent washes and sludges, caustic washes and sludges, or water washes and sludges from cleaning tubs and equipment used in the formulation of ink from pigments, driers, soaps, and stabilizers containing chromium and lead	(T)
Coking:		
K060	Ammonia still lime sludge from coking operations	(T)

K087	Decanter tank tar sludge from coking operations	(T)
K141	Process residues from the recovery of coal tar, including, but not limited to, collecting sump residues from the production of coke from coal or the recovery of coke by-products produced from coal. This listing does not include K087 (decanter tank tar sludges from coking operations)	(T)
K142	Tar storage tank residues from the production of coke from coal or from the recovery of coke by-products produced from coal	(T)
K143	Process residues from the recovery of light oil, including, but not limited to, those generated in stills, decanters, and wash oil recovery units from the recovery of coke by-products produced from coal	(T)
K144	Wastewater sump residues from light oil refining, including, but not limited to, intercepting or contamination sump sludges from the recovery of coke by-products produced from coal	(T)
K145	Residues from naphthalene collection and recovery operations from the recovery of coke by-products produced from coal	(T)
K147	Tar storage tank residues from coal tar refining	(T)
K148	Residues from coal tar distillation, including but not limited to, still bottoms	(T)

RCRA Hazardous Waste - P-List

40 CFR 261.33(e)

(e) The commercial chemical products, manufacturing chemical intermediates or off-specification commercial chemical products or manufacturing chemical intermediates referred to in paragraph (a) through (d) of this section, are identified as acute hazardous wastes (H) and are subject to be the small quantity exclusion defined in §261.5(e).

Comment: For the convenience of the regulated community the primary hazardous properties of these materials have been indicated by the letters T (Toxicity), and R (Reactivity). Absence of a letter indicates that the compound only is listed for acute toxicity.

These wastes and their corresponding EPA Hazardous Waste Numbers are:

Hazardous waste No.	Chemical abstracts No.	Substance
P023	107-20-0	Acetaldehyde, chloro-
P002	591-08-2	Acetamide, N-(aminothioxomethyl)-
P057	640-19-7	Acetamide, 2-fluoro-
P058	62-74-8	Acetic acid, fluoro-, sodium salt
P002	591-08-2	1-Acetyl-2-thiourea
P003	107-02-8	Acrolein
P070	116-06-3	Aldicarb
P203	1646-88-4	Aldicarb sulfone.
P004	309-00-2	Aldrin
P005	107-18-6	Allyl alcohol
P006	20859-73-8	Aluminum phosphide (R,T)
P007	2763-96-4	5-(Aminomethyl)-3-isoxazolol
P008	504-24-5	4-Aminopyridine
P009	131-74-8	Ammonium picrate (R)
P119	7803-55-6	Ammonium vanadate
P099	506-61-6	Argentate(1-), bis(cyano-C)-, potassium
P010	7778-39-4	Arsenic acid H3AsO4
P012	1327-53-3	Arsenic oxide As203
P011	1303-28-2	Arsenic oxide As205
P011	1303-28-2	Arsenic pentoxide
P012	1327-53-3	Arsenic trioxide
P038	692-42-2	Arsine, diethyl-
P036	696-28-6	Arsonous dichloride, phenyl-
P054	151-56-4	Aziridine
P067	75-55-8	Aziridine, 2-methyl-
[illegible]	542-62-1	Barium cyanide
[illegible]	106-47-8	Benzenamine, 4-chloro-
[illegible]	100-01-6	Benzenamine, 4-nitro-
P028	100-44-7	Benzene, (chloromethyl)-

RCRA Hazardous Waste - P-List

P042		51-43-4	1,2-Benzenediol, 4-[1-hydroxy-2-(methylamino)ethyl]-, (R)-
P046		122-09-8	Benzeneethanamine, alpha,alpha-dimethyl-
P014		108-98-5	Benzenethiol
P127		1563-66-2	7-Benzofuranol, 2,3-dihydro-2,2-dimethyl-, methylcarbamate.
P188		57-64-7	Benzoic acid, 2-hydroxy-, compd. with (3aS-cis)-1,2,3,3a,8,8a-hexahydro-1,3a,8-trimethylpyrrolo[2,3-b]indol-5-yl methylcarbamate ester (1:1).
P001	81-81-2	(*1)	2H-1-Benzopyran-2-one, 4-hydroxy-3-(3-oxo-1-phenylbutyl)-, & salts, when present at concentrations greater than 0.3%
P028		100-44-7	Benzyl chloride
P015		7440-41-7	Beryllium powder
P017		598-31-2	Bromoacetone
P018		357-57-3	Brucine
P045		39196-18-4	2-Butanone, 3,3-dimethyl-1-(methylthio)-, ...O-[methylamino)carbonyl] oxime
P021		592-01-8	Calcium cyanide
P021		592-01-8	Calcium cyanide $Ca(CN)_2$
P189		55285-14-8	Carbamic acid, [(dibutylamino)-thio]methyl-, 2,3-dihydro-2,2-dimethyl-7-benzofuranyl ester.
P191		644-64-4	Carbamic acid, dimethyl-, 1-[(dimethyl-amino)carbonyl]- 5-methyl-1H-pyrazol-3-yl ester.
P192		119-38-0	Carbamic acid, dimethyl-, 3-methyl-1- (1-methylethyl)-1H- pyrazol-5-yl ester.
P190		1129-41-5	Carbamic acid, methyl-, 3-methylphenyl ester.
P127		1563-66-2	Carbofuran.
P022		75-15-0	Carbon disulfide
P095		75-44-5	Carbonic dichloride
P189		55285-14-8	Carbosulfan.
P023		107-20-0	Chloroacetaldehyde
P024		106-47-8	p-Chloroaniline
P026		5344-82-1	1-(o-Chlorophenyl)thiourea
7		542-76-7	3-Chloropropionitrile
9		544-92-3	Copper cyanide
29		544-92-3	Copper cyanide Cu(CN)
_02		64-00-6	m-Cumenyl methylcarbamate.

RCRA Hazardous Waste - P-List

Hazardous waste No.	Chemical abstracts No.	Substance
P030	.....	Cyanides (soluble cyanide salts), not otherwise specified
P031	460-19-5	Cyanogen
P033	506-77-4	Cyanogen chloride
P033	506-77-4	Cyanogen chloride (CN)Cl
P034	131-89-5	2-Cyclohexyl-4,6-dinitrophenol
P016	542-88-1	Dichloromethyl ether
P036	696-28-6	Dichlorophenylarsine
P037	60-57-1	Dieldrin
P038	692-42-2	Diethylarsine
P041	311-45-5	Diethyl-p-nitrophenyl phosphate
P040	297-97-2	O,O-Diethyl O-pyrazinyl phosphorothioate
P043	55-91-4	Diisopropylfluorophosphate (DFP)
P004	309-00-2	1,4,5,8-Dimethanonaphthalene, 1,2,3,4,10,10-hexa-chloro-1,4,4a,5,8,8a,-hexahydro-, (1alpha,4alpha,4abeta,5alpha,8alpha,8abeta)-
P060	465-73-6	1,4,5,8-Dimethanonaphthalene, 1,2,3,4,10,10-hexa-chloro-1,4,4a,5,8,8a-hexahydro-, (1alpha,4alpha,4abeta,5beta,8beta,8abeta)-
P037	60-57-1	2,7:3,6-Dimethanonaphth [2,3-b]oxirene, 3,4,5,6,9,9-hexachloro-1a,2,2a,3,6,6a,7,7a-octahydro-, (1aalpha,2beta,2aalpha,3beta,6beta, 6aalpha,7beta,7aalpha)-
P051	72-20 -8 (*1)	2,7:3,6-Dimethanonaphth [2,3-b]oxirene, 3,4,5,6,9,9-hexachloro-1a,2,2a,3,6,6a,7,7a-octahydro-, (1aalpha,2beta,2abeta,3alpha,6alpha, 6abeta,7beta,7aalpha)-, & metabolites
P044	60-51-5	Dimethoate
P191	644-64-4	Dimetilan.
P046	122-09-8	alpha,alpha-Dimethylphenethylamine
P047	534-52-1 (*1)	4,6-Dinitro-o-cresol, & salts
P048	51-28-5	2,4-Dinitrophenol

RCRA Hazardous Waste - P-List

P020	88-85-7	Dinoseb
P085	152-16-9	Diphosphoramide, octamethyl-
P111	107-49-3	Diphosphoric acid, tetraethyl ester
P039	298-04-4	Disulfoton
P049	541-53-7	Dithiobiuret
P185	26419-73-8	1,3-Dithiolane-2-carboxaldehyde, 2,4-dimethyl-, O-[(methylamino)-carbonyl]oxime.
P050	115-29-7	Endosulfan
P088	145-73-3	Endothall
P051	72-20-8	Endrin
P051	72-20-8	Endrin, & metabolites
P042	51-43-4	Epinephrine
P031	460-19-5	Ethanedinitrile
P194	23135-22-0	Ethanimidothioc acid, 2-(dimethylamino)-N-[[(methylamino) carbonyl]oxy]-2-oxo-, methyl ester.
P066	16752-77-5	Ethanimidothioic acid,...N-[[(methylamino)carbonyl]oxy]-, methyl ester
P101	107-12-0	Ethyl cyanide
054	151-56-4	Ethyleneimine
P097	52-85-7	Famphur
P056	7782-41-4	Fluorine
P057	640-19-7	Fluoroacetamide
P058	62-74-8	Fluoroacetic acid, sodium salt
P198	23422-53-9	Formetanate hydrochloride.
P197	17702-57-7	Formparanate.
P065	628-86-4	Fulminic acid, mercury(2+) salt (R,T)
P059	76-44-8	Heptachlor
P062	757-58-4	Hexaethyl tetraphosphate
P116	79-19-6	Hydrazinecarbothioamide
P068	60-34-4	Hydrazine, methyl-
P063	74-90-8	Hydrocyanic acid
P063	74-90-8	Hydrogen cyanide
P096	7803-51-2	Hydrogen phosphide
P060	465-73-6	Isodrin
P192	119-38-0	Isolan.
P202	64-00-6	3-Isopropylphenyl N-methylcarbamate.
P007	2763-96-4	3(2H)-Isoxazolone, 5-(aminomethyl)-
P196	15339-36-3	Manganese, bis(dimethylcarbamodithioato-S, S')-,
P196	15339-36-3	Manganese dimethyldithiocarbamate.
092	62-38-4	Mercury, (acetato-O)phenyl-
65	628-86-4	Mercury fulminate (R,T)
082	62-75-9	Methanamine, N-methyl-N-nitroso-

P064	624-83-9	Methane, isocyanato-
P016	542-88-1	Methane, oxybis[chloro-
P112	509-14-8	Methane, tetranitro- (R)
P118	75-70-7	Methanethiol, trichloro-
P198	23422-53-9	Methanimidamide, N,N-dimethyl-N'-[3-[[(methylamino)-carbonyl]oxy] phenyl]-, monohydrochloride.
P197	17702-57-7	Methanimidamide, N,N-dimethyl-N'-[2-methyl-4 -[[(methylamino)carbonyl]oxy]phenyl]-
P050	115-29-7	6,9-Methano-2,4,3-benzodioxathiepin, 6,7,8,9,10,10-...hexachloro-1,5,5a,6,9,9a-hexahydro-, 3-oxide
P059	76-44-8	4,7-Methano-1H-indene, 1,4,5,6,7,8,8-heptachloro-...3a,4,7,7a-tetrahydro-
P199	2032-65-7	Methiocarb.
P066	16752-77-5	Methomyl
P068	60-34-4	Methyl hydrazine
P064	624-83-9	Methyl isocyanate
P069	75-86-5	2-Methyllactonitrile
P071	298-00-0	Methyl parathion
P190	1129-41-5	Metolcarb.
P128	315-18-4	Mexacarbamate
P072	86-88-4	alpha-Naphthylthiourea
P073	13463-39-3	Nickel carbonyl
P073	13463-39-3	Nickel carbonyl Ni(CO)4, (T-4)-
P074	557-19-7	Nickel cyanide
P074	557-19-7	Nickel cynaide Ni(CN)2
P075	54-11 -5 (*1)	Nicotine, & salts
P076	10102-43-9	Nitric oxide
P077	100-01-6	p-Nitroaniline
P078	10102-44-0	Nitrogen dioxide
P076	10102-43-9	Nitrogen oxide NO
P078	10102-44-0	Nitrogen oxide NO2
P081	55-63-0	Nitroglycerine (R)
P082	62-75-9	N-Nitrosodimethylamine
P084	4549-40-0	N-Nitrosomethylvinylamine
P085	152-16-9	Octamethylpyrophosphoramide
P087	20816-12-0	Osmium oxide OsO4, (T-4)-
P087	20816-12-0	Osmium tetroxide
P088	145-73-3	7-Oxabicyclo[2.2.1]heptane-2,3-dicarboxylic acid
P194	23135-22-0	Oxamyl.
P089	56-38-2	Parathion
P034	131-89-5	Phenol, 2-cyclohexyl-4,6-dinitro-
P048	51-28-5	Phenol, 2,4-dinitro-
P047	534-52-1 (*1)	Phenol, 2-methyl-4,6-dinitro-, & salts

P020	88-85-7	Phenol, 2-(1-methylpropyl)-4,6-dinitro-
P009	131-74-8	Phenol, 2,4,6-trinitro-, ammonium salt (R)
P128	315-18-4	Phenol, 4-(dimethylamino)-3,5-dimethyl-, methylcarbamate (ester).
P199	2032-65-7	Phenol, (3,5-dimethyl-4-(methylthio)-, methylcarbamate
P202	64-00-6	Phenol, 3-(1-methylethyl)-, methyl carbamate.
P201	2631-37-0	Phenol, 3-methyl-5-(1-methylethyl)-, methyl carbamate.
P092	62-38-4	Phenylmercury acetate
P093	103-85-5	Phenylthiourea
P094	298-02-2	Phorate
P095	75-44-5	Phosgene

Hazardous waste No.	Chemical abstracts No.	Substance
P096	7803-51-2	Phosphine
P041	311-45-5	Phosphoric acid, diethyl 4-nitrophenyl ester
P039	298-04-4	Phosphorodithioic acid, O,O-diethyl...S- [2-(ethylthio)ethyl] ester
P094	298-02-2	Phosphorodithioic acid, O,O-diethyl...S- [(ethylthio)methyl] ester
P044	60-51-5	Phosphorodithioic acid, O,O-dimethyl S- [2-(methylamino)-2-oxoethyl] ester
P043	55-91-4	Phosphorofluoridic acid, bis(1-methylethyl) ester
P089	56-38-2	Phosphorothioic acid, O,O-diethyl O-(4-nitro-phenyl) ester
P040	297-97-2	Phosphorothioic acid, O,O-diethyl O-pyrazinyl ester
P097	52-85-7	Phosphorothioic acid,...O-[4-[(dimethylami-no)sulfonyl]phenyl] O,O-dimethyl ester
'71	298-00-0	Phosphorothioic acid, O,O,-dimethyl O-(4-ni-

			trophenyl) ester
P204		57-47-6	Physostigmine.
P188		57-64-7	Physostigmine salicylate.
P110		78-00-2	Plumbane, tetraethyl-
P204		57-47-6	Physostigmine.
P188		57-64-7	Physostigmine salicylate.
P098		151-50-8	Potassium cyanide
P098		151-50-8	Potassium cyanide K(CN)
P099		506-61-6	Potassium silver cyanide
P201		2631-37-0	Promecarb
P203		1646-88-4	Propanal, 2-methyl-2-(methyl-sulfonyl)-, O-[(methylamino)carbonyl] oxime.
P070		116-06-3	Propanal, 2-methyl-2-(methylthio)-,...O-[(methylamino)carbonyl]oxime
P101		107-12-0	Propanenitrile
P027		542-76-7	Propanenitrile, 3-chloro-
P069		75-86-5	Propanenitrile, 2-hydroxy-2-methyl-
P081		55-63-0	1,2,3-Propanetriol, trinitrate (R)
P017		598-31-2	2-Propanone, 1-bromo-
P102		107-19-7	Propargyl alcohol
P003		107-02-8	2-Propenal
P005		107-18-6	2-Propen-1-ol
P067		75-55-8	1,2-Propylenimine
P102		107-19-7	2-Propyn-1-ol
P008		504-24-5	4-Pyridinamine
P075	(*1)	54-11-5	Pyridine, 3-(1-methyl-2-pyrrolidinyl)-, (S)-, & salts
P204		57-47-6	Pyrrolo[2,3-b]indol-5-ol, 1,2,3,3a,8,8a-hex-ahydro-1,3a,8-trimethyl-, methylcarbamate (ester), (3aS-cis)-.
P114		12039-52-0	Selenious acid, dithallium(1+) salt
P103		630-10-4	Selenourea
P104		506-64-9	Silver cyanide
P104		506-64-9	Silver cyanide Ag(CN)
P105		26628-22-8	Sodium azide
P106		143-33-9	Sodium cyanide
P106		143-33-9	Sodium cyanide Na(CN)
P108	(*1)	157-24-9	Strychnidin-10-one, & salts
P018		357-57-3	Strychnidin-10-one, 2,3-dimethoxy-
P108	(*1)	57-24-9	Strychnine, & salts
P115		7446-18-6	Sulfuric acid, dithallium(1+) salt
P109		3689-24-5	Tetraethyldithiopyrophosphate
P110		78-00-2	Tetraethyl lead
P111		107-49-3	Tetraethyl pyrophosphate
P112		509-14-8	Tetranitromethane (R)
P062		757-58-4	Tetraphosphoric acid, hexaethyl

			ester
P113		1314-32-5	Thallic oxide
P113		1314-32-5	Thallium oxide Tl2O3
P114		12039-52-0	Thallium(I) selenite
P115		7446-18-6	Thallium(I) sulfate
P109		3689-24-5	Thiodiphosphoric acid, tetraethyl ester
P045		39196-18-4	Thiofanox
P049		541-53-7	Thioimidodicarbonic diamide [(H2 N)C(S)]2NH
P014		108-98-5	Thiophenol
P116		79-19-6	Thiosemicarbazide
P026		5344-82-1	Thiourea, (2-chlorophenyl)-
P072		86-88-4	Thiourea, 1-naphthalenyl-
P093		103-85-5	Thiourea, phenyl-
P185		26419-73-8	Tirpate.
P123		8001-35-2	Toxaphene
P118		75-70-7	Trichloromethanethiol
P119		7803-55-6	Vanadic acid, ammonium salt
P120		1314-62-1	Vanadium oxide V2O5
P120		1314-62-1	Vanadium pentoxide
P084		4549-40-0	Vinylamine, N-methyl-N-nitroso-
P001	(*1)	81-81-2	Warfarin, & salts, when present at concentrations greater than 0.3%
P205		137-30-4	Zinc, bis(dimethylcarbamodithioato- S,S')-,
P121		557-21-1	Zinc cyanide
P121		557-21-1	Zinc cyanide Zn(CN)2
P122		1314-84-7	Zinc phosphide Zn3P2, when present at concentrations greater than 10% (R,T)
P205		137-30-4	Ziram.

(*1) CAS Number given for parent compound only.

[§261.33(e) table amended at 59 FR 31551, June 20, 1994; revised at 60 FR 7848, Feb. 9, 1995; corrected at 60 FR 19165, April 17, 1995; 60 FR 25620, May 12, 1995]

RCRA Hazardous Waste - U-List

		[1aS-(1aalpha, 8beta,8aalpha,8balpha)]-
U280	101-27-9	Barban.
U278	22781-23-3	Bendiocarb.
U364	22961-82-6	Bendiocarb phenol.
U271	17804-35-2	Benomyl.
U157	56-49-5	Benz[j]aceanthrylene, 1,2-dihydro-3-methyl-
U016	225-51-4	Benz[c]acridine
U017	98-87-3	Benzal chloride
U192	23950-58-5	Benzamide, 3,5-dichloro-N-(1,1-dimethyl -2-propynyl)-
U018	56-55-3	Benz[a]anthracene
U094	57-97-6	Benz[a]anthracene, 7,12-dimethyl-
U012	62-53-3	Benzenamine (I,T)
U014	492-80-8	Benzenamine, 4,4'-carbonimidoylbis [N,N-dimethyl-
U049	3165-93-3	Benzenamine, 4-chloro-2-methyl-, hydrochloride
U093	60-11-7	Benzenamine, N,N-dimethyl-4-(phenylazo)-
U328	95-53-4	Benzenamine, 2-methyl-
U353	106-49-0	Benzenamine, 4-methyl-
U158	101-14-4	Benzenamine, 4,4'-methylenebis[2-chloro-
U222	636-21-5	Benzenamine, 2-methyl-, hydrochloride
U181	99-55-8	Benzenamine, 2-methyl-5-nitro-
U019	71-43-2	Benzene (I,T)
U038	510-15-6	Benzeneacetic acid, 4-chloro-alpha-(4-chlo- rophenyl)-alpha-hydroxy-, ethyl ester
U030	101-55-3	Benzene, 1-bromo-4-phenoxy-
U035	305-03-3	Benzenebutanoic acid, 4-[bis(2- chloroethyl)amino]-
U037	108-90-7	Benzene, chloro-
U221	25376-45-8	Benzenediamine, ar-methyl-
U028	117-81-7	1,2-Benzenedicarboxylic acid, bis(2-ethylhexyl) ester
U069	84-74-2	1,2-Benzenedicarboxylic acid, dibutyl ester
U088	84-66-2	1,2-Benzenedicarboxylic acid, diethyl ester
U102	131-11-3	1,2-Benzenedicarboxylic acid, dimethyl ester
U107	117-84-0	1,2-Benzenedicarboxylic acid, dioctyl ester
U070	95-50-1	Benzene, 1,2-dichloro-
71	541-73-1	Benzene, 1,3-dichloro-
72	106-46-7	Benzene, 1,4-dichloro-
`60	72-54-8	Benzene, 1,1'-(2,2-

RCRA Hazardous Waste - U-List

		dichloroethylidene)bis [4-chloro-
U017	98-87-3	Benzene, (dichloromethyl)-
U223	26471-62-5	Benzene, 1,3-diisocyanatomethyl- (R,T)
U239	1330-20-7	Benzene, dimethyl- (I,T)
U201	108-46-3	1,3-Benzenediol
U127	118-74-1	Benzene, hexachloro-
U056	110-82-7	Benzene, hexahydro- (I)
U220	108-88-3	Benzene, methyl-
U105	121-14-2	Benzene, 1-methyl-2,4-dinitro-
U106	606-20-2	Benzene, 2-methyl-1,3-dinitro-
U055	98-82-8	Benzene, (1-methylethyl)- (I)
U169	98-95-3	Benzene, nitro-
U183	608-93-5	Benzene, pentachloro-
U185	82-68-8	Benzene, pentachloronitro-
U020	98-09-9	Benzenesulfonic acid chloride (C,R)
U020	98-09-9	Benzenesulfonyl chloride (C,R)
U207	95-94-3	Benzene, 1,2,4,5-tetrachloro-
U061	50-29-3	Benzene, 1,1'-(2,2,2-trichloroethylidene)bis [4-chloro-
U247	72-43-5	Benzene, 1,1'-(2,2,2-trichloroethylidene)bis [4 - methoxy-
U023	98-07-7	Benzene, (trichloromethyl)-
U234	99-35-4	Benzene, 1,3,5-trinitro-
U021	92-87-5	Benzidine
U202	181-07-2	1,2-Benzisothiazol-3(2H)-one, 1,1-dioxide, & salts
U364	22961-82-6	1,3-Benzodioxol-4-ol, 2,2-dimethyl-,
U278	22781-23-3	1,3-Benzodioxol-4-ol, 2,2-dimethyl-, methyl carbamate.
U203	94-59-7	1,3-Benzodioxole, 5-(2-propenyl)-
U141	120-58-1	1,3-Benzodioxole, 5-(1-propenyl)-
U090	94-58-6	1,3-Benzodioxole, 5-propyl-
U367	1563-38-8	7-Benzofuranol, 2,3-dihydro-2,2-dimethyl-
U064	189-55-9	Benzo[rst]pentaphene

Hazardous waste No.	Chemical abstracts No.	Substance

RCRA Hazardous Waste - U-List

U248	181-81-2	2H-1-Benzopyran-2-one, 4-hydroxy-3-(3-oxo-1-phenyl-butyl)-, & salts, when present at concentrations of 0.3% or less
U022	50-32-8	Benzo[a]pyrene
U197	106-51-4	p-Benzoquinone
U023	98-07-7	Benzotrichloride (C,R,T)
U085	1464-53-5	2,2'-Bioxirane
U021	92-87-5	[1,1'-Biphenyl]-4,4'-diamine
U073	91-94-1	[1,1'-Biphenyl]-4,4'-diamine, 3,3'-dichloro-
U091	119-90-4	[1,1'-Biphenyl]-4,4'-diamine, 3,3'-dimethoxy-
U095	119-93-7	[1,1'-Biphenyl]-4,4'-diamine, 3,3'-dimethyl-
U225	75-25-2	Bromoform
U030	101-55-3	4-Bromophenyl phenyl ether
U128	87-68-3	1,3-Butadiene, 1,1,2,3,4,4-hexachloro-
U172	924-16-3	1-Butanamine, N-butyl-N-nitroso-
U031	71-36-3	1-Butanol (I)
U159	78-93-3	2-Butanone (I,T)
U160	1338-23-4	2-Butanone, peroxide (R,T)
U053	4170-30-3	2-Butenal
U074	764-41-0	2-Butene, 1,4-dichloro- (I,T)
U143	303-34-4	2-Butenoic acid, 2-methyl-, 7-[[2,3-dihydroxy -...2-(1-methoxyethyl)-3-methyl-1-ox-obutoxy]methyl]-...2,3,5,7 a-t etrahydro-1H-pyrrolizin-1-yl ester,...[1S-[1alpha(Z),7(2S*, 3R*),7aalpha]]-
U031	71-36-3	n-Butyl alcohol (I)
U136	75-60-5	Cacodylic acid
U032	13765-19-0	Calcium chromate
U372	10605-21-7	Carbamic acid, 1H-benzimidazol-2-yl, methyl ester.
U271	17804-35-2	Carbamic acid, [1-[(butylamino)carbonyl]-1H-benzimidazol-2-yl]-, methyl ester.
U280	101-27-9	Carbamic acid, (3-chlorophenyl)-, 4-chloro-2-butynyl ester.
U238	51-79-6	Carbamic acid, ethyl ester
U178	615-53-2	Carbamic acid, methylnitroso-, ethyl ester
U373	122-42-9	Carbamic acid, phenyl-, 1-methylethyl ester.
9	23564-05-8	Carbamic acid, [1,2-phenylenebis (imino-

		carbonothioyl)]bis-, dimethyl ester.
U097	79-44-7	Carbamic chloride, dimethyl-
U114	1111-54-6	Carbamodithioic acid, 1,2-ethanediylbis-, ...salts & esters
U062	2303-16-4	Carbamothioic acid, bis(1-methylethyl)-, S-(2, 3-dichloro-2-propenyl) ester
U389	2303-17-5	Carbamothioic acid, bis(1-methylethyl)-, S-(2, 3,3-trichloro-2-propenyl) ester.
U387	52888-80-9	Carbamothioic acid, dipropyl-, S-(phenylmethyl) ester.
U279	63-25-2	Carbaryl.
U372	10605-21-7	Carbendazim.
U367	1563-38-8	Carbofuran phenol.
U215	6533-73-9	Carbonic acid, dithallium(1+) salt
U033	353-50-4	Carbonic difluoride
U156	79-22-1	Carbonochloridic acid, methyl ester (I,T)
U033	353-50-4	Carbon oxyfluoride (R,T)
U211	56-23-5	Carbon tetrachloride
U034	75-87-6	Chloral
U035	305-03-3	Chlorambucil
U036	57-74-9	Chlordane, alpha & gamma isomers
U026	494-03-1	Chlornaphazin
U037	108-90-7	Chlorobenzene
U038	510-15-6	Chlorobenzilate
U039	59-50-7	p-Chloro-m-cresol
U042	110-75-8	2-Chloroethyl vinyl ether
U044	67-66-3	Chloroform
U046	107-30-2	Chloromethyl methyl ether
U047	91-58-7	beta-Chloronaphthalene
U048	95-57-8	o-Chlorophenol
U049	3165-93-3	4-Chloro-o-toluidine, hydrochloride
U032	13765-19-0	Chromic acid H2CrO4 , calcium salt
U050	218-01-9	Chrysene
U051	.....	Creosote
U052	1319-77-3	Cresol (Cresylic acid)
U053	4170-30-3	Crotonaldehyde
U055	98-82-8	Cumene (I)
U246	506-68-3	Cyanogen bromide (CN)Br
U197	106-51-4	2,5-Cyclohexadiene-1,4-dione
U056	110-82-7	Cyclohexane (I)
U129	58-89-9	Cyclohexane, 1,2,3,4,5,6-hexachloro-, ...(1alpha,2alpha,3beta,4alpha, 5alpha,6beta)-
	108-94-1	Cyclohexanone (I)

RCRA Hazardous Waste - U-List

U130	77-47-4	1,3-Cyclopentadiene, 1,2,3,4,5,5-hexachloro-
U058	50-18-0	Cyclophosphamide
U240	194-75-7	2,4-D, salts & esters
U059	20830-81-3	Daunomycin
U060	72-54-8	DDD
U061	50-29-3	DDT
U062	2303-16-4	Diallate
U063	53-70-3	Dibenz[a,h]anthracene
U064	189-55-9	Dibenzo[a,i]pyrene
U066	96-12-8	1,2-Dibromo-3-chloropropane
U069	84-74-2	Dibutyl phthalate
U070	95-50-1	o-Dichlorobenzene
U071	541-73-1	m-Dichlorobenzene
U072	106-46-7	p-Dichlorobenzene
U073	91-94-1	3,3'-Dichlorobenzidine
U074	764-41-0	1,4-Dichloro-2-butene (I,T)
U075	75-71-8	Dichlorodifluoromethane
U078	75-35-4	1,1-Dichloroethylene
U079	156-60-5	1,2-Dichloroethylene
U025	111-44-4	Dichloroethyl ether
U027	108-60-1	Dichloroisopropyl ether
U024	111-91-1	Dichloromethoxy ethane
U081	120-83-2	2,4-Dichlorophenol

Hazardous waste No.	Chemical abstracts No.	Substance
U082	87-65-0	2,6-Dichlorophenol
U084	542-75-6	1,3-Dichloropropene
U085	1464-53-5	1,2:3,4-Diepoxybutane (I,T)
U395	5952-26-1	Diethylene glycol, dicarbamate.
U108	123-91-1	1,4-Diethyleneoxide
U028	117-81-7	Diethylhexyl phthalate
U086	1615-80-1	N,N'-Diethylhydrazine
U087	3288-58-2	O,O-Diethyl S-methyl dithiophosphate
U088	84-66-2	Diethyl phthalate
U089	56-53-1	Diethylstilbesterol
U090	94-58-6	Dihydrosafrole
U091	119-90-4	3,3'-Dimethoxybenzidine
U092	124-40-3	Dimethylamine (I)
U093	60-11-7	p-Dimethylaminoazobenzene
U094	57-97-6	7,12-Dimethylbenz[a]anthracene
U095	119-93-7	3,3'-Dimethylbenzidine
U096	80-15-9	alpha,alpha-Dimethylbenzylhydroperoxide (R)

RCRA Hazardous Waste - U-List

J097	79-44-7	Dimethylcarbamoyl chloride
U098	57-14-7	1,1-Dimethylhydrazine
U099	540-73-8	1,2-Dimethylhydrazine
U101	105-67-9	2,4-Dimethylphenol
U102	131-11-3	Dimethyl phthalate
U103	77-78-1	Dimethyl sulfate
U105	121-14-2	2,4-Dinitrotoluene
U106	606-20-2	2,6-Dinitrotoluene
U107	117-84-0	Di-n-octyl phthalate
U108	123-91-1	1,4-Dioxane
U109	122-66-7	1,2-Diphenylhydrazine
U110	142-84-7	Dipropylamine (I)
U111	621-64-7	Di-n-propylnitrosamine
U041	106-89-8	Epichlorohydrin
U001	75-07-0	Ethanal (I)
U174	55-18-5	Ethanamine, N-ethyl-N-nitroso-
U404	121-44-8	Ethanamine, N,N-diethyl
U155	91-80-5	1,2-Ethanediamine, N,N-dimethyl-N'-2-pyridinyl-N'-(2-thienylmethyl)-
U067	106-93-4	Ethane, 1,2-dibromo-
U076	75-34-3	Ethane, 1,1-dichloro-
U077	107-06-2	Ethane, 1,2-dichloro-
[illegible]31	67-72-1	Ethane, hexachloro-
24	111-91-1	Ethane, 1,1'-[methylenebis(oxy)]bis[2-chloro-
U117	60-29-7	Ethane, 1,1'-oxybis-(I)
U025	111-44-4	Ethane, 1,1'-oxybis[2-chloro-
U184	76-01-7	Ethane, pentachloro-
U208	630-20-6	Ethane, 1,1,1,2-tetrachloro-
U209	79-34-5	Ethane, 1,1,2,2-tetrachloro-
U218	62-55-5	Ethanethioamide
U410	59669-26-0	Ethanimidothioic acid, N,N'-[thi-obis[(methylimino)carbonyloxy]]bis-, dimethyl ester
U394	30558-43-1	Ethanimidothioic acid, 2-(dimethylamino)-N-hydroxy-2-oxo-, methyl ester.
U226	71-55-6	Ethane, 1,1,1-trichloro-
U227	79-00-5	Ethane, 1,1,2-trichloro-
U359	110-80-5	Ethanol, 2-ethoxy-
U173	1116-54-7	Ethanol, 2,2'-(nitrosoimino)bis-
U395	5952-26-1	Ethanol, 2,2'-oxybis-, dicarbamate.
U004	98-86-2	Ethanone, 1-phenyl-
U043	75-01-4	Ethene, chloro-
U[illegible]	110-75-8	Ethene, (2-chloroethoxy)-
U[illegible]	75-35-4	Ethene, 1,1-dichloro-
[illegible]	156-60-5	Ethene, 1,2-dichloro-, (E)-
[illegible]	127-18-4	Ethene, tetrachloro-
U228	79-01-6	Ethene, trichloro-
U112	141-78-6	Ethyl acetate (I)

RCRA Hazardous Waste - U-List

113	140-88-5	Ethyl acrylate (I)
U238	51-79-6	Ethyl carbamate (urethane)
U117	60-29-7	Ethyl ether (I)
U114	1111-54-6	Ethylenebisdithiocarbamic acid, salts & esters
U067	106-93-4	Ethylene dibromide
U077	107-06-2	Ethylene dichloride
U359	110-80-5	Ethylene glycol monoethyl ether
U115	75-21-8	Ethylene oxide (I,T)
U116	96-45-7	Ethylenethiourea
U076	75-34-3	Ethylidene dichloride
U118	97-63-2	Ethyl methacrylate
U119	62-50-0	Ethyl methanesulfonate
U120	206-44-0	Fluoranthene
U122	50-00-0	Formaldehyde
U123	64-18-6	Formic acid (C,T)
U124	110-00-9	Furan (I)
U125	98-01-1	2-Furancarboxaldehyde (I)
U147	108-31-6	2,5-Furandione
U213	109-99-9	Furan, tetrahydro-(I)
U125	98-01-1	Furfural (I)
U124	110-00-9	Furfuran (I)
U206	18883-66-4	Glucopyranose, 2-deoxy-2-(3-methyl-3-nitrosoureido)-, D-
U206	18883-66-4	D-Glucose, 2-deoxy-2-[[(methylnitrosoamino)-...carbonyl]amino]-
U126	765-34-4	Glycidylaldehyde
U163	70-25-7	Guanidine, N-methyl-N'-nitro-N-nitroso-
U127	118-74-1	Hexachlorobenzene
U128	87-68-3	Hexachlorobutadiene
U130	77-47-4	Hexachlorocyclopentadiene
U131	67-72-1	Hexachloroethane
U132	70-30-4	Hexachlorophene
U243	1888-71-7	Hexachloropropene
U133	302-01-2	Hydrazine (R,T)
U086	1615-80-1	Hydrazine, 1,2-diethyl-
U098	57-14-7	Hydrazine, 1,1-dimethyl-
U099	540-73-8	Hydrazine, 1,2-dimethyl-
U109	122-66-7	Hydrazine, 1,2-diphenyl-
U134	7664-39-3	Hydrofluoric acid (C,T)

Hazardous waste No.	Chemical abstracts No.	Substance
U134	7664-39-3	Hydrogen fluoride (C,T)

RCRA Hazardous Waste - U-List

U135	7783-06-4	Hydrogen sulfide
U135	7783-06-4	Hydrogen sulfide H2S
U096	80-15-9	Hydroperoxide, 1-methyl-1-phenylethyl- (R)
U116	96-45-7	2-Imidazolidinethione
U137	193-39-5	Indeno[1,2,3-cd]pyrene
U190	85-44-9	1,3-Isobenzofurandione
U140	78-83-1	Isobutyl alcohol (I,T)
U141	120-58-1	Isosafrole
U142	143-50-0	Kepone
U143	303-34-4	Lasiocarpine
U144	301-04-2	Lead acetate
U146	1335-32-6	Lead, bis(acetato-O)tetrahydroxytri-
U145	7446-27-7	Lead phosphate
U146	1335-32-6	Lead subacetate
U129	58-89-9	Lindane
U163	70-25-7	MNNG
U147	108-31-6	Maleic anhydride
U148	123-33-1	Maleic hydrazide
U149	109-77-3	Malononitrile
U150	148-82-3	Melphalan
U151	7439-97-6	Mercury
U152	126-98-7	Methacrylonitrile (I, T)
U092	124-40-3	Methanamine, N-methyl- (I)
U029	74-83-9	Methane, bromo-
U045	74-87-3	Methane, chloro- (I, T)
U046	107-30-2	Methane, chloromethoxy-
U068	74-95-3	Methane, dibromo-
U080	75-09-2	Methane, dichloro-
U075	75-71-8	Methane, dichlorodifluoro-
U138	74-88-4	Methane, iodo-
U119	62-50-0	Methanesulfonic acid, ethyl ester
U211	56-23-5	Methane, tetrachloro-
U153	74-93-1	Methanethiol (I, T)
U225	75-25-2	Methane, tribromo-
U044	67-66-3	Methane, trichloro-
U121	75-69-4	Methane, trichlorofluoro-
U036	57-74-9	4,7-Methano-1H-indene, 1,2,4,5,6,7,8,8-octachloro-2,3,3a,4,7,7a-hexahydro-
U154	67-56-1	Methanol (I)
U155	91-80-5	Methapyrilene
U142	143-50-0	1,3,4-Metheno-2H-cyclobuta [cd]pentalen-2-one, 1,1a,3,3a,4,5,5,5a,5b,6-decachlorooctahydro-
U247	72-43-5	Methoxychlor
U154	67-56-1	Methyl alcohol (I)
29	74-83-9	Methyl bromide
86	504-60-9	1-Methylbutadiene (I)
45	74-87-3	Methyl chloride (I,T)
U156	79-22-1	Methyl chlorocarbonate (I,T)
226	71-55-6	Methyl chloroform

RCRA Hazardous Waste - U-List

U157	56-49-5	3-Methylcholanthrene
U158	101-14-4	4,4'-Methylenebis(2-chloroaniline)
U068	74-95-3	Methylene bromide
U080	75-09-2	Methylene chloride
U159	78-93-3	Methyl ethyl ketone (MEK) (I,T)
U160	1338-23-4	Methyl ethyl ketone peroxide (R,T)
U138	74-88-4	Methyl iodide
U161	108-10-1	Methyl isobutyl ketone (I)
U162	80-62-6	Methyl methacrylate (I,T)
U161	108-10-1	4-Methyl-2-pentanone (I)
U164	56-04-2	Methylthiouracil
U010	50-07-7	Mitomycin C
U059	20830-81-3	5,12-Naphthacenedione, 8-acetyl-10- [(3-amino-2,3,6-trideoxy)-alpha-L-lyxo-hexopyranosyl)oxy]-7,8,9,10-tetrahydro-6 ,8,11-trihydroxy-1-methoxy-, (8S-cis)-
U167	134-32-7	1-Naphthalenamine
U168	91-59-8	2-Naphthalenamine
U026	494-03-1	Naphthalenamine, N,N'-bis(2-chloroethyl)-
U165	91-20-3	Naphthalene
U047	91-58-7	Naphthalene, 2-chloro-
U166	130-15-4	1,4-Naphthalenedione
U236	72-57-1	2,7-Naphthalenedisulfonic acid, 3,3'- [(3,3'-...dimethyl [1,1'-biphenyl]-4,4'-diyl)bis(azo)bis [5-amino-4-hydroxy]-, tetrasodium salt
U279	63-25-2	1-Naphthalenol, methylcarbamate.
U166	130-15-4	1,4-Naphthoquinone
U167	134-32-7	alpha-Naphthylamine
U168	91-59-8	beta-Naphthylamine
U217	10102-45-1	Nitric acid, thallium(1+) salt
U169	98-95-3	Nitrobenzene (I,T)
U170	100-02-7	p-Nitrophenol
U171	79-46-9	2-Nitropropane (I,T)
U172	924-16-3	N-Nitrosodi-n-butylamine
U173	1116-54-7	N-Nitrosodiethanolamine
U174	55-18-5	N-Nitrosodiethylamine
U176	759-73-9	N-Nitroso-N-ethylurea
U177	684-93-5	N-Nitroso-N-methylurea
U178	615-53-2	N-Nitroso-N-methylurethane
U179	100-75-4	N-Nitrosopiperidine
U180	930-55-2	N-Nitrosopyrrolidine
U181	99-55-8	5-Nitro-o-toluidine
U193	1120-71-4	1,2-Oxathiolane, 2,2-dioxide
U058	50-18-0	2H-1,3,2-Oxazaphosphorin-2-

		amine,...N,N-bis(2-chloroethyl)tetrahydro-, 2-oxide
U115	75-21-8	Oxirane (I,T)
U126	765-34-4	Oxiranecarboxyaldehyde
U041	106-89-8	Oxirane, (chloromethyl)-
U182	123-63-7	Paraldehyde
U183	608-93-5	Pentachlorobenzene
U184	76-01-7	Pentachloroethane
U185	82-68-8	Pentachloronitrobenzene (PCNB)
See F027	87-86-5	Pentachlorophenol

Hazardous waste No.	Chemical abstracts No.	Substance
U161	108-10-1	Pentanol, 4-methyl-
U186	504-60-9	1,3-Pentadiene (I)
U187	62-44-2	Phenacetin
U188	108-95-2	Phenol
U048	95-57-8	Phenol, 2-chloro-
U039	59-50-7	Phenol, 4-chloro-3-methyl-
U081	120-83-2	Phenol, 2,4-dichloro-
U082	87-65-0	Phenol, 2,6-dichloro-
U089	56-53-1	Phenol, 4,4'-(1,2-diethyl-1,2-ethenediyl)bis-, (E)-
U101	105-67-9	Phenol, 2,4-dimethyl-
U052	1319-77-3	Phenol, methyl-
U132	70-30-4	Phenol, 2,2'-methylenebis[3,4,6-trichloro-
U411	114-26-1	Phenol, 2-(1-methylethoxy)-, methylcarbamate.
U170	100-02-7	Phenol, 4-nitro-
See F027	87-86-5	Phenol, pentachloro-
See F027	58-90-2	Phenol, 2,3,4,6-tetrachloro-
See F027	95-95-4	Phenol, 2,4,5-trichloro-
See F027	88-06-2	Phenol, 2,4,6-trichloro-
U150	148-82-3	L-Phenylalanine, 4-[bis(2-chloroethyl)amino]-
U145	7446-27-7	Phosphoric acid, lead(2+) salt (2:3)
U087	3288-58-2	Phosphorodithioic acid, O,O-diethyl S-methyl ester
U189	1314-80-3	Phosphorus sulfide (R)
U190	85-44-9	Phthalic anhydride
U191	109-06-8	2-Picoline
U179	100-75-4	Piperidine, 1-nitroso-
192	23950-58-5	Pronamide
194	107-10-8	1-Propanamine (I,T)

U111	621-64-7	1-Propanamine, N-nitroso-N-propyl-
U110	142-84-7	1-Propanamine, N-propyl- (I)
U066	96-12-8	Propane, 1,2-dibromo-3-chloro-
U083	78-87-5	Propane, 1,2-dichloro-
U149	109-77-3	Propanedinitrile
U171	79-46-9	Propane, 2-nitro- (I,T)
U027	108-60-1	Propane, 2,2'-oxybis[2-chloro-
U193	1120-71-4	1,3-Propane sultone
See F027	93-72-1	Propanoic acid, 2-(2,4,5-trichlorophenoxy)-
U235	126-72-7	1-Propanol, 2,3-dibromo-, phosphate (3:1)
U140	78-83-1	1-Propanol, 2-methyl- (I,T)
U002	67-64-1	2-Propanone (I)
U007	79-06-1	2-Propenamide
U084	542-75-6	1-Propene, 1,3-dichloro-
U243	1888-71-7	1-Propene, 1,1,2,3,3,3-hexachloro-
U009	107-13-1	2-Propenenitrile
U152	126-98-7	2-Propenenitrile, 2-methyl- (I,T)
U008	79-10-7	2-Propenoic acid (I)
U113	140-88-5	2-Propenoic acid, ethyl ester (I)
U118	97-63-2	2-Propenoic acid, 2-methyl-, ethyl ester
U162	80-62-6	2-Propenoic acid, 2-methyl-, methyl ester (I, T)
U373	122-42-9	Propham.
U411	114-26-1	Propoxur.
U194	107-10-8	n-Propylamine (I,T)
U083	78-87-5	Propylene dichloride
U387	52888-80-9	Prosulfocarb.
U148	123-33-1	3,6-Pyridazinedione, 1,2-dihydro-
U196	110-86-1	Pyridine
U191	109-06-8	Pyridine, 2-methyl-
U237	66-75-1	2,4-(1H,3H)-Pyrimidinedione, 5-[bis(2-...chl oroethyl)amino]-
U164	56-04-2	4(1H)-Pyrimidinone, 2,3-dihydro-6-methyl-2-thioxo-
U180	930-55-2	Pyrrolidine, 1-nitroso-
U200	50-55-5	Reserpine
U201	108-46-3	Resorcinol
U202	181-07-2	Saccharin, & salts
U203	94-59-7	Safrole
U204	7783-00-8	Selenious acid
U204	7783-00-8	Selenium dioxide
U205	7488-56-4	Selenium sulfide
U205	7488-56-4	Selenium sulfide SeS2 (R,T)
U015	115-02-6	L-Serine, diazoacetate (ester)
See F027	93-72-1	Silvex (2,4,5-TP)
U206	18883-66-4	Streptozotocin

RCRA Hazardous Waste - U-List

U103	77-78-1	Sulfuric acid, dimethyl ester
U189	1314-80-3	Sulfur phosphide (R)
See F027	93-76-5	2,4,5-T
U207	95-94-3	1,2,4,5-Tetrachlorobenzene
U208	630-20-6	1,1,1,2-Tetrachloroethane
U209	79-34-5	1,1,2,2-Tetrachloroethane
U210	127-18-4	Tetrachloroethylene
See F027	58-90-2	2,3,4,6-Tetrachlorophenol
U213	109-99-9	Tetrahydrofuran (I)
U214	563-68-8	Thallium(I) acetate
U215	6533-73-9	Thallium(I) carbonate
U216	7791-12-0	Thallium(I) chloride
U216	7791-12-0	Thallium chloride Tlcl
U217	10102-45-1	Thallium(I) nitrate
U218	62-55-5	Thioacetamide
U410	59669-26-0	Thiodicarb.
U153	74-93-1	Thiomethanol (I,T)
U244	137-26-8	Thioperoxydicarbonic diamide [(H2 N)C(S)]2S 2, tetra- methyl-
U409	23564-05-8	Thiophanate-methyl.
U219	62-56-6	Thiourea
U244	137-26-8	Thiram
U220	108-88-3	Toluene
U221	25376-45-8	Toluenediamine
U223	26471-62-5	Toluene diisocyanate (R,T)
U328	95-53-4	o-Toluidine
U353	106-49-0	p-Toluidine
U222	636-21-5	o-Toluidine hydrochloride

Hazardous waste No.	Chemical abstracts No.	Substance
U389	2303-17-5	Triallate.
U011	61-82-5	1H-1,2,4-Triazol-3-amine
U227	79-00-5	1,1,2-Trichloroethane
U228	79-01-6	Trichloroethylene
U121	75-69-4	Trichloromonofluoromethane
See F027	95-95-4	2,4,5-Trichlorophenol
See F027	88-06-2	2,4,6-Trichlorophenol
U404	121-44-8	Triethylamine.
U234	99-35-4	1,3,5-Trinitrobenzene (R,T)
U182	123-63-7	1,3,5-Trioxane, 2,4,6-trimethyl-
U235	126-72-7	Tris(2,3-dibromopropyl) phosphate
U236	72-57-1	Trypan blue

U237	66-75-1	Uracil mustard
U176	759-73-9	Urea, N-ethyl-N-nitroso-
U177	684-93-5	Urea, N-methyl-N-nitroso-
U043	75-01-4	Vinyl chloride
U248	181-81-2	Warfarin, & salts, when present at concentrations of 0.3% or less
U239	1330-20-7	Xylene (I)
U200	50-55-5	Yohimban-16-carboxylic acid, 11,17-dimethoxy-18- [(3,4,5-trimethoxybenzoyl)oxy]-, methyl ester, (3beta,16beta,17alpha,18beta,20alpha)-
U249	1314-84-7	Zinc phosphide Zn3P2, when present at concentrations of 10% or less

1 CAS Number given for parent compound only.

[§261.33(f) table revised at 60 FR 7848, Feb. 9, 1995; corrected at 60 FR 19165, April 17, 1995; amended at 62 FR 32977, June 17, 1997; 63 FR 24625, May 4, 1998; 65 FR 14474, March 17, 2000]

*** TEXAS COMMISSION ON ENVIRONMENTAL QUALITY ***
Notice of Registration
Industrial and Hazardous Waste

This registration does not constitute authorization of any waste management activities or facilites listed below. The registration reflects hazardous and/or industrial waste generation and management activities for which the registrant has provided notification. Requirements for solid waste management are provided by Texas Administrative code section 335 of the rules of the Texas Commission on Environmental Quality (TCEQ). Changes or additions to waste management methods referred to in this notice require written notification to the TCEQ.

Solid Waste Registration Number: 30900 EPA Id: TXD008950461

The Solid Waste Registration Number provides access to computerized and filed information pertaining to your operation. Please refer to that number in any correspondence.

Company Name: CES Environmental Services Inc
Site Name: CES Environmental Services
Site Location: 4904 Griggs Rd, Houston, TX
Primary Contact: Thangudu, Prabhakar
Mailing Address: 4904 Griggs Rd
Houston, TX 77021-3208

Region: 12
County: 101 Harris

Initial Registration Date: 02/18/1977
Last Amendment Date: 01/08/2007
Last Date NOR Computer update: 03/09/2007

Title: Vice President
Phone: 713-676-1460
Site Street Address: 4904 Griggs Rd
Houston, TX 77221-3298
Reporting Method: STEERS

Registration Status: Active HW Permit #: 39048 IW Permit #: 39048
Registration Type: Generator Receiver Transporter Transfer Facility
Generator Type: Industrial
Hazardous Waste Generation Status: Large Quantity Generator
Receiver Type: Commercial
Transporter Type: For hire Transport own waste
Transport Wst Class: 1 2 H Used Oil

Business Description: Operation of a nonhazardous industrial solid waste processing and storage facility.

NAICS Code: 562219 Other Nonhazardous Waste Treatment and Disposal
Handler Status: Recycler

Operator Information
Name: CES Environmental Services Inc
Phone: 713-676-1460
Address: 4904 Griggs Rd
Houston, TX, 77021-3208

Owner Information
Name: CES Environmental Services Inc
Phone: 713-676-1460
Address: 4904 Griggs Rd
Houston, TX, 77021-3208

Billing Address: ATTN: Environmental Dept
4904 Griggs Road
Houston, TX 44021-3208

Other Contact: Easton, Sean
Mailing Address: 4904 Griggs Rd
Houston, TX 77021
Role: Owner's Representative Phone:

Other Contact: Thangudu, Prabhakar
Mailing Address: 4904 Griggs Rd
Houston, TX 77021
Role: STEERS Contact Phone: 713-676-1460

As of 01/08/2007 - the next unassigned sequence number for WASTES is 9027 and
the next unassigned sequence number for UNITS is 123.

Section 335, Chapter 31 of the Texas Adminstrative Code specifies the notification, record keeping, manifesting and reporting requirements for hazardous and industrial solid wastes.

30900 CES Environmental Services Inc

**** WASTE INFORMATION ****

Texas Waste Code	Waste Class	Status	Date of Status	Managed Onsite/ Offsite	Radio-active	TCEQ Audit Complete

****** Active Wastes ******

90011191 1 Active 06/18/02 On No

Description from Generator: Non RCRA regulated rinse water. Generating process: Rinsing w/ pressure washer of RCRA Empty containers. Date of generation 6-30-2002
Texas Form Code: 119 Other inorganic liquids
Current Management Units: Tank 101 102
Contain Store Area 107
WWTP 109
* Origin Codes: 1 Onsite-process/service

90025191 1 Active 06/18/02 On No No

Description from Generator: Non RCRA regulated waste sludge. Generating process: Removal of non haz from tanks and totes before destruction. Date of generation: 7-1-2002
Texas Form Code: 519 Other inorganic sludges
Current Management Units: Misc Store Container 103
* Origin Codes: 3 From non-haz waste mgmt

90049992 2 Active 06/18/02 On No Yes

Description from Generator: Plant trash generated from on-site activities. Date of generation: 7-1-02.
Texas Form Code: 999 Plant Refuse
Current Management Units: Misc Store Container 104
* Origin Codes: 1 Onsite-process/service

9005609H H Active 06/18/02 On/Off No No

Description from Generator: Flammable sludge. Generating process: removal of unused products from tank/tote management services. Date of generation: 7-1-02.
Texas Form Code: 609 Other organic sludges
EPA Form Code: W609 Other organic sludge
EPA Hazardous Waste Numbers: D001 F005
Current Management Units: Contain Store Area 105
* Origin Codes: 1 Onsite-process/service
* Source Codes: G09 Other production or service-related processes
* NAICS Code: 236220 Commercial and Institutional Building Construction

28

Please print or type. (Form designed for use on elite (12-pitch) typewriter.)

Form Approved. OMB No. 2050-0039

UNIFORM HAZARDOUS WASTE MANIFEST	1. Generator ID Number	2. Page 1 of	3. Emergency Response Phone	4. Manifest Tracking Number 002166024 JJK

5. Generator's Name and Mailing Address

Generator's Site Address (if different than mailing address)

Generator's Phone:

6. Transporter 1 Company Name — U.S. EPA ID Number

7. Transporter 2 Company Name — U.S. EPA ID Number

8. Designated Facility Name and Site Address — U.S. EPA ID Number

Facility's Phone:

9a. HM	9b. U.S. DOT Description (including Proper Shipping Name, Hazard Class, ID Number, and Packing Group (if any))	10. Containers No.	10. Containers Type	11. Total Quantity	12. Unit Wt./Vol.	13. Waste Codes		
	1.							
	2.							
	3.							
	4.							

14. Special Handling Instructions and Additional Information

15. **GENERATOR'S/OFFEROR'S CERTIFICATION:** I hereby declare that the contents of this consignment are fully and accurately described above by the proper shipping name, and are classified, packaged, marked and labeled/placarded, and are in all respects in proper condition for transport according to applicable international and national governmental regulations. If export shipment and I am the Primary Exporter, I certify that the contents of this consignment conform to the terms of the attached EPA Acknowledgment of Consent.
I certify that the waste minimization statement identified in 40 CFR 262.27(a) (if I am a large quantity generator) or (b) (if I am a small quantity generator) is true.

Generator's/Offeror's Printed/Typed Name — Signature — Month Day Year

16. International Shipments ☐ Import to U.S. ☐ Export from U.S. Port of entry/exit:
Transporter signature (for exports only): Date leaving U.S.:

17. Transporter Acknowledgment of Receipt of Materials

Transporter 1 Printed/Typed Name — Signature — Month Day Year

Transporter 2 Printed/Typed Name — Signature — Month Day Year

18. Discrepancy

18a. Discrepancy Indication Space ☐ Quantity ☐ Type ☐ Residue ☐ Partial Rejection ☐ Full Rejection

Manifest Reference Number:

18b. Alternate Facility (or Generator) — U.S. EPA ID Number

Facility's Phone:

18c. Signature of Alternate Facility (or Generator) — Month Day Year

19. Hazardous Waste Report Management Method Codes (i.e., codes for hazardous waste treatment, disposal, and recycling systems)

1.	2.	3.	4.

20. Designated Facility Owner or Operator: Certification of receipt of hazardous materials covered by the manifest except as noted in Item 18a

Printed/Typed Name — Signature — Month Day Year

GENERATOR — INT'L — TRANSPORTER — DESIGNATED FACILITY

EPA Form 8700-22 (Rev. 3-05) Previous editions are obsolete.

DESIGNATED FACILITY TO DESTINATION STATE (IF REQUIRED)

U.S. EPA Form 8700-22

Read all instructions before completing this form.

1. This form has been designed for use on a 12-pitch (elite) typewriter which is also compatible with standard computer printers; a firm point pen may also be used—press down hard.

ral regulations require generators and transporters of hazardous waste and owners or ators of hazardous waste treatment, storage, and disposal facilities to complete this form A Form 8700-22) and, if necessary, the continuation sheet (EPA Form 8700-22A) for both inter- and intrastate transportation of hazardous waste.

Public reporting burden for this collection of information is estimated to average: 30 minutes for generators, 10 minutes for transporters, and 25 minutes for owners or operators of treatment, storage, and disposal facilities. This includes time for reviewing instructions, gathering data, completing, reviewing and transmitting the form. Any correspondence regarding the PRA burden statement for the manifest must be sent to the Director of the Collection Strategies Division in EPA's Office of Information Collection at the following address: U.S. Environmental Protection Agency (2822T), 1200 Pennsylvania Ave., NW., Washington, DC 20460. Do not send the completed form to this address.

I. Instructions for Generators

Item 1. Generator's U.S. EPA Identification Number

Enter the generator's U.S. EPA twelve digit identification number, or the State generator identification number if the generator site does not have an EPA identification number.

Item 2. Page 1 of ___

Enter the total number of pages used to complete this Manifest (*i.e.*, the first page (EPA Form 8700-22) plus the number of Continuation Sheets (EPA Form 8700-22A), if any).

Item 3. Emergency Response Phone Number

Enter a phone number for which emergency response information can be obtained in the event of an incident during transportation. The emergency response phone number must:

1. Be the number of the generator or the number of an agency or organization who is capable of and accepts responsibility for providing detailed information about the shipment;
2. Reach a phone that is monitored 24 hours a day at all times the waste is in transportation (including transportation related storage); and
3. Reach someone who is either knowledgeable of the hazardous waste being shipped and has comprehensive emergency response and spill cleanup/incident mitigation information for the material being shipped or has immediate access to a person who has that knowledge and information about the shipment.

e: Emergency Response phone number information should only be entered in Item 3 when is one phone number that applies to all the waste materials described in Item 9b. If a ation (e.g., consolidated shipments) arises where more than one Emergency Response phone number applies to the various wastes listed on the manifest, the phone numbers associated with each specific material should be entered after its description in Item 9b.

Item 4. Manifest Tracking Number

This unique tracking number must be pre-printed on the manifest by the forms printer.

Item 5. Generator's Mailing Address, Phone Number and Site Address

Enter the name of the generator, the mailing address to which the completed manifest signed by the designated facility should be mailed, and the generator's telephone number. Note, the telephone number (including area code) should be the normal business number for the generator, or the number where the generator or his authorized agent may be reached to provide instructions in the event the designated and/or alternate (if any) facility rejects some or all of the shipment. Also enter the physical site address from which the shipment originates only if this address is different than the mailing address.

Item 6. Transporter 1 Company Name, and U.S. EPA ID Number

Enter the company name and U.S. EPA ID number of the first transporter who will transport the waste. Vehicle or driver information may not be entered here.

Item 7. Transporter 2 Company Name and U.S. EPA ID Number

If applicable, enter the company name and U.S. EPA ID number of the second transporter who will transport the waste. Vehicle or driver information may not be entered here.

If more than two transporters are needed, use a Continuation Sheet(s) (EPA Form 8700-22A).

Item 8. Designated Facility Name, Site Address, and U.S. EPA ID Number

Enter the company name and site address of the facility designated to receive the waste listed on this manifest. Also enter the facility's phone number and the U.S. EPA twelve digit identification number of the facility.

Item 9. U.S. DOT Description (Including Proper Shipping Name, Hazard Class or Division, Identification Number, and Packing Group)

Item 9a. If the wastes identified in Item 9b consist of both hazardous and nonhazardous materials, then identify the hazardous materials by entering an "X" in this Item next to the rresponding hazardous material identified in Item 9b.

9b. Enter the U.S. DOT Proper Shipping Name, Hazard Class or Division, Identification ıber (UN/NA) and Packing Group for each waste as identified in 49 CFR 172. Include technical name(s) and reportable quantity references, if applicable.

Note: If additional space is needed for waste descriptions, enter these additional descriptions in Item 27 on the Continuation Sheet (EPA Form 8700-22A). Also, if more than one Emergency Response phone number applies to the various wastes described in either Item 9b or Item 27, enter applicable Emergency Response phone numbers immediately following the shipping descriptions for those Items.

Item 10. Containers (Number and Type)

Enter the number of containers for each waste and the appropriate abbreviation from Table I (below) for the type of container.

TABLE I.–TYPES OF CONTAINERS

BA = Burlap, cloth, paper, or plastic bags.	DT = Dump truck.
CF = Fiber or plastic boxes, cartons, cases.	DW = Wooden drums, barrels, kegs.
CM = Metal boxes, cartons, cases (including roll-offs).	HG = Hopper or gondola cars.
CW = Wooden boxes, cartons, cases.	TC = Tank cars.
CY = Cylinders.	TP = Portable tanks.
DF = Fiberboard or plastic drums, barrels, kegs.	TT = Cargo tanks (tank trucks).
DM = Metal drums, barrels, kegs.	

Item 11. Total Quantity

Enter, in designated boxes, the total quantity of waste. Round partial units to the nearest whole unit, and *do not* enter decimals or fractions. To the extent practical, report quantities using appropriate units of measure that will allow you to report quantities with precision. Waste quantities entered should be based on actual measurements or reasonably accurate estimates of actual quantities shipped. Container capacities are not acceptable as estimates.

Item 12. Units of Measure (Weight/Volume)

Enter, in designated boxes, the appropriate abbreviation from Table II (below) for the unit of measure.

TABLE II.–UNITS OF MEASURE

G = Gallons (liquids only).	N = Cubic Meters.
K = Kilograms.	P = Pounds.
L = Liters (liquids only).	T = Tons (2000 Pounds).
M = Metric Tons (1000 kilograms).	Y = Cubic Yards.

Note: Tons, Metric Tons, Cubic Meters, and Cubic Yards should only be reported in connection with very large bulk shipments, such as rail cars, tank trucks, or barges.

Item 13. Waste Codes

Enter up to six federal and state waste codes to describe each waste stream identified in Item 9b. State waste codes that are not redundant with federal codes must be entered here, in addition to the federal waste codes which are most representative of the properties of the waste.

Item 14. Special Handling Instructions and Additional Information

1. Generators may enter any special handling or shipment-specific information necessary for the proper management or tracking of the materials under the generator's or other handler's business processes, such as waste profile numbers, container codes, bar codes, or response guide numbers. Generators also may use this space to enter additional descriptive information about their shipped materials, such as chemical names, constituent percentages, physical state, or specific gravity of wastes identified with volume units in Item 12.
2. This space may be used to record limited types of federally required information for which there is no specific space provided on the manifest, including any alternate facility designations; the manifest tracking number of the original manifest for rejected wastes and residues that are re-shipped under a second manifest; and the specification of PCB waste descriptions and PCB out-of-service dates required under 40 CFR 761.207. Generators, however, cannot be required to enter information in this space to meet state regulatory requirements.

Item 15. Generator's/Offeror's Certifications

1. The generator must read, sign, and date the waste minimization certification statement. In signing the waste minimization certification statement, those generators who have not been exempted by statute or regulation from the duty to make a waste minimization certification under section 3002(b) of RCRA are also certifying that they have complied with the waste minimization requirements. The Generator's Certification also contains the required attestation that the shipment has been properly prepared and is in proper condition for transportation (the shipper's certification). The content of the shipper's certification statement is as follows: "I hereby declare that the contents of this consignment are fully and accurately described above by the proper shipping name, and are classified, packaged, marked and labeled/placarded, and are in all respects in proper condition for transport according to applicable international and national governmental regulations. If export shipment and I am the Primary Exporter, I certify that the contents of this consignment conform to the terms of the attached EPA Acknowledgment of Consent." When a party other than the generator prepares the shipment for transportation, this party may also sign the shipper's certification statement as the offeror of the shipment.
2. Generator or Offeror personnel may preprint the words, "On behalf of" in the signature block or may hand write this statement in the signature block prior to signing the generator/offeror certification, to indicate that the individual signs as the employee or agen of the named principal.

Note: All of the above information except the handwritten signature required in Item 15 may be pre-printed.

II. Instructions for International Shipment Block

Item 16. International Shipments

For export shipments, the primary exporter must check the export box, and enter the point of exit (city and state) from the United States. For import shipments, the importer must check the import box and enter the point of entry (city and state) into the United States. For exports, the transporter must sign and date the manifest to indicate the day the shipment left the United States. Transporters of hazardous waste shipments must deliver a copy of the manifest to the U.S. Customs when exporting the waste across U.S. borders.

III. Instructions for Transporters

Item 17. Transporters' Acknowledgments of Receipt

Enter the name of the person accepting the waste on behalf of the first transporter. That person must acknowledge acceptance of the waste described on the manifest by signing and entering the date of receipt. Only one signature per transportation company is required. Signatures are not required to track the movement of wastes in and out of transfer facilities, unless there is a change of custody between transporters.

If applicable, enter the name of the person accepting the waste on behalf of the second transporter. That person must acknowledge acceptance of the waste described on the manifest by signing and entering the date of receipt.

Note: *Transporters carrying imports, who are acting as importers, may have responsibilities to enter information in the International Shipments Block. Transporters carrying exports may also have responsibilities to enter information in the International Shipments Block. See above instructions for Item 16.*

IV. Instructions for Owners and Operators of Treatment, Storage, and Disposal Facilities

Item 18. Discrepancy

Item 18a. Discrepancy Indication Space

1. The authorized representative of the designated (or alternate) facility's owner or operator must note in this space any discrepancies between the waste described on the Manifest and the waste actually received at the facility. Manifest discrepancies are: significant differences (as defined by §§ 264.72(b) and 265.72(b)) between the quantity or type of hazardous waste designated on the manifest or shipping paper, and the quantity and type of hazardous waste a facility actually receives, rejected wastes, which may be a full or partial shipment of hazardous waste that the TSDF cannot accept, or container residues, which are residues that exceed the quantity limits for "empty" containers set forth in 40 CFR 261.7(b).

2. For rejected loads and residues (40 CFR 264.72(d), (e), and (f), or 40 CFR 265.72(d), (e), or (f)), check the appropriate box if the shipment is a rejected load (*i.e.*, rejected by the designated and/or alternate facility and is sent to an alternate facility or returned to the generator) or a regulated residue that cannot be removed from a container. Enter the reason for the rejection or the inability to remove the residue and a description of the waste. Also, reference the manifest tracking number for any additional manifests being used to track the rejected waste or residue shipment on the original manifest. Indicate the original manifest tracking number in Item 14, the Special Handling Block and Additional Information Block of the additional manifests.

3. Owners or operators of facilities located in unauthorized States (*i.e.*, states in which the U.S. EPA administers the hazardous waste management program) who cannot resolve significant differences in quantity or type within 15 days of receiving the waste must submit to their Regional Administrator a letter with a copy of the Manifest at issue describing the discrepancy and attempts to reconcile it (40 CFR 264.72(c) and 265.72(c)).

4. Owners or operators of facilities located in authorized States (*i.e.*, those States that have received authorization from the U.S. EPA to administer the hazardous waste management program) should contact their State agency for information on where to report discrepancies involving "significant differences" to state officials.

Item 18b. Alternate Facility (or Generator) for Receipt of Full Load Rejections

Enter the name, address, phone number, and EPA Identification Number of the Alternate Facility which the rejecting TSDF has designated, after consulting with the generator, to receive a fully rejected waste shipment. In the event that a fully rejected shipment is being returned to the generator, the rejecting TSDF may enter the generator's site information in this space. This field is not to be used to forward partially rejected loads or residue waste shipments.

Item 18c. Alternate Facility (or Generator) Signature

The authorized representative of the alternate facility (or the generator in the event of a returned shipment) must sign and date this field of the form to acknowledge receipt of the fully rejected wastes or residues identified by the initial TSDF.

Item 19. Hazardous Waste Report Management Method Codes

Enter the most appropriate Hazardous Waste Report Management Method code for each waste listed in Item 9. The Hazardous Waste Report Management Method code is to be entered by the first treatment, storage, or disposal facility (TSDF) that receives the waste and is the code that best describes the way in which the waste is to be managed when received by the TSDF.

Item 20. Designated Facility Owner or Operator Certification of Receipt (Except As Noted in Item 18a)

Enter the name of the person receiving the waste on behalf of the owner or operator of the facility. That person must acknowledge receipt or rejection of the waste described on the Manifest by signing and entering the date of receipt or rejection where indicated. Since the Facility Certification acknowledges receipt of the waste except as noted in the Discrepancy Space in Item 18a, the certification should be signed for both waste receipt and waste rejection, with the rejection being noted and described in the space provided in Item 18a. Fully rejected wastes may be forwarded or returned using Item 18b after consultation with the generator. Enter the name of the person accepting the waste on behalf of the owner or operator of the alternate facility or the original generator. That person must acknowledge receipt or rejection of the waste described on the Manifest by signing and entering the date they received or rejected the waste in Item 18c. Partially rejected wastes and residues must be re-shipped under a new manifest, to be initiated and signed by the rejecting TSDF as offeror of the shipment.

RECYCLED HYDROCARBON + WATER 93

REGULATORY STATUS OF MIXTURES OF WATER AND RECYCLABLE PETROLEUM PRODUCTS

This policy statement addresses the regulatory status of mixtures of water and unused petroleum products, such as gasoline, where the mixture contains recoverable product in a sufficient quantity to be recycled, and the product is recycled as a standard practice. Such mixtures may be generated as a result of routine tank maintenance, due to spills of unused product, through removal of petroleum-contaminated groundwater or surface water, or due to other circumstances.

40 CFR 261.2 (3)

Under the Commission's rules, discarded materials that are recycled by being reclaimed are generally considered solid waste, and such materials are therefore subject to regulation by the Commission. See 30 Tex. Admin. Code § 335.1 (definition of "solid waste"). Pursuant to its rules, however, EPA does not consider certain listed commercial chemical products or off-specification commercial chemical products to be solid wastes when those products are recycled in a manner consistent with their normal use. See 40 C.F.R. § 261.33 (1994); 50 Fed. Reg. 14,219 (1985). By analogy, EPA has also indicated that it does not consider "non-listed" commercial chemical products or off-specification commercial chemical products to be solid wastes, as long as those products are recycled in accordance with their normal use. See 50 Fed. Reg. 14,219 (1985).

In informal guidance, EPA has discussed the application of these principles in the context of mixtures of water and petroleum products. Under certain circumstances, these mixtures may constitute off-specification commercial chemical products that are not subject to RCRA regulation as solid wastes unless discarded. A June 14, 1991 letter opinion from EPA Assistant Administrator Don Clay states that "[t]o the extent that the mixing of product and water is unavoidable and the recovery of the product is a standard practice in the management of the off-specification product, RCRA does not apply."

In order for a petroleum product/water mixture to be exempt from regulation as a solid waste, however, the EPA opinion cautions that the product must be recovered as part of a "legitimate recycling operation." For example, if no product can or will be recovered, the mixture should not be considered an off-specification commercial chemical product. Likewise, if a product/water mixture with a particular level of recoverable product is intentionally generated to avoid regulation of petroleum-contaminated water as a solid waste, then management of the mixture would not generally be considered part of a legitimate recycling operation. Similarly, a product/water mixture should probably be regulated as a solid waste if it is a managed as a waste-like material, e.g. "placed in a surface impoundment or stored in tanks for an extended period of time," rather than as a valuable product.

The EPA opinion further cautions that

> in the event of an enforcement action, any party claiming that a material is not a solid waste must be able to demonstrate that the conditions of the exclusion being claimed are met. For example, in this case, a party may be required to demonstrate that the

-7847

off-specification product can and will actually be recovered. Also, a demonstration that the mixture of product and water was not generated to avoid regulation of the water alone as a hazardous waste may be required.

The Commission's rules specifically provide that respondents to an enforcement action who claim that a material is not a solid waste "must demonstrate that there is a known market or disposition for the material, and that they meet the terms of the exclusion or exemption." See 30 Tex. Admin. Code § 335.1 (subsection (H) of definition of "solid waste").

Based on the available EPA guidance, the Commission is interpreting the definition of "solid waste" in its rules and statutes as not including mixtures of water and unused commercial petroleum products where the mixture contains a recoverable amount of product that will be recovered in a timely manner as part of a legitimate recycling operation. After all recoverable product has been separated from the mixture, the remaining water must be managed in accordance with all applicable federal and state regulations.

95

TNRCC REGULATORY GUIDANCE

Industrial and Hazardous Waste Permits
RG-370
April 2000

SUBJECT: **Managing Paint and Paint-Related Waste Under the Universal Waste Rule**

Introduction

This document contains only brief, general explanations of a few main points in the rules on managing paint and paint-related wastes as Universal Waste; it does not take the place of any laws or regulations.

Terms used. In this guidance document, the pronouns "I," "my," or "you" refer to people or companies covered by the regulations being explained. "We" refers to the Texas Natural Resource Conservation Commission (TNRCC) in general or, in particular, to the Industrial and Hazardous Waste Permits division or its staff. To avoid repeating words, we use the abbreviation PPRW for "paint and paint-related waste"; and UW for Universal Waste. (For other abbreviations see the section at the end of the document.)

The Basics

What is the Universal Waste (UW) Rule?

The UW Rule offers alternatives to the otherwise applicable regulations for managing four types of waste:

- batteries as described in 40 Code of Federal Regulations (CFR) Part 273.2;
- pesticides as described in 40 CFR Part 273.3;
- thermostats as described in 40 CFR Part 273.4, and
- paint and paint-related waste as described in 30 Texas Administrative Code (TAC) Section 335.262 (b).

What is paint and paint-related waste (PPRW) under the UW Rule?

The UW ruled under 30 TAC Section 335.262 says that PPRW is:

- used or unused paint and paint-related material which is "hazardous waste" as defined under Section 335.1(56) (relating to Definitions), and as determined under Section 335.504 (relating to Hazardous Waste Determination); and
- any mixture of pigment and a suitable liquid that forms a closely adherent coating when spread on a surface or any material that results from painting activities.

Why is the UW rule an advantage to me?

- No manifest is required when transporting PPRW.
- No notification to TNRCC is required.
- You do not have to use a registered transporter.
- The waste does not count toward your total hazardous waste generator status.
- The waste is exempt from year-end fees.
- The waste may be accumulated up to one year.

What PPRWs qualify for handling as UW?

- Used or unused paint;
- Spent solvents used in painting (for example, combinations of thinner and paint, lacquer, or varnish);
- Personal Protective Equipment (PPE), contaminated rags, gloves, and debris resulting from painting operations;
- Coating waste paint, overspray, overrun paints, paint filters, paint booth stripping materials, paint sludges from water-wash curtains;
- Cleanup residues from spills of paint (this excludes cleanup residues from a spill of PPRW being managed as UW);
- Cleanup residues from painting and paint-removal activities; and
- Other paint-related wastes generated as a result of the removal of paint.

What kinds of businesses or individuals can use the UW rule?

Any individual or business that generates, accumulates, treats, stores, disposes of, recycles, or otherwise manages the four types of UW (for a list of them, see "What is the UW Rule" on page 1.)

The TNRCC is an equal opportunity/affirmative action employer. The agency does not allow discrimination on the basis of race, color, religion, national origin, sex, disability, age, sexual orientation or veteran status. In compliance with the Americans with Disabilities Act, this document may be requested in alternate formats by contacting the TNRCC at 512/239-0028, Fax 239-0044, or 1-800 RI... or by writing PO Box 13087, Austin, Texas 78711-3087. Authorization for use or reproduction ...

I generate PPRW that could be classified as UW, but I would rather manage it as hazardous waste. May I do that?

Yes. The decision to handle PPRW as hazardous waste or UW is up to the generator.

When was PPRW brought under the UW Rule?

TNRCC published the final rule on October 22, 1999, and made it effective as of October 24, 1999.

Where can I find the UW rule?

- Federal rules are found in 40 CFR Part 273.
- Texas rules are found in 30 TAC Section 335.261 and Section 335.262.

Categories of UW Handlers and Hazardous Waste Generators

What are the categories of UW handlers?

Handlers of UW are categorized as Small-Quantity Handlers and Large-Quantity Handlers.

- **Small-Quantity Handler of UW** means a universal waste handler that *does not* accumulate more than 5,000 kilograms total of universal waste at any time.
- **Large-Quantity Handler of UW** means a universal waste handler that accumulates more than 5,000 kilograms total (calculated collectively) of universal waste at any time.

Are these UW categories different from the ones for hazardous waste generators?

Yes, the UW Handler categories are independent of the categories used to describe hazardous waste generators. Hazardous waste (HW) generators are categorized as:
(1) Large Quantity Generators (LQGs);
(2) Small-Quantity Generators (SQGs); and
(3) Conditionally Exempt Small-Quantity Generators (CESQGs).

How do the UW rules apply to CESQGs ?

A CESQG may choose to manage its PPRW as UW.

Notification and Reporting

Do I have to notify TNRCC about PPRWs I handle as UW?

No. The TNRCC's rules in Section 335.261 (universal waste) do not refer to 30 TAC Section 335.6, which contains general notification requirements for industrial solid waste activities.

Do I use the 8-digit Texas waste code when I handle PPRWs as UW?

No. Once you decide to handle PPRW as UW, the 8-digit Texas waste code is no longer required.

Do I have to notify EPA if I start handling PPRW as UW?

If you are a Large-Quantity Handler of PPRW as UW, and you have previously notified EPA about your hazardous waste management activities, you are not required to renotify EPA. First-time notifiers must submit an 8700-12 notification form to the TNRCC. (This form is available online from TNRCC's Web site. http://www.tnrcc.state.tx.us/forms.html.)

Does PPRW managed as count toward my generator status?

No: 40 CFR Part 261.5 (c)(6) and the May 11, 1995, *Federal Register* (60 FR 25502) both state that UW handlers should not count these wastes toward their monthly quantity determination.

Storing and Transporting UW

How long can a receiving facility accumulate PPRW managed as UW before shipping it to another UW handler?

Each receiving facility can accumulate the waste for an entire year before sending it off to another handler or destination facility. This time limit can be extended if the handler can prove that the extension is necessary to facilitate proper recovery, treatment, or disposal.

What if PPRW generated in Texas is going outside the state for recycling or disposal?

PPRW managed as UW can only be sent off-site to another universal waste handler meeting the standards in 40 CFR Part 273.10-273.40, a destination facility meeting the standards in 40 CFR Part 273.60-273.62, or a foreign destination. So far, Texas is the only state that recognizes PPRW as UW. Therefore, shipments outside Texas would have to comply with the full hazardous waste requirements (for example, rules on transportation, manifests, and interim storage).

What is a destination facility?

It is a facility that treats, disposes of, or recycles a particular category of UW. Destination facilities must comply with all current applicable requirements for hazardous waste management facilities.

Is a manifest required for PPRW managed as UW that goes outside Texas for recycling or disposal?

For portions of the trip through Texas, and any other states where the waste is a UW, you do not need a transporter with an EPA identification number per 40 CFR Part 263.11 (a hazardous waste transporter), and you do not need a manifest. However, for the portion of the trip through states that do not consider the waste to be a UW, a manifest is required, and the waste must be moved by a registered transporter in compliance with 40 CFR Part 263.

Within Texas, do I need to use a registered transporter to haul my PPRW managed as UW?

No, you may use a common carrier for in-state transport of your PPRW managed as UW; however, this waste is not exempt from federal Department of Transportation (DOT) standards in 49 CFR Part 172 that apply to the shipment of hazardous waste.

What are the labeling requirements for storing and shipping of PPRW managed as UW?

The words "UW—Paint and Paint Waste" or "Paint and Paint-Related Waste" must be marked clearly on each container as described in 30 TAC Section 335.262 (F). In addition, this description also must be added to the DOT shipping description in accordance with 49 CFR Part 172.

How do I manage a spill of PPRW handled as UW?

If you are responsible for managing waste from a spill or release,you must determine whether the resulting waste is hazardous according to 40 CFR Part 261. If hazardous, it must be managed in accordance with all applicable requirements found in 40 CFR Parts 260 through 272. If the resulting waste is nonhazardous, then it must be managed in accordance with all applicable state and local requirements.

What regulations cover recycling facilities that receive PPRW managed as UW?

Recycling facilities are excluded from the definition of "UW handlers" (see 40 CFR 273.6). Under those requirements, storage before recycling is regulated (see CFR 261.6(c)(1)).

What regulations apply to a mixture of a solid waste with PPRW managed as UW?

The UW rules apply only to wastes meeting the criteria for being classified as UW. They do not apply to mixtures of UW and a solid waste. Intentional mixing of universal waste with solid waste to avoid classification as a hazardous waste is not allowed. A handler who mixes UW and solid waste to avoid regulation is treating that waste, which would make him or her subject to the regular hazardous waste regulations.

Abbreviations and Terms

CESQG—Conditionally Exempt Small Quantity Generator

CFR—Code of Federal Regulations

DOT U.S. Department of Transportation

PPRW(s)—Paint and Paint-Related Waste(s)

Section refers to a part of Title 30 TAC which contains state environmental rules.

TAC Texas Administrative Code

UW Universal Waste

For More Information, Contact:

Technical Analysis Team
I&HW Permits / MC-130
TNRCC Waste Permits Division
PO Box 13087
Austin TX 78711-3087
Phone No. (512) 239-6412
Fax No. (512) 239-6410

U.S. Department of Transportation
Phone No. (800) 832-5660

EPAPA011000336

PLACARDING NOTES 98

- Are there tanks with diamond labels or placards on the premises?

- What type of package is being shipped? Cylinders and drums are often used for hazardous materials shipments.

- Is a hazard class label, proper shipping name, or identification number on the package?

- Are there any handling precautions?

- **Hazardous Waste Manifest**

When transporting hazardous wastes, you must sign by hand and carry a Uniform Hazardous Waste Manifest. The name and EPA registration number of the shippers, carriers, and destination must appear on the manifest. Shippers must prepare, date, and sign by hand the manifest. Treat the manifest as a shipping paper when transporting the waste. Only give the waste shipment to another registered carrier or disposal/treatment facility. Each carrier transporting the shipment must sign by hand the manifest. After you deliver the shipment, keep your copy of the manifest. Each copy must have all needed signatures and dates, including those of the person to whom you delivered the waste.

- **Placarding**

Attach the appropriate placards to the vehicle before you drive it. You are only allowed to move an improperly placarded vehicle during an emergency, in order to protect life or property.

Placards must appear on both sides and ends of the vehicle. Each placard must be:

- Easily seen from the direction it faces.

- Placed so the words or numbers are level and read from left to right.

- At least three inches away from any other markings.

- Kept clear of attachments or devices such as ladders, doors, and tarpaulins.

- Kept clean and undamaged so that the color, format, and message are easily seen.

To decide which placards to use, you need to know:

- The hazard class of the materials.

- The amount of hazardous materials shipped in your vehicle.

Always make sure that the shipper shows the correct basic description on the shipping paper and verifies that the proper labels are shown on the packages. If you are not familiar with the material, ask the shipper to contact your office.

- **Placard Tables**

There are two placard tables, Table 1 and Table 2. Table 1 materials must be placarded whenever any amount is transported.

PLACARD TABLE 1 - ANY AMOUNT

IF YOUR VEHICLE CONTAINS ANY AMOUNT OF...	PLACARD AS...
1.1	Explosives 1.1
1.2	Explosives 1.2
1.3	Explosives 1.3
2.3	Poison Gas
4.3	Dangerous When Wet
6.1 (PG 1, inhalation hazard only)	Poison
7 (Radioactive Yellow III Label only)	Radioactive

Except for bulk packagings, the hazard classes in Table 2 need placards only if the total amount transported is 1,001 pounds or more including the package. Add the amounts from all shipping papers for all the Table 2 products you have on board. You may use DANGEROUS placards instead of separate placards for each Table 2 hazard class when:

- You have 1,001 pounds or more of two or more Table 2 hazard classes, requiring different placards, and

- You have not loaded 5,000 pounds or more of any Table 2 hazard class material at any one place. You must use the specific placard for this material.

If the words INHALATION HAZARD are on the shipping paper or package, you must display POISON placards in addition to any other placards needed by the product's hazard class.

You need not use EXPLOSIVES 1.5, OXIDIZER, and DANGEROUS placards if a vehicle contains Division 1.1 or 1.2 explosives and is placarded with EXPLOSIVES 1.1 or 1.2 placards. You need not use a Division 2.2 NON-FLAMMABLE GAS placard on a vehicle displaying a Division 2.1 FLAMMABLE GAS or for oxygen a Division 2.2 OXYGEN placard.

Placards used to identify the primary hazard class of a

material must have the hazard class or division number displayed in the lower corner of the placard. No hazard class or division number is allowed on placards used to identify a secondary hazard class of a material.

Placards may be displayed for hazardous materials even if not required so long as the placard identifies the hazard of the material being transported.

PLACARD TABLE 2 -- 1,001 POUNDS OR MORE

Category of Material (Hazard class division number and additional description, as appropriate)	Placard Name
1.4	Explosives 1.4
1.5	Explosives 1.5
1.6	Explosives 1.6
2.1	Flammable Gas
2.2	Non-Flammable Gas
3	Flammable
Combustible Liquid	Combustible*
4.1	Flammable Solid
4.2	Spontaneously Combustible
5.1	Oxidizer
5.2	Organic Peroxide
6.1 (PG I or II, other than PG I inhalation hazard)	Poison
6.1 (PG III)	Keep Away From Food
6.2	(None)
8	Corrosive
9	Class 9**
ORM-D	(None)

* FLAMMABLE placard may be used in place of a COMBUSTIBLE placard on a cargo tank or portable tank.

** Class 9 Placard is not required for domestic transportation.

Test Your Knowledge

1. What is a shipper's certification? Where does it appear? Who signs it? CHECK PACKAGE BILL OF LADING PAPERS
2. When may non-hazardous materials be described by hazard class words or identification numbers? NEVER
3. Name five hazard classes that require placarding in any amount. 1.1 1.2 1.3 2.3 POISON GAS 6.1 INHALATION 7 RADIO
4. A shipment described on the Hazardous Waste Manifest may only be delivered to another ~~fill in the blank~~ carrier or treatment facility, which then signs the fill in ~~the blank~~ giving you a copy which you must keep. HAZ WASTE MANIFEST
5. Your load includes 20 pounds of Division 2.3 gas and 1,001 pounds of flammable gas. What placards do you need, if any? POISON GAS 2.1 FLAMMABLE GAS

These questions may be on your test. If you can't answer them all, re-read pages 9-6 through 9-9.

9.4 LOADING AND UNLOADING

- **General Loading Requirements**

  - Do all you can to protect containers of hazardous materials. Don't use any tools which might damage containers or other packaging during loading. Don't use hooks.

  - Before loading or unloading, set the parking brake. Make sure the vehicle will not move.

  - Many products become more hazardous when exposed to heat. Load hazardous materials away from heat sources.

  - Watch for signs of leaking or damaged containers: LEAKS SPELL TROUBLE! Do not transport leaking packages. Depending on the material, you, your truck, and others could be in danger.

Containers of Class 1 (explosives), Class 3 (flammable liquids), Class 4 (flammable solids), Class 5 (oxidizers), Class 8 (corrosives), Class 2 (gases), and Division 6.1 (poisons) must be braced to prevent movement of the packages during transportation.

No Smoking. When loading or unloading hazardous materials, keep fire away. Don't let people smoke nearby. Never smoke around:

Class 1 (EXPLOSIVES) Division 2.1 (FLAMMABLE GAS) Class 5 (OXIDIZERS)

Class 4 (FLAMMABLE SOLIDS) Class 3 (FLAMMABLE LIQUIDS)

100

Reliable Solutions
524 Morse Ave., Schaumburg, IL 60193
Phone: 847-891-1625 - Fax 847-891-2336
E-mail: info@reliablesolutions.com

DOT Hazardous Material Regulations (49 CFR 100-179)

Purpose: The purpose of the DOT hazardous material regulations (HMR) are to promote the safe transportation of hazardous material through the effective communication of information concerning the hazards of hazardous materials being transported. Through the communication of this information, accidents are either altogether avoided or, emergency responders are properly prepared to respond to a given incident or accident.

Overview

The requirements of HMR

Hazardous Material Classification

Shipping papers **Marking**
Labeling **Placarding**
Packaging **Employee Training**

Hazardous Material Classification

Do any of the following pertain to your product in question?

Hazard Classes listed in descending order of Hazard

Product Hazards	Yes	No
Poisonous by inhalation - Liquid		
Flammable Liquid - PG I (Flash point <73F, BP<=95F)		
Flammable Liquid - PG II (Flash point <73F, BP>95F)		
Flammable Liquid - PG III (Flash point >=73F<=141F, BP>95F)		
Corrosive - PG I (Full destruction of skin after 3 min. exposure, observed 60 min.)		
Corrosive - PG I I(Full destruction of skin after 3 -60 min. exposure, observed after 14 days)		
Corrosive - PG III (Full destruction of skin after >60 min. exposure, observed after 14 days)		
Flammable Solid		
Spontaneously Combustible		
Oxidizer		
Combustible Liquid (Flash point >141 F < 200 F)		

101

Poisonous other than by inhalation	

Are any of the above categories checked Yes? _____ If no, material is not DOT Hazardous.

Are any of the above categories checked Yes? _____ If yes, material is DOT Hazardous.

If more than one Hazard checked yes, hazard precedence table needs to be consulted to determine primary and subsidiary hazards.

Primary hazard: _____

Subsidiary Hazard: _____

Shipping Papers

Shipping papers of DOT Hazardous materials must contain the following:

Proper shipping Name as listed in Hazardous Material Table. If a material is described on the HMT with a "n.o.s." description, the technical name of the hazardous component must be entered in association with the basic description. Hazard Class (not required for combustibles) Identification number (UN or NA) Packing group, in roman numerals Total quantity including the unit of measurement

Shippers Certification:

Each person who offers a hazardous material for transportation shall certify that the material is offered for transportation in accordance with the regulations by including a shippers certification statement on the shipping papers. This statement might read:

"I hereby declare that the contents of this consignment are fully and accurately described above by proper shipping name and are classified, packed, marked, labeled/placarded, and are in all respects in proper condition for transport according to applicable international and national governmental regulations"

Hazardous and Non Hazardous Materials:

When hazardous and non-hazardous materials are described on the same shipping paper, the hazardous material entries must be:

Entered First or Printed in a contrasting color or highlighted or Identified by the entry of an "X" placed before the PSN in a column captioned "HM"

Accessibility of Shipping Papers:

For those of you running your own trucks, the shipping papers must be readily accessible. Specifically they must be within the drivers immediate reach when he is at the wheel. This may be a holder on the door, or on the seat next to the driver. When the driver is not at the wheel, the papers must be in a holder on the drivers door or on the drivers seat. All hazardous shipping papers must appear first or be distinctively tabbed. Trucks must also be equipped with Emergency Response Information. A copy of the North American Emer...

Symbols	Hazardous materials descriptions and proper shipping names	Hazard class or Division	Identification Numbers	PG	Label Codes	Special provisions (§172.102)	(8) Packaging (§173.***) Exceptions	Nonbulk	Bulk	(9) Quantity limitations Passenger aircraft/rail	Cargo aircraft only	(10) Vessel stowage Location	Other	Placard Advisory Consult §172.504 & §172.505 to determine placard *Denotes placard for any quantity
(1)	(2)	(3)	(4)	(5)	(6)	(7)	(8A)	(8B)	(8C)	(9A)	(9B)	(10A)	(10B)	
	Acrylic acid, stabilized	8	UN2218	II	8, 3	B2, IB2, T7, TP2	154	202	243	1 L	30 L	C	25, 40	CORROSIVE
	Acrylonitrile, stabilized	3	UN1093	I	3, 6.1	B9, T14, TP2, TP13	None	201	243	Forbidden	30 L	E	40	FLAMMABLE
	Actuating cartridge, explosive, see **Cartridges, power device**													
	Adhesives, *containing a flammable liquid*	3	UN1133	I	3	B42, T11, TP1, TP8, TP27	150	201	243	1 L	30 L	B		FLAMMABLE
				II	3	149, B52, IB2, T4, TP1, TP8	150	173	242	5 L	60 L	B		FLAMMABLE
				III	3	B1, B52, IB3, T2, TP1	150	173	242	60 L	220 L	A		FLAMMABLE
	Adiponitrile	6.1	UN2205	III	6.1	IB3, T3, TP1	153	203	241	60 L	220 L	A		POISON
	Aerosols, *corrosive, Packing Group II or III, (each not exceeding 1 L capacity)*	2.2	UN1950		2.2, 8	153, A34	306	None	None	75 kg	150 kg	A	48, 87, 126	NONFLAMMABLE GAS
	Aerosols, *flammable, (each not exceeding 1 L capacity)*	2.1	UN1950		2.1	153, N82	306	None	None	75 kg	150 kg	A	48, 87, 126	FLAMMABLE GAS
	Aerosols, flammable, n.o.s. *(engine starting fluid) (each not exceeding 1 L capacity)*	2.1	UN1950		2.1	153, N82	306	304	None	Forbidden	150 kg	A	48, 87, 126	FLAMMABLE GAS
	Aerosols, *non-flammable, (each not exceeding 1 L capacity)*	2.2	UN1950		2.2	153	306, 307	None	None	75 kg	150 kg	A	48, 87, 126	NONFLAMMABLE GAS
	Aerosols, *poison, each not exceeding 1 L capacity*	2.2	UN1950		2.2	153	306	None	None	Forbidden	Forbidden	A	48, 87, 126	NONFLAMMABLE GAS
	Air bag inflators, compressed gas *or* Air bag modules, *compressed gas or* Seat-belt pretensioners, compressed gas	2.2	UN3353		2.2	133	166	166	166	75 kg	150 kg	A		NONFLAMMABLE GAS
I	Air bag inflators, *or* Air bag modules, *or* Seat-belt pretensioners	1.4G	UN0503	II	1.4G	161	None	62	None	Forbidden	75 kg	02		EXPLOSIVES 1.4
	Air bag inflators, *or* Air bag modules, *or* Seat-belt pretensioners	9	UN3268	III	9	160	166	166	166	25 kg	100 kg	A		CLASS 9
	Air, compressed	2.2	UN1002		2.2	78	306	302	302	75 kg	150 kg	A		NONFLAMMABLE GAS
	Air, refrigerated liquid, *(cryogenic liquid)*	2.2	UN1003		2.2, 5.1	T75, TP5, TP22	320	316	318, 319	Forbidden	150 kg	D	51	NONFLAMMABLE GAS
	Air, refrigerated liquid, *(cryogenic liquid) non-pressurized*	2.2	UN1003		2.2, 5.1	T75, TP5, TP22	320	316	318, 319	Forbidden	Forbidden	D	51	NONFLAMMABLE GAS
	Aircraft engines (including turbines), see **Engines, internal combustion**													
	Aircraft evacuation slides, see **Life saving appliances** *etc.*													
	Aircraft hydraulic power unit fuel tank *(containing a mixture of anhydrous hydrazine and monomethyl hydrazine) (M86 fuel)*	3	UN3165	I	3, 6.1, 8		None	172	None	Forbidden	42 L	E		FLAMMABLE
	Aircraft survival kits, see **Life saving appliances** *etc.*													
G	Alcoholates solution, n.o.s., *in alcohol*	3	UN3274	II	3, 8	IB2	None	202	243	1 L	5 L	B		FLAMMABLE
	Alcoholic beverages	3	UN3065	II	3	24, B1, IB2, T4, TP1	150	202	242	5 L	60 L	A		FLAMMABLE
				III	3	24, B1, IB3, N11, T2, TP1	150	203	242	60 L	220 L	A		FLAMMABLE
	Alcohols, *n.o.s*	3	UN1987	I	3	T11, TP1, TP8, TP27	None	201	243	1 L	30 L	E		FLAMMABLE
				II	3	IB2, T7, TP1, TP8, TP28	150	202	242	5 L	60 L	B		FLAMMABLE
				III	3	B1, IB3, T4, TP1, TP29	150	203	242	60 L	220 L	A		FLAMMABLE
G	Alcohols, flammable, toxic, n.o.s.	3	UN1986	I	3, 6.1	T14, TP2, TP13, TP27	None	201	243	Forbidden	30 L	E	40	FLAMMABLE
				II	3, 6.1	IB2, T11, TP2, TP27	None	202	243	1 L	60 L	B	40	FLAMMABLE
				III	3, 6.1	B1, IB3, T7, TP1, TP28	None	203	242	60 L	220 L	A		FLAMMABLE

HAZARDOUS MATERIALS TABLE

REPORTABLE QUANTITY

103

TABLE 1 TO APPENDIX A — HAZARDOUS SUBSTANCES, Continued

Hazardous Substances	Reportable Quantity (RQ) Pounds (Kilograms)
1,2-Benzenedicarboxylic acid, dimethyl ester	5000 (2270)
1,2-Benzenedicarboxylic acid, dioctyl ester	5000 (2270)
1,3-Benzenediol	5000 (2270)
1,2-Benzenediol,4-[1- hydroxy-2-(methylamino) ethyl]-	1000 (454)
Benzeneethanamine, alpha,alpha-dimethyl-	5000 (2270)
Benzeneethanamine, alpha,alpha-dimethyl-	5000 (2270)
Benzenesulfonic acid chloride	100 (45.4)
Benzenesulfonyl chloride	100 (45.4)
Benzenethiol	100 (45.4)
Benzidine	1 (0.454)
1,2-Benzisothiazol-3(2H)-one, 1,1-dioxide	100 (45.4)
Benzo[a]anthracene	10 (4.54)
1,3-Benzodioxole, 5-(2-propenyl)-	100 (45.4)
1,3-Benzodioxole, 5-(1-propenyl)-	100 (45.4)
1,3-Benzodioxole, 5-propyl-	10 (4.54)
Benzo[b]fluoranthene	1 (0.454)
Benzo[k]fluoranthene	5000 (2270)
Benzo[j,k]fluorene	100 (45.4)
Benzoic acid	5000 (2270)
Benzonitrile	5000 (2270)
Benzo[g,h,i]perylene	5000 (2270)
2H-1-Benzopyran-2-one, 4-hydroxy-3-(3-oxo-1-phenyl-butyl) -, & salts, when present at concentrations greater than 0.3%	100 (45.4)
Benzo[a]pyrene	1 (0.454)
3,4-Benzopyrene	1 (0.454)
p-Benzoquinone	10 (4.54)
Benzo[rst]pentaphene	10 (4.54)
Benzotrichloride	10 (4.54)
Benzoyl chloride	1000 (454)
1,2-Benzphenanthrene	100 (45.4)
Benzyl chloride	100 (45.4)
Beryllium ¢	10 (4.54)
Beryllium chloride	1 (0.454)
Beryllium dust ¢	10 (4.54)
Beryllium fluoride	1 (0.454)
Beryllium nitrate	1 (0.454)
alpha - BHC	10 (4.54)
beta - BHC	1 (0.454)
delta - BHC	1 (0.454)
gamma - BHC	1 (0.454)
2,2'-Bioxirane	10 (4.54)
Biphenyl	100 (45.4)
(1,1'-Biphenyl)-4,4' diamine	1 (0.454)
(1,1'-Biphenyl)-4,4' diamine 3,3'dichloro-	1 (0.454)
(1,1'-Biphenyl)-4,4' diamine 3,3'-dimethoxy-	10 (4.54)
(1,1'-Biphenyl)-4,4' diamine 3,3'-dimethyl-	10 (4.54)
Bis(2-chloroethoxy) methane	1000 (454)
Bis(2-chloroethyl) ether	10 (4.54)
Bis(2-ethylhexyl)phthalate	100 (45.4)
Bromoacetone	1000 (454)
Bromoform	100 (45.4)
4-Bromophenyl phenyl ether	100 (45.4)
Brucine	100 (45.4)
1,3-Butadiene	10 (4.54)
1,3-Butadiene, 1,1,2,3,4,4-hexachloro-	1 (0.454)
1-Butanamine, N-butyl-N-nitroso-	10 (4.54)
1-Butanol	5000 (2270)
2-Butanone	5000 (2270)
2-Butanone, 3,3-dimethyl-1-(methylthio)-,O-[(methylamino)carbonyl] oxime	100 (45.4)
2-Butenal	100 (45.4)
2-Butene, 1,4-dichloro-	1 (0.454)
2-Butenoic acid, 2-methyl-,7[[2,3-dihydroxy-2-(1-methoxyethyl)-3-methyl-1-oxobutoxy] methyl]-2,3,5,7a-tetrahydro-1H-pyrrolizin-1-ylester,[1S-[1alpha (Z),7(2S*,3R*),7aalpha]]-	10 (4.54)
Butyl acetate	5000 (2270)
iso- Butyl acetate	.....
sec- Butyl acetate	.....
tert- Butyl acetate	.....
n-Butyl alcohol	5000 (2270)
Butylamine	1000 (454)
iso- Butylamine	.....
sec- Butylamine	.....
tert- Butylamine	.....
Butyl benzyl phthalate	100 (45.4)
n-Butyl phthalate	10 (4.54)
Butyric acid	5000 (2270)
iso-Butyric acid	
Cacodylic acid	1 (0.454)
Cadmium ¢	10 (4.54)
Cadmium acetate	10 (4.54)
Cadmium bromide	10 (4.54)
Cadmium chloride	10 (4.54)
Calcium arsenate	1 (0.454)
Calcium arsenite	1 (0.454)
Calcium carbide	10 (4.54)
Calcium chromate	10 (4.54)
Calcium cyanamide	1000 (454)
Calcium cyanide	10 (4.54)
Calcium cyanide Ca(CN)2	10 (4.54)
Calcium dodecylbenzene sulfonate	1000 (454)
Calcium hypochlorite	10 (4.54)
Camphene, octachloro-	1 (0.454)
Captan	10 (4.54)
Carbamic acid, ethyl ester	100 (45.4)
Carbamic acid, methylnitroso-, ethyl ester	1 (0.454)
Carbamic chloride, dimethyl-	1 (0.454)
Carbamide, thio-	10 (4.54)
Carbamimidoselenoic acid	1000 (454)
Carbamothioic acid, bis (1-methylethyl)-, S-(2,3-dichloro-2-) ester	100 (45.4)
Carbaryl	100 (45.4)
Carbofuran	10 (4.54)
Carbon bisulfide	100 (45.4)
Carbon disulfide	100 (45.4)
Carbonic acid, dithallium (I+)	100 (45.4)
Carbonic dichloride	10 (4.54)
Carbonic difluoride	1000 (454)
Carbonochloridic acid, methyl ester	1000 (454)
Carbonyl sulfide	100 (45.4)
Carbon oxyfluoride	1000 (454)
Carbon tetrachloride	10 (4.54)
Catechol	100 (45.4)
Chloral	5000 (2270)
Chloramben	100 (45.4)
Chlorambucil	10 (4.54)
Chlordane	1 (0.454)
Chlordane, alpha & gamma isomers	1 (0.454)
Chlordane, technical	1 (0.454)
Chlorine	10 (4.54)
Chlornaphazine	100 (45.4)

HAZARDOUS SUBSTANCES RQ