REDACTED VERSION

From: Stratton, Kimberly [KASTRATTON@eprod.com]
Sent: Friday, May 25, 2012 11:24 AM
To: Clonts, Michael; Don Smith (smith.donaldp@epa.gov)
Cc: Fields, Jon; Wheaton, Rachel
Subject: Enterprise Product Operating LLC, East Storage/Splitter III FRP Part 2 or 2
Attachments: East Storage FRP 5-24-12(2).pdf

I have split the revised FRP into to emails in the hopes that it will get through our filters. Please let me know if you do not receive them.

Kim Stratton
Senior Field Environmental Scientist
281-470-4939
832-262-9947 (cell)
kastratton@eprod.com

This message (including any attachments) is confidential and intended for a specific individual and purpose. If you are not the intended recipient, please notify the sender immediately and delete this message.

9534109

APPENDIX IX

SPILL MANAGEMENT TEAM

This appendix contains the following:

☒ Chart describing the Spill Management Team, qualifications, and related duties.

❑ Other: _____

❑ Other: _____

Date of Manual Entries into this Appendix	***Comments and/or Content***

❑ If excess material from this Appendix is kept in a file instead of behind this tab, please complete the following:

Name of file: _____
Storage location: _____
Dates covered: _____
Contents: _____

SPILL MANAGEMENT TEAM

PERSONNEL	REGULAR FUNCTION	SPILL TEAM FUNCTION	SOURCE
Facility Operators	Operators / PIC	First Response & Spill Response Operations (as needed) • stopping spill out the source of it is safe to do so. • Notifying the QI and assisting with response • make ready of facility resources • coordination with the site-wide ERT	On site
Various volunteer personnel from within the complex, which form the ERT	Operators from a variety of co-located facilities	First Response & Spill Response Operations • spill mitigation • firefighting • logistical support	On site within the host facility
Zac Futerfas	Manager East/West Storage	Command & Control (Qualified Individual) • first notification of FOSC / SOSC • engage / contract OSRO(s) • delegation of response tasks • response coordination & direction from facility command center • on-site OSRO(s) supervision authority • environmental resource damage assessment	On site
Dale Conn	Operations Superintendent	Command & Control (Alternate Qualified Individual) • Same as QI if QI is not present. • Support to QI as needed with response coordination, if QI is present.	On site
Kimberly Stratton	Senior Field Environmental Scientist	Safety & Regulatory Oversight • Interpret and apply knowledge of state and federal regulations governing spill response, under QI's direction. • Free QI / AQI from some regulatory agency liaison duties, so that they may concentrate more fully on spill response. • Report agency concerns and objectives to QI • Obtain regulatory clearance for intended spill response strategies • Fish & Wildlife Sensitive Areas planning and liaison. • Waste / recycling brokering	On site
Heath Robertson	Safety Supervisor	• Interpret and apply regulatory knowledge gathering safety requirements • Provide/ensure safety requirements, compliance work on-site safety requirements	On site
Mark Gregory	Houston Region Plant Operations Director	Field Logistics - support as needed • procurement • equipment servicing and repairs • coordination of basic logistics, such as acquisition of PPE, response personnel messing and sanitary facilities	On site

PERSONNEL	REGULAR FUNCTION	SPILL TEAM FUNCTION	SOURCE
Tim Jones	Director of Storage Terminals & Pipelines	Communications • assist with media & community relations in the event of a large spill (draft statements for QI approval, etc)	Houston corporate offices
Mark Gregory	Houston Region Plant Operations Director	Finance • Approve spending contracts • Accounting and financial record-keeping pertaining to spill response	Houston corporate offices
Responds contractor (OSRO)	Spill Response Contractors	Spill Response Operations: Direct field deployment with equipment to contain, control and recover spilled oil: • open water recovery • shoreline protection • shoreline recovery • storage/transport of recovered materials	contracted

APPENDIX X

BLANK FORMS

HARD-COPY USERS: Remove and file, FAX, photocopy, or distribute as necessary. ORIGINALS are in plastic sleeves so the "last clean copy" will not be used by accident! Users should note that these specific forms are not mandatory -- other internal formats may be used instead, depending on management preference, as long as any alternate forms capture the information required by regulation.

This appendix contains the following:

General FRP Compliance:	**PREP:**
☒ Spill response notification form	☒ QI Notification Drill Log
☐ Emergency contact record	☒ SMT Tabletop Exercise Log
☒ Personnel Response Training Log	☒ Equipment Deployment Log
☒ Record of Plan Review as a Portion of Training	☐ PREP Additional Information Log
☒ Plan Review and Update	**Other:**
☒ Response Equipment Inspection Log	❑ _____
	❑ _____

Date of Manual Entries into this Appendix	***Comments and/or Content***

❑ If excess material from this Appendix is kept in a file instead of behind this tab, please complete the following:

Name of file: _____
Storage location: _____
Dates covered: _____
Contents: _____

SPILL RESPONSE NOTIFICATION FORM – page 1 of 2

FAX or Verbally Report this Form as needed. ***CIRCLE*** *and* ***FILL IN*** *where appropriate*

Reporters Last Name **First Name, Middle Initial**	
Position	
Phone Numbers **Day** **Evening**	 281-385-0510 281-797-0795
Facility **Organization Type** **Address** **City, State, Zip**	Enterprise Products Operating LLC East Storage/Splitter III Facility 316 S. Main Street Mont Belvieu, TX 77590
Were Materials Discharged? **Confidential?** **Meeting Federal Obligations to Report?** **Date Called** **Calling for Responsible Party?** **Time Called**	Y / N Y / N Y / N _____ Y / N _____
Date of Incident **Time of Incident (am / pm)** **Incident Description** **Source and/or Cause of Incident**	_____ _____ _____ _____
Incident Address/Location, Latitude, Longitude ***CHECK ONE*** **Container Type** **Tank Oil Storage Capacity (bbls / gallons)** **Nearest City** **State, County** **Distance from City (miles)** **Direction from City** **Section, Township, Range, Borough**	☐ General Facility: 29 degrees, 50 minutes, 17.31 seconds N; 94 degrees 53 minutes, 27.58 seconds W ☐ Other: _____ ☐ Fixed above-ground storage tank ☐ Other: _____ Mont Belvieu Texas

It is not necessary to gather all information represented on this form prior to making initial reports to agencies.

Report information that is known, and follow up later.

SPILL RESPONSE NOTIFICATION FORM - page 2 of 2

FAX or Verbally Report this Form as needed. CIRCLE and FILL IN where appropriate

Material Discharged - total **Chris Code** **Discharged Quantity** **Material Discharged that reached water** **Quantity**	gallons / bbls. _____ _____ _____ _____
Actions taken to control, correct, or mitigate incident **Impact**	_____ _____ _____
Number of Injuries **Number of Deaths**	_____
Were there evacuations? **Number evacuated**	Y / N
Was there any damage? **Damage estimated in dollars**	Y / N
Medium Affected **Description** **More info about Medium**	_____ _____
Any other relevant information	_____ _____ _____ _____
Emergency Response Notification Checklist: • USCG, MSO Houston -- Galveston • EPA Region six • Texas GLO (La Porte)	_____ _____ _____

INTERNAL RECORD OF EMERGENCY CONTACTS MADE

Notifier's Name _____

Date _____

Facility Name East Storage/Splitter III Facility

Owner Name Enterprise Products Operating LLC

Facility ID # FRP-06-TX-00625

PROVIDE INFO ON NOTIFICATION FORM (FOLLOWING PAGE) TO NRC AND AS REQUESTED BY OTHER AGENCIES - other useful contacts listed in Section (b)

Organization	**Required? ***	**Number**	**Contacted (date/time)**
Security	Yes	281-385-0215 or 0217	
NRC	Yes	1-800-424-8802	
FOSC -Coast Guard	No**	**713-671-5100**	
FOSC - EPA	No**	214-655-2222	
SOSC -General Land Office	Yes	1-800-832-8224	
Texas Parks and Wildlife	Maybe	512-389-8014	
Local Fire Dept	Maybe	911	
Southeast Regional LEPC (SERLEPC)	Maybe	713-473-7646 http://www.serlepc.org/LEPC%20Home.htm	
Local Radio Station	No	281-214-0440 (KTRH 740 AM)	
Local TV Station	No	713-669-1313 (KTRK-TV 13)	
Medical Services	No	Triumph Hospital, Baytown (281) 420-7800	

Provision of contact information for private organizations is not intended as an endorsement.
** State and Federal spill reporting hotlines must be contacted at the spill enters the water, or threaten center the water.** These agencies will be contacted by the NRC, but direct courtesy calls are recommended anyway.*

Qualified Individual Notification Drill Log
(PREP Format)

1. Date: _____

2. Exercise or Actual Response? _____

3. Terminal: _____

4. Qualified Individual Notified: _____

5. Time Initiated: _____

Time at which QI Responded: _____

6. Method used to contact:

_____ **Telephone**
_____ **Pager**
_____ **Radio**
_____ **Other**

7. Description of Notification Procedure:

_____

_____

8. Identify which of the 15 core components of your response plan were exercised:

_____

_____

_____

_____

_____

_____

Certification Signature: _____

Retain this form for a minimum of three (3) years (USCG) or five (5) years (EPA).

Spill Management Team (SMT) Tabletop Drill Log
PREP Format, Page 1 of 2

1. Date(s): _____

2. Exercise or actual response? _____
If an exercise, announced or unannounced? _____

3. Location of Tabletop:_____

4. Time Started: _____
Time Completed: _____

5. Response Plan Scenario used (check one):
_____ Average Most Probable discharge
_____ Maximum Most Probable discharge
_____ Worst Case Discharge
Size of simulated spill (bbls.) _____

6. Describe how the following objectives were exercised:
(a) Spill management team's knowledge of oil spill response plan:

_____

_____

_____

_____

(b) Proper Notifications

_____

_____

_____

_____

(c) Communications System

_____

SMT Tabletop Exercise (Page 2 of 2)

(d) SMT's ability to access contracted oil spill response organizations

_____

_____

_____

(e) SMT's ability to coordinate response with On-Scene Coordinator, State, and Applicable Agencies

_____

_____

_____

(f) SMT's ability to access sensitive site and resource information in the Area Contingency Plan

_____

_____

7. Identify which of the 15 core components of your response plan were exercised:

_____

_____

_____

8. Attach a description of lesson(s) learned and person(s) to be responsible for follow up or corrective measures.

Certification Signature: _____

Retain this form for a minimum of three (3) years (USCG) or five (5) years (EPA).

Equipment Deployment Log
PREP Format, page 1 of 2

1. Date(s) Performed: _____

2. Exercise or actual response? _____
If an exercise, announced or unannounced? _____

3. Deployment location(s): _____

_____

_____

4. Time Started: _____
Time Completed: _____

5. Equipment deployed was:
_____ **Facility-owned**
_____ **OSRO Owned (OSRO Name _____)**
_____ **Both**

6. List type and amount of all equipment (e.g., boom and skimmers) deployed and number of support personnel utilized:

_____

_____

7. Describe goals of the equipment deployment and list Area Contingency Plan strategies tested (Attach a sketch of equipment deployments and booming strategies)

_____

_____

_____

8. For deployment of facility-owned equipment, was the amount of equipment deployed at least the amount necessary to respond to your facility's average most probable discharge?

_____

9. For deployment of OSRO-owned equipment, was a representative sample (at least 1000 feet of each boom type and at least one of each skimmer type) deployed?

_____

**** Page 2 ****

10. Are all facility personnel that are responsible for response operations involved in a comprehensive training program, and all pollution response equipment involved in a comprehensive maintenance program?

_____

11. Was the equipment deployed by the personnel responsible for its deployment in the event of an actual spill?

_____

_____

_____

12. Was all deployed equipment operational? If not, why not?

_____

_____

13. Identify which of the 15 core components of your response plan were exercised during this particular exercise:

_____

_____

_____

14. Attach a description of lesson(s) learned and person(s) responsible for follow up of corrective measures.

_____

_____

_____

Certification Signature
Retain this form and other documentation for a minimum of five (5) years (EPA).

PREP LOG – ADDITIONAL DESCRIPTION PAGE
(attach this page if needed)

Date of Drill: _____

Type of Drill: _____

Additional information on this drill:

_____

_____

_____

_____

_____

_____

_____

_____

_____

_____

Response Equipment Inspection Log

Facility: _____

This inspection to be conducted _____

Inspector	Date	Comments

Personnel Response Training Log

Facility: _____

Name	Signature	Response Training Date and Number of Hours	Prevention Training Date and Number of Hours

Secondary Containment Checklist
(EPA Form)

Facility: _____

Date of Inspection	Inspector's Name	Condition of Retaining Wall (standing water, debris, stressed vegetation, spilled material, valve conditions)

Discharge Prevention Meeting Log
(EPA Form)

Date _____

Facility: _____

Attendee's _____

_____

Subject/Issue Identified	Required Action	Implementation Date

RECORD OF PLAN REVIEW AS A PORTION OF TRAINING

By completing the following section, an employee certifies that they have reviewed this Plan during the course of regular facility training/refresher training, and that they are familiar with its contents. This includes, but is not limited to, familiarity with:

- facility emergency response procedures
- the employee's general responsibilities in the event of a spill
- the structure of the facility *Spill Response Team*
- the contractors that the facility may engage in the event of a spill
- Historical Incidents and Sensitive Environments Appendices

This sheet to be maintained by the QI.

PRINT NAME	SIGNATURE	TITLE	DATE OF REVIEW

RECORD OF OPA 90 PLAN REVIEW

Date of Review		
Reviewer		
Reason For Review (Check one)	_____ Post-Spill Review _____ Routine Annual Review	
Areas Identified as Needing Update or Revision:		
Actions Assigned:	**Item:**	**Person Responsible for Completion:**
Summary of Actions Taken:		

APPENDIX XI

COMPLETED FORMS

This appendix contains the following:

☒ Copies of completed forms pertaining to this facility, unless location is specified as otherwise in section below.

❑ Other: _____

❑ Other: _____

Date of Manual Entries into this Appendix	***Comments and/or Content***

❑ If excess material from this Appendix is kept in a file instead of behind this tab, please complete the following:

Name of file: _____
Storage location: _____
Dates covered: _____
Contents: _____

APPENDIX XII

AGENCY CORRESPONDENCE

This appendix contains the following:

- ❑ Copies of correspondence between the facility and regulators.
- ❑ Other: _____
- ❑ Other: _____

Date of Manual Entries into this Appendix	***Comments and/or Content***

- ❑ If excess material from this Appendix is kept in a file instead of behind this tab, please complete the following:

Name of file: _____
Storage location: _____
Dates covered: _____
Contents: _____

APPENDIX XIII

TRAINING RECORDS

This appendix contains the following:

☒ The description of training required by these regulations.
☒ Sign-in sheets or other records documenting training that was given.
❑ Other: _____
❑ Other: _____

Date of Manual Entries into this Appendix	***Comments and/or Content***

❑ If excess material from this Appendix is kept in a file instead of behind this tab, please complete the following:

Name of file: _____
Storage location: _____
Dates covered: _____
Contents: _____

OPA '90 Training: **Terminal Operators (First Responders) training will cover -**

- ❑ The Captain of the Port (COTP) Zones or Environmental Protection Agency (EPA) Regions in which the vessel will operate or facility is located.
- ❑ Notification procedures and requirements for facility owners or operators; internal response organizations; federal and state agencies; and contracted oil spill response organizations (OSROs) and the information required for those organizations.
- ❑ Communication system used for the notifications.
- ❑ Information on the products stored, used, or transferred, including familiarity with material safety data sheets, special handling procedures, health and safety hazards, spill and fire fighting procedures.
- ❑ Facility personnel responsibilities and procedures for use of facility equipment which may be available to mitigate or prevent an oil discharge.
- ❑ Specific procedures to shut down affected operations.
- ❑ Procedures to follow in the event of discharge, potential discharge, or emergency involving the following equipment or scenarios:
    - Tank overfill;
    - Tank rupture;
    - Piping or pipeline rupture;
    - Piping or pipeline leak, both under pressure and not under pressure, if applicable;
    - Explosion of fire;
    - Equipment failure; and
    - Failure of secondary containment system.
- ❑ The operational capabilities of the contracted OSROs to respond to the --
    - Average most probable discharge (small discharge);
    - Maximum most probable discharge (medium discharge);
    - Worst case discharge.
- ❑ Name of the qualified individual and how to contact him or her.
- ❑ General responsibilities and authorities of the qualified individual as described in the facility response plan and facility response organization.
- ❑ The organizational structure that will be used to manage the response actions, including --
    - Command and control;
    - Public information;
    - Safety;
    - Liaison with government agencies;
    - Spill response operations;
    - Planning;
    - Logistics support; and
    - Finance.
- ❑ The drill and exercise program to meet the federal requirements.
- ❑ The Area Contingency Plan for the area in which the facility is located.
- ❑ The National Contingency Plan.
- ❑ Roles and responsibilities of federal and state agencies in pollution response.
- ❑ OSHA requirements for worker health and safety (29 CFR 1910.120).

OPA '90 Training: **QI/AQI training with annual refreshers will cover the following elements:**

- ❑ Procedures the facility personnel may use to mitigate or prevent any discharge or a substantial threat of a discharge of oil resulting from shipboard or facility operational activities associated with internal or external cargo transfers, storage, or use.
- ❑ Facility personnel responsibilities and procedures for use of facility equipment which may be carried to mitigate an oil discharge.
- ❑ Operational capabilities of the contracted OSROs to respond to the following:
    - Average most probable discharge (small discharge);
    - Maximum most probable discharge (medium discharge); and
    - Worst case discharge.
- ❑ Responsibilities and authorities of the qualified individual as described in the facility response plan and facility response organization.
- ❑ The organizational structure that will be used to manage the response actions, including --
    - Command and control;
    - Public information;
    - Safety;
    - Liaison with government agencies;
    - Spill response operations;
    - Planning;
    - Logistics support; and
    - Finance.
- ❑ The responsibilities and duties of each oil spill management team member within the organizational structure.
- ❑ The drill and exercise program to meet federal and state regulations as required under OPA.
- ❑ The role of the qualified individual in the post discharge review of the plan to evaluate and validate its effectiveness.
- ❑ Area Contingency Plans (ACPs) for the areas in which the vessel operates or the facility is located.
- ❑ The National Contingency Plan (NCP).
- ❑ Roles and responsibilities of federal and state agencies in pollution response.
- ❑ Available response resources identified in response plan.
- ❑ Contracting and ordering procedures to acquire oil spill removal organization resources identified in the response plan.
- ❑ Occupational Safety and Health Administration (OSHA) requirements for worker health and safety (29 CFR 1910.120).
- ❑ Incident Command System/Unified Command System.
- ❑ Public affairs.
- ❑ Crisis management.
- ❑ Procedures for obtaining approval for dispersant use or in-situ burning of the spill.
- ❑ Oil spill trajectory analyses.
- ❑ Sensitive biological areas

OPA '90 Training: **Spill Management Team members**: **training will cover** -

- ❑ Captain of the Port (COTP) Zones or Environmental Protection Agency (EPA) Regions in which the vessel will operate or facility is located.
- ❑ Notification procedures and requirements for vessel or facility owners or operators; internal response organizations; federal and state agencies; and contracted oil spill removal organizations (OSROs) and the information required for those organizations.
- ❑ Communication system used for the notifications.
- ❑ Information on the cargoes transferred, stored, or used by the facility, including familiarity with material safety data sheets, special handling procedures, health and safety hazards, spill and fire fighting procedures.
- ❑ Facility personnel responsibilities and procedures for use of shipboard or facility equipment which may be carried to mitigate an oil discharge.
- ❑ Operational capabilities of the contracted OSROs to respond to the following:
    - Average most probable discharge (small discharge);
    - Maximum most probable discharge (medium discharge); and
    - Worst case discharge.
- ❑ Responsibilities and authorities of the qualified individual as described in the vessels or facility response plan and facility response organization.
- ❑ Procedures, if applicable, for transferring responsibility for direction of response activities from vessel personnel to the shore-based spill management team.
- ❑ The organizational structure that will be used to manage the response actions, including --
    - Command and control;
    - Public information;
    - Safety;
    - Liaison with government agencies;
    - Spill response operations;
    - Planning;
    - Logistics support; and
    - Finance.
- ❑ The responsibilities and duties of each oil spill management team member within the organizational structure, in accordance with designated job responsibilities.
- ❑ The training procedures as described in the response plan for members of the spill management team.
- ❑ The drill and exercise program to meet the federal and state regulations as required by OPA.
- ❑ Procedures for the post discharge review of the plan to evaluate and validate its effectiveness.
- ❑ The Area Contingency Plans (ACPs) for the areas in which the vessel operates or the facility is located.
- ❑ The National Contingency Plan (NCP).
- ❑ Roles and responsibilities of federal and state agencies in pollution response.
- ❑ Available response resources.
- ❑ Contracting and ordering procedures to acquire OSRO resources in accordance with designated job responsibilities.
- ❑ Basic information on spill operations and oil spill clean-up technology including --
    - Oil containment;
    - Oil recovery methods and devices;
    - Equipment limitations and uses;

- Shoreline clean-up and protection;
- Spill trajectory analysis;
- Use of dispersants in-situ burning, bioremediation; and
- Waste storage and disposal considerations.

- ❑ Hazard recognition and evaluation.
- ❑ Site safety and security procedures.
- ❑ OSHA requirements for worker health and safety (29 CFR 1910.120).
- ❑ Incident Command System and Unified Command System.
- ❑ Ship salvage procedures, vessel damage stability and hull stress considerations when performing shipboard mitigation procedures, as applicable to designated job responsibilities.
- ❑ Emergency cargo transfer procedures, as applicable to designated job responsibilities.
- ❑ Procedures for both the internal and ship-to-ship transfers of cargo in an emergency, as applicable to designated job responsibilities.
- ❑ Procedures and arrangements of reemergence towing, including the rigging and operation of any emergency towing equipment aboard the vessel, as applicable to designated job responsibilities.
- ❑ Sensitive biological area, as applicable to designated job responsibilities.
- ❑ Procedures for directing the deployment and use of spill response equipment, as applicable to designated job responsibilities.

APPENDIX XIV

APPLICABLE REGULATIONS

This appendix contains the following:

☒ 40 CFR 112.20 and 112.21
☒ Applicable sections of 33 CFR 154.
❑ Other: _____
❑ Other: _____

Date of Manual Entries into this Appendix	***Comments and/or Content***

❑ If excess material from this Appendix is kept in a file instead of behind this tab, please complete the following:

Name of file: _____
Storage location: _____
Dates covered: _____
Contents: _____

Electronic Code of Federal Regulations
e-CFR™

e-CFR Data is current as of February 7, 2012

Title 40: Protection of Environment

PART 112—OIL POLLUTION PREVENTION
Subpart D—Response Requirements

Browse Next

§ 112.20 Facility response plans.

(a) The owner or operator of any non-transportation-related onshore facility that, because of its location, could reasonably be expected to cause substantial harm to the environment by discharging oil into or on the navigable waters or adjoining shorelines shall prepare and submit a facility response plan to the Regional Administrator, according to the following provisions:

(1) For the owner or operator of a facility in operation on or before February 18, 1993 who is required to prepare and submit a response plan under 33 U.S.C. 1321(j)(5), the Oil Pollution Act of 1990 (Pub. L. 101–380, 33 U.S.C. 2701 *et seq.*) requires the submission of a response plan that satisfies the requirements of 33 U.S.C. 1321(j)(5) no later than February 18, 1993.

(i) The owner or operator of an existing facility that was in operation on or before February 18, 1993 who submitted a response plan by February 18, 1993 shall revise the response plan to satisfy the requirements of this section and resubmit the response plan or updated portions of the response plan to the Regional Administrator by February 18, 1995.

(ii) The owner or operator of an existing facility in operation on or before February 18, 1993 who failed to submit a response plan by February 18, 1993 shall prepare and submit a response plan that satisfies the requirements of this section to the Regional Administrator before August 30, 1994.

(2) The owner or operator of a facility in operation on or after August 30, 1994 that satisfies the criteria in paragraph (f)(1) of this section or that is notified by the Regional Administrator pursuant to paragraph (b) of this section shall prepare and submit a facility response plan that satisfies the requirements of this section to the Regional Administrator.

(i) For a facility that commenced operations after February 18, 1993 but prior to August 30, 1994, and is required to prepare and submit a response plan based on the criteria in paragraph (f)(1) of this section, the owner or operator shall submit the response plan or updated portions of the response plan, along with a completed version of the response plan cover sheet contained in appendix F to this part, to the Regional Administrator prior to August 30, 1994.

(ii) For a newly constructed facility that commences operation after August 30, 1994, and is required to prepare and submit a response plan based on the criteria in paragraph (f)(1) of this section, the owner or operator shall submit the response plan, along with a completed version of the response plan cover sheet contained in appendix F to this part, to the Regional Administrator prior to the start of operations (adjustments to the response plan to reflect changes that occur at the facility during the start-up phase of operations must be submitted to the Regional Administrator after an operational trial period of 60 days).

(iii) For a facility required to prepare and submit a response plan after August 30, 1994, as a result of a planned change in design, construction, operation, or maintenance that renders the facility subject to the criteria in paragraph (f)(1) of this section, the owner or operator shall submit the response plan, along with a completed version of the response plan cover sheet contained in appendix F to this part, to the Regional Administrator before the portion of the facility undergoing change commences operations (adjustments to the response plan to reflect changes that occur at the facility during the start-up phase of operations must be submitted to the Regional Administrator after an operational trial period of 60 days).

(iv) For a facility required to prepare and submit a response plan after August 30, 1994, as a result of an unplanned event or change in facility characteristics that renders the facility subject to the criteria in paragraph (f)(1) of this section, the owner or operator shall submit the response plan, along with a completed version of the response plan cover sheet contained in appendix F to this part, to the Regional Administrator within six months of the unplanned event or change.

(3) In the event the owner or operator of a facility that is required to prepare and submit a response plan uses an alternative formula that is comparable to one contained in appendix C to this part to evaluate the criterion in paragraph (f)(1)(ii)(B) or (f)(1)(ii)(C) of this section, the owner or operator shall attach documentation to the response plan cover sheet contained in appendix F to this part that demonstrates the reliability and analytical soundness of the alternative formula.

(4) *Preparation and submission of response plans — Animal fat and vegetable oil facilities.* The owner or operator of any non-transportation-related facility that handles, stores, or transports animal fats and vegetable oils must prepare and submit a facility response plan as follows:

(i) *Facilities with approved plans.* The owner or operator of a facility with a facility response plan that has been approved under paragraph (c) of this section by July 31, 2000 need not prepare or submit a revised plan except as otherwise required by paragraphs (b), (c), or (d) of this section.

(ii) *Facilities with plans that have been submitted to the Regional Administrator.* Except for facilities with approved plans as provided in paragraph (a)(4)(i) of this section, the owner or operator of a facility that has submitted a response plan to the Regional Administrator prior to July 31, 2000 must review the plan to determine if it meets or exceeds the applicable provisions of this part. An owner or operator need not prepare or submit a new plan if the existing plan meets or exceeds the applicable provisions of this part. If the plan does not meet or exceed the applicable provisions of this part, the owner or operator must prepare and submit a new plan by September 28, 2000.

(iii) *Newly regulated facilities.* The owner or operator of a newly constructed facility that commences operation after July 31, 2000 must prepare and submit a plan to the Regional Administrator in accordance with paragraph (a)(2)(ii) of this section. The plan must meet or exceed the applicable provisions of this part. The owner or operator of an existing facility that must prepare and submit a plan after July 31, 2000 as a result of a planned or unplanned change in facility characteristics that causes the facility to become regulated under paragraph (f)(1) of this section, must prepare and submit a plan to the Regional Administrator in accordance with paragraph (a)(2)(iii) or (iv) of this section, as appropriate. The plan must meet or exceed the applicable provisions of this part.

(iv) *Facilities amending existing plans.* The owner or operator of a facility submitting an amended plan in accordance with paragraph (d) of this section after July 31, 2000, including plans that had been previously approved, must also review the plan to determine if it meets or exceeds the applicable provisions of this part. If the plan does not meet or exceed the applicable provisions of this part, the owner or operator must revise and resubmit revised portions of an amended plan to the Regional Administrator in accordance with paragraph (d) of this section, as appropriate. The plan must meet or exceed the applicable provisions of this part.

(b)(1) The Regional Administrator may at any time require the owner or operator of any non-transportation-related onshore facility to prepare and submit a facility response plan under this section after considering the factors in paragraph (f)(2) of this section. If such a determination is made, the Regional Administrator shall notify the facility owner or operator in writing and shall provide a basis for the determination. If the Regional Administrator notifies the owner or operator in writing of the requirement to prepare and submit a response plan under this section, the owner or operator of the facility shall submit the response plan to the Regional Administrator within six months of receipt of such written notification.

(2) The Regional Administrator shall review plans submitted by such facilities to determine whether the facility could, because of its location, reasonably be expected to cause significant and substantial harm to the environment by discharging oil into or on the navigable waters or adjoining shorelines.

(c) The Regional Administrator shall determine whether a facility could, because of its location, reasonably be expected to cause significant and substantial harm to the environment by discharging oil into or on the navigable waters or adjoining shorelines, based on the factors in paragraph (f)(3) of this section. If such a determination is made, the Regional Administrator shall notify the owner or operator of the facility in writing and:

(1) Promptly review the facility response plan;

(2) Require amendments to any response plan that does not meet the requirements of this section;

(3) Approve any response plan that meets the requirements of this section; and

(4) Review each response plan periodically thereafter on a schedule established by the Regional Administrator provided that the period between plan reviews does not exceed five years.

(d)(1) The owner or operator of a facility for which a response plan is required under this part shall revise and resubmit revised portions of the response plan within 60 days of each facility change that materially may affect the response to a worst case discharge, including:

(i) A change in the facility's configuration that materially alters the information included in the response plan;

(ii) A change in the type of oil handled, stored, or transferred that materially alters the required response resources;

(iii) A material change in capabilities of the oil spill removal organization(s) that provide equipment and personnel to respond to discharges of oil described in paragraph (h)(5) of this section;

(iv) A material change in the facility's spill prevention and response equipment or emergency response procedures; and

(v) Any other changes that materially affect the implementation of the response plan.

(2) Except as provided in paragraph (d)(1) of this section, amendments to personnel and telephone number lists included in the response plan and a change in the oil spill removal organization(s) that does not result in a material change in support capabilities do not require approval by the Regional Administrator. Facility owners or operators shall provide a copy of such changes to the Regional Administrator as the revisions occur.

(3) The owner or operator of a facility that submits changes to a response plan as provided in paragraph (d)(1) or (d)(2) of this section shall provide the EPA-issued facility identification number (where one has been assigned) with the changes.

(4) The Regional Administrator shall review for approval changes to a response plan submitted pursuant to paragraph (d)(1) of this section for a facility determined pursuant to paragraph (f)(3) of this section to have the potential to cause significant and substantial harm to the environment.

(e) If the owner or operator of a facility determines pursuant to paragraph (a)(2) of this section that the facility could not, because of its location, reasonably be expected to cause substantial harm to the environment by discharging oil into or on the navigable waters or adjoining shorelines, the owner or operator shall complete and maintain at the facility the certification form contained in appendix C to this part and, in the event an alternative formula that is comparable to one contained in appendix C to this part is used to evaluate the criterion in paragraph (f)(1)(ii)(B) or (f)(1)(ii)(C) of this section, the owner or operator shall attach documentation to the certification form that demonstrates the reliability and analytical soundness of the comparable formula and shall notify the Regional Administrator in writing that an alternative formula was used.

(f)(1) A facility could, because of its location, reasonably be expected to cause substantial harm to the environment by discharging oil into or on the navigable waters or adjoining shorelines pursuant to paragraph (a)(2) of this section, if it meets any of the following criteria applied in accordance with the flowchart contained in attachment C-I to appendix C to this part:

(i) The facility transfers oil over water to or from vessels and has a total oil storage capacity greater than or equal to 42,000 gallons; or

(ii) The facility's total oil storage capacity is greater than or equal to 1 million gallons, and one of the following is true:

(A) The facility does not have secondary containment for each aboveground storage area sufficiently large to contain the capacity of the largest aboveground oil storage tank within each storage area plus sufficient freeboard to allow for precipitation;

(B) The facility is located at a distance (as calculated using the appropriate formula in appendix C to this part or a comparable formula) such that a discharge from the facility could cause injury to fish and wildlife and sensitive environments. For further description of fish and wildlife and sensitive environments, see Appendices I, II, and III of the “Guidance for Facility and Vessel Response Plans: Fish and Wildlife and Sensitive Environments” (see appendix E to this part, section 13, for availability) and the applicable Area Contingency Plan prepared pursuant to section 311(j)(4) of the Clean Water Act;

(C) The facility is located at a distance (as calculated using the appropriate formula in appendix C to this part or a comparable formula) such that a discharge from the facility would shut down a public drinking water intake; or

(D) The facility has had a reportable oil discharge in an amount greater than or equal to 10,000 gallons within the last 5 years.

(2)(i) To determine whether a facility could, because of its location, reasonably be expected to cause substantial harm to the environment by discharging oil into or on the navigable waters or adjoining shorelines pursuant to paragraph (b) of this section, the Regional Administrator shall consider the following:

(A) Type of transfer operation;

(B) Oil storage capacity;

(C) Lack of secondary containment;

(D) Proximity to fish and wildlife and sensitive environments and other areas determined by the Regional Administrator to possess ecological value;

(E) Proximity to drinking water intakes;

(F) Spill history; and

(G) Other site-specific characteristics and environmental factors that the Regional Administrator determines to be relevant to protecting the environment from harm by discharges of oil into or on navigable waters or adjoining shorelines.

(ii) Any person, including a member of the public or any representative from a Federal, State, or local agency who believes that a facility subject to this section could, because of its location, reasonably be expected to cause substantial harm to the environment by discharging oil into or on the navigable waters or adjoining shorelines may petition the Regional Administrator to determine whether the facility meets the criteria in paragraph (f)(2)(i) of this section. Such petition shall include a discussion of how the factors in paragraph (f)(2)(i) of this section apply to the facility in question. The RA shall consider such petitions and respond in an appropriate amount of time.

(3) To determine whether a facility could, because of its location, reasonably be expected to cause significant and substantial harm to the environment by discharging oil into or on the navigable waters or adjoining shorelines, the Regional Administrator may consider the factors in paragraph (f)(2) of this section as well as the following:

(i) Frequency of past discharges;

(ii) Proximity to navigable waters;

(iii) Age of oil storage tanks; and

(iv) Other facility-specific and Region-specific information, including local impacts on public health.

(g)(1) All facility response plans shall be consistent with the requirements of the National Oil and Hazardous Substance Pollution Contingency Plan (40 CFR part 300) and applicable Area Contingency Plans prepared pursuant to section 311(j)(4) of the Clean Water Act. The facility response plan should be coordinated with the local emergency response plan developed by the local emergency planning committee under section 303 of Title III of the Superfund Amendments and Reauthorization Act of 1986 (42 U.S.C. 11001 et seq.). Upon request, the owner or operator should provide a copy of the facility response plan to the local emergency planning committee or State emergency response commission.

(2) The owner or operator shall review relevant portions of the National Oil and Hazardous Substances Pollution Contingency Plan and applicable Area Contingency Plan annually and, if necessary, revise the facility response plan to ensure consistency with these plans.

(3) The owner or operator shall review and update the facility response plan periodically to reflect changes at the facility.

(h) A response plan shall follow the format of the model facility-specific response plan included in

appendix F to this part, unless you have prepared an equivalent response plan acceptable to the Regional Administrator to meet State or other Federal requirements. A response plan that does not follow the specified format in appendix F to this part shall have an emergency response action plan as specified in paragraphs (h)(1) of this section and be supplemented with a cross-reference section to identify the location of the elements listed in paragraphs (h)(2) through (h)(10) of this section. To meet the requirements of this part, a response plan shall address the following elements, as further described in appendix F to this part:

(1) *Emergency response action plan.* The response plan shall include an emergency response action plan in the format specified in paragraphs (h)(1)(i) through (viii) of this section that is maintained in the front of the response plan, or as a separate document accompanying the response plan, and that includes the following information:

(i) The identity and telephone number of a qualified individual having full authority, including contracting authority, to implement removal actions;

(ii) The identity of individuals or organizations to be contacted in the event of a discharge so that immediate communications between the qualified individual identified in paragraph (h)(1) of this section and the appropriate Federal officials and the persons providing response personnel and equipment can be ensured;

(iii) A description of information to pass to response personnel in the event of a reportable discharge;

(iv) A description of the facility's response equipment and its location;

(v) A description of response personnel capabilities, including the duties of persons at the facility during a response action and their response times and qualifications;

(vi) Plans for evacuation of the facility and a reference to community evacuation plans, as appropriate;

(vii) A description of immediate measures to secure the source of the discharge, and to provide adequate containment and drainage of discharged oil; and

(viii) A diagram of the facility.

(2) *Facility information.* The response plan shall identify and discuss the location and type of the facility, the identity and tenure of the present owner and operator, and the identity of the qualified individual identified in paragraph (h)(1) of this section.

(3) *Information about emergency response.* The response plan shall include:

(i) The identity of private personnel and equipment necessary to remove to the maximum extent practicable a worst case discharge and other discharges of oil described in paragraph (h)(5) of this section, and to mitigate or prevent a substantial threat of a worst case discharge (To identify response resources to meet the facility response plan requirements of this section, owners or operators shall follow appendix E to this part or, where not appropriate, shall clearly demonstrate in the response plan why use of appendix E of this part is not appropriate at the facility and make comparable arrangements for response resources);

(ii) Evidence of contracts or other approved means for ensuring the availability of such personnel and equipment;

(iii) The identity and the telephone number of individuals or organizations to be contacted in the event of a discharge so that immediate communications between the qualified individual identified in paragraph (h)(1) of this section and the appropriate Federal official and the persons providing response personnel and equipment can be ensured;

(iv) A description of information to pass to response personnel in the event of a reportable discharge;

(v) A description of response personnel capabilities, including the duties of persons at the facility during a response action and their response times and qualifications;

(vi) A description of the facility's response equipment, the location of the equipment, and equipment testing;

(vii) Plans for evacuation of the facility and a reference to community evacuation plans, as appropriate;

(viii) A diagram of evacuation routes; and

(ix) A description of the duties of the qualified individual identified in paragraph (h)(1) of this section, that include:

(A) Activate internal alarms and hazard communication systems to notify all facility personnel;

(B) Notify all response personnel, as needed;

(C) Identify the character, exact source, amount, and extent of the release, as well as the other items needed for notification;

(D) Notify and provide necessary information to the appropriate Federal, State, and local authorities with designated response roles, including the National Response Center, State Emergency Response Commission, and Local Emergency Planning Committee;

(E) Assess the interaction of the discharged substance with water and/or other substances stored at the facility and notify response personnel at the scene of that assessment;

(F) Assess the possible hazards to human health and the environment due to the release. This assessment must consider both the direct and indirect effects of the release (i.e., the effects of any toxic, irritating, or asphyxiating gases that may be generated, or the effects of any hazardous surface water runoffs from water or chemical agents used to control fire and heat-induced explosion);

(G) Assess and implement prompt removal actions to contain and remove the substance released;

(H) Coordinate rescue and response actions as previously arranged with all response personnel;

(I) Use authority to immediately access company funding to initiate cleanup activities; and

(J) Direct cleanup activities until properly relieved of this responsibility.

(4) *Hazard evaluation.* The response plan shall discuss the facility's known or reasonably identifiable history of discharges reportable under 40 CFR part 110 for the entire life of the facility and shall identify areas within the facility where discharges could occur and what the potential effects of the discharges would be on the affected environment. To assess the range of areas potentially affected, owners or operators shall, where appropriate, consider the distance calculated in paragraph (f)(1)(ii) of this section to determine whether a facility could, because of its location, reasonably be expected to cause substantial harm to the environment by discharging oil into or on the navigable waters or adjoining shorelines.

(5) *Response planning levels.* The response plan shall include discussion of specific planning scenarios for:

(i) A worst case discharge, as calculated using the appropriate worksheet in appendix D to this part. In cases where the Regional Administrator determines that the worst case discharge volume calculated by the facility is not appropriate, the Regional Administrator may specify the worst case discharge amount to be used for response planning at the facility. For complexes, the worst case planning quantity shall be the larger of the amounts calculated for each component of the facility;

(ii) A discharge of 2,100 gallons or less, provided that this amount is less than the worst case discharge amount. For complexes, this planning quantity shall be the larger of the amounts calculated for each component of the facility; and

(iii) A discharge greater than 2,100 gallons and less than or equal to 36,000 gallons or 10 percent of the capacity of the largest tank at the facility, whichever is less, provided that this amount is less than the worst case discharge amount. For complexes, this planning quantity shall be the larger of the amounts calculated for each component of the facility.

(6) *Discharge detection systems.* The response plan shall describe the procedures and equipment used to detect discharges.

(7) *Plan implementation.* The response plan shall describe:

(i) Response actions to be carried out by facility personnel or contracted personnel under the response plan to ensure the safety of the facility and to mitigate or prevent discharges described in paragraph (h)

(5) of this section or the substantial threat of such discharges;

(ii) A description of the equipment to be used for each scenario;

(iii) Plans to dispose of contaminated cleanup materials; and

(iv) Measures to provide adequate containment and drainage of discharged oil.

(8) *Self-inspection, drills/exercises, and response training.* The response plan shall include:

(i) A checklist and record of inspections for tanks, secondary containment, and response equipment;

(ii) A description of the drill/exercise program to be carried out under the response plan as described in §112.21;

(iii) A description of the training program to be carried out under the response plan as described in §112.21; and

(iv) Logs of discharge prevention meetings, training sessions, and drills/exercises. These logs may be maintained as an annex to the response plan.

(9) *Diagrams.* The response plan shall include site plan and drainage plan diagrams.

(10) *Security systems.* The response plan shall include a description of facility security systems.

(11) *Response plan cover sheet.* The response plan shall include a completed response plan cover sheet provided in section 2.0 of appendix F to this part.

(i)(1) In the event the owner or operator of a facility does not agree with the Regional Administrator's determination that the facility could, because of its location, reasonably be expected to cause substantial harm or significant and substantial harm to the environment by discharging oil into or on the navigable waters or adjoining shorelines, or that amendments to the facility response plan are necessary prior to approval, such as changes to the worst case discharge planning volume, the owner or operator may submit a request for reconsideration to the Regional Administrator and provide additional information and data in writing to support the request. The request and accompanying information must be submitted to the Regional Administrator within 60 days of receipt of notice of the Regional Administrator's original decision. The Regional Administrator shall consider the request and render a decision as rapidly as practicable.

(2) In the event the owner or operator of a facility believes a change in the facility's classification status is warranted because of an unplanned event or change in the facility's characteristics (i.e., substantial harm or significant and substantial harm), the owner or operator may submit a request for reconsideration to the Regional Administrator and provide additional information and data in writing to support the request. The Regional Administrator shall consider the request and render a decision as rapidly as practicable.

(3) After a request for reconsideration under paragraph (i)(1) or (i)(2) of this section has been denied by the Regional Administrator, an owner or operator may appeal a determination made by the Regional Administrator. The appeal shall be made to the EPA Administrator and shall be made in writing within 60 days of receipt of the decision from the Regional Administrator that the request for reconsideration was denied. A complete copy of the appeal must be sent to the Regional Administrator at the time the appeal is made. The appeal shall contain a clear and concise statement of the issues and points of fact in the case. It also may contain additional information from the owner or operator, or from any other person. The EPA Administrator may request additional information from the owner or operator, or from any other person. The EPA Administrator shall render a decision as rapidly as practicable and shall notify the owner or operator of the decision.

[59 FR 34098, July 1, 1994, as amended at 65 FR 40798, June 30, 2000; 66 FR 34560, June 29, 2001; 67 FR 47151, July 17, 2002]

Browse Next

For questions or comments regarding e-CFR editorial content, features, or design, email ecfr@nara.gov.

For questions concerning e-CFR programming and delivery issues, email webteam@gpo.gov.

Section 508 / Access bility

Electronic Code of Federal Regulations
e-CFR™

e-CFR Data is current as of February 7, 2012

Title 40: Protection of Environment

PART 112—OIL POLLUTION PREVENTION
Subpart D—Response Requirements

Browse Previous

§ 112.21 Facility response training and drills/exercises.

(a) The owner or operator of any facility required to prepare a facility response plan under §112.20 shall develop and implement a facility response training program and a drill/exercise program that satisfy the requirements of this section. The owner or operator shall describe the programs in the response plan as provided in §112.20(h)(8).

(b) The facility owner or operator shall develop a facility response training program to train those personnel involved in oil spill response activities. It is recommended that the training program be based on the USCG's Training Elements for Oil Spill Response, as applicable to facility operations. An alternative program can also be acceptable subject to approval by the Regional Administrator.

(1) The owner or operator shall be responsible for the proper instruction of facility personnel in the procedures to respond to discharges of oil and in applicable oil spill response laws, rules, and regulations.

(2) Training shall be functional in nature according to job tasks for both supervisory and non-supervisory operational personnel.

(3) Trainers shall develop specific lesson plans on subject areas relevant to facility personnel involved in oil spill response and cleanup.

(c) The facility owner or operator shall develop a program of facility response drills/exercises, including evaluation procedures. A program that follows the National Preparedness for Response Exercise Program (PREP) (see appendix E to this part, section 13, for availability) will be deemed satisfactory for purposes of this section. An alternative program can also be acceptable subject to approval by the Regional Administrator.

[59 FR 34101, July 1, 1994, as amended at 65 FR 40798, June 30, 2000]

Browse Previous

For questions or comments regarding e-CFR editorial content, features, or design, email ecfr@nara.gov.

For questions concerning e-CFR programming and delivery issues, email webteam@gpo.gov.

Section 508 / Access bility

Electronic Code of Federal Regulations e-CFR™

e-CFR Data is current as of February 7, 2012

Title 33: Navigation and Navigable Waters

Browse Previous | Browse Next

PART 154—FACILITIES TRANSFERRING OIL OR HAZARDOUS MATERIAL IN BULK

Section Contents

Subpart A—General

§ 154.100 Applicability.
§ 154.105 Definitions.
§ 154.106 Incorporation by reference: Where can I get a copy of the publications incorporated by reference in this part?
§ 154.107 Alternatives.
§ 154.108 Exemptions.
§ 154.110 Letter of intent.
§ 154.120 Facility examinations.

Subpart B—Operations Manual

§ 154.300 Operations manual: General.
§ 154.310 Operations manual: Contents.
§ 154.320 Operations manual: Amendment.
§ 154.325 Operations manual: Procedures for examination.

Subpart C—Equipment Requirements

§ 154.500 Hose assemblies.
§ 154.510 Loading arms.
§ 154.520 Closure devices.
§ 154.525 Monitoring devices.
§ 154.530 Small discharge containment.
§ 154.540 Discharge removal.
§ 154.545 Discharge containment equipment.
§ 154.550 Emergency shutdown.
§ 154.560 Communications.
§ 154.570 Lighting.

Subpart D—Facility Operations

§ 154.700 General.
§ 154.710 Persons in charge: Designation and qualification.
§ 154.730 Persons in charge: Evidence of designation.
§ 154.735 Safety requirements.
§ 154.740 Records.
§ 154.750 Compliance with operations manual.

Subpart E—Vapor Control Systems

§ 154.800 Applicability.
§ 154.802 Definitions.

§ 154.804 Review, certification, and initial inspection.
§ 154.806 Application for acceptance as a certifying entity.
§ 154.808 Vapor control system, general.
§ 154.810 Vapor line connections.
§ 154.812 Facility requirements for vessel liquid overfill protection.
§ 154.814 Facility requirements for vessel vapor overpressure and vacuum protection.
§ 154.820 Fire, explosion, and detonation protection.
§ 154.822 Detonation arresters, flame arresters, and flame screens.
§ 154.824 Inerting, enriching, and diluting systems.
§ 154.826 Vapor compressors and blowers.
§ 154.828 Vapor recovery and vapor destruction units.
§ 154.840 Personnel training.
§ 154.850 Operational requirements.

Subpart F—Response Plans for Oil Facilities

§ 154.1010 Purpose.
§ 154.1015 Applicability.
§ 154.1016 Facility classification by COTP.
§ 154.1017 Response plan submission requirements.
§ 154.1020 Definitions.
§ 154.1025 Operating restrictions and interim operating authorization.
§ 154.1026 Qualified individual and alternate qualified individual.
§ 154.1028 Methods of ensuring the availability of response resources by contract or other approved means.
§ 154.1029 Worst case discharge.
§ 154.1030 General response plan contents.
§ 154.1035 Specific requirements for facilities that could reasonably be expected to cause significant and substantial harm to the environment.
§ 154.1040 Specific requirements for facilities that could reasonably be expected to cause substantial harm to the environment.
§ 154.1041 Specific response information to be maintained on mobile MTR facilities.
§ 154.1045 Response plan development and evaluation criteria for facilities that handle, store, or transport Group I through Group IV petroleum oils.
§ 154.1047 Response plan development and evaluation criteria for facilities that handle, store, or transport Group V petroleum oils.
§ 154.1050 Training.
§ 154.1055 Exercises.
§ 154.1057 Inspection and maintenance of response resources.
§ 154.1060 Submission and approval procedures.
§ 154.1065 Plan review and revision procedures.
§ 154.1070 Deficiencies.
§ 154.1075 Appeal process.

Subpart G—Additional Response Plan Requirements for a Trans-Alaska Pipeline Authorization Act (TAPAA) Facility Operating in Prince William Sound, Alaska

§ 154.1110 Purpose and applicability.
§ 154.1115 Definitions.
§ 154.1120 Operating restrictions and interim operating authorization.
§ 154.1125 Additional response plan requirements.
§ 154.1130 Requirements for prepositioned response equipment.
§ 154.1135 Response plan development and evaluation criteria.
§ 154.1140 TAPAA facility contracting with a vessel.

Subpart H—Response Plans for Animal Fats and Vegetable Oils Facilities

§ 154.1210 Purpose and applicability.
§ 154.1216 Facility classification.
§ 154.1220 Response plan submission requirements.
§ 154.1225 Specific response plan development and evaluation criteria and other requirements for fixed facilities that handle, store, or transport animal fats or vegetable oils.
§ 154.1228 Methods of ensuring the availability of response resources by contract or other approved means.
§ 154.1240 Specific requirements for animal fats and vegetable oils facilities that could reasonably be expected to cause substantial harm to the environment.

Subpart I—Response Plans for Other Non-Petroleum Oil Facilities

§ 154.1310 Purpose and applicability.
§ 154.1320 Response plan submission requirements.
§ 154.1325 Response plan development and evaluation criteria for facilities that handle, store, or transport other non-petroleum oils.
Appendix A to Part 154—Guidelines for Detonation Flame Arresters
Appendix B to Part 154—Standard Specification for Tank Vent Flame Arresters
Appendix C to Part 154—Guidelines for Determining and Evaluating Required Response Resources for Facility Response Plans
Appendix D to Part 154—Training Elements for Oil Spill Response Plans

---

Authority: 33 U.S.C. 1231, 1321(j)(1)(C), (j)(5), (j)(6), and (m)(2); sec. 2, E.O. 12777, 56 FR 54757; Department of Homeland Security Delegation No. 0170.1. Subpart F is also issued under 33 U.S.C. 2735.

Subpart A—General

top

§ 154.100 Applicability.

top

(a) This part applies to each facility that is capable of transferring oil or hazardous materials, in bulk, to or from a vessel, where the vessel has a total capacity, from a combination of all bulk products carried, of 39.75 cubic meters (250 barrels) or more. This part does not apply to the facility when it is in a caretaker status. This part does not apply to any offshore facility operating under the jurisdiction of the Secretary of the Department of Interior.

(b) Upon written notice to the facility operator, the COTP may apply, as necessary for the safety of the facility, its personnel, or the public, all or portions of §154.735 to each facility that is capable of transferring oil or hazardous material, in bulk, only to or from a vessel with a capacity of less than 250 barrels. If the facility is in caretaker status, the COTP may not apply the provisions of §154.735 to the facility if its storage tanks and piping are gas free.

(c) Upon a determination by the COTP under §154.1016 that an MTR facility, as defined in subpart F, could reasonably be expected to cause substantial harm to the environment by discharging oil into or on the navigable waters, adjoining shorelines, or exclusive economic zone, subpart F of this part is applicable to the facility.

(d) The following sections of this part apply to mobile facilities:

(1) Section 154.105 Definitions.

(2) Section 154.107 Alternatives.

(3) Section 154.108 Exemptions.

(4) Section 154.110 Letter of Intent.

(5) Section 154.120 Facility examinations.

(6) Section 154.300 Operations Manual: General.

(7) Section 154.310 Operations Manual: Contents. Paragraphs (a)(2), (a)(3), (a)(5) through (a)(7), (a)(9), (a)(12), (a)(14), (a)(16), (a)(17)(ii) through (a)(17)(iv), (a)(18), (a)(20) through (23), (c) and (d).

(8) Section 154.320 Operations Manual: Amendment.

(9) Section 154.325 Operations Manual: Procedures for examination.

(10) Section 154.500 Hose assemblies. Paragraphs (a), (b), (c), (d)(1) through (3) and (e)(1) through (3).

(11) Section 154.520 Closure devices.

(12) Section 154.530 Small discharge containment. Paragraphs (a)(1) through (3) and (d).

(13) Section 154.545 Discharge containment equipment.

(14) Section 154.550 Emergency shutdown.

(15) Section 154.560 Communications.

(16) Section 154.570 Lighting. Paragraphs (c) and (d).

(17) Section 154.700 General.

(18) Section 154.710 Persons in charge: Designation and qualification. Paragraphs (a) through (c), (d)(1) through (3), (d)(7) and (e).

(19) Section 154.730 Persons in charge: Evidence of designation.

(20) Section 154.735 Safety requirements. Paragraphs (d), (f), (g), (j)(1) through (2), (k)(1) through (2), (m), (o) through (q), (r)(1) through (3), (s) and (v).

(21) Section 154.740 Records. Paragraphs (a) through (f) and (j).

(22) Section 154.750 Compliance with Operations Manual.

[CGD 86–034, 55 FR 36252, Sept. 4, 1990, as amended by CGD 91–036, 58 FR 7352, Feb. 5, 1993; CGD 93–056, 61 FR 41457, Aug. 8, 1996]

§ 154.105 Definitions.

top

As used in this part:

Barrel means a quantity of liquid equal to 42 U.S. gallons.

Boundary Line means any of the lines described in 46 CFR part 7.

Captain of the Port (COTP) means the U.S. Coast Guard officer commanding a Captain of the Port Zone described in part 3 of this chapter, or that person's authorized representative.

Caretaker status denotes a facility where all piping, hoses, loading arms, storage tanks, and related equipment in the marine transfer area are completely free of oil or hazardous materials, where these components have been certified as being gas free, where piping, hoses, and loading arms terminating near any body of water have been blanked, and where the facility operator has notified the COTP that the facility will be in caretaker status.

Commandant means the Commandant of the Coast Guard or an authorized representative.

Contiguous Zone means the entire zone established by the United States under Article 24 of the Convention on the Territorial Sea and the Contiguous Zone, but not extending beyond 12 miles from the baseline from which the breadth of the territorial sea is measured.

District Commander means the officer of the Coast Guard designated by the Commandant to command a Coast Guard District, as described in part 3 of this chapter or an authorized representative.

Facility means either an onshore or offshore facility, except for an offshore facility operating under the jurisdiction of the Secretary of the Department of Interior, and includes, but is not limited to, structure, equipment, and appurtenances thereto, used or capable of being used to transfer oil or hazardous materials to or from a vessel or public vessel. Also included are facilities that tank clean or strip and any floating structure that is used to support an integral part of the facility's operation. A facility includes federal, state, municipal, and private facilities.

Facility operator means the person who owns, operates, or is responsible for the operation of the facility.

Hazardous material means a liquid material or substance, other than oil or liquefied gases, listed under 46 CFR 153.40 (a), (b), (c), or (e).

Marine transfer area means that part of a waterfront facility handling oil or hazardous materials in bulk between the vessel, or where the vessel moors, and the first manifold or shutoff valve on the pipeline encountered after the pipeline enters the secondary containment required under 40 CFR 112.7 or 49 CFR 195.264 inland of the terminal manifold or loading arm, or, in the absence of secondary containment, to the valve or manifold adjacent to the bulk storage tank, including the entire pier or wharf to which a vessel transferring oil or hazardous materials is moored.

MARPOL 73/78 means the International Convention for the Prevention of Pollution from Ships, 1973 (done at London, November 2, 1973) as modified by the Protocol of 1978 relating to the International Convention for the Prevention of Pollution from Ships, 1973 (done at London, February 17, 1978).

Mobile facility means any facility that can readily change location, such as a tank truck or tank car, other than a vessel or public vessel.

Monitoring device means any fixed or portable sensing device used to monitor for a discharge of oil or hazardous material onto the water, within or around a facility, and designed to notify operating personnel of a discharge of oil or hazardous material.

Officer in Charge, Marine Inspection (OCMI) means the U.S. Coast Guard officer commanding a Marine Inspection Zone described in part 3 of this chapter, or an authorized representative.

Offshore facility means any facility of any kind located in, on, or under, any of the navigable waters of the United States, and any facility of any kind which is subject to the jurisdiction of the United States and is located in, on, or under any other waters, other than a vessel or a public vessel.

Oil means oil of any kind or in any form, including but not limited to, petroleum, fuel oil, sludge, oil refuse, and oil mixed with wastes other than dredged spoil.

Onshore facility means any facility (including, but not limited to, motor vehicles and rolling stock) of any kind located in, on, or under any land within the United States other than submerged land.

Person in charge means an individual designated as a person in charge of transfer operations under §154.710 (for facilities) or §155.700 (for vessels) of this chapter.

STCW means the International Convention on Standards of Training, Certification, and Watchkeeping for Seafarers, 1978.

Self-propelled tank vessel means a self-propelled tank vessel other than a tankship.

Tank barge means a non-self-propelled tank vessel.

Tankship means a self-propelled tank vessel constructed or adapted primarily to carry oil or hazardous material in bulk in the cargo spaces.

Tank vessel means a vessel that is constructed or adapted to carry, or that carries, oil or hazardous material in bulk as cargo or cargo residue, and that—

(a) Is a vessel of the United States;

(b) Operates on the navigable waters of the United States; or

(c) Transfers oil or hazardous material in a port or place subject to the jurisdiction of the United States.

Transfer means any movement of oil or hazardous material to, from, or within a vessel by means of pumping, gravitation, or displacement. A transfer is considered to begin when the person in charge on the transferring vessel or facility and the person in charge on the receiving facility or vessel first meet to begin completing the declaration of inspection as required by §156.150 of this chapter. A transfer is considered to be complete when all the connections for the transfer have been uncoupled and secured with blanks or other closure devices and both of the persons in charge have completed the declaration of inspection to include the date and time the transfer was complete.

Vessel operator means a person who owns, operates, or is responsible for the operation of a vessel.

[CGD 75–124, 45 FR 7169, Jan. 31, 1980, as amended by CGD 86–034, 55 FR 36252, Sept. 4, 1990;

CGD 79–116, 60 FR 17141, Apr. 4, 1995; CGD 93–056, 61 FR 41458, Aug. 8, 1996; 62 FR 3610, Jan. 24, 1997; CGD 79–116, 62 FR 25125, May 8, 1997]

§ 154.106 Incorporation by reference: Where can I get a copy of the publications incorporated by reference in this part?

top

(a) Certain material is incorporated by reference (IBR) into this part with the approval of the Director of the Federal Register under 5 U.S.C. 552(a) and 1 CFR part 51. To enforce any edition other than that specified in this section, the Coast Guard must publish notice of change in the Federal Register and the material must be available to the public. All approved material is available for inspection at the National Archives and Records Administration (NARA). For information on the availability of this material at NARA, call 202–741–6030 or go to *http://www.archives.gov/federal_register/code_of_federal_regulations/ibr_locations.html* . Also, it is available for inspection at the Coast Guard, Office of Port and Facility Activities, Cargo and Facilities Division (CG–5332), 2100 2nd St., SW., Stop 7363, Washington, DC 20593–7363, 202–372–2234 and is available from the sources indicated in this section below.

(b) American Petroleum Institute (API), 1220 L Street NW., Washington, DC 20037, 202–682–8000, *http://www.api.org/* :

(1) API Standard 2000, Venting Atmospheric and Low-Pressure Storage Tanks (Nonrefrigerated and Refrigerated), Third Edition, January 1982 (reaffirmed December 1987), IBR approved for §154.814.

(2) API Recommended Practice 550, Manual on Installation of Refinery Instruments and Control Systems, Part II—Process Stream Analyzers, Section 1—Oxygen Analyzers, Fourth Edition, February 1985, IBR approved for §154.824.

(c) American National Standards Institute (ANSI), 11 West 42nd Street, New York, NY 10036, 202–293–8020, *http://www.ansi.org* :

(1) ANSI B16.5, Steel Pipe Flanges and Flanged Fittings, 1988, IBR approved for §§154.500, 154.808, and 154.810.

(2) ANSI B16.24, Bronze Pipe Flanges and Flange Fittings Class 150 and 300, 1979, IBR approved for §§154.500 and 154.808.

(3) ANSI B31.3, Chemical Plant and Petroleum Refinery Piping, 1987 (including B31.3a–1988, B31.3b–1988, and B31.3c–1989 addenda), IBR approved for §§154.510 and 154.808.

(d) ASTM International, 100 Barr Harbor Drive, West Conshohocken, PA 19428–2959, 610–832–9585, *http://www.astm.org/* :

(1) ASTM F631–93, Standard Guide for Collecting Skimmer Performance Data in Controlled Environments, IBR approved for Appendix C.

(2) ASTM F715–95, Standard Test Methods for Coated Fabrics Used for Oil Spill Control and Storage, IBR approved for Appendix C.

(3) ASTM F722–82 (1993), Standard Specification for Welded Joints for Shipboard Piping Systems, IBR approved for Appendix A and Appendix B.

(4) ASTM F1122–87 (1992), Standard Specification for Quick Disconnect Couplings, IBR approved for §154.500.

(5) ASTM F1155–98, Standard Practice for Selection and Application of Piping System Materials, IBR approved for Appendix A and Appendix B.

(6) ASTM F1413–07, Standard Guide for Oil Spill Dispersant Application Equipment: Boom and Nozzle Systems, IBR approved for §154.1045.

(7) ASTM F1737–07, Standard Guide for Use of Oil Spill Dispersant Application Equipment During Spill Response: Boom and Nozzle Systems, IBR approved for §154.1045.

(8) ASTM F1779–08, Standard Practice for Reporting Visual Observations of Oil on Water, IBR

approved for §154.1045.

(e) International Electrotechnical Commission (IEC), Bureau Central de la Commission Electrotechnique Internationale, 1 rue de Varembe, Geneva, Switzerland, +41–22–919–02–11, *http://www.iec.ch/* :

(1) IEC 309–1—Plugs, Socket-Outlets and Couplers for Industrial Purposes: Part 1, General Requirements, 1979, IBR approved for §154.812.

(2) IEC 309–2—Plugs, Socket-Outlets and Couplers for Industrial Purposes: Part 2, Dimensional Interchangeability Requirements for Pin and Contact-tube Accessories, 1981, IBR approved for §154.812.

(f) National Electrical Manufacturers Association (NEMA), 1300 North 17th Street, Suite 1752, Rosslyn, Virginia 22209, 703–841–3200, *http://www.nema.org/* :

(1) ANSI NEMA WD–6—Wiring Devices, Dimensional Requirements, 1988, IBR approved for §154.812.

(2) [Reserved]

(g) National Fire Protection Association (NFPA), 1 Batterymarch Park, Quincy, MA 02269–9101, 617–770–3000, *http://www.nfpa.org/* :

(1) NFPA 51B, Standard for Fire Prevention in Use of Cutting and Welding Processes, 1994, IBR approved for §154.735.

(2) NFPA 70, National Electrical Code, 2008, IBR approved for §154.812.

(h) Oil Companies International Marine Forum (OCIMF), 29 Queen Anne's Gate, London, SW1H 9BU, England, +44–0–20–7654–1200, *http://www.ocimf.com/* :

(1) International Safety Guide for Oil Tankers and Terminals, Section 6.10, Fourth Ed., 1996, IBR approved for §154.810.

(2) International Safety Guide for Oil Tankers and Terminals, Sections 9.1, 9.2, 9.3 and 9.5, Fourth Ed., 1996, IBR approved for §154.735.

[USCG–2001–8661, 74 FR 45022, Aug. 31, 2009, as amended at USCG–2010–0351, 75 FR 36284, June 25, 2010]

§ 154.107 Alternatives.

top

(a) The COTP may consider and approve alternative procedures, methods, or equipment standards to be used by a facility operator in lieu of any requirement in this part if:

(1) Compliance with the requirement is economically or physically impractical;

(2) The alternative provides an equivalent level of safety and protection from pollution by oil or hazardous material, which is documented in the request; and

(3) The facility operator submits a written request for the alternative.

(b) The COTP takes final approval or disapproval action on the request, submitted in accordance with paragraph (a) of this section, in writing within 30 days of receipt of the request.

[CGD 75–124, 45 FR 7169, Jan. 31, 1980, as amended by CGD 86–034, 55 FR 36252, Sept. 4, 1990; CGD 93–056, 61 FR 41458, Aug. 8, 1996]

§ 154.108 Exemptions.

top

(a) The Assistant Commandant for Marine Safety, Security and Environmental Protection, acting for the

Commandant, grants an exemption or partial exemption from compliance with any requirement in this part if:

(1) A facility operator submits an application for the exemption via the COTP; and

(2) It is determined, from the application, that:

(i) Compliance with the requirement is economically or physically impractical;

(ii) No alternative procedures, methods, or equipment standards exist that would provide an equivalent level of safety and protection from pollution by oil or hazardous material; and

(iii) The likelihood of oil or hazardous material being discharged is not substantially increased as a result of the exemption.

(b) If requested, the applicant must submit any appropriate information, including an environmental and economic assessment of the effects of and reasons for the exemption, and proposed procedures, methods or equipment standards.

(c) The exemption may specify the procedures, methods, or equipment standards that will apply.

(d) An exemption is granted or denied in writing. The decision of the Assistant Commandant for Marine Safety, Security and Environmental Protection is a final agency action.

[CGD 75–124, 45 FR 7169, Jan. 31, 1980, as amended by CGD 88–052, 53 FR 25122, July 1, 1988; CGD 86–034, 55 FR 36252, Sept. 4, 1990; 55 FR 49997, Dec. 4, 1990; CGD 96–026, 61 FR 33666, June 28, 1996; CGD 93–056, 61 FR 41458, Aug. 8, 1996; CGD 97–023, 62 FR 33364, June 19, 1997; USCG–2002–12471, 67 FR 41333, June 18, 2002]

§ 154.110 Letter of intent.

top

(a) The facility operator of any facility to which this part applies must submit a letter of intent to operate a facility or to conduct mobile facility operations to the COTP not less than 60 days before the intended operations unless a shorter period is allowed by the COTP. Previously submitted letters of intent need not be resubmitted.

(b) The letter of intent required by paragraph (a) of this section may be in any form but must contain:

(1) The names, addresses, and telephone numbers of the facility operator and the facility owner;

(2) The name, address, and telephone number of the facility or, in the case of a mobile facility, the dispatching office; and

(3) Except for a mobile facility, the geographical location of the facility in relation to the associated body of navigable waters.

(c) The facility operator of any facility for which a letter of intent has been submitted, shall within five (5) days advise the COTP in writing of any changes of information and shall cancel, in writing, the letter for any facility at which transfer operations are no longer conducted.

[CGD 75–124, 45 FR 7169, Jan. 31, 1980, as amended by CGD 86–034, 55 FR 36252, Sept. 4, 1990; CGD 93–056, 61 FR 41458, Aug. 8, 1996]

§ 154.120 Facility examinations.

top

(a) The facility operator shall allow the Coast Guard, at any time, to make any examination and shall perform, upon request, any test to determine compliance with this part and part 156, as applicable. The facility operator shall conduct all required testing of facility equipment in a manner acceptable to the Coast Guard.

(b) The COTP shall provide the facility operator with a written report of the results of the examination for

the record required by §154.740(e) and shall list the deficiencies in the report when the facility is not in compliance with the requirements in this part and part 156 of this chapter.

[CGD 75–124, 45 FR 7169, Jan. 31, 1980]

Subpart B—Operations Manual

top

§ 154.300 Operations manual: General.

top

(a) The facility operator of each facility to which this part applies shall submit, with the letter of intent, two copies of an Operations Manual that:

(1) Describes how the applicant meets the operating rules and equipment requirements prescribed by this part and part 156 of this chapter;

(2) Describes the responsibilities of personnel under this part and part 156 of this chapter in conducting transfer operations; and

(3) Includes translations into a language or languages understood by all designated persons in charge of transfer operations employed by the facility.

(b) The facility operator shall maintain the operations manual so that it is:

(1) Current; and

(2) Readily available for examination by the COTP.

(c) The COTP shall examine the Operations Manual when submitted, after any substantial amendment, and as otherwise required by the COTP.

(d) In determining whether the manual meets the requirements of this part and part 156 of this chapter the COTP shall consider the size, complexity, and capability of the facility.

(e) If the manual meets the requirements of this part and part 156 of this chapter, the COTP will return one copy of the manual marked "Examined by the Coast Guard" as described in §154.325.

(f) The facility operator shall ensure that a sufficient number of copies of the examined Operations Manual, including a sufficient number of the translations required by paragraph (a)(3) of this section, are readily available for each facility person in charge while conducting a transfer operation.

Note: The facility operator may request that the contents of the operations manual or portions thereof be considered commercial or financial information that is privileged or confidential. Under the Freedom of Information Act, the Coast Guard would withhold any part of the contents of the operations manual from public disclosure upon determining that it is commercial or financial information that is privileged or confidential.

[CGD 75–124, 45 FR 7169, Jan. 31, 1980, as amended by CGD 86–034, 55 FR 36253, Sept. 4, 1990; CGD 93–056, 61 FR 41458, Aug. 8, 1996]

§ 154.310 Operations manual: Contents.

top

(a) Each operations manual required by §154.300 must contain:

(1) The geographic location of the facility;

(2) A physical description of the facility including a plan and/or plans, maps, drawings, aerial photographs or diagrams, showing the boundaries of the facility subject to Coast Guard jurisdiction,

mooring areas, transfer locations, control stations, wharfs, the extent and scope of the piping subject to the tests required by §156.170(c)(4) of this chapter, and the locations of safety equipment. For mobile facilities, a physical description of the facility;

(3) The hours of operation of the facility;

(4) The sizes, types, and number of vessels that the facility can transfer oil or hazardous material to or from simultaneously;

(5) For each product transferred at the facility:

(i) Generic or chemical name; and

(ii) The following cargo information:

(*a*) The name of the cargo as listed under appendix II of annex II of MARPOL 73/78, Table 30.25–1 of 46 CFR 30.25–1, Table 151.05 of 46 CFR 151.05–1, or Table 1 of 46 CFR part 153.

(*b*) A description of the appearance of the cargo;

(*c*) A description of the odor of the cargo;

(*d*) The hazards involved in handling the cargo;

(*e*) Instructions for safe handling of the cargo;

(*f*) The procedures to be followed if the cargo spills or leaks, or if a person is exposed to the cargo; and

(*g*) A list of fire fighting procedures and extinguishing agents effective with fires involving the cargo.

(6) The minimum number of persons on duty during transfer operations and their duties;

(7) The name and telephone number of the qualified individual identified under §154.1026 of this part and the title and/or position and telephone number of the Coast Guard, State, local, and other personnel who may be called by the employees of the facility in an emergency;

(8) The duties of watchmen, required by §155.810 of this chapter and 46 CFR 35.05–15, for unmanned vessels moored at the facility;

(9) A description of each communication system required by this part;

(10) The location and facilities of each personnel shelter, if any;

(11) A description and instructions for the use of drip and discharge collection and vessel slop reception facilities, if any;

(12) A description and the location of each emergency shutdown system;

(13) Quantity, types, locations, and instructions for use of monitoring devices if required by §154.525;

(14) Quantity, type, location, instructions for use, and time limits for gaining access to the containment equipment required by §154.545;

(15) Quantity, type, location, and instructions for use of fire extinguishing equipment required by §154.735(d) of this part;

(16) The maximum allowable working pressure (MAWP) of each loading arm, transfer pipe system, and hose assembly required to be tested by §156.170 of this chapter, including the maximum relief valve setting (or maximum system pressure when relief valves are not provided) for each transfer system;

(17) Procedures for:

(i) Operating each loading arm including the limitations of each loading arm;

(ii) Transferring oil or hazardous material;

(iii) Completion of pumping; and

(iv) Emergencies;

(18) Procedures for reporting and initial containment of oil or hazardous material discharges;

(19) A brief summary of applicable Federal, state, and local oil or hazardous material pollution laws and regulations;

(20) Procedures for shielding portable lighting authorized by the COTP under §154.570(c); and

(21) A description of the training and qualification program for persons in charge.

(22) Statements explaining that each hazardous materials transfer hose is marked with either the name of each product which may be transferred through the hose or with letters, numbers, symbols, color codes or other system acceptable to the COTP representing all such products and the location in the Operations Manual where a chart or list of symbols utilized is located and a list of the compatible products which may be transferred through the hose can be found for consultation before each transfer; and

(23) For facilities that conduct tank cleaning or stripping operations, a description of their procedures.

(b) If a facility collects vapors emitted from vessel cargo tanks for recovery, destruction, or dispersion, the operations manual must contain a description of the vapor collection system at the facility which includes:

(1) A line diagram or simplified piping and instrumentation diagram (P&ID) of the facility's vapor control system piping, including the location of each valve, control device, pressure-vacuum relief valve, pressure indicator, flame arrester, and detonation arrester; and

(2) A description of the vapor control system's design and operation including the:

(i) Vapor line connection;

(ii) Startup and shutdown procedures;

(iii) Steady state operating procedures;

(iv) Provisions for dealing with pyrophoric sulfide (for facilities which handle inerted vapors of cargoes containing sulfur);

(v) Alarms and shutdown devices; and

(vi) Pre-transfer equipment inspection requirements.

(c) The facility operator shall incorporate a copy of each amendment to the operations manual under §154.320 in each copy of the manual with the related existing requirement, or add the amendment at the end of each manual if not related to an existing requirement.

(d) The operations manual must be written in the order specified in paragraph (a) of this section, or contain a cross-referenced index page in that order.

(Approved by the Office of Management and Budget under control number 1625–0093)

[CGD 75–124, 45 FR 7171, Jan. 31, 1980, as amended by CGD 88–102, 55 FR 25428, June 21, 1990; CGD 86–034, 55 FR 36253, Sept. 4, 1990; CGD 92–027, 58 FR 39662, July 26, 1993; CGD 93–056, 61 FR 41459, Aug. 8, 1996; USCG–2006–25150, 71 FR 39209, July 12, 2006]

§ 154.320 Operations manual: Amendment.

top

(a) Using the following procedures, the COTP may require the facility operator to amend the operations manual if the COTP finds that the operations manual does not meet the requirements in this part:

(1) The COTP will notify the facility operator in writing of any inadequacies in the Operations Manual. The facility operator may submit written information, views, and arguments regarding the inadequacies identified, and proposals for amending the Manual, within 45 days from the date of the COTP notice. After considering all relevant material presented, the COTP shall notify the facility operator of any amendment required or adopted, or the COTP shall rescind the notice. The amendment becomes effective 60 days after the facility operator receives the notice, unless the facility operator petitions the Commandant to review the COTP's notice, in which case its effective date is delayed pending a decision by the Commandant. Petitions to the Commandant must be submitted in writing via the COTP who issued the requirement to amend the Operations Manual.

(2) If the COTP finds that there is a condition requiring immediate action to prevent the discharge or risk of discharge of oil or hazardous material that makes the procedure in paragraph (a)(1) of this section impractical or contrary to the public interest, the COTP may issue an amendment effective on the date the facility operator receives notice of it. In such a case, the COTP shall include a brief statement of the reasons for the findings in the notice. The owner or operator may petition the Commandant to review the amendment, but the petition does not delay the amendment.

(b) The facility operator may propose amendments to the operations manual by:

(1) Submitting any proposed amendment and reasons for the amendment to the COTP not less than 30 days before the requested effective date of the proposed amendment; or

(2) If an immediate amendment is needed, requesting the COTP to approve the amendment immediately.

(c) The COTP shall respond to proposed amendments submitted under paragraph (b) of this section by:

(1) Approving or disapproving the proposed amendments;

(2) Advising the facility operator whether the request is approved, in writing, before the requested date of the amendments;

(3) Including any reasons in the written response if the request is disapproved; and

(4) If the request is made under paragraph (b)(2) of this section immediately approving or rejecting the request.

(d) Amendments to personnel and telephone number lists required by §154.310(a)(7) of this part do not require examination by the COTP, but the COTP must be advised of such amendments as they occur.

[CGD 75–124, 45 FR 7171, Jan. 31, 1980, as amended by CGD 86–034, 55 FR 36253, Sept. 4, 1990; CGD 93–056, 61 FR 41459, Aug. 8, 1996]

§ 154.325 Operations manual: Procedures for examination.

top

(a) The operator of a facility shall submit two copies of the Operations Manual to the Captain of the Port of the zone in which the facility is located.

(b) Not less than 60 days prior to any transfer operation, the operator of a new facility shall submit, with the letter of intent, two copies of the Operations Manual to the Captain of the Port of the zone in which the facility is located.

(c) After a facility is removed from caretaker status, not less than 30 days prior to any transfer operation the operator of that facility shall submit two copies of the Operations Manual to the COTP of the zone in which the facility is located unless the manual has been previously examined and no changes have been made since the examination.

(d) If the COTP finds that the Operations Manual meets the requirements of this part and part 156 of this chapter, the COTP will return one copy of the manual to the operator marked “Examined by the Coast Guard”.

(e) If the COTP finds that the Operations Manual does not meet the requirements of this part and/or part 156 of this chapter, the COTP will return the manuals with an explanation of why it does not meet the requirements of this chapter.

(f) No person may use any Operations Manual for transfer operations as required by this chapter unless the Operations Manual has been examined by the COTP.

(g) The Operations Manual is voided if the facility operator—

(1) Amends the Operations Manual without following the procedures in §154.320 of this part;

(2) Fails to amend the Operations Manual when required by the COTP; or

(3) Notifies the COTP in writing that the facility will be placed in caretaker status.

[CGD 93–056, 61 FR 41459, Aug. 8, 1996]

Subpart C—Equipment Requirements

top

§ 154.500 Hose assemblies.

top

Each hose assembly used for transferring oil or hazardous material must meet the following requirements:

(a) The minimum design burst pressure for each hose assembly must be at least four times the sum of the pressure of the relief valve setting (or four times the maximum pump pressure when no relief valve is installed) plus the static head pressure of the transfer system, at the point where the hose is installed.

(b) The maximum allowable working pressure (MAWP) for each hose assembly must be more than the sum of the pressure of the relief valve setting (or the maximum pump pressure when no relief valve is installed) plus the static head pressure of the transfer system, at the point where the hose is installed.

(c) Each nonmetallic hose must be usable for oil or hazardous material service.

(d) Each hose assembly must either have:

(1) Full threaded connections;

(2) Flanges that meet ANSI B16.5 or B16.24 (both incorporated by reference; *see* §154.106); or

(3) Quick-disconnect couplings that meet ASTM F 1122 (incorporated by reference, see §154.106).

(e) Each hose must be marked with one of the following:

(1) The name of each product for which the hose may be used; or

(2) For oil products, the words “OIL SERVICE”; or

(3) For hazardous materials, the words “HAZMAT SERVICE—SEE LIST” followed immediately by a letter, number or other symbol that corresponds to a list or chart contained in the facility's operations manual or the vessel's transfer procedure documents which identifies the products that may be transferred through a hose bearing that symbol.

(f) Each hose also must be marked with the following, except that the information required by paragraphs (f)(2) and (3) of this section need not be marked on the hose if it is recorded in the hose records of the vessel or facility, and the hose is marked to identify it with that information:

(1) Maximum allowable working pressure;

(2) Date of manufacture; and

(3) Date of the latest test required by §156.170.

(g) The hose burst pressure and the pressure used for the test required by §156.170 of this chapter must not be marked on the hose and must be recorded elsewhere at the facility as described in paragraph (f) of this section.

(h) Each hose used to transfer fuel to a vessel that has a fill pipe for which containment can not practically be provided must be equipped with an automatic back pressure shutoff nozzle.

[CGD 75–124, 45 FR 7172, Jan. 31, 1980, as amended by CGD 86–034, 55 FR 36253, Sept. 4, 1990; CGD 88–032, 56 FR 35820, July 29, 1991; CGD 92–027, 58 FR 39662, July 26, 1993; CGD 93–056, 61 FR 41459, Aug. 8, 1996; USCG–2000–7223, 65 FR 40057, June 29, 2000; USCG–2001–8661, 74 FR 45022, Aug. 31, 2009]

§ 154.510 Loading arms.

top

(a) Each mechanical loading arm used for transferring oil or hazardous material and placed into service after June 30, 1973, must meet the design, fabrication, material, inspection, and testing requirements in ANSI B31.3 (incorporated by reference; *see* §154.106).

(b) The manufacturer's certification that the standard in paragraph (a) of this section has been met must be permanently marked on the loading arm or recorded elsewhere at the facility with the loading arm marked to identify it with that information.

(c) Each mechanical loading arm used for transferring oil or hazardous material must have a means of being drained or closed before being disconnected after transfer operations are completed.

[CGD 75–124, 45 FR 7172, Jan. 31, 1980, as amended by CGD 86–034, 55 FR 36253, Sept. 4, 1990; USCG–2001–8661, 74 FR 45022, Aug. 31, 2009]

§ 154.520 Closure devices.

top

(a) Except as provided in paragraph (b) of this section, each facility to which this part applies must have enough butterfly valves, wafer-type resilient seated valves, blank flanges, or other means acceptable to the COTP to blank off the ends of each hose or loading arm that is not connected for the transfer of oil or hazardous material. Such hoses and/or loading arms must be blanked off during the transfer of oil or hazardous material. A suitable material in the joints and couplings shall be installed on each end of the hose assembly or loading arm not being used for transfer to ensure a leak-free seal.

(b) A new, unused hose, and a hose that has been cleaned and is gas free, is exempt from the requirements of paragraph (a) of this section.

[CGD 93–056, 61 FR 41459, Aug. 8, 1996]

§ 154.525 Monitoring devices.

top

The COTP may require the facility to install monitoring devices if the installation of monitoring devices at the facility would significantly limit the size of a discharge of oil or hazardous material and either:

(a) The environmental sensitivity of the area requires added protection;

(b) The products transferred at the facility pose a significant threat to the environment; or

(c) The size or complexity of the transfer operation poses a significant potential for a discharge of oil or hazardous material.

[CGD 75–124, 45 FR 7172, Jan. 31, 1980, as amended by CGD 86–034, 55 FR 36253, Sept. 4, 1990]

§ 154.530 Small discharge containment.

top

(a) Except as provided in paragraphs (c), (d), and (e) of this section, each facility to which this part applies must have fixed catchments, curbing, or other fixed means to contain oil or hazardous material discharged in at least—

(1) Each hose handling and loading arm area (that area on the facility that is within the area traversed by the free end of the hose or loading arm when moved from its normal stowed or idle position into a position for connection);

(2) Each hose connection manifold area; and

(3) Under each hose connection that will be coupled or uncoupled as part of the transfer operation during coupling, uncoupling, and transfer.

(b) The discharge containment means required by paragraph (a) of this section must have a capacity of at least:

(1) Two barrels if it serves one or more hoses of 6-inch inside diameter or smaller, or loading arms of 6-inch nominal pipe size diameter or smaller;

(2) Three barrels if it serves one or more hoses with an inside diameter of more than 6-inches, but less than 12 inches, or loading arms with a nominal pipe size diameter of more than 6 inches, but less than 12 inches; or

(3) Four barrels if it serves one or more hoses of 12-inch inside diameter or larger, or loading arms of 12-inch nominal pipe size diameter or larger.

(c) The facility may use portable means of not less than1/2barrel capacity each to meet the requirements of paragraph (a) of this section for part or all of the facility if the COTP finds that fixed means to contain oil or hazardous material discharges are not feasible.

(d) A mobile facility may have portable means of not less than five gallons capacity to meet the requirements of paragraph (a) of this section.

(e) Fixed or portable containment may be used to meet the requirements of paragraph (a)(3) of this section.

[CGD 75–124, 45 FR 7172, Jan. 31, 1980, as amended by CGD 86–034, 55 FR 36253, Sept. 4, 1990; CGD 93–056, 61 FR 41460, Aug. 8, 1996]

§ 154.540 Discharge removal.

top

Each facility to which this part applies must have a means to safely remove discharged oil or hazardous material, within one hour of completion of the transfer, from the containment required by §154.530 of this part without discharging the oil or hazardous material into the water.

[CGD 93–056, 61 FR 41460, Aug. 8, 1996]

§ 154.545 Discharge containment equipment.

top

(a) Each facility must have ready access to enough containment material and equipment to contain any oil or hazardous material discharged on the water from operations at that facility.

(b) For the purpose of this section, “access” may be by direct ownership, joint ownership, cooperative venture, or contractual agreement.

(c) Each facility must establish time limits, subject to approval by the COTP, for deployment of the containment material and equipment required by paragraph (a) of this section considering:

(1) Oil or hazardous material handling rates;

(2) Oil or hazardous material capacity susceptible to being spilled;

(3) Frequency of facility operations;

(4) Tidal and current conditions;

(5) Facility age and configuration; and

(6) Past record of discharges.

(d) The COTP may require a facility to surround each vessel conducting an oil or hazardous material transfer operation with containment material before commencing a transfer operation if—

(1) The environmental sensitivity of the area requires the added protection;

(2) The products transferred at the facility pose a significant threat to the environment;

(3) The past record of discharges at the facility is poor; or

(4) The size or complexity of the transfer operation poses a significant potential for a discharge of oil or hazardous material; and

(5) The use of vessel containment provides the only practical means to reduce the extent of environmental damage.

(e) Equipment and procedures maintained to satisfy the provisions of this chapter may be utilized in the planning requirements of subpart F and subpart H of this part.

[CGD 75–124, 45 FR 7172, Jan. 31, 1980, as amended by CGD 86–034, 55 FR 36253, Sept. 4, 1990; CGD 93–056, 61 FR 41460, Aug. 8, 1996; USCG–1999–5149, 65 FR 40825, June 30, 2000]

§ 154.550 Emergency shutdown.

top

(a) The facility must have an emergency means to enable the person in charge of the transfer on board the vessel, at that person's usual operating station, to stop the flow of oil or hazardous material from the facility to the vessel. The means must be—

(1) An electrical, pneumatic, or mechanical linkage to the facility; or

(2) An electronic voice communications system continuously operated by a person on the facility who can stop the flow of oil or hazardous material immediately.

(b) The point in the transfer system at which the emergency means stops the flow of oil or hazardous material on the facility must be located near the dock manifold connection to minimize the loss of oil or hazardous material in the event of the rupture or failure of the hose, loading arm, or manifold valve.

(c) For oil transfers, the means used to stop the flow under paragraph (a) of this section must stop that flow within—

(1) 60 seconds on any facility or portion of a facility that first transferred oil on or before November 1, 1980; and

(2) 30 seconds on any facility that first transfers oil after November 1, 1980.

(d) For hazardous material transfers, the means used to stop the flow under paragraph (a) of this section must stop that flow within—

(1) 60 seconds on any facility or portion of a facility that first transferred hazardous material before October 4, 1990; and

(2) 30 seconds on any facility that first transfers hazardous material on or after October 4, 1990.

[CGD 86–034, 55 FR 36253, Sept. 4, 1990]

§ 154.560 Communications.

top

(a) Each facility must have a means that enables continuous two-way voice communication between the person in charge of the vessel transfer operation and the person in charge of the facility transfer operation.

(b) Each facility must have a means, which may be the communications system itself, that enables a person on board a vessel or on the facility to effectively indicate the desire to use the means of communication required by paragraph (a) of this section.

(c) The means required by paragraph (a) of this section must be usable and effective in all phases of the transfer operation and all conditions of weather at the facility.

(d) A facility may use the system in §154.550(a)(2) to meet the requirement of paragraph (a) of this section.

(e) Portable radio devices used to comply with paragraph (a) of this section during the transfer of flammable or combustible liquids must be marked as intrinsically safe by the manufacturer of the device and certified as intrinsically safe by a national testing laboratory or other certification organization approved by the Commandant as defined in 46 CFR 111.105–11. As an alternative to the marking requirement, facility operators may maintain documentation at the facility certifying that the portable radio devices in use at the facility are in compliance with this section.

[CGD 75–124, 45 FR 7172, Jan. 31, 1980; 45 FR 43705, June 30, 1980, as amended by CGD 93–056, 61 FR 41460, Aug. 8, 1996]

§ 154.570 Lighting.

top

(a) Except as provided in paragraph (c) of this section, for operations between sunset and sunrise, a facility must have fixed lighting that adequately illuminates:

(1) Each transfer connection point on the facility;

(2) Each transfer connection point in use on any barge moored at the facility to or from which oil or hazardous material is being transferred;

(3) Each transfer operations work area on the facility; and

(4) Each transfer operation work area on any barge moored at the facility to or from which oil or hazardous material is being transferred.

(b) Where the illumination is apparently inadequate, the COTP may require verification by instrument of the levels of illumination. On a horizontal plane 3 feet above the barge deck or walking surface, illumination must measure at least:

(1) 5.0 foot candles at transfer connection points; and

(2) 1.0 foot candle in transfer operations work areas.

(c) For small or remote facilities, the COTP may authorize operations with an adequate level of illumination provided by the vessel or by portable means.

(d) Lighting must be located or shielded so as not to mislead or otherwise interfere with navigation on the adjacent waterways.

[CGD 75–124, 45 FR 7172, Jan. 31, 1980, as amended by CGD 86–034, 55 FR 36253, Sept. 4, 1990]

Subpart D—Facility Operations

top

§ 154.700 General.

top

No person may operate a facility unless the equipment, personnel, and operating procedures of that facility meet the requirements of this part.

[CGD 75–124, 45 FR 7173, Jan. 31, 1980]

§ 154.710 Persons in charge: Designation and qualification.

top

No person may serve, and the facility operator may not use the services of a person, as person in charge of facility transfer operations unless:

(a) The facility operator has designated that person as a person in charge;

(b) The person has had at least 48 hours of experience in transfer operations at a facility in operations to which this part applies. The person also has enough experience at the facility for which qualification is desired to enable the facility operator to determine that the person's experience is adequate;

(c) The person has completed a training and qualification program established by the facility operator and described in the Operations Manual in accordance with §154.310(a)(21), that provides the person with the knowledge and training necessary to properly operate the transfer equipment at the facility, perform the duties described in paragraph (d) of this section, follow the procedures required by this part, and fulfill the duties required of a person in charge during an emergency, except that the COTP may approve alternative experience and training requirements for new facilities; and

(d) The facility operator must certify that each person in charge has the knowledge of, and skills necessary to—

(1) The hazards of each product to be transferred;

(2) The rules in this part and in part 156 of this chapter;

(3) The facility operating procedures as described in the operations manual;

(4) Vessel transfer systems, in general;

(5) Vessel transfer control systems, in general;

(6) Each facility transfer control system to be used;

(7) Follow local discharge reporting procedures; and

(8) Carry out the facility's response plan for discharge reporting and containment.

(e) Training conducted to comply with the hazard communication programs required by the Occupational Safety and Health Administration (OSHA) of the Department of Labor (DOL) (29 CFR 1910.1200) or the Environmental Protection Agency (EPA) (40 CFR 311.1), or to meet the requirements of subpart F of this part may be used to satisfy the requirements in paragraphs (c) and (d) of this section, as long as the training addresses the requirements in paragraphs (c) and (d) of this section.

(Sec. 311(j)(1)(C) of the Federal Water Pollution Control Act (86 Stat. 816, 868); 33 U.S.C. 1161(j)(1)(C); EO 11548, 3 CFR, 1966–1970 Comp., p. 949; 49 CFR 1.46(m))

[CGD 71–160R, 37 FR 28253, Dec. 21, 1972, as amended by CGD 86–034, 55 FR 36253, Sept. 4, 1990; CGD 93–056, 61 FR 41460, Aug. 8, 1996]

§ 154.730 Persons in charge: Evidence of designation.

top

Each person in charge shall carry evidence of his designation as a person in charge when he is engaged in transfer operations unless such evidence is immediately available at the facility.

(Sec. 311(j)(1)(C) of the Federal Water Pollution Control Act (86 Stat. 816, 868); 33 U.S.C. 1161(j)(1)(C); EO 11548, 3 CFR, 1966–1970 Comp., p. 949; 49 CFR 1.46(m))

[CGD 71–160R, 37 FR 28253, Dec. 21, 1972]

§ 154.735 Safety requirements.

top

Each operator of a facility to which this part applies shall ensure that the following safety requirements are met at the facility:

(a) Access to the facility by firefighting personnel, fire trucks, or other emergency personnel is not impeded.

(b) Materials which are classified as hazardous under 49 CFR parts 170 through 179 are kept only in the quantities needed for the operation or maintenance of the facility and are stored in storage compartments.

(c) Gasoline or other fuel is not stored on a pier, wharf, or other similar structure.

(d) A sufficient number of fire extinguishers approved by an independent laboratory listed in 46 CFR 162.028–5 for fighting small, localized fires are in place throughout the facility and maintained in a ready condition.

(e) The location of each hydrant, standpipe, hose station, fire extinguisher, and fire alarm box is conspicuously marked and readily accessible.

(f) Each piece of protective equipment is ready to operate.

(g) Signs indicating that smoking is prohibited are posted in areas where smoking is not permitted.

(h) Trucks and other motor vehicles are operated or parked only in designated locations.

(i) All rubbish is kept in receptacles.

(j) All equipment with internal combustion engines used on the facility—

(1) Does not constitute a fire hazard; and

(2) Has a fire extinguisher attached that is approved by an independent laboratory listed in 46 CFR 162.028–5, unless such a fire extinguisher is readily accessible nearby on the facility.

(k) Spark arresters are provided on chimneys or appliances which—

(1) Use solid fuel; or

(2) Are located where sparks constitute a hazard to nearby combustible material.

(l) All welding or hot work conducted on or at the facility is the responsibility of the facility operator. The COTP may require that the operator of the facility notify the COTP before any welding or hot work operations are conducted. Any welding or hot work operations conducted on or at the facility must be conducted in accordance with NFPA 51B (incorporated by reference; *see* §154.106). The facility operator shall ensure that the following additional conditions or criteria are met:

(1) Welding or hot work is prohibited during gas freeing operations, within 30.5 meters (100 feet) of bulk cargo operations involving flammable or combustible materials, within 30.5 meters (100 feet) of fueling

operations, or within 30.5 meters (100 feet) of explosives or 15.25 meters (50 feet) of other hazardous materials.

(2) If the welding or hot work is on the boundary of a compartment (*i.e.* , bulkhead, wall or deck) an additional fire watch shall be stationed in the adjoining compartment.

(3) Personnel on fire watch shall have no other duties except to watch for the presence of fire and to prevent the development of hazardous conditions.

(4) Flammable vapors, liquids or solids must first be completely removed from any container, pipe or transfer line subject to welding or hot work.

(5) Tanks used for storage of flammable or combustible substances must be tested and certified gas free prior to starting hot work.

(6) Proper safety precautions in relation to purging, inserting, or venting shall be followed for hot work on containers;

(7) All local laws and ordinances shall be observed;

(8) In case of fire or other hazard, all cutting, welding or other hot work equipment shall be completely secured.

(m) Heating equipment has sufficient clearance to prevent unsafe heating of nearby combustible material.

(n) Automotive equipment having an internal combustion engine is not refueled on a pier, wharf, or other similar structure.

(o) There are no open fires or open flame lamps.

(p) Electric wiring and equipment is maintained in a safe condition so as to prevent fires.

(q) Electrical wiring and electrical equipment installed after October 4, 1990, meet NFPA 70.

(r) Electrical equipment, fittings, and devices installed after October 4, 1990, show approval for that use by—

(1) Underwriters Laboratories;

(2) Factory Mutual Research Corporation; or

(3) Canadian Standards Association.

(s) Tank cleaning or gas freeing operations conducted by the facility on vessels carrying oil residues or mixtures shall be conducted in accordance with sections 9.1, 9.2, 9.3, and 9.5 of the OCIMF International Safety Guide for Oil Tankers and Terminals (ISGOTT) (incorporated by reference; *see* §154.106), except that—

(1) Prohibitions in ISGOTT against the use of recirculated wash water do not apply if the wash water is first processed to remove product residues;

(2) The provision in ISGOTT section 9.2.10 concerning flushing the bottom of tanks after every discharge of leaded gasoline does not apply;

(3) The provision in ISGOTT section 9.2.11 concerning that removal of sludge, scale, and sediment does not apply if personnel use breathing apparatus which protect them from the tank atmosphere; and

(4) Upon the request of the facility owner or operator in accordance with §154.107, the COTP may approve the use of alternative standards to ISGOTT if the COTP determines that the alternative standards provide an equal level of protection to the ISGOTT standards.

(t) Guards are stationed, or equivalent controls acceptable to the COTP are used to detect fires, report emergency conditions, and ensure that access to the marine transfer area is limited to—

(1) Personnel who work at the facility including persons assigned for transfer operations, vessel

personnel, and delivery and service personnel in the course of their business;

(2) Coast Guard personnel;

(3) Other Federal, State, or local governmental officials; and

(4) Other persons authorized by the operator.

(u) Smoking shall be prohibited at the facility except that facility owners or operators may authorize smoking in designated areas if—

(1) Smoking areas are designated in accordance with local ordinances and regulations;

(2) Signs are conspicuously posted marking such authorized smoking areas; and

(3) "No Smoking" signs are conspicuously posted elsewhere on the facility.

(v) Warning signs shall be displayed on the facility at each shoreside entry to the dock or berth, without obstruction, at all times for fixed facilities and for mobile facilities during coupling, transfer operation, and uncoupling. The warning signs shall conform to 46 CFR 151.45–2(e)(1) or 46 CFR 153.955.

[CGD 86–034, 55 FR 36253, Sept. 4, 1990, as amended by CGD 93–056, 61 FR 41460, Aug. 8, 1996; USCG–2001–8661, 74 FR 45022, Aug. 31, 2009]

§ 154.740 Records.

top

Each facility operator shall maintain at the facility and make available for examination by the COTP:

(a) A copy of the letter of intent for the facility;

(b) The name of each person designated as a person in charge of transfer operations at the facility and certification that each person in charge has completed the training requirements of §154.710 of this part;

(c) The date and result of the most recent test or examination of each item tested or examined under §156.170 of this chapter;

(d) The hose information required by §154.500 (e) and (g) except that marked on the hose;

(e) The record of all examinations of the facility by the COTP within the last 3 years;

(f) The Declaration of Inspection required by §156.150(f) of this chapter;

(g) A record of all repairs made within the last three years involving any component of the facility's vapor control system required by subpart E of this part;

(h) A record of all automatic shut downs of the facility's vapor control system within the last 3 years; and

(i) Plans, calculations, and specifications of the facility's vapor control system certified under §154.804 of this part.

(j) If they are not marked as such, documentation that the portable radio devices in use at the facility under §154.560 of this part are intrinsically safe.

(Approved by the Office of Management and Budget under control number 1625–0060)

[CGD 75–124, 45 FR 7173, Jan. 31, 1980, as amended by CGD 88–102, 55 FR 25429, June 21, 1990; CGD 86–034, 55 FR 36254, Sept. 4, 1990; CGD 93–056, 61 FR 41461, Aug. 8, 1996; USCG–2006–25150, 71 FR 39209, July 12, 2006]

§ 154.750 Compliance with operations manual.

top

The facility operator shall require facility personnel to use the procedures in the operations manual prescribed by §154.300 for operations under this part.

[CGD 75–124, 45 FR 7174, Jan. 31, 1980]

Subpart E—Vapor Control Systems

top

Source: CGD 88–102, 55 FR 25429, June 21, 1990, unless otherwise noted.

§ 154.800 Applicability.

top

(a) Except as specified by paragraph (c) of this section, this subpart applies to:

(1) Each facility which collects vapors of crude oil, gasoline blends, or benzene emitted from vessel cargo tanks;

(2) A vessel which is not a tank vessel that has a vapor processing unit located on board for recovery, destruction, or dispersion of crude oil, gasoline blends, or benzene vapors from a tank vessel; and

(3) Certifying entities which review, inspect, test, and certify facility vapor control systems.

(b) A facility which collects vapors of flammable or combustible cargoes other than crude oil, gasoline blends, or benzene, must meet the requirements prescribed by the Commandant (CG–522).

(c) A facility with an existing Coast Guard approved vapor control system which was operating prior to July 23, 1990 is subject only to §154.850 of this subpart as long as it receives cargo vapor only from the specific vessels for which it was approved.

(d) This subpart does not apply to the collection of vapors of liquefied flammable gases as defined in 46 CFR 30.10–39.

(e) When a facility vapor control system which receives cargo vapor from a vessel is connected to a facility vapor control system that serves tank storage areas and other refinery processes, the specific requirements of this subpart apply between the vessel vapor connection and the point where the vapor control system connects to the facility's main vapor control system.

[CGD 88–102, 55 FR 25429, June 21, 1990, as amended by CGD 96–026, 61 FR 33666, June 28, 1996; USCG–2010–0351, 75 FR 36284, June 25, 2010]

§ 154.802 Definitions.

top

As used in this subpart:

Certifying entity means an individual or organization accepted by the Commandant (CG–522) to review plans and calculations for vapor control system designs, and to conduct initial inspections and witness tests of vapor control system installations.

Existing vapor control system means a vapor control system which was operating prior to July 23, 1990.

Facility vapor connection means the point in a facility's vapor collection system where it connects to a vapor collection hose or the base of a vapor collection arm.

Inerted means the oxygen content of the vapor space in a tank vessel's cargo tank is reduced to 8 percent by volume or less in accordance with the inert gas requirements of 46 CFR 32.53 or 46 CFR 153.500.

Liquid knockout vessel means a device to separate liquid from vapor.

Maximum allowable transfer rate means the maximum volumetric rate at which a vessel may receive cargo or ballast.

New vapor control system means a vapor control system which is not an existing vapor control system.

Vapor balancing means the transfer of vapor displaced by incoming cargo from the tank of a vessel receiving cargo into a tank of the vessel or facility delivering cargo via a vapor collection system.

Vapor collection system means an arrangement of piping and hoses used to collect vapor emitted from a vessel's cargo tanks and transport the vapor to a vapor processing unit.

Vapor control system means an arrangement of piping and equipment used to control vapor emissions collected from a vessel, and includes the vapor collection system and the vapor processing unit.

Vapor destruction unit means a vapor processing unit that destroys cargo vapor by a means such as incineration.

Vapor dispersion system means a vapor processing unit which releases cargo vapor to the atmosphere through a venting system not located on the vessel being loaded or ballasted.

Vapor processing unit means the components of a vapor control system that recovers, destroys, or disperses vapor collected from a vessel.

Vapor recovery unit means a vapor processing unit that recovers cargo vapor by a non-destructive means such as lean oil absorbtion, carbon bed adsorption, or refrigeration.

Vessel vapor connection means the point in a vessel's fixed vapor collection system where it connects to a vapor collection hose or arm.

[CGD 88–102, 55 FR 25429, June 21, 1990, as amended by CGD 96–026, 61 FR 33666, June 28, 1996; USCG–2010–0351, 75 FR 36284, June 25, 2010]

§ 154.804 Review, certification, and initial inspection.

top

(a) A new vapor control system installation must be certified by a certifying entity as meeting the requirements of this subpart prior to operating.

(b) [Reserved]

(c) An existing vapor control system installation that has been Coast Guard approved for operation with specific vessels must be certified by a certifying entity prior to receiving vapors from other vessels.

(d) Plans and information submitted to the certifying entity must include a qualitative failure analysis. The analysis must demonstrate the following:

(1) The vapor control system is designed to permit the system to continuously operate safely when receiving cargo vapors from tankships and barges over the full range of transfer rates expected at the facility;

(2) The vapor control system is provided with the proper alarms and automatic control systems to prevent unsafe operation;

(3) The vapor control system is equipped with sufficient automatic or passive devices to minimize damage to personnel, property, and the environment if an accident were to occur; and

(4) If a quantitative failure analysis is also conducted, the level of safety attained is at least one order of magnitude greater than that calculated for operating without a vapor control system.

Note: The *American Institute of Chemical Engineers* publication, “Guidelines for Hazard Evaluation Procedures” may be used as guidance when preparing a qualitative failure analysis. Military Standard MIL-STD-882B may be used as guidance when preparing a

quantitative failure analysis.

(e) The certifying entity must conduct all initial inspections and witness all tests required to demonstrate that the facility:

(1) Conforms to certified plans and specifications;

(2) Meets the requirements of this subpart; and

(3) Is operating properly.

(f) Upon receipt of written certification from the certifying entity that a facility's vapor control system complies with the requirements of this part the COTP shall endorse the letter of adequacy required by §154.325 of this part to indicate that the facility is acceptable for collecting vapors of crude oil, gasoline blends, benzene, or any other vapors for which it is certified.

(g) Any design or configuration alteration involving a certified vapor control system must be reviewed by a certifying entity. After conducting any inspections and witnessing tests necessary to verify that the modified vapor control system meets the requirements of this subpart, the certifying entity must recertify the installation.

(h) Certifications issued in accordance with this section and a copy of the plans, calculations, and specifications for the vapor control system must be maintained at the facility.

(i) A certifying entity accepted under §154.806 of this subpart may not certify a facility vapor control system if it was involved in the design or installation of the system.

(Approved by the Office of Management and Budget under control number 1625–0060)

[CGD 88–102, 55 FR 25429, June 21, 1990, as amended by USCG–1998–3799, 63 FR 35531, June 30, 1998; USCG–2006–25150, 71 FR 39209, July 12, 2006]

§ 154.806 Application for acceptance as a certifying entity.

top

(a) An individual or organization seeking acceptance as a certifying entity must apply in writing to the Commandant (Stop 7363, Washington, DC 20593–7363). Each application must be signed and certified to be correct by the applicant or, if the applicant is an organization, by an authorized officer or official representative of the organization, and must include a letter of intent from a facility owner or operator to use the services of the individual or organization to certify a vapor control system installation. Any false statement or misrepresentation, or the knowing and willful concealment of a material fact may subject the applicant to prosecution under the provisions of 18 U.S.C. 1001, and denial or termination of acceptance as a certifying entity.

(b) The applicant must possess the following minimum qualifications, and be able to demonstrate these qualifications to the satisfaction of the Commandant (Stop 7363, Washington, DC 20593–7363):

(1) The ability to review and evaluate design drawings and failure analyses;

(2) A knowledge of the applicable regulations of this subpart, including the standards incorporated by reference in these regulations;

(3) The ability to monitor and evaluate test procedures and results;

(4) The ability to perform inspections and witness tests of bulk liquid cargo handling systems;

(5) That it is not controlled by an owner or operator of a vessel or facility engaged in controlling vapor emissions; and

(6) That it is not dependent upon Coast Guard acceptance under this section to remain in business.

(c) Each application for acceptance must contain the following:

(1) The name and address of the applicant, including subsidiaries and divisions if applicable;

(2) A statement that the applicant is not controlled by an owner or operator of a vessel or facility engaged in controlling vapor emissions, or a full disclosure of any ownership or controlling interest held by such owners or operators;

(3) A description of the experience and qualifications of the person(s) who would be reviewing or testing the systems;

(4) A statement that the person(s) who would be reviewing or testing the systems is/are familiar with the regulations in this subpart; and

(5) A statement that the Coast Guard may verify the information submitted in the application and may examine the person(s) who would be reviewing or testing the systems to determine their qualifications.

(d) The acceptance of a certifying entity may be terminated by the Commandant (Stop 7363, Washington, DC 20593–7363) if the entity fails to properly review, inspect, or test a system in accordance with this subpart.

Note: A list of entities accepted to certify facility vapor control system installations is available from the Commandant (Stop 7363, Washington, DC 20593–7363).

(Approved by the Office of Management and Budget under control number 1625–0060)

[CGD 88–102, 55 FR 25429, June 21, 1990, as amended by CGD 96–026, 61 FR 33666, June 28, 1996; USCG–2006–25150, 71 FR 39210, July 12, 2006; USCG–2010–0351, 75 FR 36284, June 25, 2010]

§ 154.808 Vapor control system, general.

top

(a) A vapor control system design and installation must eliminate potential overfill hazards, overpressure and vacuum hazards, and sources of ignition to the maximum practical extent. Each remaining hazard source which is not eliminated must be specifically addressed in the protection system design and operational requirements.

(b) Vapor collection system piping and fittings must be in accordance with ANSI B31.3 (incorporated by reference; see §154.106) and designed for a maximum allowable working pressure of at least 150 psig. Valves and flanges must be in accordance with ANSI B16.5 or B16.24 (both incorporated by reference; see §154.106), 150 pound class.

(c) All electrical equipment used in a vapor control system must comply with NFPA 70.

(d) Any pressure, flow, or concentration indication required by this part must provide a remote indicator on the facility where the cargo transfer and vapor control systems are controlled.

(e) Any alarm condition specified in this part must activate an audible and visible alarm where the cargo transfer and vapor control systems are controlled.

(f) The vapor control system must be separated or insulated from external heat sources to limit vapor control system piping surface temperature to not more than 177 °C. (350 °F.) during normal operation.

(g) A means must be provided to eliminate any liquid condensate from the vapor collection system which carries over from the vessel or condenses as a result of an enrichment process.

(h) If a liquid knockout vessel is installed it must have:

(1) A means to indicate the level of liquid in the device;

(2) A high liquid level sensor that activates an alarm; and

(3) A high high level sensor that closes the remotely operated cargo vapor shutoff valve required by §154.810(a) of this subpart and shuts down any compressors or blowers prior to liquid carrying over from the vessel to the compressor or blower.

(i) Vapor collection piping must be electrically grounded and electrically continuous.

(j) If the facility handles inerted vapors of cargoes containing sulfur, provisions must be made to control heating from pyrophoric iron sulfide deposits in the vapor collection line.

[CGD 88–102, 55 FR 25429, June 21, 1990, as amended by USCG–2001–8661, 74 FR 45023, Aug. 31, 2009]

§ 154.810 Vapor line connections.

top

(a) A remotely operated cargo vapor shutoff valve must be installed in the vapor collection line between the facility vapor connection and the nearest point where any inerting, enriching, or diluting gas is introduced into the vapor collection line or where a detonation arrester is fitted. The valve must:

(1) Close within thirty (30) seconds after detection of a shutdown condition by a component required by this subpart;

(2) Close automatically if the control signal is lost;

(3) Activate an alarm when a signal to shut down is received;

(4) Be capable of manual operation or manual activation;

(5) Have a local valve position indicator or be designed so that the valve position can be readily determined from the valve handle or valve stem position; and

(6) If the valve seat is fitted with resilient material, not allow appreciable leakage when the resilient material is damaged or destroyed.

(b) Except when a vapor collection arm is used, the last 1.0 meter (3.3 feet) of vapor piping before the facility vapor connection must be:

(1) Painted red/yellow/red with:

(i) The red bands 0.1 meter (0.33 feet) wide, and

(ii) The middle yellow band 0.8 meter (2.64 feet) wide; and

(2) Labeled "VAPOR" in black letters at least 50 millimeters (2 inches) high.

(c) Each facility vapor connection flange must have a permanently attached 0.5 inch diameter stud at least 1.0 inch long projecting outward from the flange face. The stud must be located at the top of the flange, midway between bolt holes, and in line with the bolt hole pattern.

(d) Each hose used for transferring vapors must:

(1) Have a design burst pressure of at least 25 psig;

(2) Have a maximum allowable working pressure of at least 5 psig;

(3) Be capable of withstanding at least 2.0 psi vacuum without collapsing or constricting;

(4) Be electrically continuous with a maximum resistance of ten thousand (10,000) ohms;

(5) Have flanges with:

(i) A bolt hole arrangement complying with the requirements for 150 pound class ANSI B16.5 (incorporated by reference; *see* §154.106) flanges, and

(ii) One or more 0.625 inch diameter holes in the flange located midway between bolt holes and in line with the bolt hole pattern;

(6) Be abrasion resistant and resistant to kinking; and

(7) Have the last 1.0 meter (3.3 feet) of each end of the vapor hose marked in accordance with paragraph (b) of this section.

(e) Vapor hose handling equipment must be provided with hose saddles which provide adequate support to prevent kinking or collapse of hoses.

(f) Fixed vapor collection arms must:

(1) Meet the requirements of paragraphs (d)(1) through (d)(5) of this section;

(2) Have the last 1.0 meter (3.3 feet) of the arm marked in accordance with paragraph (b) of this section.

(g) The facility vapor connection must be electrically insulated from the vessel vapor connection in accordance with section 6.10 of the OCIMF International Safety Guide for Oil Tankers and Terminals (incorporated by reference; see §154.106).

(h) A vapor collection system fitted with an enriching system that operates at a positive gauge pressure at the facility vapor connection must be fitted with:

(1) A manual isolation valve between each facility vapor connection and the remotely operated cargo vapor shutoff valve required by paragraph (a) of this section; and

(2) A means to prevent backflow of enriched vapor to the vessel's vapor collection system.

[CGD 88–102, 55 FR 25429, June 21, 1990, as amended by USCG–2001–8661, 74 FR 45023, Aug. 31, 2009]

§ 154.812 Facility requirements for vessel liquid overfill protection.

top

(a) Each facility which receives cargo vapor from a tank barge which is fitted with overfill protection in accordance with 46 CFR 39.20–9(a) as its only means of overfill protection must provide a 120 volt, 20 amp explosion proof receptacle which meets:

(1) ANSI/NEMA WD6 (incorporated by reference; see §154.106);

(2) NFPA 70, National Electrical Code, Articles 410–57 and 501–12; incorporated by reference; *see* §154.106); and

(3) 46 CFR 111.105–9.

(b) Each facility that receives cargo vapor from a tank barge fitted with an intrinsically safe cargo tank level sensor system complying with 46 CFR 39.20–9(b) as its only means of overfill protection must have an overfill control panel on the dock capable of powering and receiving an alarm and shutdown signal from the cargo tank level sensor system that:

(1) Closes the remotely operated cargo vapor shutoff valve required by §154.810(a) of this subpart and activates the emergency shutdown system required by §154.550 of this part when:

(i) A tank overfill signal is received from the barge, or

(ii) Electrical continuity of the cargo tank level sensor system is lost;

(2) Activates an alarm which is audible and visible to barge personnel and facility personnel when a tank overfill signal, or an optional high level signal corresponding to a liquid level lower than the tank overfill sensor setting, is received from the barge;

(3) Has a means to electrically and mechanically test the alarms and automatic shutdown systems prior to transferring cargo to or ballasting the tank barge;

(4) Has suitable means, such as approved intrinsic safety barriers able to accept passive devices, to ensure that the overfill and optional alarm circuits on the barge side of the overfill control panel, including cabling, normally closed switches, and pin and sleeve connectors, are intrinsically safe;

(5) Is labeled with the maximum allowable inductance and capacitance to be connected to the panel, as specified by the equipment manufacturer; and

(6) Has a female connecting plug for the tank barge level sensor system with a 5 wire, 16 amp connector body meeting IEC 309–1/309–2 (incorporated by reference; *see* §154.106) which is:

(i) Configured with pins S2 and R1 for the tank overfill sensor circuit, pin G connected to the cabling shield, and pins N and T3 reserved for an optional high level alarm connection;

(ii) Labeled "Connector for Barge Overflow Control System"; and

(iii) Connected to the overfill control panel by a shielded flexible cable.

[CGD 88–102, 55 FR 25429, June 21, 1990, as amended by USCG–2001–8661, 74 FR 45023, Aug. 31, 2009]

§ 154.814 Facility requirements for vessel vapor overpressure and vacuum protection.

top

(a) A facility's vapor collection system must have the capacity for collecting cargo vapor at a rate of not less than 1.25 times the facility's maximum liquid transfer rate for cargo for which vapor collection is required plus any inerting, diluting, or enriching gas which may be added to the system, unless the vapor growth for turbulent loading of the most volatile liquid handled by the facility is less than 25 percent.

(b) A facility vapor collection system must maintain the pressure in a vessel's cargo tanks between 80 percent of the highest setting of any of the vessel's vacuum relief valves and 80 percent of the lowest setting of any of the vessel's pressure relief valves for a non-inerted tank vessel, and between 0.2 psig and 80 percent of the lowest setting of any of the vessel's pressure relief valves for an inerted tank vessel. The system must be capable of maintaining the pressure in the vessel's cargo tanks within this range at any cargo transfer rate less than or equal to the maximum transfer rate determined at the pre-transfer conference required by §156.120(w) of this chapter.

(c) The pressure measured at the facility vapor connection must be corrected for pressure drops across the vessel's vapor collection system and the vapor collection hose or arm.

(d) A pressure sensing device must be provided which activates an alarm when the pressure at the facility vapor connection exceeds either the pressure corresponding to the upper pressure determined in paragraph (b) of this section or a lower pressure agreed upon at the pre-transfer conference required by §156.120(w) of this chapter.

(e) A pressure sensing device must be provided which activates an alarm when the pressure at the facility vapor connection falls below either the pressure corresponding to the lower pressure determined in paragraph (b) of this section or a higher pressure agreed upon at the pre-transfer conference required by §156.120(w) of this chapter.

(f) A pressure sensing device must be provided which activates the emergency shutdown system required by §154.550 of this part and closes the remotely operated cargo vapor shutoff valve required by §154.810(a) of this subpart when the pressure at the facility vapor connection exceeds 2.0 psi, or a lower pressure agreed upon at the pre-transfer conference required by §156.120(w) of this chapter. The sensing device must be independent of the device used to activate the alarm required by paragraph (d) of this section.

(g) A pressure sensing device must be provided which closes the remotely operated cargo vapor shutoff valve required by §154.810(a) of this subpart when the vacuum at the facility vapor connection is more than 1.0 psi, or a lesser vacuum set at the pre-transfer conference required by §156.120(w) of this chapter. The sensing device must be independent of the device used to activate the alarm required by paragraph (e) of this section.

(h) The pressure sensing devices required by paragraphs (d) and (f) of this section must be located in the vapor collection line between the facility vapor connection and the manual isolation valve, if required by §154.810(h) of this subpart, unless an interlock is provided which prevents operation of the system when the isolation valve is closed.

(i) A pressure indicating device must be provided which indicates the pressure in the vapor collection line.

(j) If a compressor, blower, or eductor capable of drawing more than 1.0 psi vacuum is used to draw vapor from the vessel, a vacuum relief valve must be installed in the vapor collection line between the compressor, blower, or eductor and the facility vapor connection, which:

(1) Relieves at a pressure such that the pressure in the vapor collection system at the facility vapor connection does not exceed 1.0 psi vacuum;

(2) Has a relieving capacity equal to or greater than the capacity of the compressor, blower, or eductor;

(3) Has a flame screen fitted at the vacuum relief opening; and

(4) Has been tested for relieving capacity in accordance with paragraph 1.5.1.3 of API 2000 (incorporated by reference; *see* §154.106) with a flame screen fitted.

(k) When a facility collects cargo vapor through an undersea pipeline from a vessel moored offshore, the vacuum relief valve may be set at a vacuum greater than 1.0 psi vacuum provided the pressure controls take into account the pressure drop across the vessel's vapor collection system, any vapor collection hoses, and the undersea pipeline as a function of the actual transfer rate.

(l) If the pressure in the vapor collection system can exceed 2.0 psig due to a malfunction in an inerting, enriching, or diluting system a pressure relief valve must:

(1) Be installed between the point where inerting, enriching, or diluting gas is introduced into the vapor collection system and the facility vapor connection;

(2) Relieve at a pressure such that the pressure in the vapor collection system at the facility vapor connection does not exceed 2.0 psig;

(3) Have a relieving capacity equal to or greater than the maximum capacity of the facility inerting, enriching, or diluting gas source;

(4) If not designed to insure a minimum vapor discharge velocity of 30 meters (98.4 ft.) per second, have a flame screen fitted at the discharge opening; and

(5) Have been tested for relieving capacity in accordance with paragraph 1.5.1.3 of API 2000.

(m) The relieving capacity test required by paragraph (l)(5) must be carried out with a flame screen fitted at the discharge opening if the pressure relief valve is not designed to insure a minimum vapor discharge velocity of 30 meters (98.4 ft.) per second.

[CGD 88–102, 55 FR 25429, June 21, 1990, as amended by USCG–1998–3799, 63 FR 35531, June 30, 1998; USCG–2001–8661, 74 FR 45023, Aug. 31, 2009]

§ 154.820 Fire, explosion, and detonation protection.

top

(a) A vapor control system with a single facility vapor connection that receives vapor only from a vessel with inerted cargo tanks and processes vapor with a vapor recovery unit must:

(1) Be capable of inerting the vapor collection line in accordance with §154.824(a) of this subpart prior to receiving vapors from the vessel;

(2) Have at least one oxygen analyzer that samples the vapor concentration continuously at a point not more than 6 meters (19.7 ft.) from the facility vapor connection; and

(3) Meet §154.824 (f)(1), (f)(2), (g), (h)(2), and (h)(3) of this subpart.

(b) A vapor control system with a single facility vapor connection that receives vapor only from a vessel with inerted cargo tanks and processes vapor with a vapor destruction unit must:

(1) Have a detonation arrester located not more than 6 meters (19.7 ft.) from the facility vapor connection; or

(2) Have an inerting system that meets the requirements of §154.824 of this subpart.

(c) A vapor control system with a single facility vapor connection that receives vapor from a vessel with cargo tanks that are not inerted and processes vapor with a vapor recovery unit must:

(1) Have a detonation arrester located not more than 6 meters (19.7 ft.) from the facility vapor connection; or

(2) Have an inerting, enriching, or diluting system that meets the requirements of §154.824 of this subpart.

(d) A vapor control system with a single facility vapor connection that receives vapor from a vessel with cargo tanks that are not inerted and processes the vapor with a vapor destruction unit must:

(1) Have a detonation arrester located not more than 6 meters (19.7 ft.) from the facility vapor connection; and

(2) Have an inerting, enriching, or diluting system that meets the requirements of §154.824 of this subpart.

(e) A vapor control system with multiple facility vapor connections that processes vapor with a vapor recovery unit must have a detonation arrester located not more than 6 meters (19.7 ft.) from each facility vapor connection.

(f) A vapor control system with multiple facility vapor connections that processes vapor with a vapor destruction unit must:

(1) Have a detonation arrester located not more than 6 meters (19.7 ft.) from each facility vapor connection; and

(2) Have an inerting, enriching, or diluting system that meets the requirements of §154.824 of this subpart.

(g) A vapor control system that uses a vapor balancing system in which cargo vapor from a vessel is transferred through the facility vapor collection system to facility storage tanks must:

(1) Have a detonation arrester located not more than 6 meters (19.7 ft.) from each facility vapor connection;

(2) Have a detonation arrester located within the storage tank containment area as close as practical to the vapor return connection of each facility storage tank; and

(3) Have facility storage tank high level alarm systems and facility storage tank overfill control systems arranged to prevent cargo from entering the vapor return line.

(h) Except for a discharge vent from a vapor destruction unit, each outlet of a vapor control system that vents to atmosphere and is not isolated with a pressure-vacuum relief valve must have a flame arrester located at the outlet.

§ 154.822 Detonation arresters, flame arresters, and flame screens.

top

(a) Each detonation arrester required by this part must:

(1) Be capable of arresting a detonation from either side of the device; and

(2) Be acceptable to the Commandant (CG–522). A detonation arrester designed, built, and tested in accordance with appendix A of this part will be acceptable to the Commandant (G-MSO).

(b) Each flame arrester required by this part must be acceptable to the Commandant (CG–522). A flame arrester designed, built, and tested in accordance with appendix B of this part will be acceptable to the Commandant (G-MSO).

(c) Each flame screen required by this part must be either a single screen of corrosion resistant wire of at least 30 by 30 mesh, or two screens, both of corrosion resistant wire, of at least 20 by 20 mesh, spaced not less than 12.7 millimeters (1/2in.) or more than 38.1 millimeters (11/2in.) apart.

[CGD 88–102, 55 FR 25429, June 21, 1990; 55 FR 39270, Sept. 26, 1990, as amended by CGD 96–026, 61 FR 33666, June 28, 1996; USCG–2002–12471, 67 FR 41333, June 18, 2002; USCG–2010–0351, 75 FR 36284, June 25, 2010]

§ 154.824 Inerting, enriching, and diluting systems.

top

(a) A vapor control system which uses inerting, enriching, or diluting gas must be capable of inerting, enriching, or diluting the vapor collection line prior to receiving cargo vapor.

(b) Except as permitted by §154.820(a) of this subpart, a vapor control system which uses an inerting, enriching, or diluting system must be equipped with a gas injection and mixing arrangement located as close as practical but not more than 10 meters (32.8 ft.) from the facility vapor connection that ensures complete mixing of the gases within 20 pipe diameters of the injection point;

(c) A vapor control system that uses an inerting or enriching system may not be operated at a vacuum after the injection point unless:

(1) There are no sleeve-type pipe couplings, vacuum relief valves, or other devices which could allow air into the vapor collection system downstream of the injection point; or

(2) An additional analyzer is used to monitor the downstream vapor concentration and a means is provided to inject additional inerting or enriching gas.

(d) A vapor control system that uses analyzers to control the amount of inerting, enriching, or diluting gas injected into the vapor collection line must be equipped with at least 2 analyzers. The analyzers must be connected so that:

(1) When oxygen analyzers are used, the higher oxygen concentration reading controls the inerting or enriching system and activates the alarm and automatic shutdown system required by paragraph (h), (j) or (k)(2) of this section;

(2) When hydrocarbon analyzers are used, the lower hydrocarbon concentration reading controls the enriching system and activates the alarm and automatic shutdown system required by paragraph (i) or (k)(1) of this section; and

(3) When hydrocarbon analyzers are used, the higher hydrocarbon concentration reading controls the diluting system and activates the alarm and automatic shutdown system required by paragraph (l) of this section.

(e) A vapor control system that uses volumetric measurements to control the amount of inerting, enriching, or diluting gas injected into the vapor collection line must be equipped with at least one analyzer to activate the alarms and automatic shutdown systems required by this section.

(f) Each oxygen or hydrocarbon analyzer required by this section must:

(1) Be installed in accordance with API Recommended Practice 550 (incorporated by reference; *see* §154.106);

(2) Have a response time of not more than 30 seconds from the time the vapor is sampled; and

(3) Sample the vapor concentration continuously not more than 30 pipe diameters from the gas injection point.

(g) Oxygen analyzers which operate at elevated temperatures (*i.e.* , zirconia oxide or thermomagnetic) must not be used.

(h) An inerting system must:

(1) Supply sufficient inert gas to the vapor stream to ensure that the oxygen concentration throughout the vapor collection system is maintained below 8.0 percent by volume;

(2) Activate an alarm when the oxygen concentration in the vapor collection line exceeds 8.0 percent by volume;

(3) Close the remotely operated cargo vapor shutoff valve required by §154.810(a) of this part when the oxygen concentration in the vapor collection line exceeds 9.0 percent by volume; and

(4) If a combustion device is used to produce the inert gas, have a hydraulic seal and non-return valve between the combustion device and the vapor collection line.

(i) An enriching system must:

(1) Supply sufficient compatible hydrocarbon vapor to the vapor stream to ensure that the hydrocarbon concentration throughout the vapor collection system is maintained above 170 percent by volume of the upper flammable limit;

(2) Activate an alarm when the hydrocarbon concentration in the vapor collection line falls below 170 percent by volume of the upper flammable limit; and

(3) Close the remotely operated cargo vapor shutoff valve required by §154.810(a) of this subpart when the hydrocarbon concentration in the vapor collection line falls below 150 percent by volume of the upper flammable limit.

(j) Oxygen analyzers may be used in lieu of hydrocarbon analyzers in an enriching system at a facility that receives cargo vapor only from a vessel with non-inerted cargo tanks, provided that the analyzers:

(1) Activate an alarm when the oxygen concentration in the vapor collection line exceeds 15.5 percent by volume; and

(2) Close the remotely operated cargo vapor shutoff valve required by §154.810(a) of this subpart when the oxygen concentration in the vapor collection line exceeds 16.5 percent by volume.

(k) An enriching system may be used in a vapor collection system that receives cargo vapor from a vessel with inerted cargo tanks if:

(1) Hydrocarbon analyzers are used to comply with paragraph (i)(2) and (i)(3) of this section; or

(2) If oxygen analyzers are used, the analyzers activate an alarm when the oxygen concentration in the vapor collection line exceeds 8 percent by volume, and close the remotely operated cargo vapor shutoff valve required by §154.810(a) of this subpart when the oxygen concentration exceeds 9 percent by volume.

(l) An air dilution system must:

(1) Supply sufficient additional air to the vapor stream to ensure that the hydrocarbon concentration throughout the vapor collection system is maintained below 30 percent by volume of the lower flammable limit;

(2) Activate an alarm when the hydrocarbon concentration in the vapor collection line exceeds 30 percent by volume of the lower flammable limit; and

(3) Close the remotely operated cargo vapor shutoff valve required by §154.810(a) of this subpart when the hydrocarbon concentration in the vapor collection line exceeds 50 percent by volume of the lower flammable limit.

[CGD 88–102, 55 FR 25429, June 21, 1990; 55 FR 39270, Sept. 26, 1990, as amended by USCG–2001–8661, 74 FR 45023, Aug. 31, 2009]

§ 154.826 Vapor compressors and blowers.

top

(a) Each inlet and outlet to a compressor or blower which handles vapor that has not been inerted, enriched, or diluted in accordance with §154.824 of this subpart must be fitted with:

(1) A detonation arrester;

(2) A flame arrester; or

(3) An explosion suppression system acceptable to the Commandant (CG–522).

(b) If a reciprocating or screw-type compressor handles vapor in the vapor collection system, it must be provided with indicators and audible and visible alarms to warn against the following conditions:

(1) Excessive discharge gas temperature at each compressor chamber or cylinder;

(2) Excessive cooling water temperature;

(3) Excessive vibration;

(4) Low lube oil level;

(5) Low lube oil pressure; and

(6) Excessive shaft bearing temperatures.

(c) If a liquid ring-type compressor handles vapor in the vapor collection system, it must be provided with indicators and audible and visible alarms to warn against the following conditions:

(1) Low level of liquid sealing medium;

(2) Lack of flow of liquid sealing medium;

(3) Excessive temperature of the liquid sealing medium;

(4) Low lube oil level;

(5) Low lube oil pressure, if pressurized lubricating system; and

(6) Excessive shaft bearing temperature.

(d) If a centrifugal compressor, fan, or lobe blower handles vapor in the vapor collection system, construction of the blades and/or housing must meet one of the following:

(1) Blades or housing of nonmetallic construction;

(2) Blades and housing of nonferrous material;

(3) Blades and housing of corrosion resistant steel;

(4) Ferrous blades and housing with one-half inch or more design tip clearance; or

(5) Blades of aluminum or magnesium alloy and a ferrous housing with a nonferrous insert sleeve at the periphery of the impeller.

[CGD 88–102, 55 FR 25429, June 21, 1990, as amended by CGD 96–026, 61 FR 33666, June 28, 1996; USCG–2010–0351, 75 FR 36284, June 25, 2010]

§ 154.828 Vapor recovery and vapor destruction units.

top

(a) The inlet to a vapor recovery unit which receives cargo vapor that has not been inerted, enriched, or diluted in accordance with §154.824 of this subpart must be fitted with one of the following:

(1) A detonation arrester;

(2) A flame arrester; or

(3) An explosion suppression system acceptable to the Commandant (CG–522).

(b) The inlet to a vapor destruction unit must:

(1) Have a liquid seal; and

(2) Have two quick-closing stop valves installed in the vapor line.

(c) A vapor destruction unit must:

(1) Not be within 30 meters (98.8 ft.) of any tank vessel berth or mooring at the facility;

(2) Have a flame arrester or detonation arrester fitted in the vapor line; and

(3) Alarm and shut down when a flame is detected on the flame arrester or detonation arrester.

(d) When a vapor destruction unit shuts down or has a flame-out condition the vapor destruction unit control system must:

(1) Close the quick-closing stop valves required by paragraph (b)(2) of this section; and

(2) Close the remotely operated cargo vapor shutoff valve required by §154.810(a) of this subpart.

[CGD 88–102, 55 FR 25429, June 21, 1990, as amended by CGD 96–026, 61 FR 33666, June 28, 1996; USCG–2010–0351, 75 FR 36284, June 25, 2010]

§ 154.840 Personnel training.

top

(a) A person in charge of a transfer operation utilizing a vapor control system must have completed a training program covering the particular system installed at the facility. Training must include drills or demonstrations using the installed vapor control system covering normal operations and emergency procedures.

(b) The training program required by paragraph (a) of this section must cover the following subjects:

(1) Purpose of a vapor control system;

(2) Principles of the vapor control system;

(3) Components of the vapor control system;

(4) Hazards associated with the vapor control system;

(5) Coast Guard regulations in this subpart;

(6) Operating procedures, including:

(i) Testing and inspection requirements,

(ii) Pre-transfer procedures,

(iii) Connection sequence,

(iv) Start-up procedures, and

(v) Normal operations; and

(7) Emergency procedures.

§ 154.850 Operational requirements.

top

(a) A facility must receive vapors only from a vessel which has its certificate of inspection or certificate of

compliance endorsed in accordance with 46 CFR 39.10–13(e).

(b) The following must be performed not more than 24 hours prior to each transfer operation:

(1) All alarms and automatic shutdown systems required by this part must be tested; and

(2) The analyzers required by §154.820(a), §154.824 (d) and (e) of this subpart must be checked for calibration by use of a span gas.

(c) The position of all valves in the vapor line between the vessel's tanks and the facility vapor collection system must be verified prior to the start of the transfer operation.

(d) A tank barge overfill control system that meets the requirements of 46 CFR 39.20–9(b) must not be connected to an overfill sensor circuit that exceeds the system's rated cable length, inductance, and capacitance.

(e) When vapor is being received from a vessel with inerted cargo tanks, the remotely operated cargo vapor shutoff valve required by §154.810(a) of this subpart must not be opened until the pressure at the facility vapor connection exceeds the pressure on the downstream side of the remotely operated cargo vapor shutoff valve.

(f) The initial cargo transfer rate must not exceed the rate agreed upon at the pre-transfer conference required by §156.120(w) of this chapter and 46 CFR 39.30–1(h).

(g) The cargo transfer rate must not exceed the maximum allowable transfer rate as determined by the lesser of the following:

(1) A transfer rate corresponding to the maximum vapor processing rate for the vapor control system, as specified in the facility operations manual required by §154.300 of this chapter; or

(2) The vessel's maximum transfer rate determined in accordance with 46 CFR 39.30–1(d).

(h) While transferring cargo to a vessel connected to a vapor control system, compressed air or gas may be used to clear cargo hoses and loading arms, but must not be used to clear cargo lines.

(i) If one of the two analyzers required by §154.824(d) of this subpart becomes inoperable during a transfer operation, the operation may continue provided the remaining analyzer remains operational; however, no further transfer operations may be started until the inoperable analyzer is replaced or repaired.

(j) Whenever a condition results in a shutdown of the vapor control system, the person in charge shall immediately terminate cargo loading.

(k) If it is suspected that a flare in the vapor control system has had a flare-back, or if a flame is detected on the flame arrester required by §154.828(c)(2) of this subpart, the transfer operation must be stopped and not be restarted until the flame arrester has been inspected and found to be in satisfactory condition.

Subpart F—Response Plans for Oil Facilities

top

Source: CGD 91–036, 61 FR 7917, Feb. 29, 1996, unless otherwise noted.

§ 154.1010 Purpose.

top

This subpart establishes oil spill response plan requirements for all marine transportation-related (MTR) facilities (hereafter also referred to as facilities) that could reasonably be expected to cause substantial harm or significant and substantial harm to the environment by discharing oil into or on the navigable waters, adjoining shorelines, or exclusive economic zone. The development of a response plan prepares the facility owner or operator to respond to an oil spill. These requirements specify criteria to be used during the planning process to determine the appropriate response resources. The specific criteria for response resources and their arrival times are not performance standards. The criteria are based on a

set of assumptions that may not exist during an actual oil spill incident.

§ 154.1015 Applicability.

top

(a) This subpart applies to all MTR facilities that because of their location could reasonably be expected to cause at least substantial harm to the environment by discharging oil into or on the navigable waters, adjoining shorelines, or exclusive economic zone.

(b) The following MTR facilities that handle, store, or transport oil, in bulk, could reasonably be expected to cause substantial harm to the environment by discharging oil into or on the navigable waters or adjoining shorelines and are classified as substantial harm MTR facilities:

(1) Fixed MTR onshore facilities capable of transferring oil to or from a vessel with a capacity of 250 barrels or more and deepwater ports;

(2) Mobile MTR facilities used or intended to be used to transfer oil to or from a vessel with a capacity of 250 barrels or more; and

(3) Those MTR facilities specifically designated as substantial harm facilities by the COTP under §154.1016.

(c) The following MTR facilities that handle, store, or transport oil in bulk could not only reasonably be expected to cause substantial harm, but also significant and substantial harm, to the environment by discharging oil into or on the navigable waters, adjoining shorelines, or exclusive economic zone and are classified as significant and substantial harm MTR facilities:

(1) Deepwater ports, and fixed MTR onshore facilities capable of transferring oil to or from a vessel with a capacity of 250 barrels or more except for facilities that are part of a non-transportation-related fixed onshore facility with a storage capacity of less than 42,000 gallons; and

(2) Those MTR facilities specifically designated as significant and substantial harm facilities by the COTP under §154.1016.

(d) An MTR facility owner or operator who believes the facility is improperly classified may request review and reclassification in accordance with §154.1075.

§ 154.1016 Facility classification by COTP.

top

(a) The COTP may upgrade the classification of:

(1) An MTR facility not specified in §154.1015 (b) or (c) to a facility that could reasonably be expected to cause substantial harm to the environment; or

(2) An MTR facility specified in §154.1015(b) to a facility that could reasonably be expected to cause significant and substantial harm to the environment.

(b) The COTP may downgrade, the classification of:

(1) An MTR facility specified in §154.1015(c) to a facility that could reasonably be expected to cause substantial harm to the environment; or

(2) An MTR facility specified in §154.1015(b) to a facility that could not reasonably be expected to cause substantial, or significant and substantial harm to the environment.

(3) The COTP will consider downgrading an MTR facility's classification only upon receiving a written request for a downgrade of classification from the facility's owner or operator.

(c) When changing a facility classification the COTP may, as appropriate, consider all relevant factors including, but not limited to: Type and quantity of oils handled in bulk; facility spill history; age of facility; proximity to public and commercial water supply intakes; proximity to navigable waters based on the definition of navigable waters in 33 CFR 2.36; and proximity to fish and wildlife and sensitive

environments.

[CGD 91–036, 61 FR 7917, Feb. 29, 1996, as amended by USCG–2008–0179, 73 FR 35014, June 19, 2008]

§ 154.1017 Response plan submission requirements.

top

(a) The owner or operator of an MTR facility identified only in §154.1015(b), or designated by the COTP as a substantial harm facility, shall prepare and submit to the cognizant COTP a response plan that meets the requirements of §§154.1030, 154.1040, 154.1045, or §154.1047, as appropriate. This applies to:

(1) A mobile MTR facility used or intended to be used to transfer oil to or from a vessel with a capacity of 250 barrels or more; and

(2) A fixed MTR facility specifically designated as a substantial harm facility by the COTP under §154.1016.

(b) The owner or operator of an MTR facility identified in §154.1015(c) or designated by the COTP as a significant and substantial harm facility shall prepare and submit for review and approval of the cognizant COTP a response plan that meets the requirements of §§154.1030, 154.1035, 154.1045, or 154.1047, as appropriate. This applies to:

(1) A fixed MTR facility capable of transferring oil, in bulk, to or from a vessel with a capacity of 250 barrels or more; and

(2) An MTR facility specifically designated as a significant and substantial harm facility by the COTP under §154.1016.

(c) In addition to the requirements in paragraphs (a) and (b) of this section, the response plan for a mobile MTR facility must meet the requirements of §154.1041 subpart F.

§ 154.1020 Definitions.

top

Except as otherwise defined in this section, the definition in 33 CFR 154.105 apply to this subpart and subparts H and I.

Adverse weather means the weather conditions that will be considered when identifying response systems and equipment in a response plan for the applicable operating environment. Factors to consider include, but are not limited to, significant wave height as specified in §§154.1045, 154.1047, 154.1225, or 154.1325, as appropriate; ice conditions, temperatures, weather-related visibility, and currents within the COTP zone in which the systems or equipment are intended to function.

Animal fat means a non-petroleum oil, fat, or grease derived from animals, and not specifically identified elsewhere in this part.

Average most probable discharge means a discharge of the lesser of 50 barrels or 1 percent of the volume of the worst case discharge.

Captain of the Port (COTP) Zone means a zone specified in 33 CFR part 3 and, where applicable, the seaward extension of that zone to the outer boundary of the exclusive economic zone (EEZ).

Complex means a facility possessing a combination of marine-transportation related and non-transportation-related components that is subject to the jurisdiction of more than one Federal agency under section 311(j) of the Clean Water Act.

Dispersant-application platform means the vessel or aircraft outfitted with the dispersant-application equipment acting as the delivery system for the dispersant onto the oil spill.

Dispersant Mission Planner 2 or (DMP2) means an Internet-downloadable application that estimates EDAC for different dispersant response systems. The NSFCC will use DPMP2 for evaluating OSRO

dispersant classification levels.

Effective Daily Application Capacity or *EDAC* means the estimated amount of dispersant that can be applied to a discharge by an application system given the availability of supporting dispersant stockpiles, when operated in accordance with approved standards and within acceptable environmental conditions.

Exclusive economic zone (EEZ) means the zone contiguous to the territorial sea of the United States extending to a distance up to 200 nautical miles from the baseline from which the breadth of the territorial sea is measured.

Facility that could reasonably be expected to cause significant and substantial harm means any MTR facility (including piping and any structures that are used for the transfer of oil between a vessel and a facility) classified as a “significant and substantial harm” facility under §154.1015(c) and §154.1216.

Facility that could reasonably be expected to cause substantial harm means any MTR facility classified as a “substantial harm” facility under §154.1015(b) and §154.1216.

Fish and Wildlife and Sensitive Environment means areas that may be identified by either their legal designation or by Area Committees in the applicable Area Contingency Plan (ACP) (for planning) or by members of the Federal On-Scene Coordinator's spill response structure (during responses). These areas may include: Wetlands, national and state parks, critical habitats for endangered or threatened species, wilderness and natural resource areas, marine sanctuaries and estuarine reserves, conservation areas, preserves, wildlife areas, wildlife refuges, wild and scenic rivers, areas of economic importance, recreational areas, national forests, Federal and state lands that are research areas, heritage program areas, land trust areas, and historical and archaeological sites and parks. These areas may also include unique habitats such as: aquaculture sites and agricultural surface water intakes, bird nesting areas, critical biological resource areas, designated migratory routes, and designated seasonal habitats.

Great Lakes means Lakes Superior, Michigan, Huron, Erie, and Ontario, their connecting and tributary waters, the Saint Lawrence River as far as Saint Regis, and adjacent port areas.

Gulf Coast means, for the purposes of dispersant-application requirements, the region encompassing the following Captain of the Port Zones:

(1) Corpus Christi, TX.

(2) Houston/Galveston, TX.

(3) Port Arthur, TX.

(4) Morgan City, LA.

(5) New Orleans, LA.

(6) Mobile, AL.

(7) St. Petersburg, FL.

Higher volume port area means the following ports:

(1) Boston, MA.

(2) New York, NY.

(3) Delaware Bay and River to Philadelphia, PA.

(4) St. Croix, VI.

(5) Pascagoula, MS.

(6) Mississippi River from Southwest Pass, LA. to Baton Rouge, LA.

(7) Louisiana Offshore Oil Port (LOOP), LA.

(8) Lake Charles, LA.

(9) Sabine-Neches River, TX.

(10) Galveston Bay and Houston Ship Channel, TX.

(11) Corpus Christi, TX.

(12) Los Angeles/Long Beach harbor, CA.

(13) San Francisco Bay, San Pablo Bay, Carquinez Strait, and Suisun Bay to Antioch, CA.

(14) Straits of Juan De Fuca from Port Angeles, WA, to and including Puget Sound, WA.

(15) Prince William Sound, AK.

Inland area means the area shoreward of the boundary lines defined in 46 CFR part 7, except in the Gulf of Mexico. In the Gulf of Mexico, it means the area shoreward of the lines of demarcation (COLREG lines) defined in §§80.740 through 80.850 of this chapter. The inland area does not include the Great Lakes.

Marine transportation-related facility (MTR facility) means any onshore facility or segment of a complex regulated under section 311(j) of the Federal Water Pollution Control Act (FWPCA) by two or more Federal agencies, including piping and any structure used or intended to be used to transfer oil to or from a vessel, subject to regulation under this part and any deepwater port subject to regulation under part 150 of this chapter. For a facility or segment of a complex regulated by two or more Federal agencies under section 311(j) of the FWPCA, the MTR portion of the complex extends from the facility oil transfer system's connection with the vessel to the first valve inside the secondary containment surrounding tanks in the non-transportation-related portion of the facility or, in the absence of secondary containment, to the valve or manifold adjacent to the tanks comprising the non-transportation-related portion of the facility, unless another location has otherwise been agreed to by the COTP and the appropriate Federal official.

Maximum extent practicable means the planned capability to respond to a worst case discharge in adverse weather, as contained in a response plan that meets the criteria in this subpart or in a specific plan approved by the cognizant COTP.

Maximum most probable discharge means a discharge of the lesser of 1,200 barrels or 10 percent of the volume of a worst case discharge.

Nearshore area means the area extending seaward 12 miles from the boundary lines defined in 46 CFR part 7, except in the Gulf of Mexico. In the Gulf of Mexico, it means the area extending seaward 12 miles from the line of demarcation (COLREG lines) defined in §§80.740–80.850 of this chapter.

Non-persistent or Group I oil means a petroleum-based oil that, at the time of shipment, consists of hydrocarbon fractions—

(1) At least 50 percent of which by volume, distill at a temperature of 340 degrees C (645 degrees F); and

(2) At least 95 percent of which by volume, distill at a temperature of 370 degrees C (700 degrees F).

Ocean means the offshore area and nearshore area as defined in this subpart.

Offshore area means the area beyond 12 nautical miles measured from the boundary lines defined in 46 CFR part 7 extending seaward to 50 nautical miles, except in the Gulf of Mexico. In the Gulf of Mexico, it is the area beyond 12 nautical miles of the line of demarcation (COLREG lines) defined in §§80.740–80.850 of this chapter extending seaward to 50 nautical miles.

Oil means oil of any kind or in any form, including, but not limited to, petroleum, fuel oil, sludge, oil refuse, oil mixed with wastes other than dredge spoil.

Oil spill removal organization (OSRO) means an entity that provides response resources.

On-Scene Coordinator (OSC) means the definition in the National Oil and Hazardous Substances Pollution Contingency Plan (40 CFR part 300).

Operating area means Rivers and Canals, Inland, Nearshore, Great Lakes, or Offshore geographic location(s) in which a facility is handling, storing, or transporting oil.

Operating environment means Rivers and Canals, Inland, Great Lakes, or Ocean. These terms are used to define the conditions in which response equipment is designed to function.

Operating in compliance with the plan means operating in compliance with the provisions of this subpart including, ensuring the availability of the response resources by contract or other approved means, and conducting the necessary training and drills.

Operational effectiveness monitoring means monitoring concerned primarily with determining whether the dispersant was properly applied and how the dispersant is affecting the oil.

Other non-petroleum oil means a non-petroleum oil of any kind that is not generally an animal fat or vegetable oil.

Persistent oil means a petroleum-based oil that does not meet the distillation criteria for a non-persistent oil. For the purposes of this subpart, persistent oils are further classified based on specific gravity as follows:

(1) Group II—specific gravity of less than .85.

(2) Group III—specific gravity equal to or greater than .85 and less than .95.

(3) Group IV—specific gravity equal to or greater than .95 and less than or equal to 1.0.

(4) Group V—specific gravity greater than 1.0.

Pre-authorization for dispersant use means an agreement, adopted by a regional response team in coordination with area committees, which authorizes the use of dispersants at the discretion of the Federal On-Scene Coordinator without the further approval of other Federal or State authorities. These pre-authorization areas are generally limited to particular geographic areas within each region.

Primary dispersant staging site means a site designated within a Captain of the Port zone that has been identified as a forward staging area for dispersant application platforms and the loading of dispersant stockpiles. Primary staging sites are typically the planned locations where platforms load or reload dispersants before departing for application at the site of the discharge and may not be the locations where dispersant stockpiles are stored or application platforms are home-based.

Qualified individual and alternate qualified individual means a person located in the United States who meets the requirements of §154.1026.

Response activities means the containment and removal of oil from the land, water, and shorelines, the temporary storage and disposal of recovered oil, or the taking of other actions as necessary to minimize or mitigate damage to the public health or welfare or the environment.

Response resources means the personnel, equipment, supplies, and other capability necessary to perform the response activities identified in a response plan.

Rivers and canals means a body of water confined within the inland area, including the Intracoastal Waterways and other waterways artificially created for navigation, that has a project depth of 12 feet or less.

Specific gravity means the ratio of the mass of a given volume of liquid at 15 °C (60 °F) to the mass of an equal volume of pure water at the same temperature.

Spill management team means the personnel identified to staff the organizational structure identified in a response plan to manage response plan implementation.

Substantial threat of a discharge means any incident or condition involving a facility that may create a risk of discharge of oil. Such incidents include, but are not limited to storage tank or piping failures, above ground or underground leaks, fires, explosions, flooding, spills contained within the facility, or other similar occurrences.

Tier means the combination of required response resources and the times within which the resources must arrive on scene.

[Note: Tiers are applied in three categories:

(1) Higher Volume Port Areas,

(2) Great Lakes, and

(3) All other operating environments, including rivers and canals, inland, nearshore, and offshore areas.

Appendix C, Table 4 of this part, provides specific guidance on calculating response resources. Sections 154.1045(f) and 154.1135, set forth the required times within which the response resources must arrive on-scene.]

Vegetable oil means a non-petroleum oil or fat derived from plant seeds, nuts, kernels or fruits, and not specifically identified elsewhere in this part.

Worst case discharge means in the case of an onshore facility and deepwater port, the largest foreseeable discharge in adverse weather conditions meeting the requirements of §154.1029.

[CGD 91–036, 61 FR 7917, Feb. 29, 1996, as amended by USCG–1999–5149, 65 FR 40825, June 30, 2000; USCG–2001–8661, 74 FR 45023, Aug. 31, 2009]

§ 154.1025 Operating restrictions and interim operating authorization.

top

(a) The owner or operator of an MTR facility who submitted a response plan prior to May 29, 1996, may elect to comply with any of the provisions of this final rule by revising the appropriate section of the previously submitted plan in accordance with §154.1065. An owner or operator of an MTR facility who elects to comply with all sections of this final rule must resubmit the plan in accordance with §154.1060 of this part.

(b) No facility subject to this subpart may handle, store, or transport oil unless it is operating in full compliance with a submitted response plan. No facility categorized under §154.1015(c) as a significant and substantial harm facility may handle, store, or transport oil unless the submitted response plan has been approved by the COTP. The owner or operator of each new facility to which this subpart applies must submit a response plan meeting the requirements listed in §154.1017 not less than 60 days prior to handling, storing, or transporting oil. Where applicable, the response plan shall be submitted along with the letter of intent required under §154.110.

(c) Notwithstanding the requirements of paragraph (b) of this section, a facility categorized under §154.1015(c) as a significant and substantial harm facility may continue to handle, store, or transport oil for 2 years after the date of submission of a response plan, pending approval of that plan. To continue to handle, store, or transport oil without a plan approved by the COTP, the facility owner or operator shall certify in writing to the COTP that the owner or operator has ensured, by contract or other approved means as described in §154.1028(a), the availability of the necessary private personnel and equipment to respond, to the maximum extend practicable to a worst case discharge or substantial threat of such a discharge from the facility. Provided that the COTP is satisfied with the certification of response resources provided by the owner or operator of the facility, the COTP will provide written authorization for the facility to handle, store, or transport oil while the submitted response plan is being reviewed. Pending approval of the submitted response plan, deficiencies noted by the COTP must be corrected in accordance with §154.1070.

(d) A facility may not continue to handle, store, or transport oil if—

(1) The COTP determines that the response resources identified in the facility certification statement or reference response plan do not substantially meet the requirements of this subpart;

(2) The contracts or agreements cited in the facility's certification statement or referenced response plans are no longer valid;

(3) The facility is not operating in compliance with the submitted plan;

(4) The response plan has not been resubmitted or approved within the last 5 years; or

(5) The period of the authorization under paragraph (c) of this section has expired.

§ 154.1026 Qualified individual and alternate qualified individual.

top

(a) The response plan must identify a qualified individual and at least one alternate who meet the requirements of this section. The qualified individual or alternate must be available on a 24-hour basis and be able to arrive at the facility in a reasonable time.

(b) The qualified individual and alternate must:

(1) Be located in the United States;

(2) Speak fluent English;

(3) Be familiar with the implementation of the facility response plan; and

(4) Be trained in the responsibilities of the qualified individual under the response plan.

(c) The owner or operator shall provide each qualified individual and alternate qualified individual identified in the plan with a document designating them as a qualified individual and specifying their full authority to:

(1) Activate and engage in contracting with oil spill removal organization(s);

(2) Act as a liaison with the predesignated Federal On-Scene Coordinator (OSC); and

(3) Obligate funds required to carry out response activities.

(d) The owner or operator of a facility may designate an organization to fulfill the role of the qualified individual and the alternate qualified individual. The organization must then identify a qualified individual and at least one alternate qualified individual who meet the requirements of this section. The facility owner or operator is required to list in the response plan the organization, the person identified as the qualified individual, and the person or person(s) identified as the alternate qualified individual(s).

(e) The qualified individual is not responsible for—

(1) The adequacy of response plans prepared by the owner or operator; or

(2) Contracting or obligating funds for response resources beyond the authority contained in their designation from the owner or operator of the facility.

(f) The liability of a qualified individual is considered to be in accordance with the provisions of 33 USC 1321(c)(4).

§ 154.1028 Methods of ensuring the availability of response resources by contract or other approved means.

top

(a) When required in this subpart, the availability of response resources must be ensured by the following methods:

(1) A written contractual agreement with an oil spill removal organization. The agreement must identify and ensure the availability of specified personnel and equipment required under this subpart within stipulated response times in the specified geographic areas;

(2) Certification by the facility owner or operator that specified personnel and equipment required under this subpart are owned, operated, or under the direct control of the facility owner or operator, and are available within stipulated response times in the specified geographic areas;

(3) Active membership in a local or regional oil spill removal organization that has identified specified personnel and equipment required under this subpart that are available to respond to a discharge within stipulated response times in the specified geographic areas;

(4) A document which—

(i) Identifies the personnel, equipment, and services capable of being provided by the oil spill removal organization within stipulated response times in the specified geographic areas;

(ii) Sets out the parties' acknowledgment that the oil spill removal organization intends to commit the resources in the event of a response;

(iii) Permits the Coast Guard to verify the availability of the identified response resources through tests, inspections, and drills; and

(iv) Is referenced in the response plan; or

(5) The identification of an oil spill removal organization with specified equipment and personnel available within stipulated response times in specified geographic areas. The organization must provide written consent to being identified in the plan.

(b) The contracts and documents required in paragraph (a) of this section must be retained at the facility and must be produced for review upon request by the COTP.

§ 154.1029 Worst case discharge.

top

(a) The response plan must use the appropriate criteria in this section to develop the worst case discharge.

(b) For the MTR segment of a facility, not less than—

(1) Where applicable, the loss of the entire capacity of all in-line and break out tank(s) needed for the continuous operation of the pipelines used for the purposes of handling or transporting oil, in bulk, to or from a vessel regardless of the presence of secondary containment; plus

(2) The discharge from all piping carrying oil between the marine transfer manifold and the non-transportation-related portion of the facility. The discharge from each pipe is calculated as follows: The maximum time to discover the release from the pipe in hours, plus the maximum time to shut down flow from the pipe in hours (based on historic discharge data or the best estimate in the absence of historic discharge data for the facility) multiplied by the maximum flow rate expressed in barrels per hour (based on the maximum relief valve setting or maximum system pressure when relief valves are not provided) plus the total line drainage volume expressed in barrels for the pipe between the marine manifold and the non-transportation-related portion of the facility; and

(c) For a mobile facility it means the loss of the entire contents of the container in which the oil is stored or transported.

§ 154.1030 General response plan contents.

top

(a) The plan must be written in English.

(b) A response plan must be divided into the sections listed in this paragraph and formatted in the order specified herein unless noted otherwise. It must also have some easily found marker identifying each section listed below. The following are the sections and subsections of a facility response plan:

(1) Introduction and plan contents.

(2) Emergency response action plan:

(i) Notification procedures.

(ii) Facility's spill mitigation procedures.

(iii) Facility's response activities.

(iv) Fish and wildlife and sensitive environments.

(v) Disposal plan.

(3) Training and Exercises:

(i) Training procedures.

(ii) Exercise procedures.

(4) Plan review and update procedures.

(5) Appendices.

(i) Facility-specific information.

(ii) List of contacts.

(iii) Equipment lists and records.

(iv) Communications plan.

(v) Site-specific safety and health plan.

(vi) List of acronyms and definitions.

(vii) A geographic-specific appendix for each zone in which a mobile facility operates.

(c) The required contents for each section and subsection of the plan are contained in §§154.1035, 154.1040, and 154.1041, as appropriate.

(d) The sections and subsections of response plans submitted to the COTP must contain at a minimum all the information required in §§154.1035, 154.1040, and 154.1041, as appropriate. It may contain other appropriate sections, subsections, or information that are required by other Federal, State, and local agencies.

(e) For initial and subsequent submission, a plan that does not follow the format specified in paragraph (b) of this section must be supplemented with a detailed cross-reference section to identify the location of the applicable sections required by this subpart.

(f) The information contained in a response plan must be consistent with the National Oil and Hazardous Substances Pollution Contingency Plan (NCP) (40 CFR part 300) and the Area Contingency Plan(s) (ACP) covering the area in which the facility operates. Facility owners or operators shall ensure that their response plans are in accordance with the ACP in effect 6 months prior to initial plan submission or the annual plan review required under §154.1065(a). Facility owners or operators are not required to, but may at their option, conform to an ACP which is less than 6 months old at the time of plan submission.

§ 154.1035 Specific requirements for facilities that could reasonably be expected to cause significant and substantial harm to the environment.

top

(a) *Introduction and plan content.* This section of the plan must include facility and plan information as follows:

(1) The facility's name, street address, city, county, state, ZIP code, facility telephone number, and telefacsimile number, if so equipped. Include mailing address if different from street address.

(2) The facility's location described in a manner that could aid both a reviewer and a responder in locating the specific facility covered by the plan, such as, river mile or location from a known landmark that would appear on a map or chart.

(3) The name, address, and procedures for contacting the facility's owner or operator on a 24-hour basis.

(4) A table of contents.

(5) During the period that the submitted plan does not have to conform to the format contained in this subpart, a cross index, if appropriate.

(6) A record of change(s) to record information on plan updates.

(b) *Emergency Response Action Plan.* This section of the plan must be organized in the subsections described in this paragraph:

(1) *Notification procedures.* (i) This subsection must contain a prioritized list identifying the person(s), including name, telephone number, and their role in the plan, to be notified of a discharge or substantial threat of a discharge of oil. The telephone number need not be provided if it is listed separately in the list of contacts required in the plan. This Notification Procedures listing must include—

(A) Facility response personnel, the spill management team, oil spill removal organizations, and the qualified individual(s) and the designated alternate(s); and

(B) Federal, State, or local agencies, as required.

(ii) This subsection must include a form, such as that depicted in Figure 1, which contains information to be provided in the initial and follow-up notifications to Federal, State, and local agencies. The form shall include notification of the National Response Center as required in part 153 of this chapter. Copies of the form also must be placed at the location(s) from which notification may be made. The initial notification form must include space for the information contained in Figure 1. The form must contain a prominent statement that initial notification must not be delayed pending collection of all information.

Figure 1—Information on discharge*

[Involved Parties]

(A) Reporting party	(B) Suspected responsible party
Name	Name
Phones () –	Phones () –
Company	Company
Position	Organization Type:
Address	Private citizen
Address	Private enterprise
	Public utility
	Local government
	State government
	Federal government
City	City
State	State
Zip	Zip

*It is not necessary to wait for all information before calling NRC. National Response Center—1–800–424–8802 or direct telephone: 202–267–2675.

Were materials Discharged (Y/N)?
Calling for Responsible Party (Y/N)
Incident Description
Source and/or Cause of Incident
Date - - Time:
Cause
Incident Address/Location Nearest City
Distance from City
Storage Tank Container Type—Above ground (Y/N) Below ground (Y/N) Unknown

Facility Capacity
Tank Capacity
Latitude Degrees
Longitude Degrees
Mile Post or River Mile
Materials
Discharge Unit of Quantity Measure Discharged Material Quantity in Water
Response Action
Actions Taken to Correct or Mitigate Incident
Impact
Number of Injuries Number of Fatalities
Were there Evacuations (Y/N/U)? Number Evacuated
Was there any Damage (Y/N/U)? Damage in Dollars
Additional Information
Any information about the Incident not recorded elsewhere in the report
Caller Notifications
USCG EPA State Other

(2) *Facility's spill mitigation procedures.* (i) This subsection must describe the volume(s) and oil groups that would be involved in the—

(A) Average most probable discharge from the MTR facility;

(B) Maximum most probable discharge from the MTR facility;

(C) Worst case discharge from the MTR facility; and

(D) Where applicable, the worst case discharge from the non-transportation-related facility. This must be the same volume provided in the response plan for the non-transportation-related facility.

(ii) This subsection must contain prioritized procedures for facility personnel to mitigate or prevent any discharge or substantial threat of a discharge of oil resulting from operational activities associated with internal or external facility transfers including specific procedures to shut down affected operations. Facility personnel responsible for performing specified procedures to mitigate or prevent any discharge or potential discharge shall be identified by job title. A copy of these procedures shall be maintained at the facility operations center. These procedures must address actions to be taken by facility personnel in the event of a discharge, potential discharge, or emergency involving the following equipment and scenarios:

(A) Failure of manifold, mechanical loading arm, other transfer equipment, or hoses, as appropriate;

(B) Tank overfill;

(C) Tank failure;

(D) Piping rupture;

(E) Piping leak, both under pressure and not under pressure, if applicable;

(F) Explosion or fire; and

(G) Equipment failure (e.g. pumping system failure, relief valve failure, or other general equipment relevant to operational activities associated with internal or external facility transfers.)

(iii) This subsection must contain a listing of equipment and the responsibilities of facility personnel to mitigate an average most probable discharge.

(3) *Facility's response activities.* (i) This subsection must contain a description of the facility personnel's

responsibilities to initiate a response and supervise response resources pending the arrival of the qualified individual.

(ii) This subsection must contain a description of the responsibilities and authority of the qualified individual and alternate as required in §154.1026.

(iii) This subsection must describe the organizational structure that will be used to manage the response actions. This structure must include the following functional areas.

(A) Command and control;

(B) Public information;

(C) Safety;

(D) Liaison with government agencies;

(E) Spill Operations;

(F) Planning;

(G) Logistics support; and

(H) Finance.

(iv) This subsection of the plan must identify the oil spill removal organizations and the spill management team that will be capable of providing the following resources:

(A) Equipment and supplies to meet the requirements of §§154.1045, 154.1047, or subparts H or I of this part, as appropriate.

(B) Trained personnel necessary to continue operation of the equipment and staff the oil spill removal organization and spill management team for the first 7 days of the response.

(v) This section must include job descriptions for each spill management team member within the organizational structure described in paragraph (b)(3)(iii) of this section. These job descriptions must include the responsibilities and duties of each spill management team member in a response action.

(vi) For facilities that handle, store, or transport group II through group IV petroleum oils, and that operate in waters where dispersant use is pre-authorized, this subsection of the plan must also separately list the resource providers and specific resources, including appropriately trained dispersant-application personnel, necessary to provide the dispersant capabilities required in this subpart. All resource providers and resources must be available by contract or other approved means as described in §154.1028(a). The dispersant resources to be listed within this section must include the following:

(A) Identification of each primary dispersant staging site to be used by each dispersant-application platform to meet the requirements of this subpart.

(B) Identification of the platform type, resource-providing organization, location, and dispersant payload for each dispersant-application platform identified. Location data must identify the distance between the platform's home base and the identified primary dispersant staging site for this section.

(C) For each unit of dispersant stockpile required to support the effective daily application capacity (EDAC) of each dispersant-application platform necessary to sustain each intended response tier of operation, identify the dispersant product resource provider, location, and volume. Location data must include the stockpile's distance to the primary staging sites where the stockpile would be loaded onto the corresponding platforms.

(D) If an oil spill removal organization has been evaluated by the Coast Guard, and its capability is equal to or exceeds the response capability needed by the owner or operator, the section may identify only the oil spill removal organization, and not the information required in paragraphs (b)(3)(vi)(A) through (b)(3)(vi)(C) of this section.

(vii) This subsection of the plan must also separately list the resource providers and specific resources necessary to provide aerial oil tracking capabilities required in this subpart. The oil tracking resources to be listed within this section must include the following:

(A) The identification of a resource provider; and

(B) Type and location of aerial surveillance aircraft that are ensured available, through contract or other approved means, to meet the oil tracking requirements of §154.1045(j).

(viii) For mobile facilities that operate in more than one COTP zone, the plan must identify the oil spill removal organization and the spill management team in the applicable geographic-specific appendix. The oil spill removal organization(s) and the spill management team discussed in paragraph (b)(3)(iv) of this section must be included for each COTP zone in which the facility will handle, store, or transport oil in bulk.

(ix) For mobile facilities that operate in more than one COTP zone, the plan must identify the oil spill removal organization and the spill management team in the applicable geographic-specific appendix. The oil spill removal organization(s) and the spill management team discussed in paragraph (b)(3)(iv)(A) of this section must be included for each COTP zone in which the facility will handle, store, or transport oil in bulk.

(4) *Fish and wildlife and sensitive environments.* (i) This section of the plan must identify areas of economic importance and environmental sensitivity, as identified in the ACP, which are potentially impacted by a worst case discharge. ACPs are required under section 311(j)(4) of the FWPCA to identify fish and wildlife and sensitive environments. The applicable ACP shall be used to designate fish and wildlife and sensitive environments in the plan. Changes to the ACP regarding fish and wildlife and sensitive environments shall be included in the annual update of the response plan, when available.

(ii) For a worst case discharge from the facility, this section of the plan must—

(A) List all fish and wildlife and sensitive environments identified in the ACP which are potentially impacted by a discharge of persistent oils, non-persistent oils, or non-petroleum oils.

(B) Describe all the response actions that the facility anticipates taking to protect these fish and wildlife and sensitive environments.

(C) Contain a map or chart showing the location of those fish and wildlife and sensitive environments which are potentially impacted. The map or chart shall also depict each response action that the facility anticipates taking to protect these areas. A legend of activities must be included on the map page.

(iii) For a worst case discharge, this section must identify appropriate equipment and required personnel, available by contract or other approved means as described in §154.1028, to protect fish and wildlife and sensitive environments which fall within the distances calculated using the methods outlined in this paragraph as follows:

(A) Identify the appropriate equipment and required personnel to protect all fish and wildlife and sensitive environments in the ACP for the distances, as calculated in paragraph (b)(4)(iii)(B) of this section, that the persistent oils, non-persistent oils, or non-petroleum oils are likely to travel in the noted geographic area(s) and number of days listed in table 2 of appendix C of this part;

(B) Calculate the distances required by paragraph (b)(4)(iii)(A) of this section by selecting one of the methods described in this paragraph;

(*1*) Distances may be calculated as follows:

(*i*) For persistent oils and non-petroleum oils discharged into non-tidal waters, the distance from the facility reached in 48 hours at maximum current.

(*ii*) For persistent and non-petroleum oils discharged into tidal waters, 15 miles from the facility down current during ebb tide and to the point of maximum tidal influence or 15 miles, whichever is less, during flood tide.

(*iii*) For non-persistent oils discharged into non-tidal waters, the distance from the facility reached in 24 hours at maximum current.

(*iv*) For non-persistent oils discharged into tidal waters, 5 miles from the facility down current during ebb tide and to the point of maximum tidal influence or 5 miles, whichever is less, during flood tide.

(*2*) A spill trajectory or model may be substituted for the distances calculated under paragraph (b)(4)(iii)(B)(*I) of this section.* The spill trajectory or model must be acceptable to the COTP.

(*3*) The procedures contained in the Environmental Protection's Agency's regulations on oil pollution

prevention for non-transportation-related onshore facilities at 40 CFR part 112, appendix C, Attachment C-III may be substituted for the distances listed in non-tidal and tidal waters; and

(C) Based on historical information or a spill trajectory or model, the COTP may require the additional fish and wildlife and sensitive environments also be protected.

(5) *Disposal Plan.* This subsection must describe any actions to be taken or procedures to be used to ensure that all recovered oil and oil contaminated debris produced as a result of any discharge are disposed according to Federal, state, or local requirements.

(c) *Training and exercises.* This section must be divided into the following two subsections:

(1) *Training procedures.* This subsection must describe the training procedures and programs of the facility owner or operator to meet the requirements in §154.1050.

(2) *Exercise procedures.* This subsection must describe the exercise program to be carried out by the facility owner or operator to meet the requirements in §154.1055.

(d) *Plan review and update procedures.* This section must address the procedures to be followed by the facility owner or operator to meet the requirements of §154.1065 and the procedures to be followed for any post-discharge review of the plan to evaluate and validate its effectiveness.

(e) *Appendices.* This section of the response plan must include the appendices described in this paragraph.

(1) *Facility-specific information.* This appendix must contain a description of the facility's principal characteristics.

(i) There must be a physical description of the facility including a plan of the facility showing the mooring areas, transfer locations, control stations, locations of safety equipment, and the location and capacities of all piping and storage tanks.

(ii) The appendix must identify the sizes, types, and number of vessels that the facility can transfer oil to or from simultaneously.

(iii) The appendix must identify the first valve(s) on facility piping separating the transportation-related portion of the facility from the non-transportation-related portion of the facility, if any. For piping leading to a manifold located on a dock serving tank vessels, this valve is the first valve inside the secondary containment required by 40 CFR part 112.

(iv) The appendix must contain information on the oil(s) and hazardous material handled, stored, or transported at the facility in bulk. A material safety data sheet meeting the requirements of 29 CFR 1910.1200, 33 CFR 154.310(a)(5) or an equivalent will meet this requirement. This information can be maintained separately providing it is readily available and the appendix identifies its location. This information must include—

(A) The generic or chemical name;

(B) A description of the appearance and odor;

(C) The physical and chemical characteristics;

(D) The hazards involved in handling the oil(s) and hazardous materials. This shall include hazards likely to be encountered if the oil(s) and hazardous materials come in contact as a result of a discharge; and

(E) A list of firefighting procedures and extinguishing agents effective with fires involving the oil(s) and hazardous materials.

(v) The appendix may contain any other information which the facility owner or operator determines to be pertinent to an oil spill response.

(2) *List of contacts.* This appendix must include information on 24-hour contact of key individuals and organizations. If more appropriate, this information may be specified in a geographic-specific appendix. The list must include—

(i) The primary and alternate qualified individual(s) for the facility;

(ii) The contact(s) identified under paragraph (b)(3)(iv) of this section for activation of the response resources; and

(iii) Appropriate Federal, State, and local officials.

(3) *Equipment list and records.* This appendix must include the information specified in this paragraph.

(i) The appendix must contain a list of equipment and facility personnel required to respond to an average most probable discharge, as defined in §154.1020. The appendix must also list the location of the equipment.

(ii) The appendix must contain a detailed listing of all the major equipment identified in the plan as belonging to an oil spill removal organization(s) that is available, by contract or other approved means as described in §154.1028(a), to respond to a maximum most probable or worst case discharge, as defined in §154.1020. The detailed listing of all major equipment may be located in a separate document referenced by the plan. Either the appendix or the separate document referenced in the plan must provide the location of the major response equipment.

(iii) It is not necessary to list response equipment from oil spill removal organization(s) when the organization has been classified by the Coast Guard and their capacity has been determined to equal or exceed the response capability needed by the facility. For oil spill removal organization(s) classified by the Coast Guard, the classification must be noted in this section of the plan. When it is necessary for the appendix to contain a listing of response equipment, it shall include all of the following items that are identified in the response plan: Skimmers; booms; dispersant application, in-situ burning, bioremediation equipment and supplies, and other equipment used to apply other chemical agents on the NCP Product Schedule (if applicable); communications, firefighting, and beach cleaning equipment; boats and motors; disposal and storage equipment; and heavy equipment. The list must include for each piece of equipment—

(A) The type, make, model, and year of manufacture listed on the nameplate of the equipment;

(B) For oil recovery devices, the effective daily recovery rate, as determined using section 6 of appendix C of this part;

(C) For containment boom, the overall boom height (draft and freeboard) and type of end connectors;

(D) The spill scenario in which the equipment will be used for or which it is contracted;

(E) The total daily capacity for storage and disposal of recovered oil;

(F) For communication equipment, the type and amount of equipment intended for use during response activities. Where applicable, the primary and secondary radio frequencies must be specified.

(G) Location of the equipment; and

(H) The date of the last inspection by the oil spill removal organization(s).

(4) *Communications plan.* This appendix must describe the primary and alternate method of communication during discharges, including communications at the facility and at remote locations within the areas covered by the response plan. The appendix may refer to additional communications packages provided by the oil spill removal organization. This may reference another existing plan or document.

(5) *Site-specific safety and health plan.* This appendix must describe the safety and health plan to be implemented for any response location(s). It must provide as much detailed information as is practicable in advance of an actual discharge. This appendix may reference another existing plan requiring under 29 CFR 1910.120.

(6) *List of acronyms and definitions.* This appendix must list all acronyms used in the response plan including any terms or acronyms used by Federal, State, or local governments and any operational terms commonly used at the facility. This appendix must include all definitions that are critical to understanding the response plan.

[CGD 91–036, 61 FR 7917, Feb. 29, 1996, as amended by USCG–2000–7223, 65 FR 40058, June 29, 2000; USCG–2001–9286, 66 FR 33641, June 25, 2001; USCG–2008–0179, 73 FR 35014, June 19, 2008; USCG–2001–8661, 74 FR 45023, Aug. 31, 2009]

§ 154.1040 Specific requirements for facilities that could reasonably be expected to

cause substantial harm to the environment.

top

(a) The owner or operator of a facility that, under §154.1015, could reasonably be expected to cause substantial harm to the environment, shall submit a response plan that meets the requirements of §154.1035, except as modified by this section.

(b) The facility's response activities section of the response plan need not list the facility or corporate organizational structure that will be used to manage the response, as required by §154.1035(b)(3)(iii).

(c) The owner or operator of a facility must ensure the availability of response resources required to be identified in §154.1035(b)(3)(iv) by contract or other approved means described in §154.1028.

(d) A facility owner or operator must have at least 200 feet of containment boom and the means of deploying and anchoring the boom available at the spill site within 1 hour of the detection of a spill to respond to the average most probable discharge in lieu of the quantity of containment boom specified in §154.1045(c)(1). Based on site-specific or facility-specific information, the COTP may specify that additional quantities of containment boom are available within one hour. In addition, there must be adequate sorbent material for initial response to an average most probable discharge. If the facility is a fixed facility, the containment boom and sorbent material must be located at the facility. If the facility is a mobile facility, the containment boom and sorbent must be available locally and be at the site of the discharge within 1 hour of its discovery.

§ 154.1041 Specific response information to be maintained on mobile MTR facilities.

top

(a) Each mobile MTR facility must carry the following information as contained in the response plan when performing transfer operations:

(1) A description of response activities for a discharge which may occur during transfer operations. This may be a narrative description or a list of procedures to be followed in the event of a discharge.

(2) Identity of response resources to respond to a discharge from the mobile MTR facility.

(3) List of the appropriate persons and agencies (including the telephone numbers) to be contacted in regard to a discharge and its handling, including the National Response Center.

(b) The owner or operator of the mobile facility must also retain the information in this paragraph at the principal place of business.

§ 154.1045 Response plan development and evaluation criteria for facilities that handle, store, or transport Group I through Group IV petroleum oils.

top

(a) The owner or operator of a facility that handles, stores, or transports Group I through Group IV petroleum oils shall use the criteria in this section to evaluate response resources identified in the response plan for the specified operating environment.

(1) The criteria in Table 1 of appendix C of this part are to be used solely for identification of appropriate equipment in a response plan. These criteria reflect conditions used for planning purposes to select mechanical response equipment and are not conditions that would limit response actions or affect normal facility operations.

(2) The response resources must be evaluated considering limitations for the COTP zones in which the facility operates, including but not limited to—

(i) Ice conditions;

(ii) Debris;

(iii) Temperature ranges;

(iv) Weather-related visibility; and

(v) Other appropriate environmental conditions as determined by the COTP.

(3) The COTP may reclassify a specific body of water or location within the COTP zone. Any reclassifications will be identified by the COTP in the applicable ACP. Reclassifications may be to—

(i) A more stringent operating environment if the prevailing wave conditions exceed the significant wave height criteria during more than 35 percent of the year; or

(ii) A less stringent operating environment if the prevailing wave conditions do not exceed the significant wave height criteria for the less stringent operating environment during more than 35 percent of the year.

(b) Response equipment must—

(1) Meet or exceed the operating criteria listed in Table 1 of appendix C of this part;

(2) Function in the applicable operating environment; and

(3) Be appropriate for the petroleum oil carried.

(c) The response plan for a facility that handles, stores, or transports Group I through Group IV petroleum oils must identify response resources that are available, by contract or other approved means as described in §154.1028(a)(1)(4), to respond to the facility's average most probable discharge. The response resources must include, at a minimum—

(1) 1,000 feet of containment boom or two times the length of the largest vessel that regularly conducts petroleum oil transfers to or from the facility, whichever is greater, and the means of deploying and anchoring the boom available at the spill site within 1 hour of the detection of a spill; and

(2) Oil recovery devices and recovered oil storage capacity capable of being at the spill site within 2 hours of the discovery of a petroleum oil discharge from a facility.

(d) The response plan for a facility that handles, stores, or transports Group I through Group IV petroleum oils must identify response resources that are available, by contract or other approved means as described in §154.1028(a)(1)(4), to respond to a discharge up to the facility's maximum most probable discharge volume.

(1) The response resources must include sufficient containment boom, oil recovery devices, and storage capacity for any recovery of up to the maximum most probable discharge planning volume, as contained in appendix C.

(2) The response resources must be appropriate for each group of petroleum oil identified in §154.1020 that is handled, stored, or transported by the facility.

(3) These response resources must be positioned such that they can arrive at the scene of a discharge within the following specified times:

(i) The equipment identified in paragraphs (c)(1) and (c)(2) of this section or in §154.1040(d) must arrive within the times specified in those paragraphs or that section, as appropriate.

(ii) In higher volume port areas and the Great Lakes, response resources must be capable of arriving on scene within 6 hours of the discovery of a petroleum oil discharge from a facility.

(iii) In all other locations, response resources must be capable of arriving on scene within 12 hours of the discovery of a petroleum oil discharge from a facility.

(4) The COTP may determine that mobilizing response resources to an area beyond the response times indicated in this paragraph invalidates the response plan. In this event, the COTP may impose additional operational restrictions (e.g., limitations on the number of transfers at a facility), or, at the COTP's discretion, the facility may operate with temporarily modified response plan development and evaluation criteria (e.g., modified response times, alternate response resources, etc.).

(e) The response plan for a facility that handles, stores, or transports Group I through Group IV petroleum oils must identify the response resources that are available, by contract or other approved means as described in §154.1028(a)(1)(4), to respond to the worst case discharge volume of petroleum oil to the maximum extent practicable.

(1) The location of these response resources must be suitable to meet the response times identified in paragraph (f) of this section for the applicable geographic area(s) of operation and response tier.

(2) The response resources must be appropriate for—

(i) The volume of the facility's worst case discharge;

(ii) Group(s) of petroleum oil as identified in §154.1020 that are handled, stored, or transported by the facility; and

(iii) The geographic area(s) in which the facility operates.

(3) The response resources must include sufficient boom, oil recovery devices, and storage capacity to recover the worst case discharge planning volumes.

(4) The guidelines in appendix C of this part must be used for calculating the quantity of response resources required to respond at each tier to the worst case discharge to the maximum extent practicable.

(5) When determining response resources necessary to meet the requirements of this section, a portion of those resources must be capable of use in close-to-shore response activities in shallow water. The following percentages of the response equipment identified for the applicable geographic area must be capable of operating in waters of 6 feet or less depth.

(i) Offshore—10 percent.

(ii) Nearshore/inland/Great Lakes/rivers and canals—20 percent.

(6) The COTP may determine that mobilizing response resources to an area beyond the response times indicated in this paragraph invalidates the response plan. In this event, the COTP may impose additional operational restrictions (e.g., limitations on the number of transfers at a facility), or, at the COTP's discretion, the facility may be permitted to operate with temporarily modified response plan development and evaluation criteria (e.g., modified response times, alternate response resources, etc.).

(f) Response equipment identified in a response plan for a facility that handles, stores, or transports Group I through Group IV petroleum oils must be capable of arriving on scene within the times specified in this paragraph for the applicable response tier in a higher volume port area, Great Lakes, and in other areas. Response times for these tiers from the time of discovery of a discharge are—

	Tier 1 (hrs.)	Tier 2 (hrs.)	Tier 3 (hrs.)
Higher volume port area (except for a TAPAA facility located in Prince William Sound, see §154.1135)	6	30	54
Great Lakes	12	36	60
All other river and canal, inland, nearshore, and offshore areas	12	36	60

(g) For the purposes of arranging for response resources for a facility that handles, stores, or transports Group I through Group IV petroleum oils, by contract or other approved means as described in §154.1028(a)(1)–(4), response equipment identified for Tier 1 plan credit must be capable of being mobilized and en route to the scene of a discharge within 2 hours of notification. The notification procedures identified in the plan must provide for notification and authorization of mobilization of identified Tier 1 response resources—

(1) Either directly or through the qualified individual; and

(2) Within 30 minutes of a discovery of a discharge or substantial threat of discharge.

(h) Response resources identified for Tier 2 and Tier 3 plan credit must be capable of arriving on scene within the time specified for the applicable tier.

(i) The owner or operator of a facility that handles, stores, or transports groups II through IV petroleum oils within the inland, nearshore, or offshore areas where pre-authorization for dispersant use exists

must identify in their response plan, and ensure the availability of, through contract or other approved means, response resources capable of conducting dispersant operations within those areas.

(1) Dispersant response resources must be capable of commencing dispersant-application operations at the site of a discharge within 7 hours of the decision by the Federal On-Scene Coordinator to use dispersants.

(2) Dispersant response resources must include all of the following:

(i) Sufficient volumes of dispersants for application as required by paragraph (i)(3) of this section. Any dispersants identified in a response plan must be of a type listed on the National Oil and Hazardous Substances Pollution Contingency Plan Product Schedule (which is contained in 40 CFR part 300, and available online from the U.S. Government Printing Office).

(ii) Dispersant-application platforms capable of delivering and applying the dispersant on a discharge in the amounts as required by paragraph (i)(3) of this section. At least 50 percent of each EDAC tier requirement must be achieved through the use of fixed-wing, aircraft-based application platforms. For dispersant-application platforms not detailed within the DMP2, adequacy of performance criteria must be documented by presentation of independent evaluation materials (e.g., field tests and reports of actual use) that record the performance of the platform.

(iii) Dispersant-application systems that are consistent in design with, and are capable of applying dispersants within, the performance criteria in ASTM F1413–07 (incorporated by reference, *see* §154.106). For dispersant-application systems not fully covered by ASTM F1413–07, such as fire monitor-type applicators, adequacy of performance criteria must be documented by presentation of independent evaluation materials (e.g., laboratory tests, field tests, and reports of actual use) that record the design of performance specifications.

(iv) Dispersant-application personnel trained in and capable of applying dispersants according to the recommended procedures contained within ASTM F1737–07 (incorporated by reference, *see* §154.106).

(3) Dispersant stockpiles, application platforms, and other supporting resources must be available in a quantity and type sufficient to treat a facility's worst-case discharge (as determined by using the criteria in appendix C, section 8) or in quantities sufficient to meet the requirements in Table 154.1045(i) of this section, whichever is the lesser amount.

Table 154.1045(i)—Tiers for Effective Daily Application Capability

	Response time for completed application (hours)	Dispersant application dispersant: oil treated in gallons (Gulf Coast)	Dispersant application dispersant: oil treated in gallons all other U.S.
Tier 1	12	8,250:165,000	4,125:82,500
Tier 2	36	23,375:467,000	23,375:467,000
Tier 3	60	23,375:467,000	23,375:467,000
Total	60	55,000:1,100,000	50,875:1,017,500

Note to Table 154.1045(i): Gulf Coast Tier 1 is higher due to greater potential spill size and frequency in that area, and it is assumed that dispersant stockpiles would be centralized in the Gulf area. Alternative application ratios may be considered based upon submission to Coast Guard Headquarters, Office of Incident Management and Preparedness (CG–533, 202–372–2234, 2100 2nd Street, SW., room 2100, Washington, DC 20593) of peer-reviewed scientific evidence of improved capability.

(j) The owner or operator of a facility handling Groups I through IV petroleum oil as a primary cargo must identify in the response plan, and ensure the availability through contract or other approved means, of response resources necessary to provide aerial oil tracking to support oil spill assessment and cleanup activities. Facilities operating exclusively on inland rivers are not required to comply with this paragraph. Aerial oil tracking resources must:

(1) Be capable of arriving at the site of a discharge in advance of the arrival of response resources identified in the plan for tiers 1, 2, and 3 Worst-Case Discharge response times, and for a distance up to 50 nautical miles from shore (excluding inland rivers);

(2) Be capable of supporting oil spill removal operations continuously for three 10-hour operational periods during the initial 72 hours of the discharge;

(3) Include appropriately located aircraft and personnel capable of meeting the response time requirement for oil tracking from paragraph (j)(1) of this section; and

(4) Include sufficient numbers of aircraft, pilots, and trained observation personnel to support oil spill removal operations, commencing upon initial assessment, and capable of coordinating on-scene cleanup operations, including dispersant and mechanical recovery operations. Observation personnel must be trained in:

(i) The protocols of oil-spill reporting and assessment, including estimation of slick size, thickness, and quantity; and

(ii) The use of assessment techniques in ASTM F1779–08 (incorporated by reference, *see* §154.106), and familiar with the use of other guides, such as NOAA's “Open Water Oil Identification Job Aid for Aerial Observation,” and NOAA's “Characteristic Coastal Habitats” guide (available on the Internet at *http://response.restoration.noaa.gov/* use the following links in the order presented: Home&bond;Emergency Response&bond;Responding to Oil Spills).

(k) A response plan for a facility that handles, stores, or transports Group I through Group IV petroleum oils must identify response resources with firefighting capability. The owner or operator of a facility that does not have adequate firefighting resources located at the facility or that can not rely on sufficient local firefighting resources must identify and ensure, by contract or other approved means as described in §154.1028(a)(1)–(4), the availability of adequate firefighting resources. The response plan must also identify an individual located at the facility to work with the fire department for petroleum oil fires. This individual shall also verify that sufficient well-trained firefighting resources are available within a reasonable time to respond to a worst case discharge. The individual may be the qualified individual as defined in §154.1020 and identified in the response plan or another appropriate individual located at the facility.

(l) The response plan for a facility that handles, stores, or transports Groups I through IV petroleum oils must identify equipment and required personnel available, by contract or other approved means as described in §154.1028(a) (1)–(4), to protect fish and wildlife and sensitive environments.

(1) Except as set out in paragraph (k)(2) of this section, the identified response resources must include the quantities of boom sufficient to protect fish and wildlife and sensitive environments as required by §154.1035(b)(4).

(2) The resources and response methods identified in a facility response plan must be consistent with the required resources and response methods to be used in fish and wildlife and sensitive environments, contained in the appropriate ACP. Facility owners or operators shall ensure that their response plans are in accordance with the ACP in effect 6 months prior to initial plan submission or the annual plan review required under §154.1065(a). Facility owners or operators are not required to, but may at their option, conform to an ACP which is less than 6 months old at the time of plan submission.

(m) The response plan for a facility that handles, stores, or transports Groups I through IV petroleum oils must identify an oil spill removal organization(s) with response resources that are available, by contract or other approved means as described in §154.1028(a) (1)–(4), to effect a shoreline cleanup operation commensurate with the quantity of emulsified petroleum oil to be planned for in shoreline cleanup operations.

(1) Except as required in paragraph (l)(2) of this section, the shoreline cleanup response resources required must be determined as described in appendix C of this part.

(2) The resources and response methods identified in a facility response plan must be consistent with the required shoreline cleanup resources and methods contained in the appropriate ACP. Facility owners or operators shall ensure that their response plans are in accordance with the ACP in effect 6 months prior to initial plan submission or the annual plan review required under §154.1065(a). Facility owners or operators are not required to, but may at their option, conform to an ACP which is less than 6 months old at the time of plan submission.

(n) Appendix C of this part describes the procedures to determine the maximum extent practicable quantity of response resources that must be identified and available, by contract or other approved means as described in §154.1028(a) (1)–(4), for the maximum most probable discharge volume, and for each worst case discharge response tier.

(1) Included in appendix C of this part is a cap that recognizes the practical and technical limits of response capabilities that an individual facility owner or operator can be expected to contract for in advance.

(2) Table 5 in appendix C of this part lists the caps that apply in February 18, 1993, and February 18, 1998. Depending on the quantity and type of petroleum oil handled by the facility and the facility's geographic area of operations, the resource capability caps in this table may be reached. The owner or operator of a facility whose estimated recovery capacity exceeds the applicable contracting caps in Table 5 shall identify sources of additional equipment equal to twice the cap listed in Tiers 1, 2, and 3 or the amount necessary to reach the calculated planning volume, whichever is lower. The identified resources must be capable of arriving on scene not later than the Tier 1, 2, and 3 response times in this section. No contract is required. While general listings of available response equipment may be used to identify additional sources, a response plan must identify the specific sources, locations, and quantities of equipment that a facility owner or operator has considered in his or her planning. When listing Coast Guard classified oil spill removal organization(s) which have sufficient removal capacity to recover the volume above the response capability cap for the specific facility, as specified in Table 5 in appendix C of this part, it is not necessary to list specific quantities of equipment.

(o) The Coast Guard will continue to evaluate the environmental benefits, cost efficiency and practicality of increasing mechanical recovery capability requirements. This continuing evaluation is part of the Coast Guard's long term commitment to achieving and maintaining an optimum mix of oil spill response capability across the full spectrum of response modes. As best available technology demonstrates a need to evaluate or change mechanical recovery capacities, a review of cap increases and other requirements contained within this subpart may be performed. Any changes in the requirements of this section will occur through a public notice and comment process. During this review, the Coast Guard will determine if established caps remain practicable and if increased caps will provide any benefit to oil spill recovery operations. The review will include, at least, an evaluation of:

(1) Best available technologies for containment and recovery;

(2) Oil spill tracking technology;

(3) High rate response techniques;

(4) Other applicable response technologies; and

(5) Increases in the availability of private response resources.

[CGD 91–036, 61 FR 7917, Feb. 29, 1996, as amended by USCG–2001–8661, 74 FR 45024, Aug. 31, 2009]

§ 154.1047 Response plan development and evaluation criteria for facilities that handle, store, or transport Group V petroleum oils.

top

(a) An owner or operator of a facility that handles, stores, or transports Group V petroleum oils must provide information in his or her response plan that identifies—

(1) Procedures and strategies for responding to a worst case discharge of Group V petroleum oils to the maximum extent practicable; and

(2) Sources of the equipment and supplies necessary to locate, recover, and mitigate such a discharge.

(b) An owner or operator of a facility that handles, stores, or transports Group V petroleum oil must ensure that any equipment identified in a response plan is capable of operating in the conditions expected in the geographic area(s) in which the facility operates using the criteria in Table 1 of appendix C of this part. When evaluating the operability of equipment, the facility owner or operator must consider limitations that are identified in the ACPs for the COTP zones in which the facility operates, including—

(1) Ice conditions;

(2) Debris;

(3) Temperature ranges; and

(4) Weather-related visibility.

(c) The owner or operator of a facility that handles, stores, or transports Group V petroleum oil must identify the response resources that are available by contract or other approved means as described in §154.1028. The equipment identified in a response plan must include—

(1) Sonar, sampling equipment, or other methods for locating the petroleum oil on the bottom or suspended in the water column;

(2) Containment boom, sorbent boom, silt curtains, or other methods for containing the petroleum oil that may remain floating on the surface or to reduce spreading on the bottom;

(3) Dredges, pumps, or other equipment necessary to recover petroleum oil from the bottom and shoreline;

(4) Equipment necessary to assess the impact of such discharges; and

(5) Other appropriate equipment necessary to respond to a discharge involving the type of petroleum oil handled, stored, or transported.

(d) Response resources identified in a response plan for a facility that handles, stores, or transports Group V petroleum oils under paragraph (c) of this section must be capable of being at the spill site within 24 hours of discovery of a discharge.

(e) A response plan for a facility that handles, stores, or transports Group V petroleum oils must identify response resources with firefighting capability. The owner or operator of a facility that does not have adequate firefighting resources located at the facility or that can not rely on sufficient local firefighting resources must identity and ensure, by contract or other approved means as described in §154.1028, the availability of adequate firefighting resources. The response plan must also identify an individual located at the facility to work with the fire department for petroleum oil fires. This individual shall also verify that sufficient well-trained firefighting resources are available within a reasonable response time to a worst case scenario. The individual may be the qualified individual as defined in §154.1020 and identified in the response plan or another appropriate individual located at the facility.

§ 154.1050 Training.

top

(a) A response plan submitted to meet the requirements of §§154.1035 or 154.1040, as appropriate, must identify the training to be provided to each individual with responsibilities under the plan. A facility owner or operator must identify the method to be used for training any volunteers or casual laborers used during a response to comply with the requirements of 29 CFR 1910.120.

(b) A facility owner or operator shall ensure the maintenance of records sufficient to document training of facility personnel; and shall make them available for inspection upon request by the U.S. Coast Guard. Records for facility personnel must be maintained at the facility for 3 years.

(c) Where applicable, a facility owner or operator shall ensure that an oil spill removal organization identified in a response plan to meet the requirements of this subpart maintains records sufficient to document training for the organization's personnel and shall make them available for inspection upon request by the facility's management personnel, the qualified individual, and U.S. Coast Guard. Records must be maintained for 3 years following completion of training.

(d) The facility owner or operator remains responsible for ensuring that all private response personnel are trained to meet the Occupational Safety and Health Administration (OSHA) standards for emergency response operations in 29 CFR 1910.120.

§ 154.1055 Exercises.

top

(a) A response plan submitted by an owner or operator of an MTR facility must include an exercise program containing both announced and unannounced exercises. The following are the minimum exercise requirements for facilities covered by this subpart:

(1) Qualified individual notification exercises (quarterly).

(2) Spill management team tabletop exercises (annually). In a 3-year period, at least one of these exercises must include a worst case discharge scenario.

(3) Equipment deployment exercises:

(i) Semiannually for facility owned and operated equipment.

(ii) Annually for oil spill removal organization equipment.

(4) Emergency procedures exercises (optional).

(5) Annually, at least one of the exercises listed in §154.1055(a)(2) through (4) must be unannounced. Unannounced means the personnel participating in the exercise must not be advised in advance, of the exact date, time and scenario of the exercise.

(6) The facility owner or operator shall design the exercise program so that all components of the response plan are exercised at least once every 3 years. All of the components do not have to be exercised at one time; they may be exercised over the 3-year period through the required exercises or through an Area exercise.

(b) A facility owner or operator shall participate in unannounced exercises, as directed by the COTP. The objectives of the unannounced exercises will be to test notifications and equipment deployment for response to the average most probable discharge. After participating in an unannounced exercise directed by a COTP, the owner or operator will not be required to participate in another COTP initiated unannounced exercise for at least 3 years from the date of the exercise.

(c) A facility owner or operator shall participate in Area exercises as directed by the applicable On-Scene Coordinator. The Area exercises will involve equipment deployment to respond to the spill scenario developed by the Exercise Design Team, of which the facility owner or operator will be a member. After participating in an Area exercise, a facility owner or operator will not be required to participate in another Area exercise for at least 6 years.

(d) The facility owner or operator shall ensure that adequate records of all required exercises are maintained at the facility for 3 years. Records shall be made available to the Coast Guard upon request.

(e) The response plan submitted to meet the requirements of this subpart must specify the planned exercise program. The plan must detail the exercise program, including the types of exercises, frequency, scope, objectives and the scheme for exercising the entire response plan every 3 years.

(f) Compliance with the National Preparedness for Response Exercise Program (PREP) Guidelines will satisfy the facility response plan exercise requirements. These guidelines are available from the TASC DEPT Warehouse, 33141Q 75th Avenue, Landover, MD 20875 (fax: 301–386–5394, stock number USCG–X0241). Compliance with an alternative program that meets the requirements of paragraph (a) of this section and has been approved under §154.1060 will also satisfy the facility response plan exercise requirements.

Note to paragraph (f): The PREP guidelines are available online at *http://dmses.dot.gov/docimages/pdf1a/198001_web.pdf.*

[CGD 91–036, 61 FR 7917, Feb. 29, 1996, as amended by USCGD–2003–15404, 68 FR 37741, June 25, 2003]

§ 154.1057 Inspection and maintenance of response resources.

top

(a) A facility owner or operator required to submit a response plan under this part must ensure that—

(1) Containment booms, skimmers, vessels, and other major equipment listed or referenced in the plan are periodically inspected and maintained in good operating condition, in accordance with manufacturer's recommendations, and best commercial practices; and

(2) All inspection and maintenance is documented and that these records are maintained for 3 years.

(b) For equipment which must be inspected and maintained under this section the Coast Guard may—

(1) Verify that the equipment inventories exist as represented;

(2) Verify the existences of records required under this section;

(3) Verify that the records of inspection and maintenance reflect the actual condition of any equipment

listed or referenced; and

(4) Inspect and require operational tests of equipment.

(c) This section does not apply to containment booms, skimmers, vessels, and other major equipment listed or referenced in the plan and ensured available from an oil spill removal organization through the written consent required under §154.1028(a)(5).

§ 154.1060 Submission and approval procedures.

top

(a) The owner or operator of a facility to which this subpart applies shall submit one copy of a facility response plan meeting the requirements of this subpart to the COTP for initial review and, if appropriate, approval.

(b) The owner or operator of a facility to which this subpart applies shall include a statement certifying that the plan meets the applicable requirements of subparts F, G, H, and I of this part, as appropriate.

(c) For an MTR facility that is located in the inland response zone where the EPA Regional Administrator is the predesignated Federal On-Scene Coordinator, the COTP may consult with the EPA Federal On-Scene Coordinator prior to any final approval.

(d) For an MTR facility identified in §154.1015(c) of this subpart that is also required to prepare a response plan under 40 CFR part 112, if the COTP determines that the plan meets all applicable requirements and the EPA Regional Administrator raises no objection to the response plan contents, the COTP will notify the facility owner or operator in writing that the plan is approved.

(e) The plan will be valid for a period of up to 5 years. The facility owner or operator must resubmit an updated plan every 5 years as follows:

(1) For facilities identified in only §154.1015(b) of this subpart, the 5-year period will commence on the date the plan is submitted to the COTP.

(2) For facilities identified in §154.1015(c) of this subpart, the 5-year period will commence on the date the COTP approves the plan.

(3) All resubmitted response plans shall be accompanied by a cover letter containing a detailed listing of all revisions to the response plan.

(f) For an MTR facility identified in §154.1015(c)(2) the COTP will notify the facility owner or operator in writing that the plan is approved.

(g) If a COTP determines that a plan does not meet the requirements of this subpart either upon initial submission or upon 5-year resubmission, the COTP will return the plan to the facility owner or operator along with an explanation of the response plan's deficiencies. The owner or operator must correct any deficiencies in accordance with §154.1070 and return the plan to the COTP within the time specified by the COTP in the letter describing the deficiencies.

(h) The facility owner or operator and the qualified individual and the alternative qualified individual shall each maintain a copy of the most current response plan submitted to the COTP. One copy must be maintained at the facility in a position where the plan is readily available to persons in charge of conducting transfer operations.

§ 154.1065 Plan review and revision procedures.

top

(a) A facility owner or operator must review his or her response plan(s) annually. This review shall incorporate any revisions to the plan, including listings of fish and wildlife and sensitive environments identified in the ACP in effect 6 months prior to plan review.

(1) For an MTR facility identified in §154.1015(c) of this subpart as a “significant and substantial harm facility,” this review must occur within 1 month of the anniversary date of COTP approval of the plan. For an MTR facility identified in §154.1015(b) of this subpart, as a “substantial harm facility” this review must occur within 1 month of the anniversary date of submission of the plan to the COTP.

(2) The facility owner or operator shall submit any revision(s) to the response plan to the COTP and all other holders of the response plan for information or approval, as appropriate.

(i) Along with the revisions, the facility owner or operator shall submit a cover letter containing a detailed listing of all revisions to the response plan.

(ii) If no revisions are required, the facility owner or operator shall indicate the completion of the annual review on the record of changes page.

(iii) The COTP will review the revision(s) submitted by the owner or operator and will give written notice to the owner or operator of any COTP objection(s) to the proposed revisions within 30 days of the date the revision(s) were submitted to the COTP. The revisions shall become effective not later than 30 days from their submission to the COTP unless the COTP indicates otherwise in writing as provided in this paragraph. If the COTP indicates that the revision(s) need to be modified before implementation, the owner or operator will modify the revision(s) within the time period set by the COTP.

(3) Any required revisions must be entered in the plan and noted on the record of changes page.

(b) The facility owner or operator shall submit revisions to a previously submitted or approved plan to the COTP and all other holders of the response plan for information or approval within 30 days, whenever there is—

(1) A change in the facility's configuration that significantly affects the information included in the response plan;

(2) A change in the type of oil (petroleum oil group) handled, stored, or transported that affects the required response resources;

(3) A change in the name(s) or capabilities of the oil spill removal organization required by §154.1045;

(4) A change in the facility's emergency response procedures;

(5) A change in the facility's operating area that includes ports or geographic area(s) not covered by the previously approved plan. A facility may not operate in an area not covered in a plan previously submitted or approved, as appropriate, unless the revised plan is approved or interim operating approval is received under §154.1025; or

(6) Any other changes that significantly affect the implementation of the plan.

(c) Except as required in paragraph (b) of this section, revisions to personnel and telephone number lists included in the response plan do not require COTP approval. The COTP and all other holders of the response plan shall be advised of these revisions and provided a copy of the revisions as they occur.

(d) The COTP may require a facility owner or operator to revise a response plan at any time as a result of a compliance inspection if the COTP determines that the response plan does not meet the requirements of this subpart or as a result of inadequacies noted in the response plan during an actual pollution incident at the facility.

(e) If required by §§154.1035(b)(3) or 154.1045, a new or existing facility owner or operator must submit the required dispersant and aerial oil tracking resource revisions to a previously submitted or approved plan, made pursuant to §§154.1035(b)(3) or 154.1045, to the COTP and all other holders of the response plan for information or approval no later than February 22, 2011.

[CGD 91–036, 61 FR 7917, Feb. 29, 1996, as amended by USCG–2001–8661, 74 FR 45025, Aug. 31, 2009]

§ 154.1070 Deficiencies.

top

(a) The cognizant COTP will notify the facility owner or operator in writing of any deficiencies noted during review of a response plan, drills observed by the Coast Guard, or inspection of equipment or records maintained in connection with this subpart.

(b) Deficiencies shall be corrected within the time period specified in the written notice provided by the COTP. The facility owner or operator who disagrees with a deficiency issued by the COTP may appeal the deficiency to the cognizant COTP within 7 days or the time specified by the COTP to correct the

deficiency, whichever is less. This time commences from the date of receipt of the COTP notice. The owner or operator may request a stay from the COTP decision pending appeal in accordance with §154.1075.

(c) If the facility owner or operator fails to correct any deficiencies or submit a written appeal, the COTP may invoke the provisions of §154.1025 prohibiting the facility from storing, handling, or transporting oil.

§ 154.1075 Appeal process.

top

(a) Any owner or operator of a facility who desires to appeal the classification that a facility could reasonably be expected to cause substantial harm or significant and substantial harm to the environment, shall submit a written request to the cognizant COTP requesting review and reclassification by the COTP. The facility owner or operator shall identify those factors to be considered by the COTP. The factors to be considered by the COTP regarding reclassification of a facility include, but are not limited to, those listed in §154.1016(b). After considering all relevant material presented by the facility owner or operator and any additional material available to the COTP, the COTP will notify the facility owner or operator of the decision on the reclassification of the facility.

(b) Any facility owner or operator directly affected by an initial determination or action of the COTP may submit a written request to the cognizant COTP requesting review and reconsideration of the COTP's decision or action. The facility owner or operator shall identify those factors to be considered by the COTP in making his or her decision on reconsideration.

(c) Within 10 days of the COTP's decision under paragraph (b) of this section, the facility owner or operator may appeal the decision of the COTP to the District Commander. This appeal shall be made in writing via the cognizant COTP to the District Commander of the district in which the office of the COTP is located.

(d) Within 30 days of the District Commander's decision, the facility owner or operator may formally appeal the decision of the District Commander. This appeal shall be submitted in writing to Commandant (CG–535) via the District Commander.

(e) When considering an appeal, the COTP, District Commander, or Commandant may stay the effect of the decision or action being appealed pending the determination of the appeal.

[CGD 91–036, 61 FR 7930, Feb. 29, 1996, as amended by CGD 96–026, 61 FR 33666, June 28, 1996; USCG–2010–0351, 75 FR 36284, June 25, 2010]

Subpart G—Additional Response Plan Requirements for a Trans-Alaska Pipeline Authorization Act (TAPAA) Facility Operating in Prince William Sound, Alaska

top

Source: CGD 91–036, 61 FR 7930, Feb. 29, 1996, unless otherwise noted.

§ 154.1110 Purpose and applicability.

top

(a) This subpart establishes oil spill response planning requirements for a facility permitted under the Tans-Alaska Pipeline Authorization Act (TAPAA), in addition to the requirements of subpart F of this part. The requirements of this subpart are intended for use in developing response plans and identifying response resources during the planning process. They are not performance standards.

(b) The information required by this subpart must be included in the Prince William Sound facility-specific appendix to the facility response plan required by subpart F of this part.

§ 154.1115 Definitions.

top

In addition to the definitions in this section, the definitions in §§154.105 and 154.1020 apply to this

subpart. As used in this subpart—

Crude oil means any liquid hydrocarbon mixture occurring naturally in the earth, whether or not treated to render it suitable for transportation, and includes crude oil from which certain distillate fractions may have been removed, and crude oil to which certain distillate fractions may have been added.

Non-crude oil means any oil other than crude oil.

Prince William Sound means all State and Federal waters within Prince William Sound, Alaska, including the approach to Hinchinbrook Entrance out to and encompassing Seal Rocks.

§ 154.1120 Operating restrictions and interim operating authorization.

top

(a) The owner or operator of a TAPAA facility may not operate in Prince William Sound, Alaska, unless the requirements of this subpart as well as §154.1025 have been met. The owner or operator of a TAPAA facility shall certify to the COTP that he or she has provided, through an oil spill removal organization required by §154.1125, the necessary response resources to remove, to the maximum extend practicable, a worst case discharge or a discharge of 200,000 barrels of oil, whichever is grater, in Prince William Sound.

(b) Coast Guard approval of a TAPAA facility response plan is effective only so long as the appropriate Regional Citizens Advisory Council(s) is funded pursuant to the requirements of section 5002(k) of the Oil Pollution Act of 1990 (Pub. L. 101–380; 104 Stat. 484, 550).

§ 154.1125 Additional response plan requirements.

top

(a) The owner or operator of a TAPAA facility shall include the following information in the Prince William Sound appendix to the response plan required by subpart F of this part:

(1) *Oil spill removal organization.* Identification of an oil spill removal organization that shall—

(i) Perform response activities;

(ii) Provide oil spill removal and containment training, including training in the operation of prepositioned equipment for personnel, including local residents and fishermen, from the following locations in Prince William Sound:

(A) Valdez;

(B) Tatitlek;

(C) Cordova;

(D) Whittier;

(E) Chenega; and

(F) Fish hatcheries located at Port San Juan, Main Bay, Esther Island, Cannery Creek, and Solomon Gulch.

(iii) Provide a plan for training, in addition to the personnel listed in paragraph (a)(1)(ii) of this section, sufficient numbers of trained personnel to remove, to the maximum extent practicable, a worst case discharge; and

(iv) Address the responsibilities required in §154.1035(b)(3)(iii).

(2) *Exercises.* Identification of exercise procedures that must—

(i) Provide for two exercises of the oil spill removal organization each year that test the ability of the prepositioned equipment and trained personnel required under this subpart to perform effectively;

(ii) Consist of both announced and unannounced drills; and

(iii) Include design(s) for exercises that test either the entire appendix or individual components(s).

(3) *Testing, inspection, and certification.* Identification of a testing, inspecting, and certification program for the prepositioned response equipment required in §154.1130 that must provide for—

(i) Annual testing and equipment inspection in accordance with the manufacturer's recommended procedures, to include—

(A) Start-up and running under load all electrical motors, pumps, power packs, air compressors, internal combustion engines, and oil recovery devices; and

(B) Removal for inspection of no less than one-third of required boom from storage annually, such that all boom will have been removed and inspected within a period of 3 years; and

(ii) Records of equipment tests and inspection.

(iii) Use of an independent entity to certify that the equipment is on-site and in good operating condition and that required tests and inspection have been preformed. The independent entity must have appropriate training and expertise to provide this certification.

(4) *Prepositioned response equipment.* Identification and location of the prepositioned response equipment required in §154.1130 including the make, model, and effective daily recovery rate of each oil recovery resource.

(b) The owner or operator of a TAPAA facility shall submit to the COTP a schedule for the training and drills required by the geographic-specific appendix for Prince William Sound for the following calendar year.

(c) All records required by this section must be available for inspection by the COTP.

§ 154.1130 Requirements for prepositioned response equipment.

top

The owner or operator of a TAPAA facility shall provide the following prepositioned response equipment, located within Prince William Sound, in addition to that required by §§154.1035, 154.1045, or 154.1050:

(a) On-water recovery equipment with a minimum effective daily recovery rate of 30,000 barrels capable of being a scene within 2 hours of notification of a discharge.

(b) On-water storage capacity of 100,000 barrels for recovered oily material capable of being on scene within 2 hours of notification of a discharge.

(c) On-water recovery equipment with a minimum effective daily recovery rate of 40,000 barrels capable of being on scene within 18 hours of notification of discharge.

(d) On-water storage capacity of 300,000 barrels for recovered oily material capable of being on scene within 12 hours of notification of a discharge.

(e) On-water recovery devices and storage equipment located in communities at strategic locations.

(f) Equipment as identified below, for the locations identified in §154.1125(a)(1)(ii) sufficient for the protection of the environment in these locations:

(1) Boom appropriate for the specific locations.

(2) Sufficient boats to deploy boom and sorbents.

(3) Sorbent materials.

(4) Personnel protective clothing and equipment.

(5) Survival equipment.

(6) First aid supplies.

(7) Buckets, shovels, and various other tools.

(8) Decontamination equipment.

(9) Shoreline cleanup equipment.

(10) Mooring equipment.

(11) Anchored buoys at appropriate locations to facilitate the positioning of defensive boom.

(12) Other appropriate removal equipment for the protection of the environment as identified by the COTP.

§ 154.1135 Response plan development and evaluation criteria.

top

The following response times must be used in determining the on scene arrival time in Prince William Sound for the response resources required by §154.1045:

	Tier 1 (hrs.)	Tier 2 (hrs.)	tier 3 (hrs.)
Prince William Sound Area	12	24	36

§ 154.1140 TAPAA facility contracting with a vessel.

top

The owner or operator of a TAPAA facility may contract with a vessel owner or operator to meet some of all of the requirements of subpart G of part 155 of this chapter. The extent to which these requirements are met by the contractual arrangement will be determined by the COTP.

Subpart H—Response Plans for Animal Fats and Vegetable Oils Facilities

top

Source: CGD 91–036, 61 FR 7931, Feb. 29, 1996, unless otherwise noted.

§ 154.1210 Purpose and applicability.

top

(a) The requirements of this subpart are intended for use in developing response plans and identifying response resources during the planning process. They are not performance standards.

(b) This subpart establishes oil spill response planning requirements for an owner or operator of a facility that handles, stores, or transports animal fats or vegetable oils including—

(1) A fixed MTR facility capable of transferring oil in bulk, to or from a vessel with a capacity of 250 barrels or more; and

(2) A mobile MTR facility used or intended to be used to transfer oil to or from a vessel with a capacity of 250 barrels or more.

[USCG–1999–5149, 65 FR 40825, June 30, 2000]

§ 154.1216 Facility classification.

top

(a) The Coast Guard classifies facilities that handle, store, or transport animal fats or vegetable oils as "substantial harm" facilities because they may cause substantial harm to the environment by discharging oil.

(b) The COTP may change the classification of a facility that handles, stores, or transports animal fats or vegetable oils. The COTP may consider the following factors, and any other relevant factors, before changing the classification of a facility:

(1) The type and quantity of oils handled.

(2) The spill history of the facility.

(3) The age of the facility.

(4) The public and commercial water supply intakes near the facility.

(5) The navigable waters near the facility. *Navigable waters* is defined in 33 CFR part 2.36.

(6) The fish, wildlife, and sensitive environments near the facility.

[USCG–1999–5149, 65 FR 40825, June 30, 2000, as amended by USCG–2008–0179, 73 FR 35014, June 19, 2008]

§ 154.1220 Response plan submission requirements.

top

(a) The owner or operator of an MTR facility identified in §154.1216 as a substantial harm facility, shall prepare and submit to the cognizant COTP a response plan that complies with this subpart and all sections of subpart F of this part, as appropriate, except §§154.1015, 154.1016, 154.1017, 154.1028, 154.1045 and 154.1047.

(b) The owner or operator of an MTR facility classified by the COTP under §154.1216(b) as a significant and substantial harm facility, shall prepare and submit for review and approval of the cognizant COTP a response plan that complies with this subpart and all sections of subpart F of this part, as appropriate, except §§154.1015, 154.1016, 154.1017, 154.1028, 154.1045 and 154.1047.

(c) In addition to the requirements in paragraph (a) of this section, the response plan for a mobile MTR facility must meet the requirements of §154.1041 subpart F.

[USCG–1999–5149, 65 FR 40825, June 30, 2000]

§ 154.1225 Specific response plan development and evaluation criteria and other requirements for fixed facilities that handle, store, or transport animal fats or vegetable oils.

top

(a) The owner or operator of a fixed facility that handles, stores, or transports animal fats or vegetable oils must include information in the response plan that identifies—

(1) The procedures and strategies for responding to a worst case discharge and to an average most probable discharge of an animal fat or vegetable oil to the maximum extent practicable; and

(2) Sources of the equipment and supplies necessary to locate, recover, and mitigate such a discharge.

(b) The owner or operator of a fixed facility must ensure the equipment listed in the response plan will operate in the geographic area(s) where the facility operates. To determine if the equipment will operate, the owner or operator must—

(1) Use the criteria in Table 1 and Section 2 of appendix C of this part; and

(2) Consider the limitations in the area contingency plan for the COTP zone where the facility is located, including

(i) Ice conditions;

(ii) Debris;

(iii) Temperature ranges; and

(iv) Weather-related visibility.

(c) The owner or operator of a facility that handles, stores, or transports animal fats or vegetable oils must name the personnel and list the equipment, including those that are specified in §154.1240, that are available by contract or by a method described in §154.1228(a). The owner or operator is not required, but may at their option, refer to the tables in Environmental Protection Agency regulations, 40 CFR 112, Appendix E, Section 10.0, Tables 6 and 7, to determine necessary response resources.

(d) The owner or operator of a facility that handles, stores, or transports animal fats or vegetable oils must ensure that the response resources in paragraph (c) of this section are able to effectively respond to an incident within the amount of time indicated in the following table, unless otherwise specified in §154.1240:

	Tier 1 (hrs.)	Tier 2	Tier 3
Higher volume port area	6	N/A	N/A.
Great Lakes	12	N/A	N/A.
All other river and canal, inland, nearshore, and offshore areas	12	N/A	N/A.

(e) The owner or operator of a facility that handles, stores, or transports animal fats or vegetable oils must—

(1) List in the plan the personnel and equipment that the owner or operator will use to fight fires.

(2) If there is not enough equipment or personnel located at the facility, arrange by contract or a method described in §154.1228(a), or through a cooperative agreement with public fire-fighting resources, to have the necessary personnel and equipment available to fight fires.

(3) Identify an individual located at the facility who will work with the fire department on fires, involving an animal fat or vegetable oil. The individual—

(i) Verifies that there are enough trained personnel and operating equipment within a reasonable distance to the incident to fight fires.

(ii) Can be the qualified individual defined in §154.1020 or an appropriate individual located at the facility.

(f) For a fixed facility, except for facilities that are part of a non-transportation-related fixed onshore facility with a storage capacity of less than 42,000 gallons, the owner or operator must also ensure and identify, through contract or a method described in §154.1228, response resources for an average most probable discharge, including—

(1) At least 1,000 feet of containment boom or two times the length of the longest vessel that regularly conducts operations at the facility, whichever is greater, and the means of deploying and anchoring the boom within 1 hour of the discovery of an incident. Based on site-specific or facility-specific information, the COTP may require the facility owner or operator to make available additional quantities of containment boom within 1 hour of an incident;

(2) Adequate sorbent material located at the facility;

(3) Oil recovery devices and recovered oil storage capacity capable of being at the incident's site within 2 hours of the discovery of an incident; and

(4) Other appropriate equipment necessary to respond to an incident involving the type of oil handled.

(g) For a mobile facility or a fixed facility that is part of a non-transportation-related onshore facility with a storage capacity of less than 42,000 gallons, the owner or operator must meet the requirements of §154.1041, and ensure and identify, through contract or a method described in §154.1228, response resources for an average most probable discharge, including—

(1) At least 200 feet of containment boom and the means of deploying and anchoring the boom within 1 hour of the discovery of an incident. Based on site-specific or facility-specific information, the COTP may require the facility owner or operator to make available additional quantities of containment boom within 1 hour of the discovery of an incident;

(2) Adequate sorbent material capable of being at the site of an incident within 1 hour of its discovery;

(3) Oil recovery devices and recovered oil storage capacity capable of being at incident's site within 2 hours of the discovery of an incident; and

(4) Other equipment necessary to respond to an incident involving the type of oil handled.

(h) The response plan for a facility that is located in any environment with year-round preapproval for use of dispersants and that handles, stores, or transports animal fats and vegetables oils may request a credit for up to 25 percent of the worst case planning volume set forth by subpart F of this part. To receive this credit, the facility owner or operator must identify in the plan and ensure, by contract or other approved means as described in §154.1228(a), the availability of specified resources to apply the dispersants and to monitor their effectiveness. The extent of the credit for dispersants will be based on the volumes of the dispersants available to sustain operations at the manufacturers' recommended dosage rates. Other spill mitigation techniques, including mechanical dispersal, may be identified in the response plan provided they are in accordance with the NCP and the applicable ACP. Resources identified for plan credit should be capable of being on scene within 12 hours of a discovery of a discharge. Identification of these resources does not imply that they will be authorized for use. Actual authorization for use during a spill response will be governed by the provisions of the NCP and the applicable ACP.

[CGD 91–036, 61 FR 7931, Feb. 29, 1996, as amended by USCG–1999–5149, 65 FR 40826, June 30, 2000]

§ 154.1228 Methods of ensuring the availability of response resources by contract or other approved means.

top

(a) When required in this subpart, the availability of response resources must be ensured by the following methods:

(1) The identification of an oil spill removal organization with specified equipment and personnel available within stipulated response times in specified geographic areas. The organization must provide written consent to being identified in the plan;

(2) A document which—

(i) Identifies the personnel, equipment, and services capable of being provided by the oil spill removal organization within stipulated response times in the specified geographic areas;

(ii) Sets out the parties' acknowledgment that the oil spill removal organization intends to commit the resources in the event of a response;

(iii) Permits the Coast Guard to verify the availability of the identified response resources through tests, inspections, and drills;

(iv) Is referenced in the response plan;

(3) Active membership in a local or regional oil spill removal organization that has identified specified personnel and equipment required under this subpart that are available to response to a discharge within stipulated response times in the specified geographic areas;

(4) Certification by the facility owner or operator that specified personnel and equipment required under this subpart are owned, operated, or under the direct control of the facility owner or operator, and are

available within stipulated response times in the specified geographic areas; or

(5) A written contractual agreement with an oil spill removal organization. The agreement must identify and ensure the availability of specified personnel and equipment required under this subpart within stipulated response times in the specified geographic areas.

(b) The contracts and documents required in paragraph (a) of this section must be retained at the facility and must be produced for review upon request by the COTP.

§ 154.1240 Specific requirements for animal fats and vegetable oils facilities that could reasonably be expected to cause substantial harm to the environment.

top

(a) The owner or operator of a facility, classified under §154.1216 as a facility that could reasonably be expected to cause substantial harm to the environment, must submit a response plan that meets the requirements of §154.1035, except as modified by this section.

(b) The plan does not need to list the facility or corporate organizational structure that the owner or operator will use to manage the response, as required by §154.1035(b)(3)(iii).

(c) The owner or operator must ensure and identify, by contract or a method described in §154.1228, that the response resources required under §154.1035(b)(3)(iv) are available for a worst case discharge.

[USCG–1999–5149, 65 FR 40827, June 30, 2000]

Subpart I—Response Plans for Other Non-Petroleum Oil Facilities

top

Source: CGD 91–036, 61 FR 7932, Feb. 29, 1996, unless otherwise noted.

§ 154.1310 Purpose and applicability.

top

This subpart establishes oil spill response planning requirements for an owner or operator of a facility that handles, stores, or transports other non-petroleum oils. The requirements of this subpart are intended for use in developing response plans and identifying response resources during the planning process. They are not performance standards.

§ 154.1320 Response plan submission requirements.

top

An owner or operator of a facility that handles, stores, or transports other non-petroleum oils shall submit a response plan in accordance with the requirements of this subpart, and with all sections of subpart F of this part, except §§154.1045 and 154.1047, which apply to petroleum oils.

§ 154.1325 Response plan development and evaluation criteria for facilities that handle, store, or transport other non-petroleum oils.

top

(a) An owner or operator of a facility that handles, stores, or transports other non-petroleum oils must provide information in his or her plan that identifies—

(1) Procedures and strategies for responding to a worst case discharge of other non-petroleum oils to the maximum extent practicable; and

(2) Sources of the equipment and supplies necessary to locate, recover, and mitigate such a discharge.

(b) An owner or operator of a facility that handles, stores, or transports other non-petroleum oils must ensure that any equipment identified in a response plan is capable of operating in the conditions expected in the geographic area(s) in which the facility operates using the criteria in Table 1 of appendix C of this part. When evaluating the operability of equipment, the facility owner or operator must consider limitations that are identified in the ACPs for the COTP zone in which the facility is located, including—

(1) Ice conditions;

(2) Debris;

(3) Temperature ranges; and

(4) Weather-related visibility.

(c) The owner or operator of a facility that handles, stores, or transports other non-petroleum oils must identify the response resources that are available by contract or other approved means as described in §154.1028(a). The equipment identified in a response plan must include—

(1) Containment boom, sorbent boom, or other methods for containing oil floating on the surface or to protect shorelines from impact;

(2) Oil recovery devices appropriate for the type of other non-petroleum oils handled; and

(3) Other appropriate equipment necessary to respond to a discharge involving the type of oil handled.

(d) Response resources identified in a response plan under paragraph (c) of this section must be capable of commencing an effective on-scene response within the times specified in this paragraph for the applicable operating area:

	Tier 1 (hrs.)	Tier 2	Tier 3
Higher volume port area	6	N/A	N/A
Great Lakes	12	N/A	N/A
All other river and canal, inland, nearshore, and offshore areas	12	N/A	N/A

(e) A response plan for a facility that handles, stores, or transports other non-petroleum oils must identify response resources with firefighting capability. The owner or operator of a facility that does not have adequate firefighting resources located at the facility or that cannot rely on sufficient local firefighting resources must identify and ensure, by contract or other approved means as described in §154.1028(a), the availability of adequate firefighting resources. The response plan must also identify an individual located at the facility to work with the fire department on other non-petroleum oil fires. This individual shall also verify that sufficient well-trained firefighting resources are available within a reasonable response time to a worst case scenario. The individual may be the qualified individual as defined in §154.1020 and identified in the response plan or another appropriate individual located at the facility.

(f) The response plan for a facility that is located in any environment with year-round preapproval for use of dispersants and that handles, stores, or transports other non-petroleum oils may request a credit for up to 25 percent of the worst case planning volume set forth by subpart F of this part. To receive this credit, the facility owner or operator must identify in the plan and ensure, by contract or other approved means as described in §154.1028(a), the availability of specified resources to apply the dispersants and to monitor their effectiveness. The extent of the credit will be based on the volumes of the dispersant available to sustain operations at the manufacturers' recommended dosage rates. Identification of these resources does not imply that they will be authorized for use. Actual authorization for use during a spill response will be governed by the provisions of the NCP and the applicable ACP.

Appendix A to Part 154—Guidelines for Detonation Flame Arresters

top

This appendix contains the draft ASTM standard for detonation flame arresters. Devices meeting this standard will be accepted by the Commandant (CG–522).

1. *Scope*

1.1 This standard provides the minimum requirements for design, construction, performance and testing of detonation flame arresters.

2. *Intent*

2.1 This standard is intended for detonation flame arresters protecting systems containing vapors of flammable or combustible liquids where vapor temperatures do not exceed 60 °C. For all tests, the test media defined in 14.1.1 can be used except where detonation flame arresters protect systems handling vapors with a maximum experimental safe gap (MESG) below 0.9 millimeters. Detonation flame arresters protecting such systems must be tested with appropriate media (the same vapor or a media having a MESG no greater than the vapor). Various gases and their respective MESG are listed in attachment 1.

2.2 The tests in this standard are intended to qualify detonation flame arresters for all in-line applications independent of piping configuration provided the operating pressure is equal to or less than the maximum operating pressure limit specified in the manufacturer's certification and the diameter of the piping system in which the detonation arrester is to be installed is equal to or less than the piping diameter used in the testing.

Note: Detonation flame arresters meeting this standard as Type I devices, which are certified to be effective below 0 °C and which can sustain three stable detonations without being damaged or permanently deformed, also comply with the minimum requirements of the International Maritime Organization, Maritime Safety Committee Circular No. 373 (MSC/Circ. 373/Rev.1).

3. *Applicable Documents*

3.1 ASTM Standards[1]

[1] Footnotes appear at the end of this article.

A395 Ferritic Ductile Iron Pressure-Retaining Castings For Use At Elevated Temperatures.

F722 Welded Joints for Shipboard Piping Systems

F1155 Standard Practice for Selection and Application of Piping System Materials

3.2 ANSI Standards[2]

B16.5 Pipe Flanges and Flanged Fittings.

3.3 Other Documents

3.3.1 ASME Boiler and Pressure Vessel Code[2]

Section VIII, Division 1, Pressure Vessels

Section IX, Welding and Brazing Qualifications.

3.3.2 International Maritime Organization, Maritime Safety Committee[3]

MSC/Circ. 373/Rev. 1—Revised Standards for the Design, Testing and Locating of Devices to Prevent the Passage of Flame into Cargo Tanks in Tankers.

3.3.3 International Electrotechnical Commission[4]

Publication 79–1—Electrical Apparatus for Explosive Gas Atmospheres.

4. *Terminology*

4.1 $\Delta P/P_o$—The dimensionless ratio, for any deflagration and detonation test of 14.3, of the maximum pressure increase (the maximum pressure minus the initial pressure), as measured in the piping system on the side of the arrester where ignition begins by the device described in paragraph 14.3.3, to the initial absolute pressure in the piping system. The initial pressure should be greater than or equal to the

maximum operating pressure specified in paragraph 11.1.7.

4.2 Deflagration—A combustion wave that propagates subsonically (as measured at the pressure and temperature of the flame front) by the transfer of heat and active chemical species to the unburned gas ahead of the flame front.

4.3 Detonation—A reaction in a combustion wave propagating at sonic or supersonic (as measured at the pressure and temperature of the flame front) velocity. A detonation is stable when it has a velocity equal to the speed of sound in the burnt gas or may be unstable (overdriven) with a higher velocity and pressure.

4.4 Detonation flame arrester—A device which prevents the transmission of a detonation and a deflagration.

4.5 Flame speed—The speed at which a flame propagates along a pipe or other system.

4.6 Flame Passage—The transmission of a flame through a device.

4.7 Gasoline Vapors—A non-leaded petroleum distillate consisting essentially of aliphatic hydrocarbon compounds with a boiling range approximating 65 °C/75 °C.

5. *Classification*

5.1 The two types of detonation flame arresters covered in this specification are classified as follows:

5.1.1 Type I—Detonation flame arresters acceptable for applications where stationary flames may rest on the device.

5.1.2 Type II—Detonation flame arresters acceptable for applications where stationary flames are unlikely to rest on the device, and further methods are provided to prevent flame passage when a stationary flame occurs. One example of “further methods” is a temperature monitor and an automatic shutoff valve.

6. *Ordering Information*

6.1 Orders for detonation flame arresters under this specification shall include the following information as applicable:

6.1.1 Type (I or II).

6.1.2 Nominal pipe size.

6 1.3 Each gas or vapor in the system and the corresponding MESG.

6.1.4 Inspection and tests other than specified by this standard.

6.1.5 Anticipated ambient air temperature range.

6.1.6 Purchaser's inspection requirements (see section 10.1).

6.1.7 Description of installation.

6.1.8 Materials of construction (see section 7).

6.1.9 Maximum flow rate and the maximum design pressure drop for that maximum flow rate.

6.1.10 Maximum operating pressure.

7. *Materials*

7.1 The detonation flame arrester housing, and other parts or bolting used for pressure retention, shall be constructed of materials listed in ASTM F 1155 (incorporated by reference, see §154.106), or section VIII, Division 1 of the ASME Boiler and Pressure Vessel Code. Cast and malleable iron shall not be used; however, ductile cast iron in accordance with ASTM A395 may be used.

7.1.1 Arresters, elements, gaskets, and seals must be made of materials resistant to attack by seawater and the liquids and vapors contained in the system being protected (see section 6.1.3).

7.2 Nonmetallic materials, other than gaskets and seals, shall not be used in the construction of pressure retaining components of the detonation flame arrester.

7.2.1 Nonmetallic gaskets and seals shall be non-combustible and suitable for the service intended.

7.3 Bolting materials, other than that of section 7.1, shall be at least equal to those listed in Table 1 of ANSI B16.5.

7.4 The possibility of galvanic corrosion shall be considered in the selection of materials.

7.5 All other parts shall be constructed of materials suitable for the service intended.

8. *Other Requirements*

8.1 Detonation flame arrester housings shall be gas tight to prevent the escape of vapors.

8.2 Detonation flame arrester elements shall fit in the housing in a manner that will insure tightness of metal-to-metal contacts in such a way that flame cannot pass between the element and the housing.

8.2.1 The net free area through detonation flame arrester elements shall be at least 1.5 times the cross-sectional area of the arrester inlet.

8.3 Housings, elements, and seal gasket materials shall be capable of withstanding the maximum and minimum pressures and temperatures to which the device may be exposed under both normal and the specified fire test conditions in section 14, and shall be capable of withstanding the hydrostatic pressure test of section 9.2.3.

8.4 Threaded or flanged pipe connections shall comply with the applicable B16 standards in ASTM F 1155 (incorporated by reference, see §154.106). Welded joints shall comply with ASTM F 722 (incorporated by reference, see §154.106).

8.5 All flat joints of the housing shall be machined true and shall provide for a joint having adequate metal-to-metal contact.

8.6 Where welded construction is used for pressure retaining components, welded joint design details, welding and non-destructive testing shall be in accordance with Section VIII, Division 1, of the ASME Code and ASTM F 722 (incorporated by reference, see §154.106). Welders and weld procedures shall be qualified in accordance with section IX of the ASME Code.

8.7 The design of detonation flame arresters shall allow for ease of inspection and removal of internal elements for replacement, cleaning or repair without removal of the entire device from the system.

8.8 Detonation flame arresters shall allow for efficient drainage of condensate without impairing their efficiency to prevent the passage of flame. The housing may be fitted with one or more drain plugs for this purpose. The design of a drain plug should be such so that by cursory visual inspection it is obvious whether the drain has been left open.

8.9 All fastenings shall be protected against loosening.

8.10 Detonation flame arresters shall be designed and constructed to minimize the effect of fouling under normal operating conditions.

8.11 Detonation flame arresters shall be capable of operating over the full range of ambient air temperatures anticipated.

8.12 Detonation flame arresters shall be of first class workmanship and free from imperfections which may affect their intended purpose.

8.13 Detonation flame arresters shall be tested in accordance with section 9.

9. *Tests*

9.1 Tests shall be conducted by an independent laboratory capable of performing the tests. The

manufacturer, in choosing a laboratory, accepts that it is a qualified independent laboratory by determining that it has (or has access to) the apparatus, facilities, personnel, and calibrated instruments that are necessary to test detonation flame arresters in accordance with this standard.

9.1.1 A test report shall be prepared by the laboratory which shall include:

9.1.1.1 Detailed drawings of the detonation flame arrester and its components (including a parts list identifying the materials of construction).

9.1.1.2 Types of tests conducted and results obtained. This shall include the maximum temperature reached and the length of testing time in section 14.2 in the case of Type II detonation flame arresters.

9.1.1.3 Description of approved attachments (reference 9.2.6).

9.1.1.4 Types of gases or vapors for which the detonation flame arrester is approved.

9.1.1.5 Drawings of the test rig.

9.1.1.6 Record of all markings found on the tested detonation flame arrester.

9.1.1.7 A report number.

9.2 One of each model Type I and Type II detonation flame arrester shall be tested. Where approval of more than one size of a detonation flame arrester model is desired, only the largest and smallest sizes need be tested provided it is demonstrated by calculation and/or other testing that intermediate size devices have equal or greater strength to withstand the force of a detonation and have equivalent detonation arresting characteristics. A change of design, material, or construction which may affect the corrosion resistance, or ability to resist endurance burning, deflagrations or detonations shall be considered a change of model for the purpose of this paragraph.

9.2.1 The detonation flame arrester shall have the same dimensions, configuration, and most unfavorable clearances expected in production units.

9.2.2 A corrosion test shall be conducted. In this test, a complete detonation flame arrester, including a section of pipe similar to that to which it will be fitted, shall be exposed to a 20% sodium chloride solution spray at a temperature of 25 °C for a period of 240 hours, and allowed to dry for 48 hours. Following this exposure, all movable parts shall operate properly and there shall be no corrosion deposits which cannot be washed off.

9.2.3 The detonation flame arrester shall be subjected to a hydrostatic pressure test of at least 350 psig for ten minutes without rupturing, leaking, or showing permanent distortion.

9.2.4 Flow characteristics as declared by the manufacturer, shall be demonstrated by appropriate tests.

9.2.5 Detonation flame arresters shall be tested for endurance burn and deflagration/detonation in accordance with the test procedures in section 14. Type I detonation flame arresters shall show no flame passage when subjected to both tests. Type II detonation flame arresters shall show no evidence of flame passage during the detonation/deflagration tests in section 14.3. Type II detonation flame arresters shall be tested for endurance burn in accordance with section 14.2. From the endurance burn test of a Type II detonation flame arresters, the maximum temperature reached and the test duration shall be recorded and provided as part of the laboratory test report.

9.2.6 Where a detonation flame arrester is provided with cowls, weather hoods and deflectors, etc., it shall be tested in each configuration in which it is provided.

9.2.7 Detonation flame arresters which are provided with a heating arrangement designed to maintain the surface temperature of the device above 85 °C shall pass the required tests at the maximum heated operating temperature.

9.2.8 Each finished detonation arrester shall be pneumatically tested at 10 psig to ensure there are no defects or leakage.

10. *Inspection*

10.1 The manufacturer shall afford the purchaser's inspector all reasonable access necessary to assure that the device is being furnished in accordance with this standard. All examinations and inspections shall be made at the place of manufacture, unless otherwise agreed upon.

10.2 Each finished detonation arrester shall be visually and dimensionally checked to ensure that the device corresponds to this standard, is certified in accordance with section 11 and is marked in accordance with section 12. Special attention shall be given to the checking of welds and the proper fit-ups of joints (see sections 8.5 and 8.6).

11. *Certification*

11.1 Manufacturer's certification that a detonation flame arrester meets this standard shall be provided in an instruction manual. The manual shall include as applicable:

11.1.1 Installation instructions and a description of all configurations tested (reference paragraph 9.2.6). Installation instructions to include the device's limitations.

11.1.2 Operating instructions.

11.1.3 Maintenance requirements.

11.1.3.1 Instructions on how to determine when arrester cleaning is required and the method of cleaning.

11.1.4 Copy of test report (see section 9.1.1).

11.1.5 Flow test data, maximum temperature and time tested (Type II).

11.1.6 The ambient air temperature range over which the device will effectively prevent the passage of flame.

Note: Other factors such as condensation and freezing of vapors should be evaluated at the time of equipment specification.

11.1.7 The maximum operating pressure for which the device is suitable.

12. *Marking*

12.1 Each detonation flame arrester shall be permanently marked indicating:

12.1.1 Manufacturer's name or trademark.

12.1.2 Style, type, model or other manufacturer's designation for the detonation flame arrester.

12.1.3 Size of the inlet and outlet.

12.1.4 Type of device (Type I or II).

12.1.5 Direction of flow through the detonation flame arrester.

12.1.6 Test laboratory and report number.

12.1.7 Lowest MESG of gases that the detonation flame arrester is suitable for.

12.1.8 ASTM designation of this standard.

12.1.9 Ambient air operating temperature range.

12.1.10 Maximum operating pressure.

13. *Quality Assurance*

13.1 Detonation flame arresters shall be designed, manufactured and tested in a manner that ensures they meet the characteristics of the unit tested in accordance with this standard.

13.2 The detonation flame arrester manufacturer shall maintain the quality of the arresters that are designed, tested and marked in accordance with this standard. At no time shall a detonation flame arrester be sold with this standard designation that does not meet the requirements herein.

14. *Test Procedures for Detonation Arresters*

14.1 *Media/Air Mixtures*

14.1.1 For vapors from flammable or combustible liquids with a MESG greater than or equal to 0.9 mm, technical grade hexane or gasoline vapors shall be used for all tests in this section except technical grade propane may be used for the deflagration/detonation tests in section 14.3. For vapors with a MESG less than 0.9 mm, the specific vapor (or alternatively, a media with a MESG less than or equal to the MESG of the vapor) must be used as the test medium in all Section 14 tests.

14.1.2 Hexane, propane, gasoline and other test vapors shall be mixed with air to form the most easily ignitable mixture.[5]

14.2 *Endurance Burn Test Procedure*

14.2.1 An endurance burning test shall be carried out as follows:

14.2.1.1 The test rig shall consist of an apparatus producing an explosive mixture, a small tank with a diaphragm, a prototype of the detonation flame arrester and a firing source in close proximity to the test device (see Figure 1). The detonation flame arrester shall be installed so that the mixture emission is vertically upwards, or installed in the position for which it is designed and which will cause the most severe heating of the device under the prescribed endurance burn conditions. In this position the mixture shall be ignited.

14.2.1.2 Endurance burn test shall start by using the most easily ignitable test vapor/air mixture with the aid of a pilot flame or a spark igniter at the outlet. The flammable mixture may be reignited as necessary in the course of the endurance burn.

14.2.1.3 Temperature measurement will be performed on the surface of the arrester element half way between the center and its edge.

14.2.1.4 By varying the proportions of the flammable mixture and the flow rate, the detonation flame arrester shall be heated by a stable flame on the surface of the arrester until the highest obtainable temperature is reached on the ignited side or until the temperature on the side which was not ignited (protected side) rises 100 °C.

14.2.1.5 The flammable mixture proportions will then be varied again until the conditions which result in the highest temperature on the protected side are achieved. This temperature shall be maintained for a period of ten minutes, after which the flow shall be stopped and the conditions observed. The highest attainable temperature is considered to have been reached when any subsequent rise of temperature does not exceed 0.5°C per minute over a ten minute period.

14.2.1.6 If difficulty arises in establishing the highest attainable temperature on the protected side, the following criteria shall apply. When the increase in temperature on the protected side occurs so slowly that its temperature does not rise 100 °C, the conditions which produced the highest temperature on the ignited side of the arrester will be maintained for two hours. For the condition in which the temperature on the protected side continues to rise at a rate in excess of 0.5 °C per minute for a 10 minute period, endurance burning shall be continued, using the most severe conditions of flammable mixtures and flow rate, for a period of two hours. In either of these cases, at the end of the two hour period, the flow shall be stopped and the conditions observed. The two hour interval shall be measured commencing with the setting of the conditions which produced the most severe conditions of mixture and flow rate. For Type I detonation flame arresters, flame passage shall not occur during this test. For Type II detonation flame arresters, the maximum temperature obtained, and the time elapsed from the time when the most severe conditions are set to when flame passage occurs, shall be recorded. However, for Type II detonation flame arresters the test may be terminated 15 minutes after setting the most severe conditions on the protected side.

14.3 *Deflagration/Detonation Test Procedure*

14.3.1 A detonation flame arrester shall be installed at one end of a pipe of the same diameter as the inlet of the detonation flame arrester (see Figure 2). The length and configuration of the test pipe shall develop a stable detonation[6] at the device and shall be capable, by change in its length or configuration, of developing deflagrations and unstable (overdriven) detonations as measured on the side of the pipe where ignition occurs (run-up side). For deflagration testing, two test piping arrangements shall be used on the outlet side of the detonation flame arrester (the side which is not ignited). In both of the following end arrangements, the outlet side pipe diameter shall be equal to that on the run-up side. In one arrangement, the outlet side pipe shall be at least 10 pipe diameters long with a plastic bag over the free end. (Alternate end of pipe closures are also acceptable provided they easily give way during the course of the test, and the closure allows the required gas concentration to be maintained throughout the test

piping arrangement.) In the other arrangement the outlet side pipe shall be fitted with a restriction located 0.6 meters from the outlet side arrester flange. The size of the restriction for each nominal size detonation flame arrester shall be as follows:

Nominal pipe diameter (inches)	Restriction diameter (inches)
3	1/2
4	1/2
6	1
8	1 1/2
10	1 1/2
12	2
18	2
24	2

The entire pipe shall be filled with the most easily ignitable vapor/air mixture to a test pressure corresponding to or greater than the upper limit of the device's maximum operating pressure (see 11.1.7). In order to obtain this test pressure, a device such as a bursting disc may be fitted on the open end of the device in place of the plastic bag. The concentration of the mixture should be verified by appropriate testing of the gas composition. The vapor/air mixture shall then be ignited.

14.3.2 Flame speeds shall be measured by optical devices capable of providing accuracy of ±5%. These devices shall be situated no more than a distance equal to 3% of the length of the run-up pipe apart with one device no more than 8 inches from the end of the test pipe to which the detonation flame arrester is attached. In addition, each outlet arrangement described in paragraph 14.3.1 shall be fitted with an optical device located no more than 8 inches from the detonation flame arrester outlet.[7]

14.3.3 Explosion pressures within the pipe shall be measured by a high frequency transducer situated in the test pipe no more than 8 inches from the run-up side of the housing of the detonation flame arrester.

14.3.4 Using the first end arrangement (10 pipe diameter outlet) described in paragraph 14.3.1, a series of tests shall be conducted to determine the test pipe length and configuration that results in the maximum unstable (overdriven) detonation having the maximum measured flame speed at the detonation flame arrester. (These tests may also be carried out using a single length of pipe with igniters spaced at varying distances from the arrester.) The flame speeds, explosion pressures and test pipe configurations shall be recorded for each of these tests. The piping configuration that resulted in the highest recorded unstable (overdriven) detonation flame speed shall be used, and the device shall be subjected to at least four additional unstable (overdriven) detonations. In the course of testing, the device shall also demonstrate its ability to withstand five stable detonations, five deflagrations (as determined by flame speed) where $\Delta P/P_o$ was less than 1 and five deflagrations (as determined by flame speed) where $\Delta P/P_o$ was greater than 1 but less than 10. Initiation of deflagrations shall be at several locations to generate a range for $\Delta P/P_o$. Deflagration tests using the restricted outlet arrangement described in paragraph 14.3.1 shall then be conducted. In these tests the device shall demonstrate its ability to stop five deflagrations (as determined by flame speed) generated by the same configurations which resulted in $\Delta P/P_o$ being less than 1 during the deflagration tests which were conducted without the restricted end arrangements, and five deflagrations (as determined by flame speed) generated by the same configurations which resulted in $\Delta P/P_o$ being greater than 1 but less than 10 during the deflagration tests which were conducted without the restricted end arrangements. No evidence of flame passage shall occur during these tests. The flame speeds and explosion pressures for each of these tests shall be recorded.

14.3.5 A device that successfully passes the tests of 14.3.4 shall be considered to be directional (suitable for arresting a detonation advancing only from the direction as tested) except;

14.3.5.1 A device may be tested according to 14.3.4 for detonations approaching from either direction, or

14.3.5.2 The design of the device is symmetrical where each end may be considered to be identical when approached by a detonation from either direction.

[1] Available from the American Society for Testing and Materials (ASTM), 100 Barr Harbor Dr., West Conshohocken, PA 19428–2959.

[2] Available from the American Society of Mechanical Engineers International, Three Park Avenue, New York, NY 10016–5990.

[3] Available from the International Maritime Organization, 4 Albert Embankment, London SE1 7SR, England.

[4] Available from the International Electrotechnical Commission, 1 rue de Varembe, Geneva, Switzerland.

[5] See IEC Publication 79–1.

[6] Some data are available for the estimation of flame speeds in horizontal pipes without detonation flame arresters. Some data indicate that the presence of small obstacles, fittings or bends in the test pipe can accelerate the flame speeds appreciably.

[7] Other pressure and/or flame speed measuring techniques may be used if effective.

FIGURE 1

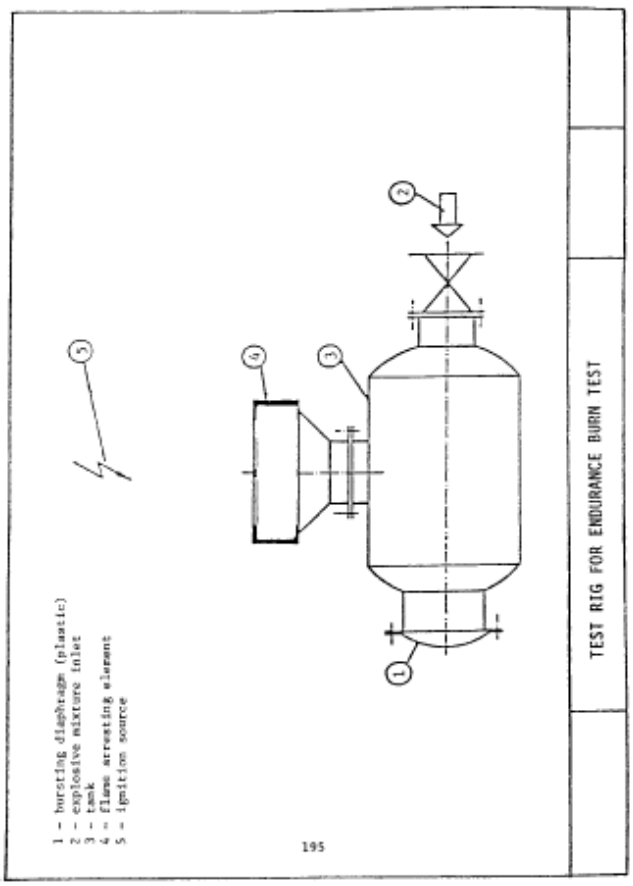

View or download PDF

Figure 2

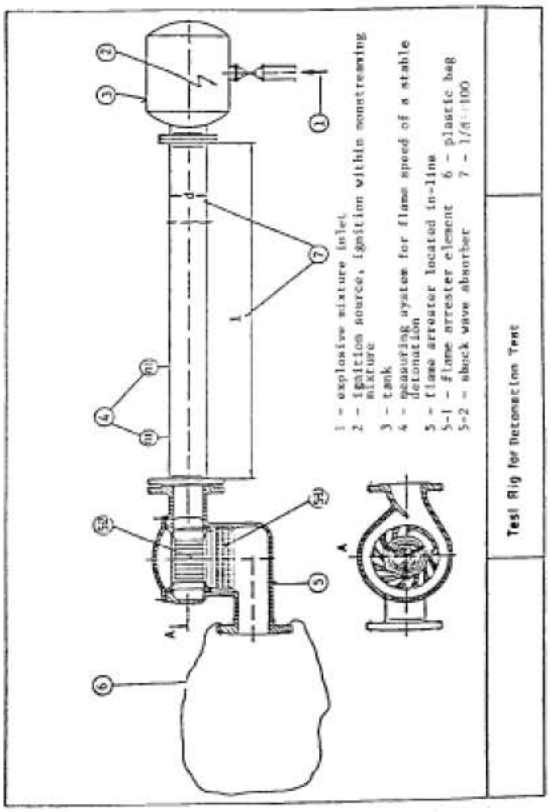

View or download PDF

Attachment 1

Inflammable gas or vapour	Experimental maximum safe gap	
	mm	in.
Methane	1.170	0.046
Blast furnace gas	1.193	0.047
Propane	0.965	0.038
Butane	1.066	0.042
Pentane	1.016	0.040
Hexane	0.965	0.038
Heptane	0.965	0.038
Iso-octane	1.040	0.041
Decane	1.016	0.040
Benzene	0.99	0.039
Xylene	1.066	0.042
Cyclohexane	0.94	0.037
Acetone	1.016	0.040
Ethylene	0.71	0.028
Methyl-ethyl-ketone	1.016	0.040
Carbon monoxide	0.915	0.036
Methyl-acetate	0.990	0.039
Ethyl-acetate	1.04	0.041

Propyl-acetate	1.04	0.041
Butyl-acetate	1.016	0.040
Amyl-acetate	0.99	0.039
Methyl alcohol	0.915	0.036
Ethyl alcohol	1.016	0.040
Iso-butyl-alcohol	0.965	0.038
Butyl-alcohol (Normal)	0.94	0.037
Amyl-alcohol	0.99	0.039
Ethyl-ether	0.864	0.034
Coal gas ($H_2$57%)	0.482	0.019
Acetylene	≤0.025	≤0.001
Carbon disulphide	0.203	0.008
Hydrogen	0.102	0.004
Blue water gas ($H_2$53% CO 47%)	0.203	0.008
Ethyl nitrate	≤0.025	≤0.001
Ammonia	[1]3.33	[1]0.133
Ethylene oxide	0.65	0.026
Ethyl nitrite	0.922	0.038

[1]Approximately.

[CGD 88–102, 55 FR 25435, June 21, 1990; 55 FR 39270, Sept. 26, 1990, as amended by CGD 96–026, 61 FR 33666, June 28, 1996; USCG–1999–5832, 64 FR 34715, June 29, 1999; USCG–2000–7223, 65 FR 40058, June 29, 2000; USCG–2010–0351, 75 FR 36284, June 25, 2010]

Appendix B to Part 154—Standard Specification for Tank Vent Flame Arresters

top

1. *Scope*

1.1 This standard provides the minimum requirements for design, construction, performance and testing of tank vent flame arresters.

2. *Intent*

2.1 This standard is intended for flame arresters protecting systems containing vapors of flammable or combustible liquids with a flashpoint that does not exceed 60 °C. The test media defined in 14.1.1 can be used except where arresters protect systems handling vapors with a maximum experimental safe gap (MESG) below 0.9 millimeters. Flame arresters protecting such systems must be tested with appropriate media (the same vapor or a media having a MESG no greater than the vapor). Various gases and their respective MESG are listed in Attachment 1.

Note: Flame arresters meeting this standard also comply with the minimum requirements of the International Maritime Organization, Maritime Safety Committee Circular No. 373 (MSC/Circ. 373/Rev. 1).

3. *Applicable Documents*

3.1 ASTM Standards[1] F722 Welded Joints for Shipboard Piping Systems; F1155 Standard Practice for Selection and Application of Piping System Materials

[1] Footnotes appear at the end of this article.

3.2 ANSI Standards[2] B16.5 Pipe Flanges and Flanged Fittings.

3.3 Other Documents

3.3.1 ASME Boiler and Pressure Vessel Code[2] section VIII, Division 1, Pressure Vessels; section IX, Welding and Brazing Qualifications.

3.3.2 International Maritime Organization, Maritime Safety Committee[3] MSC/Circ. 373/Rev. 1—Revised Standards for the Design, Testing and Locating of Devices to Prevent the Passage of Flame into Cargo Tanks in Tankers.

3.3.3 International Electrotechnical Commission[4] Publication 79.1—Electrical Apparatus for Explosive Gas Atmospheres.

4. *Terminology*

4.1 Flame arrester—A device to prevent the passage of flame in accordance with a specified performance standard. Its flame arresting element is based on the principle of quenching.

4.2 Flame speed—The speed at which a flame propagates along a pipe or other system.

4.3 Flame Passage—The transmission of a flame through a flame arrester.

4.4 Gasoline Vapors—A non-leaded petroleum distillate consisting essentially of aliphatic hydrocarbon compounds with a boiling range approximating 65 °C/75 °C.

5. *Classification*

5.1 The two types of flame arresters covered in this specification are classified as follows:

5.1.1 Type I—Flame arresters acceptable for end-of-line applications.

5.1.2 Type II—Flame arresters acceptable for in-line applications.

6. *Ordering Information*

6.1 Orders for flame arresters under this specification shall include the following information as applicable:

6.1.1 Type (I or II).

6.1.2 Nominal pipe size.

6.1.3 Each gas or vapor in the tank being protected by the flame arrester, and the corresponding MESG.

6.1.4 Inspection and tests other than specified by this standard.

6.1.5 Anticipated ambient air temperature range.

6.1.6 Purchaser's inspection requirements (see section 10.1).

6.1.7 Description of installation (distance and configuration of pipe between the arrester, and the atmosphere or potential ignition source) (see section 9.2.4.2).

6.1.8 Materials of construction (see section 7).

6.1.9 Maximum flow rate and the design pressure drop for that maximum flow rate.

7. *Materials*

7.1 The flame arrester housing, and other parts or bolting used for pressure retention, shall be constructed of materials listed in ASTM F 1155 (incorporated by reference, see §154.106), or section VIII, Division 1 of the ASME Boiler and Pressure Vessel Code.

7.1.1 Arresters, elements, gaskets, and seals must be of materials resistant to attack by seawater and

the liquids and vapors contained in the tank being protected (see section 6.1.3).

7.2 Nonmetallic materials, other than gaskets and seals, shall not be used in the construction of pressure retaining components of the flame arrester.

7.2.1 Nonmetallic gaskets and seals shall be non-combustible and suitable for the service intended.

7.3 Bolting materials, other than that of Section 7.1, shall be at least equal to those listed in Table 1 of ANSI B16.5.

7.4 The possibility of galvanic corrosion shall be considered in the selection of materials.

7.5 All other parts shall be constructed of materials suitable for the service intended.

8. *Other Requirements*

8.1 Flame arrester housings shall be gas tight to prevent the escape of vapors.

8.2 Flame arrester elements shall fit in the housing in a manner that will insure tightness of metal-to-metal contacts in such a way that flame cannot pass between the element and the housing.

8.2.1 The net free area through flame arrester elements shall be at least 1.5 times the cross-sectional area of the arrester inlet.

8.3 Housings and elements shall be of substantial construction and designed for the mechanical and other loads intended during service. In addition, they shall be capable of withstanding the maximum and minimum pressures and temperatures to which the device may be exposed under both normal and the specified fire test conditions in section 14.

8.4 Threaded or flanged pipe connections shall comply with the applicable B16 standards in ASTM F 1155 (incorporated by reference, see §154.106). Welded joints shall comply with ASTM F 722 (incorporated by reference, see §154.106).

8.5 All flat joints of the housing shall be machined true and shall provide for a joint having adequate metal-to-metal contact.

8.6 Where welded construction is used for pressure retaining components, welded joint design details, welding and non-destructive testing shall be in accordance with section VIII, Division 1, of the ASME Code and ASTM F 722 (incorporated by reference, see §154.106). Welders and weld procedures shall be qualified in accordance with section IX of the ASME Code.

8.7 The design of flame arresters shall allow for ease of inspection and removal of internal elements for replacement, cleaning or repair without removal of the entire device from the system.

8.8 Flame arresters shall allow for efficient drainage of condensate without impairing their efficiency to prevent the passage of flame.

8.9 All fastenings shall be protected against loosening.

8.10 Flame arresters shall be designed and constructed to minimize the effect of fouling under normal operating conditions.

8.11 Flame arresters shall be capable of operating over the full range of ambient air temperatures anticipated.

8.12 End-of-line flame arresters shall be so constructed as to direct the efflux vertically upward.

8.13 Flame arresters shall be of first class workmanship and free from imperfections which may affect their intended purpose.

8.14 Tank vent flame arresters shall show no flame passage when subjected to the tests in 9.2.4.

9. *Prototype Tests*

9.1 Tests shall be conducted by an independent laboratory capable of performing the tests. The manufacturer, in choosing a laboratory, accepts that it is a qualified independent laboratory by

determining that it has (or has access to) the apparatus, facilities, personnel, and calibrated instruments that are necessary to test flame arresters in accordance with this standard.

9.1.1 A test report shall be prepared by the laboratory which shall include:

9.1.1.1 Detailed drawings of the flame arrester and its components (including a parts list identifying the materials of construction).

9.1.1.2 Types of tests conducted and results obtained.

9.1.1.3 Specific advice on approved attachments (see section 9.2.4.1).

9.1.1.4 Types of gases or vapors for which the flame arrester is approved (see section 6.1.3).

9.1.1.5 Drawings of the test rig.

9.1.1.6 Record of all markings found on the tested flame arrester.

9.1.1.7 A report number.

9.2 One of each model Type I and Type II flame arrester shall be tested. Where approval of more than one size of a flame arrester model is desired, the largest and smallest sizes shall be tested. A change of design, material, or construction which may affect the corrosion resistance, endurance burn, or flashback capabilities of the flame arrester shall be considered a change of model for the purpose of this paragraph.

9.2.1 The flame arrester shall have the same dimensions, configuration, and the most unfavorable clearances expected in production units.

9.2.2 A corrosion test shall be conducted. In this test, a complete arrester, including a section of pipe similar to that to which it will be fitted, shall be exposed to a 20% sodium chloride solution spray at a temperature of 25 degrees C for a period of 240 hours, and allowed to dry for 48 hours. Following this exposure, all movable parts shall operate properly and there shall be no corrosion deposits which cannot be washed off.

9.2.3 Performance characteristics as declared by the manufacturer, such as flow rates under both positive and negative pressure, operating sensitivity, flow resistance, and velocity, shall be demonstrated by appropriate tests.

9.2.4 Tank vent flame arresters shall be tested for endurance burn and flashback in accordance with the test procedures in section 14. The following constraints apply:

9.2.4.1 Where a Type I flame arrester is provided with cowls, weather hoods and deflectors, etc., it shall be tested in each configuration in which it is provided.

9.2.4.2 Type II arresters shall be specifically tested with the inclusion of all pipes, tees, bends, cowls, weather hoods, etc., which may be fitted between the arrester and the atmosphere.

9.2.5 Devices which are provided with a heating arrangement shall pass the required tests at the heated temperature.

9.2.6 After all tests are completed, the device shall be disassembled and examined, and no part of the device shall be damaged or show permanent deformation.

10. *Inspection*

10.1 The manufacturer shall afford the purchaser's inspector all reasonable facilities necessary to assure that the material is being furnished in accordance with this standard. All examinations and inspections shall be made at the place of manufacture, unless otherwise agreed upon.

10.2 Each finished flame arrester shall be visually and dimensionally checked to ensure that the device corresponds to this standard, is certified in accordance with section 11 and is marked in accordance with section 12. Special attention shall be given to checking the proper fit-up of joints (see sections 8.5 and 8.6)

11. *Certification*

11.1 Manufacturer's certification that a flame arrester has been constructed in accordance with this standard shall be provided in an instruction manual. The manual shall include as applicable:

11.1.1 Installation instructions and a description of all configurations tested (reference paragraph 9.2.4.1 and 9.2.4.2). Installation instructions to include manufacturer's recommended limitations based on all configurations tested.

11.1.2 Operating instructions.

11.1.3 Maintenance requirements.

11.1.3.1 Instructions on how to determine when flame arrester cleaning is required and the method of cleaning.

11.1.4 Copy of test report (see section 9.1.1).

11.1.5 Flow test data, including flow rates under both positive and negative pressures, operating sensitivity, flow resistance, and velocity.

11.1.6 The ambient air temperature range over which the device will effectively prevent the passage of flame. (Note:Other factors such as condensation and freezing of vapors should be evaluated at the time of equipment specification.)

12. *Marking*

12.1 Each flame arrester shall be permanently marked indicating:

12.1.1 Manufacturer's name or trademark.

12.1.2 Style, type, model or other manufacturer's designation for the flame arrester.

12.1.3 Size of the inlet and outlet.

12.1.4 Type of device (Type I or II).

12.1.5 Direction of flow through the flame arrester.

12.1.6 Test laboratory and report number.

12.1.7 Lowest MESG of gases for which the flame arrester is suitable for.

12.1.8 Ambient air operating temperature range.

12.1.9 ASTM designation of this standard.

13. *Quality Assurance*

13.1 Flame arresters shall be designed, manufactured and tested in a manner that ensures they meet the characteristics of the unit tested in accordance with this standard.

13.2 The flame arrester manufacturer shall maintain the quality of the flame arresters that are designed, tested and marked in accordance with this standard. At no time shall a flame arrester be sold with this standard designation that does not meet the requirements herein.

14. *Test Procedures for Flame Arresters*

14.1 Media/Air Mixtures

14.1.1 For vapors from flammable or combustible liquids with a MESG greater than or equal to 0.9 mm, technical grade hexane or gasoline vapors shall be used for all tests in this section except technical grade propane may be used for the flashback test in Section 14.2. For vapors with a MESG less than 0.9 mm, the specific vapor (or alternatively, a media with a MESG less than or equal to the MESG of the vapor) must be used as the test medium in all section 14 tests.

14.1.2 Hexane, propane, gasoline and chemical vapors shall be mixed with air to form the most easily

ignitable mixture.[5]

14.2 *Flashback Test*

14.2.1 A flashback test shall be carried out as follows:

14.2.1.1 The test rig shall consist of an apparatus producing an explosive mixture, a small tank with a diaphragm, a prototype of the flame arrester, a plastic bag[6] and a firing source in three positions (see Figure 1).[7]

14.2.1.2 The tank, flame arrester assembly and the plastic bag enveloping the prototype flame arrester shall be filled so that this volume contains the most easily ignitable vapor/air mixture.[8] The concentration of the mixture should be verified by appropriate testing of the gas composition in the plastic bag. Three ignition sources shall be installed along the axis of the bag, one close to the flame arrester, another as far away as possible therefrom, and the third at the midpoint between these two. These three sources shall be fired in succession, one during each of the three tests. Flame passage shall not occur during this test.

14.2.1.3 If flame passage occurs, the tank diaphragm will burst and this will be audible and visible to the operator by the emission of a flame. Flame, heat and pressure sensors may be used as an alternative to a bursting diaphragm.

14.3 *Endurance Burn Test*

14.3.1 An endurance burning test shall be carried out as follows:

14.3.1.1 The test rig as referred to in 14.2 may be used, without the plastic bag. The flame arrester shall be so installed that the mixture emission is vertical. In this position the mixture shall be ignited.

14.3.1.2 Endurance burning shall be achieved by using the most easily ignitable test vapor/air mixture with the aid of a pilot flame or a spark igniter at the outlet. By varying the proportions of the flammable mixture and the flow rate, the arrester shall be heated until the highest obtainable temperature on the cargo tank side of the arrester is reached. The highest attainable temperature may be considered to have been reached when the rate of rise of temperature does not exceed 0.5 °C per minute over a ten minute period. This temperature shall be maintained for a period of ten minutes, after which the flow shall be stopped and the conditions observed. If difficulty arises in establishing the highest attainable temperature, the following criteria shall apply. When the temperature appears to be approaching the maximum temperature, using the most severe conditions of flammable mixtures and flow rate, but increases at a rate in excess of 0.5 °C per minute over a ten minute period, endurance burning shall be continued for a period of two hours after which the flow shall be stopped and the conditions observed. Flame passage shall not occur during this test.

[1] American Society for Testing and Materials (ASTM), 100 Barr Harbor Dr., West Conshohocken, PA 19428–2959.

[2] Available from the American Society of Mechanical Engineers International, Three Park Avenue, New York, NY 10016–5990.

[3] Available from the International Maritime Organization, 4 Albert Embankment, London SEl 7SR, England.

[4] Available from the International Electrotechnical Commission, 1 rue de Varembe, Geneva, Switzerland

[5] See IEC Publication 79–1.

[6] The dimensions of the plastic bag are dependent on those of the flame arrester. The plastic bag may have a circumference of 2 m, a length of 2.5 m and a wall thickness of .05 m.

[7] In order to avoid remnants of the plastic bag from falling back on to the flame arrester being tested after ignition of the fuel/air mixture, it may be useful to mount a coarse wire frame across the flame arrester within the plastic bag. The frame should be constructed so as not to interfere with the test result.

[8] See IEC Publication 79–1.

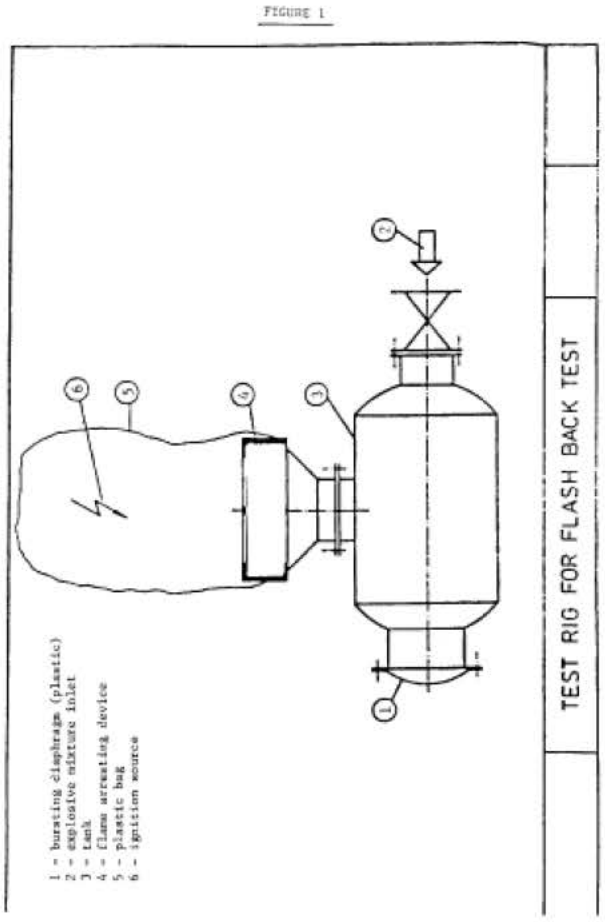

View or download PDF

Attachment 1

Inflammable gas or vapor	Experimental maximum safe gap	
	mm	in.
Methane	1.170	0.046
Blast furnace gas	1.193	0.047
Propane	0.965	0.038
Butane	1.066	0.042
Pentane	1.016	0.040
Hexane	0.965	0.038
Heptane	0.965	0.038
Iso-octane	1.040	0.041
Decane	1.016	0.040
Benzene	0.99	0.039
Xylene	1.066	0.042
Cyclohexane	0.94	0.037
Acetone	1.016	0.040
Ethylene	0.71	0.028
Methyl-ethyl-ketone	1.016	0.040
Carbon monoxide	0.915	0.036
Methyl-acetate	0.990	0.039
Ethyl-acetate	1.04	0.041

Propyl-acetate	1.04	0.041
Butyl-acetate	1.016	0.040
Amyl-acetate	0.99	0.039
Methyl alcohol	0.915	0.036
Ethyl alcohol	1.016	0.040
Iso-butyl-alcohol	0.965	0.038
Butyl-alcohol (Normal)	0.94	0.037
Amyl-alcohol	0.99	0.039
Ethyl-ether	0.864	0.034
Coal gas ($H_2$57%)	0.482	0.019
Acetylene	<0.025	<0.001
Carbon disulphide	0.203	0.008
Hydrogen	0.102	0.004
Blue water gas ($H_2$53% CO 47%)	0.203	0.008
Ethyl nitrate	<0.025	<0.001
Ammonia	[1]3.33	[1]0.133
Ethylene oxide	0.65	0.026
Ethyl nitrite	0.922	0.038

[1]Approximately.

[CGD 88–102, 55 FR 25441, June 21, 1990, as amended by USCG–1999–5832, 64 FR 34715, June 29, 1999; USCG–2000–7223, 65 FR 40058, June 29, 2000]

Appendix C to Part 154—Guidelines for Determining and Evaluating Required Response Resources for Facility Response Plans

top

1. Purpose

1.1 The purpose of this appendix is to describe the procedures for identifying response resources to meet the requirements of subpart F of this part. These guidelines will be used by the facility owner or operator in preparing the response plan and by the Captain of the Port (COTP) when reviewing them. Response resources identified in subparts H and I of this part should be selected using the guidelines in section 2 and Table 1 of this appendix.

2. Equipment Operability and Readiness

2.1 All equipment identified in a response plan must be designed to operate in the conditions expected in the facility's geographic area. These conditions vary widely based on location and season. Therefore, it is difficult to identify a single stockpile of response equipment that will function effectively in each geographic location.

2.2 Facilities handling, storing, or transporting oil in more than one operating environment as indicated in Table 1 of this appendix must identify equipment capable of successfully functioning in each operating environment.

2.3 When identifying equipment for response plan credit, a facility owner or operator must consider the inherent limitations in the operability of equipment components and response systems. The criteria in Table 1 of this appendix should be used for evaluating the operability in a given environment. These criteria reflect the general conditions in certain operating areas.

2.3.1 The Coast Guard may require documentation that the boom identified in a response plan meets the criteria in Table 1. Absent acceptable documentation, the Coast Guard may require that the boom be tested to demonstrate that it meets the criteria in Table 1. Testing must be in accordance with ASTM F 715 (incorporated by reference, see §154.106), or other tests approved by the Coast Guard.

2.4 Table 1 of this appendix lists criteria for oil recovery devices and boom. All other equipment necessary to sustain or support response operations in the specified operating environment must be designed to function in the same conditions. For example, boats which deploy or support skimmers or boom must be capable of being safely operated in the significant wave heights listed for the applicable operating environment.

2.5 A facility owner or operator must refer to the applicable local contingency plan or ACP, as appropriate, to determine if ice, debris, and weather-related visibility are significant factors in evaluating the operability of equipment. The local contingency plan or ACP will also identify the average temperature ranges expected in the facility's operating area. All equipment identified in a response plan must be designed to operate within those conditions or ranges.

2.6 The requirements of subparts F, G, H and I of this part establish response resource mobilization and response times. The distance of the facility from the storage location of the response resources must be used to determine whether the resources can arrive on scene within the stated time. A facility owner or operator shall include the time for notification, mobilization, and travel time of response resources identified to meet the maximum most probable discharge and Tier 1 worst case discharge response time requirements. For subparts F and G, tier 2 and 3 response resources must be notified and mobilized as necessary to meet the requirements for arrival on scene in accordance with §§154.1045 or 154.1047 of subpart F, or §154.1135 of subpart G, as appropriate. An on water speed of 5 knots and a land speed of 35 miles per hour is assumed unless the facility owner or operator can demonstrate otherwise.

2.7 For subparts F and G, in identifying equipment, the facility owner or operator shall list the storage location, quantity, and manufacturer's make and model. For oil recovery devices, the effective daily recovery capacity, as determined using section 6 of this appendix must be included. For boom, the overall boom height (draft plus freeboard) should be included. A facility owner or operator is responsible for ensuring that identified boom has compatible connectors.

2.8 For subparts H and I, in identifying equipment, the facility owner or operator shall list the storage location, quantity, and manufacturer's make and model. For boom, the overall boom height (draft plus freeboard) should be included. A facility owner or operator is responsible for ensuring that identified boom has compatible connectors.

3. Determining Response Resources Required for the Average Most Probable Discharge

3.1 A facility owner or operator shall identify sufficient response resources available, through contract or other approved means as described in §154.1028(a), to respond to the average most probable discharge. The equipment must be designed to function in the operating environment at the point of expected use.

3.2 The response resources must include:

3.2.1 1,000 feet of containment boom or two times the length of the largest vessel that regularly conducts oil transfers to or from the facility, whichever is greater, and a means deploying it available at the spill site within 1 hour of the discovery of a spill.

3.2.2 Oil recovery devices with an effective daily recovery capacity equal to the amount of oil discharged in an average most probable discharge or greater available at the facility within 2 hours of the detection of an oil discharge.

3.2.3 Oil storage capacity for recovered oily material indicated in section 9.2 of this appendix.

4. Determining Response Resources Required for the Maximum Most Probable Discharge

4.1 A facility owner or operator shall identify sufficient response resources available, by contract or other approved means as described in §154.1028(a), to respond to discharges up to the maximum most probable discharge volume for that facility. This will require response resources capable of containing and collecting up to 1,200 barrels of oil or 10 percent of the worst case discharge, whichever is less. All equipment identified must be designed to operate in the applicable operating environment specified in Table 1 of this appendix.

4.2 Oil recovery devices identified to meet the applicable maximum most probable discharge volume planning criteria must be located such that they arrive on scene within 6 hours in higher volume port areas (as defined in154.1020) and the Great Lakes and within 12 hours in all other areas.

4.3 Because rapid control, containment, and removal of oil is critical to reduce spill impact, the effective daily recovery capacity for oil recovery devices must equal 50 percent of the planning volume applicable for the facility as determined in section 4.1 of this appendix. The effective daily recovery capacity for oil recovery devices identified in the plan must be determined using the criteria in section 6 of this

appendix.

4.4 In addition to oil recovery capacity, the plan must identify sufficient quantities of containment boom available, by contract or other approved means as described in §154.1028(a), to arrive within the required response times for oil collection and containment and for protection of fish and wildlife and sensitive environments. While the regulation does not set required quantities of boom for oil collection and containment, the response plan must identify and ensure, by contract or other approved means as described in §154.1028(a), the availability of the boom identified in the plan for this purpose.

4.5 The plan must indicate the availability of temporary storage capacity to meet the guidelines of section 9.2 of this appendix. If available storage capacity is insufficient to meet this level, then the effective daily recovery capacity must be derated to the limits of the available storage capacity.

4.6 The following is an example of a maximum most probable discharge volume planning calculation for equipment identification in a higher volume port area: The facility's worst case discharge volume is 20,000 barrels. Ten percent of this is 2,000 barrels. Since this is greater than 1,200 barrels, 1,200 barrels is used as the planning volume. The effective daily recovery capacity must be 50 percent of this, or 600 barrels per day. The ability of oil recovery devices to meet this capacity will be calculated using the procedures in section 6 of this appendix. Temporary storage capacity available on scene must equal twice the daily recovery rate as indicated in section 9 of this appendix, or 1,200 barrels per day. This is the information the facility owner or operator will use to identify and ensure the availability of, through contract or other approved means as described in §154.1028(a), the required response resources. The facility owner will also need to identify how much boom is available for use.

5. Determining Response Resources Required for the Worst Case Discharge to the Maximum Extent Practicable

5.1 A facility owner or operator shall identify and ensure availability of, by contract or other approved means, as described in §154.1028(a), sufficient response resources to respond to the worst case discharge of oil to the maximum extent practicable. Section 7 of this appendix describes the method to determine the required response resources.

5.2 Oil spill response resources identified in the response plan and available through contract or other approved means, as described in §154.1028(a), to meet the applicable worst case discharge planning volume must be located such that they can arrive at the scene of a discharge within the times specified for the applicable response tiers listed in §154.1045.

5.3 The effective daily recovery capacity for oil recovery devices identified in a response plan must be determined using the criteria in section 6 of this appendix. A facility owner or operator shall identify the storage locations of all response resources that must be used to fulfill the requirements for each tier. The owner or operator of a facility whose required daily recovery capacity exceeds the applicable response capability caps in Table 5 of this appendix shall identify sources of additional equipment, their locations, and the arrangements made to obtain this equipment during a response. The owner or operator of a facility whose calculated planning volume exceeds the applicable contracting caps in Table 5 shall identify sources of additional equipment equal to twice the cap listed in Tiers 1, 2, and 3 or the amount necessary to reach the calculated planning volume, whichever is lower. The resources identified above the cap must be capable of arriving on scene not later than the Tiers 1, 2, and 3 response times in §154.1045. No contract is required. While general listings of available response equipment may be used to identify additional sources, a response plan must identify the specific sources, locations, and quantities of equipment that a facility owner or operator has considered in his or her planning. When listing Coast Guard classified oil spill removal organization(s) which have sufficient removal capacity to recover the volume above the response capability cap for the specific facility, as specified in Table 5 of this appendix, it is not necessary to list specific quantities of equipment.

5.4 A facility owner or operator shall identify the availability of temporary storage capacity to meet the requirements of section 9.2 of this appendix. If available storage capacity is insufficient to meet this requirement, then the effective daily recovery capacity must be derated to the limits of the availabile storage capacity.

5.5 When selecting response resources necessary to meet the response plan requirements, the facility owner or operator must ensure that a portion of those resources are capable of being used in close-to-shore response activities in shallow water. The following percentages of the on-water response equipment identified for the applicable geographic area must be capable of operating in waters of 6 feet or less depth:

(i) Offshore—10 percent

(ii) Nearshore/inland/Great Lakes/rivers and canals—20 percent.

5.6 In addition to oil spill recovery devices, a facility owner or operator shall identify sufficient quantities

of boom that are available, by contract or other approved means as described in §154.1028(a), to arrive on scene within the required response times for oil containment and collection. The specific quantity of boom required for collection and containment will depend on the specific recovery equipment and strategies employed. A facility owner or operator shall also identify sufficient quantities of oil containment boom to protect fish and wildlife and sensitive environments for the number of days and geographic areas specified in Table 2. Sections 154.1035(b)(4)(iii) and 154.1040(a), as appropriate, shall be used to determine the amount of containment boom required, through contract or other approved means as described in §154.1028(a), to protect fish and wildlife and sensitive environments.

5.7 A facility owner or operator must also identify, through contract or other approved means as described in §154.1028(a), the availability of an oil spill removal organization capable of responding to a shoreline cleanup operation involving the calculated volume of oil and emulsified oil that might impact the affected shoreline. The volume of oil that must be planned for is calculated through the application of factors contained in Tables 2 and 3. The volume calculated from these tables is intended to assist the facility owner or operator in identifying a contractor with sufficient resources and expertise. This planning volume is not used explicitly to determine a required amount of equipment and personnel.

6. Determining Effective Daily Recovery Capacity for Oil Recovery Devices

6.1 Oil recovery devices identified by a facility owner or operator must be identified by manufacturer, model, and effective daily recovery capacity. These rates must be used to determine whether there is sufficient capacity to meet the applicable planning critieria for the average most probable discharge, maximum most probable discharge, and worst case discharge to the maximum extent practicable.

6.2 For the purpose of determining the effective daily recovery capacity of oil recovery devices, the formula listed in section 6.2.1 of this appendix will be used. This method considers potential limitations due to available daylight, weather, sea state, and percentage of emulsified oil in the recovered material. The Coast Guard may assign a lower efficiency factor to equipment listed in a response plan if it determines that such a reduction is warranted.

6.2.1 The following formula must be used to calculate the effective daily recovery capacity:

R=T×24 hours×E

R=Effective daily recovery capacity

T=Throughout rate in barrels per hour (nameplate capacity)

E=20 percent Efficiency factor (or lower factor as determined by Coast Guard)

6.2.2 For those devices in which the pump limits the throughput of liquid, throughput rate will be calculated using the pump capacity.

6.2.3 For belt or mop type devices, the throughput rate will be calculated using the speed of the belt or mop through the device, assumed thickness of oil adhering to or collected by the device, and surface area of the belt or mop. For purposes of this calculation, the assumed thickness of oil will be 1/4 inch.

6.2.4 Facility owners or operators including oil recovery devices whose throughput is not measurable using a pump capacity or belt/mop speed may provide information to support an alternative method of calculation. This information must be submitted following the procedures in paragraph 6.3.2 of this appendix.

6.3 As an alternative to 6.2, a facility owner or operator may submit adequate evidence that a different effective daily recovery capacity should be applied for a specific oil recovery device. Adequate evidence is actual verified performance data in spill conditions or tests using ASTM F 631 (incorporated by reference, see §154.106), or an equivalent test approved by the Coast Guard.

6.3.1 The following formula must be used to calculate the effective daily recovery capacity under this alternative:

R=D×U

R=Effective daily recovery capacity

D=Average Oil Recovery Rate in barrels per hour (Item 26 in ASTM F 808; Item 13.2.16 in ASTM F 631; or actual performance data)

U=Hours per day that a facility owner or operator can document capability to operate equipment under

spill conditions. Ten hours per day must be used unless a facility owner or operator can demonstrate that the recovery operation can be sustained for longer periods.

6.3.2 A facility owner or operator proposing a different effective daily recovery rate for use in a response plan shall provide data for the oil recovery devices listed. The following is an example of these calculations:

A weir skimmer identified in a response plan has a manufacturer's rated throughput at the pump of 267 gallons per minute (gpm).

267 gpm=381 barrels per hour

R=381×24×.2=1829 barrels per day

After testing using ASTM procedures, the skimmer's oil recovery rate is determined to be 220 gpm. The facility owner of operator identifies sufficient response resources available to support operations 12 hours per day.

220 gpm=314 barrels per hour

R=314×12=3768 barrels per day

The facility owner or operator will be able to use the higher rate if sufficient temporary oil storage capacity is available. Determinations of alternative efficiency factors under paragraph 6.2 or alternative effective daily recovery capacities under paragraph 6.3 of this appendix will be made by Commandant, (CG–535), 2100 2nd St., SW., Stop 7363, Washington, DC 20593–7363. Response contractors or equipment manufacturers may submit required information on behalf of multiple facility owners or operators directly in lieu of including the request with the response plan submission.

7. Calculating the Worst Case Discharge Planning Volumes

7.1 The facility owner or operator shall plan for a response to a facility's worst case discharge. The planning for on-water recovery must take into account a loss of some oil to the environment due to evaporative and natural dissipation, potential increases in volume due to emulsification, and the potential for deposit of some oil on the shoreline.

7.2 The following procedures must be used to calculate the planning volume used by a facility owner or operator for determining required on water recovery capacity:

7.2.1 The following must be determined: The worst case discharge volume of oil in the facility; the appropriate group(s) for the type of oil handled, stored, or transported at the facility (non-persistent (Group I) or persistent (Groups II, III, or IV)); and the facility's specific operating area. Facilities which handle, store, or transport oil from different petroleum oil groups must calculate each group separately. This information is to be used with Table 2 of this appendix to determine the percentages of the total volume to be used for removal capacity planning. This table divides the volume into three categories: Oil lost to the environment; oil deposited on the shoreline; and oil available for on-water recovery.

7.2.2 The on-water oil recovery volume must be adjusted using the appropriate emulsification factor found in Table 3 of this appendix. Facilities which handle, store, or transport oil from different petroleum groups must assume that the oil group resulting in the largest on-water recovery volume will be stored in the tank or tanks identified as constituting the worst case discharge.

7.2.3 The adjusted volume is multiplied by the on-water oil recovery resource mobilization favor found in Table 4 of this appendix from the appropriate operating area and response tier to determine the total on-water oil recovery capacity in barrels per day that must be identified or contracted for to arrive on-scene with the applicable time for each response tier. Three tiers are specified. For higher volume port areas, the contracted tiers of resources must be located such that they can arrive on scene within 6, 30, and 54 hours of the discovery of an oil discharge. For all other river, inland, nearshore, offshore areas, and the Great Lakes, these tiers are 12, 36, and 60 hours.

7.2.4 The resulting on-water recovery capacity in barrels per day for each tier must be used to identify response resources necessary to sustain operations in the applicable operating area. The equipment must be capable of sustaining operations for the time period specified in Table 2 of this appendix. The facility owner or operator must identify and ensure the availability, through contract or other approved means as described in §154.1028(a), of sufficient oil spill recovery devices to provide the effective daily recovery oil recovery capacity required. If the required capacity exceeds the applicable cap specified in Table 5 of this appendix, then a facility owner or operator shall ensure, by contract or other approved means as described in §154.1028(a), only for the quantity of resources required to meet the cap, but shall identify sources of additional resources as indicated in §154.1045(m). The owner or operator of a

facility whose planning volume exceeds the cap for 1993 must make arrangements to identify and ensure the availability, through contract or other approved means as described in §154.1028(a), of the additional capacity in 1998 or 2003, as appropriate. For a facility that handles, stores, or transports multiple groups of oil, the required effective daily recovery capacity for each group is calculated before applying the cap.

7.3 The following procedures must be used to calculate the planning volume for identifying shoreline cleanup capacity:

7.3.1 The following must be determined: The worst case discharge volume of oil for the facility; the appropriate group(s) for the type of oil handled, stored, or transported at the facility (non-persistent (Group I) or persistent (Groups II, III, or IV)); and the operating area(s) in which the facility operates. For a facility storing oil from different groups, each group must be calculated separately. Using this information, Table 2 of this appendix must be used to determine the percentages of the total planning volume to be used for shoreline cleanup resource planning.

7.3.2 The shoreline cleanup planning volume must be adjusted to reflect an emulsification factor using the same procedure as described in section 7.2.2.

7.3.3 The resulting volume will be used to identify an oil spill removal organization with the appropriate shoreline cleanup capability.

7.3.4 The following is an example of the procedure described above: A facility receives oil from barges via a dock located on a bay and transported by piping to storage tanks. The facility handles Number 6 oil (specific gravity .96) and stores the oil in tanks where it is held prior to being burned in an electric generating plant. The MTR segment of the facility has six 18-inch diameter pipelines running one mile from the dock-side manifold to several storage tanks which are located in the non-transportation-related portion of the facility. Although the facility piping has a normal working pressure of 100 pounds per square inch, the piping has a maximum allowable working pressure (MAWP) of 150 pounds per square inch. At MAWP, the pumping system can move 10,000 barrels (bbls) of Number 6 oil every hour through each pipeline. The facility has a roving watchman who is required to drive the length of the piping every 2 hours when the facility is receiving oil from a barge. The facility operator estimates that it will take approximately 10 minutes to secure pumping operations when a discharge is discovered. Using the definition of worst case discharge provided in §154.1029(b)(ii), the following calculation is provided:

	bbls.
2 hrs + 0.17 hour × 10,000 bbls per hour	21,700
Piping volume = 37,322 ft^3÷ 5.6 ft^3/bbl	+6,664
Discharge volume per pipe	28,364
Number of pipelines	×6
Worst case discharge from MTR facility	170,184

To calculate the planning volumes for onshore recovery:

Worst case discharge: 170,184 bbls. Group IV oil

Emulsification factor (from Table 3): 1.4

Operating Area impacted: Inland

Planned percent oil onshore recovery (from Table 2): Inland 70%

Planning volumes for onshore recovery: Inland 170,184 ×.7 × 1.4 = 166,780 bbls.

Conclusion: The facility owner or operator must contract with a response resource capable of managing a 166,780 barrel shoreline cleanup.

To calculate the planning volumes for on-water recovery:

Worst case discharge: 170,184 bbls. Group IV oil

Emulsification factor (from Table 3): 1.4

Operating Area impacted: Inland

Planned percent oil on-water recovery (from Table 2): Inland 50%

Planning volumes for on-water recovery: Inland 170,184×.5×1.4 = 119,128 bbls.

To determine the required resources for on-water recovery for each tier, use the mobilization factors from Table 4:

	Tier 1	Tier 2	Tier 3
Inland = 119,128 bbls.	× .15	× .25	× .40
Barrels per day (pbd)	17,869	29,782	47,652

Conclusion: Since the requirements for all tiers for inland exceed the caps, the facility owner will only need to contract for 10,000 bpd for Tier 1, 20,000 bpd for Tier 2, and 40,000 bpd for Tier 3. Sources for the bpd on-water recovery resources above the caps for all three Tiers need only be identified in the response plan.

Twenty percent of the capability for Inland, for all tiers, must be capable of operating in water with a depth of 6 feet or less.

The facility owner or operator will also be required to identify or ensure, by contract or other approved means as described in §154.1028(a), sufficient response resources required under §§154.1035(b)(4) and 154.1045(k) to protect fish and wildlife and sensitive environments identified in the response plan for the worst case discharge from the facility.

The COTP has the discretion to accept that a facility can operate only a limited number of the total pipelines at a dock at a time. In those circumstances, the worst case discharge must include the drainage volume from the piping normally not in use in addition to the drainage volume and volume of oil discharged during discovery and shut down of the oil discharge from the operating piping.

8. Determining the Capability of High-Rate Response Methods

8.1. Calculate cumulative dispersant application capacity as follows:

8.1.1 A facility owner or operator must plan either for a dispersant capacity to respond to a facility's worst case discharge (WCD) of oil, or for the amount of the dispersant resource cap as required by §154.1045(i)(3) of this chapter, whichever is the lesser amount. When planning for the cumulative application capacity required, the calculations must account for the loss of some oil to the environment due to natural dissipation causes (primarily evaporation). The following procedure must be used to determine the cumulative application requirements:

8.1.2 Determine the WCD volume of oil in gallons and the appropriate oil group for the type of petroleum oil (persistent Groups II, III, and IV). For facilities with mixed petroleum oils, assume a total WCD volume using the group that constitutes the largest portion of the oil being handled or the group with the smallest natural dissipation factor;

8.1.3 Multiply the total WCD amount in gallons by the natural dissipation factor for the appropriate oil group as follows: Group II factor is 0.50; Group III is 0.30; and Group IV is 0.10. This represents the amount of oil that can be expected to be lost to natural dissipation in a nearshore environment. Subtract the oil amount lost to natural dissipation from the total WCD amount to determine the remaining oil available for treatment by dispersant application; and

8.1.4 Multiply the oil available for dispersant treatment by the dispersant-to-oil planning application ratio of 1 part dispersant to 20 parts oil (0.05). The resulting number represents the cumulative total dispersant-application capability that must be ensured available within the first 60 hours.

8.1.5(i) The following is an example of the procedure described in paragraphs 8.1.1 through 8.1.4 above: A facility with a 1,000,000 gallon WCD of crude oil (specific gravity 0.87) is located in an area with pre-authorization for dispersant use in the nearshore environment on the U.S. East Coast:

WCD: 1,000,000 gallons, Group III oil.

Natural dissipation factor for Group III: 30 percent.

General formula to determine oil available for dispersant treatment: (WCD)−[(WCD) × (natural dissipation factor)] = available oil.

E.g., 1,000,000 gal−(1,000,000 gal × .30) = 700,000 gallons of available oil.

Cumulative application capacity = Available oil × planning application ratio (1 gal dispersant/20 gals oil = 0.05).

E.g., 700,000 gal oil × (0.05) = 35,000 gallons cumulative dispersant-application capacity.

(ii) The requirements for cumulative dispersant-application capacity (35,000 gallons) for this facility's WCD is less than the overall dispersant capability for non-Gulf Coast waters required by §155.1045(i)(3) of this chapter. Because paragraph 8.1.1 of this appendix requires owners and operators to ensure the availability of the lesser of a facility's dispersant requirements for WCD or the amount of the dispersant cap provided for in §154.1045(i)(3), the facility in this example would be required to ensure the availability of 35,000 gallons of dispersant. More specifically, this facility would be required to meet the following tier requirements in §154.1045(i)(3), which total 35,000 gallons application:

Tier 1—4,125 gallons—Completed in 12 hours.

Tier 2—23,375 gallons—Completed in 36 hours.

Tier 3—7,500 gallons—Completed in 60 hours.

8.2 Determine Effective Daily Application Capacities (EDACs) for dispersant response systems as follows:

8.2.1 EDAC planning estimates for compliance with the dispersant application requirements in §154.1045(i)(3) are to be based on:

8.2.1.1 The spill occurring at the facility;

8.2.1.2 Specific dispersant application platform operational characteristics identified in the Dispersant Mission Planner 2 or as demonstrated by operational tests;

8.2.1.3 Locations of primary dispersant staging sites; and

8.2.1.4 Locations and quantities of dispersant stockpiles.

8.2.2 EDAC calculations with supporting documentation must be submitted to the NSFCC for classification as a Dispersant Oil Spill Removal Organization.

8.2.3(i) EDAC can also be calculated using the Dispersant Mission Planner 2 (DMP2). The DMP2 is a downloadable application that calculates EDAC for different dispersant response systems. It is located on the Internet at: *http://www.response.restoration.noaa.gov/spilltools.*

(ii) The DMP2 contains operating information for the vast majority of dispersant application platforms, including aircraft, both rotary and fixed wing, and vessels. The DMP2 produces EDAC estimates by performing calculations based on performance parameters of dispersant application platforms, locations of primary dispersant staging sites, home-based airport or port locations, and the facility location (for the spill site).

8.2.4 For each Captain of the Port zone where a dispersant response capability is required, the response plan must identify:

8.2.4.1 The type, number, and location of each dispersant-application platform intended for use to meet dispersant delivery requirements specified in §154.1045(i)(3) of this chapter;

8.2.4.2 The amount and location of available dispersant stockpiles to support each platform; and,

8.2.4.3 A primary staging site for each platform that will serve as its base of operations for the duration of the response.

8.3 In addition to the equipment and supplies required, a facility owner or operator must identify a source of support to conduct the monitoring and post-use effectiveness evaluation required by applicable regional plans and ACPs.

8.4 Identification of the resources for dispersant application does not imply that the use of this technique will be authorized. Actual authorization for use during a spill response will be governed by the provisions of the National Oil and Hazardous Substances Contingency Plan (40 CFR part 300) and the applicable

Local or Area Contingency Plan.

9. Additional Equipment Necessary To Sustain Response Operations

9.1 A facility owner or operator is responsible for ensuring that sufficient numbers of trained personnel and boats, aerial spotting aircraft, containment boom, sorbent materials, boom anchoring materials, and other supplies are available to sustain response operations to completion. All such equipment must be suitable for use with the primary equipment identified in the response plan. A facility owner or operator is not required to list these response resources, but shall certify their availability.

9.2 A facility owner or operator shall evaluate the availability of adequate temporary storage capacity to sustain the effective daily recovery capacities from equipment identified in the plan. Because of the inefficiencies of oil spill recovery devices, response plans must identify daily storage capacity equivalent to twice the effective daily recovery rate required on scene. This temporary storage capacity may be reduced if a facility owner or operator can demonstrate by waste stream analysis that the efficiencies of the oil recovery devices, ability to decant waste, or the availability of alternative temporary storage or disposal locations will reduce the overall volume of oily material storage requirement.

9.3 A facility owner or operator shall ensure that his or her planning includes the capability to arrange for disposal of recovered oil products. Specific disposal procedures will be addressed in the applicable ACP.

Table 1—Response Resource Operating Criteria Oil Recovery Devices

Operating environment	Significant wave height[1]	Sea State
Rivers and Canals	≤1 Foot	1
Inland	≤3 feet	2
Great Lakes	≤4 feet	2–3
Ocean	≤6 feet	3–4

BOOM				
	Use			
Boom property	Rivers and canals	Inland	Great Lakes	Ocean
Significant Wave Height[1]	≤1	≤3	≤4	≤6
Sea State	1	2	2–3	3–4
Boom height—in. (draft plus freeboard)	6–18	18–42	18–42	≤42
Reserve Buoyancy to Weight Ratio	2:1	2:1	2:1	3:1 to 4:1
Total Tensile Strength—lbs.	4,500	15–20,000	15–20,000	≤20,000
Skirt Fabric Tensile Strength—lbs	200	300	300	500
Skirt Fabric Tear Strength—lbs	100	100	100	125

[1]Oil recovery devices and boom must be at least capable of operating in wave heights up to and including the values listed in Table 1 for each operating environment.

Table 2—Removal Capacity Planning Table

Spill location	Rivers and canals	Nearshore/inland Great Lakes	Offshore
Sustainability of on-water			

oil recovery	3 Days			4 Days			6 Days		
Oil group	% Natural dissipation	% Recovered floating oil	% Oil on shore	% Natural dissipation	% Recovered floating oil	% Oil on shore	% Natural dissipation	% Recovered floating oil	% Oil on shore
1 Non-persistent oils	80	10	10	80	20	10	95	5	/
2 Light crudes	40	15	45	50	50	30	75	25	5
3 Medium crudes and fuels	20	15	65	30	50	50	60	40	20
4 Heavy crudes and fuels	5	20	75	10	50	70	50	40	30

Table 3—Emulsification Factors for Petroleum Oil Groups

Non-Persistent Oil:	
Group I	1.0
Persistent Oil:	
Group II	1.8
Group III	2.0
Group IV	1.4

Table 4—On Water Oil Recovery Resource Mobilization Factors

Operating Area	Tier 1	Tier 2	Tier 3
Rivers & Canals	.30	.40	.60
Inland/Nearshore/Great Lakes	.15	.25	.40
Offshore	.10	.165	.21

Note: These mobilization factors are for total response resources mobilized, not incremental response resources.

Table 5—Response Capability Caps by Operating Area

	Tier 1	Tier 2	Tier 3
February 18, 1993:			
All except rivers and canals, Great Lakes	10K bbls/day	20K bbls/day	40K bbls/day/
Great Lakes	5K bbls/day	10K bbls/day	20K bbls/day.
Rivers and canals	1,500 bbls/day	3,000 bbls/day	6,000 bbls/day.
February 18, 1998:			
All except rivers and canals, Great Lakes	12.5K bbls/day	25K bbls/day	50K bbls/day.
Great Lakes	6.25K bbls/day	12.3K bbls/day	25K bbls/day.

Rivers and canals	1,875 bbls/day	3,750 bbls/day	7,500 bbls/day.
February 18, 2003:			
All except rivers & canals & Great Lakes	12.5K bbls/day	25K bbls/day	50K bbls/day.
Great Lakes	6.25K bbls/day	12.3K bbls/day	25K bbls/day.
Rivers & canals	1,875 bbls/day	3,750 bbls/day	7,500 bbls/day.

Note: The caps show cumulative overall effective daily recovery capacity, not incremental increases.

TBD=To be determined.

[CGD 91–036, 61 FR 7933, Feb. 29, 1996, as amended by CGD 96–026, 61 FR 33666, June 28, 1996; USCG–1999–5151, 64 FR 67175, Dec. 1, 1999; USCG–2000–7223, 65 FR 40058, June 29, 2000; USCG–2005–21531, 70 FR 36349, June 23, 2005; USCG–2001–8661, 74 FR 45025, Aug. 31, 2009; USCG–2010–0351, 75 FR 36284, June 25, 2010]

Appendix D to Part 154—Training Elements for Oil Spill Response Plans

top

1. General

1.1 The portion of the plan dealing with training is one of the key elements of a response plan. This concept is clearly expressed by the fact that Congress, in writing OPA 90, specifically included training as one of the sections required in a vessel or facility response plan. In reviewing submitted response plans, it has been noted that the plans often do not provide sufficient information in the training section of the plan for either the user or the reviewer of the plan. In some cases, plans simply state that the crew and others will be trained in their duties and responsibilities, with no other information being provided. In other plans, information is simply given that required parties will receive the necessary worker safety training (HAZWOPER).

1.2 The training section of the plan need not be a detailed course syllabus, but it must contain sufficient information to allow the user and reviewer (or evaluator) to have an understanding of those areas that are believed to be critical. Plans should identify key skill areas and the training that is required to ensure that the individual identified will be capable of performing the duties prescribed to them. It should also describe how the training will be delivered to the various personnel. Further, this section of the plan must work in harmony with those sections of the plan dealing with exercises, the spill management team, and the qualified individual.

1.3 The material in this appendix D is not all-inclusive and is provided for guidance only.

2. Elements To Be Addressed

2.1 To assist in the preparation of the training section of a facility response plan, some of the key elements that should be addressed are indicated in the following sections. Again, while it is not necessary that the comprehensive training program for the company be included in the response plan, it is necessary for the plan to convey the elements that define the program as appropriate.

2.2 An effective spill response training program should consider and address the following:

2.2.1 Notification requirements and procedures.

2.2.2 Communication system(s) used for the notifications.

2.2.3 Procedures to mitigate or prevent any discharge or a substantial threat of a discharge of oil resulting from failure of manifold, mechanical loading arm, or other transfer equipment or hoses, as appropriate;

2.2.3.1 Tank overfill;

2.2.3.2 Tank rupture;

2.2.3.3 Piping rupture;

2.2.3.4 Piping leak, both under pressure and not under pressure, if applicable;

2.2.3.5 Explosion or fire;

2.2.3.6 Equipment failure (e.g., pumping system failure, relief valve failure, or other general equipment relevant to operational activities associated with internal or external facility transfers).

2.2.4 Procedures for transferring responsibility for direction of response activities from facility personnel to the spill management team.

2.2.5 Familiarity with the operational capabilities of the contracted oil spill removal organizations and the procedures to notify the activate such organizations.

2.2.6 Familiarity with the contracting and ordering procedures to acquire oil spill removal organization resources.

2.2.7 Familiarity with the ACP(s).

2.2.8 Familiarity with the organizational structures that will be used to manage the response actions.

2.2.9 Responsibilities and duties of the spill management team members in accordance with designated job responsibilities.

2.2.10 Responsibilities and authority of the qualified individual as described in the facility response plan and company response organization.

2.2.11 Responsibilities of designated individuals to initiate a response and supervise response resources.

2.2.12 Actions to take, in accordance with designated job responsibilities, in the event of a transfer system leak, tank overflow, or suspected cargo tank or hull leak.

2.2.13 Information on the cargoes handled by the vessel or facility, including familiarity with—

2.2.13.1 Cargo material safety data sheets;

2.2.13.2 Chemical characteristic of the cargo;

2.2.13.3 Special handling procedures for the cargo;

2.2.13.4 Health and safety hazards associated with the cargo; and

2.2.13.5 Spill and firefighting procedures for cargo.

2.2.14 Occupational Safety and Health Administration requirements for worker health and safety (29 CFR 1910.120).

3. Further Considerations

In drafting the training section of the facility response plan, some further considerations are noted below (these points are raised simply as a reminder):

3.1 The training program should focus on training provided to facility personnel.

3.2 An organization is comprised of individuals, and a training program should be structured to recognize this fact by ensuring that training is tailored to the needs of the individuals involved in the program.

3.3 An owner or operator may identify equivalent work experience which fulfills specific training requirements.

3.4 The training program should include participation in periodic announced and unannounced exercises. This participation should approximate the actual roles and responsibilities of individual specified in the plan.

3.5 Training should be conducted periodically to reinforce the required knowledge and to ensure an adequate degree of preparedness by individuals with responsibilities under the facility response plan.

3.6 Training may be delivered via a number of different means; including classroom sessions, group discussions, video tapes, self-study workbooks, resident training courses, on-the-job training, or other means as deemed appropriate to ensure proper instruction.

3.7 New employees should complete the training program prior to being assigned job responsibilities which require participation in emergency response situations.

4. Conclusion

The information in this appendix is only intended to assist response plan preparers in reviewing the content of and in modifying the training section of their response plans. It may be more comprehensive than is needed for some facilities and not comprehensive enough for others. The Coast Guard expects that plan preparers have determined the training needs of their organizations created by the development of the response plans and the actions identified as necessary to increase the preparedness of the company and its personnel to respond to actual or threatened discharges of oil from their facilities.

[CGD 91–036, 61 FR 7938, Feb. 29, 1996]

Browse Previous | Browse Next

For questions or comments regarding e-CFR editorial content, features, or design, email ecfr@nara.gov.

For questions concerning e-CFR programming and delivery issues, email webteam@gpo.gov.

Section 508 / Accessibility

APPENDIX XV

MSDS INFORMATION

This appendix contains the following:

☒ MSDS for East Storage/Splitter III Facility

❑ Other: _____

❑ Other: _____

Date of Manual Entries into this Appendix	***Comments and/or Content***

❑ If excess material from this Appendix is kept in a file instead of behind this tab, please complete the following:

Name of file: _____

Storage location: _____

Dates covered: _____

Contents: _____

MSDS INCLUDED

- Natural Gasoline
- Diesel
- Lube Oil
- Heat Transfer Fluid – Oil
- Transformer Oil
- Recoverable Oil/Used Oil

Material Safety Data Sheet

Natural Gasoline

VALERO ENERGY CORPORATION
ONE VALERO PLACE
SAN ANTONIO, TX 78221

Emergency Phone Numbers
24 Hour Emergency: 713-923-6641
Chemtrec Emergency: 800-424-9300

General Assistance
General Assistance: 337-565-0116

Section I. Product Identification and Uses

Common/Trade name	**Natural Gasoline**
Synonyms	Gasoline, Casing Head Gasoline
Chemical family	Petroleum Hydrocarbon Saturated Aliphatic Hydrocarbon Natural gasoline is a complex combination of hydrocarbons separated as a liquid from natural gas, liquids and/or natural gas condensates from which ethane, propane, butane and possible pentane have been extracted. It consists of hydrocarbons having carbon numbers predominantly in the range of C5 through C8.
DOT Proper Shipping Name	Natural Gasoline
DOT Hazard Class	DOT CLASS 3: Flammable liquid.
DOT Identification Number/Packaging Group	UN 1257 PG: II
Reportable Quantity	The RQ for: Benzene is 10 lbs. This material contains up to 5% benzene. Hexane is 5000 lbs. This material contains up to 40% hexanes.
Marine Pollutant	No

CAS#	8006-61-9
MSDS Number	502

Section II. Summary of Hazards

Danger! Contains Benzene. Cancer Hazard. Can cause kidney, liver and blood disorders.
May cause irritation to eyes, skin and respiratory system. Avoid liquid, mist and vapor contact. Harmful or fatal if swallowed. Aspiration hazard; can enter lungs and cause damage. May cause irritation or be harmful if inhaled or absorbed through the skin. Extremely flammable liquid. Vapors may explode.

Danger! Product May Contain or Release Hydrogen Sulfide. H2S is a highly toxic, highly flammable gas which can be fatal if inhaled at certain concentrations.

Section III. Hazardous Ingredients

Name	CAS No.	Concentration (%)
1) Benzene	71-43-2	5 Maximum
2) n-Hexane	110-54-3	10-20
3) Hexane (all isomers)	mixture	10-20
4) Pentane	109-66-0	20-40
5) Pentane Isomers	mixture	20-40

Continued on Next Page

Section IV. Physical Data

Boiling point	>300°F
Melting or Solid point	Not applicable
Vapor density	2.7 (Air = 1)
Solubility	Slight
Physical state and appearance	Liquid. (Light Straw Red clear liquid.)
Odor threshold	Not available.
Specific gravity	0.65 @ 60°F
Vapor pressure	12-14 psi @ 100°F
Volatility	Essentially 100%
Evaporation rate	Not available.

Odor	Gasoline
Color	Light straw. Red. Clear liquid

Section V. Fire and Explosion Data

The product is:	Flammable.
Flash points	<0°F
Flammable limits	LOWER: 1.3% UPPER: 7.6%
Auto-ignition temperature	500°F

NFPA:

Basic firefighting procedures:	Flammable Liquid. Use dry chemical, foam or carbon dioxide to extinguish the fire. Consult foam manufacturer for appropriate media, application rates and water/foam ratio. Water can be used to cool fire-exposed containers, structures and to protect personnel. If a leak or spill has not ignited, ventilate area and use water spray to disperse gas or vapor and to protect personnel attempting to stop a leak. Use water to flush spills away from sources of ignition. Do not flush down public sewers.
Fire degradation products	Combustion may produce carbon monoxide, carbon dioxide, sulfur oxides and reactive hydrocarbons (aldehydes, aromatics, etc.).
Flammability	Conditions to Avoid: Heat, sparks, open flame, static electricity or any other potential ignition sources should be avoided. Prevent vapor accumulation. Do not switch load.
Unusual fire and explosion hazards:	Dangerous when exposed to heat or flame. Vapors form flammable or explosive mixtures with air at room temperature. Vapor or gas may spread to distant ignition sources (pilot lights, welding equipment, electrical equipment, etc.) and flash back. Vapors may accumulate in low areas. Vapors may concentrate in confined areas. Flowing product can be ignited by self generated static electricity. Use adequate bonding and grounding to prevent static buildup. Runoff to sewer may cause fire or explosion hazard. Containers may explode in heat of fire. Irritating or toxic substances may be emitted upon thermal decomposition. For fires involving this material, do not enter any enclosed or confined space without proper protective equipment, which may include NIOSH approved self-contained breathing apparatus with full face mask. Clothing, rags or similar organic material contaminated with this product and stored in a closed space may undergo spontaneous combustion. Transfer to and from commonly bonded and grounded containers.

Continued on Next Page

Section VI. Reactivity Information

Stability	The product is stable.
Incompatibility	Avoid strong oxidizing agents (peroxide, dichromate, permanganate, chlorine, etc.), strong acids, caustics and halogens.
Hazardous polymerization	No.

Section VII. Health Hazard Information & Toxicology of Components

Primary routes of entry	Eye or skin contact, Ingestion, Inhalation. Target Organs: Blood forming organs, respiratory system, skin Product Listed as a Carcinogen or Potential Carcinogen by: NTP - Yes* IARC - Yes* OSHA - Yes* Other - Yes (API Studies) *Benzene which may be present in product is considered a carcinogen
TLV	**Benzene** TWA: 1 (ppm) STEL: 5 (ppm) from OSHA [1999] SKIN TWA: 0.5 (ppm) CEIL: 2.5 (ppm) from ACGIH [1999] SKIN TWA: 0.1 (ppm) ST: 1 (ppm) from NIOSH-REL [1999] SKIN IDLH: 500 (ppm) from NIOSH [1999] **n-Hexane** TWA: 500 (ppm) from OSHA-PEL [1999] TWA: 50 (ppm) from ACGIH [1999] TWA: 50 (ppm) from NIOSH-REL [1999] IDLH: 1100 (ppm) [10%LEL] from NIOSH [1999] **Hexane (all isomers)** TWA: 500 (ppm) STEL: 1000 (ppm) from ACGIH [1999] TWA: 100 (ppm) CEIL: 510 (ppm) from NIOSH-REL [1999] **Pentane** TWA: 1000 (ppm) from OSHA-PEL [1999] TWA: 600 (ppm) from ACGIH [1999] TWA: 120 (ppm) CEIL: 610 (ppm) from NIOSH-REL [1999] IDLH: 1500 (ppm) [10% LEL] from NIOSH [1999] Consult local authorities for acceptable exposure limits.
Effects and hazards of eye contact	May cause severe irritation, redness, tearing, blurred vision and conjunctivitis.
Effects and hazards of skin contact	Prolonged or repeated contact may cause moderate irritation, defatting (cracking), redness, itching, inflammation, dermatitis and possible secondary infection. High pressure skin injections are SERIOUS MEDICAL EMERGENCIES. Injury may not appear serious at first. Within a few hours, tissues will become swollen, discolored and extremely painful. See Notes to Physician section.
Effects and hazards of inhalation	Nasal and respiratory tract irritation, central nervous system effects including excitation, euphoria, contracted eye pupils, dizziness, drowsiness, blurred vision, fatigue, nausea, headache, loss of reflexes, tremors, convulsions, seizures, loss of consciousness, coma, respiratory arrest and sudden death could occur as a result of long term and/or high concentration exposure to vapors. May also cause anemia and irregular heart rhythm. Repeated or prolonged exposure may cause behavioral changes.
Effects and hazards of ingestion	This product may be harmful or fatal if swallowed. This product may cause nausea, vomiting, diarrhea and restlessness. DO NOT INDUCE VOMITING. Aspiration into the lungs can cause severe chemical pneumonitis or pulmonary edema/hemorrhage, which can be fatal. May cause gastrointestinal disturbances. Symptoms may include irritation, depression, vomiting and diarrhea. May cause harmful central nervous system effects, similar to those listed under "Inhalation".
Medical conditions aggravated by exposure	Preexisting eye, skin, heart, central nervous system and respiratory disorders may be aggravated by exposure to this product. Impaired kidney, liver and blood disorders may be aggravated by exposure to this product.
Toxicological Information	

Continued on Next Page

BENZENE is considered to be a carcinogen to humans, and may cause adverse health effects following exposure via inhalation, ingestion or dermal or eye contact. Acute inhalation of benzene by rats, mice or rabbits caused narcosis, spontaneous heart contractions (ventricular fibrillation) and death due to respiratory paralysis. Subchronic inhalation of benzene by rats produced decreased white blood cell counts, decreased bone marrow cell activity, increased red blood cell activity and cataracts. In rats, chronic inhalation or oral administration of benzene produced cancers of the liver, mouth and Zymbal gland. Acute inhalation exposure of benzene in humans has caused nerve inflammation (polyneuritis), central nervous system depression and cardiac sensitization. Chronic exposure to benzene has produced anorexia and irreversible injury to the blood forming organs. Effects include aplastic anemia and leukemia. Animal studies have demonstrated testicular effects, alterations in reproductive cycles, chromosomal aberrations, and embryo/fetotoxicity. No birth defects have been shown to occur in pregnant laboratory animals exposed to doses not toxic to the mother.

GASOLINE contains benzene, as well as n-hexane, other aromatics and certain olefins. Gasoline generally acts as an anesthetic and mucous membrane irritant. Inhalation is the most important route of occupational entry. Eye and throat irritation occur in several hours at exposures of 160 to 270 ppm, eye, nose and throat irritation and dizziness occurs at exposures of 500 to 900 ppm in one hour, mild anesthesia occurs in 30 minutes at exposures of 2000 ppm. The threshold for immediate mild toxic effect if 900 to 1000 ppm. There are reports of toxic neuritis after exposure to gasoline. Repeated exposure of laboratory animals to high concentrations of gasoline vapors has caused kidney damage and cancer in rats and cancer in mice. Gasoline was evaluated for genetic activity in assays using microbial cells, cultured mammalian cells and rat bone marrow cells. The results were all negative so gasoline was considered nonmutagenic under these conditions. Overexposure to this product or its components has been suggested as a cause of liver abnormalities in laboratory animals and humans. n-HEXANE can affect the body if it is inhaled, comes in contact with the eyes or skin, or is swallowed. Hexane vapor is a narcotic and a mild upper respiratory irritant. Polyneuropathy (peripheral nerve damage) has been reported to occur in workers exposed to hexane vapors, characterized by progressive weakness and numbness in the extremities, loss of deep tendon reflexes and reduction of motor nerve conduction velocity. Recovery ranges from no recovery to complete recovery depending upon the duration of exposure and severity of nerve damage. Concentrations of 30,000 ppm produced narcosis in mice within 30 to 60 minutes, convulsions and death occurred at 35,000 to 40,000 ppm, and at 64,000 ppm respiratory arrest was produced in 2.5 to 4.5 minutes from the start of exposure. Concentrations up to 8000 ppm produced no anesthesia. In human subjects, 2000 ppm for 10 minutes produced no effects, but 5000 ppm resulted in dizziness and a sensation of giddiness. Other investigators reported slight nausea, headache and irritation of the eyes and throat at 1400 to 1500 ppm. In industrial practice, mild narcotic symptoms such as dizziness have been observed when concentrations exceeded 1000 ppm, but not below 500 ppm.

HYDROGEN SULFIDE can affect the body if it is inhaled or if it comes into contact with the eyes, skin, nose or throat. It can also affect the body if it is swallowed. It is colorless and has the odor of rotten eggs. However, its odor cannot be used as an indication of its presence since one of the first effects of H2S exposure is the loss of the sense of smell. Inhalation of high concentrations of hydrogen sulfide, 1000 to 2000 ppm, may cause coma after a single breath and may be rapidly fatal, convulsions can also occur. Hydrogen sulfide gas is a rapidly acting systemic poison which causes respiratory paralysis with consequent asphyxia at high concentrations (500 to 1000 ppm). A case of polyneuritis and encephalopathy from one day's exposure to a concentration insufficient to cause loss of consciousness has been reported. It irritates the eyes and respiratory tract at lower concentrations (50 to 500 ppm). Pulmonary edema and bronchial pneumonia may follow prolonged exposure at concentrations exceeding 250 ppm. Exposure to concentrations of hydrogen sulfide around 50 ppm for one hour may produce rhinitis, pharyngitis, bronchitis, pneumonitis, acute conjunctivitis with pain, lacrimation and photophobia, in severe form this may progress to keratoconjunctivitis and vesiculation of the corneal epithelium. In lower concentrations, hydrogen sulfide may cause headache, fatigue, irritability, insomnia, and gastrointestinal disturbances, as well as central nervous system disturbances, causing excitation and dizziness. Repeated exposure to hydrogen sulfide results in increased susceptibility, so that eye irritation, cough and systemic effects may result from concentrations previously tolerated without any effect.

PENTANE can affect the body if it is inhaled, comes in contact with the eyes or skin, or is swallowed. The chief effects of inhalation are narcosis and irritation of the respiratory passages. Exposures of 90,000 to 120,000 ppm resulted in narcosis in animals in 5 to 6 minutes, 130,000 ppm was fatal with respiratory arrest occurring within 5 minutes of exposure. Pentane injected subcutaneously in rats produced temporary impairment of liver function and moderate neutropenia. While other aliphatic hydrocarbons produce drowsiness and mild irritation of the eyes and nose in human subjects, no symptoms resulted from exposure to pentane vapor for 10 minutes at 5000 ppm. Chronic exposure to high concentrations may lead to polyneuropathy (peripheral nerve damage), characterized by progressive weakness and numbness in the extremities, loss of deep tendon reflexes and reduction of motor nerve conduction velocity.

Toxicity to animals	LD50: Not available. LC50: Not available.
	Remark No additional remark.

Continued on Next Page

Section VIII. First Aid

Eye contact	Flush immediately with large amounts of water for at least 15 minutes. Eyelids should be held away from the eyeball to ensure thorough rinsing. Seek medical advice if pain or redness continues.
Skin contact	Wash exposed area thoroughly with soap and water. Remove contaminated clothing promptly and launder before reuse. Contaminated leather goods should be discarded. If irritation persists or symptoms described in the MSDS develop, seek medical attention. High pressure skin injections are SERIOUS MEDICAL EMERGENCIES. Get immediate medical attention.
Slight inhalation	Remove to fresh air. If breathing is difficult, ensure clear airway and administer oxygen. If not breathing, apply artificial respiration or cardiopulmonary resuscitation. Keep person warm, quiet and get medical attention.
Slight ingestion	Never give anything by mouth to an unconscious person. DO NOT induce vomiting. Aspiration of material into the lungs due to vomiting can cause chemical pneumonitis which can be fatal. Give vegetable oil or charcoal slurry to retard absorption. If spontaneous vomiting occurs, keep head below hips to prevent aspiration of liquid into lungs and monitor for breathing difficulty. SEEK IMMEDIATE MEDICAL ATTENTION. Keep person warm and quiet.
Notes to Physician	In case of ingestion, gastric lavage with activated charcoal can be used promptly to prevent absorption. Consideration should be given to the use of an intratracheal tube, to prevent aspiration. Irregular heart beat may occur, use of adrenalin is not advisable. Individuals intoxicated by the product should be hospitalized immediately, with acute and continuing attention to neurological and cardiopulmonary function. Positive pressure ventilation may be necessary. After the initial episode, individuals should be followed for changes in blood variables and the delayed appearance of pulmonary edema and chemical pneumonitis. Such patients should be followed for several days or weeks for delayed effects, including bone marrow toxicity, hepatic and renal impairment. Individuals with chronic pulmonary disease will be more seriously impaired, and recovery from inhalation exposure may be complicated. In case of skin injection, prompt debridement of the wound is necessary to minimize necrosis and tissue loss.

Section IX. Precautionary Measures

Respiratory protection	If workplace exposure limits for product or components are exceeded, NIOSH equipment should be worn. Proper respirator selection should be determined by adequately trained personnel, based on the contaminants, the degree of potential exposure and published respiratory protection factors. This equipment should be available for nonroutine and emergency use.
Eye protection	Keep away from eyes. Eye contact can be avoided by wearing safety glasses or chemical splash goggles.
Skin protection	Keep away from skin. Skin contact can be minimized by wearing protective gloves such as neoprene, nitrile-butadiene rubber, etc. and, where necessary, impervious clothing and boots. Leather goods contaminated with this product should be discarded. A source of clean water should be available in the work area for flushing eyes and skin.
Ventilation	Avoid breathing mists and vapor. Use in well ventilated area. In confined space, mechanical ventilation may be necessary to reduce vapor concentrations to levels below the allowable exposure limits.
Storage	Store in tightly closed containers in cool, dry, isolated and well ventilated area away from heat, sources of ignition and incompatible materials. Use non-sparking tools and explosion proof equipment. Ground lines, containers, and other equipment used during product transfer to reduce the possibility of a static induced spark. Do not "switch" load (load into containers which previously contained gasoline or other low flash material) because of possible accumulation of a static charge resulting in a source of ignition. Use good personal hygiene practices. After handling this product, wash hands before eating, drinking, smoking or using toilet facilities.
Precautions	Tanks, vessels or other confined spaces which have contained product should be freed of vapors before entering. The container should be checked to ensure a safe atmosphere before entry. Empty containers may contain toxic, flammable/combustible or explosive residues or vapors. Do not cut, grind, drill, weld or reuse empty containers that contained this product. Do not transfer this product to another container unless the container receiving the product is labeled with proper DOT shipping name, hazard class and other information that describes the product and its hazards.
Spill and leak procedures	If facility or operation has an "oil or hazardous substance contingency plan", activate its procedures. Stay upwind and away from spill. Wear appropriate protective equipment including respiratory protection as conditions warrant. Do not enter or stay in area unless monitoring indicates that it is safe to do so. Isolate hazard area and restrict entry to emergency crew. Extremely flammable. Review Fire and Explosion Hazard Data before proceeding with clean up. Keep all sources of ignition (flames, smoking, flares, etc.) and hot surfaces away from release. Contain spill in smallest possible area. Recover as much product as possible (e.g., by vacuuming). Stop leak if it can be done without risk. Use water spray to disperse vapors. Spilled material may be absorbed by an appropriate absorbent, and then handled in accordance with environmental regulations. Prevent spilled material from entering sewers, storm drains, other unauthorized treatment/drainage systems and natural waterways. Contact fire authorities and appropriate federal, state and local agencies. If spill of any amount is made into or upon navigable waters, the contiguous zone, or adjoining shorelines, contact the National Response Center at 800-424-8802. For highway or railway spills, contact Chemtrec at 800-424-9300.

Continued on Next Page

Waste disposal	Dispose of material in accordance with local, county, state and federal regulations. Contact state and federal regulators to determine whether the material should be classified as a hazardous waste or industrial waste and handled accordingly. Use licensed transporter and disposal facility.

Section X. Regulatory Information

SARA Title III (302, 304, 311, 312)

Section 302/304 Extremely Hazardous Substances

Hydrogen Sulfide

Section 311 Hazard Category

Acute	Chronic	Fire	Pressure	Reactive	Not Applicable
X	X	X			

SARA Title III (313)

Benzene	5%	Maximum
n-Hexane	20%	Maximum

TSCA On the TSCA inventory list.

Canada DSL On the DSL list.

California prop 65 This product contains the following ingredients for which the State of California has found to cause cancer, birth defects or other reproductive harm, which would require a warning under the statute:

Benzene, Toluene.

State Right-to-know Regulations:

Chemical Name:	State Right-to-know:
1) Benzene	CT FL IL MA NJ PA RI MI TN
2) n-Hexane	CT FL IL MA NJ PA RI TN
3) Natural Gasoline	CT FL IL LA MA NJ RI
4) Pentane	MA NJ TN

CERCLA/ SUPERFUND Comprehensive Environmental Response, Compensation, and Liability Act of 1980 (CERCLA) requires notification of the National Response Center of release of quantities of Hazardous Substances equal or greater than the reportable quantities (RQs) in 40 CFR 302.4.

OSHA Hazard Determination This material is hazardous as defined by OSHA's Hazard Communication Standard, 29 CFR 1910.1200.

Protection of Stratospheric ozone: (pursuant to section 611 of the Clean Air Act Amendments of 1990):per 40 CFR part 82, this product does not contain nor was it directly manufactured with any class I or II ozone depleting substances.

Section XI. Labeling Information

Danger! Contains Benzene. Cancer Hazard. Can cause kidney, liver and blood disorders.
May cause irritation to eyes, skin and respiratory system. Avoid liquid, mist and vapor contact. Harmful or fatal if swallowed. Aspiration hazard; can enter lungs and cause damage. May cause irritation or be harmful if inhaled or absorbed through the skin. Extremely flammable liquid. Vapors may explode.

Danger! Product May Contain or Release Hydrogen Sulfide. H2S is a highly toxic, highly flammable gas which can be fatal if inhaled at certain concentrations.

If swallowed, do not induce vomiting, aspiration hazard. Call physician immediately. In case of contact, immediately flush eyes with plenty of water for at least 15 minutes. Wash skin with soap and plenty of water. Product soaked clothing should be removed and laundered before reuse. Read Emergency and First Aid Information section of the MSDS.

Use only in well ventilated locations. Keep away from heat, spark and flames. In case of fire, use water spray, foam, dry chemical or carbon dioxide as described in the Fire and Explosion Hazard Data section of the MSDS. Do not pressurize, cut, weld, braze, solder, drill on or near this container. "Empty" container contains residue (liquid and/or vapor) and may explode in heat of a fire.

For industrial use only. Keep out of reach of children. Failure to use caution may cause serious injury or illness. Never siphon by mouth.

DOT DOT CLASS 3: Flammable liquid.

Continued on Next Page

Disclaimer

Information given herein was compiled from reference materials and other sources believed to be reliable and is offered in good faith. However, the MSDS's accuracy or completeness is not guaranteed by Valero, nor is any responsibility assumed or implied for any loss or damage resulting from inaccuracies or omissions. Conditions of use and suitability of the product for particular uses are beyond our control; all risks of use of the product are therefore assumed by the user and WE EXPRESSLY DISCLAIM ALL WARRANTIES OF EVERY KIND AND NATURE, INCLUDING WARRANTIES OF MERCHANTABILITY AND FITNESS FOR A PARTICULAR PURPOSE IN RESPECT TO THE USE OR SUITABILITY OF THE PRODUCT. Nothing is intended as a recommendation for uses which infringe valid patents or as extending license under valid patents. Appropriate warnings and safe handling procedures should be provided to handlers and users. Alteration of this document is strictly prohibited. Except to the extent required by law, republication or retransmission of this document, in whole or in part, is not permitted.

Date prepared 01/25/2001.

MATERIAL SAFETY DATA SHEET

TENNECO OIL COMPANY
P. O. BOX 2511
HOUSTON, TX 77001

MATERIAL Natural Gasoline
MSDS NO. 312 | DATE 8-85

I. MATERIAL IDENTIFICATION

MATERIAL / TRADE NAME [redacted]

SYNONYMS Casinghead Gasoline

CHEMICAL FAMILY / FORMULA Hydrocarbon

CAS NO. 68425-31-0

24 HOUR EMERGENCY TELEPHONE
TENNECO 713/471-4101
CHEMTREC 800 424-9300

HAZARD RATING*

1	HEALTH
3	FIRE
0	REACTIVITY

0 LEAST 3 HIGH
1 SLIGHT 4 EXTREME
2 MODERATE * NFPA 704

II. INGREDIENTS

COMPOSITION	%	TOXICITY DATA
Natural Gasoline Liquid hydrocarbons separated as a liquid from natural gas consisting primarily of C_5-C_8 hydrocarbons. May also contain Butane (C_4).	100	Ingestion - LD_{50} - 0.5 to 5g/kg

III. PHYSICAL DATA

BOILING POINT, 760mm/Hg	– 58-275°F (14-135°C)	SOLUBILITY IN H_2O, % BY WEIGHT	– Slight
SPECIFIC GRAVITY, H_2O=1	– 0.67 @ 15°C	EVAPORATION RATE, BUTAL ACETATE=1	– Not determined
VAPOR PRESSURE	– 13.5 psia @ 100°F (Reid)		
VAPOR DENSITY, AIR=1	– 3.4		
VOLATILES, % BY VOLUME	– 100		

APPEARANCE AND ODOR Colorless, watery liquid with gasoline odor.

IV FIRE AND EXPLOSION DATA

FLASH POINT AND TEST METHOD	AUTO IGNITION TEMPERATURE	FLAMMABILITY LIMITS IN AIR, % BY VOLUME
0°F (-17°C) TOC	Not determined	LOWER 1.3 UPPER 7.1

EXTINGUISHING MEDIA: Dry chemical, Halon, foam, CO_2. Water may not be effective. Water spray (fog) may be used to cool containers. Water stream may splash and spread flaming liquid.

SPECIAL FIRE FIGHTING PROCEDURES: Flammable liquid. Vapors can readily form explosive mixtures with air. Heavier than air vapors can flow along surfaces to distant ignition sources and flash back. Firefighters should use self-contained breathing equipment in an enclosed area.

UNUSUAL FIRE AND EXPLOSION HAZARDS: Keep away from heat, sources of ignition and oxidizers.

MSDS NO. 312	MATERIAL Natural Gasoline

V. REACTIVITY DATA

STABILITY	HAZARDOUS POLYMERIZATION
[X] STABLE [ ] UNSTABLE	[ ] MAY OCCUR [X] WILL NOT OCCUR

CONDITIONS AND MATERIALS TO AVOID: Keep away from oxidizers, heat and sources of ignition.

HAZARDOUS DECOMPOSITION PRODUCTS: Forms carbon monoxide and carbon dioxide during combustion along with thick black smoke.

VI. OCCUPATIONAL EXPOSURE LIMITS

No specific TLV applies.

ACGIH TLV for motor gasoline which has similar hydrocarbon components is 300 ppm, 8 hr. TWA.

VII. HEALTH INFORMATION

Inhalation causes irritation to upper respiratory tract, central nervous system depression, dizziness, headache, and in extreme cases, coma and respiratory arrest. Irregular heartbeat may also occur.

Vapors can irritate the eyes.

Ingestion can cause irritation of gastronomic tract and produce symptoms similar to inhalation hazards above. Aspiration into the lungs can cause chemical pneumonia and pulmonary edema which can be fatal.

Liquid is defatting to the skin and can cause skin irritation and dermatitis.

VII. EMERGENCY AND FIRST AID PROCEDURES

Skin	- Wash with soap and water immediately after contact. Remove contaminated clothing and launder before reuse.
Eyes	- Flush with large amounts of water for 15 minutes, getting under eyelids. Contact physician if irritation persists.
Inhalation	- Remove to fresh air. Restore breathing if necessary. Administer oxygen if breathing difficulty persists and contact physician for advice.
Ingestion	- Do not induce vomiting. Contact physician immediately for treatment.

IX. EMPLOYEE PROTECTION

RESPIRATORY PROTECTION Use organic vapor cartridge respirator or gas mask for exposures over TLV. Self-contained or air supplied breathing equipment is recommended for exposures over 1000 ppm. Over 13000 ppm is above the lower flammable limits.

PROTECTIVE CLOTHING Chemical goggles should be worn to protect eyes from vapors and splashing. Use neoprene or nitrile gloves and protective clothing to prevent skin contact.

OTHER PROTECTIVE MEASURES
A safety shower and eye wash is recommended in the area of use. Explosion-proof ventilation for local and general purposes should be provided to meet TLV.

X. ENVIRONMENTAL PROTECTION

SPILL CLEAN-UP PROCEDURE Eliminate ignition sources in the area. Contain spill to smallest area possible. Stop leak if safe to do so. Use absorbent materials to soak-up small spills. Recover liquid from large spills for reuse or disposal. Do not allow liquid to enter sewers, drains, or waterways.

WASTE DISPOSAL Waste materials should be disposed of by a licensed solvent disposal company.
Federal, state, and local disposal regulations must be followed.

ENVIRONMENTAL HAZARDS Aquatic toxicity (Fish) TL_m 90 ppm/24 hr.

XI. SPECIAL PRECAUTIONS

Store in closed containers away from heat, oxidizers, and sources of ignition. No smoking in areas of use.

Electrical equipment should be explosion-proof Class I, Group D.

Containers must be electrically grounded or bonded for transfer of liquid.

MSDS NO. 312 | MATERIAL Natural Gasoline

XII. TRANSPORTATION REQUIREMENTS

DOT SHIPPING NAME: Gasoline

DOT I.D. NO.: 1203

DOT CLASSIFICATION: Flammable liquid

UN HAZARD CLASS: UN 1257 (Casinghead Gasoline)

IMCO Class - 3.1

XIII. OTHER REGULATORY CONTROLS

None determined.

THIS INFORMATION RELATES ONLY TO THE SPECIFIC MATERIAL DESIGNATED AND MAY NOT BE VALID FOR SUCH MATERIAL USED IN COMBINATION WITH ANY OTHER MATERIALS OR IN ANY PROCESS. SUCH INFORMATION IS TO THE BEST OF THIS COMPANY'S KNOWLEDGE AND BELIEVED ACCURATE AND RELIABLE AS OF THE DATE INDICATED. HOWEVER, NO REPRESENTATION, WARRANTY OR GUARANTEE IS MADE AS TO ITS ACCURACY, RELIABILTY OR COMPLETENESS. IT IS THE USERS RESPONSIBILITY TO SATISFY HIMSELF AS TO THE SUITABLENESS AND COMPLETENESS OF SUCH INFORMATION FOR HIS OWN PARTICULAR USE.

Tenneco Oil Company
P. O. Box 2511
Houston, TX 77001
A TENNECO COMPANY

DATE PREPARED August, 1985

APPROVED BY E. Wayne Drusch
Tenneco Oil Processing & Marketing
713/757-3113

Diamond Shamrock

A Member of the Ultramar Diamond Shamrock Group of Companies

MATERIAL SAFETY DATA SHEET

1. CHEMICAL PRODUCT AND COMPANY IDENTIFICATION

MSDS NUMBER: M1537

MSDS DATE: 01-31-00

PRODUCT NAME: 14# NATURAL GASOLINE

24 HOUR EMERGENCY PHONE : (210) 979-8346

TRANSPORTATION EMERGENCIES: CALL CHEMTREC AT 1-800-424-9300

MSDS ASSISTANCE: (210) 592-4593

MANUFACTURER'S NAME/ADDRESS:
DIAMOND SHAMROCK REFINING COMPANY, L.P.
P.O BOX 696000
San Antonio, Texas 78269-6000.

CHEMICAL NAME: Natural Gasoline **CAS NUMBER:** 68425-31-0

SYNONYMS/COMMON NAMES : This Material Safety Data Sheet applies to the following product descriptions for Hazard Communication purposes only. Technical specifications vary greatly depending on product and are not reflected in this document. Consult specification sheets for technical information.

Natural gasoline
Condensate gasoline
Gasoline (natural gas), natural
Casinghead gasoline

CHEMICAL FORMULA: C_5-C_8 Hydrocarbons

2. COMPOSITION, INFORMATION ON INGREDIENTS

PRODUCT USE: This product is intended for use as a gasoline motor fuel, or for use in engineered processes. Use in other applications may result in a higher exposures and require additional controls, such as local exhaust ventilation and personal protective equipment.

DESCRIPTION: 14# Natural gasoline is a complex mixture of hydrocarbons from the condensation of natural gas production. Composition varies greatly and includes C5 to C8 hydrocarbons with a boiling range of about 40-250°F. The following is a non-exhaustive list of common components, typical percentage ranges in product, and occupational exposure limits for each.

Component or Material Name	%	CAS Number	ACGIH Limits			OSHA Exposure Limits			
			TLV	STEL	Units	PEL	STEL	C/P*	Units
Natural gasoline	~100	68425-31-0	300	500	ppm	300	500	NA	ppm
Butane	< 3	106-97-8	800	NA	ppm	800	NA	NA	ppm
Pentane	< 32	109-66-0	600	750	ppm	1000	NA	NA	ppm
n-Hexane	< 13	110-54-3	50	NA	ppm	500	NA	NA	ppm
Hexane (other isomers)	< 14	N/A	500	1000	ppm	NA	NA	NA	ppm
Cyclopentane	< 2	287-92-3	600	NA	ppm	NA	NA	NA	ppm
Benzene	< 4	71-43-2	0.5	2.5	ppm	1	5	NA	ppm
Methylcyclohexane	< 1	108-87-2	400	NA	ppm	500	NA	NA	ppm
n-Octane	< 1	115-65-9	300	375	ppm	500	NA	NA	ppm
Toluene	< 1	108-88-3	50	NA	ppm	200	NA	300 (C) 500 (P)	ppm
Heptane	< 3	142-82-5	400	500	ppm	500	NA	NA	ppm
Cyclohexane	< 4	110-82-7	300	NA	ppm	300	NA	NA	ppm

C = Ceiling value which is the concentration that shall not be exceeded during amy part of the working exposure. P = 10 minute peak not to be exceeded more than once per 8-hours.

3. HAZARDS IDENTIFICATION

HEALTH HAZARD DATA:

Exposure to this material can occur through inhalation, skin absorption, and ingestion. The major effect of exposure is central nervous system depression, skin irritation, respiratory tract irritation, eye irritation, and polyneuropathy. Product contains benzene which can cause cancer in humans.

HAZARDS OF COMBUSTION PRODUCTS: Carbon monoxide and carbon dioxide can be found in engine exhaust and other forms of hydrocarbon combustion. Carbon monoxide in moderate

concentrations can cause symptoms of headache, nausea, vomiting, increased cardiac output, and mental confusion. Exposure to higher concentrations of carbon monoxide can cause loss of consciousness, heart damage, brain damage, and/or death. Exposure to high concentrations of carbon dioxide can cause simple asphyxiation by displacing oxygen. Combustion of this and other similar materials should only be carried out in well ventilated areas.

MEDICAL CONDITION GENERALLY AGGRAVATED BY EXPOSURE: Medical conditions which have the same symptoms and effects as those outlined under the health hazard information section can be aggravated by exposure to this product.
MEDICAL LIMITATION: N/A

ROUTES OF EXPOSURE

INHALATION: Irritation of the upper respiratory tract with central nervous system stimulation possibly followed by depression, dizziness, headache, incoordination, anesthesia, coma and respiratory arrest. The threshold for immediate mild toxic effects is reported to be 900-1000 ppm.
SKIN CONTACT: Defatting may occur with continued or prolonged contact. Irritation and burning sensation may occur on exposure to liquid or high vapor phase exposure.
SKIN ABSORPTION: Benzene and n-hexane are absorbed directly through intact skin.
EYE CONTACT: Contact with liquid will cause severe burning sensation with temporary irritation and swelling of lids. Vapors in concentrations of 160-270 ppm in air will irritate the eye.
INGESTION: Irritation of mucous membranes of the throat, esophagus and stomach and may result in nausea and vomiting; depression may occur if absorbed (see Inhalation above). If aspirated, chemical pneumonitis may occur with potentially fatal results.
CARCINOGENICITY STATEMENT:
Gasoline mixtures are not listed as carcinogenic by NTP, OSHA, and ACGIH. Gasoline mixtures are listed as a possible carcinogen by IARC (2B) and NIOSH. Benzene is listed as a confirmed human carcinogen by IARC, NTP, OSHA, NIOSH, and ACGIH.

4. FIRST AID MEASURES

EYES: Immediately flush eyes with large amounts of water for at least 15 minutes holding lids apart to ensure flushing of the entire eye surface. SEEK MEDICAL ATTENTION IMMEDIATELY.
SKIN: Wash contaminated areas with plenty of soap and water. A soothing ointment may be applied to irritated skin after thorough cleansing. Remove contaminated clothing and footwear. SEEK MEDICAL ATTENTION if symptoms result.
INHALATION: Get person out of contaminated area to fresh air. If breathing has stopped, resuscitate and administer oxygen if readily available. **SEEK MEDICAL ATTENTION IMMEDIATELY.**
INGESTION: Never give anything by mouth to an unconscious person. If swallowed, DO NOT induce vomiting. If vomiting occurs spontaneously, keep airway clear. **SEEK MEDICAL ATTENTION IMMEDIATELY.**

NOTES TO PHYSICIAN: Gastric lavage only if large quantity has been ingested. Guard against aspiration into lungs which may result in chemical pneumonititis. Irregular heart beat may occur, use of Adrenaline is not advisable. Treat symptomatically.

5. FIRE AND EXPLOSION DATA

FLASH POINT: <-40°F (Estimated) **AUTOIGNITION TEMPERATURE:** 480°F
FLAMMABLE LIMITS IN AIR: UEL: 7.1%
LEL: 1.3%

EXTINGUISHING MEDIA: Use dry chemical, carbon dioxide, foam or water spray. Water may be ineffective in fighting fires of liquids with low flash points, but water should be used to keep fire-exposed containers cool. If a leak or spill has not ignited, use water spray to disperse the vapors and to protect persons attempting to stop a leak.
SPECIAL FIRE FIGHTING PROCEDURES: Pressure-demand, self-contained breathing apparatus should be provided for fire fighters engaged in activities in the hot zone.
UNUSUAL FIRE AND EXPLOSION HAZARD: Vapors may travel extended distances and flashback with explosive force if ignition sources are present.

6. ACCIDENTAL RELEASE MEASURES

Eliminate all sources of ignition (flames, sparks, heat, electrical equipment, and engines) and remove non-response personnel from the spill area. Contain liquids with earthen dikes or petroleum absorbent materials. Prevent discharges to streams or sewer systems. Control vapors from large spills with fire-fighting foam. Remove liquid with explosion-proof equipment and grounded and bonded suction hoses. Report spills or releases as required to the appropriate local, state, and federal regulatory agencies.

7. HANDLING AND STORAGE INFORMATION

This product is intended for use as engine fuel only. Protect containers against physical damage. Outside, detached, or underground storage is preferred. Separate from oxidizing materials. Store in cool, well ventilated areas of non-combustible construction away from possible sources of ignition (flames, sparks, heat, electrical equipment, and engines). Transfer with explosion-proof equipment and grounded and bonded transfer lines. Consult NFPA 30 and OSHA 1910.106 for specific requirements.

8. EXPOSURE CONTROLS/PERSONAL PROTECTION

VENTILATION REQUIREMENTS: Work in well ventilated areas. Use engineering controls to transfer and store material. Explosion-proof equipment is required. Vapor recovery systems may be required in some areas. Mechanical ventilation is required for confined spaces such as tanks and vessels.

SPECIFIC PERSONAL PROTECTIVE EQUIPMENT

RESPIRATORY: Respiratory protection is normally not required when transferring material in well ventilated areas. When transferring in enclosed areas or at high temperatures, vapors concentrations may warrant use of respiratory equipment. Use NIOSH/MSHA approved respirators following manufacturer's recommendations. Positive pressure supplied air respiratory protection is required for IDLH areas; follow ANSI Z88.2.
EYE: Face shield and goggles or chemical goggles should be worn where splashing is likely.
GLOVES: Impervious gloves such as nitrile gloves should be worn during routine handling of this product.
OTHER CLOTHING AND EQUIPMENT: Standard work clothing is sufficient with good practices. Shoes contaminated with this product that can not be decontaminated should be discarded. Clothing contaminated with this product should be removed, washed in soap and water and dried before reuse. Contaminated clothing should be spread out to dry in a well ventilated area. Shower and eyewash facilities should be accessible.

SPECIAL WORK PRACTICES:
(1) Wear impervious gloves such as nitrile gloves when "dip-sticking storage tanks"
(2) Work up-wind of small spills during clean-up
(3) DO NOT USE THIS PRODUCT as a solvent for cleaning equipment or skin
(4) Store small quantities ONLY in "SAFETY CANS" approved for gasoline storage and labeled "Gasoline"
(5) Allow contaminated rags to completely dry in a well ventilated area before storage.

MONITORING EXPOSURE

BIOLOGICAL: No applicable procedure; breath analysis for hydrocarbons has been suggested. Below are ACGIH Biological Exposure Indices (BEI) monitoring procedures for certain ingredients:

ANALYTE	DETERMINANT	SAMPLING TIME	BEI
Benzene	S-phenylmercapturic acid in urine	End of shift	25 µg/g creatinine
Toluene	Hippuric acid in urine	End of shift	1.6 g/g creatinine
Toluene	Toluene in venous blood	Prior to last shift of week	0.05 mg/L
n-Hexane	2,5-Hexanedione in urine	End of shift	5 mg/g creatinine

PERSONAL/AREA: Both active and passive monitor employing charcoal absorption followed by gas chromatography. A molecular weight of 72.5 has been suggested as the average value to convert the determined weight of hydrocarbons to ppm. Direct reading indicating tubes are available to evaluate short term exposure.

9. PHYSICAL AND CHEMICAL PROPERTIES

APPEARANCE AND ODOR: Clear liquid with characteristic gasoline-like odor.

BOILING RANGE @ 760 mm Hg: 40-250 °F	**VAPOR DENSITY (Air=1):** 3 to 4
MELTING POINT: N/A	**EVAPORATION RATE (BuAc=1):** N/A
VAPOR PRESSURE: 13 psi at 25 °C	**BULK DENSITY:** 5.20-5.25 lbs/gal
SPECIFIC GRAVITY: 0.630 @ 60°F	**% VOLATILES BY VOL.:** 100%
SOLUBILITY IN H20% BY WT.: Insoluble	**pH:** N/A

10. STABILITY AND REACTIVITY INFORMATION

CONDITIONS CONTRIBUTING TO INSTABILITY: Under normal conditions, the material is stable. Avoid sources of ignition such as flames, hot surfaces, electrical or frictional sparks, etc.
INCOMPATIBILITY: Avoid contact with oxidizers, acids, bases, halogens, and metal salts.
HAZARDOUS DECOMPOSITION PRODUCTS: This material at high temperatures may decompose to form carbon monoxide and carbon dioxide.
CONDITIONS CONTRIBUTING TO HAZARDOUS POLYMERIZATION: Material is not known to polymerize.

11. TOXICOLOGICAL INFORMATION

1. ACGIH lists benzene as a human carcinogen with a proposed TLV of 0.5 ppm 8 hour TWA; IARC, NTP and OSHA show sufficient evidence for classifying Benzene as a human carcinogen, see 29 CFR 1910.1028 for current PEL of 1 ppm and specific actions to take. Studies have shown that benzene can induce leukemia at concentrations as low as 1 ppm. Benzene can cause myeloid leukemia, Hodgkin's disease, and lymphomias by inhalation. Significant elevations of chromosomal aberrations have been corroborated among workers exposed to levels at mean concentrations less than 10 ppm. Based on risk assessment studies by Rinsky, an individual inhaling 1 ppm of benzene for 40 years, the odds of benzene-induced leukemic death were 1.7 times higher than those of unexposed workers.
2. N-hexane has been shown to cause polyneuropathy (peripheral nerve damage) after repeated and prolonged exposure; other hexanes show narcotic effects at 1000 ppm and are not metabolized like n-hexane. Other hexane isomers are not metabolized in the same manner as n-hexane and the toxicity is primarily narcotic or neurotoxic.
3. Pentane causes narcosis in very high concentrations. Aspiration of pentane into lungs can produce chemical Pneumonitis and/or pulmonary edema.
4. Cyclopentane vapors causes slight irritation of eyes. Prolonged contact of liquid with skin may cause irritation. Inhalation of vapors at high concentrations causes similar effects to gasoline.
5. n-Heptane is reported to cause slight dizziness in man at 1000ppm. At 5000 ppm it can cause nausea, loss of appetite, and a gasoline taste that can persist for hours.
6. Octane has effects similar to gasoline when high concentrations of vapors are inhaled or aspirated. Contact with eyes will cause irritation. A prolonged exposure of the skin to liquid can cause irritation and cracking.
7. Toluene is a depressant of the human CNS. Exposure above 200 ppm is associated with CNS encephalopathy, headache, depression, lassitude, memory loss, and impaired reaction time.

Increased risk to fetal injury has been observed in pregnant women exposed to levels above 10,000 ppm which may occur if toluene is deliberately concentrated and inhaled.

8. Cyclohexane is irritating to eyes and mucous membranes.
9. May cross the placenta. Alcohol may enhance the toxic effects. Interactions with drugs may occur. Use of stimulants such as epinephrine may cause cardiac arrhythmias.

For more detailed information, contact MSDS Assistance at (210) 592-4593.

12. ECOLOGICAL INFORMATION

For detailed information, contact MSDS Assistance at (210) 592-4593.

13. DISPOSAL CONSIDERATIONS

Clean-up action should be carefully planned and executed. Shipment, storage, and/or disposal of waste materials are regulated and action to handle or dispose of spilled or released materials must meet all applicable local, state and federal rules and regulations. If any question exists, the appropriate agencies should be contacted to assure proper action being taken. Waste product and contaminated material will be considered a hazardous waste if the flash point is less than 140°F requiring disposal at an approved hazardous waste facility.

14. TRANSPORT INFORMATION

DOT PROPER SHIPPING NAME	Gasoline
DOT HAZARD CLASS	3
DOT PACKING GROUP (PG)	II
I.D. NUMBER	UN1203
REQUIRED LABELING	FLAMMABLE LIQUID

15. REGULATORY INFORMATION

TSCA (Toxic Substances Control Act) Inventory
Gasoline is listed in the TSCA inventory.
SARA (Superfund Amendments and Reauthorization Act) TITLE III
This product is reportable under SARA Title III, Sections 311 & 312 as a hazardous substance.
Hazard Categories Applicable under 40 CFR 370.2 (SARA Section 311):

Acute Health	Chronic Health	Pressure	Fire	Reactive
Yes	Yes	No	Yes	No

Components listed under 40 CFR 372.65 (SARA Section 313):
This product does contain chemicals identified as toxic by EPA under 40 CFR Part 372 and is subject to the reporting requirements of this section. The chemicals are:

Chemical Name	CAS #	%
Benzene	71-43-2	< 4
n-hexane	110-54-3	< 13
Toluene	108-82-7	< 1
Cyclohexane	110-82-7	< 4

STATE REGULATIONS:
California Proposition 65: This product contains chemicals known to the State of California to cause cancer, birth defects, or other reproductive harm. These chemicals are : Benzene (cancer), toluene (reproductive effects).

16. OTHER INFORMATION

NFPA (National Fire Protection Association) Hazard Ratings Codes*

Health	Fire	Reactivity	Other
1	4	0	Blank

*Based on "Standard System for the Identification of the Fire Hazards of Materials, NFPA No. 704 M

THIS MATERIAL SAFETY DATA SHEET WAS PREPARED BY ULTRAMAR DIAMOND SHAMROCK CORPORATION IN ACCORDANCE WITH 29 CFR 1910.1200. ALL INFORMATION, RECOMMENDATIONS AND SUGGESTIONS APPEARING HEREIN CONCERNING THIS PRODUCT ARE BASED UPON TESTS AND DATA BELIEVED TO BE RELIABLE, HOWEVER, IT IS THE USER'S RESPONSIBILITY TO DETERMINE THE SAFETY, TOXICITY AND SUITABILITY FOR HIS OWN USE OF THE PRODUCT DESCRIBED HEREIN. SINCE THE ACTUAL USE BY OTHERS IS BEYOND OUR CONTROL, NO GUARANTEE EXPRESSED OR IMPLIED IS MADE BY ULTRAMAR DIAMOND SHAMROCK AS TO THE EFFECTS OF SUCH USE, THE RESULTS TO BE OBTAINED OR THE SAFETY AND TOXICITY OF THE PRODUCT NOR DOES ULTRAMAR DIAMOND SHAMROCK ASSUME ANY LIABILITY ARISING OUT OF USE BY OTHERS OF THE PRODUCT REFERRED TO HEREIN. NOR IS THE INFORMATION HEREIN TO BE CONSTRUED AS ABSOLUTELY COMPLETE SINCE ADDITIONAL INFORMATION MAY BE NECESSARY OR DESIRABLE WHEN PARTICULAR OR EXCEPTIONAL CONDITIONS OR CIRCUMSTANCES EXIST OR BECAUSE OF APPLICABLE LAWS OR GOVERNMENT REGULATIONS.

Definitions of Material Safety Data Sheet Terminology

GOVERNMENT AGENCIES AND PRIVATE ASSOCIATIONS

ACGIH - American Conference of Governmental Industrial Hygienists, (private association)
DOT - United States Department of Transportation
EPA - United States Environmental Protection Agency
IARC - International Agency for Research on Cancer, (private association)
NFPA - National Fire Protection Association, (private association)
MSHA - Mine Safety and Health Administration, U.S. Department of Labor
NIOSH - National Institute of Occupational Safety and Health, U.S. Department of Health and Human Services
NTP - National Toxicology Program, (private association)
OSHA - Occupational Safety and Health Administration, U.S. Department of Labor

HAZARD AND EXPOSURE INFORMATION

Acute Hazard - An adverse health effect which occurs rapidly as a result of short term exposure.
CAS # - American Chemical Society's Chemical Abstract service registry number which identifies the product and/or ingredients.
Ceiling - The concentration that should not be exceeded during any part of the working exposure **Chronic Hazard** - An adverse health effect which generally occurs as a result of long term exposure or short term exposure with delayed health effects and is of long duration
Fire Hazard - A material that poses a physical hazard by being flammable, combustible, phyrophoric or an oxidizer as defined by 29 CFR 1910.1200
Hazard Class - DOT hazard classification
Hazardous Ingredients - Names of ingredients which have been identified as health hazards
IDLH- Immediately Dangerous to Life and Health, the airborne concentration below which a person can escape without respiratory protection and exposure up to 30 minutes, and not suffer debilitating or irreversible health effects. Established by NIOSH.
mg/m^3 - Milligrams of contaminant per cubic meter of air, a mass to volume ratio
N/A - Not available or no relevant information found **NA** - Not applicable
PEL - OSHA permissible exposure limit; an action level of one half this value may be applicable
ppm - Part per million (one volume of vapor or gas in one million volumes of air)
Pressure Hazard - A material that poses a physical hazard due to the potential of a sudden release of pressure such as explosive or a compressed gas as defined by 29 CFR 1910.1200
Reactive Hazard - A material that poses a physical hazard due to the potential to become unstable reactive, water reactive or that is an organic peroxide as defined by 29 CFR 1910.1200.
STEL - The ACGIH Short-Term Exposure Limit, a 15-minute Time-Weighted Average exposure which should not be exceeded at any time during a workday, even if the 8-hour TWA is less than the TLV.
TLV - ACGIH Threshold Limit Value, represented herein as an 8-hour TWA concentration.
8-hour TWA - The time weighted average concentration for a normal 8-hour workday and a 40-hour workweek, to which nearly all workers may be repeatedly exposed, day after day, without adverse effect.

ConocoPhillips

MATERIAL SAFETY DATA SHEET

No. 2 Diesel Fuel

1. PRODUCT AND COMPANY IDENTIFICATION

Product Name:	No. 2 Diesel Fuel
Synonyms:	CARB Diesel TF3; CARB Diesel; CARB Diesel 10% CARB Diesel Ultra Low Sulfur - Dyed and Undyed EPA Low Sulfur Diesel Fuel - Dyed and Undyed EPA Off Road High Sulfur Diesel - Dyed High Sulfur Diesel Fuel; Low Sulfur Diesel Fuel No. 2 Diesel Fuel Oil No. 2 High Sulfur Diesel - Dyed No. 2 Low Sulfur Diesel - Dyed; No. 2 Low Sulfur Diesel - Undyed No. 2 Low Sulfur Distillate No. 2 Ultra Low Sulfur Diesel - Dyed; No. 2 Ultra Low Sulfur Diesel - Undyed Super Diesel Fuel; Super Diesel Fuel II-LS Virgin Diesel Fuel; No. 2 Distillate Super Diesel Fuel; Super Diesel Fuel II-LS Virgin Diesel Fuel
Intended Use:	Fuel
Chemical Family:	Petroleum Hydrocarbon
Responsible Party:	ConocoPhillips 600 N. Dairy Ashford Houston, Texas 77079-1175
MSDS Information:	800-762-0942 MSDS@conocophillips.com
Customer Service:	800-527-5476
Technical Information:	800-527-5476

Emergency Overview

24 Hour Emergency Telephone Numbers:
Spill, Leak, Fire or Accident Call CHEMTREC:
North America: (800) 424-9300
Others: (703) 527-3887 (collect)

California Poison Control System: (800) 356-3219

Health Hazards/Precautionary Measures: Causes skin irritation. Aspiration hazard if swallowed. Can enter lungs and cause damage. Use with ventilation adequate to keep exposure below recommended limits, if any. Avoid contact with eyes, skin and clothing. Do not taste or swallow. Wash thoroughly after handling.

Physical Hazards/Precautionary Measures: Flammable liquid and vapor. Keep away from heat, sparks, flames, static electricity or other sources of ignition.

Appearance:	Straw colored to dyed red
Physical Form:	Liquid
Odor:	Diesel fuel

NFPA 704 Hazard Class:

Health:	1 (Slight)
Flammability:	2 (Moderate)
Instability:	0 (Least)

2. COMPOSITION / INFORMATION ON INGREDIENTS

HAZARDOUS COMPONENTS					
Component / CAS No:	Concentration (wt %)	ACGIH:	OSHA:	NIOSH:	Other:
Diesel Fuel No. 2 68476-34-6	100	100 mg/m³ TWA-SKIN	NE	NE	—
Naphthalene 91-20-3	<1	10 ppm TWA 52 mg/m³ TWA 15 ppm STEL 79 mg/m³ STEL	10 ppm TWA 50 mg/m³ TWA	250 ppm IDLH	—

Note: State, local or other agencies or advisory groups may have established more stringent limits. Consult an industrial hygienist or similar professional, or your local agencies, for further information.

1%=10,000 PPM.
NE=Not Established

3. HAZARDS IDENTIFICATION

Potential Health Effects

Eye: Contact may cause mild eye irritation including stinging, watering, and redness.

Skin: Mild to moderate skin irritant. Contact may cause redness, itching, burning, and skin damage. Prolonged or repeated contact may cause drying and cracking of the skin, dermatitis (inflammation), burns, and severe skin damage. No harmful effects from skin absorption have been reported.

Inhalation (Breathing): No information available. Studies by other exposure routes suggest a low degree of toxicity by inhalation.

Ingestion (Swallowing): Low degree of toxicity by ingestion. ASPIRATION HAZARD - This material can enter lungs during swallowing or vomiting and cause lung inflammation and damage.

Signs and Symptoms: Effects of overexposure may include irritation of the respiratory tract, irritation of the digestive tract, nausea, diarrhea, transient excitation followed by signs of nervous system depression (e.g., headache, drowsiness, dizziness, loss of coordination, disorientation and fatigue).

Cancer: There is inadequate information to evaluate the cancer hazard of this material. See Section 11 for information on the individual components, if any.

Target Organs: Inadequate evidence available for this material. See Section 11 for target-organ toxicity information of individual components, if any.

Developmental: Inadequate data available for this material.

Pre-Existing Medical Conditions: Conditions aggravated by exposure may include skin disorders.

4. FIRST AID MEASURES

Eye: If irritation or redness develops, move victim away from exposure and into fresh air. Flush eyes with clean water. If symptoms persist, seek medical attention.

Skin: Remove contaminated shoes and clothing, and flush affected area(s) with large amounts of water. If skin surface is damaged, apply a clean dressing and seek medical attention. If skin surface is not damaged, cleanse affected area(s) thoroughly by washing with mild soap and water. If irritation or redness develops, seek medical attention.

Inhalation (Breathing): If respiratory symptoms develop, move victim away from source of exposure and into fresh air. If symptoms persist, seek medical attention. If victim is not breathing, clear airway and immediately begin artificial respiration. If breathing difficulties develop, oxygen should be administered by qualified personnel. Seek immediate medical attention.

Ingestion (Swallowing): Aspiration hazard: Do not induce vomiting or give anything by mouth because this material can enter the lungs and cause severe lung damage. If victim is drowsy or unconscious and vomiting, place on the left side with the head down. If possible, do not leave victim unattended and observe closely for adequacy of breathing. Seek medical attention.

5. FIRE-FIGHTING MEASURES

Flammable Properties:

Flash Point:	125-180°F / 52-82°C
Test Method:	Pensky-Martens Closed Cup (PMCC), ASTM D93, EPA 1010
OSHA Flammability Class:	Combustible liquid
LEL%:	0.3
UEL%:	10.0
Autoignition Temperature:	500°F / 260°C

Unusual Fire & Explosion Hazards: This material is flammable and can be ignited by heat, sparks, flames, or other sources of ignition (e.g., static electricity, pilot lights, or mechanical/electrical equipment, and electronic devices such as cell phones, computers, calculators, and pagers which have not been certified as intrinsically safe). Vapors may travel considerable distances to a source of ignition where they can ignite, flash back, or explode. May create vapor/air explosion hazard indoors, in confined spaces, outdoors, or in sewers. Vapors are heavier than air and can accumulate in low areas. If container is not properly cooled, it can rupture in the heat of a fire.

Extinguishing Media: Dry chemical, carbon dioxide, or foam is recommended. Water spray is recommended to cool or protect exposed materials or structures. Carbon dioxide can displace oxygen. Use caution when applying carbon dioxide in confined spaces. Water may be ineffective for extinguishment, unless used under favorable conditions by experienced fire fighters.

Fire Fighting Instructions: For fires beyond the incipient stage, emergency responders in the immediate hazard area should wear bunker gear. When the potential chemical hazard is unknown, in enclosed or confined spaces, or when explicitly required by DOT, a self contained breathing apparatus should be worn. In addition, wear other appropriate protective equipment as conditions warrant (see Section 8).

Isolate immediate hazard area, keep unauthorized personnel out. Stop spill/release if it can be done with minimal risk. Move undamaged containers from immediate hazard area if it can be done with minimal risk.

Water spray may be useful in minimizing or dispersing vapors and to protect personnel. Cool equipment exposed to fire with water, if it can be done with minimal risk. Avoid spreading burning liquid with water used for cooling purposes.

6. ACCIDENTAL RELEASE MEASURES

Flammable. Keep all sources of ignition and hot metal surfaces away from spill/release. The use of explosion-proof electrical equipment is recommended.

Stay upwind and away from spill/release. Notify persons down wind of the spill/release, isolate immediate hazard area and keep unauthorized personnel out. Stop spill/release if it can be done with minimal risk. Wear appropriate protective equipment including respiratory protection as conditions warrant (see Section 8).

Prevent spilled material from entering sewers, storm drains, other unauthorized drainage systems, and natural waterways. Dike far ahead of spill for later recovery or disposal. Use foam on spills to minimize vapors (see Section 5). Spilled material may be absorbed into an appropriate absorbent material.

Notify fire authorities and appropriate federal, state, and local agencies. Immediate cleanup of any spill is recommended. If spill of any amount is made into or upon navigable waters, the contiguous zone, or adjoining shorelines, notify the National Response Center (phone number 800-424-8802).

7. HANDLING AND STORAGE

Handling: Open container slowly to relieve any pressure. Bond and ground all equipment when transferring from one vessel to another. Can accumulate static charge by flow or agitation. Can be ignited by static discharge. The use of explosion-proof electrical equipment is recommended and may be required (see appropriate fire codes). Refer to NFPA-704 and/or API RP 2003 for specific bonding/grounding requirements.

Do not enter confined spaces such as tanks or pits without following proper entry procedures such as ASTM D-4276 and 29CFR 1910.146. The use of appropriate respiratory protection is advised when concentrations exceed any established exposure limits (see Sections 2 and 8).

Do not wear contaminated clothing or shoes. Keep contaminated clothing away from sources of ignition such as sparks or open flames. Use good personal hygiene practices.

"Empty" containers retain residue and may be dangerous. Do not pressurize, cut, weld, braze, solder, drill, grind, or expose such containers to heat, flame, sparks, or other sources of ignition. They may explode and cause injury or death. "Empty" drums should be completely drained, properly bunged, and promptly shipped to the supplier or a drum reconditioner. All containers should be disposed of in an environmentally safe manner and in accordance with governmental regulations.

Before working on or in tanks which contain or have contained this material, refer to OSHA regulations, ANSI Z49.1, and other references pertaining to cleaning, repairing, welding, or other contemplated operations.

Storage: Keep container(s) tightly closed. Use and store this material in cool, dry, well-ventilated areas away from heat, direct sunlight, hot metal surfaces, and all sources of ignition. Post area "No Smoking or Open Flame." Store only in approved containers. Keep away from any incompatible material (see Section 10). Protect container(s) against physical damage. Outdoor or detached storage is preferred. Indoor storage should meet OSHA standards and appropriate fire codes.

8. EXPOSURE CONTROLS / PERSONAL PROTECTION

Engineering controls: If current ventilation practices are not adequate to maintain airborne concentrations below the established exposure limits (see Section 2), additional engineering controls may be required. Where explosive mixtures may be present, electrical systems safe for such locations must be used (see appropriate electrical codes).

Personal Protective Equipment (PPE):

Respiratory: A NIOSH certified air purifying respirator with an organic vapor cartridge may be used under conditions where airborne concentrations are expected to exceed exposure limits (see Section 2).

Protection provided by air purifying respirators is limited (see manufacturer's respirator selection guide). Use a NIOSH approved self-contained breathing apparatus (SCBA) or equivalent operated in a pressure demand or other positive pressure mode if there is potential for an uncontrolled release, exposure levels are not known, or any other circumstances where air purifying respirators may not provide adequate protection.

A respiratory protection program that meets OSHA's 29 CFR 1910.134 and ANSI Z88.2 requirements must be followed whenever workplace conditions warrant a respirator's use.

Skin: The use of gloves impervious to the specific material handled is advised to prevent skin contact, possible irritation, and skin damage. Examples of approved materials are nitrile or Viton® (see glove manufacturer literature for information on permeability). Depending on conditions of use, apron and/or arm covers may be necessary.

Eye/Face: Approved eye protection to safeguard against potential eye contact, irritation, or injury is recommended. Depending on conditions of use, a face shield may be necessary.

Other Protective Equipment: Eye wash and quick-drench shower facilities should be available in the work area. Thoroughly clean shoes and wash contaminated clothing before reuse. It is recommended that impervious clothing be worn when skin contact is possible.

Suggestions for the use of specific protective materials are based on readily available published data. Users should check with specific manufacturers to confirm the performance of their products.

9. PHYSICAL AND CHEMICAL PROPERTIES

Note: Unless otherwise stated, values are determined at 20°C (68°F) and 760 mm Hg (1 atm).

9. PHYSICAL AND CHEMICAL PROPERTIES

Appearance:	Straw colored to dyed red
Physical Form:	Liquid
Odor:	Diesel fuel
Odor Threshold:	No data
pH:	Not applicable
Vapor Pressure (mm Hg):	0.40
Vapor Density (air=1):	> 3
Boiling Point:	300-690°F / 149-366°C
Solubility in Water:	Negligible
Partition Coefficient (n-octanol/water) (Kow):	No data
Specific Gravity:	0.81-0.88@ 60°F (15.6°C)
Bulk Density:	7.08 lbs/gal
Viscosity cSt @ 40°C:	1.7-4.1
Percent Volatile:	Negligible@ ambient conditions
Evaporation Rate (nBuAc=1):	<1
Flash Point:	125-180°F / 52-82°C
Test Method:	Pensky-Martens Closed Cup (PMCC), ASTM D93, EPA 1010
LEL%:	0.3
UEL%:	10.0
Autoignition Temperature:	500°F / 260°C

10. STABILITY AND REACTIVITY

Stability: Stable under normal ambient and anticipated storage and handling conditions of temperature and pressure. Flammable liquid and vapor. Vapor can cause flash fire.

Conditions to Avoid: Avoid all possible sources of ignition (see Sections 5 and 7).

Materials to Avoid (Incompatible Materials): Avoid contact with strong oxidants such as liquid chlorine, concentrated oxygen, sodium hypochlorite, calcium hypochlorite, etc.

Hazardous Decomposition Products: Combustion can yield carbon, nitrogen and sulfur oxides. The use of hydrocarbon fuel in an area without adequate ventilation may result in hazardous levels of combustion products (e.g., oxides of carbon, sulfur and nitrogen, benzene and other hydrocarbons) and/or dangerously low oxygen levels. See Section 11 for additional information on hazards of engine exhaust. IARC has classified Diesel exhaust as probably carcinogenic in humans.

Hazardous Polymerization: Will not occur.

11. TOXICOLOGICAL INFORMATION

Chronic Data:

Diesel Fuel No. 2 (68476-34-6)

Carcinogenicity: Petroleum middle distillates have been shown to cause skin tumors in mice following repeated and prolonged skin contact. Follow-up studies have shown that these tumors are produced through a non-genotoxic mechanism associated with frequent cell damage and repair, and that they are not likely to cause tumors in the absence of prolonged skin irritation. Animal studies have also shown that washing the skin with soap and water can reduce the tumor response. Middle distillates with low polynuclear aromatic hydrocarbon content have not been identified as a carcinogen by NTP, IARC or OSHA.

Target Organs: Limited evidence of renal impairment has been noted from a few older case reports involving excessive exposure to diesel fuel No. 2. However, renal toxicity has not been demonstrated to be a consistent finding of diesel fuel exposure.

Naphthalene (91-20-3)

Carcinogenicity: Naphthalene has been evaluated in two year inhalation studies in both rats and mice. The National Toxicology Program (NTP) concluded that there is clear evidence of carcinogenicity in male and female rats based on increased incidences of respiratory epithelial adenomas and olfactory epithelial neuroblastomas of the nose. NTP found some evidence of carcinogenicity in female mice (alveolar adenomas) and no evidence of carcinogenicity in male mice. Naphthalene has been identified as a carcinogen by IARC and NTP.

Acute Data:

Diesel Fuel No. 2 (68476-34-6)
Dermal LD50= >5ml/kg (Rabbit)
LC50= No data available
Oral LD50= 9 ml/kg (Rat)

Naphthalene (91-20-3)
Dermal LD50= >2.5 g/kg (rat)
LC50= >340 mg/m^3/1H (rat)
Oral LD50= 490 mg/kg; 2.6 g/kg (rat)

12. ECOLOGICAL INFORMATION

When middle distillate hydrocarbons escape into the environment due to leaks or spills, most of their constituent hydrocarbons will evaporate and be photodegraded by reaction with hydroxyl radicals in the atmosphere. The half-lives in air for many of the individual hydrocarbons is less than one day. Less volatile hydrocarbons can persist in the aqueous environment for longer periods. They remain floating on the surface of the water; those that reach soil or sediment biodegrade relatively slowly. Soil contaminated with middle distillates can develop adapted microbial species able to use the fuel as a carbon source; soil aeration and nutrient supplementation can enhance this biodegradation.

Reported LC50/EC50 values for water-soluble fractions of middle distillates are usually in the range of 10 to 100 mg/liter. Adverse effects on the gills, pseudobranch, kidney and nasal mucosa have been reported in fish involved in spills of middle distillates. Juvenile clams may be particularly sensitive to marine sediments contaminated as a result of spilled material. Direct toxicity and fouling of sea birds can occur if birds dive through floating layers of spilled material.

Phytotoxic effects of middle distillate hydrocarbons have been reported following exposure of plants to sprays or vapors. Lack of seed germination and inhibition of seedling growth may also occur. There is evidence for moderate bioaccumulation of the water-soluble hydrocarbons present in middle distillates.

13. DISPOSAL CONSIDERATIONS

This material, if discarded as produced, is not a RCRA "listed" hazardous waste. However, it should be fully characterized for ignitability (D001) and benzene (D018) prior to disposal (40 CFR 261). Use which results in chemical or physical change or contamination may subject it to regulation as a hazardous waste. Along with properly characterizing all waste materials, consult state and local regulations regarding the proper disposal of this material.

Container contents should be completely used and containers should be emptied prior to discard. Container rinsate could be considered a RCRA hazardous waste and must be disposed of with care and in full compliance with federal, state and local regulations. Larger empty containers, such as drums, should be returned to the distributor or to a drum reconditioner. To assure proper disposal of smaller empty containers, consult with state and local regulations and disposal authorities.

14. TRANSPORT INFORMATION

DOT

Shipping Description: Diesel Fuel, Combustible liquid, NA1993, III
Non-Bulk Package Marking: Not regulated in non-bulk quantities
Non-Bulk Package Labeling: Not regulated in non-bulk quantities
Bulk Package/Placard Marking: Combustible/1993
Packaging - References (Exceptions, Non-Bulk, Bulk): 49 CFR 173.150(f), 173.203, 173.241
Hazardous Substance: None
Emergency Response Guide: 128
Note: This product has been reclassified as a Combustible Liquid for domestic land transportation using 49 CFR 173.150(f).

IMDG

Shipping Description: UN1202, Diesel fuel, 3, III (52°C)
Non-Bulk Package Marking: Diesel fuel, UN1202

14. TRANSPORT INFORMATION

Labels: Flammable
Placards/Marking (Bulk): Flammable/1202
Packaging - Non-Bulk: P001, LP01
EMS: F-E, S-E

ICAO/IATA

UN/ID #: UN1202
Proper Shipping Name: Diesel fuel
Hazard Class/Division: 3
Packing Group: III
Subsidiary risk: None
Non-Bulk Package Marking: Diesel fuel, UN1202
Labels: Flammable

	LTD. QTY.	Passenger Aircraft	Cargo Aircraft Only
Packaging Instruction #:	Y309	309	310
Max. Net Qty. Per Package:	10 L	60 L	220 L

15. REGULATORY INFORMATION

U.S. Regulations:

EPA SARA 311/312 (Title III Hazard Categories)

Acute Health:	Yes
Chronic Health:	No
Fire Hazard:	Yes
Pressure Hazard:	No
Reactive Hazard:	No

SARA - Section 313 and 40 CFR 372:
This material contains the following chemicals subject to the reporting requirements of SARA 313 and 40 CFR 372:
Naphthalene.....91-20-3.....<1%

EPA (CERCLA) Reportable Quantity (in pounds):
EPA's Petroleum Exclusion applies to this material - (CERCLA 101(14)).

CERCLA/SARA - Section 302 Extremely Hazardous Substances and TPQs (in pounds):
This material contains the following chemicals subject to the reporting requirements of SARA 302 and 40 CFR 372:
-- None Known --

California Proposition 65:
Warning: This material contains the following chemicals which are known to the State of California to cause cancer, birth defects or other reproductive harm, and are subject to the requirements of California Proposition 65 (CA Health & Safety Code Section 25249.5):
Benzene -- Cancer, Developmental and Reproductive Toxicant
Naphthalene -- Cancer
Toluene -- Developmental Toxicant

Diesel engine exhaust, while not a component of this material, is on the Proposition 65 list of chemicals known to the State of California to cause cancer.

Carcinogen Identification:
This material has not been identified as a carcinogen by NTP, IARC, or OSHA. See Section 11 for carcinogenicity information of individual components, if any.

Diesel exhaust is a probable cancer hazard based on tests in laboratory animals. It has been identified as a carcinogen by IARC.

TSCA:
All components are listed on the TSCA inventory.

International Regulations:

Canadian Regulations:
This product has been classified in accordance with the hazard criteria of the Controlled Products Regulations (CPR) and the MSDS contains all the information required by the CPR.

Domestic Substances List: Listed
WHMIS Hazard Class:
B2 - Flammable Liquids
D2B - Materials Causing Other Toxic Effects - Toxic Material

16. OTHER INFORMATION

Issue Date:	21-Feb-2006
Previous Issue Date:	13-Feb-2003
Product Code:	Multiple
Previous Product Code:	Multiple
Revised Sections or Basis for Revision:	Product Name / Synonyms (Section 1)
MSDS Code:	001847

Disclaimer of Expressed and implied Warranties:
The information presented in this Material Safety Data Sheet is based on data believed to be accurate as of the date this Material Safety Data Sheet was prepared. HOWEVER, NO WARRANTY OF MERCHANTABILITY, FITNESS FOR ANY PARTICULAR PURPOSE, OR ANY OTHER WARRANTY IS EXPRESSED OR IS TO BE IMPLIED REGARDING THE ACCURACY OR COMPLETENESS OF THE INFORMATION PROVIDED ABOVE, THE RESULTS TO BE OBTAINED FROM THE USE OF THIS INFORMATION OR THE PRODUCT, THE SAFETY OF THIS PRODUCT, OR THE HAZARDS RELATED TO ITS USE. No responsibility is assumed for any damage or injury resulting from abnormal use or from any failure to adhere to recommended practices. The information provided above, and the product, are furnished on the condition that the person receiving them shall make their own determination as to the suitability of the product for their particular purpose and on the condition that they assume the risk of their use. In addition, no authorization is given nor implied to practice any patented invention without a license.

From: Fields, Jon [JEFIELDS@eprod.com]
Sent: Thursday, May 24, 2012 10:57 AM
To: Clonts, Michael
Cc: Stratton, Kimberly; Fields, Jon
Subject: Enterprise Products FRP Submittal

Mike,

Can we submit the FRP electronically or do you prefer a hard copy?

Thank

Jon E. Fields
Senior Manager, Environmental
Houston Region
(281) 385 - 4300 (Office)
(832) 596 - 7176 (Cell)

This message (including any attachments) is confidential and intended for a specific individual and purpose. If you are not the intended recipient, please notify the sender immediately and delete this message.

From: Stratton, Kimberly [KASTRATTON@eprod.com]
Sent: Friday, May 25, 2012 11:23 AM
To: Clonts, Michael; Don Smith Sr (smith.donaldp@epa.gov)
Cc: Fields, Jon; Wheaton, Rachel
Subject: Enterprise Products Operating LLC, East Storage/Splitter III FRP Part 1 of 2
Attachments: East Storage FRP 5-24-12(1).pdf

I have split the revised FRP into to emails in the hopes that it will get through our filters. Please let me know if you do not receive them.

Kim Stratton
Senior Field Environmental Scientist
281-470-4939
832-262-9947 (cell)
kastratton@eprod.com

This message (including any attachments) is confidential and intended for a specific individual and purpose. If you are not the intended recipient, please notify the sender immediately and delete this message.

FACILITY RESPONSE PLAN (FRP)

Prepared For
ENTERPRISE PRODUCTS OPERATING LLC
EAST STORAGE/SPLITTER III FACILITY
Mont Belvieu, Texas

Prepared By
THE WCM GROUP, INC.
Humble, Texas

May 2012

FACILITY RESPONSE PLAN (FRP)

Prepared For
ENTERPRISE PRODUCTS OPERATING LLC
EAST STORAGE/SPLITTER III FACILITY
Mont Belvieu, Texas

TABLE OF CONTENTS

USCG FORMAT (33 CFR Part 154)

RECORD OF CHANGES v
PLAN AVAILABILITY vi

33 CFR Part 154.1035(a) INTRODUCTION AND PLAN CONTENT 1
(1) Facility Name, Address, Telephone, FAX 1
(2) Location Description 1
(3) Owner Contact Procedures 1
(4) Table of Contents 1
(5) Cross-Index(ces) 2
(6) Record of Changes 2

33 CFR 154.1035(b) EMERGENCY RESPONSE ACTION PLAN 3
(1) Notification Procedures 3
(i) Prioritized Identification 3
(A) Facility Response Personnel, Contractors, Qualified Individual 3
(B) Federal, State, and Local Agencies 3
(ii) Agency Notification Checklist and Form 5
(2) Spill Mitigation Procedures 5
(i) Volume of Potential Discharges 6
(A) Average Most Probable Discharge 6
(B) Maximum Most Probable Discharge 6
(C) Worst-Case Discharge – MTR 6
(D) Worst-Case Discharge - NTR Portion of Facility 6
(ii) Prioritized Procedures to Mitigate or Prevent Discharge 6
(A) Failure of Manifold, Transfer Equipment, Hoses, and Loading Arm 6
(B) Tank Overfill 6
(C) Tank Failure 7
(D) Piping Rupture 7
(E) Piping Leak 7
(F) Explosion and/or Fire 7
(G) Equipment Failure 7
(iii) Equipment List and Personnel - Average Most Probable Discharge 8
(3) Facility's Response Activities 8
(i) Response Activities Prior to Arrival of the Qualified Individual 8
(ii) Qualified Individual's Authority and Responsibility 8
(iii) Organizational Structure 10
(A) Command and Control 10
(B) Public Information 10
(C) Safety 10
(D) Liaison with Government 10
(E) Spill Operations 10
(F) Planning 10

(G) Logistical Support 10
(H) Finance 10
(iv) Oil Spill Removal Organizations 10
(A) Equipment and Supplies 10
(B) Trained Personnel 11
(v) Spill Management Team Job Description 11
(vi) Resource Providers and Specific Resources (Dispersant) 12
(vii) Aerial Oil Tracking Capabilities 12
(viii) Oil Spill Removal Organization (One COTP Zone) 12
(ix) Oil Spill Removal Organization (More than one COTP Zone) 12
(4) Fish and Wildlife Sensitive Areas 12
(i) Discussion of Economically and Environmentally Sensitive Areas 12
(ii) Worst Case Discharge 12
(A) Potential Impact to Fish and Wildlife 12
(B) Sensitive Area Protection Plan 13
(i) Persistent Oils in Non-Tidal Environment, 48-Hr Projection 13
(ii) Persistent Oils in Tidal Environment, Fifteen Mile Projection 13
(iii) Non-Persistent Oils in Non-Tidal Environment, 24-Hr Projection 13
(iv) Non-Persistent Oils in Tidal Environment, Five Mile Projection 13
(B2) Spill Trajectory Model/Other Protected Areas 13
(5) Disposal Plan 14

HAZARD EVALUATION - Removed in USCG Final Rule, See EPA Appendix

DISCUSSION OF SPILL SCENARIOS - Removed in USCG Final Rule, See TGLO Appendix

33 CFR Part 154.1035(c) TRAINING AND DRILLS 14
(1) Training Procedures 14
(2) Exercise Procedures 15

33 CFR Part 154.1035(d) PLAN REVIEW AND UPDATE 17

33 CFR Part 154.1035(e) APPENDICES 18
(1) Facility-Specific Information 18
(i) Physical Description and Plan 18
(ii) Sizes, Types, and Numbers of Vessels 18
(iii) Valve Locations 18
(iv) MSDSs 18
(A) Generic or Chemical Name 18
(B) Appearance and Odor 18
(C) Physical and Chemical Characteristics 18
(D) Handling Hazards 18
(E) Fire Fighting Procedures 18

(v) Other Information 18
(2) List of Contacts 18
(i) Primary and Alternate Qualified Individuals 18
(iii) Federal, State, and Local Officials 18
(3) Equipment Lists and Records 19
(i) Equipment for Response to Average Most Probable Discharge 19
(ii) Oil Spill Removal Organization's Equipment for Worst Case Discharge 19
(iii) Equipment List Ad Specifics 19
(A) Make, Model, Year 19
(B) Effective Daily Recovery Rate 19
(C) Boom Height and Connector Type 19
(D) Scenario in Which Equipment Will Be Used 19
(E) Total Daily Storage and Disposal Capacity 19
(F) Equipment Storage Locations 19
(G) Date of Last Inspection 19
(4) Communications Plan 19
(5) Site-Specific Safety and Health Plan 20
(6) Acronyms and Definitions 20

APPENDICES

I - Alternate and Qualified Individual Letters of Agreement

II - OSRO Letters of Agreement and Inventory (if unclassified)

III - EPA APPENDICES (those applicable)

- EPA Appendix C Substantial Harm Facility Attachments
- EPA Appendix D Worst-Case Planning Volumes - Part A, Onshore Storage Facilities
- EPA Appendix E Required Resources and Attachments
- EPA Appendix F Model Plan - Cross Reference to This Format

IV - SPCC Plan (Separate Document)

V - Facility OSPRA Planning & Elements (Texas General Land Office)

VI - Historical Spill Information

VII - Facility Diagrams and Aerial Photos

VIII - Fish and Wildlife Sensitive Areas Information & Reference Maps

IX - Spill Management Team Structure (Incorporating ICS)

X - Blank Forms

XI - Completed Forms

XII - Agency Correspondence

XIII - Training Records

XIV - Applicable Regulations

XV - MSDSs

RECORD OF CHANGES

Use this form to record minor changes that do not result in re-printing and/or re-submission of the entire plan to regulatory agencies (changes in names, phone numbers, etc.)

Date	Change & Page #	Personnel

PLAN AVAILABILITY

Copies of the Facility Response Plan (FRP) are maintained at the following locations:

Location	Plan Holder	Document Number
East Storage Control Room	Dale Conn	1
East/West Storage Manager's Office	Zac Futerfas	2
Splitter III Control Room	Rick Iler	3
Propylene Fractionation Operations Manager	Kelly Tinsley	4
Environmental Office	Kim Stratton	5
Mont Belvieu Environmental Files	Rachel Wheaton	6
Corporate Environmental Files	Shiver Nolan	7
EPA – Region VI	EPA Region VI	8
The WCM Group, Inc.	The WCM Group, Inc.	9

33 CFR Part 154.1035 Specific Requirements for facilities that could reasonably be expected to cause substantial harm to the environment.

33 CFR Part 154.1035(a) INTRODUCTION AND PLAN CONTENT

(1) Facility Name, Address, Telephone, FAX

Company:	Enterprise Products Operating LLC
Site Name:	East Storage/Splitter III Facility
Street address:	316 S. Main Street, Mont Belvieu, Texas 77590
Mailing address:	P.O. Box 573, Mont Belvieu, Texas 77590
Phone (main):	281-385-4200
FAX (main):	281-576-2482

Enterprise Products Operating LLC (Enterprise) operates natural gas liquids facilities which include the subsurface salt formation hydrocarbon storage and/or fractionation of various gaseous and liquid petrochemical products such as ethane, propane, propylene, isobutane, normal butane, iso-octene/isooctane, MTBE and natural gasoline from hydrocarbon feedstock.

The East Storage/Splitter III facility is comprised of:

- East Storage operation is a "transportation related" and distribution operation subject to DOT Jurisdiction and Underground Injection Control Programs; and
- Splitter III operation, which produces propane and propylene

(2) Location Description

The Enterprise Products Operating LLC – East Storage/Splitter III facility is located at 316 S. Main Street, Mont Belvieu, Texas 77580. The latitude and longitude of the facility is 29 degrees, 50 minutes, 17.31 seconds N and 94 degrees, 53 minutes, 27.58 seconds W.

(3) 24-Hr Owner or Operator Contact Procedures

The facility is manned 24 hours a day, 7 days a week, 365 days a year. The facility may be contacted on a 24 hour basis by contacting the Qualified Individual, or the security office. Contact numbers are further elaborated within part (b) of this FRP.

(4) Table of Contents

A Table of Contents, using a modified United States Coast Guard (USCG) Final Rule format, is included at the beginning of this FRP. Modifications reflect other regulatory agency requirements.

(5) Cross-Index(ces)

A cross index to US Environmental Protection Agency (EPA) format is found in Appendix III.

(6) Record of Changes

A Record of Changes Sheet is located in the front section of this FRP.

33 CFR 154.1035 Specific Requirements for facilities that could reasonably be expected to cause substantial harm to the environment.

33 CFR 154.1035(b) EMERGENCY RESPONSE ACTION PLAN

(1) Notification Procedures

(i)(A) Facility Personnel, Contractors, Qualified Individual and Alternate

(i)(B) Federal, State, and Local Agencies

1. First Responder notifies QUALIFIED INDIVIDUAL(QI) or ALTERNATE QUALIFIED INDIVIDUAL (AQI):

NAME	OFFICE	24-HOUR
Zac Futerfas – Manager Storage (Qualified Individual)	281-385-0510	281-253-7393
Dale Conn, Operations Superintendent Storage/Pipelines/Terminals (Alternate Qualified Individual - AQI)	281-385-0210	281-793-2329

If neither of the individuals listed above is reachable, then the First Responder will act in the capacity of the Qualified Individual until relieved by an appropriate member of the Spill Management Team.

2. INDIVIDUAL contacted above will notify the following as well as additional members of the Spill Management Team as warranted by the incident (see Appendix IX):

NAME	OFFICE	24-HOUR
Kim Stratton, Senior Field Environmental Scientist	281-470-4939	832-262-9947
Security	East Handling Terminal or Control Room	281-385-0215 or 0217

3. A Spill Response Contractor will be called if needed.

Facility	Telephone	Services Provided	Most appropriate use:
1. Primary: Garner Environmental Services	281-930-1200 Toll Free: 800-424-1716	Full-scale spill response contractor (spill containment and collection equipment).	Product recovery, containment, and all phases of clean up.
2. Secondary: Anderson Pollution Control, Inc.	281-479-5300 24 Hr. 866-609-6208	Emergency Response, Oil Spill Control, Remediation of Soil and Groundwater, Industrial Services, etc.	Product recovery, containment, and all phases of clean up.

4. SPILL REPORTING will be completed – MANDATORY if these triggers are met:

Agency	Phone	Reporting Trigger:	Time Limit:	Who Reports:
Federal Response Agency)	**800-424-8802**	Discharge or threat of discharge to waterway.	1 HOUR	QI or his delegate
Texas Spill Reporting Hotline	**800-832-8224** ***Same # for both TCEQ (land spills) & TGLO (water spills).***	Spill confined to land: report if greater than 25 gallons. Spill in water or threatens water: any amount.	24 HOURS (land) 1 HOUR (water)	QI or his delegate

5. SPILL REPORTING – DISCRETIONARY / SITUATIONAL:

Agency	Phone	Reporting Trigger:	Time Limit:	Who Reports:
Marine Safety Office (MSO) Houston – Galveston	**713-671-5199**	The MSO will be notified by the National Response Center, but a direct call is also recommended, especially if the spill affects the Houston Ship Channel (HSC).	1 HOUR	QI or his delegate
Fire Department	**911**	Fire or threat of fire, depending on coordination with (and availability of) the internal Emergency Response Team (ERT).	ASAP	Any authorized employee
Police	**911**	Acts of vandalism, need for crowd control, spill in the public right-of-way.	ASAP	Any authorized employee
Region VI **Environmental Protection Agency**	**214-665-6444 (General Info.) 866-EPA-SPILL (Spill Alert) 866-372-7745**	Direct lines, may be contacted directly if necessary (are also notified by the National Response Center(NRC))	None imposed if NRC is called.	Emergency Health & Safety (EHS) Manager or delegate if instructed

6. SPILL RESPONSE INFORMATION ASSETS – Additional Resources

Entity	Contact	Appropriate Use:	Time Limit:	Who Can Call:
The WCM Group, Inc. www.wcmgroup.com	**281-446-7070**	❑ If the responsible person has regulatory procedural questions during an emergency. ❑ If on-site employees have regulatory questions and cannot reach the EHS.	Any time if needed.	Any authorized employee.

Entity	Contact	Appropriate Use:	Time Limit:	Who Can Call:
Weather Reports (Local)	http://www.srh.noaa.gov/forecast/MapClick.php?CityName=Deweyville&state=TX&site=LCH [1]	❑ May be accessed if there's a need to know if weather might affect spill response (e.g., incoming rain).	None imposed.	Any employee
Regional Highway Traffic	http://traffic.houstontranstar.org/layers	❑ The URL at right might be useful in the event of spill response resources arriving from in and around Houston.	None imposed.	Any designated employee with internet.
Oiled Wildlife Response Team (in the event that an off-site spill impacts a wildlife, especially waterfowl)	Sharon Schmalz League City, TX **281-332-8319** http://www.wrande.org/	❑ Alternate: Rhonda Murgatroyd 713-705-5897. ❑ These volunteers are endorsed by the Texas General Land Office.	None imposed.	Employees should check with supervisor.

33 CFR 154.1035 (b)(1)(ii) Agency Notification Checklist and Form

In the event of a spill, the Qualified Individual/Alternate (QI/AQI) will supply the agencies with the information listed on the reporting sheets contained in the BLANK FORMS supplemental appendix to this FRP (Appendix X). During training, employees will be made aware that it is not necessary to gather every piece of form-requested information before making initial contact with regulatory agencies. Additional information will be forwarded to all agencies as it is received.

33 CFR 154.1035 (b)(2) Spill Mitigation Procedures

The principal role of the facility is first response. First response actions, to be directed by the QI/AQI (or the Person In Charge (PIC) in his absence), will include stopping and containing a spill to the extent possible using on-site resources. If a spill is restricted to land, facility personnel will use sorbent materials from stockpiles in the warehouse to remedy the spill. Available hand tools or heavy equipment will be used to construct an earthen berm between the spill and water, if needed. The need for temporary on-site construction will depend on the characteristics and location of the spill). If a small spill reaches the water, facility personnel will use sorbent materials from the warehouse to remedy the spill and obtain the services of the primary Oil Spill Removal Organization (OSRO; Garner Environmental Services) to deploy spill boom. After initial containment is achieved, the facility will utilize one or more OSROs to remediate the discharge.

Dispersants will never be used during a spill response unless authorized by the appropriate state and federal regulators.

[1] Provision of external URLs is not intended as an endorsement.

33 CFR 154.1035 (b)(2)(i)(A) Volume of Average Most Probable Discharge

For discharge calculations, see Appendix III.

33 CFR 154.1035 (b)(2)(i)(B) Volume of Maximum Most Probable Discharge

For discharge calculations, see Appendix III.

33 CFR 154.1035 (b)(2)(i)(C) Volume of Worst-Case Discharge (Marine Transportation Related (MTR))

Marine Transportation related discharge is non-applicable.

33 CFR 154.1035(b)(2)(i)(D) Volume of Worst-Case Not Transportation Related (NTR) Discharge

For discharge calculations, see Appendix III.

33 CFR Part 154.1035(b)(2)(ii) Procedures to Mitigate or Prevent Discharge or Emergency

(A) Failure of Manifold, Transfer Equipment, Hoses, or Loading Arm

Failure of manifold, transfer equipment, hoses, or loading arm would most likely result in a spill of volume corresponding to the Average Most Probable or Maximum Most Probable discharges. Procedures to mitigate a spill in this size range would be similar to the WCD described above, although a smaller mobilization of personnel and equipment would likely be required.

(B) Tank Overfill

It is extremely unlikely that a spill to water will occur on account of a tank overfill both because of the automation of the transfer system, and because of the size of secondary containment. Instrumentation is tied into a DCS (distributed control system) that monitors tank levels and temperatures. If tank filling results in an unacceptably high-level state, this computerized system closes the loading valve. In addition, the DCS operator can see a graphical representation of the product level rising in the tank, and so has visual cues in addition to feedback from the operators.

Should the various components of this system fail and a tank be overfilled, discharge would initially enter secondary containment. It is not likely that secondary containment would be breached during a tank overfill event because the pumping would have to proceed for an inordinately long period of time for this to happen.

(C) Tank Failure

In the event of a tank failure, a worst-case discharge is anticipated. The bulk of the spill would probably be restricted to secondary containment, for but there could be considerable impact to navigable waters due to the sheer size of the larger tanks in the tank farm. If that containment structure breached and a portion of the spilled oil reaches water, facility response procedures would be initiated:

1. The Operator first on scene would radio his or her superior, who would in turn contact other operations personnel on shift and the QI/AQI.
2. The QI would immediately call the primary OSRO (Garner) and the security desk.
3. Regulatory agency notifications would be made.
4. Response would proceed upon arrival of the OSRO. The primary OSRO's main facility is located near the facility, so a fast arrival time would be anticipated.

See also the narrative in (b)(2)(i)(D) for further discussion of worst-case discharge.

(D) Piping Rupture
(E) Piping Leak

Response to a piping leak would proceed resemble response to a piping rupture to the extent that separate description is not warranted; the main difference would probably be in the volume of product discharged, with rupture releasing a larger amount. In both cases, response would depend very much on where the breach occurred. Spill remediation would take place within the boundaries of the facility. The line leak or breach would be isolated and repairs coordinated through the Operations Supervisor for the facility, and the OSRO would be called for clean-up.

(F) Explosion and/or Fire

Fire or the imminent threat of fire would prevent facility personnel from enacting spill containment procedures until the danger to personnel was minimized; human safety is always the primary concern. The facility does have considerable resources for fighting any fires that do occur. Enterprise maintains an emergency response team (ERT) capable of responding to a wide variety of internal emergencies. The primary OSRO (Garner) also has extensive competency in (and resources) for firefighting. If necessary, outside resources would be called.

(G) Equipment Failure

In the event of pumping system or relief valve failure leading to a discharge of oil, facility personnel will first manually close valves to isolate the damaged portion of the system. Repairs to the damaged equipment will be coordinated with the Operations Supervisor. Transfer operations will not resume until equipment is repaired and tested. The OSRO would be called for clean-up.

33 CFR Part 154.1035(b)(2)(iii) Equipment List and Personnel - Average Most Probable Discharge

For equipment list and personnel, see Appendix II.

33 CFR Part 154.1035(b)(3) Facility's Response Activities

(i) Response Activities Prior to Arrival of the Qualified Individual

Prior to the arrival of the Qualified Individual, the PIC will provide oversight for response activities. These activities will include the use of boom, sorbent materials or other response activities deemed appropriate (such as berm construction if part or all of the spill is retained on land). Personnel will be in radio and/or cellular telephone contact with the Qualified Individual and will advise him of response activities underway before his arrival.

(ii) Qualified Individual's Authority and Responsibility (incorporates 40 CFR 112.20(h))

The Qualified Individual (QI) is the Manager, East/West Storage (Mr. Zac Futerfas)

Home Address (info required by EPA)	**Mailing Address**
(b) (6) (b) (6)	PO Box 573 Mont Belvieu, TX 77580

The duties for which the QI is directly responsible (either directly or through the Spill Response Team, Appendix IX), include the following:

- QI must activate internal alarms and hazard communications systems to notify all facility personnel
- QI must identify the character, exact source, amount, and extent of release, as well as other items needed for notification of regulatory agencies
- QI must notify and provide necessary information to the appropriate Federal, State, and local authorities with designated response roles, including the National Response Center, State emergency response commission, and local planning committee
- QI must assess the interaction of the spilled substance with water and/or other substances and notify response personnel at the scene of that assessment
- QI must assess the possible hazards to human health and the environment due to the release. This assessment must consider both the direct and indirect effects of the release (i.e., the effects of any toxic, irritating, or asphyxiating gases that may be generated, or the effects of any hazardous surface water runoffs from water or chemical agents used to control fire and heat-induced explosion)
- QI must assess and implement prompt removal actions to contain and remove the substance released
- QI must coordinate rescue and response actions as previously arranged with response personnel
- QI must use authority to immediately access company funding to initiate cleanup activities

- QI must direct cleanup activities until properly relieved of this responsibility

The Alternate Qualified Individual (AQI) is Mr. Tim Jones. One or the other of these individuals is on call at all times. Both have cellular telephones, and reside within the area, such that they should be capable of arriving at the facility within one hour of notification. Copies of the designation for these individuals to serve as QI and AQI respectively are contained in Appendix I).

The QI has the authority to call out as many OSROs as he judges necessary. The primary OSRO, with which the facility has a response agreement, Garner Environmental Services. A copy of the agreement between the facility and this OSRO is contained in Appendix II).

The QI will serve as primary liaison with the Federal On-Scene Coordinator (FOSC), State On-Scene Coordinator (SOSC), and local emergency agency representatives (e.g., Local Emergency Planning Committee (LEPC)). If necessary, the QI will appoint other personnel to assist with this function (see Spill Management Team, Appendix IX; the Health, Safety & Environmental Director is knowledgeable about the regulatory framework, and could provide efficient regulatory agency interface).

In the early stages of spill response (e.g., within the first 24 hours), it is often necessary to arrange down-payments (e.g., mobilization charges) with responding OSROs. A response agreement has been prearranged with the primary OSRO (see Appendix II). The QI has the authority to directly obligate any additional facility funds needed for the purposes of an oil spill cleanup.

(iii) Organizational Structure

(A) - (H) Corporate Command, Public Information, Safety, Liaison, Operations, Planning, Logistical Support and Finance.

see Appendix (IX) for Spill Team structure that incorporates Incident Command System (ICS).

(iv) Oil Spill Removal Organizations

The primary OSRO is Garner Environmental Services. The facility intends to rely on this or another available qualified OSRO for the bulk of response and cleanup. If the primary OSRO is unavailable or additional resources are required, additional OSROs will be contacted. OSRO phone numbers are listed on the emergency contact sheet at the front of this FRP (b)(1).

OSRO Organization. The organization of OSROs generally varies from firm to firm, but the following titles and basic organizing principles are common:

OSRO base dispatch
- handles communication from the home offices/warehouses
- receives requests from the Field Commander for additional equipment
- dispatches additional equipment and personnel to the site as instructed

OSRO Field Commander:
- oversees response personnel
- responsible for his teams health and safety
- communicates with facility's QI regarding status of spill
- provides advice regarding continuing response actions

On-Water Responders
- Not applicable – no navigable body of water

On-Land Responders
- generally deployed in buddy teams
- physically remove oil from shorelines and affected areas
- for larger responses, teams will often have a separate supervisor

***33 CFR Part 154.1035*(b)(3)(iv)(A) Equipment and Supplies**

Equipment and supplies are discussed in the paragraph above are appropriate for use in this geographic location and climate. Adverse weather (excluding hurricanes) for the HSC would include wind of 30 m.p.h., air temperature of 40°F and wind-induced wave chop. In midwinter, morning fog could add to adverse conditions.

33 CFR Part 154.1035(b)(3)(iv)(B) Trained personnel

The role of facility personnel will largely be limited to that of first responder. Facility personnel are thoroughly trained in their day to day duties by several means. First, new employees are given general training, which includes emergency response training. New employees undergo an extensive period of extra supervision as they learn about the facility and their own duties and responsibilities. Most of the operators employed by this facility were previously employed by other petrochemical facilities, and have extensive job experience. Oil Pollutant Act (OPA) 90 training topics are discussed in section (c) of this FRP.

The majority of the spill response personnel will be supplied by Oil Spill Removal Organizations (OSROs), who maintain their own training programs. In accordance with the regulations, all OSROs are classified based on capacity to respond to oil spills. As part of this rating program, USCG ensures that commercial oil spill responders receive training pursuant to 29 CFR 1910.120.

***33 CFR Part 154.1035*(b)(3)(v)** Spill Management Team Job Descriptions

The Spill Management Team and Job description information is included in Appendix IX.

***33 CFR Part 154.1035*(b)(3)(vi)** For facilities that handle, store, or transport Group II through Group IV petroleum oils, and that operate in waters where dispersant use is pre-authorized, this subsection of the plan must also separately list the resource providers and specific resources, including appropriately trained dispersant-application personnel, necessary to provide the dispersant capabilities required in this subpart. All resource providers and resources must be available by contract or other approved means as described in §154.1028(a). The dispersant resources to be listed within this section must include the following:

> (A) Identification of each primary dispersant staging site to be used by each dispersant-application platform to meet the requirements of this subpart.
>
> (B) Identification of the platform type, resource-providing organization, location, and dispersant payload for each dispersant-application platform identified. Location data must identify the distance between the platform's home base and the identified primary dispersant staging site for this section.
>
> (C) For each unit of dispersant stockpile required to support the effective daily application capacity (EDAC) of each dispersant-application platform necessary to sustain each intended response tier of operation, identify the dispersant product resource provider, location, and volume. Location data must include the stockpile's distance to the primary staging sites where the stockpile would be loaded onto the corresponding platforms.
>
> (D) If an oil spill removal organization has been evaluated by the Coast Guard, and its capability is equal to or exceeds the response capability needed by the owner or operator, the section may identify only the oil spill removal organization,

and not the information required in paragraphs (b)(3)(vi)(A) through (b)(3)(vi)(C) of this section.

***33 CFR Part 154.1035*(b)(3)(vii)** This subsection of the plan must also separately list the resource providers and specific resources necessary to provide aerial oil tracking capabilities required in this subpart. The oil tracking resources to be listed within this section must include the following:

(A) The identification of a resource provider; and

(B) Type and location of aerial surveillance aircraft that are ensured available, through contract or other approved means, to meet the oil tracking requirements of §154.1045(j).

***33 CFR Part 154.1035*(b)(3)(viii)** For mobile facilities that operate in more than one Captain of the Port (COTP) zone, the plan must identify the oil spill removal organization and the spill management team in the applicable geographic-specific appendix. The oil spill removal organization(s) and the spill management team discussed in paragraph (b)(3)(iv) of this section must be included for each COTP zone in which the facility will handle, store, or transport oil in bulk.

***33 CFR Part 154.1035*(b)(3)(ix)** For mobile facilities that operate in more than one COTP zone, the plan must identify the oil spill removal organization and the spill management team in the applicable geographic-specific appendix. The oil spill removal organization(s) and the spill management team discussed in paragraph (b)(3)(iv)(A) of this section must be included for each COTP zone in which the facility will handle, store, or transport oil in bulk.

33 CFR Part 154.1035(b)(4) Fish and Wildlife Sensitive Areas

(i) Discussion of Economically and Environmentally Sensitive Areas

Coastal sensitivity information is summarized for quick reference in map and tabular form in Appendix VIII of this FRP. The facility, in conjunction with its consultant, uses the Texas Coastal Oil Spill Planning and Response Toolkit (2011 version, available in CD-ROM and also online at http://gisweb.glo.texas.gov/atlas/masterpage.pdf). See Appendix VIII for further information.

(ii) Worst Case Discharge

(A) All fish and wildlife and sensitive environments which are potentially impacted by a discharge of persistent oils, non-persistent oils, or non-petroleum oils are identified in Appendix VIII .

(B) Sensitive Areas Protective Actions

The facility's plan for protecting these sensitive areas in the event of a spill is as follows:

(1) A map of sensitive areas potentially impacted by a spill is provided in Appendix VII. The map includes response actions that the facility anticipates taking to protect these areas and a legend of activities.

(2) Identify the appropriate equipment and required personnel to protect all fish and wildlife and sensitive environments in the Area Contingency Plan (ACP) for the distances, as calculated in paragraph (b)(4)(iii)(B) of this section, that the persistent oils, non-persistent oils, or non-petroleum oils are likely to travel in the noted geographic area(s) and number of days listed in table 2 of Appendix C of this part.

(3) The appropriate equipment and required personnel to protect all fish and wildlife and sensitive environments are identified in Appendix VII and Appendix IX.

***33 CFR Part 154.1035*(b)(4)(iii)(B)(1)(i) Persistent Oils in Non-Tidal Environment, 48-Hr Projection**

This section is not applicable.

***33 CFR Part 154.1035*(b)(4)(iii)(B)(1)(ii) Persistent Oils in Tidal Environment, Fifteen Mile Projection**

This section is not applicable.

***33 CFR Part 154.1035*(b)(4)(iii)(B)(1)(iii) Non-Persistent Oils in Non-Tidal Environment, 24-Hr Projection**

This section is not applicable.

***33 CFR Part 154.1035*(b)(4)(iii)(B)(1)(iv) Non-Persistent Oils in Tidal Environment, Five Mile Projection**

This section is not applicable.

***33 CFR Part 154.1035*(b)(4)(iii)(B)(2) Spill Trajectory/Other Protected Areas**

Spill trajectory models are not readily available for this geographic area, and were not utilized for this assessment.

33 CFR Part 154.1035(b)(4)(iii)(B)(3) EPA Regulation for On-Shore Facilities

The procedures contained in the Environmental Protection's Agency's regulations on oil pollution prevention for NTR onshore facilities at 40 CFR part 112, Appendix C, Attachment C-III were not used for this plan.

33 CFR Part 154.1035(b)(5) Disposal Plan

See paragraph (b)(2)(i)(D) for description of disposal options and resources.

The OSRO will assist in meeting all applicable regulations regarding waste disposal, and waste disposal will be contracted to the OSRO as appropriate. Recycling of recovered materials will be used to the extent possible. The QI and AQI will assist with recycling arrangements if necessary.

33 CFR Part 154.1035(c) TRAINING AND DRILLS

(1) Training Procedures

Facility personnel are trained for spill preparedness during regular on-the-job training. Training procedures and programs for this plan meet the requirements outlined in 33 CFR 154.1050. This FRP manual itself can be utilized for training and refresher resource. The facility will not employ casual laborers or volunteers during spill response; human resources will be obtained as needed through the facility and/or an OSRO. The primary OSRO will assure that its employees have met the training requirements of 29 CFR 1910.120 and recordkeeping requirements of 33 CFR 154.1050.

The facility will keep records of personnel training and will make those records available to the Coast Guard upon request. Training records for facility personnel, including those for the Qualified Individual, will be maintained by the facility for a period of **three years**. In addition, the facility will keep records of employees' work experience relevant to their operational duties.

The content of the training program and applicable records are stored in Appendix XIII.

(2) Exercise Procedures

This section provides a description of the exercise program carried out at the facility as described in Section 154.1055 Exercises. The following Preparedness for Response Exercise Program (PREP) drill schedule will be observed. The facility is not a coastal facility; therefore, the schedule is adjusted as follows:

Type of Drill	Schedule
Notification drills, facility personnel and Qualified Individual [154.1055(a)(1)]	Quarterly
Equipment deployment drills[154.1055(a)(3)]	N/A
Spill management team tabletop drills [154.1055(a)(2)]	Annually
Unannounced drill [154.1055(a)(5)]	Every 3 years
Exercise of entire FRP [154.1055(e)]	Every 3 years
COTP drills [154.1055(b)]	N/A

Note: At least one drill in the table will be unannounced annually [33 CFR 154.1055(a)(5)]

The Preparedness for Response Exercise Program (PREP) guidelines will be observed for the execution of these drills. The details are contained in the PREP manual[2] and are not repeated here. Drill records will be retained for at least three years after the drills have taken place [154.1055(d)].

For reference, the following section summarizes the FIFTEEN CORE COMPONENTS of the PREP. (PREP drill logs request to know which elements were exercised during any particular drill):

1. NOTIFICATIONS: Test notification procedures identified in the Area Contingency Plan and the associated Responsible Party Response Plan.

2. STAFF MOBILIZATION: Demonstrate the ability to assemble the spill response organization identified in the Area Contingency Plan and associated RP Response Plan.

3. ABILITY TO OPERATE WITHIN THE RESPONSE MANAGEMENT SYSTEM DESCRIBED IN THE PLAN: This includes working under the unified command system and the response management system described in the plans.

4. DISCHARGE CONTROL: Demonstrate the ability of the spill response organization to control and stop the discharge at the source.

5. ASSESSMENT: Demonstrate the ability of the spill response organization to provide an initial assessment of the discharge and to provide continuing assessments of the effectiveness of the tactical operations.

[2] The manual is available here: http://www.uscg.mil/hq/g-m/nmc/response/msprep.pdf

6. CONTAINMENT: Demonstrate the ability of the spill response organization to contain the discharge at the source or in various locations for recovery operations.

7. RECOVERY: Demonstrate the ability of the spill response organization to recover the discharged product.

8. PROTECTION: Demonstrate the ability of the spill response organization to protect the environmentally and economic sensitive sites identified in the Area Contingency Plan and the respective industry response plan.

9. DISPOSAL: Demonstrate the ability of the spill response organization to dispose of the recovered materials and contaminated debris.

10. COMMUNICATIONS: Demonstrate the ability to establish an effective communications system for the spill response organization.

11. TRANSPORTATION: Demonstrate the ability to provide effective multi-mode transportation for both execution of the discharge response and for support functions.

12. PERSONNEL SUPPORT: Demonstrate the ability to provide necessary support of all personnel associated with the response.

13. EQUIPMENT MAINTENANCE AND SUPPORT: Demonstrate the ability to maintain and support all equipment associated with the response

14. PROCUREMENT: Demonstrate the ability to establish an effective procurement system.

15. DOCUMENTATION: Demonstrate the ability of the spill response organization to document all operation and support aspects of the resource and provide detailed records of decisions and actions taken.

NOTE: This summary provides general information only and does not go into detail regarding each component.

33 CFR Part 154.1035(d) PLAN REVIEW & UPDATE

The FRP will be reviewed annually and the review will incorporate any revisions to the plan, including listings of fish and wildlife sensitive environments identified in the Area Contingency Plan (ACP) in effect 6 months prior to plan review [33 CFR 154.1065(a)].

A copy of any revisions made will be submitted to EPA – Region VI, along with a cover letter explaining the changes. If no revisions are necessary, a notation will be provided in the Record of Changes section at a minimum. Appendix X (Blank Forms) contains a form that may be used for recording plan reviews and changes [33 CFR 154.1065(a)(2)(i),(ii)].

In the event of material changes in the facility configuration, types of oil handled, identity of the OSRO(s), emergency response procedures, or facility operating area, this FRP will be updated, and an explanation of the changes submitted to the EPA – Region VI within 30 days of the changes occurring [33 CFR 154.1065(b)(1-6)].

33 CFR Part 154.1035(e) APPENDICES

There are several appendices to this plan. These paragraphs describes the appendices required by 33 CFR 154.1035(e)

33 CFR Part 154.1035(e)(1) Facility-Specific Information

(i) Physical Description and Plan

A plan of the facility is included in Appendix VII. Transfer locations, locations of safety equipment, and control stations are marked on facility diagrams and maps in Appendix VII.

(ii) Sizes, Types, and Numbers of Vessels

This section is not applicable.

(iii) Valve Locations

Pump stations, valves, and control locations are shown on general maps as well as process and instrumentation diagrams maintained by the facility with copies of select diagrams provided in Appendix VII.

(iv) Material Safety Data Sheets (MSDSs) (including subparts A-E)

The facility maintains MSDS for all products routinely handled at the facility as of the date of this FRP. Facility operators are familiar with the properties and potential hazards associated with these products. MSDS Sheets are provided in Appendix XV for all products currently handled.

(v) Other Information

This section is not applicable to this plan.

33 CFR Part 154.1035(e)(2) List of Contacts

(i) Primary and Alternate Qualified Individuals

The list of Primary and Alternate Qualified Individuals is provided in Section 33 CFR 154.1035(b)(1) [Page 3] of this plan.

(ii) Contacts for Activation of Response Resources

Contacts are provided in Section 33 CFR 154.1035(b)(1) [Pages 3 and 4] of this plan.

(iii) Federal, State, and Local Officials

Federal State and Local offices are provided in section 33 CFR 154.1035(b)(1) [Page 4] of this plan.

33 CFR Part 154.1035(e)(3) Equipment Lists and Records

(i) Equipment for Response to Average Most Probable Discharge

An MTR Average Most Probable discharge, being of relatively small volume, would likely require a minimum of hardware and personnel resources. Response equipment would consist of miscellaneous tools, and sorbent materials as needed. The OSRO would be called and would supply containment boom and additional personnel and equipment, if needed.

(ii) Oil Spill Removal Organization's Equipment for Worst Case Discharge

The primary OSRO has been certified, and maintains sufficient resources to respond to a worst-case discharge. A list of equipment is included in Appendix II. Alternate OSROs are listed in Appendix II.

(iii) Equipment List and Specifics (including subparts A-H)

The primary OSRO has been classified by the USCG, so their equipment is not detailed in this FRP. OSRO contracts are contained in Appendix II. Appendix II includes equipment belonging to the OSRO which would be sufficient to mitigate a Worst-Case Discharge as it is defined in this FRP.

33 CFR Part 154.1035(e)(4) Communications Plan

Two-way radios which meet Class 1, Division 1, Group D requirements as defined in 46 CFR 110.83 as they are approved by Underwriter's Laboratories or Factory Mutual to be intrinsically safe for use in all hazardous environments will be used.

Internet conductivity is available in the offices and control room. The main FAX machine is also present in the office building, which would serve as the command center for a large spill incident.

The facility has established the following communications protocols:

- Notifications of on-site personnel are to be made using direct voice contact and by using the portable radios described above. This system is used extensively during daily operations so personnel are familiar with it.

- Notifications of off-site personnel will be made with the telephone and in accordance with the Chain-Of-Command presented in this report [section (b)(1)]. The facility has a designated on-call protocol for non-business-hours response to any problems. Government response agencies will also be contacted by telephone. As mentioned above, communications equipment includes on-site FAX and Internet, ensuring efficient information transfer.

- Notifications of neighboring or co-located facilities, if necessary, will be made by the QI, using the telephone or radio.

- Upon arrival of the OSRO at the facility, the facility office will be used as the command and communications center. The OSRO will have its own communications protocol.

33 CFR Part 154.1035(e)(5) Site-Specific Safety and Health Plan

The facility has developed Standard Operating Procedures (SOPs) and a site-specific Health and Safety Plan (HASP) to address its operations. The facility may supplement its own operator work force with responders from other Enterprise facilities in the area such as Mont Belvieu, Pasadena, OTTI, etc.

The OSROs maintain independent health and safety plans.

33 CFR Part 154.1035(e)(6) Acronyms

ACP	Area Contingency Plan
AQI	Alternate Qualified Individual
AST	Aboveground Storage Tank
bbl(s)	barrels(s); one barrel equals 42 gallons
BOA	Basic Ordering Agreement
CGOM	U.S. Coast Guard Operations Manual (33 CFR 154).
CHRIS	Chemical Hazards Response Information System
COTP	Captain of the Port
DCO	Discharge Cleanup Organization (as defined by the TX General Land Office)
DCS	Distributed Control System
DEQ	Louisiana Department of Environmental Quality
DNR	Louisiana Department of Natural Resources
EDAC	Effective Daily Application Capacity
EPA	Environmental Protection Agency
ERAP	Emergency Response Action Plan
ERT	Emergency Response Team
ESD	Emergency Shutdown Devices
FOSC	Federal On-Scene Coordinator
FRP	Facility Response Plan
gal(s)	gallon(s)
GLO	Texas General Land Office
HASP	Health and Safety Plan
HSC	Houston Ship Channel
ICS	Incident Command System
ICWW	Intracoastal Waterway
LCP	Local Contingency Plan
LEPC	Local Emergency Planning Committee
MOU	Memorandum of Understanding
MSDS	Material Safety Data Sheet
MSO	Marine Safety Office

MTR	Marine Transportation Related
NCDC	National Climatic Data Center
NCP	National Contingency Plan
NRC	National Response Center
NTR	Not Transportation Related
OPA 90	Oil Pollution Act of 1990
OSPRA	Texas Oil Spill Prevention and Response Act
OSRO	Oil Spill Removal Organization (as defined by the USCG)
PIC	Person In Charge
PREP	Preparedness for Response Exercise Program
QI	Qualified Individual
RRC	Railroad Commission (Texas)
SERC	State Emergency Response Committee
SIC	Standard Industrial Classification
SOP	Standard Operating Procedures
SOSC	State On-Scene Coordinator
SPCC	Spill Prevention, Control, and Countermeasures Manual (Separate Document)
TGLO	Texas General Land Office
USCG	United States Coast Guard
VRP	Vessel Response Plan
WCD	Worse Case Discharge

APPENDIX I

ALTERNATE AND QUALIFIED INDIVIDUAL LETTERS OF AGREEMENT

Alternate and Qualified Individual Letters of Agreement

This appendix contains the following:

☒ Document designating the referenced individuals.

❑ Other: _____

❑ Other: _____

Date of Manual Entries into this Appendix	***Comments and/or Content***

❑ If excess material from this Appendix is kept in a file instead of behind this tab, please complete the following:

Name of file: _____
Storage location: _____
Dates covered: _____
Contents: _____

Facility Response Plan
Designation of Qualified Individual/Alternate Qualified Individual

As required by 33 CFR 154.1026(a) Zac Futerfas or Dale Conn

is herby designated as the Qualified Individual (QI)/Alternate Qualified Individual (AQI) for the Enterprise Products Operating LLC Pasadena Facility Response Plan.

The QI designated herein is:

- Available on a 24-hour basis;
- Located in the United States;
- Able to arrive at the facility in a reasonable time;
- Speaks fluent English; and is,
- Trained in the responsibilities of the QI/AQI.

As QI/AQI; Zac Futerfas or Dale Conn is authorized to:

1. Activate and engage in contracting with oil spill removal organizations;
2. Act as liaison with pre-designated on-scene coordinator;
3. Obligated funds required to carry out responsibilities

Signatures:

Qualified Individual/Alternate Qualified Individual

Zac Futerfas
Printed Name

Signature

Manager, Storage
Title

5/24/12
Date

Enterprise Products Operating LLC

Dale Conn
Printed Name

Signature

Supervisor, Storage
Title

5/24/12
Date

APPENDIX II

OSRO LETTERS OF AGREEMENT AND INVENTORY

This appendix contains the following:

☒ Copy of the Garner Environmental Services (Primary) and Anderson Pollution Control, Inc. (Secondary) contracts.

❑ Other: _____

❑ Other: _____

Date of Manual Entries into this Appendix	***Comments and/or Content***

❑ If excess material from this Appendix is kept in a file instead of behind this tab, please complete the following:

Name of file: _____
Storage location: _____
Dates covered: _____
Contents: _____

WORK CONTRACT NO. 2028
ORIGINATOR ALVARO PARRA
(Type/Print Department and Location)

ENTERPRISE PRODUCTS OPERATING L.P.

SERVICE AGREEMENT (Rev. 08/98)

THIS CONTRACT is entered into this 15th day of March, 2004, in the City of Houston, Harris County, Texas, between ENTERPRISE PRODUCTS OPERATING L.P., a Delaware limited partnership, P. O. Box 4324, Houston, Texas 77210-4324 ("Company"), and:

GARNER ENVIRONMENTAL SERVICES, INC.
(Full Legal Name)

a Texas Corporation
(State) (Corporation, Partnership or Sole Proprietorship)

1717 West 13th Street
(Address)

Deer Park, Texas 77536 ("Contractor").
(City) (State) (Zip)

IN CONSIDERATION of the mutual promises in this Contract and other good and valuable consideration, the parties agree as follows:

I. APPROVED CONTRACTOR LIST Upon execution of this Contract by Contractor and Company, Contractor shall be included on Company's Approved Contractor List, indicating Contractor's eligibility to perform Work for Company; and Company and Contractor agree that this Contract shall remain in force until terminated as provided by its terms.

II. DEFINITIONS "Contract" and "Agreement" mean this Contract and any subsequent oral or written Work order or agreement (together with any drawings, specifications or other exhibits attached to it) between the parties for Work. "Work" means all labor, goods, materials and services required to be performed and furnished by Contractor under any Agreement.

III. PERFORMANCE Contractor represents and warrants that all Work shall be in strict accordance with and subject to all Contract terms and conditions, that it has adequate equipment in good working order and fully trained personnel capable of efficiently operating such equipment or performing any services provided under any Agreement, and that all Work shall be performed in a good and workmanlike manner, satisfactory and acceptable to Company. Contractor represents and warrants that it shall be able to fulfill all of its obligations under any Agreement with no degradation in performance due to the calendar change from 1999 to 2000 and beyond January 1, 2000.

IV. INDEPENDENT CONTRACTOR Contractor is and shall be an independent contractor with respect to Work, and neither Contractor nor its employees or subcontractors or their employees shall be deemed, for any purpose, to be the employee, agent, servant, or representative of Company in the performance of Work. Company shall have no direction or control of the Contractor or its employees and agents except in the results to be obtained. Work shall conform with all applicable specifications and meet the approval of Company and shall be subject to the general right of inspection by or for Company. The actual performance and superintendence of Work shall be by Contractor, but Company or its representative shall have unlimited access to Contractor's operations to determine whether Work is being performed by Contractor in accordance with the Contract.

V. EMPLOYMENT CONTRIBUTIONS AND BENEFITS Contractor agrees to accept full and exclusive liability for the payment of and to pay when due any and all premiums, contributions and taxes for Workers= Compensation Insurance and Unemployment Insurance and for old age pensions, annuities and other retirement benefits imposed by or pursuant to Federal or State law and measured by the wages, salaries or other remuneration paid to persons employed by Contractor; and Contractor further agrees to indemnify and hold Company harmless against any liability for any such premiums, taxes or contributions which may be assessed against Company with respect to Contractor, its employees or subcontractors.

VI. TAXES AND FEES ***All domestic federal, state and municipal taxes, except income taxes and ad-valorem taxes, now and hereinafter imposed with respect to services rendered, to rental equipment, to the processing, manufacture, repair, and to the delivery and transportation of equipment and supplies will be added to and become part of the total price payable by the Company. If Company claims an exemption from payment of Texas Sales and Use Tax, Company will be required to render an Exemption Certificate or a Resale Certificate to Garner Environmental Services, Inc. for said exemption to apply to the services rendered. If for any reason the services rendered result in the assessment of foreign income taxes, excise taxes, or other fees alleged as owing to a foreign state or government, Company will pay directly the amount of any assessment or fee. In the event Contractor pays any such foreign tax or fee directly, Company will promptly reimburse Contractor for same.***

VII. LABOR AND MATERIAL Contractor shall pay all claims for labor and material related to the Work and shall not permit any liens of any kind to be fixed against the property of Company or the property of others arising out of claims of Contractor, its employees, mechanics, materialmen, or subcontractors; and upon the completion of the Work, Contractor shall furnish Company with evidence satisfactory to Company of the payment of all such claims. Contractor shall indemnify and hold harmless Company from and against all such claims or liens; and Contractor agrees, that, without waiver of any other rights or remedies available to Company, any sums due to Contractor from Company may be withheld and applied by Company toward the discharge or payment of any such claims or liens.

VIII. PAYMENT FOR WORK Payment for Work shall be as provided in Exhibit II or as provided in any Agreement. Payment for Work performed on a reimbursable-cost basis shall be made by Company to Contractor in accordance with Contractor's then-current rate schedule; Contractor shall furnish Company its rate schedule prior to commencing any such Work and notify Company in writing of any changes in the rate schedule. Neither payment for nor use of Work in whole or in part by Company shall constitute acceptance of any Work or materials which do not conform to Contract terms and specifications or settlement of any unsettled claims, liabilities, duties, liens or other encumbrances. Contractor shall keep accurate books and records of all Work, and, within two (2) years from the completion of Work under a particular Agreement or the termination of this Contract, whichever is earlier, Company or its representative shall have the right to inspect, copy and audit, during Contractor's normal business hours, its books and records of every description for the purpose of determining the accuracy of any charges, claims or demands relating to Work.

IX. COMPLIANCE In the performance of all Work, Contractor warrants and represents that it and its subcontractors shall comply with all applicable statutes, ordinances, rules and regulations, including but not limited to those administered by the U.S. Occupational Safety and Health Administration, the U.S. Environmental Protection Agency, the U.S. Department of Transportation ("DOT") and state agencies exercising concurrent or similar jurisdiction; and Contractor shall indemnify and hold harmless Company from any and all claims or demands of a penal nature or civil penalties which may arise from violation of such statutes, ordinances, rules and regulations by Contractor or any subcontractor employed by it.

X. COMPANY PREMISES Contractor shall conform and shall require its employees, agents and subcontractors to conform, while at or near the location of the Work or on Company's premises, to all requirements of Company, including, but not limited to, Company's rules of conduct, safety rules, contractor safety policies, routes of ingress and egress and other requirements for the protection of persons or property. Contractor shall provide and take all safety precautions which the nature of the Work may require or indicate and keep the Work location free from accumulations of waste and rubbish. Upon completion of all Work, Contractor shall clean up and dispose all waste and rubbish generated by it or its subcontractors, collect unused material belonging to it or its subcontractors, and restore the location to as clean and orderly a condition as existed prior to commencement of the Work.

XI. ACCIDENT REPORTS Contractor shall report to Company in writing, as soon as practicable, all accidents or occurrences resulting in bodily injury, including death, or damage to or destruction of property arising out of or during the course of performance of any Agreement and, upon request, shall furnish Company with copies of all reports made by Contractor to Contractor's insurer or to others of such accidents and occurrences.

XII. DRUG-FREE WORKPLACE A. Contractor and each of its subcontractors performing Work at any Operational Facility shall establish and enforce within its organization an anti-drug program to assure a drug-free workplace. Contractor's anti-drug program shall include provisions for the auditing by Contractor of its subcontractors' anti-drug programs. "Operational Facility" means the entire premises of each Company processing plant, terminal, loading rack, pipeline, storage facility, warehouse, garage, shop, construction location and field worksite.

B. Contractor represents and warrants that it and its subcontractors shall assign and allow to Work at Operational Facilities only employees who have current negative drug screen results under their employer's anti-drug program. A current result is one based on the most recent drug screen performed within 12 months of a day on which Work is to be performed.

C. Before performing Work at any Operational Facility, Contractor shall furnish and cause each of its subcontractors to furnish Company with documentation of their respective anti-drug programs demonstrating that each program meets or exceeds the requirements of Company's Drug, Alcohol and Illegal Items Policy attached hereto as Exhibit III and meets or exceeds the requirements of any applicable law or regulation. Complete records of the anti-drug program shall be kept at Contractor's and each subcontractor's home office, respectively, and be available for audit by Company during regular office hours. Failure or refusal by Contractor or a subcontractor to establish and maintain a satisfactory anti-drug program, keep adequate records of it, or permit Company to audit compliance with it shall be grounds for immediate suspension of Contractor's and its subcontractor's authorization to proceed with Work or termination of this Contract.

D. Before performing Work at any Operational Facility, Contractor and each subcontractor shall certify to Company in a writing signed by an executive officer of the employer that each employee (identified by name, Social Security Number or employee I.D. number and date of drug screen result) who will perform Work at the Operational Facility has a current negative drug screen result under the employer's anti-drug program. Such certification shall be kept current throughout the duration of the Work, and notice of any change in an employee's certified status shall be given by the employer to Company in writing immediately. Company may exclude from Operational Facilities any Contractor or subcontractor employee who does not have a current certification, and any delay in the performance of Work due to lack of properly certified employees will be for the account of Contractor.

E. On any pipeline or other DOT-regulated work, Contractor and its subcontractors shall also furnish Company with written certification of each employee's negative drug screen results under DOT regulations.

XIII. INSURANCE A. Contractor, at its own expense, shall provide and maintain in force with insurance companies acceptable to Company the kinds of insurance and minimum amounts of coverage set forth in paragraph B, below, to cover all loss and liability for damages on account of bodily injury, including death, and damage to or destruction of property caused by or arising from any and all activities carried on or any and all Work performed under any Agreement. Contractor shall cause its insurer to name Certificate Holder as an additional insured on its Auto, General and Excess Liability insurance policies and grant Certificate Holder a waiver of subrogation on its Workers= Compensation insurance policy. "Certificate Holder" shall have the meaning provided in the Certificate Holder Definition in Exhibit IV. If Contractor fails or refuses to carry out any of the provisions of this Article XIII, Company shall, in addition to any right to recover damages or obtain other relief, have the right to suspend Contractor's authorization to proceed with Work or terminate this Contract.

B. 1) WORKERS= COMPENSATION (Including Occupational Disease) and EMPLOYER'S LIABILITY INSURANCE. Contractor's Workers= Compensation and Employer's Liability coverages shall apply to all employees, including borrowed servants, in ccordance with the benefits afforded by the statutory Worker's Compensation Acts, USL & H and Maritime Acts applicable to the State, erritory or District of hire, supervision or place of accident. A waiver of subrogation to Certificate Holder is required. Policy limits ıall not be less than:

Worker's Compensation: Statutory Limits.
Employer's Liability: $500,000, each accident; $500,000 Disease, policy limit; $500,000 Disease, each employee.

2) COMMERCIAL GENERAL LIABILITY INSURANCE, as primary policy over all others, covering premises, operations, products and completed operations, independent contractors, and blanket contractual liability. The policy shall cover all liabilities arising out of explosion, collapse and underground ("XCU") hazards. The policy shall be endorsed to provide broad-form property damage, including completed operations, coverage. An "additional insured" endorsement naming Certificate Holder is required. Policy limits shall not be less than:

Bodily Injury: $500,000 per occurrence, $1 million aggregate.
Property Damage: $500,000 per occurrence, $1 million aggregate.
OR Combined Single Limit (CSL) of $1 million per occurrence, $2 million aggregate.

3) COMPREHENSIVE-AUTOMOBILE LIABILITY INSURANCE, as primary policy over all owned, hired and non-owned automotive equipment. An "additional insured" endorsement naming Certificate Holder is required. Policy limits shall not be less than:

Bodily Injury: $500,000 per person, $500,000 per occurrence/accident.
Property Damage: $500,000 per occurrence.
OR Combined Single Limit of $1 million per occurrence.

4) EXCESS/UMBRELLA LIABILITY INSURANCE, to be primary excess over all others:

____ None. _____ $1 million. _____ $2 million. _____ $3 million. ___X__ $5 million. ___ Other: $_____.

5) Additional insurance and surety limits:

a) ___ NONE REQUIRED.
b) ___ ALL-RISK BUILDER'S RISK POLICY with limits of $_____, Minimum Deductible $_____.
c) ___ CONTRACTOR'S EQUIPMENT FLOATER POLICY
d) ___ OWNER/CONTRACTOR'S PROTECTIVE LIABILITY POLICY with minimum limits of $500,000 CSL.
e) ___ CRANE COVERAGE -- LIFTER'S LIABILITY POLICY with limits of $500,000 CSL.
f) ____ PROFESSIONAL LIABILITY INSURANCE covering acts, errors, omissions, malpractice, as applicable, potentially arising from or pertaining to any Work to be performed by Contractor, its employees, agents or subcontractors; policy limits shall not be less than $1 million per occurrence; OR in lieu of such insurance, Contractor may furnish an irrevocable letter of credit in form and amount and with an issuer satisfactory to Company.
g) ___ PERFORMANCE AND MAINTENANCE BOND. Upon execution of this Contract and prior to commencing performance hereunder, Contractor shall execute, with a surety company satisfactory to Company, a Surety Bond to guarantee completion of the Work within the time provided, the payment of all claims and the fulfillment of all obligations arising, either directly or indirectly, under any Agreement, including but not limited to the defense of all litigation incidental to any Agreement to which Certificate Holder is made a party. The surety limits shall be not less than one hundred percent (100%) of the total estimated contract price or as agreed to by Company. In lieu of such surety bond, Contractor may cause to be issued an irrevocable letter of credit payable to the order of Company in such amount, in a form and with an issuer acceptable to Company; or, if acceptable to Company, Contractor may use a combination of surety bond, letter of credit, or corporate or personal guaranty.
h)_X__ POLLUTION LIABILITY

C. Contractor's insurance policies shall be endorsed as follows and in accordance with state law:

Worker's Compensation policy:

1) Blanket waiver of subrogation, OR 2) "The Insurers hereby waive their rights of subrogation against Certificate Holder and any individual, firm, or corporation, their subsidiaries, factors or assigns for whom or with whom the Assured may be working."

Primary General, Auto and Excess Liability Policies:

1) Blanket additional insured endorsement, OR 2) the Form of Additional Insured Endorsement in Exhibit IV.

D. Contractor represents and warrants that at all times during the term of this Contract it shall have furnished or caused to be furnished to Company an original, current certificate of insurance on forms acceptable to Company (most recent CORD form) reflecting:

1) The kinds and amounts of insurance required above.
2) The insurance company or companies carrying the required coverages.
3) The policy number and the effective and expiration dates of each policy.
4) That Certificate Holder will be given thirty (30)-day prior written notice of any material change in or termination of any policy.
5) That a waiver of subrogation under Contractor's Worker's Compensation policy has been issued to Certificate Holder.
6) That Certificate Holder has been named as an "Additional Insured" on Contractor's primary Auto & General Liability policies and Excess/Umbrella policies.
7) That the Broad Form Property Damage and XCU Coverage Endorsements have been attached to all applicable policies.
8) The territorial limits of all policies.
9) That the indemnification and hold-harmless provisions of this Contract are insured.
10) That the "aggregate" as reported in the policy limits in the Certificate of Insurance, has not been exposed or used up by prior or pending claims.
11) A Certificate Holder notation reading as shown in the Form of Certificate Holder Notation in Exhibit IV.

E. All policies shall provide that the insurance company will notify Certificate Holder not less than thirty (30) days prior to the termination of any policy and before any changes are made which restrict or reduce the coverage provided or change the name of the insured.

F. Contractor represents and warrants that insurance policies with the coverages and limits required in this Contract have been issued to Contractor and shall remain in full force and effect during the term of this Contract and that none of these policies shall be canceled or changed, so as to change the name of the named insured or restrict or reduce the insurance coverages required by this Contract and described by Contractor's certificate of insurance, without thirty (30)-day prior written notice of such cancellation or change being delivered by Contractor to Certificate Holder at the address shown in the Form of Certificate Holder Notation in Exhibit IV.

G. Contractor shall require each of its subcontractors to provide the foregoing coverages as well as any other coverages that Contractor may consider necessary, all to be endorsed with the above-specified waiver of subrogation and additional insured wording; and any deficiency in the coverages, policy limits or endorsements of said subcontractors will be the sole responsibility of Contractor.

H. It is understood and agreed by Contractor and Company that the coverages granted to the Certificate Holder "additional insured" in Contractor's policies of insurance as required in this Contract are to apply on a primary basis over all other valid and collectible insurance owned by and or available to the "additional insured." It is further understood and agreed by Contractor and Company that such coverages provided by Contractor to the "additional insured" are applicable to liability associated with the operations, products, completed operations, premises, equipment and or vehicles contemplated by this Contract. Contractor shall be solely responsible for any deductible or self-insured retention associated with the coverages granted to the Aadditional insured.@

XIV. INDEMNITY **EXCEPT AS EXPRESSLY LIMITED IN THIS CONTRACT, CONTRACTOR SHALL INDEMNIFY, DEFEND AND HOLD HARMLESS COMPANY, ITS DIRECTORS, OFFICERS, AGENTS AND EMPLOYEES AND THEIR SUCCESSORS, HEIRS AND ASSIGNS ("INDEMNIFIED PARTIES") FROM AND AGAINST ANY AND ALL CLAIMS, LOSSES, DAMAGES, CAUSES OF ACTION, SUITS, AND LIABILITY OF EVERY KIND AND CHARACTER (INCLUDING, BUT NOT LIMITED TO, ALL COSTS OF DEFENSE, SETTLEMENT AND REASONABLE ATTORNEY'S FEES) ("CLAIMS")** ***TO THE EXTENT CAUSED BY OR ARISING FROM CONTRACTOR'S OR ITS SUBCONTRACTORS' FAULT OR NEGLIGENT PERFORMANCE OF THE*** **SERVICES TO BE PROVIDED UNDER ANY AGREEMENT, WHICH MAY BE ASSERTED BY ANY THIRD PARTY, GOVERNMENTAL AGENCY OR ENTITY, CONTRACTOR, OR CONTRACTOR'S EMPLOYEES, AGENTS, CONTRACTORS, SUBCONTRACTORS OR THEIR EMPLOYEES OR AGENTS. THIS DUTY OF INDEMNIFICATION INCLUDES, BUT IS NOT LIMITED TO, CLAIMS RELATING TO OR ARISING OUT OF BREACH OF CONTRACT, DEATH, PERSONAL INJURY, PROPERTY DAMAGE OR LOSS (INCLUDING, WITHOUT LIMITATION, POLLUTION OR ENVIRONMENTAL DAMAGE), ANY THEORY OF STRICT LIABILITY, AND ANY CIVIL OR CRIMINAL FINES OR PENALTIES RELATING TO OR ARISING UNDER ANY CLAIM. WHERE A CLAIM IS THE RESULT OF THE JOINT OR CONCURRING NEGLIGENCE OF CONTRACTOR AND AN INDEMNIFIED PARTY, CONTRACTOR'S DUTY OF INDEMNIFICATION AS SET FORTH IN THIS ARTICLE XIV SHALL BE IN PROPORTION TO ITS ALLOCABLE SHARE OF SUCH JOINT OR CONCURRING NEGLIGENCE.**

XV. PATENTS AND LICENSES A. Contractor represents and warrants that the use or construction of any and all tools, equipment and processes furnished by Contractor and used in any Work does not and shall not infringe on any license or patent which has been issued or applied for; and, in addition to all other indemnifying provisions contained in this Contract, Contractor agrees to indemnify, defend and hold Company harmless from any and all claims, demands, and causes of action of every kind and character in favor of or made by any patentee, licensee or claimant of any right or priority to such tool, equipment or process, or the use or construction thereof, which may result from or arise out of furnishing or use of any such tool, equipment, or process by Contractor.

B. Contractor warrants that it has obtained, or will obtain, an assignment of any original work of authorship created by any of its employees or independent contractors during the performance by Contractor of its duties and obligations under ny Agreement. Contractor further warrants that it will disclose such original works of authorship to Company on a timely basis and vill timely assign such rights to Company.

C. Contractor warrants that it has obtained, or will obtain, from its employees and independent contractors an assignment of all rights in any new and useful process, machine, manufacture or composition of matter, and any new and useful improvement thereof made by any of them in the course of the performance of Contractor's duties and obligations under any Agreement. Contractor further warrants that it will promptly disclose any new and useful process, machine, manufacture or composition of matter and any new and useful improvement thereof made by any of its employees or independent contractors in the course of the performance of Contractor's duties and obligations under any Agreement and will assign such rights to Company on demand.

XVI. SURVIVAL As part of the consideration for this Contract, Contractor hereby agrees that its provisions concerning indemnity, warranty, waiver of subrogation and patent infringement shall extend to and be enforceable by and shall inure to the benefit of any owner, joint owner, co-venturer, operator or non-operator for which Company is acting and shall survive completion of any Work and the termination of this Contract.

XVII. SUBCONTRACTING A. No subcontract may be awarded by Contractor unless approved in advance by Company in writing. Contractor shall be and remain primarily liable for all obligations assumed by Contractor under this Contract. Contractor's subcontracting of any portion of the Work shall not release or relieve Contractor from any obligation or liability under any Agreement. Contractor shall furnish Company with a true and complete copy of each subcontract awarded by Contractor within five (5) days after such subcontract is executed. Contractor shall oversee and be responsible for the performance of its subcontractors and keep accurate books, records and accounts and furnish such reports and information as Company may request relative to subcontracts.

B. Contractor represents and warrants that, prior to entry on Company's premises: 1) each subcontractor shall be given a copy of this Contract and any related Agreement (provided, however, Contractor may strike out or delete provisions pertaining to its compensation), 2) each subcontractor shall be familiar with each Contract term and condition, and 3) each subcontractor shall agree, to the extent of its respective portions of the Work, to perform fully each Contract term and condition.

XVIII. DEFAULT If Contractor breaches any warranty contained in any Agreement, or if any of Contractor's representations contained in any Agreement shall be found to be false, or if Contractor fails to prosecute the Work, or fails to make the progress set forth in any Agreement, or fails to pay any indebtedness when due, or fails to perform any of the conditions of or obligations assumed under any Agreement, or becomes insolvent, or if any voluntary or involuntary proceedings are instituted by or against Contractor in bankruptcy or insolvency, or if a receiver, trustee or assignee is appointed for the benefit of creditors of Contractor ("Events of Default"), Company may, if it so elects and without prejudice to any other rights or remedies it may have in law or equity:

1) suspend Contractor's authorization to proceed with Work,
2) remove Contractor from Company's Approved Contractor List,
3) terminate this Contract or any Agreement,
4) suspend payment in whole or in part under any Agreement until the Event of Default has been remedied, and/or,
5) take the Work remaining to be completed wholly or partly out of the hands of Contractor or any other person in whose hands or possession the Work or any part of it may be, in which event Company may award such Work to another contractor. Contractor in such event, in the manner and to the extent directed by Company, and only to such extent, shall assign to Company all of the rights of Contractor under its work orders, purchase orders and subcontracts relating to the Work.

XIX. TERMINATION Either party may terminate this Contract by giving the other party thirty (30)-day prior written notice, but neither party shall, by the termination of this Contract, be relieved of its respective obligations and liabilities arising from or incidental to Work performed prior to termination. Except as expressly provided in this Contract, it may not be terminated during the performance of any Agreement.

XX. FORCE MAJEURE If either party is rendered unable, wholly or in part, by force majeure to carry out its obligations under any Agreement, then on such party giving notice and full particulars of such force majeure in writing to the other party as soon as practicable after the occurrence of the cause relied on, then the obligation of the party giving such notice, so far and only insofar as affected by such force majeure, shall be suspended during the continuance of any inability so caused, but for no longer period, and such cause shall be remedied with all reasonable dispatch. "Force majeure" means acts of God, strikes, lockouts or labor disputes involving a general stoppage of Work on the job, civil disturbance, military action, rules, regulations, orders or acts of governmental authority, or other similar causes beyond the control of Company or Contractor. The requirement that events of force majeure be remedied with all reasonable dispatch shall not require the settlement of labor matters when such course is inadvisable in the judgment of the party having the difficulty.

XXI. ENTIRE AGREEMENT This Contract and any Agreement represent the entire agreement of the parties. No provision of any delivery ticket, invoice or other instrument used by Contractor in describing any Work shall supersede the provisions of any Agreement. The terms of this Contract shall prevail over conflicting terms of any Agreement or Work order, oral or written.

XXII. TIME OF THE ESSENCE Time is expressly declared to be of the essence of all Agreements.

XXIII. NON-WAIVER No election by Company under this Contract shall constitute a waiver of any other rights or remedies available to it at law or in equity. Neither waiver by Company nor any amendment of any of the terms, provisions, or conditions of any Agreement shall be effective unless in writing and signed by an authorized representative of Company.

XXIV. NOTICES All notices to be given with respect to this Contract and any Agreement shall be given to Company and to Contractor, respectively, at the address first above written and shall be in writing, postage or delivery charges prepaid. All notices shall be effective upon actual receipt or refusal of delivery by the party to whom given. All sums due to Contractor under any Agreement shall be payable at ***Contractor's principal place of business, Garner Environmental Services, Inc., 1717 West 13th Street, Deer Park, Harris County, Texas 77536.***

XXV. ASSIGNMENT This Contract shall inure to the benefit of the parties, their successors and assigns. No Agreement or any payment accruing under it is assignable by Contractor, nor may it be pledged by Contractor as security without the prior written consent of Company.

XXVI. GOVERNING LAW This Contract and all Agreements are and shall be deemed to be made and delivered in Harris County, Texas, and shall be governed by and construed in accordance with the law of the State of Texas, without regard for its principles of conflicts of laws. Any legal action arising under this Contract shall be brought in the courts of the State of Texas or of the United States for the Southern District of Texas, Houston Division, to which venue and non-exclusive jurisdiction each party expressly consents for itself and in respect of its property for all purposes.

XXVII. DISPUTES If Company and Contractor have a dispute under any Agreement, they both undertake to explore, in good faith, resolution of the dispute through negotiation, mediation or similar alternative dispute resolution techniques prior to filing litigation. If any litigation or other formal proceeding must be filed by either party to preserve its rights under a statute of limitations or other legal deadline during the pendency of any alternative dispute resolution technique, the party filing such action will not require the other party to answer (if such delay is permitted by applicable rules) and will do all that is otherwise necessary to stay the action until the pending alternative resolution technique is terminated. If either party believes the dispute is not suitable for such alternative dispute resolution techniques, or if such techniques do not produce results satisfactory to the parties, either party may proceed with litigation. If the parties are unable to resolve any dispute by the alternative dispute resolution techniques described above and either party proceeds with litigation, the losing party shall pay the prevailing party's reasonable attorneys' fees, costs and necessary disbursements in addition to any relief that a court may grant.

XXVIII. AUTHORIZED REPRESENTATIVE Contractor represents and warrants that the person executing this Contract and any Agreement on behalf of Contractor is a duly authorized representative of Contractor and is vested with full authority to bind Contractor.

XXIX. CONFIDENTIAL INFORMATION A. All information concerning the business, customers, products, processes and trade secret information of Company ("Confidential Information") which may come into the possession of Contractor during the course of the negotiation or performance of this Contract or any Agreement is confidential to Company, shall be used by Contractor for the sole purpose of providing services to Company under this Contract and shall not be disclosed by Contractor to any third party without the prior written consent of Company. All Confidential Information shall become and remain the property of Company and shall be deemed to have been entrusted to Contractor only for the limited purposes of this Contract, and Contractor will not, without the prior written consent of Company use, reproduce or copy, or permit the use, reproduction or copying of any Confidential Information; provided, however, Contractor may make adequate reproductions and copies for the purpose of carrying out the Work. All Confidential Information received or created by Contractor and any reproductions or copies thereof made by Contractor shall be delivered to Company at any time prior to termination of this Contract at the request of Company and shall be delivered to Company immediately upon termination of this Contract. Nothing contained in this Contract or in any disclosures made by Company under it shall be construed to grant to Contractor any license or other rights of Company in or to Confidential Information or under any copyright or patent which has been or may in the future be issued with respect to Confidential Information.

B. Contractor will not be bound by the provisions of this Article XXIX with respect to information which:

(1) was available to the public prior to receipt of such information by Contractor pursuant to any Agreement; or

(2) becomes available to the public subsequent to receipt of such information by Contractor pursuant to any Agreement and through no fault of Contractor; or

(3) was already in Contractor's possession and not acquired, either directly or indirectly, from Company under an obligation of confidentiality; or

(4) subsequently is obtained from a third party who is lawfully in possession of such information and who is not under a contractual or fiduciary obligation to Company or another person with respect to such information.

XXX. TENSE, GENDER AND NUMBER Unless expressly provided otherwise, the use in this Contract of the past, present or future tense shall include the others, the masculine, feminine or neuter gender shall include the others, and the singular or plural number shall include the other.

XXXI HEADINGS The titles to the articles of this Contract are for the convenience of the parties, only; they are not a part of the Contract and shall have no effect in the construction or interpretation of it.

XXXII EXHIBITS The Exhibits checked below and attached to this Contract are incorporated in and made a part of it for all urposes:

_x_	Exhibit I	Scope of Work
_x_	Exhibit II	Price & Invoicing
_x_	Exhibit III	Drug, Alcohol & Illegal Items Policy
_x_	Exhibit IV	Insurance
___	Exhibit V	Schedule
___	Exhibit VI	Drawings & Attachments
___	Exhibit VII	General Requirements
___	Exhibit VIII	Consultant Terms & Conditions
___	Exhibit IX	_____

In the event of any conflict between the foregoing terms of this Contract and the Exhibits, the foregoing terms shall prevail.

ENTERPRISE PRODUCTS OPERATING L.P.
By Enterprise Products OLPGP, INC., its general partner

By: _____

Title: _____

GARNER ENVIRONMENTAL SERVICES, INC.
CONTRACTOR

By: Otis Chambers

Title: EXECUTIVE VICE PRESIDENT

SERVICE AGREEMENT.DOC

EXHIBIT I

SCOPE OF WORK

Contractor's Work will be:

EMERGENCY RESPONSE AND RELATED SERVICES TO BE PERFORMED ON AS NEEDED, AS AVAILABLE BASIS SUBJECT TO CIRCUMSTANCES THEN EXISTING.

EXHIBIT II

PRICE AND INVOICING

IN ACCORDANCE WITH CONTRACTOR'S CURRENT RATE SHEET.

EXHIBIT III

ENTERPRISE PRODUCTS OPERATING L.P.

POLICY

ILLEGAL AND UNAUTHORIZED ITEMS AT
OPERATIONAL FACILITIES AND IN OPERATIONAL VEHICLES

Enterprise is committed to providing a safe working environment for its employees, visitors, and contract personnel.

THE POSSESSION, USE, SALE, TRANSFER, RECEIPT OR PRESENCE AND BEING UNDER THE INFLUENCE OF DANGEROUS DRUGS OR CONTROLLED SUBSTANCES (EXCEPT AS LAWFULLY PRESCRIBED FOR THE PERSON IN POSSESSION AND DISCLOSED BY A PHYSICIAN'S ADVISORY FORM), DRUG PARAPHERNALIA OR ALCOHOLIC BEVERAGES ARE FORBIDDEN AT, UPON OR WITHIN ENTERPRISE OPERATIONAL FACILITIES AND OPERATIONAL VEHICLES.

Operational facilities include the entire premises of all terminals, processing plants, loading racks, pipelines, storage, warehouses, garages, shops, construction locations and field worksites. Operational vehicles include all vehicles (tractors, trailers, transports and pickups) bearing an external company name, logo, trade name, trademark or placard. Dangerous drugs include all drugs and devices which are prohibited by Federal or State law from being dispensed without a prescription. Controlled substances include cocaine, marijuana, narcotics and all other drugs and materials which are controlled under Federal or State law. Drug paraphernalia includes roach clips, gram scales and any other property or material which Enterprise deems is intended or has been adapted or modified for drug use. Alcoholic beverages include liquor, beer and wine, except liquor, beer and wine stored in passenger vehicles. "Under the influence" means having detectable levels of dangerous drugs, controlled substances or alcohol in the blood or urine.

Employees will not be permitted to work while under the influence of drugs or alcohol. Individuals who appear to be unfit for duty will be released from duty and may be subject to a physical examination at a designated medical facility. Refusal to comply with a fitness-for-duty examination may result in disciplinary action up to and including DISCHARGE.

Any employee who uses or is found to be in possession or under the influence of these illegal or unauthorized items at, upon or within these Enterprise facilities or vehicles will be relieved from duty immediately and subject to disciplinary action up to and including DISCHARGE. Others who use or are found to be in possession or under the influence of such items at, upon or within these Enterprise facilities or vehicles will be removed from Enterprise's vehicles and facilities and denied future admission to Enterprise property.

Enterprise reserves the right to search, inspect and submit to laboratory testing persons and property found at, upon or within Enterprise facilities or vehicles. Entry onto operational facilities or vehicles constitutes consent to searches or inspections. Any employee who refuses to submit his person or property to search, inspection or testing or who refuses to consent to the release of medical information in connection with a company physical examination or relevant to any accident, injury or incident involving the employee and relating to the safety, health or welfare of the employee, other employees or the public will be relieved from duty immediately and subject to disciplinary action up to and including DISCHARGE; others at, upon or within Enterprise facilities or vehicles who refuse to submit their persons or property to search, inspection or testing will be removed from and denied future admission to Enterprise property.

Off-the-job illegal drug use which could adversely affect an employee's job performance or which could jeopardize the safety of other employees, the public, or company facilities, or where such usage adversely affects the public trust in the ability of the company to carry out its responsibilities, is also cause for disciplinary action, up to and including DISCHARGE. Employees who are arrested for off-the-job drug activity may be considered in violation of this policy. In deciding what action to take, the company will take into consideration the nature of the charges, the employee's present assignment and record with the company, and the impact of the employee's arrest upon the conduct of the company's business.

Employees who wish to report drug or alcohol use in violation of this policy should contact the appropriate Vice President in charge of their group or the Vice President -- Human Resources, directly. The company will make every effort to protect anonymity, and such information will be treated in confidence.

Enterprise requires that all prescriptions and over-the-counter medicines at Enterprise operational facilities and in Enterprise operational vehicles be in original containers, with prescriptions showing the name and doctor of the person in possession. Any employee of an operational facility or driver of an operational vehicle who is taking a prescription drug must furnish his supervisor, before reporting to duty, with a Physician's Advisory form identifying the drug and certifying that, taken as directed, it will not impair the employee's physical qualifications to perform his duties and must carry with him while on duty a copy of the Physician's Advisory form acknowledged by his supervisor.

EXHIBIT IV
INSURANCE

Certificate Holder Definition

"Certificate Holder" shall mean Enterprise Products Partners L.P., Enterprise Products Operating L.P., Enterprise Products GP, LLC, Enterprise Products OLPGP, Inc., Enterprise Products Company, Belvieu Environmental Fuels[7], Sabine Propylene Pipeline, L.P., Baton Rouge Pipeline, LLC., Belle Rose NGL Pipeline, LLC., Chunchula Pipeline Company, LLC, Propylene Pipeline Partnership, L.P., Cajun Pipeline Company, LLC, HSC Pipeline Partnership, L.P., Sorrento Pipeline Company, LLC, Enterprise Products Texas Operating L.P., EPIK Gas Liquids LLC, EPIK Terminaling L.P., Baton Rouge Fractionators LLC, Baton Rouge Propylene Concentrator, LLC, Enterprise Gas Processing LLC, Enterprise NGL Pipelines LLC, Enterprise NGL Private Lines & Storage LLC, Enterprise Fractionation LLC, Enterprise Norco LLC, Enterprise LOU-TEX Propylene Pipeline L.P., Enterprise LOU-TEX NGL Pipeline L.P., Grand Isle Pipeline LLC., Mid-America Pipeline Company LLC, Seminole Pipeline Company, Wilprise Pipeline Company LLC, each of their parent, subsidiary and affiliated companies, partners and joint venturers, and each owner or joint owner of any equipment or facility operated by Enterprise Products Operating L.P.

2. Form of Additional Insured Endorsement

It is agreed that such insurance as is afforded by the policy shall apply to Enterprise Products Partners L.P., Enterprise Products Operating L.P., Enterprise Products GP, LLC, Enterprise Products OLPGP, Inc., Enterprise Products Company, Belvieu Environmental Fuels[7], Sabine Propylene Pipeline, L.P., Baton Rouge Pipeline, LLC., Belle Rose NGL Pipeline, LLC., Chunchula Pipeline Company, LLC, Propylene Pipeline Partnership, L.P., Cajun Pipeline Company, LLC, HSC Pipeline Partnership, L.P., Sorrento Pipeline Company, LLC, Enterprise Products Texas Operating L.P.,EPIK Gas Liquids LLC, EPIK Terminaling L.P., Baton Rouge Fractionators LLC, Baton Rouge Propylene Concentrator, LLC, Enterprise Gas Processing LLC, Enterprise NGL Pipelines LLC, Enterprise NGL Private Lines & Storage LLC, Enterprise Fractionation LLC, Enterprise Norco LLC, Enterprise LOU-TEX Propylene Pipeline L.P., Enterprise LOU-TEX NGL Pipeline L.P., Grand Isle Pipeline LLC., Mid-America Pipeline Company LLC, Seminole Pipeline Company, Wilprise Pipeline Company LLC, each of their parent, subsidiary and affiliated companies, partners and joint venturers, and each owner or joint owner of any facility operated by one or more of them, as their interests may appear, to whom the named insured is obligated by contract to provide such insurance, but only to the extent of coverage required by such contracts as respects operations performed in connection with the insured and only if such contract was agreed to in writing or orally by the named insured or his/its representatives prior to the occurrence of any loss under such contract.

3. Form of Certificate Holder Notation

Enterprise Products Partners L.P., Enterprise Products Operating L.P., Enterprise Products GP, LLC, Enterprise Products OLPGP, Inc., Enterprise Products Company, Belvieu Environmental Fuels[7], Sabine Propylene Pipeline, L.P., Baton Rouge Pipeline, LLC., Belle Rose NGL Pipeline, LLC., Chunchula Pipeline Company, LLC, Propylene Pipeline Partnership, L.P., Cajun Pipeline Company, LLC, HSC Pipeline Partnership, L.P., Sorrento Pipeline Company, LLC, Enterprise Products Texas Operating L.P.,EPIK Gas Liquids LLC, EPIK Terminaling L.P., Baton Rouge Fractionators LLC, Baton Rouge Propylene Concentrator, LLC, Enterprise Gas Processing LLC, Enterprise NGL Pipelines LLC, Enterprise NGL Private Lines & Storage LLC, Enterprise Fractionation LLC, Enterprise Norco LLC, Enterprise LOU-TEX Propylene Pipeline L.P., Enterprise LOU-TEX NGL Pipeline L.P., Grand Isle Pipeline LLC., Mid-America Pipeline Company LLC, Seminole Pipeline Company, Wilprise Pipeline Company LLC, each of their parent, subsidiary and affiliated companies, partners and joint venturers, and each owner or joint owner of any facility operated by one or more of them, as their interests may appear, arising from the work to be performed under oral or written contract.

P. O. Box 573
Mont Belvieu, Texas 77580
Attention: Purchasing

4. Additional Terms for Work to be Performed in Louisiana

In all cases where Contractor's employees (defined to include Contractor's direct, borrowed, special or statutory employees) are covered by the Louisiana Worker's Compensation Act, La. R.S. 23:1021 et seq., Company and Contractor agree that all Work and operations performed by Contractor and its employees pursuant to the Contract are an integral part of and are essential to the ability of Company to generate Company's goods, products and services for purposes of La. R.S. 23:1061(A)(1). Furthermore, Company and Contractor agree that Company is the principal or statutory employer of Contractor's employees for purposes of La. R.S. 23:1061(A)(3). This provision is included for the sole purpose of establishing a statutory employer relationship to gain the benefits expressed in La.R.S. 23:1031 and La.R.S. 23:1061(a), and it is not intended to create an employer-employee relationship for any other purpose. Irrespective of Company's status as the statutory employer or special employer (as defined in La. R.S. 23:1031(c)) of Contractor's employees, Contractor shall remain primarily responsible for the payment of Louisiana Worker's Compensation benefits to its employees, and shall not be entitled to seek contribution for any such payments from Company.

This Section 4 applies to the extent, and only to the extent, that the laws of the State of Louisiana are applicable to any Work conducted under the terms and provisions of the Contract. In further consideration of the amounts or other consideration to be received by Contractor pursuant to the Contract, Company and Contractor agree that Contractor shall be responsible for the payment of all compensation benefits paid by Contractor and/or Contractor's underwriters. Contractor stipulates and agrees that Company shall be named as an alternate employer under any and all worker's compensation insurance coverage maintained by Contractor. Contractor acknowledges that the price or other consideration for said performance, service, work, or operations includes an amount necessary for Contractor to pay for such insurance coverage and stipulates and agrees that any such insurer (or the Contractor, if self-insured) shall agree to waive any and all rights of subrogation, contribution or indemnity against Company thereunder.

EXHIBIT VIII

CONSULTANT TERMS & CONDITIONS

A. Reports

If any data, measurements, assessments, test results or analyses related to Company's facilities, operations, actual or proposed activities ("Data") or any interpretations thereof or recommendations based thereupon are to be contained in any letter, compilation, report or other document ("Report") prepared by Contractor for Company hereunder, Contractor shall submit the Report to Company in draft form for review and approval by Company before any Report in final form is prepared and issued by Contractor; and no Report shall be issued by Contractor in final form without such prior approval. Upon the completion of a Report in final form or upon a determination in Company's sole discretion that no Report shall be issued by Contractor with respect to any matter, Contractor shall destroy all drafts and preliminary versions of such Report. Company and Contractor hereby expressly agree and acknowledge that Contractor's services hereunder specifically exclude the provision of legal advice to Company, and Contractor shall refrain from expressing in any Report conclusions or opinions concerning Company's compliance with or violation of any statute, regulation, ordinance, rule or order of any federal, state or local governmental authority. Contractor shall employ no intemperate, exaggerated, speculative or inflammatory language in any Report and shall make only reasonable, accurate and truthful statements of fact, opinion and professional judgement.

B. Confidentiality

1. Contractor shall take all reasonable steps to safeguard Confidential Information against unauthorized disclosure and assure that the confidentiality provisions of this Contract are not violated.

2. If Contractor wishes to use third-party services requiring disclosure of Confidential Information to that third party, Recipient will notify Company, requesting that an appropriate confidentiality agreement be executed by Company with such third party. Company will advise Contractor in writing when it has concluded such a confidentiality agreement and authorize disclosure of Confidential Information by Contractor to such third party; provided, however, Company shall be under no obligation to enter into a confidentiality agreement with any third party referred to it by Contractor.

EPCO
HOLDINGS,
INC.

WORK CONTRACT NO. **#4864**
ORIGINATOR: **CAREN GOZZI**
(Type/Print Department and Location)

EPCO HOLDINGS, INC.
SERVICE AGREEMENT (Rev. 07/06)

THIS CONTRACT is entered into this **6th** day of **FEBRUARY, 2007** in the City of Houston, Harris County, Texas, between EPCO Holdings, Inc., a Delaware Corporation, and its Affiliates, P. O. Box 4735, Houston, Texas 77210-4735 ("Company"), and:

ANDERSON POLLUTION CONTROL, INC.
(Full Legal Name)

A TEXAS CORPORATION
(State) (Corporation, Partnership or Sole Proprietorship)

1011 WEST LEWIS, SUITE A
(Address)

CONROE, TX 77301 ("Contractor").
(City) (State) (Zip)

IN CONSIDERATION of the mutual promises in this Contract and other good and valuable consideration, the parties agree as follows:

I. APPROVED CONTRACTOR LIST Upon execution of this Contract by Contractor and Company, Contractor shall be included on Company's Approved Contractor List, indicating Contractor's eligibility to perform Work for Company; and Company and Contractor agree that this Contract shall remain in force until terminated as provided by its terms.

II. DEFINITIONS "Contract" and "Agreement" mean this Contract and any subsequent oral or written Work order or agreement (together with any drawings, specifications or other exhibits attached to it) between the parties for Work. "Work" means all labor, goods, materials and services required to be performed and furnished by Contractor under any Agreement. "Affiliate" means with respect to any relevant entity, any other entity that directly or indirectly Controls, is Controlled by, or is under common Control with, such relevant entity in question. "Control" means with respect to an entity, the ability or power, directly or indirectly, through one or more intermediaries, to direct or cause the direction of the management of such entity, whether through ownership of voting securities, by contract or otherwise.

III. PERFORMANCE Contractor represents and warrants that all Work shall be in strict accordance with and subject to all Contract terms and conditions, that it has adequate equipment in good working order and fully trained personnel capable of efficiently operating such equipment or performing any services provided under any Agreement, and that all Work shall be performed in a good and workmanlike manner, satisfactory and acceptable to Company.

IV. INDEPENDENT CONTRACTOR Contractor is and shall be an independent contractor with respect to Work, and neither Contractor nor its employees or subcontractors or their employees shall be deemed, for any purpose, to be the employee, agent, servant, or representative of Company in the performance of Work. Company shall have no direction or control of the Contractor or its employees and agents except in the results to be obtained. Work shall conform with all applicable specifications and meet the approval of Company and shall be subject to the general right of inspection by or for Company. The actual performance and superintendence of Work shall be by Contractor, but Company or its representative shall have unlimited access to Contractor's operations to determine whether Work is being performed by Contractor in accordance with the Contract.

V. EMPLOYMENT CONTRIBUTIONS AND BENEFITS Contractor agrees to accept full and exclusive liability for the payment of and to pay when due any and all premiums, contributions and taxes for Workers= Compensation Insurance and Unemployment Insurance and for old age pensions, annuities and other retirement benefits imposed by or pursuant to Federal or State law and measured by the wages, salaries or other remuneration paid to persons employed by Contractor; and Contractor further agrees to indemnify and hold Company harmless against any liability for any such premiums, taxes or contributions which may be assessed against Company with respect to Contractor, its employees or subContractors.

VI. TAXES AND FEES Contractor agrees to accept full and exclusive liability for the payment of and to pay when due all taxes, licenses and fees levied or assessed by any governmental agency on Contractor in connection with or incident to the performance of any Agreement. Contractor agrees to require the same covenant of and be liable for any breach of it by its subcontractors. Contractor agrees to reimburse Company on demand for all such local, state or federal taxes or governmental charges which Company may be required or deem it necessary to pay on account of employees of Contractor or its subcontractors, or Company may deduct such payments from any sums which may be or become due to Contractor from Company; Contractor agrees to furnish Company with timely, sufficient and accurate information to make such reports and to pay such taxes and governmental charges if requested by Company.

VII. LABOR AND MATERIAL Contractor shall pay all claims for labor and material related to the Work and shall not permit any liens of any kind to be fixed against the property of Company or the property of others arising out of claims of Contractor, its employees, mechanics, materialmen, or subContractors; and upon the completion of the Work, Contractor shall furnish Company with evidence satisfactory to Company of the payment of all such claims. Contractor shall indemnify and hold harmless Company from and

against all such claims or liens; and Contractor agrees, that, without waiver of any other rights or remedies available to Company, any sums due to Contractor from Company may be withheld and applied by Company toward the discharge or payment of any such claims or liens.

VIII. PAYMENT FOR WORK Payment for Work shall be as provided in Exhibit II or as provided in any Agreement. Payment for Work performed on a reimbursable-cost basis shall be made by Company to Contractor in accordance with Contractor's then-current rate schedule; Contractor shall furnish Company its rate schedule prior to commencing any such Work and notify Company in writing of any changes in the rate schedule. Neither payment for nor use of Work in whole or in part by Company shall constitute acceptance of any Work or materials which do not conform to Contract terms and specifications or settlement of any unsettled claims, liabilities, duties, liens or other encumbrances. Contractor shall keep accurate books and records of all Work, and, within two (2) years from the completion of Work under a particular Agreement or the termination of this Contract, whichever is earlier, Company or its representative shall have the right to inspect, copy and audit, during Contractor's normal business hours, its books and records of every description for the purpose of determining the accuracy of any charges, claims or demands relating to Work.

IX. COMPLIANCE In the performance of all Work, Contractor warrants and represents that it and its subContractors shall comply with all applicable statutes, ordinances, rules and regulations, including but not limited to those administered by the U.S. Occupational Safety and Health Administration, the U.S. Environmental Protection Agency, the U.S. Department of Transportation ("DOT") and state agencies exercising concurrent or similar jurisdiction; and Contractor shall indemnify and hold harmless Company from any and all claims or demands of a penal nature or civil penalties which may arise from violation of such statutes, ordinances, rules and regulations by Contractor or any subcontractor employed by it.

X. COMPANY PREMISES Contractor shall conform and shall require its employees, agents and subContractors to conform, while at or near the location of the Work or on Company's premises, to all requirements of Company, including, but not limited to, Company's rules of conduct, safety rules, Contractor safety policies, routes of ingress and egress and other requirements for the protection of persons or property. Contractor shall provide and take all safety precautions which the nature of the Work may require or indicate and keep the Work location free from accumulations of waste and rubbish. Upon completion of all Work, Contractor shall clean up and dispose all waste and rubbish generated by it or its subcontractors, collect unused material belonging to it or its subcontractors, and restore the location to as clean and orderly a condition as existed prior to commencement of the Work.

XI. ACCIDENT REPORTS Contractor shall report to Company in writing, as soon as practicable, all accidents or occurrences resulting in bodily injury, including death, or damage to or destruction of property arising out of or during the course of performance of any Agreement and, upon request, shall furnish Company with copies of all reports made by Contractor to Contractor's insurer or to others of such accidents and occurrences.

XII. DRUG-FREE WORKPLACE A. Contractor and each of its subcontractos performing Work at any Operational Facility shall establish and enforce within its organization an anti-drug program to assure a drug-free workplace. Contractor's anti-drug program shall include provisions for the auditing by Contractor of its subcontractors' anti-drug programs. "Operational Facility" means the entire premises of each Company processing plant, terminal, loading rack, pipeline, storage facility, warehouse, garage, shop, construction location and field worksite.

B. Contractor represents and warrants that it and its subcontractors shall assign and allow to Work at Operational Facilities only employees who have current negative drug screen results under their employer's anti-drug program. A current result is one based on the most recent drug screen performed within 12 months of a day on which Work is to be performed.

C. Before performing Work at any Operational Facility, Contractor shall furnish and cause each of its subcontractors to furnish Company with documentation of their respective anti-drug programs demonstrating that each program meets or exceeds the requirements of Company's Drug, Alcohol and Illegal Items Policy attached hereto as Exhibit III and meets or exceeds the requirements of any applicable law or regulation. Complete records of the anti-drug program shall be kept at Contractor's and each subcontractor's home office, respectively, and be available for audit by Company during regular office hours. Failure or refusal by Contractor or a subcontractor to establish and maintain a satisfactory anti-drug program, keep adequate records of it, or permit Company to audit compliance with it shall be grounds for immediate suspension of Contractor's and its subcontractors authorization to proceed with Work or termination of this Contract.

D. Before performing Work at any Operational Facility, Contractor and each subcontractor shall certify to Company in a writing signed by an authorized representative of the employer that each employee (identified by name, employee I.D. number and date of drug screen result) who will perform Work at the Operational Facility has a current negative drug screen result under the employer's anti-drug program. Such certification shall be kept current throughout the duration of the Work, and notice of any change in an employee's certified status shall be given by the employer to Company in writing immediately. Company may exclude from Operational Facilities any Contractor or subcontractor employee who does not have a current certification, and any delay in the performance of Work due to lack of properly certified employees will be for the account of Contractor.

E. On any pipeline or other DOT-regulated work, Contractor and its subcontractors shall also furnish Company with written certification of current random pool list and each employee's most recent negative drug screen results under DOT regulations.

XIII. INSURANCE A. Contractor, at its own expense, shall provide and maintain in force with insurance companies acceptable to Company the kinds of insurance and minimum amounts of coverage set forth in paragraph B, below, to cover all loss and liability for damages on account of bodily injury, including death, and damage to or destruction of property caused by or arising from

any and all activities carried on or any and all Work performed under any Agreement. Contractor shall cause its insurer to name Certificate Holder as an additional insured on its Auto, General and Excess Liability insurance policies and grant Certificate Holder a waiver of subrogation on its Workers= Compensation insurance policy. "Certificate Holder" shall have the meaning provided in the Certificate Holder Definition in Exhibit IV. If Contractor fails or refuses to carry out any of the provisions of this Article XIII, Company shall, in addition to any right to recover damages or obtain other relief, have the right to suspend Contractor's authorization to proceed with Work or terminate this Contract.

B. 1) WORKERS= COMPENSATION (Including Occupational Disease) and EMPLOYER'S LIABILITY INSURANCE. Contractor's Workers= Compensation and Employer's Liability coverages shall apply to all employees, including borrowed servants, in accordance with the benefits afforded by the statutory Worker's Compensation Acts, USL & H and Maritime Acts applicable to the State, Territory or District of hire, supervision or place of accident. A waiver of subrogation to Certificate Holder is required. Policy limits shall not be less than:

Worker's Compensation: Statutory Limits.
Employer's Liability: $500,000, each accident; $500,000 Disease, policy limit; $500,000 Disease, each employee.

2) COMMERCIAL GENERAL LIABILITY INSURANCE, as primary policy over all others, covering premises, operations, products and completed operations, independent Contractors, and blanket contractual liability. The policy shall cover all liabilities arising out of explosion, collapse and underground ("XCU") hazards. The policy shall provide broad-form property damage, including completed operations, coverage. An "additional insured" endorsement naming Certificate Holder is required. Policy limits shall not be less than:

Bodily Injury: $500,000 per occurrence, $1 million aggregate.
Property Damage: $500,000 per occurrence, $1 million aggregate.
OR Combined Single Limit (CSL) of $1 million per occurrence, $2 million aggregate.

3) COMPREHENSIVE-AUTOMOBILE LIABILITY INSURANCE, as primary policy over all others, covering all owned, hired and non-owned automotive equipment. An "additional insured" endorsement naming Certificate Holder is required. Policy limits shall not be less than:

Bodily Injury: $500,000 per person, $500,000 per occurrence/accident.
Property Damage: $500,000 per occurrence.
OR Combined Single Limit of $1 million per occurrence.

4) EXCESS/UMBRELLA LIABILITY INSURANCE, to be primary excess over all others:

☒ $5 million

5) Additional insurance and surety limits:

a) ☒ NONE REQUIRED.

b) ☐ ALL-RISK BUILDER'S RISK POLICY with limits of $_____, Minimum Deductible $_____.

c) ☐ CONTRACTOR'S EQUIPMENT FLOATER POLICY

d) ☐ OWNER/CONTRACTOR'S PROTECTIVE LIABILITY POLICY with minimum limits of $500,000 CSL.

e) ☐ CRANE COVERAGE -- LIFTER'S LIABILITY POLICY with limits of $500,000 CSL.

f) ☐ PROFESSIONAL LIABILITY INSURANCE covering acts, errors, omissions, malpractice, as applicable, potentially arising from or pertaining to any Work to be performed by Contractor, its employees, agents or subcontractors; policy limits shall not be less than $1 million per occurrence/claim; OR in lieu of such insurance, Contractor may furnish an irrevocable letter of credit in form and amount and with an issuer satisfactory to Company.

g) ☐ PERFORMANCE AND MAINTENANCE BOND. Upon execution of this Contract and prior to commencing performance hereunder, Contractor shall execute, with a surety Company satisfactory to Company, a Surety Bond to guarantee completion of the Work within the time provided, the payment of all claims and the fulfillment of all obligations arising, either directly or indirectly, under any Agreement, including but not limited to the defense of all litigation incidental to any Agreement to which Certificate Holder is made a party. The surety limits shall be not less than one hundred percent (100%) of the total estimated contract price or as agreed to by Company. In lieu of such surety bond, Contractor may cause to be issued an irrevocable letter of credit payable to the order of Company in such amount, in a form and with an issuer acceptable to Company; or, if acceptable to Company, Contractor may use a combination of surety bond, letter of credit, or corporate or personal guaranty.

C. Contractor's insurance policies shall be endorsed as follows and in accordance with state law:

Worker's Compensation policy:

1) Blanket waiver of subrogation, OR 2) "The Insurers hereby waive their rights of subrogation against Certificate Holder and any individual, firm, or corporation, their subsidiaries, factors or assigns for whom or with whom the Assured may be working."

Primary General, Auto and Excess Liability Policies:

1) Blanket additional insured endorsement, OR 2) the Form of Additional Insured Endorsement in Exhibit IV.

D. Contractor represents and warrants that at all times during the term of this Contract it shall have furnished or caused to be furnished to Company an original, current certificate of insurance on forms acceptable to Company (most recent ACORD form) reflecting:

1) The kinds and amounts of insurance required above.
2) The insurance Company or companies carrying the required coverages.
3) The policy number and the effective and expiration dates of each policy.
4) That Certificate Holder will be given thirty (30)-day prior written notice of any material change in or termination of any policy.
5) That a waiver of subrogation under Contractor's Worker's Compensation policy has been issued to Certificate Holder.
6) That Certificate Holder has been named as an "Additional Insured" on Contractor's primary Auto & General Liability policies and Excess/Umbrella policies.
7) A Certificate Holder notation reading as shown in the Form of Certificate Holder Notation in Exhibit IV.

E. All policies shall provide that the insurance Company will notify Certificate Holder not less than thirty (30) days prior to the termination of any policy and before any changes are made which restrict or reduce the coverage provided or change the name of the insured.

F. Contractor shall require each of its subcontractors to provide the foregoing coverages as well as any other coverages that Contractor may consider necessary, all to be endorsed with the above-specified waiver of subrogation and additional insured wording; and any deficiency in the coverages, policy limits or endorsements of said subcontractors will be the sole responsibility of Contractor.

G. It is understood and agreed by Contractor and Company that the coverages granted to the Certificate Holder "additional insured" in Contractor's policies of insurance as required in this Contract are to apply on a primary basis over all other valid and collectible insurance owned by and or available to the "additional insured." It is further understood and agreed by Contractor and Company that such coverages provided by Contractor to the "additional insured" are applicable to liability associated with the operations, products, completed operations, premises, equipment and or vehicles contemplated by this Contract. Contractor shall be solely responsible for any deductible or self-insured retention associated with the coverages granted to the Aadditional insured.6

XIV. INDEMNITY **EXCEPT AS EXPRESSLY LIMITED IN THIS CONTRACT, CONTRACTOR SHALL INDEMNIFY, DEFEND AND HOLD HARMLESS COMPANY, ITS DIRECTORS, OFFICERS, AGENTS AND EMPLOYEES AND THEIR SUCCESSORS, HEIRS AND ASSIGNS ("INDEMNIFIED PARTIES") FROM AND AGAINST ANY AND ALL CLAIMS, LOSSES, DAMAGES, CAUSES OF ACTION, SUITS, AND LIABILITY OF EVERY KIND AND CHARACTER (INCLUDING, BUT NOT LIMITED TO, ALL COSTS OF DEFENSE, SETTLEMENT AND REASONABLE ATTORNEY'S FEES) ("CLAIMS") RELATING TO, ARISING OUT OF OR INCIDENTAL TO ANY AGREEMENT OR SERVICES TO BE PROVIDED UNDER ANY AGREEMENT (REGARDLESS OF WHETHER SUCH SERVICES ARE LISTED OR NOT LISTED ON EXHIBIT I) WHICH MAY BE ASSERTED BY ANY THIRD PARTY, GOVERNMENTAL AGENCY OR ENTITY, CONTRACTOR, OR CONTRACTOR'S EMPLOYEES, AGENTS, CONTRACTORS, SUBCONTRACTORS OR THEIR EMPLOYEES OR AGENTS. THIS DUTY OF INDEMNIFICATION INCLUDES, BUT IS NOT LIMITED TO, CLAIMS RELATING TO OR ARISING OUT OF BREACH OF CONTRACT, DEATH, PERSONAL INJURY, PROPERTY DAMAGE OR LOSS (INCLUDING, WITHOUT LIMITATION, POLLUTION OR ENVIRONMENTAL DAMAGE), ANY THEORY OF STRICT LIABILITY, AND ANY CIVIL OR CRIMINAL FINES OR PENALTIES RELATING TO OR ARISING UNDER ANY CLAIM. WHERE A CLAIM IS THE RESULT OF THE JOINT OR CONCURRING NEGLIGENCE OF CONTRACTOR AND AN INDEMNIFIED PARTY, CONTRACTOR'S DUTY OF INDEMNIFICATION AS SET FORTH IN THIS ARTICLE XIV SHALL BE IN PROPORTION TO ITS ALLOCABLE SHARE OF SUCH JOINT OR CONCURRING NEGLIGENCE.**

In no event shall Contractor or Company be liable to the other for any loss of income or anticipated profits or loss of use of equipment or facilities caused by or arising from the performance of Work under this Contract; provided, however, this limitation shall not apply to the extent that such damage is in any manner covered by and/or insured by a) Contractor's or

any subContractor's policies of insurance, bonds or letters of credit required to be provided, carried and maintained pursuant to this Agreement or otherwise or b) policies of insurance naming Company or Contractor as certificate holder, named insured or additional insured, ; and, provided, further, if Company pays or owes to any person or entity that is not an affiliate of Contractor any costs, expenses or damages (including, without limitation, indirect, special, consequential, incidental, exemplary, punitive actual, direct and other damages) in settlement or satisfaction of any Claim and such costs expenses or damages are covered by any Contractor indemnity to Company under this Agreement, then Company may recover such costs, expenses or damages from Contractor.

XV. PATENTS AND LICENSES A. Contractor represents and warrants that the use or construction of any and all tools, equipment and processes furnished by Contractor and used in any Work does not and shall not infringe on any license or patent which has been issued or applied for; and, in addition to all other indemnifying provisions contained in this Contract, Contractor agrees to indemnify, defend and hold Company harmless from any and all claims, demands, and causes of action of every kind and character in favor of or made by any patentee, licensee or claimant of any right or priority to such tool, equipment or process, or the use or construction thereof, which may result from or arise out of furnishing or use of any such tool, equipment, or process by Contractor.

B. Contractor warrants that it has obtained, or will obtain, an assignment of any original work of authorship created by any of its employees or independent Contractors during the performance by Contractor of its duties and obligations under any Agreement. Contractor further warrants that it will disclose such original works of authorship to Company on a timely basis and will timely assign such rights to Company.

C. Contractor warrants that it has obtained, or will obtain, from its employees and independent Contractors an assignment of all rights in any new and useful process, machine, manufacture or composition of matter, and any new and useful improvement thereof made by any of them in the course of the performance of Contractor's duties and obligations under any Agreement. Contractor further warrants that it will promptly disclose any new and useful process, machine, manufacture or composition of matter and any new and useful improvement thereof made by any of its employees or independent Contractors in the course of the performance of Contractor's duties and obligations under any Agreement and will assign such rights to Company on demand.

XVI. SURVIVAL As part of the consideration for this Contract, Contractor hereby agrees that its provisions concerning indemnity, warranty, waiver of subrogation and patent infringement shall extend to and be enforceable by and shall inure to the benefit of any owner, joint owner, co-venturer, operator or non-operator for which Company is acting and shall survive completion of any Work and the termination of this Contract.

XVII. SUBCONTRACTING A. No subcontract may be awarded by Contractor unless approved in advance by Company in writing. Contractor shall be and remain primarily liable for all obligations assumed by Contractor under this Contract. Contractor's subcontracting of any portion of the Work shall not release or relieve Contractor from any obligation or liability under any Agreement. Contractor shall furnish Company with a true and complete copy of each subcontract awarded by Contractor within five (5) days after such subcontract is executed. Contractor shall oversee and be responsible for the performance of its subcontractors and keep accurate books, records and accounts and furnish such reports and information as Company may request relative to subcontracts.

B. Contractor represents and warrants that, prior to entry on Company's premises: 1) each subcontractor shall be given a copy of this Contract and any related Agreement (provided, however, Contractor may strike out or delete provisions pertaining to its compensation), 2) each subcontractor shall be familiar with each Contract term and condition, and 3) each subcontractor shall agree, to the extent of its respective portions of the Work, to perform fully each Contract term and condition.

XVIII. DEFAULT If Contractor breaches any warranty contained in any Agreement, or if any of Contractor's representations contained in any Agreement shall be found to be false, or if Contractor fails to prosecute the Work, or fails to make the progress set forth in any Agreement, or fails to pay any indebtedness when due, or fails to perform any of the conditions of or obligations assumed under any Agreement, or becomes insolvent, or if any voluntary or involuntary proceedings are instituted by or against Contractor in bankruptcy or insolvency, or if a receiver, trustee or assignee is appointed for the benefit of creditors of Contractor ("Events of Default"), Company may, if it so elects and without prejudice to any other rights or remedies it may have in law or equity:

1) suspend Contractor's authorization to proceed with Work,
2) remove Contractor from Company's Approved Contractor List,
3) terminate this Contract or any Agreement,
4) suspend payment in whole or in part under any Agreement until the Event of Default has been remedied, and/or,
5) take the Work remaining to be completed wholly or partly out of the hands of Contractor or any other person in whose hands or possession the Work or any part of it may be, in which event Company may award such Work to another Contractor. Contractor in such event, in the manner and to the extent directed by Company, and only to such extent, shall assign to Company all of the rights of Contractor under its work orders, purchase orders and subcontracts relating to the Work.

XIX. TERMINATION Either party may terminate this Contract by giving the other party thirty (30)-day prior written notice, but neither party shall, by the termination of this Contract, be relieved of its respective obligations and liabilities arising from or incidental to Work performed prior to termination. Except as expressly provided in this Contract, it may not be terminated during the performance of any Agreement.

XX. FORCE MAJEURE If either party is rendered unable, wholly or in part, by force majeure to carry out its obligations under any Agreement, then on such party giving notice and full particulars of such force majeure in writing to the other party as soon as practicable after the occurrence of the cause relied on, then the obligation of the party giving such notice, so far and only insofar as affected by such force majeure, shall be suspended during the continuance of any inability so caused, but for no longer period, and such cause shall be remedied with all reasonable dispatch. "Force majeure" means acts of God, strikes, lockouts or labor disputes involving a general stoppage of Work on the job, civil disturbance, military action, rules, regulations, orders or acts of governmental authority, or other similar causes beyond the control of Company or Contractor. The requirement that events of force majeure be remedied with all reasonable dispatch shall not require the settlement of labor matters when such course is inadvisable in the judgment of the party having the difficulty.

XXI. ENTIRE AGREEMENT This Contract and any Agreement represent the entire agreement of the parties. No provision of any delivery ticket, invoice or other instrument used by Contractor in describing any Work shall supersede the provisions of any Agreement. The terms of this Contract shall prevail over conflicting terms of any Agreement or Work order, oral or written.

XXII. TIME OF THE ESSENCE Time is expressly declared to be of the essence of all Agreements.

XXIII. NON-WAIVER No election by Company under this Contract shall constitute a waiver of any other rights or remedies available to it at law or in equity. Neither waiver by Company nor any amendment of any of the terms, provisions, or conditions of any Agreement shall be effective unless in writing and signed by an authorized representative of Company.

XXIV. NOTICES All notices to be given with respect to this Contract and any Agreement shall be given to Company and to Contractor, respectively, at the address first above written and shall be in writing, postage or delivery charges prepaid. All notices shall be effective upon actual receipt or refusal of delivery by the party to whom given. All sums due to Contractor under any Agreement shall be payable at 1100 Louisiana, Houston, Harris County, Texas 77002.

XXV. ASSIGNMENT This Contract shall inure to the benefit of the parties, their successors and assigns. No Agreement or any payment accruing under it is assignable by Contractor, nor may it be pledged by Contractor as security without the prior written consent of Company. Company may assign this Contract without limitation.

XXVI. GOVERNING LAW This Contract and all Agreements are and shall be deemed to be made and delivered in Harris County, Texas, and shall be governed by and construed in accordance with the law of the State of Texas, without regard for its principles of conflicts of laws. Any legal action arising under this Contract shall be brought in the courts of the State of Texas or of the United States for the Southern District of Texas, Houston Division, to which venue and non-exclusive jurisdiction each party expressly consents for itself and in respect of its property for all purposes.

XXVII. DISPUTES If Company and Contractor have a dispute under any Agreement, they both undertake to explore, in good faith, resolution of the dispute through negotiation, mediation or similar alternative dispute resolution techniques prior to filing litigation. If any litigation or other formal proceeding must be filed by either party to preserve its rights under a statute of limitations or other legal deadline during the pendency of any alternative dispute resolution technique, the party filing such action will not require the other party to answer (if such delay is permitted by applicable rules) and will do all that is otherwise necessary to stay the action until the pending alternative resolution technique is terminated. If either party believes the dispute is not suitable for such alternative dispute resolution techniques, or if such techniques do not produce results satisfactory to the parties, either party may proceed with litigation. If the parties are unable to resolve any dispute by the alternative dispute resolution techniques described above and either party proceeds with litigation, the losing party shall pay the prevailing party's reasonable attorneys' fees, costs and necessary disbursements in addition to any relief that a court may grant.

XXVIII. AUTHORIZED REPRESENTATIVE Contractor represents and warrants that the person executing this Contract and any Agreement on behalf of Contractor is a duly authorized representative of Contractor and is vested with full authority to bind Contractor.

XXIX. CONFIDENTIAL INFORMATION A. All information concerning the business, customers, products, processes and trade secret information of Company ("Confidential Information") which may come into the possession of Contractor during the course of the negotiation or performance of this Contract or any Agreement is confidential to Company, shall be used by Contractor for the sole purpose of providing services to Company under this Contract and shall not be disclosed by Contractor to any third party without the prior written consent of Company. All Confidential Information shall become and remain the property of Company and shall be deemed to have been entrusted to Contractor only for the limited purposes of this Contract, and Contractor will not, without the prior written consent of Company use, reproduce or copy, or permit the use, reproduction or copying of any Confidential Information; provided, however, Contractor may make adequate reproductions and copies for the purpose of carrying out the Work. All Confidential Information received or created by Contractor and any reproductions or copies thereof made by Contractor shall be delivered to Company at any time prior to termination of this Contract at the request of Company and shall be delivered to Company immediately upon termination of this Contract. Nothing contained in this Contract or in any disclosures made by Company under it shall be construed to grant to Contractor any license or other rights of Company in or to Confidential Information or under any copyright or patent which has been or may in the future be issued with respect to Confidential Information.

B. Contractor will not be bound by the provisions of this Article XXIX with respect to information which:

(1) was available to the public prior to receipt of such information by Contractor pursuant to any Agreement; or

(2) becomes available to the public subsequent to receipt of such information by Contractor pursuant to any Agreement and through no fault of Contractor; or

(3) was already in Contractor's possession and not acquired, either directly or indirectly, from Company under an obligation of confidentiality; or

(4) subsequently is obtained from a third party who is lawfully in possession of such information and who is not under a contractual or fiduciary obligation to Company or another person with respect to such information.

XXX. TENSE, GENDER AND NUMBER. Unless expressly provided otherwise, the use in this Contract of the past, present or future tense shall include the others, the masculine, feminine or neuter gender shall include the others, and the singular or plural number shall include the other.

XXXI CONSTRUCTION. The titles to the articles of this Contract are for the convenience of the parties, only; they are not a part of the Contract and shall have no effect in the construction or interpretation of it. In the event of a dispute over the meaning or application of any Agreement, it shall be construed fairly and reasonably and neither more strongly for nor against either party.

XXXII EXHIBITS. The Exhibits checked below and attached to this Contract are incorporated in and made a part of it for all purposes:

_X_	Exhibit I	Scope of Work
_X_	Exhibit II	Price & Invoicing
_X_	Exhibit III	Drug, Alcohol & Illegal Items Policy
_X_	Exhibit IV	Insurance
___	Exhibit V	Schedule
___	Exhibit VI	Drawings & Attachments
___	Exhibit VII	General Requirements
___	Exhibit VIII	Consultant Terms & Conditions
___	Exhibit IX	Purchase Terms & Conditions

In the event of any conflict between the foregoing terms of this Contract and the Exhibits, the foregoing terms shall prevail.

EPCO HOLDINGS, INC.

By: _____

Title: Senior Vice President

ANDERSON POLLUTION CONTROL, INC.

By: Thomas Anderson

Title: Asst / Treasurer

EXHIBIT I

SCOPE OF WORK

Contractor's Work will be: **TO PERFORM ENVIRONMENTAL CLEANUP, EMERGENCY RESPONSE, REMEDIATION SERVICES, AND PIPELINE MAINTENANCE.**

EXHIBIT II

PRICE AND INVOICING

TO BE DETERMINED AT THE TIME THE ORDER IS PLACED.

EXHIBIT III

EPCO HOLDINGS, INC.
POLICY

ILLEGAL AND UNAUTHORIZED ITEMS AT OPERATIONAL FACILITIES AND IN OPERATIONAL VEHICLES

Company is committed to providing a safe working environment for its employees, visitors, and contract personnel. THE POSSESSION, USE, SALE, TRANSFER, RECEIPT OR PRESENCE AND BEING UNDER THE INFLUENCE OF DANGEROUS DRUGS OR CONTROLLED SUBSTANCES (EXCEPT AS LAWFULLY PRESCRIBED FOR THE PERSON IN POSSESSION), DRUG PARAPHERNALIA OR ALCOHOLIC BEVERAGES ARE FORBIDDEN AT, UPON OR WITHIN COMPANY OPERATIONAL FACILITIES AND OPERATIONAL VEHICLES.

Operational facilities include the entire premises of all terminals, processing plants, loading racks, pipelines, storage, warehouses, garages, shops, field worksites and retail locations. Operational vehicles include all vehicles (tractors, trailers, transports and pickups) bearing an external company name, logo, trade name, trademark or placard. Dangerous drugs include all drugs and devices, which are prohibited by Federal or State law from being dispensed without a prescription. Controlled substances include cocaine, marijuana, narcotics and all other drugs and materials which are controlled under Federal or State law. Drug paraphernalia includes roach clips, gram scales and any other property or material, which Company deems is intended or has been adapted or modified for drug use. Alcoholic beverages include liquor, beer and wine, except liquor, beer and wine stored in passenger vehicles. "Under the influence" means having detectable levels of dangerous drugs, controlled substances or alcohol in the breath, blood or urine.

Employees will not be permitted to work while under the influence of drugs or alcohol. Individuals who appear to be unfit for duty will be released from duty and may be subject to a physical examination at a designated medical facility. Refusal to comply with a fitness-for-duty examination may result in disciplinary action up to and including DISCHARGE.

Any employee who uses or is found to be in possession or under the influence of these illegal or unauthorized items at, upon or within these Company facilities or vehicles will be relieved from duty immediately and subject to disciplinary action up to and including DISCHARGE. Others who use or are found to be in possession or under the influence of such items at, upon or within these Company facilities or vehicles will be removed from Company's vehicles and facilities and denied future admission to Company property.

Company reserves the right to search, inspect and submit to laboratory testing persons and property found at, upon or within Company facilities or vehicles. Entry onto operational facilities or vehicles constitutes consent to searches or inspections. Any employee who refuses to submit his person or property to search, inspection or testing or who refuses to consent to the release of medical information in connection with a company physical examination or relevant to any accident, injury or incident involving the employee and relating to the safety, health or welfare of the employee, other employees or the public will be relieved from duty immediately and subject to disciplinary action up to and including DISCHARGE; others at, upon or within Company facilities or vehicles who refuse to submit their persons or property to search, inspection or testing will be removed from and denied future admission to Company property.

Off-the-job illegal drug use which could adversely affect an employee's job performance or which could jeopardize the safety of other employees, the public, or company facilities, or where such usage adversely affects the public trust in the ability of the company to carry out its responsibilities, is also cause for disciplinary action, up to and including DISCHARGE. Employees who are arrested for off-the-job drug activity may be considered in violation of this policy. In deciding what action to take, the company will take into consideration the nature of the charges, the employee's present assignment and record with the company, and the impact of the employee's arrest upon the conduct of the company's business.

Employees who wish to report drug or alcohol use in violation of this policy should contact the appropriate Vice President in charge of their group or the Vice President – Human Resources, directly. The company will make every effort to protect anonymity, and such information will be treated in confidence.

Company requires that all prescriptions and over-the-counter medications at Company operational facilities and Company operational vehicles be in original containers with prescriptions showing the name and doctor of the person in possession. As an employee, you have a responsibility to determine whether or not the use of a legal prescription may present a safety risk at work. You should ensure that your physician is aware of the nature of your job. Employees who feel, or who have been informed, that the use of a legal prescription or over-the-counter medicine may affect the employee's job performance, or may affect the safety of co-workers, members of the public or the employee, must report such drug use to the Safety Department so the Company can evaluate whether the employee may continue to work. The use or being under the influence of any legally prescribed drug or over-the-counter medicine is prohibited to the extent that such use or influence may affect the safety of co-workers or members of the public, the employee's job performance or the safe or efficient operation of the Company's facilities or vehicles.

Comment [1]:

EXHIBIT IV

INSURANCE

1. Certificate Holder Definition

"Certificate Holder" shall mean EPCO Holdings, Inc., Enterprise Products Partners L.P., Enterprise Products Operating L.P., EPCO, Inc., Texas Eastern Products Pipeline Company, LLC and each of their parent, subsidiary and affiliated companies, partners and joint venturers, and each owner or joint owner of any equipment or facility operated by them.

2. Form of Additional Insured Endorsement

It is agreed that such insurance as is afforded by the policy shall apply to EPCO Holdings, Inc., Enterprise Products Partners L.P., Enterprise Products Operating L.P.,, EPCO, Inc., Texas Eastern Products Pipeline Company, LLC and each of their parent, subsidiary and affiliated companies, partners and joint venturers, and each owner or joint owner of any facility operated by one or more of them, as their interests may appear, to whom the named insured is obligated by contract to provide such insurance, but only to the extent of coverage required by such contracts as respects operations performed in connection with the insured and only if such contract was agreed to in writing or orally by the named insured or his/its representatives prior to the occurrence of any loss under such contract.

3. Form of Certificate Holder Notation

EPCO Holdings, Inc. Enterprise Products Partners L.P., Enterprise Products Operating L.P., EPCO, Inc., Texas Eastern Products Pipeline Company, LLC and each of their parent, subsidiary and affiliated companies, partners and joint venturers, and each owner or joint owner of any facility operated by one or more of them, as their interests may appear, arising from the work to be performed under oral or written contract.

P. O. Box 4324
Houston, Texas 77210
Attention: Corporate Risk

4. Additional Terms for Work to be Performed in Louisiana

In all cases where Contractor's employees (defined to include Contractor's direct, borrowed, special or statutory employees) are covered by Louisiana Worker's Compensation Act, LSA-R.S. 23:1021 *et seq.*, Company and Contractor agree that all Work performed by Contractor and its employees pursuant to any Agreement is an integral part of and essential to the ability of Company/Certificate Holder to generate Company/Certificate Holder's goods, products and services, for purposes of LSA-R.S. 23:1061(A)(1). Furthermore, Company and Contractor agree that Company/Certificate Holder is the principal or statutory employer of Contractor's employees; provided, however, this provision is included for the sole purpose of establishing a statutory employer relationship to obtain the benefits of LSA-R.S. 23:1031(C-E) and 23:1061(A) and is not intended to create an employer/employee relationship for any other purpose. Irrespective of Company/Certificate Holder's status as the statutory employer or special employer [as defined in LSA-R.S. 23:1031(C)] of Contractor's employees, Contractor shall remain primarily responsible for the payment of Louisiana worker's compensation benefits to its employees and shall not be entitled to seek contribution for any such payments from Company/Certificate Holder.

Contractor agrees that its worker's compensation insurance and employer's liability insurance policies shall be endorsed to designate Certificate Holder as an alternate employer and as a principal and statutory employer or borrowing employer.

[illegible] (EPOLP Rev 02/00)

10207 FM 1942
P.O. BOX 573
MONT BELVIEU, TEXAS 77580-0573

ENTERPRISE®

May 20, 2004

Garner Environmental Services, Inc.
Attn: Contracts Manager/Bobby
1717 West 13th Street
Deer Park, Texas

281-930-1200

Re: **Contractor/Vendor Approved List**

Bobby:

Here is your company's executed copies of the service agreements. I appreciate all your efforts in helping to set up these agreements. To keep these service agreements in place, please make sure that all insurance certificates are kept current and that all future renewal certificates are sent to:

Enterprise Products Operating LP
Attn Corporate Risk
P O Box 4324
Houston, TX 77210

Thanks again for your assistance. If you have any questions, please call. My telephone number is 281-385-4346.

Sincerely,

Jeanette Cassell
Service Agreement Coordinator

Enclosures

APPENDIX III

EPA APPENDICES

This appendix contains the following:

- ☒ EPA Hazard Evaluation
- ☒EPA Appendix C – Substantial Harm Criteria
- ☒EPA Appendix D – Determination of Worst Case Discharge Planning Volume
- ☒EPA Appendix E Required Resources and Attachments
- ☒EPA Appendix F Model Plan - Cross Reference to this USCG Format
- ❑ Other: _____
- ❑ Other: _____

Date of Manual Entries into this Appendix	***Comments and/or Content***

- ❑ If excess material from this Appendix is kept in a file instead of behind this tab, please complete the following:

Name of file: _____

Storage location: _____

Dates covered: _____

Contents: _____

HAZARD EVALUATION

[AS REQUIRED BY 40 CFR 112.20(H)(4)]

(c) HAZARD EVALUATION [40 CFR 112.20(h)(4)]

40 CFR Part 112.20 Appendix F, §1.4.1 Hazard Identification
Note: The facility maintains no surface impoundments, only aboveground tanks (ASTs). A detailed tank inventory is maintained in the facility SPCC Plan under separate cover.

Hazard Identification – Processes

A spill could potentially result from the following activities:

Loading the AST. A transfer operation due to mechanical failure or human factors is always a possibility. Such an accident would most likely result in a small or medium release.

Day-to-Day Activities. This facility does not conduct a large number of intra-terminal transfers, because it is not a manufacturing facility. Day-to-day activities are usually limited to loading and unloading transfers.

Secondary Containment Volume – Discussed in this document section 40 CFR 12 part 154.1035(b)(2)(ii).

Normal Daily Throughput Considerations. Daily throughput varies widely at the facility. Depending on the type of activity, up to 50,000 barrels can be transferred in a single transfer to the tank farm.

Appendix F, § 1.4.2 Vulnerability Analysis

Information for this section obtained primarily from the TGLO spill response map series referenced elsewhere in this FRP.

Planning Distances
Relevant observations:

- The area in which the facility is located is not tidally influenced. Section 4.0 Oil Transport and Tidal Influence Areas to Appendix C of 10 CFR 112 states a **15 mile** planning distance upstream and downstream of a facility is provided for a tidally influenced area. This is not applicable at this site.
- Attachment III to Appendix C (Calculation of Planning distance) states that calculation of a planning distance is required unless it is clear that fish and wildlife sensitive environments and public drinking water intakes would be affected. Public drinking water intakes are not located within a vulnerable distance and therefore no distance calculations were completed.

1.4.3 Analysis of the Potential for an Oil Spill

The facility is committed to responding with full manpower and resources to any spills that occur in their facility. Oil spills are always a possibility when transferring large quantities of oil. The systems that are in place, both with respect to manpower, response planning, training and automation of the transfer system, showed work to minimize the potential for spill.

1.4.4 Facility Reportable Oil Spill History

There have been no reportable oil spills under this operator or under previous operators or owners at this facility.

SUBSTANTIAL HARM CRITERIA

[AS REQUIRED BY APPENDIX C OF 40 CFR 112]

SUBSTANTIAL HARM CRITERIA [40 CFR 112.20(e) and APPENDIX C TO PART 112 SUBCHAPTER D]

IF...	THEN...
All answers are **NO** below	FEDERAL SPILL RESPONSE PLANNING REQUIREMENTS ARE MET WITH THE SPCC PLAN ALONE.
Any answer is **YES** below	THE FACILITY MUST ALSO COMPLY WITH THE FACILITY RESPONSE PLAN (FRP; 40 CFR 112.20)

Does the facility: • Transfer oil over water to or from vessels AND • Does the facility have a total oil storage capacity greater than or equal to 42,000 gallons?	**NO**
Does the facility have: • A total oil storage capacity greater than or equal to 1 million gallons AND • Within any storage area, does the facility lack **secondary containment** that is sufficiently large to contain the capacity of the largest AST plus sufficient freeboard to allow for precipitation?	**NO**
Does the facility have: • A total oil storage capacity greater than or equal to 1 million gallons AND • Is the facility located at a distance (as calculated using the appropriate formula in Attachment C-III to this Appendix or a comparable formula) such that a discharge from the facility **could cause injury to fish and wildlife sensitive environments?**	**YES**
Does the facility have: • A total oil storage capacity greater than or equal to 1 million gallons AND • Is the facility located at a distance (as calculated using the appropriate formula in Attachment C-III to this Appendix or a comparable formula) such that a discharge from the facility would shut down a **public drinking water intake**?	**NO**
Does the facility have: • A total oil storage capacity greater than or equal to 1 million gallons AND • Has the facility experienced a **reportable oil spill in an amount greater than or equal to 10,000 gallons within the past 5 years?**	**NO**

CERTIFICATION

I certify under penalty of law that I have personally examined and am familiar with the information submitted in this document, and that based on my inquiry of those individuals responsible for obtaining information, I believe that the submitted information is true, accurate, and complete.

Signature: _____ Date: 5/24/2012

Name: Robert E. Moss Title: Vice President, Houston Region Operations

DETERMINATION OF WORST CASE DISCHARGE PLANNING VOLUME

[AS REQUIRED BY APPENDIX D TO 40 CFR PART 112]

DETERMINATION AND EVALUATION OF REQUIRED RESPONSE RESOURCES FOR FACILITY RESPONSE PLANS [AS REQUIRED BY APPENDIX E OF 40 CFR PART 112]

Provided in Section 33 CFR 154.1035(b)(2)(i)(D)

Page 8 of this plan

FACILITY SPECIFIC RESPONSE PLAN (MODEL PLAN)

[AS REQUIRED BY APPENDIX F OF 40 CFR 112]

EPA Model Plan Cross Reference [Appendix F to 40 CFR 112 Subpart D]

EPA Format:	This Plan Format:
1.1 Emergency Response Action Plan (ERAP)	Front of FRP
1.2 Facility Information	Introduction and Plan Content, Page 1
1.3 Emergency Response Notification	
1.3.1 Notification	ERAP, Page 3
1.3.2 Response Equipment List	ERAP, Page 13, 14
1.3.4 Response Equipment Testing/Deployment	Page 25
1.3.4 Personnel	ERAP, Page 14, 15
1.3.5 Evacuation Plans	Page 26 (Site Specific Health & Safety Plan)
1.3.6 QI's Duties	ERAP, Page 12 - 13
1.4 Hazard Evaluation	
1.4.1 Hazard ID	Appendix III
1.4.2 Vulnerability Analysis	Appendix III
1.4.3 Analysis of Potential for an Oil Spill	Appendix III
1.4.4 Facility Reportable Oil Spill History	Appendix VI
1.5 Discharge Scenarios	
1.5.1 Small and Medium Discharges	ERAP, Page 5
1.5.2 Worst Case Discharge	ERAP Pages 6 - 9
1.6 Discharge Detection Systems	
1.6.1 Discharge Detection by Personnel	SPCC under separate cover
1.6.2 Automated Discharge Detection	SPCC under separate cover
1.7 Plan Implementation	
1.7.1 Response Resources for Small, Medium, & Worst-Case	ERAP, Page 12 - 15
1.7.2 Disposal Plans	ERAP, Page 18
1.7.3 Containment and Drainage Planning	SPCC under separate cover
1.8 Self-Inspection, Drills/Exercises, and Response Training	
1.8.1 Facility Self-Inspection	
1.8.1.1 Tank Inspection	SPCC under separate cover
1.8.1.2 Response Equipment Inspection	Appendices Page 25
1.8.1.3 Secondary Containment Inspection	SPCC under separate cover
1.8.2 Facility Drills/Exercises	
1.8.2.1 QI Notification Drill Logs	Appendix XI
1.8.2.2 Spill Team Tabletop Exercise Logs	all logs = Appendix XI
1.8.3 Response Training	
1.8.3.1 Personnel Response Training Logs	Training Logs, Appendix XIII
1.8.3.2 Discharge Prevention Meeting Logs	Training Logs, Appendix XIII
1.9 Diagrams	ERAP, Appendix VII
1.10 Security	Introduction, Page 1
2.0 Response Plan Cover Sheet	Cover Sheets
3.0 Acronyms	Appendices Pages 26 - 27
4.0 References	n/a

INTRODUCTION

The facility is classified as a "Transportation Related Onshore Facility" which operates in a NON-Higher Volume Port Area.

Non-Transportation Related Onshore Facilities must perform discharge calculations for the U.S. Environmental Protection Agency (EPA). The EPA discharge volume calculations are described as follows:

EPA Discharge Volume Calculations

- **Worst Case Discharge**
  100% of the largest single tank and/or the flow rate of pipeline pumps from underground storage for the maximum detection and shutdown time

- **Medium Discharge**
  Discharge greater than 2,100 gallons (50 Bbls) and less than or equal to 36,000 gallons (857 Bbls) or 10% of the capacity of the largest tank, whichever is less and not to exceed the WCD

- **Small Discharge**
  Discharge of less than or equal to 2,100 gallons (50 Bbls), not to exceed the WCD

Scenario Types

The occurrence of Small Discharge (SD), Medium Discharge (MD), or Worst Case Discharge (WCD) could be the result of any number of scenarios at the Facility including:

- Tank/cavern overfill and/or failure,
- Piping rupture,
- Piping leak, under pressure and not under pressure,
- Explosion or fire,
- Equipment failure (e.g. pumping system failure, relief valve failure, or other general equipment relevant to operational activities associated with internal or external facility transfers).

Response Capability Scenarios

Small Discharge = 50 Bbls
An example of a scenario that could potentially produce approximately 50 Bbls of natural gasoline: A leak that develops in the pipeline in the vicinity of the brine ponds. The brine can be corrosive to the pipe and a small hole has the potential to be undetected. ***Response Requirement*** The Facility shall identify sufficient resources, by contract or other approved means, to respond to a small discharge. The response resources shall, as appropriate, include: • Oil recovery devices with an effective daily recovery capacity equip to the amount of oil discharged in a Small Discharge or greater which is available at the Facility within two (2) hours of the detection of an oil discharge. • Oil storage capacity for recovered oily material equivalent to twice the effective daily recovery rate.
Facility Response Resources/Capability The Facility will respond to a Small Discharge with the manpower detailed in Appendix IX as well as local contract resources as detailed in Appendix II. • A 50 Bbl discharge typically will not escape the containment of the Facility. • If a fifty (50) barrel discharge escaped the Facility it would flow along natural drainage routes. If vapor conditions permit, response personnel would block the drainage routes (i.e. utilizing earth dikes) and attempt product recovery with vacuum trucks. The effectiveness of this would depend on the extent of stormwater run-off. • Product that could not be stopped in this manner would continue to flow along natural drainage routes and be recovered when weather conditions allow. • Oil containment and recovery devices can be secured from Enterprise and contract resources (with a minimum effective daily recovery capacity of 50 Bbls) and can be implemented at the Facility as the situation demands. • A minimum of 100 Bbls of oil storage capacity for recovered oily material can be secured from contract resources or made available within the Facility's storage facilities, as the situation demands. • Additional recovery and storage equipment may be secured by contract resources, as the situation demands.
Notes:

Response Capability Scenarios

Medium Discharge = 100 Bbls
An example that could produce a medium discharge of natural gasoline is a seal failure at the well pump. ***Response Requirement*** The Facility shall identify sufficient resources, by contract or other approved means, to respond to a medium discharge. The response resources shall, as appropriate, include: • Oil recovery devices with an effective daily recovery capacity equip to 50% of the Medium Discharge volume must be capable of arriving on scene within 12 hours. • Sufficient quantity of containment boom must arrive within 12 hours for oil collection and containment and for protection of fish and wildlife and sensitive environments, as appropriate. • Temporary storage capacity equal to or twice the daily recovery capacity must be available.
Facility Response Resources/Capability The Facility will respond to a Medium Discharge with a similar response to the Small Discharge. Additional response resources will be activated from an Oil Spill Removal Organization(s) OSRO) as detailed in Appendix II. • Oil recovery devices with an effective daily recovery capacity of 50 Bbls (50% of the Medium Discharge volume) secured from the OSRO(s) will be on scene within 12 hours. • 100 Bbls of oil storage capacity for recovered oily material will be secured from the OSRO(s) and/or made available within the Facility's storage facilities. • Containment boom for oil collection and containment and for protection of fish and wildlife and sensitive areas will be secured from the OSRO(s) in the event that the spill escapes the boundaries of the Facility and impacts the storm sewer collection basins.
Notes:

Response Capability Scenarios

Worst Case Discharge = 336 Bbls

Response Requirement

The Facility shall identify sufficient resources, by contract or other approved means, to respond to a worst case discharge to the maximum extent practicable. The response resources shall, as appropriate, include:

- All resources shall be capable of arriving at the Facility within the applicable response tier requirements (Tier 1 = 12 hours; Tier 2 = 36 hours; Tier 3 = 60 hours).
- Oil recovery devices with an effective daily recover capacity equal to the lesser of 50% of the WCD or the response caps. If the daily recovery rate exceed the applicable contracting caps (see Table) then the Facility must identify additional resources equal to twice the cap or the amount necessary to reach the calculated planning volume.
- Temporary storage capacity equal to or twice the daily recovery capacity.
- At least 20% of the on-water response equipment should be capable of operating in water of 6 feet or less depth.
- Containment boom for oil collection and containment and for protection of areas of environmental sensitivity or economic importance.
- Identify resources capable of responding to a shoreline clean-up operation involving the calculated volume of oil and emulsified oil that might impact the affected shoreline.

Facility Response Resources/Capability

The Facility will respond to a Worst Case Discharge (WCD) initially with a similar response as identified for a small or medium discharge. Additional OSRO(s) will be activated as the situation demands. The response resources will be capable of arriving within the required response tiers and will include:

- Oil recovery devices with an effective daily recovery capacity equal to the lesser of 50% of the WCD or the response caps will be secured from the OSRO(s) and other Enterprise resources. Any amount in excess of the required caps will be contracted for and responded to as part of the same response effort.
- Temporary storage capacity equal to twice the daily recovery capacity will be secured from OSRO(s), other Enterprise resources, or made available within the Facility's storage facilities.
- At least 20% of the on-water response equipment secured from the OSRO(s) and other Enterprise resources will be capable of operating in water of 6 feet or less depth.
- Containment boom for oil collection and containment and for protection of fish and wildlife and sensitive environments and socio-economic sensitivities will be secured from the OSRO(s) and other Enterprise resources.
- Resources capable of responding to a shoreline clean-up operation involving the calculated volume of oil and emulsified oil that might impact the shoreline will be secured from the OSRO(s) and other Enterprise resources.

Notes:

Worst Case Discharge Discussion	
Type of Operation:	Wellhead/Pump Failure
Volume of Discharge:	296 Bbls
Material Discharged:	Natural Gasoline (Group 2 Oil)

Likelihood that the discharge will travel offsite:

The Facility has sufficient detection systems on the wellhead and pump stations to detect and shutdown the system within a reasonable amount of time.

In the event a discharge would occur from the wellhead/pump station the escaped product would flow along natural drainage routes into Smith Gully. Smith Gully flows into Cedar Bayou. The shoreline along Smith Gully is steep and overgrown and response would be difficult along the gully except for at the State Highway 146 crossing. Once the spill reached Cedar Bayou, the shoreline is more accessible to response personnel and the spill would be boomed off to prevent further spreading.

The Facility has contracts in place with two (2) OSROs which are based in the Houston Area and capable of responding to the Facility within two (2) hours of notification. The OSROs are familiar with the area and have sufficient resources to contain, recover, and temporarily store the lost product and any extra water that is recovered.

The engineering design of the Facility is such that it will contain most leaks or small spills within the facility boundaries and/or immediate area surrounding the potential source. Under extreme conditions (i.e. gasket failure of a pump) where the pump is allowed to pump freely onto the open ground, the discharge could potentially escape the Facility.

Enterprise, OSRO, and other resources would be utilized to implement containment boom/earthen dike and skimmer/recovery equipment in such a manner to limit the overall impact of the spill on the area surrounding the Facility.

Medium Impacted:	Dry land with drainage into Smith Gully and eventually into Cedar Bayou
Weather Conditions:	Heavy rain and limited visibility

APPENDIX IV

SPCC PLAN

(UNDER SEPARATE COVER)

This appendix contains the following:

- ☒ The SPCC Plan was completed by The WCM Group in 2006 and updated by Enterprise Products Operating LLC. The SPCC Plan is a large volume and may be maintained separately but easily accessible to this document.
- ❑ Other: _____
- ❑ Other: _____

Date of Manual Entries into this Appendix	***Comments and/or Content***

- ❑ If excess material from this Appendix is kept in a file instead of behind this tab, please complete the following:

Name of file: _____
Storage location: _____
Dates covered: _____
Contents: _____

APPENDIX V

FACILITY OSPRA PLANNING ELEMENTS (TGLO)

This appendix contains the following:

- ☒ Information relative to the TGLO waterfront facility certification process (unless a notation is made below to the contrary and the information is kept elsewhere).
- ❑ Other: _____
- ❑ Other: _____

Date of Manual Entries into this Appendix	***Comments and/or Content***
Date of Plan	*This facility is not a waterfront facility.*

- ❑ If excess material from this Appendix is kept in a file instead of behind this tab, please complete the following:

Name of file: _____
Storage location: _____
Dates covered: _____
Contents: _____

APPENDIX VI

HISTORICAL SPILL INFORMATION

This appendix contains the following:

☒ Summary information on any spills that occur at the facility.

Other: _____

❑ Other: _____

Date of Manual Entries into this Appendix	***Comments and/or Content***

❑ If excess material from this Appendix is kept in a file instead of behind this tab, please complete the following:

Name of file: _____
Storage location: _____
Dates covered: _____
Contents: _____

Reportable Oil Spill History

The Facility maintains a separate Oil Spill History file in the Facility office. The Facility's file contains the below listed information to the extent that such information is reasonably identifiable.

- Date of discharge.
- Location of discharge.
- Discharge cause(s).
- Material(s) discharged.
- Amount discharged.
- Amount of discharge that reached navigable waters.
- Amount recovered.
- Effectiveness and capacity of secondary containment.
- Clean-up actions taken.
- Steps taken to reduce possibility of recurrence.
- Total storage capacity of the tank(s) or impoundment(s) from which the material discharged.
- Enforcement actions.
- Effectiveness of monitoring equipment.
- Description of how spill was detected.

Reportable Oil Spill History (Cont'd)

Date of discharge.	
Location of discharge.	
Discharge cause(s).	
Material(s) discharged	
Amount discharged.	
Amount of discharge that reached navigable waters.	
Amount recovered.	
Effectiveness and capacity of secondary containment.	
Clean-up actions taken.	
Steps taken to reduce possibility of recurrence.	
Total storage capacity of the tank(s) or impoundment(s) from which the material discharged.	
Enforcement actions.	
Effectiveness of monitoring equipment.	
Description of how spill was detected.	

APPENDIX VII

FACILITY DIAGRAMS AND AERIAL PHOTOS

This appendix contains the following:

☒ Generalized facility diagram
❑ Other: Area Maps
❑ Other: _____

Date of Manual Entries into this Appendix	***Comments and/or Content***

❑ If excess material from this Appendix is kept in a file instead of behind this tab, please complete the following:

Name of file: _____
Storage location: _____
Dates covered: _____
Contents: _____

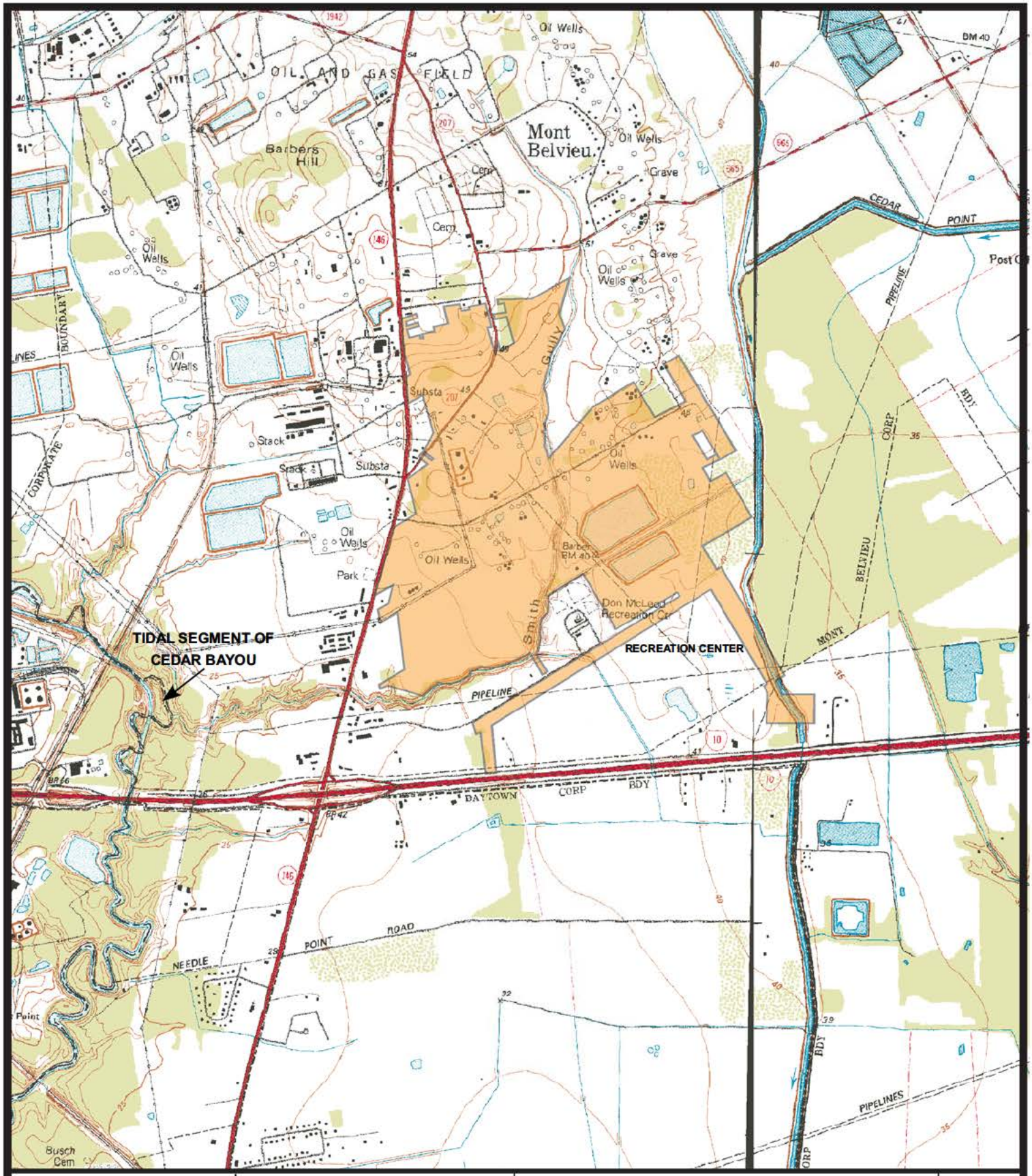

ENVIRONMENTAL PROFESSIONALS
WCM
The WCM Group, Inc.
P.O. Box 3247
Humble, TX 77347-3247
(281) 446-7070 Fax (281) 446-3348

Location on 7.5 Minute USGS Topo Quad:
Mont Belvieu & Cove Texas; Zone 15

TOPOGRAPHIC MAP

ENTERPRISE PRODUCTS OPERATING LLC
MONT BELVIEU COMPLEX
MONT BELVIEU, CHAMBERS COUNTY, TEXAS

DRAWN BY:	ALA
DATE:	06/17/2011
REV. DATE:	05/23/2012
DRAWING ID:	H:client\EPO\MTB\East Storage\2012 FRP\Topo Map.cvx

SCALE
0 1166 2330
ONE (1) INCH ~ 2,330 FEET

N

FIGURE
1

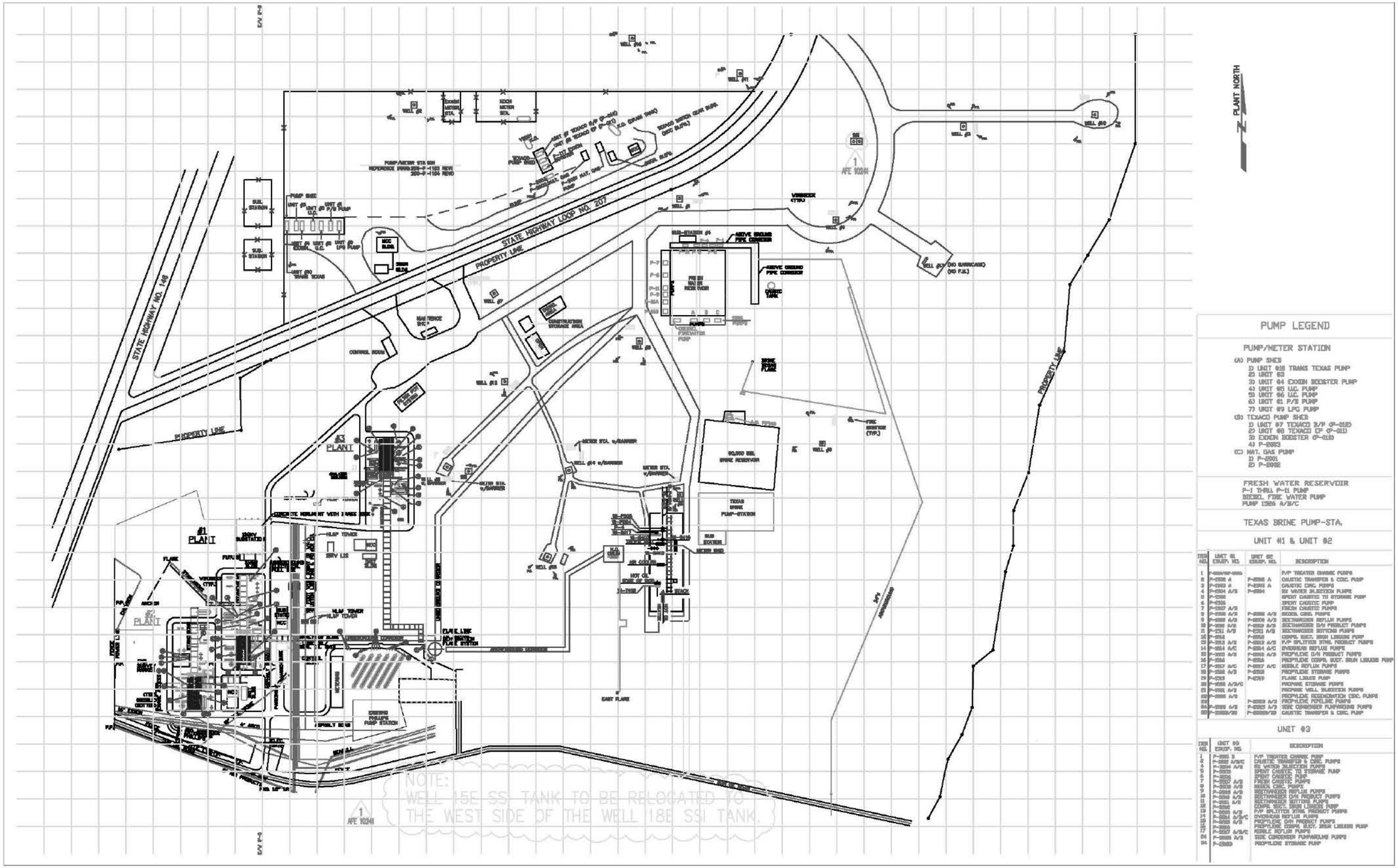

PUMP LEGEND

PUMP/METER STATION

(A) PUMP SHED
- 1) UNIT #10 TRANS TEXAS PUMP
- 2) UNIT #3
- 3) UNIT #4 EXXON BOOSTER PUMP
- 4) UNIT #5 LIC. PUMP
- 5) UNIT #6 LIC. PUMP
- 6) UNIT #1 P/B PUMP
- 7) UNIT #9 LPG PUMP

(B) TEXACO PUMP SHED
- 1) UNIT #7 TEXACO B/P (P-012D)
- 2) UNIT #8 TEXACO EP (P-011)
- 3) EXXON BOOSTER (P-010)
- 4) P-2003

(C) NAT. GAS PUMP
- 1) P-2001
- 2) P-2002

FRESH WATER RESERVOIR
P-1 THRU P-11 PUMP
DIESEL FIRE WATER PUMP
PUMP 1385 A/B/C

TEXAS BRINE PUMP-STA.

UNIT #1 & UNIT #2

ITEM NO.	UNIT #1 EQUIP. NO.	UNIT #2 EQUIP. NO.	DESCRIPTION
1	P-2001/SP-2005		P/P TREATER CHARGE PUMPS
2	P-2002 A	P-2002 A	CAUSTIC TRANSFER & CIRC. PUMP
3	P-2003 A	P-2003 A	CAUSTIC CIRC. PUMPS
4	P-2004 A/B	P-2004	BH WATER INJECTION PUMPS
5	P-2005		SPENT CAUSTIC TO STORAGE PUMP
6	P-2006		SPENT CAUSTIC PUMP
7	P-2007 A/B		FRESH CAUSTIC PUMPS
8	P-2008 A/B	P-2008 A/B	RECIRC. CIRC. PUMPS
9	P-2009 A/B	P-2009 A/B	DEETHANIZER REFLUX PUMPS
10	P-2010 A/B	P-2010 A/B	DEETHANIZER D/A PRODUCT PUMPS
11	P-2011 A/B	P-2011 A/B	DEETHANIZER BOTTOMS PRODUCT PUMPS
12	P-2012	P-2012	DEETHANIZER BOTTOMS PUMP
13	P-2013	P-2013	CONPR. SUCT. DRUM LIQUIDS PUMP
14	P-2014 A/B	P-2014 A/B	P/P SPLITTER BTMS. PRODUCT PUMPS
15	P-2015 A/C	P-2015 A/C	DEBUTANIZER REFLUX PUMPS
16	P-2016 A/B	P-2016 A/B	PROPYLENE D/A PRODUCT PUMPS
17	P-2017	P-2017	PROPYLENE CONPR. SUCT. DRUM LIQUIDS PUMP
18	P-2018 A/C	P-2018 A/C	BUTANE REFLUX PUMPS
19	P-2019 A/B	P-2019	PROPYLENE STORAGE PUMPS
20	P-2019	P-2019	PLANT LIQUID PUMP
21	P-2020 A/B/C		PROPANE STORAGE PUMPS
22	P-2021 A/B		PROPANE WELL INJECTION PUMPS
23	P-2022 A/B		PROPYLENE REGENERATION CIRC. PUMPS
24			PROPYLENE PIPELINE PUMPS
25	P-2023 A/B	P-2023 A/B	93% CONDENSER PUMPAROUND PUMPS
26	P-2024 A/B	P-2024 A/B	CAUSTIC TRANSFER & CIRC. PUMP
27	P-2025		PROPYLENE STORAGE PUMP

UNIT #3

ITEM NO.	UNIT #3 EQUIP. NO.	DESCRIPTION
1	P-2001 B	P/P TREATER CHARGE PUMP
2	P-2002 A/B/C	CAUSTIC TRANSFER & CIRC. PUMPS
3	P-2004 A/B	BH WATER INJECTION PUMPS
4	P-2005	SPENT CAUSTIC TO STORAGE PUMP
5	P-2006	SPENT CAUSTIC PUMP
6	P-2007 A/B	FRESH CAUSTIC PUMPS
7	P-2008 A/B	RECIRC. CIRC. PUMPS
8	P-2009 A/B	DEETHANIZER REFLUX PUMPS
9	P-2010 A/B	DEETHANIZER D/A PRODUCT PUMPS
10	P-2011 A/B	DEETHANIZER BOTTOMS PUMPS
11	P-2012	CONPR. SUCT. DRUM LIQUIDS PUMP
12	P-2014 A/B	P/P SPLITTER BTMS. PRODUCT PUMPS
13	P-2015 A/B/C	OVERHEAD REFLUX PUMPS
14	P-2016 A/B	PROPYLENE D/A PRODUCT PUMPS
15	P-2017	PROPYLENE CONPR. SUCT. DRUM LIQUIDS PUMP
16	P-2018 A/B/C	BUTANE REFLUX PUMPS
17	P-2019 A/B	93% CONDENSER PUMPAROUND PUMPS
18	P-2020	PROPYLENE STORAGE PUMP

NOTES
1. FOR WELL HEAD #8, 13 & 14 DETAILS, SEE DWG'S: 1248P1000-D-MB,1253P1000-D-MB,1254P1000-D-MB

FOREIGN DWG# 1200C0001-D-MB

REFERENCE DRAWINGS		No.	REVISION	BY	DATE	CHK
NUMBER	TITLE	0	AS BUILT	VGJ	7/08	PSH
4PS-803-107		1	RELOCATED SSI TANK	BEA	1/09	RD
4PS-803-111		2	ADDED EPC BORDER	SDP	5/12/09	
4PS-803-112						
4PS-803-113						
4PS-803-114						
A-0001						

Enterprise Products Operating L.P.
Houston, Texas

LOCATION: EAST STORAGE FACILITY, MONT BELVIEU, TEXAS
SCALE: NONE
DRAWN BY: VGJ
CHECKED BY:

EAST PLANT PLOT PLAN

DATE: 7/08
APPROVED:
PROJECT No.: DM0152
DRAWING NUMBER: 0463E-976-0001
REV.: 2

5/12/09 - SDP

ENTERPRISE PATH - O:\ENTERPRISE\DESIGN\DWG\976\0463E\0463E_0001.DWG

APPENDIX VIII

FISH AND WILDLIFE SENSITIVE AREAS INFORMATION

This appendix contains the following:

☒ TGLO maps pertaining to the general area surrounding the facility.
☒ Map legend.
❑ Other: _____
❑ Other: _____

Date of Manual Entries into this Appendix	***Comments and/or Content***

❑ If excess material from this Appendix is kept in a file instead of behind this tab, please complete the following:

Name of file: _____
Storage location: _____
Dates covered: _____
Contents: _____

Mont Belvieu Base Map

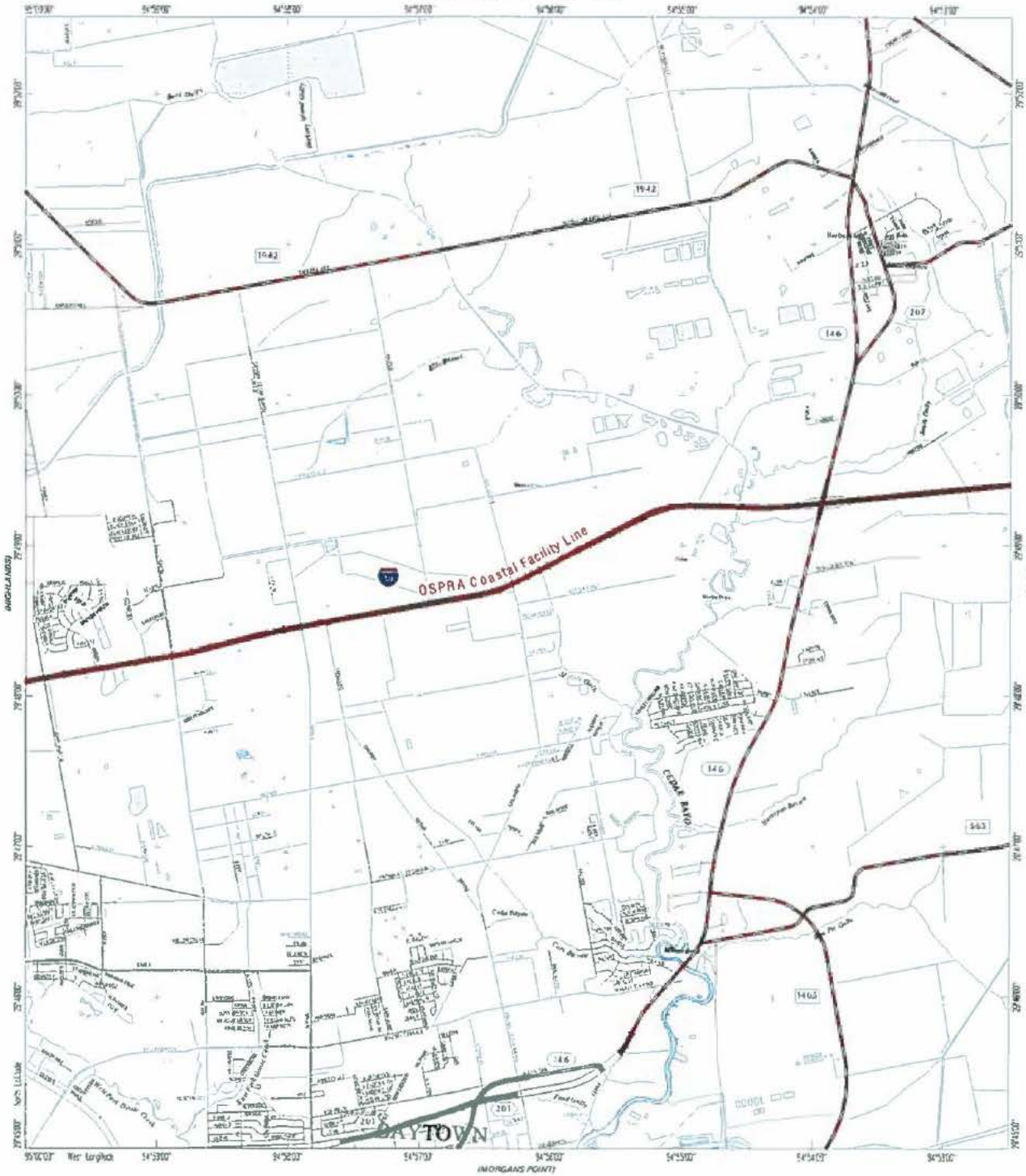

TEXAS
GENERAL LAND OFFICE
OIL SPILL
PREVENTION & RESPONSE

2994-332

Miles

Nautical Miles

Feet

Kilometers

Map Legend

- Lake, Bay, River
- Marsh, Wetland, Swamp
- Flats (Mud, Sand, Tidal)
- Divided Highway TxDOT
- State/Federal Highway TxDOT
- City Street/County Road TxDOT
- OSPRA Coastal Facility Designation Line GLO

SENSITIVE ENVIRONMENTAL AND ECONOMIC RESOURCES

This table considers resources fifteen (15) miles upstream and downstream from the facility, but focuses on those in greatest proximity.

Feature	**Risk that Would be Posed by Spill**	**Elaboration**
water intakes	HIGH	Public. No public water intakes (e.g., drinking water) were identified in the area surrounding the facility. Private. There are no private water intakes located near the facility.
schools	low	• None identified in the near vicinity, which is heavy industrial in nature. The oil products handled do not produce a significant vapor or fire hazard.
medical facilities	low	• None identified in the near vicinity
residential areas	low	• None in the near vicinity.
businesses	HIGH	• Operations of co- located and adjacent facilities and operations may be affected. These facilities are included on call-out lists.
wetlands	low	• None in the near vicinity.
fish and wildlife	low	• Not expected to be abundant in the near vicinity.
lakes and streams	low	• see wetlands (map from Texas General Land Office)
endangered fauna and flora	low	• endangered species are not expected to be abundant within this general area, although waterfowl may traverse the region.
recreational areas	low	• None in the near vicinity (see Figure 1)
Transportation routes	HIGH	• Any spill from this facility could disrupt truck traffic on the State Highway 146 and State Highway Loop 287
utilities	low	• None in the near vicinity.
other areas	low	• None in the near vicinity.

From: Clonts, Michael
Sent: Tuesday, April 17, 2012 9:34 PM
To: 'smith.donaldp@epa.gov'
Subject: FW: FRP-06-TX-00625 EPA FRP_SPCC inspection results

Don,
I assume he sent this 30 day extension request to me because I originated the inspection results e-mail. How do you want me to respond? This one is the Enterprise, Mont Belvieu facility. Largest AST is 2,551 gallons! This is the drive-by inspection to check the 6 small tanks, but the one that has 105,435,036 gallons of crude in salt domes. Also, you received a SPCC Plan that has me confused because it is a Shell PL SPCC Plan labeled Mont Belvieu, per your request, from O'Brian's. Do you remember if Brenda Ganter said Shell is responsible for the SPCC Plan? I will be calling RMA to inquire about this. Let me know about the extension request.
Later

From: Fields, Jon [mailto:JEFIELDS@eprod.com]
Sent: Tuesday, April 17, 2012 6:03 AM
To: Clonts, Michael
Cc: Stratton, Kimberly; 'smith.donaldp@epa.gov'; Fields, Jon
Subject: RE: FRP-06-TX-00625 EPA FRP_SPCC inspection results

Mike,

Enterprise has prepared a draft revision to the FRP-06-TX-00625 document and is currently arranging a meeting with stakeholders to conduct a formal review. Enterprise is requesting a 30-day extension to the initial due date to allow us to complete this review and finalize the document. If acceptable Enterprise will submit the revised FRP by May 27, 2012.

Thank you,

Jon E. Fields
Senior Manager, Environmental
Houston Region
(281) 385 - 4300 (Office)
(832) 596 - 7176 (Cell)

From: Clonts, Michael [mailto:M.Clonts@WestonSolutions.com]
Sent: Wednesday, March 28, 2012 7:00 PM
To: Ganter, Brenda
Cc: Fields, Jon; Stratton, Kimberly; 'smith.donaldp@epa.gov'
Subject: FRP-06-TX-00625 EPA FRP_SPCC inspection results

Dear Ms. Ganter:

On March 15, 2012, representatives of the U.S. Environmental Protection Agency (EPA) conducted an Oil Pollution Prevention (40 CFR Part 112) inspection at the Enterprise Products Operating LLC, East

Storage/Splitter III Facility located at 316 S. Main, Mont Belvieu, TX. The inspection included a Facility Response Plan (FRP) review and Spill Prevention Control and Countermeasure (SPCC) Plan verification. Results of the compliance review and deficiencies noted are attached.

Please provide to this office, within 30 days of the date of this message, documentation, photographs, etc., as necessary to clearly demonstrate that the deficiencies have been corrected, or provide a firm schedule for achieving compliance with the oil pollution regulations. If no response is received within 30 days, potential enforcement actions may follow. Please provide your response to:

Don Smith, Sr. On Scene Coordinator
U. S. Environmental Protection Agency
(6SF-PO)
1445 Ross Avenue
Dallas, Texas 75202-2733

If you have any questions regarding this correspondence, please contact Don Smith at (214) 665-6489.

Mike Clonts
Senior Project Leader
Weston Solutions, Inc.
3900 Dallas Parkway, Ste. 175
Plano, TX 75093
469.666.5526 - direct
972.977.1689 - cell
M.Clonts@westonsolutions.com
http://www.westonsolutions.com

CONFIDENTIALITY: This email and attachments may contain information which is confidential and proprietary. Disclosure or use of any such confidential or proprietary information without the written permission of Weston Solutions, Inc. is strictly prohibited. If you received this email in error, please notify the sender by return e-mail and delete this email from your system. Thank you.

This message (including any attachments) is confidential and intended for a specific individual and purpose. If you are not the intended recipient, please notify the sender immediately and delete this message.

From: Clonts, Michael
Sent: Monday, April 02, 2012 11:04 AM
To: 'bganter@eprod.com'
Cc: 'smith.donaldp@epa.gov'
Subject: FRP-06-TX-00625 EPA FRP electronic checklist
Attachments: FRP-06-TX-00625 FRP Checklist2.xlsx

Brenda,
Per your request, see the attached.
Mike

From: Clonts, Michael
Sent: Thursday, March 29, 2012 6:40 AM
To: Ganter, Brenda
Cc: Don Smith
Subject: Re: FRP-06-TX-00625 EPA FRP_SPCC inspection results

Don and I are headed to AR this morning. I'll ask when he gets here.

Sent from my iPhone

On Mar 29, 2012, at 5:53 AM, "Ganter, Brenda" <BGanter@eprod.com> wrote:

> Mike,
> Is it possible to receive the electronic version of the 2 checklist attached in your email. Rather than retyping each individual deficiency onto another document we would be able to use the form to add our comments and as a means of internally tracking the status.
> Thanks,
> Brenda
> 281-797-0795
>
> **From:** Clonts, Michael [mailto:M.Clonts@WestonSolutions.com]
> **Sent:** Wednesday, March 28, 2012 7:00 PM
> **To:** Ganter, Brenda
> **Cc:** Fields, Jon; Stratton, Kimberly; 'smith.donaldp@epa.gov'
> **Subject:** FRP-06-TX-00625 EPA FRP_SPCC inspection results
>
> Dear Ms. Ganter:
>
> On March 15, 2012, representatives of the U.S. Environmental Protection Agency (EPA) conducted an Oil Pollution Prevention (40 CFR Part 112) inspection at the Enterprise Products Operating LLC, East Storage/Splitter III Facility located at 316 S. Main, Mont Belvieu, TX. The inspection included a Facility Response Plan (FRP) review and Spill Prevention Control and Countermeasure (SPCC) Plan verification. Results of the compliance review and deficiencies noted are attached.
>
> Please provide to this office, within 30 days of the date of this message, documentation, photographs, etc., as necessary to clearly demonstrate that the deficiencies have been corrected, or provide a firm schedule for achieving compliance with the oil pollution

regulations. If no response is received within 30 days, potential enforcement actions may follow. Please provide your response to:

Don Smith, Sr. On Scene Coordinator
U. S. Environmental Protection Agency
(6SF-PO)
1445 Ross Avenue
Dallas, Texas 75202-2733

If you have any questions regarding this correspondence, please contact Don Smith at (214) 665-6489.

<image001.jpg>
Mike Clonts
Senior Project Leader
Weston Solutions, Inc.
3900 Dallas Parkway, Ste. 175
Plano, TX 75093
469.666.5526 - direct
972.977.1689 - cell
M.Clonts@westonsolutions.com
http://www.westonsolutions.com

CONFIDENTIALITY: This email and attachments may contain information which is confidential and proprietary. Disclosure or use of any such confidential or proprietary information without the written permission of Weston Solutions, Inc. is strictly prohibited. If you received this email in error, please notify the sender by return e-mail and delete this email from your system. Thank you.

This message (including any attachments) is confidential and intended for a specific individual and purpose. If you are not the intended recipient, please notify the sender immediately and delete this message.

U.S. EPA Facility Response Plan (FRP) -- Review Form

I. Facility Information

FRP Number: ***FRP-06-TX-00625***	Facility Name: ***East Storage/Splitter III***	
Facility Owner: ***Enterprise Products Operating LLC***		
Facility Operator (if different from owner):		
Mailing Address: ***316 S. Main, P. O. Box 573***		
City: ***Mont Belvieu***	State: ***TX***	Zip: ***77580-0573***
Telephone: ***281-385-0510***	Fax:	
Latitude: ***29.8380555***	Longitude: ***-94.891111***	
Other Description or Directions:		
Site Location Map Attached (Y/N) : ***N***		

II. Facility Overview

Date of Initial Facility Operation:	6/1/1995		
Total Storage Capacity (bbls/gals):	***105,435,036 gal***		# Of Tanks: ***6***
Worst Case Discharge (bbls/gals):	***15,372 gal***		
Actual Worst Case Discharge (barrels) calculated from Worst Case Discharge Worksheet	#REF!		
Actual Worst Case Discharge (gallons) calculated from Worst Case Discharge Worksheet	#REF!		
Capacity of Largest Above Ground Storage Tank (bbls/gals): ***2,551***			
Name of Affected Waterway(s)/Protected Waterway(s)/Environmentally Sensitive Area (A): ***Smith Gully, Cedar Bayou***			
Distance from Facility:			
Resposne Contractor(s): ***Garner Environmental Services, Inc.***			

Yes	No	
√		Standard Response Plan Cover Sheet Submitted with Plan.
√		Emergency Response Action Plan Submitted with Plan or as Separate Part of Plan.
	√	Facility Response Plan Follows 40 CFR 112 Appendix F Format.

III. FRP Applicability [40 CFR 112.20 (f)(1)]			
√	The facility transfers oil over water to or from vessels and has a total oil storage capacity greater or equal to 42,000 gallons.		
	-OR-		
	The facility's total oil storage is greater than or equal to 1 million gallons, and one of the following is true:		
	The facility does not have secondary containment for each aboveground storage area sufficienty large to contain the capacity of the largest aboveground oil storage tank within each storage area plus sufficient freeboard to allow for precipitation.		
√	The facility is located at a distance such that a discharge from the facility could cause injury to fish and wildlife and sensitive environments.		
	The facility is located at a distance such that a discharge from the facility would shut down a public drinking water intake.		
	The facility has had a reportable spill in an amount greater than or equal to 10,000 gallons with in the last 5 years.		
	Substantial Harm Facility	√	Significant and Substantial Harm Facility
Reviewed by:	*Mike Clonts*	Date:	3/15/2012
FRP Status:		Date:	
Approved by:		Date:	

NOTE: The following checklist items correspond to the final regulations as outlined in 40 CFR 112.20, Appendix F. For all checklist items, indicate FRP adequacy as follows: adequately addressed (YES), deficient or not addressed (NO), or not applicable (N/

Facility Response Plan
Plan Review Checklist
For Verifying Compliance with Facility Response Plan Requirements

Activity Information		
Activity Type		FRP Plan Review
Reason for Review		Initial Plan Submittal (new FRP)
		5-year Review
		Plan Amendment (note type)
	√	Other (note other reason)
		Note: ***Pre-inspection review***
Activity Date		3/15/2012
EPA Inspector		***Mike Clonts***

112.20(h)(11)	**A. Response Plan Cover Sheet (sec. 2.0)**	YES	NO	N/A
	General Information (sec 2.1)			
	Facility name	√		
	Facility address	√		
	Facility telephone number	√		
	Mailing address (if different from facility address)	√		
	Facility owner/operator and address **(recommended)**	√		
	Facility owner telephone **(recommended)**	√		
	Dun & Bradstreet number	√		
	Longitude (degrees, minutes, seconds)	√		
	Latitude (degree, minutes, seconds)	√		
	North American Industrial Classification System (NAICS) code	√		
	Facility start up date **(recommended)**	√		
	Facility acres **(recommended)**	√		
	Name of protected waterway or environmentally sensitive area	√		
	Distance to navigable water	√		
	Worst case discharge amount (gallons)	√		
	Maximum oil storage capacity (gallons)	√		
	Largest aboveground storage tank (AST) capacity (gallons)	√		
	Total number of ASTs	√		
	Total number of underground storage tanks (USTs)			√
	Total UST storage			√
	Total storage of drums and transformers that contain oil			√
	Number of surface impoundments and total storage of surface impoundments			√
	Applicability of Substantial Harm Criteria (sec.2.2)			
	Attachment C-1 with answer to each applicability question	√		
	Documentation of reliability and analytical soundness of alternate formula			√
Please use the following space to note any missing or incomplete information.				
	Certification (sec. 2.3)			

	Plan holder certification is included (contains signature, title, and date)	√		
Please use the following space to note any missing or incomplete information.				
	Verification of Contract (sec. 2.4)			
	Plan holder certification is included (contains signature, title, and date)	√		
Please use the following space to note any missing or incomplete information. ***Review of the FRP was conducted in conjunction with the Enterprise, Emergency Preparedness Plan (Red Book)***				
112.20(h)(1)	**B. Emergency Response Action Plan (ERAP) (sec. 1.1)**	YES	NO	N/A
112.20(h)(1)	Separate Section of FRP	√		
112,20(h)(1)(i),	Qualified Individual (QI) Information (sec. 1.2)	√		
112,20(h)(1)(ii), 112.20(h)(3)(iii)	Emergency Notification List (sec. 1.3.1)	√		
	Spill Response Notification Form (sec. 1.3.1)	√		
112.20(h)(1)(iv)	Response Equipment List and Location (sec. 1.3.2)			√
112.20(h)(1)(iv)	Response Equipment Testing and Deployment (sec. 1.3.4)			√
112.20(h)(1)(v)	Facility Response Team List (sec. 1.3.4)		√	
112.20(h)(1)(vi)	Evacuation Plan (sec. 1.3.5)	√		
112.20(h)(1)(vii)	Immediate Actions (sec. 1.7.1)	√		
112.20(h)(1)(viii)	Facility Diagrams (sec. 1.9)	√		
	*The sections above should be extracted from the more detailed corresponding sections of the plan.			
Please use the following space to note any missing or incomplete information in the ERAP. ***See corresponding sections of this checklist for information on items marked "NO" above.***				
112.20(h)(2)	**C. Facility Information (sec. 1.2)**	YES	NO	N/A
	Facility name (sec. 1.2.1)	√		
	Street address	√		
	City, state, zip code	√		
	County	√		
	Phone number	√		
	Latitude/longitude (sec. 1.2.2)	√		
	Wellhead protection area (sec. 1.2.3)		√	
	Owner/operator (both names included, if different) (sec. 1.2.4)	√		
	QI Information (sec. 1.2.5)	√		
	-Name, position, street address, phone numbers	√		
	- Description of specific response training experience	√		
	Oil storage start-up date (sec. 1.2.6)	√		
	Facility operations description (sec. 1.2.7)	√		
	North American Industrial Classification System (NAICS) or Standard Industrial Classification code (SIC)	√		
	Dates and types of substantial expansion (sec. 1.2.8)			
Please use the following space to note any missing or incomplete information in Section 1.2 of the Plan and, to the extent possible, assess the accuracy of the information provided based on field inspection. ***The items checked "NO" above, are not addressed or inadequately addressed in the Plan. The Plan must be amended to include these items.***				
112.20(h)(1) and (3)	**D. Emergency Response Information (sec. 1.3)**	YES	NO	N/A
	Notification (sec. 1.3.1)			
	Emergency Notification Phone List		√	
	National Response Center phone number	√		

112.20(h)(1)(i)	QI (day and evening) phone numbers	√		
	Company response team (day and evening) phone numbers	√		
	Federal On-Scene Coordinator (OSC) and/or Regional Response Center (day and evening) phone numbers		√	
	Local response team phone numbers (fire department/cooperatives)	√		
	Fire marshal (day and evening) phone numbers	√		
	State emergency response phone number(s)	√		
	State Police phone number	√		
	State Emergency Response Commission (SERC) phone number	√		
	Local emergency planning committee (LEPC) phone number	√		
	Wastewater treatment facility(s) name and phone number (**recommended**)			√
	Local water supply system (day and evening) phone numbers	√		
	Weather report phone number	√		
	Local television/radio phone number(s) for evacuation notification	√		
112.20(h)(3)(i)	Spill response contractor(s)	√		
	Factories/Utilities with water intakes (**recommended**)	√		
	Trustees of sensitive areas (**recommended**)			√
	Hospital phone number	√		
	Spill Response Notification Form			
	Reporter's name, position and phone number	√		
	Company information	√		
	Incident description (source/cause)	√		
	Material (were materials discharged?)	√		
	Response action (meeting federal obligations to report, calling for responsible party, time called)	√		
	Impact	√		
	Date/time of incident, incident address/location, nearest city/state/county/zip code, distance from city/units of measure/direction from city, township, range, borough, container type/tank oil storage capacity	√		
	Units of measure, facility oil storage capacity/units of measure, facility longitude and latitude	√		
Please use the following space to note any missing or incomplete information in Section 1.3 of the Plan. Please use to assess the accuracy of the information provided based on field inspection. ***The EPA Region 6 telephone number listed in the plan is incorrect. It is more appropriate to list the EPA Region 6, 24 hour, hotline number of 1-866- 372-7745 (1-866-EPA-SPILL).***				
112.20(h)(1)(iv), 112.2	**Response Equipment (sec 1.3.2)**			
	Equipment Information			
	Equipment list	√		
	Equipment location	√		
	Release handling capabilities and limitations (e.g., launching sites)	√		
Please use the following space to note any missing or incomplete information. ***Page 5-1 of the Plan indicates the facility does not maintain spill response equipment, and OSRO's will respond to a Worst Case Discharge. Enterprise maintains two response trailers containing equipment that may be utilized in the event of a discharge. This equipment is listed in the Plan.***				
112.20(h)(3)(vi)	**E. Response Equipment List (Identify if Facility, OSRO, CO-OP owned by letters O, F, or C) (sec. 1.3.2)**	YES	NO	N/A
	Skimmers/pumps (operational status, type/model/year, number or quantity, capacity, daily effective recovery rate, storage location)	*O, F*		
	Boom (containment boom: operational status, year, number, skirt size)	*O, F*		
	Boom (sorbent boom: operational status, type/model/year, number, size (length))	*O, F*		

	Chemical countermeasure agents stored	O		
	Sorbents (type, year purchased, amount, storage location)	O, F		
	Hand tools (type, quantity, storage location)	O, F		
	Communications equipment (operational status, type and year, quantity, storage location)	O, F		
	Fire Fighting and Personnel Protective Equipment	O, F		
	Boats and Motors (operational status, type, and year, quantity, storage location)	O, F		
	Other (e.g., heavy equipment, cranes, dozers, etc.) (operational status, type and year, quantity, storage location)	O, F		
	Equipment Location	O, F		
	Amount of oil that emergency response equipment can handle and limitations (e.g., launching sites) must be descr bed.	O		
Please use the following space to note any missing or incomplete information.				
112.20(h)(8)(i) and (ii)	**F. Response Equipment Testing and Deployment Drill Log (sec. 1.3.3)**	YES	NO	N/A
	Date of last inspection or equipment test	√		
	Inspection Frequency	√		
	Date of Last Deployment	√		
	Deployment Frequency	√		
	OSRO Certification (Note: Facilities without facility owned response equipment must ensure that the Oil Spill Removal Organization that is identified in the response plan to provide this response equipment certifies that the deployment exercises have been met)	√		
Please use the following space to note any missing or incomplete information in Section 1.3.3 of the Plan and verify that the log information is up-to-date during the field inspection.				
	G. Personnel (sec. 1.3.4)	YES	NO	N/A
112.20(h)(3)(v), 112.20	**Emergency Response Personnel Information** (Personnel whose duties involve responding to emergencies, including oil discharges, even when they are not present at the site)			
	Response personnel name(s)		√	
	Facility response team title/position		√	
	Response personnel phone numbers (work/home, other)		√	
	Response personnel response time		√	
	Response personnel respons bility		√	
	Response personnel training (type and date)		√	
112.20(h)(3)(i)	**Emergency Response Contractor Information**		√	
	Response contractor name (s)	√		
	Response contractor phone numbers	√		
	Response contractor response time		√	
112.20(h)(3)(ii)	Response contractor evidence of contractual arrangements		√	
	Facility Response Team Information (Composed of Emergency Response Personnel and Emergency			
	Response team member name(s)		√	
	Response team member job function		√	
	Response team member response time		√	
	Response team member phone/pager number		√	

	Name of emergency response contractor (contractors providing facility response team services may be different than contractors providing oil spill response services)	√		
	- Response time	√		
	- Phone/pager		√	

Please use the following space to note any missing or incomplete information in Section 1.3.4 of the Plan. ***Appendix B of the FRP references the "Red Book" for the items checked "No" above. This information could not be found. The Plan must be amended to include these items.***

112.20(h)(1)(vi), 112.20(h)(3)(vii)	**H. Evacuation Plans (sec. 1.3.5)**	YES	NO	N/A
	Facility Evacuation Plan (sec. 1.3.5.1)			
	Location of stored materials	√		
	Hazard imposed by spilled materials	√		
	Spill flow direction	√		
	Prevailing wind directions and speed	√		
	Water currents, tides, or wave conditions (if applicable)	√		
	Arrival route of emergency response personnel and response equipment	√		
	Evacuation routes	√		
	Alternative routes of evacuation	√		
	Transportation of injured personnel to nearest emergency medical facility	√		
	Location of alarm/notification systems	√		
	Centralized check-in area for roll call	√		
	Mitigation command center location	√		
	Location of shelter at facility	√		
112.20(h)(3)(vii), 112.20(h)(1)(vi)	Community Evacuation Plans referenced (sec. 1.3.5.3)	√		

Please use the following space to note any missing or incomplete information in Section 1.3.5 of the plan and to assess the accuracy of the information provided based on field inspection.

112.20(h)(3)(ix)	**I. Qualified Individual's Duties (sec. 1.3.6)**	YES	NO	N/A
112.20(h)(3)(ix)(A)	Activate internal alarms and hazard communication systems	√		
112.20(h)(3)(ix)(B)	Notify Response Personnel	√		
112.20(h)(3)(ix)(C)	Identify character, exact source, amount, and extent of the release	√		
112.20(h)(3)(ix)(D)	Notify and provide information to appropriate Federal, State and local authorities	√		
112.20(h)(3)(ix)(E)	Assess interaction of spilled substance with water and/or other substances stored at facility and notify on-scene response personnel of assessment	√		
112.20(h)(3)(ix)(F)	Assess possible hazards to human health and the environment	√		
112.20(h)(3)(ix)(G)	Assess and implement prompt removal actions		√	
112.20(h)(3)(ix)(H)	Coordinate rescue and response actions		√	
112.20(h)(3)(ix)(I)	Access company funding to initiate cleanup activities		√	
112.20(h)(3)(ix)(J)	Direct cleanup activities		√	

Please use the following space to note any missing or incomplete information. ***The items checked "NO" above, are not addressed or inadequately addressed in the Plan. The Plan must be amended to include these items.***

112.20(h)(4)	**J. Hazard Evaluation (sec. 1.4)** *(See Section II, Appendix A)*	YES	NO	N/A
	Hazard Identification (sec. 1.4.1)			

	Tank Above Ground and Below Ground			
	Tanks (List Tanks by Number, Product and Shell Capacity in the space below)			
	Tank number(s)	√		
	Substance(s) stored	√		
	Quantity(s) stored	√		
	Tank type(s)/year(s) of construction	√		
	Shell capacity(s)	√		
	Failure(s)/cause(s)	√		
	Surface Impoundments (SI)			
	SI Number(s)			√
	Substance(s) Stored			√
	Quantity(s) Stored			√
	Surface area(s)/year(s) of construction			√
	Maximum capacity(s)			√
	Failure(s)/cause(s)			√
	Labeled schematic drawing	√		
	Description of transfers (loading and unloading) and volume of material	√		
	Description of daily operations	√		
	Secondary containment volume(s)	√		
	Normal daily throughput of the facility	√		
Please use the following space to note any missing or incomplete information in Section 1.4.1 of the plan and to assess the accuracy of the information in Section 1.4.1 of the plan and to assess the accuracy of the information based on field inspection. ***The facility maintains 6 (six) diesel AST's with a total capacity of 3,990 gallons plus Natural Gasoline and Diesel stored in Underground Caverns with a total capacity of 105,435,046 gallons.***				
112.20(h)(4)	**K. Vulnerability Analysis (sec. 1.4.2)** (See Appendix A - Calculation of the	YES	NO	N/A
	Analysis of potential effects of an oil spill on vulnerable areas. (Attachment C-III to Appendix C to this part provides a method that owners or operators shall use to determine appropriate distances from the facility to fish and wildlife and sensitive environments. Owners or operators can use a comparable formula that is considered acceptable by the Regional Administrator (RA). If a comparable formula is used, documentation of the reliability and analytical soundness of the formula must be attached to the Response Plan Cover Sheet.)			
	Water intakes (drinking, cooling or other)	√		
	Schools	√		
	Medical facilities	√		
	Residential areas	√		
	Businesses	√		
	Wetlands or other sensitive environments	√		
	Fish and wildlife	√		
	Lakes and streams	√		
	Endangered flora and fauna	√		
	Recreational areas	√		
	Transportation routes (air, land, and water)	√		
	Utilities	√		
	Other applicable areas of economic importance (list below)	√		

Please use the following space to note any missing or incomplete information in Section 1.4.2 of the plan and to assess the accuracy of the information based on field inspection.

112.20(h)(4)	**L. Analysis of the Potential for an Oil Spill (sec. 1.4.3)**	YES	NO	N/A
	Description of likelihood of release occurring	√		
	Oil spill history for the life of the facility	√		
	Horizontal range of potential spill	√		
	Vulnerability to natural disaster	√		
	Tank age	√		
	Other factors (e.g., unstable soils, earthquake zones, Karst topography, etc.)	√		

Please use the following space to note any missing or incomplete information in Section 1.4.3 of the Plan and to assess the accuracy of the information based on field inspection.

112.20(h)(4)	**M. Facility Reportable Oil Spill History Description (sec. 1.4.4)**	YES	NO	N/A
	Date of discharge(s)	√		
	List of discharge causes	√		
	Material(s) discharged	√		
	Amount of discharges (gallons)	√		
	Amount that reached navigable waters (if applicable)	√		
	Effectiveness and capacity of secondary containment	√		
	Clean-up actions taken	√		
	Steps taken to reduce possibility of reccurrence	√		
	Total oil storage capacity of tank(s) or impoundment(s) from which material discharged	√		
	Enforcement actions	√		
	Effectiveness of monitoring equipment	√		
	Description(s) of how each oil discharge was detected	√		

Please use the following space to note any missing or incomplete information in Sectio 1.4.4 of the Plan.

	N. Discharge Scenarios (sec. 1.5)	YES	NO	N/A
	Small Discharges (sec. 1.5.1) (Description of small discharges addressing facility operations and components including but not limited to (see. 1.5.1.1):			
	Loading and unloading operations			√
	Facility maintenance operation			√
	Facility piping	√		
	Pumping stations and sumps	√		
	Oil storage location			√
	Vehicle refueling operations			√
	Age and condition of facility components	√		
	Small volume discharge calculation for a facility	√		
	Facility-specific spill potential analysis		√	
	Average most probable discharge for complexes			√
	1,000 feet of boom (1 hour deployment time)	√		
	Correct amount of boom for complexes			√
	Oil recovery devices equal to small discharge (2 hour recovery time)	√		
	Oil storage capacity for recovered material	√		

	Scenarios Affected by the Response Efforts (sec. 1.5.1.2)			
	Size of the discharge	√		
	Proximity to downgradient wells, waterways, and drinking water intakes		√	
	Proximity to fish and wildlife and sensitive environments		√	
	Likelihood that the discharge will travel offsite (i.e., topography, drainage)	√		
	Location of the material discharged (i.e., on a concrete pad or directly on the soil)		√	
	Material discharged		√	
	Weather or aquatic conditions (i.e., river flow)		√	
	Available remediation equipment	√		
	Probability of a chain reaction of failures		√	
	Direction of discharge pathway	√		
	Medium Discharges (sec. 1.5.1) (Description of medium discharges scenarios addressing facility operations and components including but not limited to (sec. 1.5.1.1):			
	Loading and unloading operations			√
	Facility maintenance operation			√
	Facility piping	√		
	Pumping stations and sumps	√		
	Oil storage location			√
	Vehicle refueling operations			√
	Age and condition of facility components	√		
	Medium volume discharge calculation for a facility	√		
	Facility-specific spill potential analysis		√	
	Maximum most probably discharge for complexes			√
	Oil recovery devices equal to medium discharge	√		
	Availability of sufficient quantity of boom	√		
	Oil storage capacity for recovered material	√		
	Scenarios Affected by the Response Efforts (sec. 1.5.1.2)			
	Size of the discharge	√		
	Proximity to downgradient wells, waterways, and drinking water intakes		√	
	Proximity to fish and wildlife and sensitive environments		√	
	Likelihood that the discharge will travel offsite (i.e., topography, drainage)		√	
	Location of the material discharged (i.e., on a concrete pad or directly on the soil)		√	
	Material discharged		√	
	Weather or aquatic conditions (i.e., river flow)		√	
	Available remediation equipment	√		
	Probability of a chain reaction of failures		√	
	Direction of discharge pathway		√	
Please use the following space to note any missing or incomplete information in Section 1.5.1 of the Plan and to assess the accuracy of the information provided based on field inspection. ***The FRP Discharge Scenarios for small and medium releases were very limited in content, were not facility specific, and did not address the required components. The FRP checklist components marked "NO" above, were not addressed or inadequately addressed and require immediate correction.***				
112.20(h)(5)(i)	**O. Worst Case Discharge (sec. 1.5.2)** (See Appendix A) (When planning	YES	NO	N/A
	Facility Specific Worst Case Discharge Scenario		√	

	Description of worst case discharges scenarios addressing facility operations and components including but not limited to (sec. 1.5.1.1):			
	Loading and unloading operations			√
	Facility Maintenance Operation			√
	Facility Piping			√
	Pumping stations and sumps	√		
	Oil storage location			√
	Vehicle refueling operations			√
	Age and condition of facility components	√		
112 Appendix D	Correct Worst Case Discharge (WCD) calculation for specific type of facility	√		
	Correct WCD calculation for complexes			√
112 Appendix E	Sufficient response resources for WCD	√		
	Sources and quantity of equipment for response to WCD	√		
	Oil storage capacity for recovered material	√		
	Scenarios Affected by the Response Efforts (sec. 1.5.1.2)			
	Size of the discharge	√		
	Proximity to downgradient wells, waterways, and drinking water intakes		√	
	Proximity to fish and wildlife and sensitive environments	√		
	Likelihood that the discharge will travel offsite (i.e., topography, drainage)	√		
	Location of the material discharged (i.e., on a concrete pad or directly on the soil)	√		
	Material discharged		√	
	Weather or aquatic conditions (i.e., river flow)	√		
	Available remediation equipment	√		
	Probability of a chain reaction of failures		√	
	Direction of discharge pathway	√		

Please use the following space to note any missing or incomplete information in Section 1.5.2 of the Plan and to assess the accuracy of the information provided based on field inspection. ***The FRP Discharge Scenarios for a worst- case release was very limited in content and did not address the required components. The FRP checklist components marked "No" were not addressed or inadequately addressed and require immediate correction.***

112.20(h)(6)	**P. Discharge Detection Systems (sec. 1.6)**	YES	NO	N/A
	Discharge Detection by Personnel (sec. 1.6.1)			
	Description of procedures and personnel for spill detection	√		
	Description of facility inspections	√		
	Description of initial response actions	√		
	Emergency Response Information (referenced)	√		

Please use the following space to note any missing or incomplete information in Section 1.6.1 of the plan.

Section II, 112.7(e)(5)(iii)(D), 112.7(e)(5(iii), 112.7(e)(2)(viii), 112.7(e)(7)(v), Appendix A	**Automated Discharge Detection (sec. 1.6.2)**	√		
	Description of automatic spill detection equipment, including overfill alarms and secondary containment sensors	√		
	Description of alarm verification procedures and subsequent actions	√		

	Initial response actions	√		
Please use the following space to note any missing or incomplete information in Section 1.6.2 of the Plan.				
112.20(h)(7), Appendix E	**Q. Plan Implementation (sec. 1.7)**	YES	NO	N/A
	Identification of response resources for small, medium, and worst case spills (sec. 1.7.1)			
	Description of response actions	√		
	Accessibility of proper response personnel and equipment	√		
	Emergency plans for spill response	√		
	Additional response training	√		
	Additional contracted help	√		
	Access to additional response equipment/experts	√		
	Ability to implement plan, including response training and practice drills	√		
	Temporary storage	√		
	Recommended form detailing immediate action for small, medium and Worst Case spills (sec. 1.7.1.2A) (stop the product flow, warn personnel, shut off ignition sources, initiate containment, notify NRC, notify OSC, notify (as appropriate))	√		
Please use the following space to note any missing or incomplete information in Section 1.7.1 of the Plan.				
	Disposal Plan (sec. 1.7.2)			
	Description of procedures for recovering, reusing, decontaminating or disposing of materials	√		
	Materials addressed in Disposal Plan (recovered product, contaminated soil, contaminated equipment and materials (including drums tank parts, valves and shovels), personnel protective equipment, decontamination solutions, absorbents, spent chemicals))	√		
	Plan prepared in accordance with any federal, state, and/or local regulations	√		
	Plan addresses permits required to transport or dispose of recovered materials	√		
Please use the following space to note any missing or incomplete information in Section 1.7.2 of the Plan.				
Section II, 112.7(e)(1), 112.7(e)(7), Appendix A	**Containment and Drainage Planning (sec. 1.7.3)**			
	Description of containing/controlling a spill through drainage	√		
	Containment and drainage plan available			√
	Available volume of containment	√		
	Drainage route from oil storage and transfer areas			√
	Construction materials used in drainage troughs			√
	Type and number of valves and separators in drainage system			√
	Sump pump capacities			√
	Containment capacities of weirs and booms and their location			√
	Other cleanup materials			√
Please use the following space to note any missing and incomplete information in Section 1.7.3 of the Plan and to assess the accuracy of the information provided during field inspection.				

	R. Self-Inspection, Training, and Meeting Logs (sec. 1.8)	YES	NO	N/A
	Facility Self-Inspection (sec. 1.8.1)			

Section II, 112.7(e)(8)	Records of tank inspections with dates (tank leaks, tank foundations, tank Piping) contained or cross-referenced in Plan or maintained electronically for five years	√		
Section II, 112.7(e)(8)	Records of secondary containment inspections with dates (dike or berm system, secondary containment, retention and drainage ponds) contained or cross-referenced in Plan or maintained electronically for five years	√		
112.20(h)(8)(i)	Response equipment inspection			
	Response equipment checklist (sec. 1.8.1.2)	√		
	Equipment inventory (item and quantity)	√		
	Storage location (time to access and respond)	√		
	Accessibility (time to access and respond)	√		
	Operational status/condition	√		
	Actual use/testing (last test date and frequency of testing)	√		
	Shelf life (present age, expected replacement date)	√		
	- Inspection date	√		
	- Inspector's signature	√		
	- Inspection records maintained for 5 years	√		
	- Response equipment inspection log (inspector, date, comments)	√		
Please use the following space to note any missing or incomplete information in Section 1.8 of the Plan and to assess the accuracy of the information. ***Page 5-1 of the Plan indicates the facility does not maintain spill response equipment, and OSRO's will respond to a Worst Case Discharge. Enterprise maintains two response trailers containing equipment that may be utilized in the event of a discharge.***				
	Facility Drills/Exercises (sec. 1.8.2)			
	Description of drill/exercise program based on National Preparedness for Response Exercise Program (PREP) guidelines or other comparable program	√		
	- If "no" alternative program has been approved by EPA RA (describe program below)			√
	QI notification drill			√
	Spill management team tabletop exercise			√
	Equipment deployment exercise			√
	Unannounced exercise			√
	Area exercise			√
	Description of evaluation procedures for drill program			√
	Qualified Individual notification drill log (sec. 1.8.2.1)			
	Date, company, qualified individual, other contacted, emergency scenario, evaluation	√		
	Spill management team tabletop drill log (sec. 1.8.2.2)			
	Date, company, QI, participants, emergency scenario, evaluation, changes to be implemented, time table for implementation	√		
Please use the following space to note any missing or incomplete information in Section 1.8.2 of the Plan and to assess the accuracy of the information provided based on field inspection.				
	Response Training (sec. 1.8.3)			
	Description of response training program (including topics)	√		
	Personnel response training logs (name, response training date/and number of hours, prevention training date/and number of hours)	√		
	Discharge prevention meeting logs (date, attendees)	√		
Please use the following space to note any missing or incomplete information in Section 1.8.3 of the Plan and verify that the log information is up-to-date during the field inspection.				

	S. Diagrams (sec. 1.9)	YES	NO	N/A
	Site Plan Diagram			
	Entire facility to scale	√		
	Above and below-ground storage tanks	√		
	Contents and capacities of bulk oil storage tanks	√		
	Contents and capacities of drum storage areas			√
	Contents and capacities of surface impoundments			√
	Process buildings	√		
	Transfer areas	√		
	Location and capacity of secondary containment systems			√
	Location of hazardous materials	√		
	Location of communications and emergency response equipment			√
	Location of electrical equipment that might contain oil	√		
	If the facility is a complex facility, the interface between EPA and other regulating agencies			√
Please use the following space to note any missing or incomplete information in the Site Plan diagram and to assess the accuracy of the diagram based on field inspection.				
	Site Drainage Plan Diagram			
	Major sanitary and storm sewers, manholes, and drains	√		
	Weirs and shut-off valves			√
	Surface water receiving streams			√
	Fire fighting water sources	√		
	Other utilities			√
	Response personnel ingress and egress	√		
	Response equipment transportation routes	√		
	Direction of spill flow from discharge points	√		
Please use the following space to note any missing or incomplete information in the Site Drainage Plan diagram and to assess the accuracy of the diagram based on field inspection.				
	Site Evacuation Plan Diagram			
	Site plan diagram with evacuation routes	√		
	Location of evacuation regrouping areas	√		
Please use the following space to note any missing or incomplete information in the Site Evacuation Drainage Plan diagram and to assess the accuracy of the diagram based on field inspection.				

Section II, 112.7(e)(9)	T. Site Security (sec. 1.10)	YES	NO	N/A
	• Description of facility security	√		
	(Emergency cut-off locations, enclosures, guards and their duties, lighting, valve and pump locks, pipeline connection caps)	√		
Please use the following space to note any missing or incomplete information in Section 1.10 of the plan and to assess the accuracy of the information provided based on field inspection.				
Please use the following space to describe overall impressions of the facility response plan (i.e., functional, workable). A set of questions is provided in Appendix C to assist the inspector is assessing overall Plan adequacy.				
Reviewed by:	*Mike Clonts*			
Date:	*3/15/2012*			

Facility Response Plan Field Inspection Checklist

Activity Information	
Activity Type	FRP Field Inspection
Activity Date	3/15/2012
EPA Inspector	Don Smith

Facility Information								
Facility ID:	FRP Harm Category?	√	Substantial Harm					
		√	Significant & Substantial Harm					
FRP ID:	Complex?		Yes	√	No			
	If Complex, Shared Jurisdiction?		Yes		No	√	N/A	
Facility Name:	East Storage/Splitter III							
Address:	316 S. Main							
City:	Mont Belvieu							
State:	TX						Zip: 77580	
Owner/Operator:	Enterprise Products Operating LLC							
FRP Contact:	Jon Fields							
Telephone:	281-385-4300							
Email:	jefields@eprod.com							
QI:	Brenda Ganter							
Telephone:	281-385-0510							
Email:	bganter@eprod.com							
Notes/Comments: (Include County name)								

112.20(h), 112 Appendix F Section 1.0	A. General	YES	NO	N/A
112 Appendix F Section 1.0	Copy of FRP is available at the facility	√		
112.20(h)(1), 112 Appendix F Section 1.1	Copy of Emergency Response Action Plan is available at the facility.	√		
112.20(h)(1)(vi), 112.20(h)(3)(vii), 112 Appendix F Section 1.3.5	Evacuation plan is readily available.	√		

Describe how the facility incorporates the FRP into its overall training program:

Notes

112.20(h), 112 Appendix F Section 1.3.1	B. Spill Notification	YES	NO	N/A
112,20(h)(1)(ii), 112.20(h)(3)(iii), 112 Appendix F Section 1.3.1	Spill notification call-down list contains correct telephone numbers.	√		

112,20(h)(1)(ii), 112.20(h)(3)(iii), 112 Appendix F Section 1.3.1	Emergency contact information has been verified as current.	√		

Notes

112.20(h)(4), 112 Appendix F Section 1.4	**C. Hazard Evaluation**	**YES**	**NO**	**N/A**
112 Appendix F Section 1.4.1	Facility total storage capacity corresponds to storage capacity reported in the plan	√		
112 Appendix F Section 1.4.1	Secondary containment is adequate for all aboveground tanks	√		
112 Appendix F Sections 1.4.2 and 1.4.3	Following factors affecting response efforts are properly addressed / characterized:			
	- Discharge volume		√	
	- Proximity to downgradient water		√	
	- Proximity to fish and wildlife and sensitive environments		√	
	- Proximity to drinking water intakes		√	
	- Likelihood that discharge will travel offsite		√	
	- Location of material spilled (i.e., on concrete pad or soil)		√	
	- Type of material discharged		√	
	- Weather or aquatic conditions anticipated during adverse conditions		√	
	- Available remediation equipment		√	
	- Probability of chain reaction or failures		√	
	- Direction of spill		√	
112 Appendix F Section 1.4.4	History of all reportable discharges at the facility is maintained with the FRP	√		

Notes: ***The Plan should describe the planning scenario, considering the reasonably expected circumstances of a discharge that would affect the response efforts required. This would include any circumstances the may have not been addressed in the Plan (see comment under Discharge Scenarios below).***

112 Appendix F Section 1.5	**D. Discharge Scenarios**	**YES**	**NO**	**N/A**
112.20(h)(5)(i), 112 Appendix F Section 1.5.2	Worst-case discharge scenario described in Plan is accurate (e.g., source and impacts)		√	
112 Appendix F Section 1.5.1	Medium discharge scenario described in Plan is accurate (e.g., source and impacts)	√		
112 Appendix F Section 1.5.1	Small discharge scenario descr bed in Plan is accurate (e.g., source and impacts)	√		

Notes

Please clarify the WCD volume in the event the automatic well shut-off fails, including how the wells will be controlled (manual?) and the volumetric difference from the calculation presented in the Plan.

112.20(h)(1) and (h)(3)(ix), 112 Appendix F Sections 1.3.6 and 1.6	**E. Response Personnel**	**YES**	**NO**	**N/A**
112.20(h)(1)(i), 112 Appendix F Section 1.2	Qualified Individual (QI) information (name, title, telephone numbers) is current	√		

112.20(h)(3)(ix), 112 Appendix F Section 1.3.6	QI is aware of, and prepared to fulfill, responsibilities:	√		
112.20(h)(3)(ix)(A), 112 Appendix F Section 1.3.6	- Activate internal alarms and hazard communication systems	√		
112.20(h)(3)(ix)(B), 112 Appendix F Section 1.3.6	- Notify response personnel	√		
112.20(h)(3)(ix)(C), 112 Appendix F Section 1.3.6	- Identify character, exact source, amount, and extent of the release	√		
112.20(h)(3)(ix)(D), 112 Appendix F Section 1.3.6	- Notify and provide information to appropriate Federal, State, and local authorities	√		
112.20(h)(3)(ix)(E), 112 Appendix F Section 1.3.6	- Assess interaction of substances with water and/or other substances stored at facility and notify on-scene response personnel of assessment	√		
112.20(h)(3)(ix)(F), 112 Appendix F Section 1.3.6	- Assess possible hazards to human health and the environment	√		
112.20(h)(3)(ix)(G), 112 Appendix F Section 1.3.6	- Assess and implement prompt removal actions	√		
112.20(h)(3)(ix)(H), 112 Appendix F Section 1.3.6	- Coordinate rescue and response actions	√		
112.20(h)(3)(ix)(I), 112 Appendix F Section 1.3.6	- Access company funding to initiate cleanup activities	√		
112.20(h)(3)(ix)(J), 112 Appendix F Section 1.3.6	- Direct cleanup activities	√		
112 Appendix F Section 1.2	QI has specific response training experience	√		
112 Appendix F Section 1.6	Facility personnel are familiar with procedures for detecting a discharge	√		
Notes				

112.20, 112 Appendices E and F	**F. Response Equipment**	**YES**	**NO**	**N/A**
112 Appendix E Section 3.0	Required response resources for a small discharge are provided.	√		
112 Appendix E Section 3.3.1	- 1,000 ft of boom and, if marine transfer facility, boom equal to twice the length of largest vessel	√		
112 Appendix E Section 3.3.1	- Capacity of deploying boom within 1 hour of small discharge	√		
112 Appendix E Section 3.3.2	- Response equipment capable of being deployed within 2 hours of a small discharge	√		
112 Appendix E Section 3.3.2	- Response equipment daily recovery capacity equal to the total volume of small discharge	√		

112 Appendix E Section 12.2	- Temporary storage capacity equal to twice the volume of the small discharge	√		
112 Appendix E Section 4.0	Required response resources for a medium discharge are provided:	√		
112 Appendix E Section 4.5	- Sufficient quantities of boom for containment and collection and for protection	√		
112 Appendix E Section 4.4	- Response equipment daily recovery capacity equal to 50% of total volume of small discharge	√		
112.20(h)(3)(ii), 112 Appendix F Section 1.3.4	Facility has current signed contract with response contractor and/or membership in cleanup co-op.	√		
	- If YES, facility has evidence of contractor's equipment deployment exercises (annually)	√		
112.20, 112 Appendix F	Facility has its own response equipment.	√		
112.20(h)(8)(i) and (ii), 112 Appendix F Section 1.3.3, 112 Appendix F Section 1.8.1.2	- If YES, facility response equipment is regularly inspected (check logs)	√		
112 Appendix F Section 1.3.2	Following equipment is provided and, if so, is operational, accessible, and has adequate capacity:	√		
112 Appendix F Section 1.3.2(1)	- Skimmers		√	
112 Appendix F Section 1.3.2(1)	- Pumps	√		
112 Appendix F Section 1.3.2(2)	- Containment booms	√		
112 Appendix F Section 1.3.2(5)	- Sorbents	√		
112 Appendix F Section 1.3.2(3)	- Chemical countermeasures			√
112 Appendix F Section 1.3.2(7)	- Communication equipment	√		
112 Appendix F Section 1.3.2(8)	- Firefighting equipment	√		
112 Appendix F Section 1.3.2(8)	- Personal protective equipment	√		
112 Appendix F Section 1.3.2(9)	- Other equipment, boots, motors, etc.	√		
112 Appendix F Section 1.7.2	Procedures have been established for recovering, reusing, decontaminating or disposing of materials	√		

Notes

The Plan indicates the facility does not maintain spill response equipment, and OSRO's will respond to a Worst Case Discharge. Enterprise maintains two response trailers containing equipment that may be utilized in the event of a discharge.

112 Appendix F Section 1.8.1	**G. Self Inspection**	**YES**	**NO**	**N/A**
112 Appendix F Section 1.8.1	Records of tank inspections are maintained (check last 5 years of records)	√		
	The following industry standard(s) are used to inspect aboveground bulk storage containers:	√		
	- Steel Tank Institute (STI) SP-1			√

	- American Petroleum Institute (API) Standard 653			√
	- Hybrid program developed by Professional Engineer			√
	- Other (specify in notes/comments section below)			√
112 Appendix F Section 1.8.1	Records of secondary containment inspections are maintained (check last 5 years of records)	√		
112.20(h)(6), 112 Appendix F Section 1.6	Automatic discharge detection/prevention systems are inspected/tested regularly (overfill alarms, secondary containment sensors)	√		
112 Appendix F Section 1.8.3	Discharge prevention meetings are held periodically (check last 5 years of records)	√		
Notes				
112.20(h)(8)(ii), 112.21, Appendix F Section 1.8.2	**H. Drills/Exercises**	**YES**	**NO**	**N/A**
112.21(c), 112 Appendix F Section 1.8.2	Facility drills/exercises program is based on National Preparedness for Response Exercise Program (PREP) Guidelines	√		
	- If NO, alternative program has been approved by the EPA RA.			√
	QI notification drills are performed (quarterly)			√
	Spill Management Team Tabletop Exercises are performed (annually)			√
	Facility Equipment Deployment Exercises are performed (semi-annually)			√
	Unannounced Exercises are performed (annually)			√
	Area Exercises are performed			√
Notes				
112.20(h)(9), 112 Appendix F Section 1.9	**I. Diagrams**	**YES**	**NO**	**N/A**
112 Appendix F Section 1.9(1)	Site plan diagram appears to accurately represent the facility	√		
112 Appendix F Section 1.9(2)	Drainage plan appears to accurately represent the facility	√		
Notes				

Field Notes	
Area	**Notes/Remarks**

Photo Documentation Log	
Photo Number	**Description (include date, location and direction)**
	See separate Photo Documentation Log

From: Stratton, Kimberly [KASTRATTON@eprod.com]
Sent: Friday, May 25, 2012 11:22 AM
To: Clonts, Michael; Don Smith Sr (smith.donaldp@epa.gov)
Cc: Fields, Jon; Wheaton, Rachel
Subject: FRP-06-TX-00625 EPA FRP_SPCC inspection

This email is in response to the U.S. Environmental Protection Agency (EPA) Oil Pollution Prevention Oil Pollution Prevention (40 CFR Part 112) inspection at the Enterprise Products Operating LLC (Enterprise), East Storage/Splitter III Facility located at 316 S. Main, Mont Belvieu, TX on March 15, 2012. Enterprise is submitting a revised FRP, which will follow in two subsequent emails. The FRP has been split into two sections due to the size constraints of the document. Please let me know if you do not receive them.

Kim Stratton
Senior Field Environmental Scientist
281-470-4939
832-262-9947 (cell)
kastratton@eprod.com

This message (including any attachments) is confidential and intended for a specific individual and purpose. If you are not the intended recipient, please notify the sender immediately and delete this message.

From: Clonts, Michael
Sent: Wednesday, April 18, 2012 10:14 AM
To: 'Fields, Jon'
Cc: 'smith.donaldp@epa.gov'
Subject: FRP-06-TX-00625 EPA FRP_SPCC inspection extension request

Jon,
Sorry for the delay. Don is out of town, but will be back tomorrow. I'll let you know ASAP.
Mike

From: Fields, Jon [mailto:JEFIELDS@eprod.com]
Sent: Tuesday, April 17, 2012 6:03 AM
To: Clonts, Michael
Cc: Stratton, Kimberly; 'smith.donaldp@epa.gov'; Fields, Jon
Subject: RE: FRP-06-TX-00625 EPA FRP_SPCC inspection results

Mike,

Enterprise has prepared a draft revision to the FRP-06-TX-00625 document and is currently arranging a meeting with stakeholders to conduct a formal review. Enterprise is requesting a 30-day extension to the initial due date to allow us to complete this review and finalize the document. If acceptable Enterprise will submit the revised FRP by May 27, 2012.

Thank you,

Jon E. Fields
Senior Manager, Environmental
Houston Region
(281) 385 - 4300 (Office)
(832) 596 - 7176 (Cell)

From: Clonts, Michael [mailto:M.Clonts@WestonSolutions.com]
Sent: Wednesday, March 28, 2012 7:00 PM
To: Ganter, Brenda
Cc: Fields, Jon; Stratton, Kimberly; 'smith.donaldp@epa.gov'
Subject: FRP-06-TX-00625 EPA FRP_SPCC inspection results

Dear Ms. Ganter:

On March 15, 2012, representatives of the U.S. Environmental Protection Agency (EPA) conducted an Oil Pollution Prevention (40 CFR Part 112) inspection at the Enterprise Products Operating LLC, East Storage/Splitter III Facility located at 316 S. Main, Mont Belvieu, TX. The inspection included a Facility Response Plan (FRP) review and Spill Prevention Control and Countermeasure (SPCC) Plan verification. Results of the compliance review and deficiencies noted are attached.

Please provide to this office, within 30 days of the date of this message, documentation, photographs, etc., as necessary to clearly demonstrate that the deficiencies have been corrected, or provide a firm schedule for achieving compliance with the oil pollution regulations. If no response is received within 30 days, potential enforcement actions may follow. Please provide your response to:

Don Smith, Sr. On Scene Coordinator
U. S. Environmental Protection Agency
(6SF-PO)
1445 Ross Avenue
Dallas, Texas 75202-2733

If you have any questions regarding this correspondence, please contact Don Smith at (214) 665-6489.

Mike Clonts
Senior Project Leader
Weston Solutions, Inc.
3900 Dallas Parkway, Ste. 175
Plano, TX 75093
469.666.5526 - direct
972.977.1689 - cell
M.Clonts@westonsolutions.com
http://www.westonsolutions.com

CONFIDENTIALITY: This email and attachments may contain information which is confidential and proprietary. Disclosure or use of any such confidential or proprietary information without the written permission of Weston Solutions, Inc. is strictly prohibited. If you received this email in error, please notify the sender by return e-mail and delete this email from your system. Thank you.

This message (including any attachments) is confidential and intended for a specific individual and purpose. If you are not the intended recipient, please notify the sender immediately and delete this message.

From: Stratton, Kimberly [KASTRATTON@eprod.com]
Sent: Friday, May 25, 2012 11:22 AM
To: Clonts, Michael; Don Smith Sr (smith.donaldp@epa.gov)
Cc: Fields, Jon; Wheaton, Rachel
Subject: FRP-06-TX-00625 EPA FRP_SPCC inspection

This email is in response to the U.S. Environmental Protection Agency (EPA) Oil Pollution Prevention Oil Pollution Prevention (40 CFR Part 112) inspection at the Enterprise Products Operating LLC (Enterprise), East Storage/Splitter III Facility located at 316 S. Main, Mont Belvieu, TX on March 15, 2012. Enterprise is submitting a revised FRP, which will follow in two subsequent emails. The FRP has been split into two sections due to the size constraints of the document. Please let me know if you do not receive them.

Kim Stratton
Senior Field Environmental Scientist
281-470-4939
832-262-9947 (cell)
kastratton@eprod.com

This message (including any attachments) is confidential and intended for a specific individual and purpose. If you are not the intended recipient, please notify the sender immediately and delete this message.

From: Clonts, Michael
Sent: Wednesday, March 28, 2012 7:00 PM
To: 'bganter@eprod.com'
Cc: 'jefields@eprod.com'; 'kastratton@eprod.com'; 'smith.donaldp@epa.gov'
Subject: FRP-06-TX-00625 EPA FRP SPCC inspection results
Attachments: FRP-06-TX-00625 FRP Field Checklist.pdf; FRP-06-TX-00625 FRP Review Checklist.pdf

Dear Ms. Ganter:

On March 15, 2012, representatives of the U.S. Environmental Protection Agency (EPA) conducted an Oil Pollution Prevention (40 CFR Part 112) inspection at the Enterprise Products Operating LLC, East Storage/Splitter III Facility located at 316 S. Main, Mont Belvieu, TX. The inspection included a Facility Response Plan (FRP) review and Spill Prevention Control and Countermeasure (SPCC) Plan verification. Results of the compliance review and deficiencies noted are attached.

Please provide to this office, within 30 days of the date of this message, documentation, photographs, etc., as necessary to clearly demonstrate that the deficiencies have been corrected, or provide a firm schedule for achieving compliance with the oil pollution regulations. If no response is received within 30 days, potential enforcement actions may follow. Please provide your response to:

Don Smith, Sr. On Scene Coordinator
U. S. Environmental Protection Agency
(6SF-PO)
1445 Ross Avenue
Dallas, Texas 75202-2733

If you have any questions regarding this correspondence, please contact Don Smith at (214) 665-6489.

Mike Clonts
Senior Project Leader
Weston Solutions, Inc.
3900 Dallas Parkway, Ste. 175
Plano, TX 75093
469.666.5526 - direct
972.977.1689 - cell
M.Clonts@westonsolutions.com
http://www.westonsolutions.com

Facility Response Plan Field Inspection Checklist

Activity Information	
Activity Type	FRP Field Inspection
Activity Date	3/15/2012
EPA Inspector	Don Smith

Facility Information								
Facility ID:	FRP Harm Category?	√	Substantial Harm					
		√	Significant & Substantial Harm					
FRP ID:	Complex?		Yes	√	No			
	If Complex, Shared Jurisdiction?		Yes		No	√	N/A	
Facility Name:	East Storage/Splitter III							
Address:	316 S. Main							
City:	Mont Belvieu							
State:	TX						Zip: 77580	
Owner/Operator:	Enterprise Products Operating LLC							
FRP Contact:	Jon Fields							
Telephone:	281-385-4300							
Email:	jefields@eprod.com							
QI:	Brenda Ganter							
Telephone:	281-385-0510							
Email:	bganter@eprod.com							
Notes/Comments: (Include County name)								

112.20(h), 112 Appendix F Section 1.0	A. General	YES	NO	N/A
112 Appendix F Section 1.0	Copy of FRP is available at the facility	√		
112.20(h)(1), 112 Appendix F Section 1.1	Copy of Emergency Response Action Plan is available at the facility.	√		
112.20(h)(1)(vi), 112.20(h)(3)(vii), 112 Appendix F Section 1.3.5	Evacuation plan is readily available.	√		

Describe how the facility incorporates the FRP into its overall training program:

Notes

112.20(h), 112 Appendix F Section 1.3.1	B. Spill Notification	YES	NO	N/A
112,20(h)(1)(ii), 112.20(h)(3)(iii), 112 Appendix F Section 1.3.1	Spill notification call-down list contains correct telephone numbers.	√		

112,20(h)(1)(ii), 112.20(h)(3)(iii), 112 Appendix F Section 1.3.1	Emergency contact information has been verified as current.	√		
Notes				
112.20(h)(4), 112 Appendix F Section 1.4	**C. Hazard Evaluation**	**YES**	**NO**	**N/A**
112 Appendix F Section 1.4.1	Facility total storage capacity corresponds to storage capacity reported in the plan	√		
112 Appendix F Section 1.4.1	Secondary containment is adequate for all aboveground tanks	√		
112 Appendix F Sections 1.4.2 and 1.4.3	Following factors affecting response efforts are properly addressed / characterized:			
	- Discharge volume		√	
	- Proximity to downgradient water		√	
	- Proximity to fish and wildlife and sensitive environments		√	
	- Proximity to drinking water intakes		√	
	- Likelihood that discharge will travel offsite		√	
	- Location of material spilled (i.e., on concrete pad or soil)		√	
	- Type of material discharged		√	
	- Weather or aquatic conditions anticipated during adverse conditions		√	
	- Available remediation equipment		√	
	- Probability of chain reaction or failures		√	
	- Direction of spill		√	
112 Appendix F Section 1.4.4	History of all reportable discharges at the facility is maintained with the FRP	√		
Notes: ***The Plan should describe the planning scenario, considering the reasonably expected circumstances of a discharge that would affect the response efforts required. This would include any circumstances the may have not been addressed in the Plan (see comment under Discharge Scenarios below).***				
112 Appendix F Section 1.5	**D. Discharge Scenarios**	**YES**	**NO**	**N/A**
112.20(h)(5)(i), 112 Appendix F Section 1.5.2	Worst-case discharge scenario described in Plan is accurate (e.g., source and impacts)		√	
112 Appendix F Section 1.5.1	Medium discharge scenario described in Plan is accurate (e.g., source and impacts)	√		
112 Appendix F Section 1.5.1	Small discharge scenario descr bed in Plan is accurate (e.g., source and impacts)	√		
Notes ***Please clarify the WCD volume in the event the automatic well shut-off fails, including how the wells will be controlled (manual?) and the volumetric difference from the calculation presented in the Plan.***				
112.20(h)(1) and (h)(3)(ix), 112 Appendix F Sections 1.3.6 and 1.6	**E. Response Personnel**	**YES**	**NO**	**N/A**
112.20(h)(1)(i), 112 Appendix F Section 1.2	Qualified Individual (QI) information (name, title, telephone numbers) is current	√		

112.20(h)(3)(ix), 112 Appendix F Section 1.3.6	QI is aware of, and prepared to fulfill, responsibilities:	√		
112.20(h)(3)(ix)(A), 112 Appendix F Section 1.3.6	- Activate internal alarms and hazard communication systems	√		
112.20(h)(3)(ix)(B), 112 Appendix F Section 1.3.6	- Notify response personnel	√		
112.20(h)(3)(ix)(C), 112 Appendix F Section 1.3.6	- Identify character, exact source, amount, and extent of the release	√		
112.20(h)(3)(ix)(D), 112 Appendix F Section 1.3.6	- Notify and provide information to appropriate Federal, State, and local authorities	√		
112.20(h)(3)(ix)(E), 112 Appendix F Section 1.3.6	- Assess interaction of substances with water and/or other substances stored at facility and notify on-scene response personnel of assessment	√		
112.20(h)(3)(ix)(F), 112 Appendix F Section 1.3.6	- Assess possible hazards to human health and the environment	√		
112.20(h)(3)(ix)(G), 112 Appendix F Section 1.3.6	- Assess and implement prompt removal actions	√		
112.20(h)(3)(ix)(H), 112 Appendix F Section 1.3.6	- Coordinate rescue and response actions	√		
112.20(h)(3)(ix)(I), 112 Appendix F Section 1.3.6	- Access company funding to initiate cleanup activities	√		
112.20(h)(3)(ix)(J), 112 Appendix F Section 1.3.6	- Direct cleanup activities	√		
112 Appendix F Section 1.2	QI has specific response training experience	√		
112 Appendix F Section 1.6	Facility personnel are familiar with procedures for detecting a discharge	√		
Notes				

112.20, 112 Appendices E and F	**F. Response Equipment**	**YES**	**NO**	**N/A**
112 Appendix E Section 3.0	Required response resources for a small discharge are provided.	√		
112 Appendix E Section 3.3.1	- 1,000 ft of boom and, if marine transfer facility, boom equal to twice the length of largest vessel	√		
112 Appendix E Section 3.3.1	- Capacity of deploying boom within 1 hour of small discharge	√		
112 Appendix E Section 3.3.2	- Response equipment capable of being deployed within 2 hours of a small discharge	√		
112 Appendix E Section 3.3.2	- Response equipment daily recovery capacity equal to the total volume of small discharge	√		

112 Appendix E Section 12.2	- Temporary storage capacity equal to twice the volume of the small discharge	√		
112 Appendix E Section 4.0	Required response resources for a medium discharge are provided:	√		
112 Appendix E Section 4.5	- Sufficient quantities of boom for containment and collection and for protection	√		
112 Appendix E Section 4.4	- Response equipment daily recovery capacity equal to 50% of total volume of small discharge	√		
112.20(h)(3)(ii), 112 Appendix F Section 1.3.4	Facility has current signed contract with response contractor and/or membership in cleanup co-op.	√		
	- If YES, facility has evidence of contractor's equipment deployment exercises (annually)	√		
112.20, 112 Appendix F	Facility has its own response equipment.	√		
112.20(h)(8)(i) and (ii), 112 Appendix F Section 1.3.3, 112 Appendix F Section 1.8.1.2	- If YES, facility response equipment is regularly inspected (check logs)	√		
112 Appendix F Section 1.3.2	Following equipment is provided and, if so, is operational, accessible, and has adequate capacity:	√		
112 Appendix F Section 1.3.2(1)	- Skimmers		√	
112 Appendix F Section 1.3.2(1)	- Pumps	√		
112 Appendix F Section 1.3.2(2)	- Containment booms	√		
112 Appendix F Section 1.3.2(5)	- Sorbents	√		
112 Appendix F Section 1.3.2(3)	- Chemical countermeasures			√
112 Appendix F Section 1.3.2(7)	- Communication equipment	√		
112 Appendix F Section 1.3.2(8)	- Firefighting equipment	√		
112 Appendix F Section 1.3.2(8)	- Personal protective equipment	√		
112 Appendix F Section 1.3.2(9)	- Other equipment, boots, motors, etc.	√		
112 Appendix F Section 1.7.2	Procedures have been established for recovering, reusing, decontaminating or disposing of materials	√		

Notes

The Plan indicates the facility does not maintain spill response equipment, and OSRO's will respond to a Worst Case Discharge. Enterprise maintains two response trailers containing equipment that may be utilized in the event of a discharge.

112 Appendix F Section 1.8.1	**G. Self Inspection**	**YES**	**NO**	**N/A**
112 Appendix F Section 1.8.1	Records of tank inspections are maintained (check last 5 years of records)	√		
	The following industry standard(s) are used to inspect aboveground bulk storage containers:	√		
	- Steel Tank Institute (STI) SP-1			√

	- American Petroleum Institute (API) Standard 653			√
	- Hybrid program developed by Professional Engineer			√
	- Other (specify in notes/comments section below)			√
112 Appendix F Section 1.8.1	Records of secondary containment inspections are maintained (check last 5 years of records)	√		
112.20(h)(6), 112 Appendix F Section 1.6	Automatic discharge detection/prevention systems are inspected/tested regularly (overfill alarms, secondary containment sensors)	√		
112 Appendix F Section 1.8.3	Discharge prevention meetings are held periodically (check last 5 years of records)	√		
Notes				
112.20(h)(8)(ii), 112.21, Appendix F Section 1.8.2	**H. Drills/Exercises**	**YES**	**NO**	**N/A**
112.21(c), 112 Appendix F Section 1.8.2	Facility drills/exercises program is based on National Preparedness for Response Exercise Program (PREP) Guidelines	√		
	- If NO, alternative program has been approved by the EPA RA.			√
	QI notification drills are performed (quarterly)			√
	Spill Management Team Tabletop Exercises are performed (annually)			√
	Facility Equipment Deployment Exercises are performed (semi-annually)			√
	Unannounced Exercises are performed (annually)			√
	Area Exercises are performed			√
Notes				
112.20(h)(9), 112 Appendix F Section 1.9	**I. Diagrams**	**YES**	**NO**	**N/A**
112 Appendix F Section 1.9(1)	Site plan diagram appears to accurately represent the facility	√		
112 Appendix F Section 1.9(2)	Drainage plan appears to accurately represent the facility	√		
Notes				

Field Notes	
Area	**Notes/Remarks**

Photo Documentation Log	
Photo Number	**Description (include date, location and direction)**
	See separate Photo Documentation Log

Facility Response Plan
Plan Review Checklist
For Verifying Compliance with Facility Response Plan Requirements

Activity Information		
Activity Type		FRP Plan Review
Reason for Review		Initial Plan Submittal (new FRP)
		5-year Review
		Plan Amendment (note type)
	√	Other (note other reason)
		Note: ***Pre-inspection review***
Activity Date		3/15/2012
EPA Inspector		***Mike Clonts***

112.20(h)(11)	**A. Response Plan Cover Sheet (sec. 2.0)**	YES	NO	N/A
	General Information (sec 2.1)			
	Facility name	√		
	Facility address	√		
	Facility telephone number	√		
	Mailing address (if different from facility address)	√		
	Facility owner/operator and address **(recommended)**	√		
	Facility owner telephone **(recommended)**	√		
	Dun & Bradstreet number	√		
	Longitude (degrees, minutes, seconds)	√		
	Latitude (degree, minutes, seconds)	√		
	North American Industrial Classification System (NAICS) code	√		
	Facility start up date **(recommended)**	√		
	Facility acres **(recommended)**	√		
	Name of protected waterway or environmentally sensitive area	√		
	Distance to navigable water	√		
	Worst case discharge amount (gallons)	√		
	Maximum oil storage capacity (gallons)	√		
	Largest aboveground storage tank (AST) capacity (gallons)	√		
	Total number of ASTs	√		
	Total number of underground storage tanks (USTs)			√
	Total UST storage			√
	Total storage of drums and transformers that contain oil			√
	Number of surface impoundments and total storage of surface impoundments			√
	Applicability of Substantial Harm Criteria (sec.2.2)			
	Attachment C-1 with answer to each applicability question	√		
	Documentation of reliability and analytical soundness of alternate formula			√
Please use the following space to note any missing or incomplete information.				
	Certification (sec. 2.3)			

	Plan holder certification is included (contains signature, title, and date)	√		
Please use the following space to note any missing or incomplete information.				
	Verification of Contract (sec. 2.4)			
	Plan holder certification is included (contains signature, title, and date)	√		
Please use the following space to note any missing or incomplete information. ***Review of the FRP was conducted in conjunction with the Enterprise, Emergency Preparedness Plan (Red Book)***				
112.20(h)(1)	**B. Emergency Response Action Plan (ERAP) (sec. 1.1)**	YES	NO	N/A
112.20(h)(1)	Separate Section of FRP	√		
112,20(h)(1)(i),	Qualified Individual (QI) Information (sec. 1.2)	√		
112,20(h)(1)(ii), 112.20(h)(3)(iii)	Emergency Notification List (sec. 1.3.1)	√		
	Spill Response Notification Form (sec. 1.3.1)	√		
112.20(h)(1)(iv)	Response Equipment List and Location (sec. 1.3.2)			√
112.20(h)(1)(iv)	Response Equipment Testing and Deployment (sec. 1.3.4)			√
112.20(h)(1)(v)	Facility Response Team List (sec. 1.3.4)		√	
112.20(h)(1)(vi)	Evacuation Plan (sec. 1.3.5)	√		
112.20(h)(1)(vii)	Immediate Actions (sec. 1.7.1)	√		
112.20(h)(1)(viii)	Facility Diagrams (sec. 1.9)	√		
	*The sections above should be extracted from the more detailed corresponding sections of the plan.			
Please use the following space to note any missing or incomplete information in the ERAP. ***See corresponding sections of this checklist for information on items marked "NO" above.***				
112.20(h)(2)	**C. Facility Information (sec. 1.2)**	YES	NO	N/A
	Facility name (sec. 1.2.1)	√		
	Street address	√		
	City, state, zip code	√		
	County	√		
	Phone number	√		
	Latitude/longitude (sec. 1.2.2)	√		
	Wellhead protection area (sec. 1.2.3)		√	
	Owner/operator (both names included, if different) (sec. 1.2.4)	√		
	QI Information (sec. 1.2.5)	√		
	-Name, position, street address, phone numbers	√		
	- Description of specific response training experience	√		
	Oil storage start-up date (sec. 1.2.6)	√		
	Facility operations description (sec. 1.2.7)	√		
	North American Industrial Classification System (NAICS) or Standard Industrial Classification code (SIC)	√		
	Dates and types of substantial expansion (sec. 1.2.8)			
Please use the following space to note any missing or incomplete information in Section 1.2 of the Plan and, to the extent possible, assess the accuracy of the information provided based on field inspection. ***The items checked "NO" above, are not addressed or inadequately addressed in the Plan. The Plan must be amended to include these items.***				
112.20(h)(1) and (3)	**D. Emergency Response Information (sec. 1.3)**	YES	NO	N/A
	Notification (sec. 1.3.1)			
	Emergency Notification Phone List		√	
	National Response Center phone number	√		

112.20(h)(1)(i)	QI (day and evening) phone numbers	√		
	Company response team (day and evening) phone numbers	√		
	Federal On-Scene Coordinator (OSC) and/or Regional Response Center (day and evening) phone numbers		√	
	Local response team phone numbers (fire department/cooperatives)	√		
	Fire marshal (day and evening) phone numbers	√		
	State emergency response phone number(s)	√		
	State Police phone number	√		
	State Emergency Response Commission (SERC) phone number	√		
	Local emergency planning committee (LEPC) phone number	√		
	Wastewater treatment facility(s) name and phone number (**recommended**)			√
	Local water supply system (day and evening) phone numbers	√		
	Weather report phone number	√		
	Local television/radio phone number(s) for evacuation notification	√		
112.20(h)(3)(i)	Spill response contractor(s)	√		
	Factories/Utilities with water intakes (**recommended**)	√		
	Trustees of sensitive areas (**recommended**)			√
	Hospital phone number	√		
	Spill Response Notification Form			
	Reporter's name, position and phone number	√		
	Company information	√		
	Incident description (source/cause)	√		
	Material (were materials discharged?)	√		
	Response action (meeting federal obligations to report, calling for responsible party, time called)	√		
	Impact	√		
	Date/time of incident, incident address/location, nearest cit,/state/count,/zi, code, distance from city/units of measure/direction from city, township, range, borough, container type/tank oil storage capacity	√		
	Units of measure, facility oil storage capacity/units of measure, facility longitude and latitude	√		
Please use the following space to note any missing or incomplete information in Section 1.3 of the Plan. Please use to assess the accuracy of the information provided based on field inspection. ***The EPA Region 6 telephone number listed in the plan is incorrect. It is more appropriate to list the EPA Region 6, 24 hour, hotline number of 1-866- 372-7745 (1-866-EPA-SPILL).***				
112.20(h)(1)(iv), 112.2	**Response Equipment (sec 1.3.2)**			
	Equipment Information			
	Equipment list	√		
	Equipment location	√		
	Release handling capabilities and limitations (e.g., launching sites)	√		
Please use the following space to note any missing or incomplete information. ***Page 5-1 of the Plan indicates the facility does not maintain spill response equipment, and OSRO's will respond to a Worst Case Discharge. Enterprise maintains two response trailers containing equipment that may be utilized in the event of a discharge. This equipment is listed in the Plan.***				
112.20(h)(3)(vi)	**E. Response Equipment List (Identify if Facility, OSRO, CO-OP owned by letters O, F, or C) (sec. 1.3.2)**	YES	NO	N/A
	Skimmers/pumps (operational status, type/model/year, number or quantity, capacity, daily effective recovery rate, storage location)	*O, F*		
	Boom (containment boom: operational status, year, number, skirt size)	*O, F*		
	Boom (sorbent boom: operational status, type/model/year, number, size (length))	*O, F*		

	Chemical countermeasure agents stored	O		
	Sorbents (type, year purchased, amount, storage location)	O, F		
	Hand tools (type, quantity, storage location)	O, F		
	Communications equipment (operational status, type and year, quantity, storage location)	O, F		
	Fire Fighting and Personnel Protective Equipment	O, F		
	Boats and Motors (operational status, type, and year, quantity, storage location)	O, F		
	Other (e.g., heavy equipment, cranes, dozers, etc.) (operational status, type and year, quantity, storage location)	O, F		
	Equipment Location	O, F		
	Amount of oil that emergency response equipment can handle and limitations (e.g., launching sites) must be descr bed.	O		
Please use the following space to note any missing or incomplete information.				
112.20(h)(8)(i) and (ii)	**F. Response Equipment Testing and Deployment Drill Log (sec. 1.3.3)**	YES	NO	N/A
	Date of last inspection or equipment test	√		
	Inspection Frequency	√		
	Date of Last Deployment	√		
	Deployment Frequency	√		
	OSRO Certification (Note: Facilities without facility owned response equipment must ensure that the Oil Spill Removal Organization that is identified in the response plan to provide this response equipment certifies that the deployment exercises have been met)	√		
Please use the following space to note any missing or incomplete information in Section 1.3.3 of the Plan and verify that the log information is up-to-date during the field inspection.				
	G. Personnel (sec. 1.3.4)	YES	NO	N/A
112.20(h)(3)(v), 112.20	**Emergency Response Personnel Information** (Personnel whose duties involve responding to emergencies, including oil discharges, even when they are not present at the site)			
	Response personnel name(s)		√	
	Facility response team title/position		√	
	Response personnel phone numbers (work/home, other)		√	
	Response personnel response time		√	
	Response personnel respons bility		√	
	Response personnel training (type and date)		√	
112.20(h)(3)(i)	**Emergency Response Contractor Information**		√	
	Response contractor name (s)	√		
	Response contractor phone numbers	√		
	Response contractor response time		√	
112.20(h)(3)(ii)	Response contractor evidence of contractual arrangements		√	
	Facility Response Team Information (Composed of Emergency Response Personnel and Emergency			
	Response team member name(s)		√	
	Response team member job function		√	
	Response team member response time		√	
	Response team member phone/pager number		√	

	Name of emergency response contractor (contractors providing facility response team services may be different than contractors providing oil spill response services)	√		
	- Response time	√		
	- Phone/pager		√	
Please use the following space to note any missing or incomplete information in Section 1.3.4 of the Plan. ***Appendix B of the FRP references the "Red Book" for the items checked "No" above. This information could not be found. The Plan must be amended to include these items.***				
112.20(h)(1)(vi), 112.20(h)(3)(vii)	**H. Evacuation Plans (sec. 1.3.5)**	YES	NO	N/A
	Facility Evacuation Plan (sec. 1.3.5.1)			
	Location of stored materials	√		
	Hazard imposed by spilled materials	√		
	Spill flow direction	√		
	Prevailing wind directions and speed	√		
	Water currents, tides, or wave conditions (if applicable)	√		
	Arrival route of emergency response personnel and response equipment	√		
	Evacuation routes	√		
	Alternative routes of evacuation	√		
	Transportation of injured personnel to nearest emergency medical facility	√		
	Location of alarm/notification systems	√		
	Centralized check-in area for roll call	√		
	Mitigation command center location	√		
	Location of shelter at facility	√		
112.20(h)(3)(vii), 112.20(h)(1)(vi)	Community Evacuation Plans referenced (sec. 1.3.5.3)	√		
Please use the following space to note any missing or incomplete information in Section 1.3.5 of the plan and to assess the accuracy of the information ¸ rovided based on field ins¸ ection.				
112.20(h)(3)(ix)	**I. Qualified Individual's Duties (sec. 1.3.6)**	YES	NO	N/A
112.20(h)(3)(ix)(A)	Activate internal alarms and hazard communication systems	√		
112.20(h)(3)(ix)(B)	Notify Response Personnel	√		
112.20(h)(3)(ix)(C)	Identify character, exact source, amount, and extent of the release	√		
112.20(h)(3)(ix)(D)	Notify and provide information to appropriate Federal, State and local authorities	√		
112.20(h)(3)(ix)(E)	Assess interaction of spilled substance with water and/or other substances stored at facility and notify on-scene response personnel of assessment	√		
112.20(h)(3)(ix)(F)	Assess possible hazards to human health and the environment	√		
112.20(h)(3)(ix)(G)	Assess and implement prompt removal actions		√	
112.20(h)(3)(ix)(H)	Coordinate rescue and response actions		√	
112.20(h)(3)(ix)(I)	Access company funding to initiate cleanup activities		√	
112.20(h)(3)(ix)(J)	Direct cleanup activities		√	
Please use the following space to note any missing or incomplete information. ***The items checked "NO" above, are not addressed or inadequately addressed in the Plan. The Plan must be amended to include these items.***				
112.20(h)(4)	**J. Hazard Evaluation (sec. 1.4)** *(See Section II, Appendix A)*	YES	NO	N/A
	Hazard Identification (sec. 1.4.1)			

	Tank Above Ground and Below Ground			
	Tanks (List Tanks by Number, Product and Shell Capacity in the space below)			
	Tank number(s)	√		
	Substance(s) stored	√		
	Quantity(s) stored	√		
	Tank type(s)/year(s) of construction	√		
	Shell capacity(s)	√		
	Failure(s)/cause(s)	√		
	Surface Impoundments (SI)			
	SI Number(s)			√
	Substance(s) Stored			√
	Quantity(s) Stored			√
	Surface area(s)/year(s) of construction			√
	Maximum capacity(s)			√
	Failure(s)/cause(s)			√
	Labeled schematic drawing	√		
	Description of transfers (loading and unloading) and volume of material	√		
	Description of daily operations	√		
	Secondary containment volume(s)	√		
	Normal daily throughput of the facility	√		
Please use the following space to note any missing or incomplete information in Section 1.4.1 of the plan and to assess the accuracy of the information in Section 1.4.1 of the plan and to assess the accuracy of the information based on field inspection. ***The facility maintains 6 (six) diesel AST's with a total capacity of 3,990 gallons plus Natural Gasoline and Diesel stored in Underground Caverns with a total capacity of 105,435,046 gallons.***				
112.20(h)(4)	**K. Vulnerability Analysis (sec. 1.4.2)** (See Appendix A - Calculation of the	YES	NO	N/A
	Analysis of potential effects of an oil spill on vulnerable areas. (Attachment C-III to Appendix C to this part provides a method that owners or operators shall use to determine appropriate distances from the facility to fish and wildlife and sensitive environments. Owners or operators can use a comparable formula that is considered acceptable by the Regional Administrator (RA). If a comparable formula is used, documentation of the reliability and analytical soundness of the formula must be attached to the Response Plan Cover Sheet.)			
	Water intakes (drinking, cooling or other)	√		
	Schools	√		
	Medical facilities	√		
	Residential areas	√		
	Businesses	√		
	Wetlands or other sensitive environments	√		
	Fish and wildlife	√		
	Lakes and streams	√		
	Endangered flora and fauna	√		
	Recreational areas	√		
	Transportation routes (air, land, and water)	√		
	Utilities	√		
	Other applicable areas of economic importance (list below)	√		

Please use the following space to note any missing or incomplete information in Section 1.4.2 of the plan and to assess the accuracy of the information based on field inspection.

112.20(h)(4)	**L. Analysis of the Potential for an Oil Spill (sec. 1.4.3)**	YES	NO	N/A
	Description of likelihood of release occurring	√		
	Oil spill history for the life of the facility	√		
	Horizontal range of potential spill	√		
	Vulnerability to natural disaster	√		
	Tank age	√		
	Other factors (e.g., unstable soils, earthquake zones, Karst topography, etc.)	√		

Please use the following space to note any missing or incomplete information in Section 1.4.3 of the Plan and to assess the accuracy of the information based on field inspection.

112.20(h)(4)	**M. Facility Reportable Oil Spill History Description (sec. 1.4.4)**	YES	NO	N/A
	Date of discharge(s)	√		
	List of discharge causes	√		
	Material(s) discharged	√		
	Amount of discharges (gallons)	√		
	Amount that reached navigable waters (if applicable)	√		
	Effectiveness and capacity of secondary containment	√		
	Clean-up actions taken	√		
	Steps taken to reduce possibility of reccurrence	√		
	Total oil storage capacity of tank(s) or impoundment(s) from which material discharged	√		
	Enforcement actions	√		
	Effectiveness of monitoring equipment	√		
	Description(s) of how each oil discharge was detected	√		

Please use the following space to note any missing or incomplete information in Sectio 1.4.4 of the Plan.

	N. Discharge Scenarios (sec. 1.5)	YES	NO	N/A
	Small Discharges (sec. 1.5.1) (Description of small discharges addressing facility operations and components including but not limited to (see. 1.5.1.1):			
	Loading and unloading operations			√
	Facility maintenance operation			√
	Facility piping	√		
	Pumping stations and sumps	√		
	Oil storage location			√
	Vehicle refueling operations			√
	Age and condition of facility components	√		
	Small volume discharge calculation for a facility	√		
	Facility-specific spill potential analysis		√	
	Average most probable discharge for complexes			√
	1,000 feet of boom (1 hour deployment time)	√		
	Correct amount of boom for complexes			√
	Oil recovery devices equal to small discharge (2 hour recovery time)	√		
	Oil storage capacity for recovered material	√		

	Scenarios Affected by the Response Efforts (sec. 1.5.1.2)			
	Size of the discharge	√		
	Proximity to downgradient wells, waterways, and drinking water intakes		√	
	Proximity to fish and wildlife and sensitive environments		√	
	Likelihood that the discharge will travel offsite (i.e., topography, drainage)	√		
	Location of the material discharged (i.e., on a concrete pad or directly on the soil)		√	
	Material discharged		√	
	Weather or aquatic conditions (i.e., river flow)		√	
	Available remediation equipment	√		
	Probability of a chain reaction of failures		√	
	Direction of discharge pathway	√		
	Medium Discharges (sec. 1.5.1) (Description of medium discharges scenarios addressing facility operations and components including but not limited to (sec. 1.5.1.1):			
	Loading and unloading operations			√
	Facility maintenance operation			√
	Facility piping	√		
	Pumping stations and sumps	√		
	Oil storage location			√
	Vehicle refueling operations			√
	Age and condition of facility components	√		
	Medium volume discharge calculation for a facility	√		
	Facility-specific spill potential analysis		√	
	Maximum most probably discharge for complexes			√
	Oil recovery devices equal to medium discharge	√		
	Availability of sufficient quantity of boom	√		
	Oil storage capacity for recovered material	√		
	Scenarios Affected by the Response Efforts (sec. 1.5.1.2)			
	Size of the discharge	√		
	Proximity to downgradient wells, waterways, and drinking water intakes		√	
	Proximity to fish and wildlife and sensitive environments		√	
	Likelihood that the discharge will travel offsite (i.e., topography, drainage)		√	
	Location of the material discharged (i.e., on a concrete pad or directly on the soil)		√	
	Material discharged		√	
	Weather or aquatic conditions (i.e., river flow)		√	
	Available remediation equipment	√		
	Probability of a chain reaction of failures		√	
	Direction of discharge pathway		√	
Please use the following space to note any missing or incomplete information in Section 1.5.1 of the Plan and to assess the accuracy of the information provided based on field inspection. ***The FRP Discharge Scenarios for small and medium releases were very limited in content, were not facility specific, and did not address the required components. The FRP checklist components marked "NO" above, were not addressed or inadequately addressed and require immediate correction.***				
112.20(h)(5)(i)	**O. Worst Case Discharge (sec. 1.5.2)** (See Appendix A) (When planning	YES	NO	N/A
	Facility Specific Worst Case Discharge Scenario		√	

	Description of worst case discharges scenarios addressing facility operations and components including but not limited to (sec. 1.5.1.1):			
	Loading and unloading operations			√
	Facility Maintenance Operation			√
	Facility Piping			√
	Pumping stations and sumps	√		
	Oil storage location			√
	Vehicle refueling operations			√
	Age and condition of facility components	√		
112 Appendix D	Correct Worst Case Discharge (WCD) calculation for specific type of facility	√		
	Correct WCD calculation for complexes			√
112 Appendix E	Sufficient response resources for WCD	√		
	Sources and quantity of equipment for response to WCD	√		
	Oil storage capacity for recovered material	√		
	Scenarios Affected by the Response Efforts (sec. 1.5.1.2)			
	Size of the discharge	√		
	Proximity to downgradient wells, waterways, and drinking water intakes		√	
	Proximity to fish and wildlife and sensitive environments	√		
	Likelihood that the discharge will travel offsite (i.e., topography, drainage)	√		
	Location of the material discharged (i.e., on a concrete pad or directly on the soil)	√		
	Material discharged		√	
	Weather or aquatic conditions (i.e., river flow)	√		
	Available remediation equipment	√		
	Probability of a chain reaction of failures		√	
	Direction of discharge pathway	√		

Please use the following space to note any missing or incomplete information in Section 1.5.2 of the Plan and to assess the accuracy of the information provided based on field inspection. ***The FRP Discharge Scenarios for a worst- case release was very limited in content and did not address the required components. The FRP checklist components marked "No" were not addressed or inadequately addressed and require immediate correction.***

112.20(h)(6)	**P. Discharge Detection Systems (sec. 1.6)**	YES	NO	N/A
	Discharge Detection by Personnel (sec. 1.6.1)			
	Description of procedures and personnel for spill detection	√		
	Description of facility inspections	√		
	Description of initial response actions	√		
	Emergency Response Information (referenced)	√		

Please use the following space to note any missing or incomplete information in Section 1.6.1 of the plan.

Section II, 112.7(e)(5)(iii)(D), 112.7(e)(5(iii), 112.7(e)(2)(viii), 112.7(e)(7)(v), Appendix A	**Automated Discharge Detection (sec. 1.6.2)**	√		
	Description of automatic spill detection equipment, including overfill alarms and secondary containment sensors	√		
	Description of alarm verification procedures and subsequent actions	√		

	Initial response actions	√		
Please use the following space to note any missing or incomplete information in Section 1.6.2 of the Plan.				
112.20(h)(7), Appendix E	**Q. Plan Implementation (sec. 1.7)**	YES	NO	N/A
	Identification of response resources for small, medium, and worst case spills (sec. 1.7.1)			
	Description of response actions	√		
	Accessibility of proper response personnel and equipment	√		
	Emergency plans for spill response	√		
	Additional response training	√		
	Additional contracted help	√		
	Access to additional response equipment/experts	√		
	Ability to implement plan, including response training and practice drills	√		
	Temporary storage	√		
	Recommended form detailing immediate action for small, medium and Worst Case spills (sec. 1.7.1.2A) (stop the product flow, warn personnel, shut off ignition sources, initiate containment, notify NRC, notify OSC, notify (as appropriate))	√		
Please use the following space to note any missing or incomplete information in Section 1.7.1 of the Plan.				
	Disposal Plan (sec. 1.7.2)			
	Description of procedures for recovering, reusing, decontaminating or disposing of materials	√		
	Materials addressed in Disposal Plan (recovered product, contaminated soil, contaminated equipment and materials (including drums tank parts, valves and shovels), personnel protective equipment, decontamination solutions, absorbents, spent chemicals))	√		
	Plan prepared in accordance with any federal, state, and/or local regulations	√		
	Plan addresses permits required to transport or dispose of recovered materials	√		
Please use the following space to note any missing or incomplete information in Section 1.7.2 of the Plan.				
Section II, 112.7(e)(1), 112.7(e)(7), Appendix A	**Containment and Drainage Planning (sec. 1.7.3)**			
	Description of containing/controlling a spill through drainage	√		
	Containment and drainage plan available			√
	Available volume of containment	√		
	Drainage route from oil storage and transfer areas			√
	Construction materials used in drainage troughs			√
	Type and number of valves and separators in drainage system			√
	Sump pump capacities			√
	Containment capacities of weirs and booms and their location			√
	Other cleanup materials			√
Please use the following space to note any missing and incomplete information in Section 1.7.3 of the Plan and to assess the accuracy of the information provided during field inspection.				

	R. Self-Inspection, Training, and Meeting Logs (sec. 1.8)	YES	NO	N/A
	Facility Self-Inspection (sec. 1.8.1)			

Section II, 112.7(e)(8)	Records of tank inspections with dates (tank leaks, tank foundations, tank Piping) contained or cross-referenced in Plan or maintained electronically for five years	√		
Section II, 112.7(e)(8)	Records of secondary containment inspections with dates (dike or berm system, secondary containment, retention and drainage ponds) contained or cross-referenced in Plan or maintained electronically for five years	√		
112.20(h)(8)(i)	Response equipment inspection			
	Response equipment checklist (sec. 1.8.1.2)	√		
	Equipment inventory (item and quantity)	√		
	Storage location (time to access and respond)	√		
	Accessibility (time to access and respond)	√		
	Operational status/condition	√		
	Actual use/testing (last test date and frequency of testing)	√		
	Shelf life (present age, expected replacement date)	√		
	- Inspection date	√		
	- Inspector's signature	√		
	- Inspection records maintained for 5 years	√		
	- Response equipment inspection log (inspector, date, comments)	√		
Please use the following space to note any missing or incomplete information in Section 1.8 of the Plan and to assess the accuracy of the information. ***Page 5-1 of the Plan indicates the facility does not maintain spill response equipment, and OSRO's will respond to a Worst Case Discharge. Enterprise maintains two response trailers containing equipment that may be utilized in the event of a discharge.***				
	Facility Drills/Exercises (sec. 1.8.2)			
	Description of drill/exercise program based on National Preparedness for Response Exercise Program (PREP) guidelines or other comparable program	√		
	- If "no" alternative program has been approved by EPA RA (describe program below)			√
	QI notification drill			√
	Spill management team tabletop exercise			√
	Equipment deployment exercise			√
	Unannounced exercise			√
	Area exercise			√
	Description of evaluation procedures for drill program			√
	Qualified Individual notification drill log (sec. 1.8.2.1)			
	Date, company, qualified individual, other contacted, emergency scenario, evaluation	√		
	Spill management team tabletop drill log (sec. 1.8.2.2)			
	Date, company, QI, participants, emergency scenario, evaluation, changes to be implemented, time table for implementation	√		
Please use the following space to note any missing or incomplete information in Section 1.8.2 of the Plan and to assess the accuracy of the information provided based on field inspection.				
	Response Training (sec. 1.8.3)			
	Description of response training program (including topics)	√		
	Personnel response training logs (name, response training date/and number of hours, prevention training date/and number of hours)	√		
	Discharge prevention meeting logs (date, attendees)	√		
Please use the following space to note any missing or incomplete information in Section 1.8.3 of the Plan and verify that the log information is up-to-date during the field inspection.				

	S. Diagrams (sec. 1.9)	YES	NO	N/A
	Site Plan Diagram			
	Entire facility to scale	√		
	Above and below-ground storage tanks	√		
	Contents and capacities of bulk oil storage tanks	√		
	Contents and capacities of drum storage areas			√
	Contents and capacities of surface impoundments			√
	Process buildings	√		
	Transfer areas	√		
	Location and capacity of secondary containment systems			√
	Location of hazardous materials	√		
	Location of communications and emergency response equipment			√
	Location of electrical equipment that might contain oil	√		
	If the facility is a complex facility, the interface between EPA and other regulating agencies			√
Please use the following space to note any missing or incomplete information in the Site Plan diagram and to assess the accuracy of the diagram based on field inspection.				
	Site Drainage Plan Diagram			
	Major sanitary and storm sewers, manholes, and drains	√		
	Weirs and shut-off valves			√
	Surface water receiving streams			√
	Fire fighting water sources	√		
	Other utilities			√
	Response personnel ingress and egress	√		
	Response equipment transportation routes	√		
	Direction of spill flow from discharge points	√		
Please use the following space to note any missing or incomplete information in the Site Drainage Plan diagram and to assess the accuracy of the diagram based on field inspection.				
	Site Evacuation Plan Diagram			
	Site plan diagram with evacuation routes	√		
	Location of evacuation regrouping areas	√		
Please use the following space to note any missing or incomplete information in the Site Evacuation Drainage Plan diagram and to assess the accuracy of the diagram based on field inspection.				

Section II, 112.7(e)(9)	T. Site Security (sec. 1.10)	YES	NO	N/A
	• Description of facility security	√		
	(Emergency cut-off locations, enclosures, guards and their duties, lighting, valve and pump locks, pipeline connection caps)	√		
Please use the following space to note any missing or incomplete information in Section 1.10 of the plan and to assess the accuracy of the information provided based on field inspection.				
Please use the following space to describe overall impressions of the facility response plan (i.e., functional, workable). A set of questions is provided in Appendix C to assist the inspector is assessing overall Plan adequacy.				
Reviewed by:	*Mike Clonts*			
Date:	*3/15/2012*			

From: Clonts, Michael
Sent: Monday, March 12, 2012 12:28 PM
To: 'bgantner@eprod.com'
Cc: 'smith.donaldp@epa.gov'
Subject: FRP-06-TX-00625 NOI letter
Attachments: FRP-06-TX-00625 Enterprise E Storage NOI.pdf

Brenda,

Attached is the letter I spoke of over the telephone this morning. If you have any questions, let me know. Or, you may contact Don Smith at the telephone number noted on the letter. Since it's short notice, disregard sending any Plan updates, etc. requested in the letter.

Thanks,

Mike Clonts
Senior Project Leader
Weston Solutions, Inc.
3900 Dallas Parkway, Ste. 175
Plano, TX 75093
469.666.5526 - direct
972.977.1689 - cell
M.Clonts@westonsolutions.com
http://www.westonsolutions.com

UNITED STATES ENVIRONMENTAL PROTECTION AGENCY

REGION 6
1445 ROSS AVENUE, SUITE 1200
DALLAS, TX 75202-2733

FRP-06-TX-00625

March 12, 2012

Brenda Gantner
Enterprise Products Operating LLC
316 S. Main
P. O. Box 573
Mont Belvieu, TX 77580-0537

NOTICE OF INSPECTION

Dear Mr. Gantner:

This is to inform you that an inspection will be conducted at the facility(ies) listed below. The purpose of the inspection is to determine your facility's compliance with both the Clean Water Act § 311(j)(CWA), as amended by the Oil Pollution Act of 1990 (OPA), and the Emergency Planning and Community Right To Know Act (EPCRA) of 1986.

Facility	Location	Date/Time of Inspection
East Storage/Splitter III	316 S. Main Mont Belvieu, TX	March 15, 2011 9:00 AM

Scope of the Inspection and Plan Review

The scope of the inspection and plan review process is to validate plan information and determine implementation of the aforementioned requirements. The inspection may include but is not limited to: reviewing and obtaining copies of documents and records; interviews and the taking of statements; review of manufacturing, importing, processing, storage, use, and/or treatment facilities; taking of samples and photographs, a drill/exercise and other inspection activities necessary to determine compliance with the Acts. Please ensure that key response personnel (i.e. Qualified Individual) are available during the inspection and have the following documents available on the date of the inspection: (1) Training Records, (2) Records of tank inspections, (3) Records of secondary containment inspections, (4) Response Equipment Checklists (5) Response Equipment Inspection Logs (6) Response Equipment Testing and Deployment Drill Logs (7) Qualified Individual Notification Drill Logs (8) Spill Management Team Tabletop Drill Logs, and (9) Discharge Prevention Meeting Logs.

Upon completion of the inspection process, your company personnel will be advised as to general compliance issues. Any deficiencies identified shall be addressed and corrected as directed by the EPA inspector. Your facility will have 30 days in which to address all deficiencies. Failure to make required revisions may affect your facility(ies)'s approval status and could result in potential enforcement action.

Please be advised that our inspection team's personal protective equipment (PPE) and inspection equipment generally consist of hard hats, safety gloves, steel-toed boots/shoes, coveralls where applicable, radios, pagers, monotox, GPS units and cameras. If Nomex fire retardant clothing is a necessity or if you have any specific safety related considerations regarding clothing or equipment, please provide notice to EPA prior to the inspection. Further, this document serves as notice that the EPA personnel and representatives have received OSHA training requirements in accordance with 29 CFR 1910.120.

To facilitate the completion and accuracy of the FRP/SPCC Compliance Inspection Report it is necessary for EPA to require that your organization submit, no later than two weeks prior to the inspection date, the following information: 1) latest copy of the Spill Prevention Control and Countermeasure Plan (SPCC), 2) EPCRA Tier II forms, and 3) the appropriate updates to your Facility Response Plan (FRP). Please be advised that this request will allow the Agency to leave a copy of the inspection report with the facility at the time of the inspection. Please submit the required documentation to the following address:

United States Environmental Protection Agency
Attn: Donald P. Smith
P.O. Box 303
Dallas, Texas 75313-0303

If you have any questions regarding this notice, please contact me at (214)665-6489.

Sincerely,

Donald P. Smith
Senior On-Scene Coordinator

From: Clonts, Michael
Sent: Tuesday, March 13, 2012 1:34 PM
To: 'bganter@eprod.com'
Cc: 'smith.donaldp@epa.gov'
Subject: FW: FRP-06-TX-00625 NOI letter
Attachments: FRP-06-TX-00625 Enterprise E Storage NOI.pdf

Brenda…sorry about that…I know your other facilities require Nomex…we will have that…let me know if there is anything else…Mike

---

From: Clonts, Michael
Sent: Monday, March 12, 2012 12:28 PM
To: 'bgantner@eprod.com'
Cc: 'smith.donaldp@epa.gov'
Subject: FRP-06-TX-00625 NOI letter

Brenda,

Attached is the letter I spoke of over the telephone this morning. If you have any questions, let me know. Or, you may contact Don Smith at the telephone number noted on the letter. Since it's short notice, disregard sending any Plan updates, etc. requested in the letter.

Thanks,

Mike Clonts
Senior Project Leader
Weston Solutions, Inc.
3900 Dallas Parkway, Ste. 175
Plano, TX 75093
469.666.5526 - direct
972.977.1689 - cell
M.Clonts@westonsolutions.com
http://www.westonsolutions.com

From: Clonts, Michael
Sent: Thursday, May 24, 2012 12:40 PM
To: Fields, Jon
Cc: Don Smith
Subject: Re: Enterprise Products FRP Submittal

Electronic, please

Sent from my iPhone

On May 24, 2012, at 10:57 AM, "Fields, Jon" <JEFIELDS@eprod.com> wrote:

> Mike,
>
> Can we submit the FRP electronically or do you prefer a hard copy?
>
> Thank
>
> Jon E. Fields
> Senior Manager, Environmental
> Houston Region
> (281) 385 - 4300 (Office)
> (832) 596 - 7176 (Cell)
>
> ---
>
> This message (including any attachments) is confidential and intended for a specific individual and purpose. If you are not the intended recipient, please notify the sender immediately and delete this message.

From: Fields, Jon [JEFIELDS@eprod.com]
Sent: Thursday, April 19, 2012 10:57 AM
To: Clonts, Michael
Cc: 'smith.donaldp@epa.gov'; Stratton, Kimberly
Subject: RE: FRP-06-TX-00625 EPA FRP_SPCC amendments extension request

Thank you!

Jon E. Fields
Senior Manager, Environmental
Houston Region
(281) 385 - 4300 (Office)
(832) 596 - 7176 (Cell)

From: Clonts, Michael [mailto:M.Clonts@WestonSolutions.com]
Sent: Thursday, April 19, 2012 10:56 AM
To: Fields, Jon
Cc: 'smith.donaldp@epa.gov'
Subject: FRP-06-TX-00625 EPA FRP_SPCC amendments extension request

Jon,
Don said your extension to May 27, 2012 will be fine.
Mike

From: Clonts, Michael
Sent: Wednesday, April 18, 2012 10:14 AM
To: 'Fields, Jon'
Cc: 'smith.donaldp@epa.gov'
Subject: FRP-06-TX-00625 EPA FRP_SPCC inspection extension request

Jon,
Sorry for the delay. Don is out of town, but will be back tomorrow. I'll let you know ASAP.
Mike

From: Fields, Jon [mailto:JEFIELDS@eprod.com]
Sent: Tuesday, April 17, 2012 6:03 AM
To: Clonts, Michael
Cc: Stratton, Kimberly; 'smith.donaldp@epa.gov'; Fields, Jon
Subject: RE: FRP-06-TX-00625 EPA FRP_SPCC inspection results

Mike,

Enterprise has prepared a draft revision to the FRP-06-TX-00625 document and is currently arranging a meeting with stakeholders to conduct a formal review. Enterprise is requesting a 30-day extension to the initial due date to allow us to complete this review and finalize the document. If acceptable Enterprise will submit the revised FRP by May 27, 2012.

Thank you,

Jon E. Fields
Senior Manager, Environmental
Houston Region
(281) 385 - 4300 (Office)
(832) 596 - 7176 (Cell)

From: Clonts, Michael [mailto:M.Clonts@WestonSolutions.com]
Sent: Wednesday, March 28, 2012 7:00 PM
To: Ganter, Brenda
Cc: Fields, Jon; Stratton, Kimberly; 'smith.donaldp@epa.gov'
Subject: FRP-06-TX-00625 EPA FRP_SPCC inspection results

Dear Ms. Ganter:

On March 15, 2012, representatives of the U.S. Environmental Protection Agency (EPA) conducted an Oil Pollution Prevention (40 CFR Part 112) inspection at the Enterprise Products Operating LLC, East Storage/Splitter III Facility located at 316 S. Main, Mont Belvieu, TX. The inspection included a Facility Response Plan (FRP) review and Spill Prevention Control and Countermeasure (SPCC) Plan verification. Results of the compliance review and deficiencies noted are attached.

Please provide to this office, within 30 days of the date of this message, documentation, photographs, etc., as necessary to clearly demonstrate that the deficiencies have been corrected, or provide a firm schedule for achieving compliance with the oil pollution regulations. If no response is received within 30 days, potential enforcement actions may follow. Please provide your response to:

Don Smith, Sr. On Scene Coordinator
U. S. Environmental Protection Agency
(6SF-PO)
1445 Ross Avenue
Dallas, Texas 75202-2733

If you have any questions regarding this correspondence, please contact Don Smith at (214) 665-6489.

Mike Clonts
Senior Project Leader
Weston Solutions, Inc.
3900 Dallas Parkway, Ste. 175
Plano, TX 75093
469.666.5526 - direct
972.977.1689 - cell
M.Clonts@westonsolutions.com
http://www.westonsolutions.com

CONFIDENTIALITY: This email and attachments may contain information which is confidential and proprietary. Disclosure or use of any such confidential or proprietary information without the written permission of Weston Solutions, Inc. is strictly prohibited. If you received this email in error, please notify the sender by return e-mail and delete this email from your system. Thank you.

This message (including any attachments) is confidential and intended for a specific individual and purpose. If you are not the intended recipient, please notify the sender immediately and delete this message.

Enterprise Products™

BRENDA D. GANTER
Manager, East and West Storage

10207 FM 1942
P O BOX 573
MONT BELVIEU, TX 77580-0573

281/385 0510
fax 281/576 5381
cell 281/797 0795
res 281/559 1713
bganter@eprod com

Enterprise Products

JON E. FIELDS
Senior Manager, Environmental

10207 FM 1942
P. O. BOX 573
HOUSTON, TX 77580

281/385.4300
fax 281/385.4532
cell 832/596.7176
jefields@eprod.com
EMERGENCY NUMBER
713/468.7437

Enterprise Products

KIMBERLY STRATTON
Senior Field Environmental Scientist

10207 FM 1942
P. O. BOX 573
MONT BELVIEU, TX 77580

281/385.4396
fax 281/385.4532
cell 832/262.9947
kastratton@eprod.com

FACILITY RESPONSE PLAN (FRP)

Prepared For
ENTERPRISE PRODUCTS OPERATING LLC
EAST STORAGE/SPLITTER III FACILITY
Mont Belvieu, Texas

Prepared By
THE WCM GROUP, INC.
Humble, Texas

May 2012

FACILITY RESPONSE PLAN (FRP)

Prepared For
ENTERPRISE PRODUCTS OPERATING LLC
EAST STORAGE/SPLITTER III FACILITY
Mont Belvieu, Texas

TABLE OF CONTENTS

USCG FORMAT (33 CFR Part 154)

RECORD OF CHANGES v
PLAN AVAILABILITY vi

33 CFR Part 154.1035(a) INTRODUCTION AND PLAN CONTENT 1
(1) Facility Name, Address, Telephone, FAX 1
(2) Location Description 1
(3) Owner Contact Procedures 1
(4) Table of Contents 1
(5) Cross-Index(ces) 2
(6) Record of Changes 2

33 CFR 154.1035(b) EMERGENCY RESPONSE ACTION PLAN 3
(1) Notification Procedures 3
(i) Prioritized Identification 3
(A) Facility Response Personnel, Contractors, Qualified Individual 3
(B) Federal, State, and Local Agencies 3
(ii) Agency Notification Checklist and Form 5
(2) Spill Mitigation Procedures 5
(i) Volume of Potential Discharges 6
(A) Average Most Probable Discharge 6
(B) Maximum Most Probable Discharge 6
(C) Worst-Case Discharge – MTR 6
(D) Worst-Case Discharge - NTR Portion of Facility 6
(ii) Prioritized Procedures to Mitigate or Prevent Discharge 6
(A) Failure of Manifold, Transfer Equipment, Hoses, and Loading Arm 6
(B) Tank Overfill 6
(C) Tank Failure 7
(D) Piping Rupture 7
(E) Piping Leak 7
(F) Explosion and/or Fire 7
(G) Equipment Failure 7
(iii) Equipment List and Personnel - Average Most Probable Discharge 8
(3) Facility's Response Activities 8
(i) Response Activities Prior to Arrival of the Qualified Individual 8
(ii) Qualified Individual's Authority and Responsibility 8
(iii) Organizational Structure 10
(A) Command and Control 10
(B) Public Information 10
(C) Safety 10
(D) Liaison with Government 10
(E) Spill Operations 10
(F) Planning 10

(G) Logistical Support 10
(H) Finance 10
(iv) Oil Spill Removal Organizations 10
(A) Equipment and Supplies 10
(B) Trained Personnel 11
(v) Spill Management Team Job Description 11
(vi) Resource Providers and Specific Resources (Dispersant) 12
(vii) Aerial Oil Tracking Capabilities 12
(viii) Oil Spill Removal Organization (One COTP Zone) 12
(ix) Oil Spill Removal Organization (More than one COTP Zone) 12
(4) Fish and Wildlife Sensitive Areas 12
(i) Discussion of Economically and Environmentally Sensitive Areas 12
(ii) Worst Case Discharge 12
(A) Potential Impact to Fish and Wildlife 12
(B) Sensitive Area Protection Plan 13
(i) Persistent Oils in Non-Tidal Environment, 48-Hr Projection 13
(ii) Persistent Oils in Tidal Environment, Fifteen Mile Projection 13
(iii) Non-Persistent Oils in Non-Tidal Environment, 24-Hr Projection 13
(iv) Non-Persistent Oils in Tidal Environment, Five Mile Projection 13
(B2) Spill Trajectory Model/Other Protected Areas 13
(5) Disposal Plan 14

HAZARD EVALUATION - Removed in USCG Final Rule, See EPA Appendix

DISCUSSION OF SPILL SCENARIOS - Removed in USCG Final Rule, See TGLO Appendix

33 CFR Part 154.1035(c) TRAINING AND DRILLS 14
(1) Training Procedures 14
(2) Exercise Procedures 15

33 CFR Part 154.1035(d) PLAN REVIEW AND UPDATE 17

33 CFR Part 154.1035(e) APPENDICES 18
(1) Facility-Specific Information 18
(i) Physical Description and Plan 18
(ii) Sizes, Types, and Numbers of Vessels 18
(iii) Valve Locations 18
(iv) MSDSs 18
(A) Generic or Chemical Name 18
(B) Appearance and Odor 18
(C) Physical and Chemical Characteristics 18
(D) Handling Hazards 18
(E) Fire Fighting Procedures 18

(v) Other Information 18
(2) List of Contacts 18
(i) Primary and Alternate Qualified Individuals 18
(iii) Federal, State, and Local Officials 18
(3) Equipment Lists and Records 19
(i) Equipment for Response to Average Most Probable Discharge 19
(ii) Oil Spill Removal Organization's Equipment for Worst Case Discharge 19
(iii) Equipment List Ad Specifics 19
(A) Make, Model, Year 19
(B) Effective Daily Recovery Rate 19
(C) Boom Height and Connector Type 19
(D) Scenario in Which Equipment Will Be Used 19
(E) Total Daily Storage and Disposal Capacity 19
(F) Equipment Storage Locations 19
(G) Date of Last Inspection 19
(4) Communications Plan 19
(5) Site-Specific Safety and Health Plan 20
(6) Acronyms and Definitions 20

APPENDICES

I - Alternate and Qualified Individual Letters of Agreement

II - OSRO Letters of Agreement and Inventory (if unclassified)

III - EPA APPENDICES (those applicable)

- EPA Appendix C Substantial Harm Facility Attachments
- EPA Appendix D Worst-Case Planning Volumes - Part A, Onshore Storage Facilities
- EPA Appendix E Required Resources and Attachments
- EPA Appendix F Model Plan - Cross Reference to This Format

IV - SPCC Plan (Separate Document)

V - Facility OSPRA Planning & Elements (Texas General Land Office)

VI - Historical Spill Information

VII - Facility Diagrams and Aerial Photos

VIII - Fish and Wildlife Sensitive Areas Information & Reference Maps

IX - Spill Management Team Structure (Incorporating ICS)

X - Blank Forms

XI - Completed Forms

XII - Agency Correspondence

XIII - Training Records

XIV - Applicable Regulations

XV - MSDSs

RECORD OF CHANGES

Use this form to record minor changes that do not result in re-printing and/or re-submission of the entire plan to regulatory agencies (changes in names, phone numbers, etc.)

Date	Change & Page #	Personnel

PLAN AVAILABILITY

Copies of the Facility Response Plan (FRP) are maintained at the following locations:

Location	Plan Holder	Document Number
East Storage Control Room	Dale Conn	1
East/West Storage Manager's Office	Zac Futerfas	2
Splitter III Control Room	Rick Iler	3
Propylene Fractionation Operations Manager	Kelly Tinsley	4
Environmental Office	Kim Stratton	5
Mont Belvieu Environmental Files	Rachel Wheaton	6
Corporate Environmental Files	Shiver Nolan	7
EPA – Region VI	EPA Region VI	8
The WCM Group, Inc.	The WCM Group, Inc.	9

33 CFR Part 154.1035 Specific Requirements for facilities that could reasonably be expected to cause substantial harm to the environment.

33 CFR Part 154.1035(a) INTRODUCTION AND PLAN CONTENT

(1) Facility Name, Address, Telephone, FAX

Company:	Enterprise Products Operating LLC
Site Name:	East Storage/Splitter III Facility
Street address:	316 S. Main Street, Mont Belvieu, Texas 77590
Mailing address:	P.O. Box 573, Mont Belvieu, Texas 77590
Phone (main):	281-385-4200
FAX (main):	281-576-2482

Enterprise Products Operating LLC (Enterprise) operates natural gas liquids facilities which include the subsurface salt formation hydrocarbon storage and/or fractionation of various gaseous and liquid petrochemical products such as ethane, propane, propylene, isobutane, normal butane, iso-octene/isooctane, MTBE and natural gasoline from hydrocarbon feedstock.

The East Storage/Splitter III facility is comprised of:

- East Storage operation is a "transportation related" and distribution operation subject to DOT Jurisdiction and Underground Injection Control Programs; and
- Splitter III operation, which produces propane and propylene

(2) Location Description

The Enterprise Products Operating LLC – East Storage/Splitter III facility is located at 316 S. Main Street, Mont Belvieu, Texas 77580. The latitude and longitude of the facility is 29 degrees, 50 minutes, 17.31 seconds N and 94 degrees, 53 minutes, 27.58 seconds W.

(3) 24-Hr Owner or Operator Contact Procedures

The facility is manned 24 hours a day, 7 days a week, 365 days a year. The facility may be contacted on a 24 hour basis by contacting the Qualified Individual, or the security office. Contact numbers are further elaborated within part (b) of this FRP.

(4) Table of Contents

A Table of Contents, using a modified United States Coast Guard (USCG) Final Rule format, is included at the beginning of this FRP. Modifications reflect other regulatory agency requirements.

(5) Cross-Index(ces)

A cross index to US Environmental Protection Agency (EPA) format is found in Appendix III.

(6) Record of Changes

A Record of Changes Sheet is located in the front section of this FRP.

33 CFR 154.1035 Specific Requirements for facilities that could reasonably be expected to cause substantial harm to the environment.

33 CFR 154.1035(b) EMERGENCY RESPONSE ACTION PLAN

(1) Notification Procedures

(i)(A) Facility Personnel, Contractors, Qualified Individual and Alternate

(i)(B) Federal, State, and Local Agencies

1. First Responder notifies QUALIFIED INDIVIDUAL(QI) or ALTERNATE QUALIFIED INDIVIDUAL (AQI):

NAME	OFFICE	24-HOUR
Zac Futerfas – Manager Storage (Qualified Individual)	281-385-0510	281-253-7393
Dale Conn, Operations Superintendent Storage/Pipelines/Terminals (Alternate Qualified Individual - AQI)	281-385-0210	281-793-2329

If neither of the individuals listed above is reachable, then the First Responder will act in the capacity of the Qualified Individual until relieved by an appropriate member of the Spill Management Team.

2. INDIVIDUAL contacted above will notify the following as well as additional members of the Spill Management Team as warranted by the incident (see Appendix IX):

NAME	OFFICE	24-HOUR
Kim Stratton, Senior Field Environmental Scientist	281-470-4939	832-262-9947
Security	East Handling Terminal or Control Room	281-385-0215 or 0217

3. A Spill Response Contractor will be called if needed.

Facility	Telephone	Services Provided	Most appropriate use:
1. Primary: Garner Environmental Services	281-930-1200 Toll Free: 800-424-1716	Full-scale spill response contractor (spill containment and collection equipment).	Product recovery, containment, and all phases of clean up.
2. Secondary: Anderson Pollution Control, Inc.	281-479-5300 24 Hr. 866-609-6208	Emergency Response, Oil Spill Control, Remediation of Soil and Groundwater, Industrial Services, etc.	Product recovery, containment, and all phases of clean up.

4. SPILL REPORTING will be completed – MANDATORY if these triggers are met:

Agency	Phone	Reporting Trigger:	Time Limit:	Who Reports:
Federal Response Agency)	**800-424-8802**	Discharge or threat of discharge to waterway.	1 HOUR	QI or his delegate
Texas Spill Reporting Hotline	**800-832-8224** ***Same # for both TCEQ (land spills) & TGLO (water spills).***	Spill confined to land: report if greater than 25 gallons. Spill in water or threatens water: any amount.	24 HOURS (land) 1 HOUR (water)	QI or his delegate

5. SPILL REPORTING – DISCRETIONARY / SITUATIONAL:

Agency	Phone	Reporting Trigger:	Time Limit:	Who Reports:
Marine Safety Office (MSO) Houston – Galveston	**713-671-5199**	The MSO will be notified by the National Response Center, but a direct call is also recommended, especially if the spill affects the Houston Ship Channel (HSC).	1 HOUR	QI or his delegate
Fire Department	**911**	Fire or threat of fire, depending on coordination with (and availability of) the internal Emergency Response Team (ERT).	ASAP	Any authorized employee
Police	**911**	Acts of vandalism, need for crowd control, spill in the public right-of-way.	ASAP	Any authorized employee
Region VI **Environmental Protection Agency**	**214-665-6444 (General Info.) 866-EPA-SPILL (Spill Alert) 866-372-7745**	Direct lines, may be contacted directly if necessary (are also notified by the National Response Center(NRC))	None imposed if NRC is called.	Emergency Health & Safety (EHS) Manager or delegate if instructed

6. SPILL RESPONSE INFORMATION ASSETS – Additional Resources

Entity	Contact	Appropriate Use:	Time Limit:	Who Can Call:
The WCM Group, Inc. www.wcmgroup.com	**281-446-7070**	❑ If the responsible person has regulatory procedural questions during an emergency. ❑ If on-site employees have regulatory questions and cannot reach the EHS.	Any time if needed.	Any authorized employee.

Entity	Contact	Appropriate Use:	Time Limit:	Who Can Call:
Weather Reports (Local)	http://www.srh.noaa.gov/forecast/MapClick.php?CityName=Deweyville&state=TX&site=LCH [1]	❑ May be accessed if there's a need to know if weather might affect spill response (e.g., incoming rain).	None imposed.	Any employee
Regional Highway Traffic	http://traffic.houstontranstar.org/layers	❑ The URL at right might be useful in the event of spill response resources arriving from in and around Houston.	None imposed.	Any designated employee with internet.
Oiled Wildlife Response Team (in the event that an off-site spill impacts a wildlife, especially waterfowl)	Sharon Schmalz League City, TX **281-332-8319** http://www.wrande.org/	❑ Alternate: Rhonda Murgatroyd 713-705-5897. ❑ These volunteers are endorsed by the Texas General Land Office.	None imposed.	Employees should check with supervisor.

33 CFR 154.1035 (b)(1)(ii) Agency Notification Checklist and Form

In the event of a spill, the Qualified Individual/Alternate (QI/AQI) will supply the agencies with the information listed on the reporting sheets contained in the BLANK FORMS supplemental appendix to this FRP (Appendix X). During training, employees will be made aware that it is not necessary to gather every piece of form-requested information before making initial contact with regulatory agencies. Additional information will be forwarded to all agencies as it is received.

33 CFR 154.1035 (b)(2) Spill Mitigation Procedures

The principal role of the facility is first response. First response actions, to be directed by the QI/AQI (or the Person In Charge (PIC) in his absence), will include stopping and containing a spill to the extent possible using on-site resources. If a spill is restricted to land, facility personnel will use sorbent materials from stockpiles in the warehouse to remedy the spill. Available hand tools or heavy equipment will be used to construct an earthen berm between the spill and water, if needed. The need for temporary on-site construction will depend on the characteristics and location of the spill). If a small spill reaches the water, facility personnel will use sorbent materials from the warehouse to remedy the spill and obtain the services of the primary Oil Spill Removal Organization (OSRO; Garner Environmental Services) to deploy spill boom. After initial containment is achieved, the facility will utilize one or more OSROs to remediate the discharge.

Dispersants will never be used during a spill response unless authorized by the appropriate state and federal regulators.

[1] Provision of external URLs is not intended as an endorsement.

33 CFR 154.1035 (b)(2)(i)(A) Volume of Average Most Probable Discharge

For discharge calculations, see Appendix III.

33 CFR 154.1035 (b)(2)(i)(B) Volume of Maximum Most Probable Discharge

For discharge calculations, see Appendix III.

33 CFR 154.1035 (b)(2)(i)(C) Volume of Worst-Case Discharge (Marine Transportation Related (MTR))

Marine Transportation related discharge is non-applicable.

33 CFR 154.1035(b)(2)(i)(D) Volume of Worst-Case Not Transportation Related (NTR) Discharge

For discharge calculations, see Appendix III.

33 CFR Part 154.1035(b)(2)(ii) Procedures to Mitigate or Prevent Discharge or Emergency

(A) Failure of Manifold, Transfer Equipment, Hoses, or Loading Arm

Failure of manifold, transfer equipment, hoses, or loading arm would most likely result in a spill of volume corresponding to the Average Most Probable or Maximum Most Probable discharges. Procedures to mitigate a spill in this size range would be similar to the WCD described above, although a smaller mobilization of personnel and equipment would likely be required.

(B) Tank Overfill

It is extremely unlikely that a spill to water will occur on account of a tank overfill both because of the automation of the transfer system, and because of the size of secondary containment. Instrumentation is tied into a DCS (distributed control system) that monitors tank levels and temperatures. If tank filling results in an unacceptably high-level state, this computerized system closes the loading valve. In addition, the DCS operator can see a graphical representation of the product level rising in the tank, and so has visual cues in addition to feedback from the operators.

Should the various components of this system fail and a tank be overfilled, discharge would initially enter secondary containment. It is not likely that secondary containment would be breached during a tank overfill event because the pumping would have to proceed for an inordinately long period of time for this to happen.

(C) Tank Failure

In the event of a tank failure, a worst-case discharge is anticipated. The bulk of the spill would probably be restricted to secondary containment, for but there could be considerable impact to navigable waters due to the sheer size of the larger tanks in the tank farm. If that containment structure breached and a portion of the spilled oil reaches water, facility response procedures would be initiated:

1. The Operator first on scene would radio his or her superior, who would in turn contact other operations personnel on shift and the QI/AQI.
2. The QI would immediately call the primary OSRO (Garner) and the security desk.
3. Regulatory agency notifications would be made.
4. Response would proceed upon arrival of the OSRO. The primary OSRO's main facility is located near the facility, so a fast arrival time would be anticipated.

See also the narrative in (b)(2)(i)(D) for further discussion of worst-case discharge.

(D) Piping Rupture
(E) Piping Leak

Response to a piping leak would proceed resemble response to a piping rupture to the extent that separate description is not warranted; the main difference would probably be in the volume of product discharged, with rupture releasing a larger amount. In both cases, response would depend very much on where the breach occurred. Spill remediation would take place within the boundaries of the facility. The line leak or breach would be isolated and repairs coordinated through the Operations Supervisor for the facility, and the OSRO would be called for clean-up.

(F) Explosion and/or Fire

Fire or the imminent threat of fire would prevent facility personnel from enacting spill containment procedures until the danger to personnel was minimized; human safety is always the primary concern. The facility does have considerable resources for fighting any fires that do occur. Enterprise maintains an emergency response team (ERT) capable of responding to a wide variety of internal emergencies. The primary OSRO (Garner) also has extensive competency in (and resources) for firefighting. If necessary, outside resources would be called.

(G) Equipment Failure

In the event of pumping system or relief valve failure leading to a discharge of oil, facility personnel will first manually close valves to isolate the damaged portion of the system. Repairs to the damaged equipment will be coordinated with the Operations Supervisor. Transfer operations will not resume until equipment is repaired and tested. The OSRO would be called for clean-up.

33 CFR Part 154.1035(b)(2)(iii) Equipment List and Personnel - Average Most Probable Discharge

For equipment list and personnel, see Appendix II.

33 CFR Part 154.1035(b)(3) Facility's Response Activities

(i) Response Activities Prior to Arrival of the Qualified Individual

Prior to the arrival of the Qualified Individual, the PIC will provide oversight for response activities. These activities will include the use of boom, sorbent materials or other response activities deemed appropriate (such as berm construction if part or all of the spill is retained on land). Personnel will be in radio and/or cellular telephone contact with the Qualified Individual and will advise him of response activities underway before his arrival.

(ii) Qualified Individual's Authority and Responsibility (incorporates 40 CFR 112.20(h))

The Qualified Individual (QI) is the Manager, East/West Storage (Mr. Zac Futerfas)

Home Address (info required by EPA)	**Mailing Address**
(b) (6) (b) (6)	PO Box 573 Mont Belvieu, TX 77580

The duties for which the QI is directly responsible (either directly or through the Spill Response Team, Appendix IX), include the following:

- QI must activate internal alarms and hazard communications systems to notify all facility personnel
- QI must identify the character, exact source, amount, and extent of release, as well as other items needed for notification of regulatory agencies
- QI must notify and provide necessary information to the appropriate Federal, State, and local authorities with designated response roles, including the National Response Center, State emergency response commission, and local planning committee
- QI must assess the interaction of the spilled substance with water and/or other substances and notify response personnel at the scene of that assessment
- QI must assess the possible hazards to human health and the environment due to the release. This assessment must consider both the direct and indirect effects of the release (i.e., the effects of any toxic, irritating, or asphyxiating gases that may be generated, or the effects of any hazardous surface water runoffs from water or chemical agents used to control fire and heat-induced explosion)
- QI must assess and implement prompt removal actions to contain and remove the substance released
- QI must coordinate rescue and response actions as previously arranged with response personnel
- QI must use authority to immediately access company funding to initiate cleanup activities

- QI must direct cleanup activities until properly relieved of this responsibility

The Alternate Qualified Individual (AQI) is Mr. Tim Jones. One or the other of these individuals is on call at all times. Both have cellular telephones, and reside within the area, such that they should be capable of arriving at the facility within one hour of notification. Copies of the designation for these individuals to serve as QI and AQI respectively are contained in Appendix I).

The QI has the authority to call out as many OSROs as he judges necessary. The primary OSRO, with which the facility has a response agreement, Garner Environmental Services. A copy of the agreement between the facility and this OSRO is contained in Appendix II).

The QI will serve as primary liaison with the Federal On-Scene Coordinator (FOSC), State On-Scene Coordinator (SOSC), and local emergency agency representatives (e.g., Local Emergency Planning Committee (LEPC)). If necessary, the QI will appoint other personnel to assist with this function (see Spill Management Team, Appendix IX; the Health, Safety & Environmental Director is knowledgeable about the regulatory framework, and could provide efficient regulatory agency interface).

In the early stages of spill response (e.g., within the first 24 hours), it is often necessary to arrange down-payments (e.g., mobilization charges) with responding OSROs. A response agreement has been prearranged with the primary OSRO (see Appendix II). The QI has the authority to directly obligate any additional facility funds needed for the purposes of an oil spill cleanup.

(iii) Organizational Structure

(A) - (H) Corporate Command, Public Information, Safety, Liaison, Operations, Planning, Logistical Support and Finance.

see Appendix (IX) for Spill Team structure that incorporates Incident Command System (ICS).

(iv) Oil Spill Removal Organizations

The primary OSRO is Garner Environmental Services. The facility intends to rely on this or another available qualified OSRO for the bulk of response and cleanup. If the primary OSRO is unavailable or additional resources are required, additional OSROs will be contacted. OSRO phone numbers are listed on the emergency contact sheet at the front of this FRP (b)(1).

OSRO Organization. The organization of OSROs generally varies from firm to firm, but the following titles and basic organizing principles are common:

OSRO base dispatch
- handles communication from the home offices/warehouses
- receives requests from the Field Commander for additional equipment
- dispatches additional equipment and personnel to the site as instructed

OSRO Field Commander:
- oversees response personnel
- responsible for his teams health and safety
- communicates with facility's QI regarding status of spill
- provides advice regarding continuing response actions

On-Water Responders
- Not applicable – no navigable body of water

On-Land Responders
- generally deployed in buddy teams
- physically remove oil from shorelines and affected areas
- for larger responses, teams will often have a separate supervisor

***33 CFR Part 154.1035*(b)(3)(iv)(A) Equipment and Supplies**

Equipment and supplies are discussed in the paragraph above are appropriate for use in this geographic location and climate. Adverse weather (excluding hurricanes) for the HSC would include wind of 30 m.p.h., air temperature of 40°F and wind-induced wave chop. In midwinter, morning fog could add to adverse conditions.

33 CFR Part 154.1035(b)(3)(iv)(B) Trained personnel

The role of facility personnel will largely be limited to that of first responder. Facility personnel are thoroughly trained in their day to day duties by several means. First, new employees are given general training, which includes emergency response training. New employees undergo an extensive period of extra supervision as they learn about the facility and their own duties and responsibilities. Most of the operators employed by this facility were previously employed by other petrochemical facilities, and have extensive job experience. Oil Pollutant Act (OPA) 90 training topics are discussed in section (c) of this FRP.

The majority of the spill response personnel will be supplied by Oil Spill Removal Organizations (OSROs), who maintain their own training programs. In accordance with the regulations, all OSROs are classified based on capacity to respond to oil spills. As part of this rating program, USCG ensures that commercial oil spill responders receive training pursuant to 29 CFR 1910.120.

***33 CFR Part 154.1035*(b)(3)(v)** Spill Management Team Job Descriptions

The Spill Management Team and Job description information is included in Appendix IX.

***33 CFR Part 154.1035*(b)(3)(vi)** For facilities that handle, store, or transport Group II through Group IV petroleum oils, and that operate in waters where dispersant use is pre-authorized, this subsection of the plan must also separately list the resource providers and specific resources, including appropriately trained dispersant-application personnel, necessary to provide the dispersant capabilities required in this subpart. All resource providers and resources must be available by contract or other approved means as described in §154.1028(a). The dispersant resources to be listed within this section must include the following:

> (A) Identification of each primary dispersant staging site to be used by each dispersant-application platform to meet the requirements of this subpart.
>
> (B) Identification of the platform type, resource-providing organization, location, and dispersant payload for each dispersant-application platform identified. Location data must identify the distance between the platform's home base and the identified primary dispersant staging site for this section.
>
> (C) For each unit of dispersant stockpile required to support the effective daily application capacity (EDAC) of each dispersant-application platform necessary to sustain each intended response tier of operation, identify the dispersant product resource provider, location, and volume. Location data must include the stockpile's distance to the primary staging sites where the stockpile would be loaded onto the corresponding platforms.
>
> (D) If an oil spill removal organization has been evaluated by the Coast Guard, and its capability is equal to or exceeds the response capability needed by the owner or operator, the section may identify only the oil spill removal organization,

and not the information required in paragraphs (b)(3)(vi)(A) through (b)(3)(vi)(C) of this section.

***33 CFR Part 154.1035*(b)(3)(vii)** This subsection of the plan must also separately list the resource providers and specific resources necessary to provide aerial oil tracking capabilities required in this subpart. The oil tracking resources to be listed within this section must include the following:

(A) The identification of a resource provider; and

(B) Type and location of aerial surveillance aircraft that are ensured available, through contract or other approved means, to meet the oil tracking requirements of §154.1045(j).

***33 CFR Part 154.1035*(b)(3)(viii)** For mobile facilities that operate in more than one Captain of the Port (COTP) zone, the plan must identify the oil spill removal organization and the spill management team in the applicable geographic-specific appendix. The oil spill removal organization(s) and the spill management team discussed in paragraph (b)(3)(iv) of this section must be included for each COTP zone in which the facility will handle, store, or transport oil in bulk.

***33 CFR Part 154.1035*(b)(3)(ix)** For mobile facilities that operate in more than one COTP zone, the plan must identify the oil spill removal organization and the spill management team in the applicable geographic-specific appendix. The oil spill removal organization(s) and the spill management team discussed in paragraph (b)(3)(iv)(A) of this section must be included for each COTP zone in which the facility will handle, store, or transport oil in bulk.

33 CFR Part 154.1035(b)(4) Fish and Wildlife Sensitive Areas

(i) Discussion of Economically and Environmentally Sensitive Areas

Coastal sensitivity information is summarized for quick reference in map and tabular form in Appendix VIII of this FRP. The facility, in conjunction with its consultant, uses the Texas Coastal Oil Spill Planning and Response Toolkit (2011 version, available in CD-ROM and also online at http://gisweb.glo.texas.gov/atlas/masterpage.pdf). See Appendix VIII for further information.

(ii) Worst Case Discharge

(A) All fish and wildlife and sensitive environments which are potentially impacted by a discharge of persistent oils, non-persistent oils, or non-petroleum oils are identified in Appendix VIII .

(B) Sensitive Areas Protective Actions

The facility's plan for protecting these sensitive areas in the event of a spill is as follows:

(1) A map of sensitive areas potentially impacted by a spill is provided in Appendix VII. The map includes response actions that the facility anticipates taking to protect these areas and a legend of activities.

(2) Identify the appropriate equipment and required personnel to protect all fish and wildlife and sensitive environments in the Area Contingency Plan (ACP) for the distances, as calculated in paragraph (b)(4)(iii)(B) of this section, that the persistent oils, non-persistent oils, or non-petroleum oils are likely to travel in the noted geographic area(s) and number of days listed in table 2 of Appendix C of this part.

(3) The appropriate equipment and required personnel to protect all fish and wildlife and sensitive environments are identified in Appendix VII and Appendix IX.

***33 CFR Part 154.1035*(b)(4)(iii)(B)(1)(i) Persistent Oils in Non-Tidal Environment, 48-Hr Projection**

This section is not applicable.

***33 CFR Part 154.1035*(b)(4)(iii)(B)(1)(ii) Persistent Oils in Tidal Environment, Fifteen Mile Projection**

This section is not applicable.

***33 CFR Part 154.1035*(b)(4)(iii)(B)(1)(iii) Non-Persistent Oils in Non-Tidal Environment, 24-Hr Projection**

This section is not applicable.

***33 CFR Part 154.1035*(b)(4)(iii)(B)(1)(iv) Non-Persistent Oils in Tidal Environment, Five Mile Projection**

This section is not applicable.

***33 CFR Part 154.1035*(b)(4)(iii)(B)(2) Spill Trajectory/Other Protected Areas**

Spill trajectory models are not readily available for this geographic area, and were not utilized for this assessment.

33 CFR Part 154.1035(b)(4)(iii)(B)(3) EPA Regulation for On-Shore Facilities

The procedures contained in the Environmental Protection's Agency's regulations on oil pollution prevention for NTR onshore facilities at 40 CFR part 112, Appendix C, Attachment C-III were not used for this plan.

33 CFR Part 154.1035(b)(5) Disposal Plan

See paragraph (b)(2)(i)(D) for description of disposal options and resources.

The OSRO will assist in meeting all applicable regulations regarding waste disposal, and waste disposal will be contracted to the OSRO as appropriate. Recycling of recovered materials will be used to the extent possible. The QI and AQI will assist with recycling arrangements if necessary.

33 CFR Part 154.1035(c) TRAINING AND DRILLS

(1) Training Procedures

Facility personnel are trained for spill preparedness during regular on-the-job training. Training procedures and programs for this plan meet the requirements outlined in 33 CFR 154.1050. This FRP manual itself can be utilized for training and refresher resource. The facility will not employ casual laborers or volunteers during spill response; human resources will be obtained as needed through the facility and/or an OSRO. The primary OSRO will assure that its employees have met the training requirements of 29 CFR 1910.120 and recordkeeping requirements of 33 CFR 154.1050.

The facility will keep records of personnel training and will make those records available to the Coast Guard upon request. Training records for facility personnel, including those for the Qualified Individual, will be maintained by the facility for a period of **three years**. In addition, the facility will keep records of employees' work experience relevant to their operational duties.

The content of the training program and applicable records are stored in Appendix XIII.

(2) Exercise Procedures

This section provides a description of the exercise program carried out at the facility as described in Section 154.1055 Exercises. The following Preparedness for Response Exercise Program (PREP) drill schedule will be observed. The facility is not a coastal facility; therefore, the schedule is adjusted as follows:

Type of Drill	Schedule
Notification drills, facility personnel and Qualified Individual [154.1055(a)(1)]	Quarterly
Equipment deployment drills[154.1055(a)(3)]	N/A
Spill management team tabletop drills [154.1055(a)(2)]	Annually
Unannounced drill [154.1055(a)(5)]	Every 3 years
Exercise of entire FRP [154.1055(e)]	Every 3 years
COTP drills [154.1055(b)]	N/A

Note: At least one drill in the table will be unannounced annually [33 CFR 154.1055(a)(5)]

The Preparedness for Response Exercise Program (PREP) guidelines will be observed for the execution of these drills. The details are contained in the PREP manual[2] and are not repeated here. Drill records will be retained for at least three years after the drills have taken place [154.1055(d)].

For reference, the following section summarizes the FIFTEEN CORE COMPONENTS of the PREP. (PREP drill logs request to know which elements were exercised during any particular drill):

1. NOTIFICATIONS: Test notification procedures identified in the Area Contingency Plan and the associated Responsible Party Response Plan.

2. STAFF MOBILIZATION: Demonstrate the ability to assemble the spill response organization identified in the Area Contingency Plan and associated RP Response Plan.

3. ABILITY TO OPERATE WITHIN THE RESPONSE MANAGEMENT SYSTEM DESCRIBED IN THE PLAN: This includes working under the unified command system and the response management system described in the plans.

4. DISCHARGE CONTROL: Demonstrate the ability of the spill response organization to control and stop the discharge at the source.

5. ASSESSMENT: Demonstrate the ability of the spill response organization to provide an initial assessment of the discharge and to provide continuing assessments of the effectiveness of the tactical operations.

[2] The manual is available here: http://www.uscg.mil/hq/g-m/nmc/response/msprep.pdf

6. CONTAINMENT: Demonstrate the ability of the spill response organization to contain the discharge at the source or in various locations for recovery operations.

7. RECOVERY: Demonstrate the ability of the spill response organization to recover the discharged product.

8. PROTECTION: Demonstrate the ability of the spill response organization to protect the environmentally and economic sensitive sites identified in the Area Contingency Plan and the respective industry response plan.

9. DISPOSAL: Demonstrate the ability of the spill response organization to dispose of the recovered materials and contaminated debris.

10. COMMUNICATIONS: Demonstrate the ability to establish an effective communications system for the spill response organization.

11. TRANSPORTATION: Demonstrate the ability to provide effective multi-mode transportation for both execution of the discharge response and for support functions.

12. PERSONNEL SUPPORT: Demonstrate the ability to provide necessary support of all personnel associated with the response.

13. EQUIPMENT MAINTENANCE AND SUPPORT: Demonstrate the ability to maintain and support all equipment associated with the response

14. PROCUREMENT: Demonstrate the ability to establish an effective procurement system.

15. DOCUMENTATION: Demonstrate the ability of the spill response organization to document all operation and support aspects of the resource and provide detailed records of decisions and actions taken.

NOTE: This summary provides general information only and does not go into detail regarding each component.

33 CFR Part 154.1035(d) PLAN REVIEW & UPDATE

The FRP will be reviewed annually and the review will incorporate any revisions to the plan, including listings of fish and wildlife sensitive environments identified in the Area Contingency Plan (ACP) in effect 6 months prior to plan review [33 CFR 154.1065(a)].

A copy of any revisions made will be submitted to EPA – Region VI, along with a cover letter explaining the changes. If no revisions are necessary, a notation will be provided in the Record of Changes section at a minimum. Appendix X (Blank Forms) contains a form that may be used for recording plan reviews and changes [33 CFR 154.1065(a)(2)(i),(ii)].

In the event of material changes in the facility configuration, types of oil handled, identity of the OSRO(s), emergency response procedures, or facility operating area, this FRP will be updated, and an explanation of the changes submitted to the EPA – Region VI within 30 days of the changes occurring [33 CFR 154.1065(b)(1-6)].

33 CFR Part 154.1035(e) APPENDICES

There are several appendices to this plan. These paragraphs describes the appendices required by 33 CFR 154.1035(e)

33 CFR Part 154.1035(e)(1) Facility-Specific Information

(i) Physical Description and Plan

A plan of the facility is included in Appendix VII. Transfer locations, locations of safety equipment, and control stations are marked on facility diagrams and maps in Appendix VII.

(ii) Sizes, Types, and Numbers of Vessels

This section is not applicable.

(iii) Valve Locations

Pump stations, valves, and control locations are shown on general maps as well as process and instrumentation diagrams maintained by the facility with copies of select diagrams provided in Appendix VII.

(iv) Material Safety Data Sheets (MSDSs) (including subparts A-E)

The facility maintains MSDS for all products routinely handled at the facility as of the date of this FRP. Facility operators are familiar with the properties and potential hazards associated with these products. MSDS Sheets are provided in Appendix XV for all products currently handled.

(v) Other Information

This section is not applicable to this plan.

33 CFR Part 154.1035(e)(2) List of Contacts

(i) Primary and Alternate Qualified Individuals

The list of Primary and Alternate Qualified Individuals is provided in Section 33 CFR 154.1035(b)(1) [Page 3] of this plan.

(ii) Contacts for Activation of Response Resources

Contacts are provided in Section 33 CFR 154.1035(b)(1) [Pages 3 and 4] of this plan.

(iii) Federal, State, and Local Officials

Federal State and Local offices are provided in section 33 CFR 154.1035(b)(1) [Page 4] of this plan.

33 CFR Part 154.1035(e)(3) Equipment Lists and Records

(i) Equipment for Response to Average Most Probable Discharge

An MTR Average Most Probable discharge, being of relatively small volume, would likely require a minimum of hardware and personnel resources. Response equipment would consist of miscellaneous tools, and sorbent materials as needed. The OSRO would be called and would supply containment boom and additional personnel and equipment, if needed.

(ii) Oil Spill Removal Organization's Equipment for Worst Case Discharge

The primary OSRO has been certified, and maintains sufficient resources to respond to a worst-case discharge. A list of equipment is included in Appendix II. Alternate OSROs are listed in Appendix II.

(iii) Equipment List and Specifics (including subparts A-H)

The primary OSRO has been classified by the USCG, so their equipment is not detailed in this FRP. OSRO contracts are contained in Appendix II. Appendix II includes equipment belonging to the OSRO which would be sufficient to mitigate a Worst-Case Discharge as it is defined in this FRP.

33 CFR Part 154.1035(e)(4) Communications Plan

Two-way radios which meet Class 1, Division 1, Group D requirements as defined in 46 CFR 110.83 as they are approved by Underwriter's Laboratories or Factory Mutual to be intrinsically safe for use in all hazardous environments will be used.

Internet conductivity is available in the offices and control room. The main FAX machine is also present in the office building, which would serve as the command center for a large spill incident.

The facility has established the following communications protocols:

- Notifications of on-site personnel are to be made using direct voice contact and by using the portable radios described above. This system is used extensively during daily operations so personnel are familiar with it.

- Notifications of off-site personnel will be made with the telephone and in accordance with the Chain-Of-Command presented in this report [section (b)(1)]. The facility has a designated on-call protocol for non-business-hours response to any problems. Government response agencies will also be contacted by telephone. As mentioned above, communications equipment includes on-site FAX and Internet, ensuring efficient information transfer.

- Notifications of neighboring or co-located facilities, if necessary, will be made by the QI, using the telephone or radio.

- Upon arrival of the OSRO at the facility, the facility office will be used as the command and communications center. The OSRO will have its own communications protocol.

33 CFR Part 154.1035(e)(5) Site-Specific Safety and Health Plan

The facility has developed Standard Operating Procedures (SOPs) and a site-specific Health and Safety Plan (HASP) to address its operations. The facility may supplement its own operator work force with responders from other Enterprise facilities in the area such as Mont Belvieu, Pasadena, OTTI, etc.

The OSROs maintain independent health and safety plans.

33 CFR Part 154.1035(e)(6) Acronyms

ACP	Area Contingency Plan
AQI	Alternate Qualified Individual
AST	Aboveground Storage Tank
bbl(s)	barrels(s); one barrel equals 42 gallons
BOA	Basic Ordering Agreement
CGOM	U.S. Coast Guard Operations Manual (33 CFR 154).
CHRIS	Chemical Hazards Response Information System
COTP	Captain of the Port
DCO	Discharge Cleanup Organization (as defined by the TX General Land Office)
DCS	Distributed Control System
DEQ	Louisiana Department of Environmental Quality
DNR	Louisiana Department of Natural Resources
EDAC	Effective Daily Application Capacity
EPA	Environmental Protection Agency
ERAP	Emergency Response Action Plan
ERT	Emergency Response Team
ESD	Emergency Shutdown Devices
FOSC	Federal On-Scene Coordinator
FRP	Facility Response Plan
gal(s)	gallon(s)
GLO	Texas General Land Office
HASP	Health and Safety Plan
HSC	Houston Ship Channel
ICS	Incident Command System
ICWW	Intracoastal Waterway
LCP	Local Contingency Plan
LEPC	Local Emergency Planning Committee
MOU	Memorandum of Understanding
MSDS	Material Safety Data Sheet
MSO	Marine Safety Office

MTR	Marine Transportation Related
NCDC	National Climatic Data Center
NCP	National Contingency Plan
NRC	National Response Center
NTR	Not Transportation Related
OPA 90	Oil Pollution Act of 1990
OSPRA	Texas Oil Spill Prevention and Response Act
OSRO	Oil Spill Removal Organization (as defined by the USCG)
PIC	Person In Charge
PREP	Preparedness for Response Exercise Program
QI	Qualified Individual
RRC	Railroad Commission (Texas)
SERC	State Emergency Response Committee
SIC	Standard Industrial Classification
SOP	Standard Operating Procedures
SOSC	State On-Scene Coordinator
SPCC	Spill Prevention, Control, and Countermeasures Manual (Separate Document)
TGLO	Texas General Land Office
USCG	United States Coast Guard
VRP	Vessel Response Plan
WCD	Worse Case Discharge

APPENDIX I

ALTERNATE AND QUALIFIED INDIVIDUAL LETTERS OF AGREEMENT

Alternate and Qualified Individual Letters of Agreement

This appendix contains the following:

☒ Document designating the referenced individuals.

❑ Other: _____

❑ Other: _____

Date of Manual Entries into this Appendix	***Comments and/or Content***

❑ If excess material from this Appendix is kept in a file instead of behind this tab, please complete the following:

Name of file: _____
Storage location: _____
Dates covered: _____
Contents: _____

Facility Response Plan
Designation of Qualified Individual/Alternate Qualified Individual

As required by 33 CFR 154.1026(a) Zac Futerfas or Dale Conn

is herby designated as the Qualified Individual (QI)/Alternate Qualified Individual (AQI) for the Enterprise Products Operating LLC Pasadena Facility Response Plan.

The QI designated herein is:

- Available on a 24-hour basis;
- Located in the United States;
- Able to arrive at the facility in a reasonable time;
- Speaks fluent English; and is,
- Trained in the responsibilities of the QI/AQI.

As QI/AQI; Zac Futerfas or Dale Conn is authorized to:

1. Activate and engage in contracting with oil spill removal organizations;
2. Act as liaison with pre-designated on-scene coordinator;
3. Obligated funds required to carry out responsibilities

Signatures:

Qualified Individual/Alternate Qualified Individual

Zac Futerfas
Printed Name

Signature

Manager, Storage
Title

5/24/12
Date

Enterprise Products Operating LLC

Dale Conn
Printed Name

Signature

Supervisor, Storage
Title

5/24/12
Date

APPENDIX II

OSRO LETTERS OF AGREEMENT AND INVENTORY

This appendix contains the following:

☒ Copy of the Garner Environmental Services (Primary) and Anderson Pollution Control, Inc. (Secondary) contracts.

❑ Other: _____

❑ Other: _____

Date of Manual Entries into this Appendix	***Comments and/or Content***

❑ If excess material from this Appendix is kept in a file instead of behind this tab, please complete the following:

Name of file: _____
Storage location: _____
Dates covered: _____
Contents: _____

WORK CONTRACT NO. 2028
ORIGINATOR ALVARO PARRA
(Type/Print Department and Location)

ENTERPRISE PRODUCTS OPERATING L.P.

SERVICE AGREEMENT (Rev. 08/98)

THIS CONTRACT is entered into this 15th day of March, 2004, in the City of Houston, Harris County, Texas, between ENTERPRISE PRODUCTS OPERATING L.P., a Delaware limited partnership, P. O. Box 4324, Houston, Texas 77210-4324 ("Company"), and:

GARNER ENVIRONMENTAL SERVICES, INC.
(Full Legal Name)

a Texas Corporation
(State) (Corporation, Partnership or Sole Proprietorship)

1717 West 13th Street
(Address)

Deer Park, Texas 77536 ("Contractor").
(City) (State) (Zip)

IN CONSIDERATION of the mutual promises in this Contract and other good and valuable consideration, the parties agree as follows:

I. APPROVED CONTRACTOR LIST Upon execution of this Contract by Contractor and Company, Contractor shall be included on Company's Approved Contractor List, indicating Contractor's eligibility to perform Work for Company; and Company and Contractor agree that this Contract shall remain in force until terminated as provided by its terms.

II. DEFINITIONS "Contract" and "Agreement" mean this Contract and any subsequent oral or written Work order or agreement (together with any drawings, specifications or other exhibits attached to it) between the parties for Work. "Work" means all labor, goods, materials and services required to be performed and furnished by Contractor under any Agreement.

III. PERFORMANCE Contractor represents and warrants that all Work shall be in strict accordance with and subject to all Contract terms and conditions, that it has adequate equipment in good working order and fully trained personnel capable of efficiently operating such equipment or performing any services provided under any Agreement, and that all Work shall be performed in a good and workmanlike manner, satisfactory and acceptable to Company. Contractor represents and warrants that it shall be able to fulfill all of its obligations under any Agreement with no degradation in performance due to the calendar change from 1999 to 2000 and beyond January 1, 2000.

IV. INDEPENDENT CONTRACTOR Contractor is and shall be an independent contractor with respect to Work, and neither Contractor nor its employees or subcontractors or their employees shall be deemed, for any purpose, to be the employee, agent, servant, or representative of Company in the performance of Work. Company shall have no direction or control of the Contractor or its employees and agents except in the results to be obtained. Work shall conform with all applicable specifications and meet the approval of Company and shall be subject to the general right of inspection by or for Company. The actual performance and superintendence of Work shall be by Contractor, but Company or its representative shall have unlimited access to Contractor's operations to determine whether Work is being performed by Contractor in accordance with the Contract.

V. EMPLOYMENT CONTRIBUTIONS AND BENEFITS Contractor agrees to accept full and exclusive liability for the payment of and to pay when due any and all premiums, contributions and taxes for Workers= Compensation Insurance and Unemployment Insurance and for old age pensions, annuities and other retirement benefits imposed by or pursuant to Federal or State law and measured by the wages, salaries or other remuneration paid to persons employed by Contractor; and Contractor further agrees to indemnify and hold Company harmless against any liability for any such premiums, taxes or contributions which may be assessed against Company with respect to Contractor, its employees or subcontractors.

VI. TAXES AND FEES ***All domestic federal, state and municipal taxes, except income taxes and ad-valorem taxes, now and hereinafter imposed with respect to services rendered, to rental equipment, to the processing, manufacture, repair, and to the delivery and transportation of equipment and supplies will be added to and become part of the total price payable by the Company. If Company claims an exemption from payment of Texas Sales and Use Tax, Company will be required to render an Exemption Certificate or a Resale Certificate to Garner Environmental Services, Inc. for said exemption to apply to the services rendered. If for any reason the services rendered result in the assessment of foreign income taxes, excise taxes, or other fees alleged as owing to a foreign state or government, Company will pay directly the amount of any assessment or fee. In the event Contractor pays any such foreign tax or fee directly, Company will promptly reimburse Contractor for same.***

VII. LABOR AND MATERIAL Contractor shall pay all claims for labor and material related to the Work and shall not permit any liens of any kind to be fixed against the property of Company or the property of others arising out of claims of Contractor, its employees, mechanics, materialmen, or subcontractors; and upon the completion of the Work, Contractor shall furnish Company with evidence satisfactory to Company of the payment of all such claims. Contractor shall indemnify and hold harmless Company from and against all such claims or liens; and Contractor agrees, that, without waiver of any other rights or remedies available to Company, any sums due to Contractor from Company may be withheld and applied by Company toward the discharge or payment of any such claims or liens.

VIII. PAYMENT FOR WORK Payment for Work shall be as provided in Exhibit II or as provided in any Agreement. Payment for Work performed on a reimbursable-cost basis shall be made by Company to Contractor in accordance with Contractor's then-current rate schedule; Contractor shall furnish Company its rate schedule prior to commencing any such Work and notify Company in writing of any changes in the rate schedule. Neither payment for nor use of Work in whole or in part by Company shall constitute acceptance of any Work or materials which do not conform to Contract terms and specifications or settlement of any unsettled claims, liabilities, duties, liens or other encumbrances. Contractor shall keep accurate books and records of all Work, and, within two (2) years from the completion of Work under a particular Agreement or the termination of this Contract, whichever is earlier, Company or its representative shall have the right to inspect, copy and audit, during Contractor's normal business hours, its books and records of every description for the purpose of determining the accuracy of any charges, claims or demands relating to Work.

IX. COMPLIANCE In the performance of all Work, Contractor warrants and represents that it and its subcontractors shall comply with all applicable statutes, ordinances, rules and regulations, including but not limited to those administered by the U.S. Occupational Safety and Health Administration, the U.S. Environmental Protection Agency, the U.S. Department of Transportation ("DOT") and state agencies exercising concurrent or similar jurisdiction; and Contractor shall indemnify and hold harmless Company from any and all claims or demands of a penal nature or civil penalties which may arise from violation of such statutes, ordinances, rules and regulations by Contractor or any subcontractor employed by it.

X. COMPANY PREMISES Contractor shall conform and shall require its employees, agents and subcontractors to conform, while at or near the location of the Work or on Company's premises, to all requirements of Company, including, but not limited to, Company's rules of conduct, safety rules, contractor safety policies, routes of ingress and egress and other requirements for the protection of persons or property. Contractor shall provide and take all safety precautions which the nature of the Work may require or indicate and keep the Work location free from accumulations of waste and rubbish. Upon completion of all Work, Contractor shall clean up and dispose all waste and rubbish generated by it or its subcontractors, collect unused material belonging to it or its subcontractors, and restore the location to as clean and orderly a condition as existed prior to commencement of the Work.

XI. ACCIDENT REPORTS Contractor shall report to Company in writing, as soon as practicable, all accidents or occurrences resulting in bodily injury, including death, or damage to or destruction of property arising out of or during the course of performance of any Agreement and, upon request, shall furnish Company with copies of all reports made by Contractor to Contractor's insurer or to others of such accidents and occurrences.

XII. DRUG-FREE WORKPLACE A. Contractor and each of its subcontractors performing Work at any Operational Facility shall establish and enforce within its organization an anti-drug program to assure a drug-free workplace. Contractor's anti-drug program shall include provisions for the auditing by Contractor of its subcontractors' anti-drug programs. "Operational Facility" means the entire premises of each Company processing plant, terminal, loading rack, pipeline, storage facility, warehouse, garage, shop, construction location and field worksite.

B. Contractor represents and warrants that it and its subcontractors shall assign and allow to Work at Operational Facilities only employees who have current negative drug screen results under their employer's anti-drug program. A current result is one based on the most recent drug screen performed within 12 months of a day on which Work is to be performed.

C. Before performing Work at any Operational Facility, Contractor shall furnish and cause each of its subcontractors to furnish Company with documentation of their respective anti-drug programs demonstrating that each program meets or exceeds the requirements of Company's Drug, Alcohol and Illegal Items Policy attached hereto as Exhibit III and meets or exceeds the requirements of any applicable law or regulation. Complete records of the anti-drug program shall be kept at Contractor's and each subcontractor's home office, respectively, and be available for audit by Company during regular office hours. Failure or refusal by Contractor or a subcontractor to establish and maintain a satisfactory anti-drug program, keep adequate records of it, or permit Company to audit compliance with it shall be grounds for immediate suspension of Contractor's and its subcontractor's authorization to proceed with Work or termination of this Contract.

D. Before performing Work at any Operational Facility, Contractor and each subcontractor shall certify to Company in a writing signed by an executive officer of the employer that each employee (identified by name, Social Security Number or employee I.D. number and date of drug screen result) who will perform Work at the Operational Facility has a current negative drug screen result under the employer's anti-drug program. Such certification shall be kept current throughout the duration of the Work, and notice of any change in an employee's certified status shall be given by the employer to Company in writing immediately. Company may exclude from Operational Facilities any Contractor or subcontractor employee who does not have a current certification, and any delay in the performance of Work due to lack of properly certified employees will be for the account of Contractor.

E. On any pipeline or other DOT-regulated work, Contractor and its subcontractors shall also furnish Company with written certification of each employee's negative drug screen results under DOT regulations.

XIII. INSURANCE A. Contractor, at its own expense, shall provide and maintain in force with insurance companies acceptable to Company the kinds of insurance and minimum amounts of coverage set forth in paragraph B, below, to cover all loss and liability for damages on account of bodily injury, including death, and damage to or destruction of property caused by or arising from any and all activities carried on or any and all Work performed under any Agreement. Contractor shall cause its insurer to name Certificate Holder as an additional insured on its Auto, General and Excess Liability insurance policies and grant Certificate Holder a waiver of subrogation on its Workers= Compensation insurance policy. "Certificate Holder" shall have the meaning provided in the Certificate Holder Definition in Exhibit IV. If Contractor fails or refuses to carry out any of the provisions of this Article XIII, Company shall, in addition to any right to recover damages or obtain other relief, have the right to suspend Contractor's authorization to proceed with Work or terminate this Contract.

B. 1) WORKERS= COMPENSATION (Including Occupational Disease) and EMPLOYER'S LIABILITY INSURANCE. Contractor's Workers= Compensation and Employer's Liability coverages shall apply to all employees, including borrowed servants, in ccordance with the benefits afforded by the statutory Worker's Compensation Acts, USL & H and Maritime Acts applicable to the State, erritory or District of hire, supervision or place of accident. A waiver of subrogation to Certificate Holder is required. Policy limits ıall not be less than:

Worker's Compensation: Statutory Limits.
Employer's Liability: $500,000, each accident; $500,000 Disease, policy limit; $500,000 Disease, each employee.

2) COMMERCIAL GENERAL LIABILITY INSURANCE, as primary policy over all others, covering premises, operations, products and completed operations, independent contractors, and blanket contractual liability. The policy shall cover all liabilities arising out of explosion, collapse and underground ("XCU") hazards. The policy shall be endorsed to provide broad-form property damage, including completed operations, coverage. An "additional insured" endorsement naming Certificate Holder is required. Policy limits shall not be less than:

Bodily Injury: $500,000 per occurrence, $1 million aggregate.
Property Damage: $500,000 per occurrence, $1 million aggregate.
OR Combined Single Limit (CSL) of $1 million per occurrence, $2 million aggregate.

3) COMPREHENSIVE-AUTOMOBILE LIABILITY INSURANCE, as primary policy over all owned, hired and non-owned automotive equipment. An "additional insured" endorsement naming Certificate Holder is required. Policy limits shall not be less than:

Bodily Injury: $500,000 per person, $500,000 per occurrence/accident.
Property Damage: $500,000 per occurrence.
OR Combined Single Limit of $1 million per occurrence.

4) EXCESS/UMBRELLA LIABILITY INSURANCE, to be primary excess over all others:

____ None. _____ $1 million. _____ $2 million. _____ $3 million. ___X__ $5 million. ___ Other: $_____.

5) Additional insurance and surety limits:

a) ___ NONE REQUIRED.
b) ___ ALL-RISK BUILDER'S RISK POLICY with limits of $_____, Minimum Deductible $_____.
c) ___ CONTRACTOR'S EQUIPMENT FLOATER POLICY
d) ___ OWNER/CONTRACTOR'S PROTECTIVE LIABILITY POLICY with minimum limits of $500,000 CSL.
e) ___ CRANE COVERAGE -- LIFTER'S LIABILITY POLICY with limits of $500,000 CSL.
f) ____ PROFESSIONAL LIABILITY INSURANCE covering acts, errors, omissions, malpractice, as applicable, potentially arising from or pertaining to any Work to be performed by Contractor, its employees, agents or subcontractors; policy limits shall not be less than $1 million per occurrence; OR in lieu of such insurance, Contractor may furnish an irrevocable letter of credit in form and amount and with an issuer satisfactory to Company.
g) ___ PERFORMANCE AND MAINTENANCE BOND. Upon execution of this Contract and prior to commencing performance hereunder, Contractor shall execute, with a surety company satisfactory to Company, a Surety Bond to guarantee completion of the Work within the time provided, the payment of all claims and the fulfillment of all obligations arising, either directly or indirectly, under any Agreement, including but not limited to the defense of all litigation incidental to any Agreement to which Certificate Holder is made a party. The surety limits shall be not less than one hundred percent (100%) of the total estimated contract price or as agreed to by Company. In lieu of such surety bond, Contractor may cause to be issued an irrevocable letter of credit payable to the order of Company in such amount, in a form and with an issuer acceptable to Company; or, if acceptable to Company, Contractor may use a combination of surety bond, letter of credit, or corporate or personal guaranty.
h)_X__ POLLUTION LIABILITY

C. Contractor's insurance policies shall be endorsed as follows and in accordance with state law:

Worker's Compensation policy:

1) Blanket waiver of subrogation, OR 2) "The Insurers hereby waive their rights of subrogation against Certificate Holder and any individual, firm, or corporation, their subsidiaries, factors or assigns for whom or with whom the Assured may be working."

Primary General, Auto and Excess Liability Policies:

1) Blanket additional insured endorsement, OR 2) the Form of Additional Insured Endorsement in Exhibit IV.

D. Contractor represents and warrants that at all times during the term of this Contract it shall have furnished or caused to be furnished to Company an original, current certificate of insurance on forms acceptable to Company (most recent CORD form) reflecting:

1) The kinds and amounts of insurance required above.
2) The insurance company or companies carrying the required coverages.
3) The policy number and the effective and expiration dates of each policy.
4) That Certificate Holder will be given thirty (30)-day prior written notice of any material change in or termination of any policy.
5) That a waiver of subrogation under Contractor's Worker's Compensation policy has been issued to Certificate Holder.
6) That Certificate Holder has been named as an "Additional Insured" on Contractor's primary Auto & General Liability policies and Excess/Umbrella policies.
7) That the Broad Form Property Damage and XCU Coverage Endorsements have been attached to all applicable policies.
8) The territorial limits of all policies.
9) That the indemnification and hold-harmless provisions of this Contract are insured.
10) That the "aggregate" as reported in the policy limits in the Certificate of Insurance, has not been exposed or used up by prior or pending claims.
11) A Certificate Holder notation reading as shown in the Form of Certificate Holder Notation in Exhibit IV.

E. All policies shall provide that the insurance company will notify Certificate Holder not less than thirty (30) days prior to the termination of any policy and before any changes are made which restrict or reduce the coverage provided or change the name of the insured.

F. Contractor represents and warrants that insurance policies with the coverages and limits required in this Contract have been issued to Contractor and shall remain in full force and effect during the term of this Contract and that none of these policies shall be canceled or changed, so as to change the name of the named insured or restrict or reduce the insurance coverages required by this Contract and described by Contractor's certificate of insurance, without thirty (30)-day prior written notice of such cancellation or change being delivered by Contractor to Certificate Holder at the address shown in the Form of Certificate Holder Notation in Exhibit IV.

G. Contractor shall require each of its subcontractors to provide the foregoing coverages as well as any other coverages that Contractor may consider necessary, all to be endorsed with the above-specified waiver of subrogation and additional insured wording; and any deficiency in the coverages, policy limits or endorsements of said subcontractors will be the sole responsibility of Contractor.

H. It is understood and agreed by Contractor and Company that the coverages granted to the Certificate Holder "additional insured" in Contractor's policies of insurance as required in this Contract are to apply on a primary basis over all other valid and collectible insurance owned by and or available to the "additional insured." It is further understood and agreed by Contractor and Company that such coverages provided by Contractor to the "additional insured" are applicable to liability associated with the operations, products, completed operations, premises, equipment and or vehicles contemplated by this Contract. Contractor shall be solely responsible for any deductible or self-insured retention associated with the coverages granted to the Aadditional insured.@

XIV. INDEMNITY **EXCEPT AS EXPRESSLY LIMITED IN THIS CONTRACT, CONTRACTOR SHALL INDEMNIFY, DEFEND AND HOLD HARMLESS COMPANY, ITS DIRECTORS, OFFICERS, AGENTS AND EMPLOYEES AND THEIR SUCCESSORS, HEIRS AND ASSIGNS ("INDEMNIFIED PARTIES") FROM AND AGAINST ANY AND ALL CLAIMS, LOSSES, DAMAGES, CAUSES OF ACTION, SUITS, AND LIABILITY OF EVERY KIND AND CHARACTER (INCLUDING, BUT NOT LIMITED TO, ALL COSTS OF DEFENSE, SETTLEMENT AND REASONABLE ATTORNEY'S FEES) ("CLAIMS")** ***TO THE EXTENT CAUSED BY OR ARISING FROM CONTRACTOR'S OR ITS SUBCONTRACTORS' FAULT OR NEGLIGENT PERFORMANCE OF THE*** **SERVICES TO BE PROVIDED UNDER ANY AGREEMENT, WHICH MAY BE ASSERTED BY ANY THIRD PARTY, GOVERNMENTAL AGENCY OR ENTITY, CONTRACTOR, OR CONTRACTOR'S EMPLOYEES, AGENTS, CONTRACTORS, SUBCONTRACTORS OR THEIR EMPLOYEES OR AGENTS. THIS DUTY OF INDEMNIFICATION INCLUDES, BUT IS NOT LIMITED TO, CLAIMS RELATING TO OR ARISING OUT OF BREACH OF CONTRACT, DEATH, PERSONAL INJURY, PROPERTY DAMAGE OR LOSS (INCLUDING, WITHOUT LIMITATION, POLLUTION OR ENVIRONMENTAL DAMAGE), ANY THEORY OF STRICT LIABILITY, AND ANY CIVIL OR CRIMINAL FINES OR PENALTIES RELATING TO OR ARISING UNDER ANY CLAIM. WHERE A CLAIM IS THE RESULT OF THE JOINT OR CONCURRING NEGLIGENCE OF CONTRACTOR AND AN INDEMNIFIED PARTY, CONTRACTOR'S DUTY OF INDEMNIFICATION AS SET FORTH IN THIS ARTICLE XIV SHALL BE IN PROPORTION TO ITS ALLOCABLE SHARE OF SUCH JOINT OR CONCURRING NEGLIGENCE.**

XV. PATENTS AND LICENSES A. Contractor represents and warrants that the use or construction of any and all tools, equipment and processes furnished by Contractor and used in any Work does not and shall not infringe on any license or patent which has been issued or applied for; and, in addition to all other indemnifying provisions contained in this Contract, Contractor agrees to indemnify, defend and hold Company harmless from any and all claims, demands, and causes of action of every kind and character in favor of or made by any patentee, licensee or claimant of any right or priority to such tool, equipment or process, or the use or construction thereof, which may result from or arise out of furnishing or use of any such tool, equipment, or process by Contractor.

B. Contractor warrants that it has obtained, or will obtain, an assignment of any original work of authorship created by any of its employees or independent contractors during the performance by Contractor of its duties and obligations under ny Agreement. Contractor further warrants that it will disclose such original works of authorship to Company on a timely basis and vill timely assign such rights to Company.

C. Contractor warrants that it has obtained, or will obtain, from its employees and independent contractors an assignment of all rights in any new and useful process, machine, manufacture or composition of matter, and any new and useful improvement thereof made by any of them in the course of the performance of Contractor's duties and obligations under any Agreement. Contractor further warrants that it will promptly disclose any new and useful process, machine, manufacture or composition of matter and any new and useful improvement thereof made by any of its employees or independent contractors in the course of the performance of Contractor's duties and obligations under any Agreement and will assign such rights to Company on demand.

XVI. SURVIVAL As part of the consideration for this Contract, Contractor hereby agrees that its provisions concerning indemnity, warranty, waiver of subrogation and patent infringement shall extend to and be enforceable by and shall inure to the benefit of any owner, joint owner, co-venturer, operator or non-operator for which Company is acting and shall survive completion of any Work and the termination of this Contract.

XVII. SUBCONTRACTING A. No subcontract may be awarded by Contractor unless approved in advance by Company in writing. Contractor shall be and remain primarily liable for all obligations assumed by Contractor under this Contract. Contractor's subcontracting of any portion of the Work shall not release or relieve Contractor from any obligation or liability under any Agreement. Contractor shall furnish Company with a true and complete copy of each subcontract awarded by Contractor within five (5) days after such subcontract is executed. Contractor shall oversee and be responsible for the performance of its subcontractors and keep accurate books, records and accounts and furnish such reports and information as Company may request relative to subcontracts.

B. Contractor represents and warrants that, prior to entry on Company's premises: 1) each subcontractor shall be given a copy of this Contract and any related Agreement (provided, however, Contractor may strike out or delete provisions pertaining to its compensation), 2) each subcontractor shall be familiar with each Contract term and condition, and 3) each subcontractor shall agree, to the extent of its respective portions of the Work, to perform fully each Contract term and condition.

XVIII. DEFAULT If Contractor breaches any warranty contained in any Agreement, or if any of Contractor's representations contained in any Agreement shall be found to be false, or if Contractor fails to prosecute the Work, or fails to make the progress set forth in any Agreement, or fails to pay any indebtedness when due, or fails to perform any of the conditions of or obligations assumed under any Agreement, or becomes insolvent, or if any voluntary or involuntary proceedings are instituted by or against Contractor in bankruptcy or insolvency, or if a receiver, trustee or assignee is appointed for the benefit of creditors of Contractor ("Events of Default"), Company may, if it so elects and without prejudice to any other rights or remedies it may have in law or equity:

1) suspend Contractor's authorization to proceed with Work,
2) remove Contractor from Company's Approved Contractor List,
3) terminate this Contract or any Agreement,
4) suspend payment in whole or in part under any Agreement until the Event of Default has been remedied, and/or,
5) take the Work remaining to be completed wholly or partly out of the hands of Contractor or any other person in whose hands or possession the Work or any part of it may be, in which event Company may award such Work to another contractor. Contractor in such event, in the manner and to the extent directed by Company, and only to such extent, shall assign to Company all of the rights of Contractor under its work orders, purchase orders and subcontracts relating to the Work.

XIX. TERMINATION Either party may terminate this Contract by giving the other party thirty (30)-day prior written notice, but neither party shall, by the termination of this Contract, be relieved of its respective obligations and liabilities arising from or incidental to Work performed prior to termination. Except as expressly provided in this Contract, it may not be terminated during the performance of any Agreement.

XX. FORCE MAJEURE If either party is rendered unable, wholly or in part, by force majeure to carry out its obligations under any Agreement, then on such party giving notice and full particulars of such force majeure in writing to the other party as soon as practicable after the occurrence of the cause relied on, then the obligation of the party giving such notice, so far and only insofar as affected by such force majeure, shall be suspended during the continuance of any inability so caused, but for no longer period, and such cause shall be remedied with all reasonable dispatch. "Force majeure" means acts of God, strikes, lockouts or labor disputes involving a general stoppage of Work on the job, civil disturbance, military action, rules, regulations, orders or acts of governmental authority, or other similar causes beyond the control of Company or Contractor. The requirement that events of force majeure be remedied with all reasonable dispatch shall not require the settlement of labor matters when such course is inadvisable in the judgment of the party having the difficulty.

XXI. ENTIRE AGREEMENT This Contract and any Agreement represent the entire agreement of the parties. No provision of any delivery ticket, invoice or other instrument used by Contractor in describing any Work shall supersede the provisions of any Agreement. The terms of this Contract shall prevail over conflicting terms of any Agreement or Work order, oral or written.

XXII. TIME OF THE ESSENCE Time is expressly declared to be of the essence of all Agreements.

XXIII. NON-WAIVER No election by Company under this Contract shall constitute a waiver of any other rights or remedies available to it at law or in equity. Neither waiver by Company nor any amendment of any of the terms, provisions, or conditions of any Agreement shall be effective unless in writing and signed by an authorized representative of Company.

XXIV. NOTICES All notices to be given with respect to this Contract and any Agreement shall be given to Company and to Contractor, respectively, at the address first above written and shall be in writing, postage or delivery charges prepaid. All notices shall be effective upon actual receipt or refusal of delivery by the party to whom given. All sums due to Contractor under any Agreement shall be payable at ***Contractor's principal place of business, Garner Environmental Services, Inc., 1717 West 13th Street, Deer Park, Harris County, Texas 77536.***

XXV. ASSIGNMENT This Contract shall inure to the benefit of the parties, their successors and assigns. No Agreement or any payment accruing under it is assignable by Contractor, nor may it be pledged by Contractor as security without the prior written consent of Company.

XXVI. GOVERNING LAW This Contract and all Agreements are and shall be deemed to be made and delivered in Harris County, Texas, and shall be governed by and construed in accordance with the law of the State of Texas, without regard for its principles of conflicts of laws. Any legal action arising under this Contract shall be brought in the courts of the State of Texas or of the United States for the Southern District of Texas, Houston Division, to which venue and non-exclusive jurisdiction each party expressly consents for itself and in respect of its property for all purposes.

XXVII. DISPUTES If Company and Contractor have a dispute under any Agreement, they both undertake to explore, in good faith, resolution of the dispute through negotiation, mediation or similar alternative dispute resolution techniques prior to filing litigation. If any litigation or other formal proceeding must be filed by either party to preserve its rights under a statute of limitations or other legal deadline during the pendency of any alternative dispute resolution technique, the party filing such action will not require the other party to answer (if such delay is permitted by applicable rules) and will do all that is otherwise necessary to stay the action until the pending alternative resolution technique is terminated. If either party believes the dispute is not suitable for such alternative dispute resolution techniques, or if such techniques do not produce results satisfactory to the parties, either party may proceed with litigation. If the parties are unable to resolve any dispute by the alternative dispute resolution techniques described above and either party proceeds with litigation, the losing party shall pay the prevailing party's reasonable attorneys' fees, costs and necessary disbursements in addition to any relief that a court may grant.

XXVIII. AUTHORIZED REPRESENTATIVE Contractor represents and warrants that the person executing this Contract and any Agreement on behalf of Contractor is a duly authorized representative of Contractor and is vested with full authority to bind Contractor.

XXIX. CONFIDENTIAL INFORMATION A. All information concerning the business, customers, products, processes and trade secret information of Company ("Confidential Information") which may come into the possession of Contractor during the course of the negotiation or performance of this Contract or any Agreement is confidential to Company, shall be used by Contractor for the sole purpose of providing services to Company under this Contract and shall not be disclosed by Contractor to any third party without the prior written consent of Company. All Confidential Information shall become and remain the property of Company and shall be deemed to have been entrusted to Contractor only for the limited purposes of this Contract, and Contractor will not, without the prior written consent of Company use, reproduce or copy, or permit the use, reproduction or copying of any Confidential Information; provided, however, Contractor may make adequate reproductions and copies for the purpose of carrying out the Work. All Confidential Information received or created by Contractor and any reproductions or copies thereof made by Contractor shall be delivered to Company at any time prior to termination of this Contract at the request of Company and shall be delivered to Company immediately upon termination of this Contract. Nothing contained in this Contract or in any disclosures made by Company under it shall be construed to grant to Contractor any license or other rights of Company in or to Confidential Information or under any copyright or patent which has been or may in the future be issued with respect to Confidential Information.

B. Contractor will not be bound by the provisions of this Article XXIX with respect to information which:

(1) was available to the public prior to receipt of such information by Contractor pursuant to any Agreement; or

(2) becomes available to the public subsequent to receipt of such information by Contractor pursuant to any Agreement and through no fault of Contractor; or

(3) was already in Contractor's possession and not acquired, either directly or indirectly, from Company under an obligation of confidentiality; or

(4) subsequently is obtained from a third party who is lawfully in possession of such information and who is not under a contractual or fiduciary obligation to Company or another person with respect to such information.

XXX. TENSE, GENDER AND NUMBER Unless expressly provided otherwise, the use in this Contract of the past, present or future tense shall include the others, the masculine, feminine or neuter gender shall include the others, and the singular or plural number shall include the other.

XXXI HEADINGS The titles to the articles of this Contract are for the convenience of the parties, only; they are not a part of the Contract and shall have no effect in the construction or interpretation of it.

XXXII EXHIBITS The Exhibits checked below and attached to this Contract are incorporated in and made a part of it for all urposes:

_x_	Exhibit I	Scope of Work
_x_	Exhibit II	Price & Invoicing
_x_	Exhibit III	Drug, Alcohol & Illegal Items Policy
_x_	Exhibit IV	Insurance
___	Exhibit V	Schedule
___	Exhibit VI	Drawings & Attachments
___	Exhibit VII	General Requirements
___	Exhibit VIII	Consultant Terms & Conditions
___	Exhibit IX	_____

In the event of any conflict between the foregoing terms of this Contract and the Exhibits, the foregoing terms shall prevail.

ENTERPRISE PRODUCTS OPERATING L.P.
By Enterprise Products OLPGP, INC., its general partner

By: _____

Title: _____

GARNER ENVIRONMENTAL SERVICES, INC.
CONTRACTOR

By: Otis Chambers

Title: EXECUTIVE VICE PRESIDENT

SERVICE AGREEMENT.DOC

EXHIBIT I

SCOPE OF WORK

Contractor's Work will be:

EMERGENCY RESPONSE AND RELATED SERVICES TO BE PERFORMED ON AS NEEDED, AS AVAILABLE BASIS SUBJECT TO CIRCUMSTANCES THEN EXISTING.

EXHIBIT II

PRICE AND INVOICING

IN ACCORDANCE WITH CONTRACTOR'S CURRENT RATE SHEET.

EXHIBIT III

ENTERPRISE PRODUCTS OPERATING L.P.

POLICY

ILLEGAL AND UNAUTHORIZED ITEMS AT
OPERATIONAL FACILITIES AND IN OPERATIONAL VEHICLES

Enterprise is committed to providing a safe working environment for its employees, visitors, and contract personnel.

THE POSSESSION, USE, SALE, TRANSFER, RECEIPT OR PRESENCE AND BEING UNDER THE INFLUENCE OF DANGEROUS DRUGS OR CONTROLLED SUBSTANCES (EXCEPT AS LAWFULLY PRESCRIBED FOR THE PERSON IN POSSESSION AND DISCLOSED BY A PHYSICIAN'S ADVISORY FORM), DRUG PARAPHERNALIA OR ALCOHOLIC BEVERAGES ARE FORBIDDEN AT, UPON OR WITHIN ENTERPRISE OPERATIONAL FACILITIES AND OPERATIONAL VEHICLES.

Operational facilities include the entire premises of all terminals, processing plants, loading racks, pipelines, storage, warehouses, garages, shops, construction locations and field worksites. Operational vehicles include all vehicles (tractors, trailers, transports and pickups) bearing an external company name, logo, trade name, trademark or placard. Dangerous drugs include all drugs and devices which are prohibited by Federal or State law from being dispensed without a prescription. Controlled substances include cocaine, marijuana, narcotics and all other drugs and materials which are controlled under Federal or State law. Drug paraphernalia includes roach clips, gram scales and any other property or material which Enterprise deems is intended or has been adapted or modified for drug use. Alcoholic beverages include liquor, beer and wine, except liquor, beer and wine stored in passenger vehicles. "Under the influence" means having detectable levels of dangerous drugs, controlled substances or alcohol in the blood or urine.

Employees will not be permitted to work while under the influence of drugs or alcohol. Individuals who appear to be unfit for duty will be released from duty and may be subject to a physical examination at a designated medical facility. Refusal to comply with a fitness-for-duty examination may result in disciplinary action up to and including DISCHARGE.

Any employee who uses or is found to be in possession or under the influence of these illegal or unauthorized items at, upon or within these Enterprise facilities or vehicles will be relieved from duty immediately and subject to disciplinary action up to and including DISCHARGE. Others who use or are found to be in possession or under the influence of such items at, upon or within these Enterprise facilities or vehicles will be removed from Enterprise's vehicles and facilities and denied future admission to Enterprise property.

Enterprise reserves the right to search, inspect and submit to laboratory testing persons and property found at, upon or within Enterprise facilities or vehicles. Entry onto operational facilities or vehicles constitutes consent to searches or inspections. Any employee who refuses to submit his person or property to search, inspection or testing or who refuses to consent to the release of medical information in connection with a company physical examination or relevant to any accident, injury or incident involving the employee and relating to the safety, health or welfare of the employee, other employees or the public will be relieved from duty immediately and subject to disciplinary action up to and including DISCHARGE; others at, upon or within Enterprise facilities or vehicles who refuse to submit their persons or property to search, inspection or testing will be removed from and denied future admission to Enterprise property.

Off-the-job illegal drug use which could adversely affect an employee's job performance or which could jeopardize the safety of other employees, the public, or company facilities, or where such usage adversely affects the public trust in the ability of the company to carry out its responsibilities, is also cause for disciplinary action, up to and including DISCHARGE. Employees who are arrested for off-the-job drug activity may be considered in violation of this policy. In deciding what action to take, the company will take into consideration the nature of the charges, the employee's present assignment and record with the company, and the impact of the employee's arrest upon the conduct of the company's business.

Employees who wish to report drug or alcohol use in violation of this policy should contact the appropriate Vice President in charge of their group or the Vice President -- Human Resources, directly. The company will make every effort to protect anonymity, and such information will be treated in confidence.

Enterprise requires that all prescriptions and over-the-counter medicines at Enterprise operational facilities and in Enterprise operational vehicles be in original containers, with prescriptions showing the name and doctor of the person in possession. Any employee of an operational facility or driver of an operational vehicle who is taking a prescription drug must furnish his supervisor, before reporting to duty, with a Physician's Advisory form identifying the drug and certifying that, taken as directed, it will not impair the employee's physical qualifications to perform his duties and must carry with him while on duty a copy of the Physician's Advisory form acknowledged by his supervisor.

EXHIBIT IV
INSURANCE

Certificate Holder Definition

"Certificate Holder" shall mean Enterprise Products Partners L.P., Enterprise Products Operating L.P., Enterprise Products GP, LLC, Enterprise Products OLPGP, Inc., Enterprise Products Company, Belvieu Environmental Fuels[7], Sabine Propylene Pipeline, L.P., Baton Rouge Pipeline, LLC., Belle Rose NGL Pipeline, LLC., Chunchula Pipeline Company, LLC, Propylene Pipeline Partnership, L.P., Cajun Pipeline Company, LLC, HSC Pipeline Partnership, L.P., Sorrento Pipeline Company, LLC, Enterprise Products Texas Operating L.P., EPIK Gas Liquids LLC, EPIK Terminaling L.P., Baton Rouge Fractionators LLC, Baton Rouge Propylene Concentrator, LLC, Enterprise Gas Processing LLC, Enterprise NGL Pipelines LLC, Enterprise NGL Private Lines & Storage LLC, Enterprise Fractionation LLC, Enterprise Norco LLC, Enterprise LOU-TEX Propylene Pipeline L.P., Enterprise LOU-TEX NGL Pipeline L.P., Grand Isle Pipeline LLC., Mid-America Pipeline Company LLC, Seminole Pipeline Company, Wilprise Pipeline Company LLC, each of their parent, subsidiary and affiliated companies, partners and joint venturers, and each owner or joint owner of any equipment or facility operated by Enterprise Products Operating L.P.

2. Form of Additional Insured Endorsement

It is agreed that such insurance as is afforded by the policy shall apply to Enterprise Products Partners L.P., Enterprise Products Operating L.P., Enterprise Products GP, LLC, Enterprise Products OLPGP, Inc., Enterprise Products Company, Belvieu Environmental Fuels[7], Sabine Propylene Pipeline, L.P., Baton Rouge Pipeline, LLC., Belle Rose NGL Pipeline, LLC., Chunchula Pipeline Company, LLC, Propylene Pipeline Partnership, L.P., Cajun Pipeline Company, LLC, HSC Pipeline Partnership, L.P., Sorrento Pipeline Company, LLC, Enterprise Products Texas Operating L.P.,EPIK Gas Liquids LLC, EPIK Terminaling L.P., Baton Rouge Fractionators LLC, Baton Rouge Propylene Concentrator, LLC, Enterprise Gas Processing LLC, Enterprise NGL Pipelines LLC, Enterprise NGL Private Lines & Storage LLC, Enterprise Fractionation LLC, Enterprise Norco LLC, Enterprise LOU-TEX Propylene Pipeline L.P., Enterprise LOU-TEX NGL Pipeline L.P., Grand Isle Pipeline LLC., Mid-America Pipeline Company LLC, Seminole Pipeline Company, Wilprise Pipeline Company LLC, each of their parent, subsidiary and affiliated companies, partners and joint venturers, and each owner or joint owner of any facility operated by one or more of them, as their interests may appear, to whom the named insured is obligated by contract to provide such insurance, but only to the extent of coverage required by such contracts as respects operations performed in connection with the insured and only if such contract was agreed to in writing or orally by the named insured or his/its representatives prior to the occurrence of any loss under such contract.

3. Form of Certificate Holder Notation

Enterprise Products Partners L.P., Enterprise Products Operating L.P., Enterprise Products GP, LLC, Enterprise Products OLPGP, Inc., Enterprise Products Company, Belvieu Environmental Fuels[7], Sabine Propylene Pipeline, L.P., Baton Rouge Pipeline, LLC., Belle Rose NGL Pipeline, LLC., Chunchula Pipeline Company, LLC, Propylene Pipeline Partnership, L.P., Cajun Pipeline Company, LLC, HSC Pipeline Partnership, L.P., Sorrento Pipeline Company, LLC, Enterprise Products Texas Operating L.P.,EPIK Gas Liquids LLC, EPIK Terminaling L.P., Baton Rouge Fractionators LLC, Baton Rouge Propylene Concentrator, LLC, Enterprise Gas Processing LLC, Enterprise NGL Pipelines LLC, Enterprise NGL Private Lines & Storage LLC, Enterprise Fractionation LLC, Enterprise Norco LLC, Enterprise LOU-TEX Propylene Pipeline L.P., Enterprise LOU-TEX NGL Pipeline L.P., Grand Isle Pipeline LLC., Mid-America Pipeline Company LLC, Seminole Pipeline Company, Wilprise Pipeline Company LLC, each of their parent, subsidiary and affiliated companies, partners and joint venturers, and each owner or joint owner of any facility operated by one or more of them, as their interests may appear, arising from the work to be performed under oral or written contract.

P. O. Box 573
Mont Belvieu, Texas 77580
Attention: Purchasing

4. Additional Terms for Work to be Performed in Louisiana

In all cases where Contractor's employees (defined to include Contractor's direct, borrowed, special or statutory employees) are covered by the Louisiana Worker's Compensation Act, La. R.S. 23:1021 et seq., Company and Contractor agree that all Work and operations performed by Contractor and its employees pursuant to the Contract are an integral part of and are essential to the ability of Company to generate Company's goods, products and services for purposes of La. R.S. 23:1061(A)(1). Furthermore, Company and Contractor agree that Company is the principal or statutory employer of Contractor's employees for purposes of La. R.S. 23:1061(A)(3). This provision is included for the sole purpose of establishing a statutory employer relationship to gain the benefits expressed in La.R.S. 23:1031 and La.R.S. 23:1061(a), and it is not intended to create an employer-employee relationship for any other purpose. Irrespective of Company's status as the statutory employer or special employer (as defined in La. R.S. 23:1031(c)) of Contractor's employees, Contractor shall remain primarily responsible for the payment of Louisiana Worker's Compensation benefits to its employees, and shall not be entitled to seek contribution for any such payments from Company.

This Section 4 applies to the extent, and only to the extent, that the laws of the State of Louisiana are applicable to any Work conducted under the terms and provisions of the Contract. In further consideration of the amounts or other consideration to be received by Contractor pursuant to the Contract, Company and Contractor agree that Contractor shall be responsible for the payment of all compensation benefits paid by Contractor and/or Contractor's underwriters. Contractor stipulates and agrees that Company shall be named as an alternate employer under any and all worker's compensation insurance coverage maintained by Contractor. Contractor acknowledges that the price or other consideration for said performance, service, work, or operations includes an amount necessary for Contractor to pay for such insurance coverage and stipulates and agrees that any such insurer (or the Contractor, if self-insured) shall agree to waive any and all rights of subrogation, contribution or indemnity against Company thereunder.

EXHIBIT VIII

CONSULTANT TERMS & CONDITIONS

A. Reports

If any data, measurements, assessments, test results or analyses related to Company's facilities, operations, actual or proposed activities ("Data") or any interpretations thereof or recommendations based thereupon are to be contained in any letter, compilation, report or other document ("Report") prepared by Contractor for Company hereunder, Contractor shall submit the Report to Company in draft form for review and approval by Company before any Report in final form is prepared and issued by Contractor; and no Report shall be issued by Contractor in final form without such prior approval. Upon the completion of a Report in final form or upon a determination in Company's sole discretion that no Report shall be issued by Contractor with respect to any matter, Contractor shall destroy all drafts and preliminary versions of such Report. Company and Contractor hereby expressly agree and acknowledge that Contractor's services hereunder specifically exclude the provision of legal advice to Company, and Contractor shall refrain from expressing in any Report conclusions or opinions concerning Company's compliance with or violation of any statute, regulation, ordinance, rule or order of any federal, state or local governmental authority. Contractor shall employ no intemperate, exaggerated, speculative or inflammatory language in any Report and shall make only reasonable, accurate and truthful statements of fact, opinion and professional judgement.

B. Confidentiality

1. Contractor shall take all reasonable steps to safeguard Confidential Information against unauthorized disclosure and assure that the confidentiality provisions of this Contract are not violated.

2. If Contractor wishes to use third-party services requiring disclosure of Confidential Information to that third party, Recipient will notify Company, requesting that an appropriate confidentiality agreement be executed by Company with such third party. Company will advise Contractor in writing when it has concluded such a confidentiality agreement and authorize disclosure of Confidential Information by Contractor to such third party; provided, however, Company shall be under no obligation to enter into a confidentiality agreement with any third party referred to it by Contractor.

EPCO
HOLDINGS,
INC.

WORK CONTRACT NO. **#4864**
ORIGINATOR: **CAREN GOZZI**
(Type/Print Department and Location)

EPCO HOLDINGS, INC.
SERVICE AGREEMENT (Rev. 07/06)

THIS CONTRACT is entered into this **6th** day of **FEBRUARY, 2007** in the City of Houston, Harris County, Texas, between EPCO Holdings, Inc., a Delaware Corporation, and its Affiliates, P. O. Box 4735, Houston, Texas 77210-4735 ("Company"), and:

ANDERSON POLLUTION CONTROL, INC.
(Full Legal Name)

A TEXAS CORPORATION
(State) (Corporation, Partnership or Sole Proprietorship)

1011 WEST LEWIS, SUITE A
(Address)

CONROE, TX 77301 ("Contractor").
(City) (State) (Zip)

IN CONSIDERATION of the mutual promises in this Contract and other good and valuable consideration, the parties agree as follows:

I. APPROVED CONTRACTOR LIST Upon execution of this Contract by Contractor and Company, Contractor shall be included on Company's Approved Contractor List, indicating Contractor's eligibility to perform Work for Company; and Company and Contractor agree that this Contract shall remain in force until terminated as provided by its terms.

II. DEFINITIONS "Contract" and "Agreement" mean this Contract and any subsequent oral or written Work order or agreement (together with any drawings, specifications or other exhibits attached to it) between the parties for Work. "Work" means all labor, goods, materials and services required to be performed and furnished by Contractor under any Agreement. "Affiliate" means with respect to any relevant entity, any other entity that directly or indirectly Controls, is Controlled by, or is under common Control with, such relevant entity in question. "Control" means with respect to an entity, the ability or power, directly or indirectly, through one or more intermediaries, to direct or cause the direction of the management of such entity, whether through ownership of voting securities, by contract or otherwise.

III. PERFORMANCE Contractor represents and warrants that all Work shall be in strict accordance with and subject to all Contract terms and conditions, that it has adequate equipment in good working order and fully trained personnel capable of efficiently operating such equipment or performing any services provided under any Agreement, and that all Work shall be performed in a good and workmanlike manner, satisfactory and acceptable to Company.

IV. INDEPENDENT CONTRACTOR Contractor is and shall be an independent contractor with respect to Work, and neither Contractor nor its employees or subcontractors or their employees shall be deemed, for any purpose, to be the employee, agent, servant, or representative of Company in the performance of Work. Company shall have no direction or control of the Contractor or its employees and agents except in the results to be obtained. Work shall conform with all applicable specifications and meet the approval of Company and shall be subject to the general right of inspection by or for Company. The actual performance and superintendence of Work shall be by Contractor, but Company or its representative shall have unlimited access to Contractor's operations to determine whether Work is being performed by Contractor in accordance with the Contract.

V. EMPLOYMENT CONTRIBUTIONS AND BENEFITS Contractor agrees to accept full and exclusive liability for the payment of and to pay when due any and all premiums, contributions and taxes for Workers= Compensation Insurance and Unemployment Insurance and for old age pensions, annuities and other retirement benefits imposed by or pursuant to Federal or State law and measured by the wages, salaries or other remuneration paid to persons employed by Contractor; and Contractor further agrees to indemnify and hold Company harmless against any liability for any such premiums, taxes or contributions which may be assessed against Company with respect to Contractor, its employees or subContractors.

VI. TAXES AND FEES Contractor agrees to accept full and exclusive liability for the payment of and to pay when due all taxes, licenses and fees levied or assessed by any governmental agency on Contractor in connection with or incident to the performance of any Agreement. Contractor agrees to require the same covenant of and be liable for any breach of it by its subcontractors. Contractor agrees to reimburse Company on demand for all such local, state or federal taxes or governmental charges which Company may be required or deem it necessary to pay on account of employees of Contractor or its subcontractors, or Company may deduct such payments from any sums which may be or become due to Contractor from Company; Contractor agrees to furnish Company with timely, sufficient and accurate information to make such reports and to pay such taxes and governmental charges if requested by Company.

VII. LABOR AND MATERIAL Contractor shall pay all claims for labor and material related to the Work and shall not permit any liens of any kind to be fixed against the property of Company or the property of others arising out of claims of Contractor, its employees, mechanics, materialmen, or subContractors; and upon the completion of the Work, Contractor shall furnish Company with evidence satisfactory to Company of the payment of all such claims. Contractor shall indemnify and hold harmless Company from and

against all such claims or liens; and Contractor agrees, that, without waiver of any other rights or remedies available to Company, any sums due to Contractor from Company may be withheld and applied by Company toward the discharge or payment of any such claims or liens.

VIII. PAYMENT FOR WORK Payment for Work shall be as provided in Exhibit II or as provided in any Agreement. Payment for Work performed on a reimbursable-cost basis shall be made by Company to Contractor in accordance with Contractor's then-current rate schedule; Contractor shall furnish Company its rate schedule prior to commencing any such Work and notify Company in writing of any changes in the rate schedule. Neither payment for nor use of Work in whole or in part by Company shall constitute acceptance of any Work or materials which do not conform to Contract terms and specifications or settlement of any unsettled claims, liabilities, duties, liens or other encumbrances. Contractor shall keep accurate books and records of all Work, and, within two (2) years from the completion of Work under a particular Agreement or the termination of this Contract, whichever is earlier, Company or its representative shall have the right to inspect, copy and audit, during Contractor's normal business hours, its books and records of every description for the purpose of determining the accuracy of any charges, claims or demands relating to Work.

IX. COMPLIANCE In the performance of all Work, Contractor warrants and represents that it and its subContractors shall comply with all applicable statutes, ordinances, rules and regulations, including but not limited to those administered by the U.S. Occupational Safety and Health Administration, the U.S. Environmental Protection Agency, the U.S. Department of Transportation ("DOT") and state agencies exercising concurrent or similar jurisdiction; and Contractor shall indemnify and hold harmless Company from any and all claims or demands of a penal nature or civil penalties which may arise from violation of such statutes, ordinances, rules and regulations by Contractor or any subcontractor employed by it.

X. COMPANY PREMISES Contractor shall conform and shall require its employees, agents and subContractors to conform, while at or near the location of the Work or on Company's premises, to all requirements of Company, including, but not limited to, Company's rules of conduct, safety rules, Contractor safety policies, routes of ingress and egress and other requirements for the protection of persons or property. Contractor shall provide and take all safety precautions which the nature of the Work may require or indicate and keep the Work location free from accumulations of waste and rubbish. Upon completion of all Work, Contractor shall clean up and dispose all waste and rubbish generated by it or its subcontractors, collect unused material belonging to it or its subcontractors, and restore the location to as clean and orderly a condition as existed prior to commencement of the Work.

XI. ACCIDENT REPORTS Contractor shall report to Company in writing, as soon as practicable, all accidents or occurrences resulting in bodily injury, including death, or damage to or destruction of property arising out of or during the course of performance of any Agreement and, upon request, shall furnish Company with copies of all reports made by Contractor to Contractor's insurer or to others of such accidents and occurrences.

XII. DRUG-FREE WORKPLACE A. Contractor and each of its subcontractos performing Work at any Operational Facility shall establish and enforce within its organization an anti-drug program to assure a drug-free workplace. Contractor's anti-drug program shall include provisions for the auditing by Contractor of its subcontractors' anti-drug programs. "Operational Facility" means the entire premises of each Company processing plant, terminal, loading rack, pipeline, storage facility, warehouse, garage, shop, construction location and field worksite.

B. Contractor represents and warrants that it and its subcontractors shall assign and allow to Work at Operational Facilities only employees who have current negative drug screen results under their employer's anti-drug program. A current result is one based on the most recent drug screen performed within 12 months of a day on which Work is to be performed.

C. Before performing Work at any Operational Facility, Contractor shall furnish and cause each of its subcontractors to furnish Company with documentation of their respective anti-drug programs demonstrating that each program meets or exceeds the requirements of Company's Drug, Alcohol and Illegal Items Policy attached hereto as Exhibit III and meets or exceeds the requirements of any applicable law or regulation. Complete records of the anti-drug program shall be kept at Contractor's and each subcontractor's home office, respectively, and be available for audit by Company during regular office hours. Failure or refusal by Contractor or a subcontractor to establish and maintain a satisfactory anti-drug program, keep adequate records of it, or permit Company to audit compliance with it shall be grounds for immediate suspension of Contractor's and its subcontractors authorization to proceed with Work or termination of this Contract.

D. Before performing Work at any Operational Facility, Contractor and each subcontractor shall certify to Company in a writing signed by an authorized representative of the employer that each employee (identified by name, employee I.D. number and date of drug screen result) who will perform Work at the Operational Facility has a current negative drug screen result under the employer's anti-drug program. Such certification shall be kept current throughout the duration of the Work, and notice of any change in an employee's certified status shall be given by the employer to Company in writing immediately. Company may exclude from Operational Facilities any Contractor or subcontractor employee who does not have a current certification, and any delay in the performance of Work due to lack of properly certified employees will be for the account of Contractor.

E. On any pipeline or other DOT-regulated work, Contractor and its subcontractors shall also furnish Company with written certification of current random pool list and each employee's most recent negative drug screen results under DOT regulations.

XIII. INSURANCE A. Contractor, at its own expense, shall provide and maintain in force with insurance companies acceptable to Company the kinds of insurance and minimum amounts of coverage set forth in paragraph B, below, to cover all loss and liability for damages on account of bodily injury, including death, and damage to or destruction of property caused by or arising from

any and all activities carried on or any and all Work performed under any Agreement. Contractor shall cause its insurer to name Certificate Holder as an additional insured on its Auto, General and Excess Liability insurance policies and grant Certificate Holder a waiver of subrogation on its Workers= Compensation insurance policy. "Certificate Holder" shall have the meaning provided in the Certificate Holder Definition in Exhibit IV. If Contractor fails or refuses to carry out any of the provisions of this Article XIII, Company shall, in addition to any right to recover damages or obtain other relief, have the right to suspend Contractor's authorization to proceed with Work or terminate this Contract.

B. 1) WORKERS= COMPENSATION (Including Occupational Disease) and EMPLOYER'S LIABILITY INSURANCE. Contractor's Workers= Compensation and Employer's Liability coverages shall apply to all employees, including borrowed servants, in accordance with the benefits afforded by the statutory Worker's Compensation Acts, USL & H and Maritime Acts applicable to the State, Territory or District of hire, supervision or place of accident. A waiver of subrogation to Certificate Holder is required. Policy limits shall not be less than:

Worker's Compensation: Statutory Limits.
Employer's Liability: $500,000, each accident; $500,000 Disease, policy limit; $500,000 Disease, each employee.

2) COMMERCIAL GENERAL LIABILITY INSURANCE, as primary policy over all others, covering premises, operations, products and completed operations, independent Contractors, and blanket contractual liability. The policy shall cover all liabilities arising out of explosion, collapse and underground ("XCU") hazards. The policy shall provide broad-form property damage, including completed operations, coverage. An "additional insured" endorsement naming Certificate Holder is required. Policy limits shall not be less than:

Bodily Injury: $500,000 per occurrence, $1 million aggregate.
Property Damage: $500,000 per occurrence, $1 million aggregate.
OR Combined Single Limit (CSL) of $1 million per occurrence, $2 million aggregate.

3) COMPREHENSIVE-AUTOMOBILE LIABILITY INSURANCE, as primary policy over all others, covering all owned, hired and non-owned automotive equipment. An "additional insured" endorsement naming Certificate Holder is required. Policy limits shall not be less than:

Bodily Injury: $500,000 per person, $500,000 per occurrence/accident.
Property Damage: $500,000 per occurrence.
OR Combined Single Limit of $1 million per occurrence.

4) EXCESS/UMBRELLA LIABILITY INSURANCE, to be primary excess over all others:

☒ $5 million

5) Additional insurance and surety limits:

a) ☒ NONE REQUIRED.

b) ☐ ALL-RISK BUILDER'S RISK POLICY with limits of $_____, Minimum Deductible $_____.

c) ☐ CONTRACTOR'S EQUIPMENT FLOATER POLICY

d) ☐ OWNER/CONTRACTOR'S PROTECTIVE LIABILITY POLICY with minimum limits of $500,000 CSL.

e) ☐ CRANE COVERAGE -- LIFTER'S LIABILITY POLICY with limits of $500,000 CSL.

f) ☐ PROFESSIONAL LIABILITY INSURANCE covering acts, errors, omissions, malpractice, as applicable, potentially arising from or pertaining to any Work to be performed by Contractor, its employees, agents or subcontractors; policy limits shall not be less than $1 million per occurrence/claim; OR in lieu of such insurance, Contractor may furnish an irrevocable letter of credit in form and amount and with an issuer satisfactory to Company.

g) ☐ PERFORMANCE AND MAINTENANCE BOND. Upon execution of this Contract and prior to commencing performance hereunder, Contractor shall execute, with a surety Company satisfactory to Company, a Surety Bond to guarantee completion of the Work within the time provided, the payment of all claims and the fulfillment of all obligations arising, either directly or indirectly, under any Agreement, including but not limited to the defense of all litigation incidental to any Agreement to which Certificate Holder is made a party. The surety limits shall be not less than one hundred percent (100%) of the total estimated contract price or as agreed to by Company. In lieu of such surety bond, Contractor may cause to be issued an irrevocable letter of credit payable to the order of Company in such amount, in a form and with an issuer acceptable to Company; or, if acceptable to Company, Contractor may use a combination of surety bond, letter of credit, or corporate or personal guaranty.

C. Contractor's insurance policies shall be endorsed as follows and in accordance with state law:

Worker's Compensation policy:

1) Blanket waiver of subrogation, OR 2) "The Insurers hereby waive their rights of subrogation against Certificate Holder and any individual, firm, or corporation, their subsidiaries, factors or assigns for whom or with whom the Assured may be working."

Primary General, Auto and Excess Liability Policies:

1) Blanket additional insured endorsement, OR 2) the Form of Additional Insured Endorsement in Exhibit IV.

D. Contractor represents and warrants that at all times during the term of this Contract it shall have furnished or caused to be furnished to Company an original, current certificate of insurance on forms acceptable to Company (most recent ACORD form) reflecting:

1) The kinds and amounts of insurance required above.
2) The insurance Company or companies carrying the required coverages.
3) The policy number and the effective and expiration dates of each policy.
4) That Certificate Holder will be given thirty (30)-day prior written notice of any material change in or termination of any policy.
5) That a waiver of subrogation under Contractor's Worker's Compensation policy has been issued to Certificate Holder.
6) That Certificate Holder has been named as an "Additional Insured" on Contractor's primary Auto & General Liability policies and Excess/Umbrella policies.
7) A Certificate Holder notation reading as shown in the Form of Certificate Holder Notation in Exhibit IV.

E. All policies shall provide that the insurance Company will notify Certificate Holder not less than thirty (30) days prior to the termination of any policy and before any changes are made which restrict or reduce the coverage provided or change the name of the insured.

F. Contractor shall require each of its subcontractors to provide the foregoing coverages as well as any other coverages that Contractor may consider necessary, all to be endorsed with the above-specified waiver of subrogation and additional insured wording; and any deficiency in the coverages, policy limits or endorsements of said subcontractors will be the sole responsibility of Contractor.

G. It is understood and agreed by Contractor and Company that the coverages granted to the Certificate Holder "additional insured" in Contractor's policies of insurance as required in this Contract are to apply on a primary basis over all other valid and collectible insurance owned by and or available to the "additional insured." It is further understood and agreed by Contractor and Company that such coverages provided by Contractor to the "additional insured" are applicable to liability associated with the operations, products, completed operations, premises, equipment and or vehicles contemplated by this Contract. Contractor shall be solely responsible for any deductible or self-insured retention associated with the coverages granted to the Aadditional insured.6

XIV. INDEMNITY **EXCEPT AS EXPRESSLY LIMITED IN THIS CONTRACT, CONTRACTOR SHALL INDEMNIFY, DEFEND AND HOLD HARMLESS COMPANY, ITS DIRECTORS, OFFICERS, AGENTS AND EMPLOYEES AND THEIR SUCCESSORS, HEIRS AND ASSIGNS ("INDEMNIFIED PARTIES") FROM AND AGAINST ANY AND ALL CLAIMS, LOSSES, DAMAGES, CAUSES OF ACTION, SUITS, AND LIABILITY OF EVERY KIND AND CHARACTER (INCLUDING, BUT NOT LIMITED TO, ALL COSTS OF DEFENSE, SETTLEMENT AND REASONABLE ATTORNEY'S FEES) ("CLAIMS") RELATING TO, ARISING OUT OF OR INCIDENTAL TO ANY AGREEMENT OR SERVICES TO BE PROVIDED UNDER ANY AGREEMENT (REGARDLESS OF WHETHER SUCH SERVICES ARE LISTED OR NOT LISTED ON EXHIBIT I) WHICH MAY BE ASSERTED BY ANY THIRD PARTY, GOVERNMENTAL AGENCY OR ENTITY, CONTRACTOR, OR CONTRACTOR'S EMPLOYEES, AGENTS, CONTRACTORS, SUBCONTRACTORS OR THEIR EMPLOYEES OR AGENTS. THIS DUTY OF INDEMNIFICATION INCLUDES, BUT IS NOT LIMITED TO, CLAIMS RELATING TO OR ARISING OUT OF BREACH OF CONTRACT, DEATH, PERSONAL INJURY, PROPERTY DAMAGE OR LOSS (INCLUDING, WITHOUT LIMITATION, POLLUTION OR ENVIRONMENTAL DAMAGE), ANY THEORY OF STRICT LIABILITY, AND ANY CIVIL OR CRIMINAL FINES OR PENALTIES RELATING TO OR ARISING UNDER ANY CLAIM. WHERE A CLAIM IS THE RESULT OF THE JOINT OR CONCURRING NEGLIGENCE OF CONTRACTOR AND AN INDEMNIFIED PARTY, CONTRACTOR'S DUTY OF INDEMNIFICATION AS SET FORTH IN THIS ARTICLE XIV SHALL BE IN PROPORTION TO ITS ALLOCABLE SHARE OF SUCH JOINT OR CONCURRING NEGLIGENCE.**

In no event shall Contractor or Company be liable to the other for any loss of income or anticipated profits or loss of use of equipment or facilities caused by or arising from the performance of Work under this Contract; provided, however, this limitation shall not apply to the extent that such damage is in any manner covered by and/or insured by a) Contractor's or

any subContractor's policies of insurance, bonds or letters of credit required to be provided, carried and maintained pursuant to this Agreement or otherwise or b) policies of insurance naming Company or Contractor as certificate holder, named insured or additional insured, ; and, provided, further, if Company pays or owes to any person or entity that is not an affiliate of Contractor any costs, expenses or damages (including, without limitation, indirect, special, consequential, incidental, exemplary, punitive actual, direct and other damages) in settlement or satisfaction of any Claim and such costs expenses or damages are covered by any Contractor indemnity to Company under this Agreement, then Company may recover such costs, expenses or damages from Contractor.

XV. PATENTS AND LICENSES A. Contractor represents and warrants that the use or construction of any and all tools, equipment and processes furnished by Contractor and used in any Work does not and shall not infringe on any license or patent which has been issued or applied for; and, in addition to all other indemnifying provisions contained in this Contract, Contractor agrees to indemnify, defend and hold Company harmless from any and all claims, demands, and causes of action of every kind and character in favor of or made by any patentee, licensee or claimant of any right or priority to such tool, equipment or process, or the use or construction thereof, which may result from or arise out of furnishing or use of any such tool, equipment, or process by Contractor.

B. Contractor warrants that it has obtained, or will obtain, an assignment of any original work of authorship created by any of its employees or independent Contractors during the performance by Contractor of its duties and obligations under any Agreement. Contractor further warrants that it will disclose such original works of authorship to Company on a timely basis and will timely assign such rights to Company.

C. Contractor warrants that it has obtained, or will obtain, from its employees and independent Contractors an assignment of all rights in any new and useful process, machine, manufacture or composition of matter, and any new and useful improvement thereof made by any of them in the course of the performance of Contractor's duties and obligations under any Agreement. Contractor further warrants that it will promptly disclose any new and useful process, machine, manufacture or composition of matter and any new and useful improvement thereof made by any of its employees or independent Contractors in the course of the performance of Contractor's duties and obligations under any Agreement and will assign such rights to Company on demand.

XVI. SURVIVAL As part of the consideration for this Contract, Contractor hereby agrees that its provisions concerning indemnity, warranty, waiver of subrogation and patent infringement shall extend to and be enforceable by and shall inure to the benefit of any owner, joint owner, co-venturer, operator or non-operator for which Company is acting and shall survive completion of any Work and the termination of this Contract.

XVII. SUBCONTRACTING A. No subcontract may be awarded by Contractor unless approved in advance by Company in writing. Contractor shall be and remain primarily liable for all obligations assumed by Contractor under this Contract. Contractor's subcontracting of any portion of the Work shall not release or relieve Contractor from any obligation or liability under any Agreement. Contractor shall furnish Company with a true and complete copy of each subcontract awarded by Contractor within five (5) days after such subcontract is executed. Contractor shall oversee and be responsible for the performance of its subcontractors and keep accurate books, records and accounts and furnish such reports and information as Company may request relative to subcontracts.

B. Contractor represents and warrants that, prior to entry on Company's premises: 1) each subcontractor shall be given a copy of this Contract and any related Agreement (provided, however, Contractor may strike out or delete provisions pertaining to its compensation), 2) each subcontractor shall be familiar with each Contract term and condition, and 3) each subcontractor shall agree, to the extent of its respective portions of the Work, to perform fully each Contract term and condition.

XVIII. DEFAULT If Contractor breaches any warranty contained in any Agreement, or if any of Contractor's representations contained in any Agreement shall be found to be false, or if Contractor fails to prosecute the Work, or fails to make the progress set forth in any Agreement, or fails to pay any indebtedness when due, or fails to perform any of the conditions of or obligations assumed under any Agreement, or becomes insolvent, or if any voluntary or involuntary proceedings are instituted by or against Contractor in bankruptcy or insolvency, or if a receiver, trustee or assignee is appointed for the benefit of creditors of Contractor ("Events of Default"), Company may, if it so elects and without prejudice to any other rights or remedies it may have in law or equity:

1) suspend Contractor's authorization to proceed with Work,
2) remove Contractor from Company's Approved Contractor List,
3) terminate this Contract or any Agreement,
4) suspend payment in whole or in part under any Agreement until the Event of Default has been remedied, and/or,
5) take the Work remaining to be completed wholly or partly out of the hands of Contractor or any other person in whose hands or possession the Work or any part of it may be, in which event Company may award such Work to another Contractor. Contractor in such event, in the manner and to the extent directed by Company, and only to such extent, shall assign to Company all of the rights of Contractor under its work orders, purchase orders and subcontracts relating to the Work.

XIX. TERMINATION Either party may terminate this Contract by giving the other party thirty (30)-day prior written notice, but neither party shall, by the termination of this Contract, be relieved of its respective obligations and liabilities arising from or incidental to Work performed prior to termination. Except as expressly provided in this Contract, it may not be terminated during the performance of any Agreement.

XX. FORCE MAJEURE If either party is rendered unable, wholly or in part, by force majeure to carry out its obligations under any Agreement, then on such party giving notice and full particulars of such force majeure in writing to the other party as soon as practicable after the occurrence of the cause relied on, then the obligation of the party giving such notice, so far and only insofar as affected by such force majeure, shall be suspended during the continuance of any inability so caused, but for no longer period, and such cause shall be remedied with all reasonable dispatch. "Force majeure" means acts of God, strikes, lockouts or labor disputes involving a general stoppage of Work on the job, civil disturbance, military action, rules, regulations, orders or acts of governmental authority, or other similar causes beyond the control of Company or Contractor. The requirement that events of force majeure be remedied with all reasonable dispatch shall not require the settlement of labor matters when such course is inadvisable in the judgment of the party having the difficulty.

XXI. ENTIRE AGREEMENT This Contract and any Agreement represent the entire agreement of the parties. No provision of any delivery ticket, invoice or other instrument used by Contractor in describing any Work shall supersede the provisions of any Agreement. The terms of this Contract shall prevail over conflicting terms of any Agreement or Work order, oral or written.

XXII. TIME OF THE ESSENCE Time is expressly declared to be of the essence of all Agreements.

XXIII. NON-WAIVER No election by Company under this Contract shall constitute a waiver of any other rights or remedies available to it at law or in equity. Neither waiver by Company nor any amendment of any of the terms, provisions, or conditions of any Agreement shall be effective unless in writing and signed by an authorized representative of Company.

XXIV. NOTICES All notices to be given with respect to this Contract and any Agreement shall be given to Company and to Contractor, respectively, at the address first above written and shall be in writing, postage or delivery charges prepaid. All notices shall be effective upon actual receipt or refusal of delivery by the party to whom given. All sums due to Contractor under any Agreement shall be payable at 1100 Louisiana, Houston, Harris County, Texas 77002.

XXV. ASSIGNMENT This Contract shall inure to the benefit of the parties, their successors and assigns. No Agreement or any payment accruing under it is assignable by Contractor, nor may it be pledged by Contractor as security without the prior written consent of Company. Company may assign this Contract without limitation.

XXVI. GOVERNING LAW This Contract and all Agreements are and shall be deemed to be made and delivered in Harris County, Texas, and shall be governed by and construed in accordance with the law of the State of Texas, without regard for its principles of conflicts of laws. Any legal action arising under this Contract shall be brought in the courts of the State of Texas or of the United States for the Southern District of Texas, Houston Division, to which venue and non-exclusive jurisdiction each party expressly consents for itself and in respect of its property for all purposes.

XXVII. DISPUTES If Company and Contractor have a dispute under any Agreement, they both undertake to explore, in good faith, resolution of the dispute through negotiation, mediation or similar alternative dispute resolution techniques prior to filing litigation. If any litigation or other formal proceeding must be filed by either party to preserve its rights under a statute of limitations or other legal deadline during the pendency of any alternative dispute resolution technique, the party filing such action will not require the other party to answer (if such delay is permitted by applicable rules) and will do all that is otherwise necessary to stay the action until the pending alternative resolution technique is terminated. If either party believes the dispute is not suitable for such alternative dispute resolution techniques, or if such techniques do not produce results satisfactory to the parties, either party may proceed with litigation. If the parties are unable to resolve any dispute by the alternative dispute resolution techniques described above and either party proceeds with litigation, the losing party shall pay the prevailing party's reasonable attorneys' fees, costs and necessary disbursements in addition to any relief that a court may grant.

XXVIII. AUTHORIZED REPRESENTATIVE Contractor represents and warrants that the person executing this Contract and any Agreement on behalf of Contractor is a duly authorized representative of Contractor and is vested with full authority to bind Contractor.

XXIX. CONFIDENTIAL INFORMATION A. All information concerning the business, customers, products, processes and trade secret information of Company ("Confidential Information") which may come into the possession of Contractor during the course of the negotiation or performance of this Contract or any Agreement is confidential to Company, shall be used by Contractor for the sole purpose of providing services to Company under this Contract and shall not be disclosed by Contractor to any third party without the prior written consent of Company. All Confidential Information shall become and remain the property of Company and shall be deemed to have been entrusted to Contractor only for the limited purposes of this Contract, and Contractor will not, without the prior written consent of Company use, reproduce or copy, or permit the use, reproduction or copying of any Confidential Information; provided, however, Contractor may make adequate reproductions and copies for the purpose of carrying out the Work. All Confidential Information received or created by Contractor and any reproductions or copies thereof made by Contractor shall be delivered to Company at any time prior to termination of this Contract at the request of Company and shall be delivered to Company immediately upon termination of this Contract. Nothing contained in this Contract or in any disclosures made by Company under it shall be construed to grant to Contractor any license or other rights of Company in or to Confidential Information or under any copyright or patent which has been or may in the future be issued with respect to Confidential Information.

B. Contractor will not be bound by the provisions of this Article XXIX with respect to information which:

(1) was available to the public prior to receipt of such information by Contractor pursuant to any Agreement; or

(2) becomes available to the public subsequent to receipt of such information by Contractor pursuant to any Agreement and through no fault of Contractor; or

(3) was already in Contractor's possession and not acquired, either directly or indirectly, from Company under an obligation of confidentiality; or

(4) subsequently is obtained from a third party who is lawfully in possession of such information and who is not under a contractual or fiduciary obligation to Company or another person with respect to such information.

XXX. TENSE, GENDER AND NUMBER. Unless expressly provided otherwise, the use in this Contract of the past, present or future tense shall include the others, the masculine, feminine or neuter gender shall include the others, and the singular or plural number shall include the other.

XXXI CONSTRUCTION. The titles to the articles of this Contract are for the convenience of the parties, only; they are not a part of the Contract and shall have no effect in the construction or interpretation of it. In the event of a dispute over the meaning or application of any Agreement, it shall be construed fairly and reasonably and neither more strongly for nor against either party.

XXXII EXHIBITS. The Exhibits checked below and attached to this Contract are incorporated in and made a part of it for all purposes:

_X_	Exhibit I	Scope of Work
_X_	Exhibit II	Price & Invoicing
_X_	Exhibit III	Drug, Alcohol & Illegal Items Policy
_X_	Exhibit IV	Insurance
___	Exhibit V	Schedule
___	Exhibit VI	Drawings & Attachments
___	Exhibit VII	General Requirements
___	Exhibit VIII	Consultant Terms & Conditions
___	Exhibit IX	Purchase Terms & Conditions

In the event of any conflict between the foregoing terms of this Contract and the Exhibits, the foregoing terms shall prevail.

EPCO HOLDINGS, INC.

By: _____

Title: Senior Vice President

ANDERSON POLLUTION CONTROL, INC.

By: Thomas Anderson

Title: Asst / Treasurer

EXHIBIT I

SCOPE OF WORK

Contractor's Work will be: **TO PERFORM ENVIRONMENTAL CLEANUP, EMERGENCY RESPONSE, REMEDIATION SERVICES, AND PIPELINE MAINTENANCE.**

EXHIBIT II

PRICE AND INVOICING

TO BE DETERMINED AT THE TIME THE ORDER IS PLACED.

EXHIBIT III

EPCO HOLDINGS, INC.
POLICY

ILLEGAL AND UNAUTHORIZED ITEMS AT OPERATIONAL FACILITIES AND IN OPERATIONAL VEHICLES

Company is committed to providing a safe working environment for its employees, visitors, and contract personnel. THE POSSESSION, USE, SALE, TRANSFER, RECEIPT OR PRESENCE AND BEING UNDER THE INFLUENCE OF DANGEROUS DRUGS OR CONTROLLED SUBSTANCES (EXCEPT AS LAWFULLY PRESCRIBED FOR THE PERSON IN POSSESSION), DRUG PARAPHERNALIA OR ALCOHOLIC BEVERAGES ARE FORBIDDEN AT, UPON OR WITHIN COMPANY OPERATIONAL FACILITIES AND OPERATIONAL VEHICLES.

Operational facilities include the entire premises of all terminals, processing plants, loading racks, pipelines, storage, warehouses, garages, shops, field worksites and retail locations. Operational vehicles include all vehicles (tractors, trailers, transports and pickups) bearing an external company name, logo, trade name, trademark or placard. Dangerous drugs include all drugs and devices, which are prohibited by Federal or State law from being dispensed without a prescription. Controlled substances include cocaine, marijuana, narcotics and all other drugs and materials which are controlled under Federal or State law. Drug paraphernalia includes roach clips, gram scales and any other property or material, which Company deems is intended or has been adapted or modified for drug use. Alcoholic beverages include liquor, beer and wine, except liquor, beer and wine stored in passenger vehicles. "Under the influence" means having detectable levels of dangerous drugs, controlled substances or alcohol in the breath, blood or urine.

Employees will not be permitted to work while under the influence of drugs or alcohol. Individuals who appear to be unfit for duty will be released from duty and may be subject to a physical examination at a designated medical facility. Refusal to comply with a fitness-for-duty examination may result in disciplinary action up to and including DISCHARGE.

Any employee who uses or is found to be in possession or under the influence of these illegal or unauthorized items at, upon or within these Company facilities or vehicles will be relieved from duty immediately and subject to disciplinary action up to and including DISCHARGE. Others who use or are found to be in possession or under the influence of such items at, upon or within these Company facilities or vehicles will be removed from Company's vehicles and facilities and denied future admission to Company property.

Company reserves the right to search, inspect and submit to laboratory testing persons and property found at, upon or within Company facilities or vehicles. Entry onto operational facilities or vehicles constitutes consent to searches or inspections. Any employee who refuses to submit his person or property to search, inspection or testing or who refuses to consent to the release of medical information in connection with a company physical examination or relevant to any accident, injury or incident involving the employee and relating to the safety, health or welfare of the employee, other employees or the public will be relieved from duty immediately and subject to disciplinary action up to and including DISCHARGE; others at, upon or within Company facilities or vehicles who refuse to submit their persons or property to search, inspection or testing will be removed from and denied future admission to Company property.

Off-the-job illegal drug use which could adversely affect an employee's job performance or which could jeopardize the safety of other employees, the public, or company facilities, or where such usage adversely affects the public trust in the ability of the company to carry out its responsibilities, is also cause for disciplinary action, up to and including DISCHARGE. Employees who are arrested for off-the-job drug activity may be considered in violation of this policy. In deciding what action to take, the company will take into consideration the nature of the charges, the employee's present assignment and record with the company, and the impact of the employee's arrest upon the conduct of the company's business.

Employees who wish to report drug or alcohol use in violation of this policy should contact the appropriate Vice President in charge of their group or the Vice President – Human Resources, directly. The company will make every effort to protect anonymity, and such information will be treated in confidence.

Company requires that all prescriptions and over-the-counter medications at Company operational facilities and Company operational vehicles be in original containers with prescriptions showing the name and doctor of the person in possession. As an employee, you have a responsibility to determine whether or not the use of a legal prescription may present a safety risk at work. You should ensure that your physician is aware of the nature of your job. Employees who feel, or who have been informed, that the use of a legal prescription or over-the-counter medicine may affect the employee's job performance, or may affect the safety of co-workers, members of the public or the employee, must report such drug use to the Safety Department so the Company can evaluate whether the employee may continue to work. The use or being under the influence of any legally prescribed drug or over-the-counter medicine is prohibited to the extent that such use or influence may affect the safety of co-workers or members of the public, the employee's job performance or the safe or efficient operation of the Company's facilities or vehicles.

Comment [1]:

EXHIBIT IV

INSURANCE

1. Certificate Holder Definition

"Certificate Holder" shall mean EPCO Holdings, Inc., Enterprise Products Partners L.P., Enterprise Products Operating L.P., EPCO, Inc., Texas Eastern Products Pipeline Company, LLC and each of their parent, subsidiary and affiliated companies, partners and joint venturers, and each owner or joint owner of any equipment or facility operated by them.

2. Form of Additional Insured Endorsement

It is agreed that such insurance as is afforded by the policy shall apply to EPCO Holdings, Inc., Enterprise Products Partners L.P., Enterprise Products Operating L.P.,, EPCO, Inc., Texas Eastern Products Pipeline Company, LLC and each of their parent, subsidiary and affiliated companies, partners and joint venturers, and each owner or joint owner of any facility operated by one or more of them, as their interests may appear, to whom the named insured is obligated by contract to provide such insurance, but only to the extent of coverage required by such contracts as respects operations performed in connection with the insured and only if such contract was agreed to in writing or orally by the named insured or his/its representatives prior to the occurrence of any loss under such contract.

3. Form of Certificate Holder Notation

EPCO Holdings, Inc. Enterprise Products Partners L.P., Enterprise Products Operating L.P., EPCO, Inc., Texas Eastern Products Pipeline Company, LLC and each of their parent, subsidiary and affiliated companies, partners and joint venturers, and each owner or joint owner of any facility operated by one or more of them, as their interests may appear, arising from the work to be performed under oral or written contract.

P. O. Box 4324
Houston, Texas 77210
Attention: Corporate Risk

4. Additional Terms for Work to be Performed in Louisiana

In all cases where Contractor's employees (defined to include Contractor's direct, borrowed, special or statutory employees) are covered by Louisiana Worker's Compensation Act, LSA-R.S. 23:1021 *et seq.*, Company and Contractor agree that all Work performed by Contractor and its employees pursuant to any Agreement is an integral part of and essential to the ability of Company/Certificate Holder to generate Company/Certificate Holder's goods, products and services, for purposes of LSA-R.S. 23:1061(A)(1). Furthermore, Company and Contractor agree that Company/Certificate Holder is the principal or statutory employer of Contractor's employees; provided, however, this provision is included for the sole purpose of establishing a statutory employer relationship to obtain the benefits of LSA-R.S. 23:1031(C-E) and 23:1061(A) and is not intended to create an employer/employee relationship for any other purpose. Irrespective of Company/Certificate Holder's status as the statutory employer or special employer [as defined in LSA-R.S. 23:1031(C)] of Contractor's employees, Contractor shall remain primarily responsible for the payment of Louisiana worker's compensation benefits to its employees and shall not be entitled to seek contribution for any such payments from Company/Certificate Holder.

Contractor agrees that its worker's compensation insurance and employer's liability insurance policies shall be endorsed to designate Certificate Holder as an alternate employer and as a principal and statutory employer or borrowing employer.

[illegible] (EPOLP Rev 02/00)

10207 FM 1942
P.O. BOX 573
MONT BELVIEU, TEXAS 77580-0573

ENTERPRISE®

May 20, 2004

Garner Environmental Services, Inc.
Attn: Contracts Manager/Bobby
1717 West 13th Street
Deer Park, Texas

281-930-1200

Re: **Contractor/Vendor Approved List**

Bobby:

Here is your company's executed copies of the service agreements. I appreciate all your efforts in helping to set up these agreements. To keep these service agreements in place, please make sure that all insurance certificates are kept current and that all future renewal certificates are sent to:

Enterprise Products Operating LP
Attn Corporate Risk
P O Box 4324
Houston, TX 77210

Thanks again for your assistance. If you have any questions, please call. My telephone number is 281-385-4346.

Sincerely,

Jeanette Cassell
Service Agreement Coordinator

Enclosures

APPENDIX III

EPA APPENDICES

This appendix contains the following:

- ☒ EPA Hazard Evaluation
- ☒EPA Appendix C – Substantial Harm Criteria
- ☒EPA Appendix D – Determination of Worst Case Discharge Planning Volume
- ☒EPA Appendix E Required Resources and Attachments
- ☒EPA Appendix F Model Plan - Cross Reference to this USCG Format
- ❑ Other: _____
- ❑ Other: _____

Date of Manual Entries into this Appendix	***Comments and/or Content***

- ❑ If excess material from this Appendix is kept in a file instead of behind this tab, please complete the following:

Name of file: _____

Storage location: _____

Dates covered: _____

Contents: _____

HAZARD EVALUATION

[AS REQUIRED BY 40 CFR 112.20(H)(4)]

(c) HAZARD EVALUATION [40 CFR 112.20(h)(4)]

40 CFR Part 112.20 Appendix F, §1.4.1 Hazard Identification
Note: The facility maintains no surface impoundments, only aboveground tanks (ASTs). A detailed tank inventory is maintained in the facility SPCC Plan under separate cover.

Hazard Identification – Processes

A spill could potentially result from the following activities:

Loading the AST. A transfer operation due to mechanical failure or human factors is always a possibility. Such an accident would most likely result in a small or medium release.

Day-to-Day Activities. This facility does not conduct a large number of intra-terminal transfers, because it is not a manufacturing facility. Day-to-day activities are usually limited to loading and unloading transfers.

Secondary Containment Volume – Discussed in this document section 40 CFR 12 part 154.1035(b)(2)(ii).

Normal Daily Throughput Considerations. Daily throughput varies widely at the facility. Depending on the type of activity, up to 50,000 barrels can be transferred in a single transfer to the tank farm.

Appendix F, § 1.4.2 Vulnerability Analysis

Information for this section obtained primarily from the TGLO spill response map series referenced elsewhere in this FRP.

Planning Distances
Relevant observations:

- The area in which the facility is located is not tidally influenced. Section 4.0 Oil Transport and Tidal Influence Areas to Appendix C of 10 CFR 112 states a **15 mile** planning distance upstream and downstream of a facility is provided for a tidally influenced area. This is not applicable at this site.
- Attachment III to Appendix C (Calculation of Planning distance) states that calculation of a planning distance is required unless it is clear that fish and wildlife sensitive environments and public drinking water intakes would be affected. Public drinking water intakes are not located within a vulnerable distance and therefore no distance calculations were completed.

1.4.3 Analysis of the Potential for an Oil Spill

The facility is committed to responding with full manpower and resources to any spills that occur in their facility. Oil spills are always a possibility when transferring large quantities of oil. The systems that are in place, both with respect to manpower, response planning, training and automation of the transfer system, showed work to minimize the potential for spill.

1.4.4 Facility Reportable Oil Spill History

There have been no reportable oil spills under this operator or under previous operators or owners at this facility.

SUBSTANTIAL HARM CRITERIA

[AS REQUIRED BY APPENDIX C OF 40 CFR 112]

SUBSTANTIAL HARM CRITERIA [40 CFR 112.20(e) and APPENDIX C TO PART 112 SUBCHAPTER D]

IF...	THEN...
All answers are **NO** below	FEDERAL SPILL RESPONSE PLANNING REQUIREMENTS ARE MET WITH THE SPCC PLAN ALONE.
Any answer is **YES** below	THE FACILITY MUST ALSO COMPLY WITH THE FACILITY RESPONSE PLAN (FRP; 40 CFR 112.20)

Does the facility: • Transfer oil over water to or from vessels AND • Does the facility have a total oil storage capacity greater than or equal to 42,000 gallons?	**NO**
Does the facility have: • A total oil storage capacity greater than or equal to 1 million gallons AND • Within any storage area, does the facility lack **secondary containment** that is sufficiently large to contain the capacity of the largest AST plus sufficient freeboard to allow for precipitation?	**NO**
Does the facility have: • A total oil storage capacity greater than or equal to 1 million gallons AND • Is the facility located at a distance (as calculated using the appropriate formula in Attachment C-III to this Appendix or a comparable formula) such that a discharge from the facility **could cause injury to fish and wildlife sensitive environments?**	**YES**
Does the facility have: • A total oil storage capacity greater than or equal to 1 million gallons AND • Is the facility located at a distance (as calculated using the appropriate formula in Attachment C-III to this Appendix or a comparable formula) such that a discharge from the facility would shut down a **public drinking water intake**?	**NO**
Does the facility have: • A total oil storage capacity greater than or equal to 1 million gallons AND • Has the facility experienced a **reportable oil spill in an amount greater than or equal to 10,000 gallons within the past 5 years?**	**NO**

CERTIFICATION

I certify under penalty of law that I have personally examined and am familiar with the information submitted in this document, and that based on my inquiry of those individuals responsible for obtaining information, I believe that the submitted information is true, accurate, and complete.

Signature: _____ Date: 5/24/2012

Name: Robert E. Moss Title: Vice President, Houston Region Operations

DETERMINATION OF WORST CASE DISCHARGE PLANNING VOLUME

[AS REQUIRED BY APPENDIX D TO 40 CFR PART 112]

DETERMINATION AND EVALUATION OF REQUIRED RESPONSE RESOURCES FOR FACILITY RESPONSE PLANS [AS REQUIRED BY APPENDIX E OF 40 CFR PART 112]

Provided in Section 33 CFR 154.1035(b)(2)(i)(D)

Page 8 of this plan

FACILITY SPECIFIC RESPONSE PLAN (MODEL PLAN)

[AS REQUIRED BY APPENDIX F OF 40 CFR 112]

EPA Model Plan Cross Reference [Appendix F to 40 CFR 112 Subpart D]

EPA Format:	This Plan Format:
1.1 Emergency Response Action Plan (ERAP)	Front of FRP
1.2 Facility Information	Introduction and Plan Content, Page 1
1.3 Emergency Response Notification	
1.3.1 Notification	ERAP, Page 3
1.3.2 Response Equipment List	ERAP, Page 13, 14
1.3.4 Response Equipment Testing/Deployment	Page 25
1.3.4 Personnel	ERAP, Page 14, 15
1.3.5 Evacuation Plans	Page 26 (Site Specific Health & Safety Plan)
1.3.6 QI's Duties	ERAP, Page 12 - 13
1.4 Hazard Evaluation	
1.4.1 Hazard ID	Appendix III
1.4.2 Vulnerability Analysis	Appendix III
1.4.3 Analysis of Potential for an Oil Spill	Appendix III
1.4.4 Facility Reportable Oil Spill History	Appendix VI
1.5 Discharge Scenarios	
1.5.1 Small and Medium Discharges	ERAP, Page 5
1.5.2 Worst Case Discharge	ERAP Pages 6 - 9
1.6 Discharge Detection Systems	
1.6.1 Discharge Detection by Personnel	SPCC under separate cover
1.6.2 Automated Discharge Detection	SPCC under separate cover
1.7 Plan Implementation	
1.7.1 Response Resources for Small, Medium, & Worst-Case	ERAP, Page 12 - 15
1.7.2 Disposal Plans	ERAP, Page 18
1.7.3 Containment and Drainage Planning	SPCC under separate cover
1.8 Self-Inspection, Drills/Exercises, and Response Training	
1.8.1 Facility Self-Inspection	
1.8.1.1 Tank Inspection	SPCC under separate cover
1.8.1.2 Response Equipment Inspection	Appendices Page 25
1.8.1.3 Secondary Containment Inspection	SPCC under separate cover
1.8.2 Facility Drills/Exercises	
1.8.2.1 QI Notification Drill Logs	Appendix XI
1.8.2.2 Spill Team Tabletop Exercise Logs	all logs = Appendix XI
1.8.3 Response Training	
1.8.3.1 Personnel Response Training Logs	Training Logs, Appendix XIII
1.8.3.2 Discharge Prevention Meeting Logs	Training Logs, Appendix XIII
1.9 Diagrams	ERAP, Appendix VII
1.10 Security	Introduction, Page 1
2.0 Response Plan Cover Sheet	Cover Sheets
3.0 Acronyms	Appendices Pages 26 - 27
4.0 References	n/a

INTRODUCTION

The facility is classified as a "Transportation Related Onshore Facility" which operates in a NON-Higher Volume Port Area.

Non-Transportation Related Onshore Facilities must perform discharge calculations for the U.S. Environmental Protection Agency (EPA). The EPA discharge volume calculations are described as follows:

EPA Discharge Volume Calculations

- **Worst Case Discharge**
  100% of the largest single tank and/or the flow rate of pipeline pumps from underground storage for the maximum detection and shutdown time

- **Medium Discharge**
  Discharge greater than 2,100 gallons (50 Bbls) and less than or equal to 36,000 gallons (857 Bbls) or 10% of the capacity of the largest tank, whichever is less and not to exceed the WCD

- **Small Discharge**
  Discharge of less than or equal to 2,100 gallons (50 Bbls), not to exceed the WCD

Scenario Types

The occurrence of Small Discharge (SD), Medium Discharge (MD), or Worst Case Discharge (WCD) could be the result of any number of scenarios at the Facility including:

- Tank/cavern overfill and/or failure,
- Piping rupture,
- Piping leak, under pressure and not under pressure,
- Explosion or fire,
- Equipment failure (e.g. pumping system failure, relief valve failure, or other general equipment relevant to operational activities associated with internal or external facility transfers).

Response Capability Scenarios

Small Discharge = 50 Bbls
An example of a scenario that could potentially produce approximately 50 Bbls of natural gasoline: A leak that develops in the pipeline in the vicinity of the brine ponds. The brine can be corrosive to the pipe and a small hole has the potential to be undetected. ***Response Requirement*** The Facility shall identify sufficient resources, by contract or other approved means, to respond to a small discharge. The response resources shall, as appropriate, include: • Oil recovery devices with an effective daily recovery capacity equip to the amount of oil discharged in a Small Discharge or greater which is available at the Facility within two (2) hours of the detection of an oil discharge. • Oil storage capacity for recovered oily material equivalent to twice the effective daily recovery rate.
Facility Response Resources/Capability The Facility will respond to a Small Discharge with the manpower detailed in Appendix IX as well as local contract resources as detailed in Appendix II. • A 50 Bbl discharge typically will not escape the containment of the Facility. • If a fifty (50) barrel discharge escaped the Facility it would flow along natural drainage routes. If vapor conditions permit, response personnel would block the drainage routes (i.e. utilizing earth dikes) and attempt product recovery with vacuum trucks. The effectiveness of this would depend on the extent of stormwater run-off. • Product that could not be stopped in this manner would continue to flow along natural drainage routes and be recovered when weather conditions allow. • Oil containment and recovery devices can be secured from Enterprise and contract resources (with a minimum effective daily recovery capacity of 50 Bbls) and can be implemented at the Facility as the situation demands. • A minimum of 100 Bbls of oil storage capacity for recovered oily material can be secured from contract resources or made available within the Facility's storage facilities, as the situation demands. • Additional recovery and storage equipment may be secured by contract resources, as the situation demands.
Notes:

Response Capability Scenarios

Medium Discharge = 100 Bbls
An example that could produce a medium discharge of natural gasoline is a seal failure at the well pump. ***Response Requirement*** The Facility shall identify sufficient resources, by contract or other approved means, to respond to a medium discharge. The response resources shall, as appropriate, include: • Oil recovery devices with an effective daily recovery capacity equip to 50% of the Medium Discharge volume must be capable of arriving on scene within 12 hours. • Sufficient quantity of containment boom must arrive within 12 hours for oil collection and containment and for protection of fish and wildlife and sensitive environments, as appropriate. • Temporary storage capacity equal to or twice the daily recovery capacity must be available.
Facility Response Resources/Capability The Facility will respond to a Medium Discharge with a similar response to the Small Discharge. Additional response resources will be activated from an Oil Spill Removal Organization(s) OSRO) as detailed in Appendix II. • Oil recovery devices with an effective daily recovery capacity of 50 Bbls (50% of the Medium Discharge volume) secured from the OSRO(s) will be on scene within 12 hours. • 100 Bbls of oil storage capacity for recovered oily material will be secured from the OSRO(s) and/or made available within the Facility's storage facilities. • Containment boom for oil collection and containment and for protection of fish and wildlife and sensitive areas will be secured from the OSRO(s) in the event that the spill escapes the boundaries of the Facility and impacts the storm sewer collection basins.
Notes:

Response Capability Scenarios

Worst Case Discharge = 336 Bbls

Response Requirement

The Facility shall identify sufficient resources, by contract or other approved means, to respond to a worst case discharge to the maximum extent practicable. The response resources shall, as appropriate, include:

- All resources shall be capable of arriving at the Facility within the applicable response tier requirements (Tier 1 = 12 hours; Tier 2 = 36 hours; Tier 3 = 60 hours).
- Oil recovery devices with an effective daily recover capacity equal to the lesser of 50% of the WCD or the response caps. If the daily recovery rate exceed the applicable contracting caps (see Table) then the Facility must identify additional resources equal to twice the cap or the amount necessary to reach the calculated planning volume.
- Temporary storage capacity equal to or twice the daily recovery capacity.
- At least 20% of the on-water response equipment should be capable of operating in water of 6 feet or less depth.
- Containment boom for oil collection and containment and for protection of areas of environmental sensitivity or economic importance.
- Identify resources capable of responding to a shoreline clean-up operation involving the calculated volume of oil and emulsified oil that might impact the affected shoreline.

Facility Response Resources/Capability

The Facility will respond to a Worst Case Discharge (WCD) initially with a similar response as identified for a small or medium discharge. Additional OSRO(s) will be activated as the situation demands. The response resources will be capable of arriving within the required response tiers and will include:

- Oil recovery devices with an effective daily recovery capacity equal to the lesser of 50% of the WCD or the response caps will be secured from the OSRO(s) and other Enterprise resources. Any amount in excess of the required caps will be contracted for and responded to as part of the same response effort.
- Temporary storage capacity equal to twice the daily recovery capacity will be secured from OSRO(s), other Enterprise resources, or made available within the Facility's storage facilities.
- At least 20% of the on-water response equipment secured from the OSRO(s) and other Enterprise resources will be capable of operating in water of 6 feet or less depth.
- Containment boom for oil collection and containment and for protection of fish and wildlife and sensitive environments and socio-economic sensitivities will be secured from the OSRO(s) and other Enterprise resources.
- Resources capable of responding to a shoreline clean-up operation involving the calculated volume of oil and emulsified oil that might impact the shoreline will be secured from the OSRO(s) and other Enterprise resources.

Notes:

Worst Case Discharge Discussion	
Type of Operation:	Wellhead/Pump Failure
Volume of Discharge:	296 Bbls
Material Discharged:	Natural Gasoline (Group 2 Oil)

Likelihood that the discharge will travel offsite:

The Facility has sufficient detection systems on the wellhead and pump stations to detect and shutdown the system within a reasonable amount of time.

In the event a discharge would occur from the wellhead/pump station the escaped product would flow along natural drainage routes into Smith Gully. Smith Gully flows into Cedar Bayou. The shoreline along Smith Gully is steep and overgrown and response would be difficult along the gully except for at the State Highway 146 crossing. Once the spill reached Cedar Bayou, the shoreline is more accessible to response personnel and the spill would be boomed off to prevent further spreading.

The Facility has contracts in place with two (2) OSROs which are based in the Houston Area and capable of responding to the Facility within two (2) hours of notification. The OSROs are familiar with the area and have sufficient resources to contain, recover, and temporarily store the lost product and any extra water that is recovered.

The engineering design of the Facility is such that it will contain most leaks or small spills within the facility boundaries and/or immediate area surrounding the potential source. Under extreme conditions (i.e. gasket failure of a pump) where the pump is allowed to pump freely onto the open ground, the discharge could potentially escape the Facility.

Enterprise, OSRO, and other resources would be utilized to implement containment boom/earthen dike and skimmer/recovery equipment in such a manner to limit the overall impact of the spill on the area surrounding the Facility.

Medium Impacted:	Dry land with drainage into Smith Gully and eventually into Cedar Bayou
Weather Conditions:	Heavy rain and limited visibility

APPENDIX IV

SPCC PLAN

(UNDER SEPARATE COVER)

This appendix contains the following:

- ☒ The SPCC Plan was completed by The WCM Group in 2006 and updated by Enterprise Products Operating LLC. The SPCC Plan is a large volume and may be maintained separately but easily accessible to this document.
- ❑ Other: _____
- ❑ Other: _____

Date of Manual Entries into this Appendix	***Comments and/or Content***

- ❑ If excess material from this Appendix is kept in a file instead of behind this tab, please complete the following:

Name of file: _____
Storage location: _____
Dates covered: _____
Contents: _____

APPENDIX V

FACILITY OSPRA PLANNING ELEMENTS (TGLO)

This appendix contains the following:

- ☒ Information relative to the TGLO waterfront facility certification process (unless a notation is made below to the contrary and the information is kept elsewhere).
- ❑ Other: _____
- ❑ Other: _____

Date of Manual Entries into this Appendix	***Comments and/or Content***
Date of Plan	*This facility is not a waterfront facility.*

- ❑ If excess material from this Appendix is kept in a file instead of behind this tab, please complete the following:

Name of file: _____
Storage location: _____
Dates covered: _____
Contents: _____

APPENDIX VI

HISTORICAL SPILL INFORMATION

This appendix contains the following:

☒ Summary information on any spills that occur at the facility.

Other: _____

❑ Other: _____

Date of Manual Entries into this Appendix	***Comments and/or Content***

❑ If excess material from this Appendix is kept in a file instead of behind this tab, please complete the following:

Name of file: _____
Storage location: _____
Dates covered: _____
Contents: _____

Reportable Oil Spill History

The Facility maintains a separate Oil Spill History file in the Facility office. The Facility's file contains the below listed information to the extent that such information is reasonably identifiable.

- Date of discharge.
- Location of discharge.
- Discharge cause(s).
- Material(s) discharged.
- Amount discharged.
- Amount of discharge that reached navigable waters.
- Amount recovered.
- Effectiveness and capacity of secondary containment.
- Clean-up actions taken.
- Steps taken to reduce possibility of recurrence.
- Total storage capacity of the tank(s) or impoundment(s) from which the material discharged.
- Enforcement actions.
- Effectiveness of monitoring equipment.
- Description of how spill was detected.

Reportable Oil Spill History (Cont'd)

Date of discharge.	
Location of discharge.	
Discharge cause(s).	
Material(s) discharged	
Amount discharged.	
Amount of discharge that reached navigable waters.	
Amount recovered.	
Effectiveness and capacity of secondary containment.	
Clean-up actions taken.	
Steps taken to reduce possibility of recurrence.	
Total storage capacity of the tank(s) or impoundment(s) from which the material discharged.	
Enforcement actions.	
Effectiveness of monitoring equipment.	
Description of how spill was detected.	

APPENDIX VII

FACILITY DIAGRAMS AND AERIAL PHOTOS

This appendix contains the following:

☒ Generalized facility diagram
❑ Other: Area Maps
❑ Other: _____

Date of Manual Entries into this Appendix	***Comments and/or Content***

❑ If excess material from this Appendix is kept in a file instead of behind this tab, please complete the following:

Name of file: _____
Storage location: _____
Dates covered: _____
Contents: _____

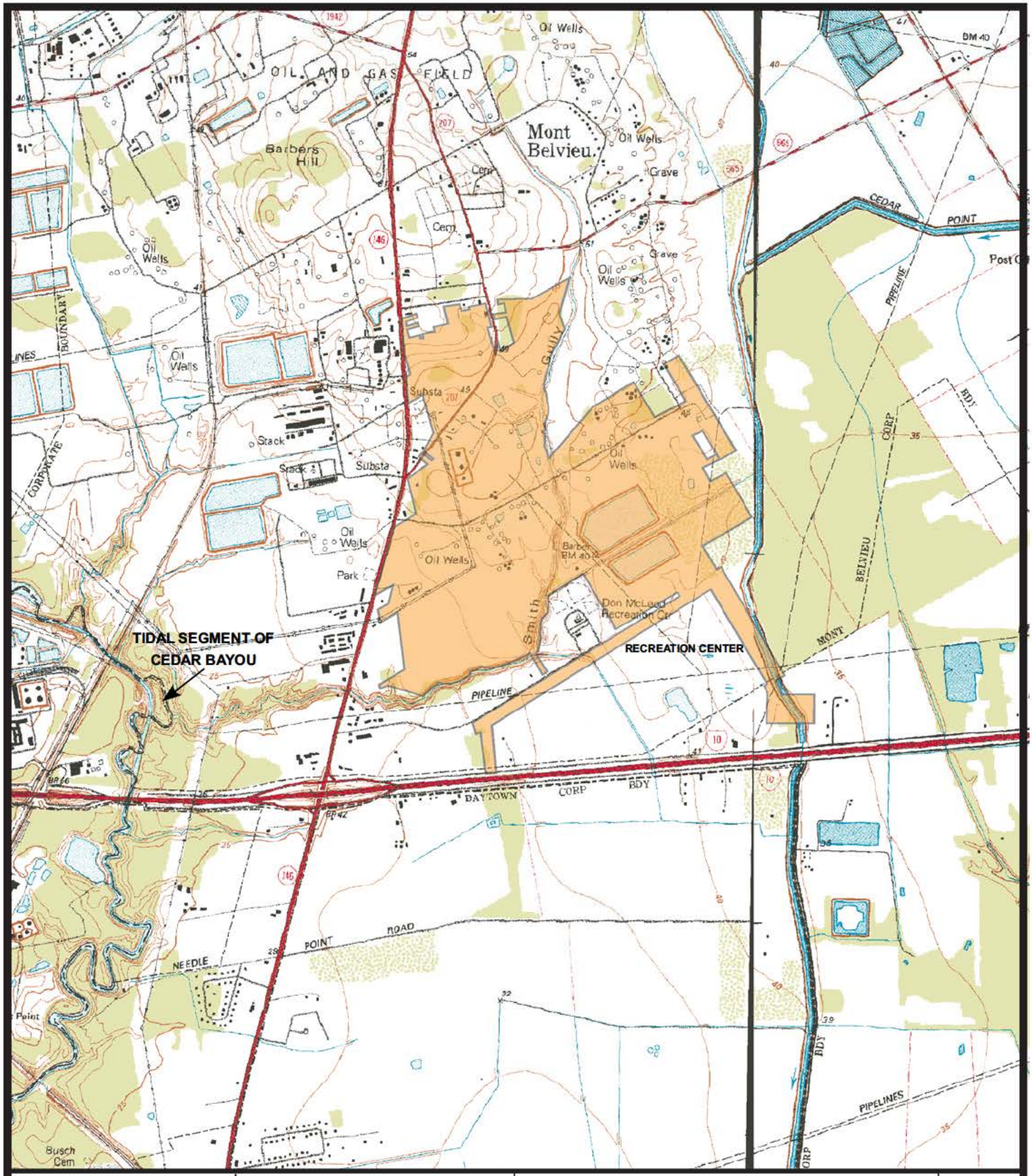

ENVIRONMENTAL PROFESSIONALS
WCM
The WCM Group, Inc.
P.O. Box 3247
Humble, TX 77347-3247
(281) 446-7070 Fax (281) 446-3348

Location on 7.5 Minute USGS Topo Quad:
Mont Belvieu & Cove Texas; Zone 15

TOPOGRAPHIC MAP

ENTERPRISE PRODUCTS OPERATING LLC
MONT BELVIEU COMPLEX
MONT BELVIEU, CHAMBERS COUNTY, TEXAS

DRAWN BY:	ALA
DATE:	06/17/2011
REV. DATE:	05/23/2012
DRAWING ID:	H:client\EPO\MTB\East Storage\2012 FRP\Topo Map.cvx

SCALE
0 1166 2330
ONE (1) INCH ~ 2,330 FEET

N

FIGURE
1

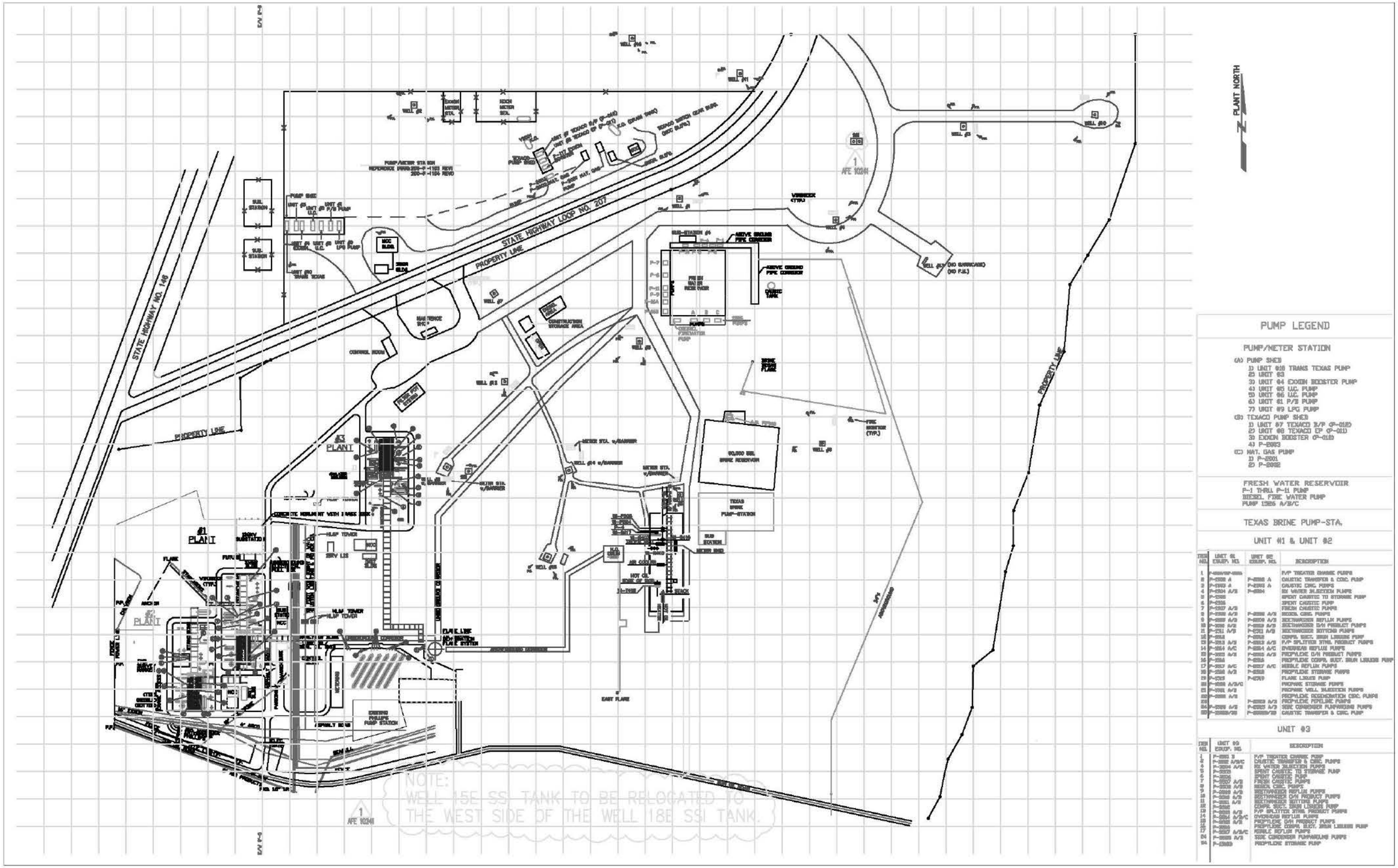

PUMP LEGEND

PUMP/METER STATION

(A) PUMP SHED
- 1) UNIT #10 TRANS TEXAS PUMP
- 2) UNIT #3
- 3) UNIT #4 EXXON BOOSTER PUMP
- 4) UNIT #5 LIC. PUMP
- 5) UNIT #6 LIC. PUMP
- 6) UNIT #1 P/B PUMP
- 7) UNIT #9 LPG PUMP

(B) TEXACO PUMP SHED
- 1) UNIT #7 TEXACO B/P (P-012D)
- 2) UNIT #8 TEXACO EP (P-011)
- 3) EXXON BOOSTER (P-010)
- 4) P-2003

(C) NAT. GAS PUMP
- 1) P-2001
- 2) P-2002

FRESH WATER RESERVOIR
P-1 THRU P-11 PUMP
DIESEL FIRE WATER PUMP
PUMP 1385 A/B/C

TEXAS BRINE PUMP-STA.

UNIT #1 & UNIT #2

ITEM NO.	UNIT #1 EQUIP. NO.	UNIT #2 EQUIP. NO.	DESCRIPTION
1	P-2001/SP-2005		P/P TREATER CHARGE PUMPS
2	P-2002 A	P-2002 A	CAUSTIC TRANSFER & CIRC. PUMP
3	P-2003 A	P-2003 A	CAUSTIC CIRC. PUMPS
4	P-2004 A/B	P-2004	BH WATER INJECTION PUMPS
5	P-2005		SPENT CAUSTIC TO STORAGE PUMP
6	P-2006		SPENT CAUSTIC PUMP
7	P-2007 A/B		FRESH CAUSTIC PUMPS
8	P-2008 A/B	P-2008 A/B	RECIRC. CIRC. PUMPS
9	P-2009 A/B	P-2009 A/B	DEETHANIZER REFLUX PUMPS
10	P-2010 A/B	P-2010 A/B	DEETHANIZER D/A PRODUCT PUMPS
11	P-2011 A/B	P-2011 A/B	DEETHANIZER BOTTOMS PRODUCT PUMPS
12	P-2012	P-2012	DEETHANIZER BOTTOMS PUMP
13	P-2013	P-2013	CONPR. SUCT. DRUM LIQUIDS PUMP
14	P-2014 A/B	P-2014 A/B	P/P SPLITTER BTMS. PRODUCT PUMPS
15	P-2015 A/C	P-2015 A/C	DEBUTANIZER REFLUX PUMPS
16	P-2016 A/B	P-2016 A/B	PROPYLENE D/A PRODUCT PUMPS
17	P-2017	P-2017	PROPYLENE CONPR. SUCT. DRUM LIQUIDS PUMP
18	P-2018 A/C	P-2018 A/C	BUTANE REFLUX PUMPS
19	P-2019 A/B	P-2019	PROPYLENE STORAGE PUMPS
20	P-2019	P-2019	PLANT LIQUID PUMP
21	P-2020 A/B/C		PROPANE STORAGE PUMPS
22	P-2021 A/B		PROPANE WELL INJECTION PUMPS
23	P-2022 A/B		PROPYLENE REGENERATION CIRC. PUMPS
24			PROPYLENE PIPELINE PUMPS
25	P-2023 A/B	P-2023 A/B	93% CONDENSER PUMPAROUND PUMPS
26	P-2024 A/B	P-2024 A/B	CAUSTIC TRANSFER & CIRC. PUMP
27	P-2025		PROPYLENE STORAGE PUMP

UNIT #3

ITEM NO.	UNIT #3 EQUIP. NO.	DESCRIPTION
1	P-2001 B	P/P TREATER CHARGE PUMP
2	P-2002 A/B/C	CAUSTIC TRANSFER & CIRC. PUMPS
3	P-2004 A/B	BH WATER INJECTION PUMPS
4	P-2005	SPENT CAUSTIC TO STORAGE PUMP
5	P-2006	SPENT CAUSTIC PUMP
6	P-2007 A/B	FRESH CAUSTIC PUMPS
7	P-2008 A/B	RECIRC. CIRC. PUMPS
8	P-2009 A/B	DEETHANIZER REFLUX PUMPS
9	P-2010 A/B	DEETHANIZER D/A PRODUCT PUMPS
10	P-2011 A/B	DEETHANIZER BOTTOMS PUMPS
11	P-2012	CONPR. SUCT. DRUM LIQUIDS PUMP
12	P-2014 A/B	P/P SPLITTER BTMS. PRODUCT PUMPS
13	P-2015 A/B/C	OVERHEAD REFLUX PUMPS
14	P-2016 A/B	PROPYLENE D/A PRODUCT PUMPS
15	P-2017	PROPYLENE CONPR. SUCT. DRUM LIQUIDS PUMP
16	P-2018 A/B/C	BUTANE REFLUX PUMPS
17	P-2019 A/B	93% CONDENSER PUMPAROUND PUMPS
18	P-2020	PROPYLENE STORAGE PUMP

NOTES
1. FOR WELL HEAD #8, 13 & 14 DETAILS, SEE DWG'S: 1248P1000-D-MB,1253P1000-D-MB,1254P1000-D-MB

FOREIGN DWG# 1200C0001-D-MB

REFERENCE DRAWINGS		No.	REVISION	BY	DATE	CHK
NUMBER	TITLE	0	AS BUILT	VGJ	7/08	PSH
4PS-803-107		1	RELOCATED SSI TANK	BEA	1/09	RD
4PS-803-111		2	ADDED EPC BORDER	SDP	5/12/09	
4PS-803-112						
4PS-803-113						
4PS-803-114						
A-0001						

Enterprise Products Operating L.P.
Houston, Texas

LOCATION: EAST STORAGE FACILITY, MONT BELVIEU, TEXAS
SCALE: NONE
DRAWN BY: VGJ
CHECKED BY:

EAST PLANT PLOT PLAN

DATE: 7/08
APPROVED:
PROJECT No.: DM0152
DRAWING NUMBER: 0463E-976-0001
REV.: 2

5/12/09 - SDP

ENTERPRISE PATH - O:\ENTERPRISE\DESIGN\DWG\976\0463E\0463E_0001.DWG

APPENDIX VIII

FISH AND WILDLIFE SENSITIVE AREAS INFORMATION

This appendix contains the following:

☒ TGLO maps pertaining to the general area surrounding the facility.
☒ Map legend.
❑ Other: _____
❑ Other: _____

Date of Manual Entries into this Appendix	***Comments and/or Content***

❑ If excess material from this Appendix is kept in a file instead of behind this tab, please complete the following:

Name of file: _____
Storage location: _____
Dates covered: _____
Contents: _____

Mont Belvieu Base Map

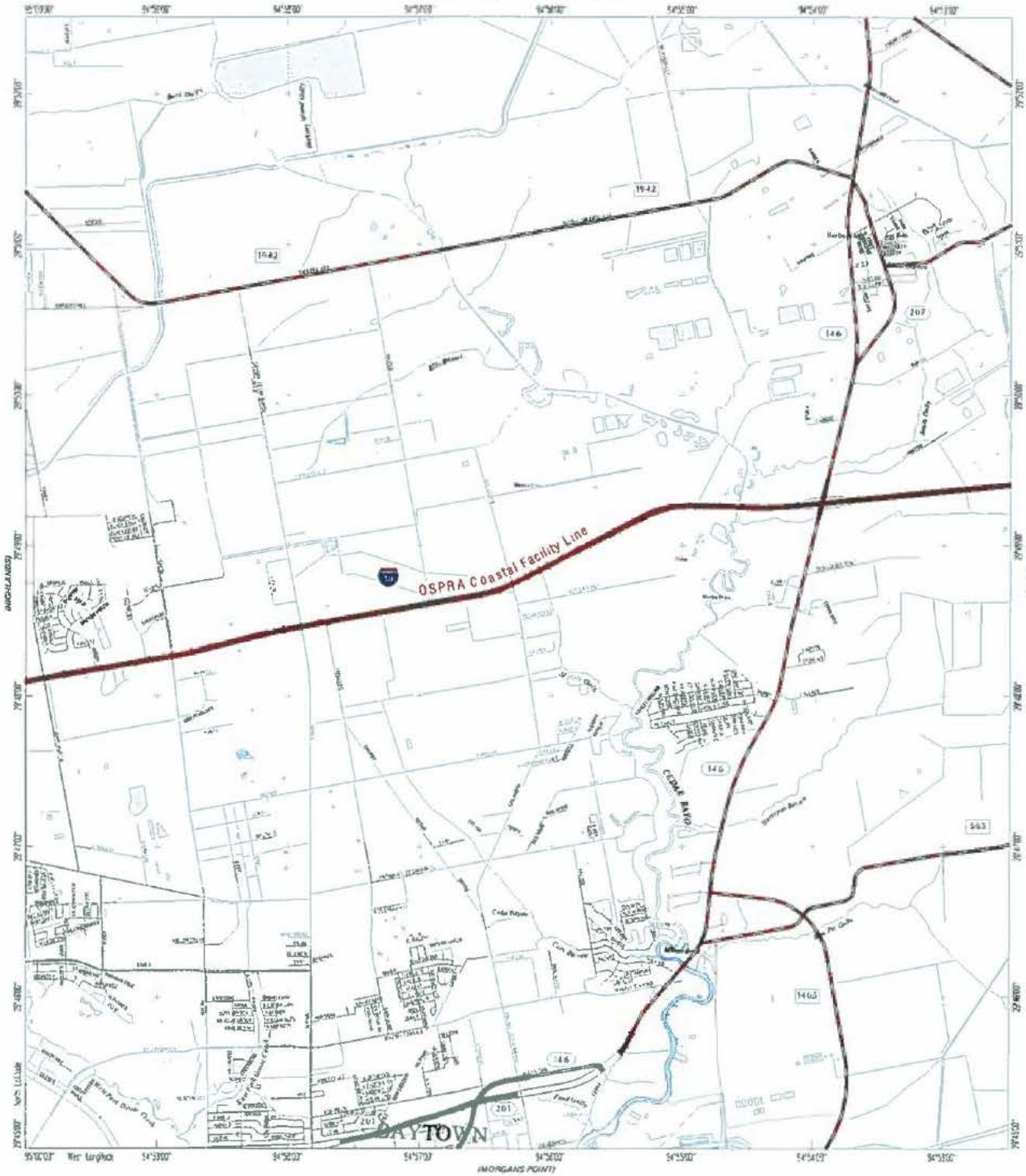

TEXAS
GENERAL LAND OFFICE
OIL SPILL
PREVENTION & RESPONSE

2994-332

Miles

Nautical Miles

Feet

Kilometers

Map Legend

- Lake, Bay, River
- Marsh, Wetland, Swamp
- Flats (Mud, Sand, Tidal)
- Divided Highway TxDOT
- State/Federal Highway TxDOT
- City Street/County Road TxDOT
- OSPRA Coastal Facility Designation Line GLO

SENSITIVE ENVIRONMENTAL AND ECONOMIC RESOURCES

This table considers resources fifteen (15) miles upstream and downstream from the facility, but focuses on those in greatest proximity.

Feature	**Risk that Would be Posed by Spill**	**Elaboration**
water intakes	HIGH	Public. No public water intakes (e.g., drinking water) were identified in the area surrounding the facility. Private. There are no private water intakes located near the facility.
schools	low	• None identified in the near vicinity, which is heavy industrial in nature. The oil products handled do not produce a significant vapor or fire hazard.
medical facilities	low	• None identified in the near vicinity
residential areas	low	• None in the near vicinity.
businesses	HIGH	• Operations of co- located and adjacent facilities and operations may be affected. These facilities are included on call-out lists.
wetlands	low	• None in the near vicinity.
fish and wildlife	low	• Not expected to be abundant in the near vicinity.
lakes and streams	low	• see wetlands (map from Texas General Land Office)
endangered fauna and flora	low	• endangered species are not expected to be abundant within this general area, although waterfowl may traverse the region.
recreational areas	low	• None in the near vicinity (see Figure 1)
Transportation routes	HIGH	• Any spill from this facility could disrupt truck traffic on the State Highway 146 and State Highway Loop 287
utilities	low	• None in the near vicinity.
other areas	low	• None in the near vicinity.

APPENDIX IX

SPILL MANAGEMENT TEAM

This appendix contains the following:

☒ Chart describing the Spill Management Team, qualifications, and related duties.

❑ Other: _____

❑ Other: _____

Date of Manual Entries into this Appendix	***Comments and/or Content***

❑ If excess material from this Appendix is kept in a file instead of behind this tab, please complete the following:

Name of file: _____
Storage location: _____
Dates covered: _____
Contents: _____

SPILL MANAGEMENT TEAM

PERSONNEL	REGULAR FUNCTION	SPILL TEAM FUNCTION	SOURCE
Facility Operators	Operators / PIC	First Response & Spill Response Operations (as needed) • stopping spill out the source of it is safe to do so. • Notifying the QI and assisting with response • make ready of facility resources • coordination with the site-wide ERT	On site
Various volunteer personnel from within the complex, which form the ERT	Operators from a variety of co-located facilities	First Response & Spill Response Operations • spill mitigation • firefighting • logistical support	On site within the host facility
Zac Futerfas	Manager East/West Storage	Command & Control (Qualified Individual) • first notification of FOSC / SOSC • engage / contract OSRO(s) • delegation of response tasks • response coordination & direction from facility command center • on-site OSRO(s) supervision authority • environmental resource damage assessment	On site
Dale Conn	Operations Superintendent	Command & Control (Alternate Qualified Individual) • Same as QI if QI is not present. • Support to QI as needed with response coordination, if QI is present.	On site
Kimberly Stratton	Senior Field Environmental Scientist	Safety & Regulatory Oversight • Interpret and apply knowledge of state and federal regulations governing spill response, under QI's direction. • Free QI / AQI from some regulatory agency liaison duties, so that they may concentrate more fully on spill response. • Report agency concerns and objectives to QI • Obtain regulatory clearance for intended spill response strategies • Fish & Wildlife Sensitive Areas planning and liaison. • Waste / recycling brokering	On site
Heath Robertson	Safety Supervisor	• Interpret and apply regulatory knowledge gathering safety requirements • Provide/ensure safety requirements, compliance work on-site safety requirements	On site
Mark Gregory	Houston Region Plant Operations Director	Field Logistics - support as needed • procurement • equipment servicing and repairs • coordination of basic logistics, such as acquisition of PPE, response personnel messing and sanitary facilities	On site

PERSONNEL	REGULAR FUNCTION	SPILL TEAM FUNCTION	SOURCE
Tim Jones	Director of Storage Terminals & Pipelines	Communications • assist with media & community relations in the event of a large spill (draft statements for QI approval, etc)	Houston corporate offices
Mark Gregory	Houston Region Plant Operations Director	Finance • Approve spending contracts • Accounting and financial record-keeping pertaining to spill response	Houston corporate offices
Responds contractor (OSRO)	Spill Response Contractors	Spill Response Operations: Direct field deployment with equipment to contain, control and recover spilled oil: • open water recovery • shoreline protection • shoreline recovery • storage/transport of recovered materials	contracted

APPENDIX X

BLANK FORMS

HARD-COPY USERS: Remove and file, FAX, photocopy, or distribute as necessary. ORIGINALS are in plastic sleeves so the "last clean copy" will not be used by accident! Users should note that these specific forms are not mandatory -- other internal formats may be used instead, depending on management preference, as long as any alternate forms capture the information required by regulation.

This appendix contains the following:

General FRP Compliance:	**PREP:**
☒ Spill response notification form	☒ QI Notification Drill Log
☐ Emergency contact record	☒ SMT Tabletop Exercise Log
☒ Personnel Response Training Log	☒ Equipment Deployment Log
☒ Record of Plan Review as a Portion of Training	☐ PREP Additional Information Log
☒ Plan Review and Update	**Other:**
☒ Response Equipment Inspection Log	❑ _____
	❑ _____

Date of Manual Entries into this Appendix	***Comments and/or Content***

❑ If excess material from this Appendix is kept in a file instead of behind this tab, please complete the following:

Name of file: _____
Storage location: _____
Dates covered: _____
Contents: _____

SPILL RESPONSE NOTIFICATION FORM – page 1 of 2

FAX or Verbally Report this Form as needed. ***CIRCLE*** *and* ***FILL IN*** *where appropriate*

Reporters Last Name **First Name, Middle Initial**	
Position	
Phone Numbers **Day** **Evening**	 281-385-0510 281-797-0795
Facility **Organization Type** **Address** **City, State, Zip**	Enterprise Products Operating LLC East Storage/Splitter III Facility 316 S. Main Street Mont Belvieu, TX 77590
Were Materials Discharged? **Confidential?** **Meeting Federal Obligations to Report?** **Date Called** **Calling for Responsible Party?** **Time Called**	Y / N Y / N Y / N _____ Y / N _____
Date of Incident **Time of Incident (am / pm)** **Incident Description** **Source and/or Cause of Incident**	_____ _____ _____ _____
Incident Address/Location, Latitude, Longitude ***CHECK ONE*** **Container Type** **Tank Oil Storage Capacity (bbls / gallons)** **Nearest City** **State, County** **Distance from City (miles)** **Direction from City** **Section, Township, Range, Borough**	☐ General Facility: 29 degrees, 50 minutes, 17.31 seconds N; 94 degrees 53 minutes, 27.58 seconds W ☐ Other: _____ ☐ Fixed above-ground storage tank ☐ Other: _____ Mont Belvieu Texas

It is not necessary to gather all information represented on this form prior to making initial reports to agencies.

Report information that is known, and follow up later.

SPILL RESPONSE NOTIFICATION FORM - page 2 of 2

FAX or Verbally Report this Form as needed. CIRCLE and FILL IN where appropriate

Material Discharged - total **Chris Code** **Discharged Quantity** **Material Discharged that reached water** **Quantity**	gallons / bbls. _____ _____ _____ _____
Actions taken to control, correct, or mitigate incident **Impact**	_____ _____ _____
Number of Injuries **Number of Deaths**	_____
Were there evacuations? **Number evacuated**	Y / N
Was there any damage? **Damage estimated in dollars**	Y / N
Medium Affected **Description** **More info about Medium**	_____ _____
Any other relevant information	_____ _____ _____ _____
Emergency Response Notification Checklist: • USCG, MSO Houston -- Galveston • EPA Region six • Texas GLO (La Porte)	_____ _____ _____

INTERNAL RECORD OF EMERGENCY CONTACTS MADE

Notifier's Name _____

Date _____

Facility Name East Storage/Splitter III Facility

Owner Name Enterprise Products Operating LLC

Facility ID # FRP-06-TX-00625

PROVIDE INFO ON NOTIFICATION FORM (FOLLOWING PAGE) TO NRC AND AS REQUESTED BY OTHER AGENCIES - other useful contacts listed in Section (b)

Organization	**Required? ***	**Number**	**Contacted (date/time)**
Security	Yes	281-385-0215 or 0217	
NRC	Yes	1-800-424-8802	
FOSC -Coast Guard	No**	**713-671-5100**	
FOSC - EPA	No**	214-655-2222	
SOSC -General Land Office	Yes	1-800-832-8224	
Texas Parks and Wildlife	Maybe	512-389-8014	
Local Fire Dept	Maybe	911	
Southeast Regional LEPC (SERLEPC)	Maybe	713-473-7646 http://www.serlepc.org/LEPC%20Home.htm	
Local Radio Station	No	281-214-0440 (KTRH 740 AM)	
Local TV Station	No	713-669-1313 (KTRK-TV 13)	
Medical Services	No	Triumph Hospital, Baytown (281) 420-7800	

Provision of contact information for private organizations is not intended as an endorsement.
** State and Federal spill reporting hotlines must be contacted at the spill enters the water, or threaten center the water.** These agencies will be contacted by the NRC, but direct courtesy calls are recommended anyway.*

Qualified Individual Notification Drill Log
(PREP Format)

1. Date: _____

2. Exercise or Actual Response? _____

3. Terminal: _____

4. Qualified Individual Notified: _____

5. Time Initiated: _____

Time at which QI Responded: _____

6. Method used to contact:

_____ **Telephone**
_____ **Pager**
_____ **Radio**
_____ **Other**

7. Description of Notification Procedure:

_____

_____

8. Identify which of the 15 core components of your response plan were exercised:

_____

_____

_____

_____

_____

_____

Certification Signature: _____

Retain this form for a minimum of three (3) years (USCG) or five (5) years (EPA).

Spill Management Team (SMT) Tabletop Drill Log
PREP Format, Page 1 of 2

1. Date(s): _____

2. Exercise or actual response? _____
If an exercise, announced or unannounced? _____

3. Location of Tabletop:_____

4. Time Started: _____
Time Completed: _____

5. Response Plan Scenario used (check one):
_____ Average Most Probable discharge
_____ Maximum Most Probable discharge
_____ Worst Case Discharge
Size of simulated spill (bbls.) _____

6. Describe how the following objectives were exercised:
(a) Spill management team's knowledge of oil spill response plan:

_____

_____

_____

_____

(b) Proper Notifications

_____

_____

_____

_____

(c) Communications System

_____

SMT Tabletop Exercise (Page 2 of 2)

(d) SMT's ability to access contracted oil spill response organizations

_____

_____

_____

(e) SMT's ability to coordinate response with On-Scene Coordinator, State, and Applicable Agencies

_____

_____

_____

(f) SMT's ability to access sensitive site and resource information in the Area Contingency Plan

_____

_____

7. Identify which of the 15 core components of your response plan were exercised:

_____

_____

_____

8. Attach a description of lesson(s) learned and person(s) to be responsible for follow up or corrective measures.

Certification Signature: _____

Retain this form for a minimum of three (3) years (USCG) or five (5) years (EPA).

Equipment Deployment Log
PREP Format, page 1 of 2

1. Date(s) Performed: _____

2. Exercise or actual response? _____
If an exercise, announced or unannounced? _____

3. Deployment location(s): _____

_____

_____

4. Time Started: _____
Time Completed: _____

5. Equipment deployed was:
_____ **Facility-owned**
_____ **OSRO Owned (OSRO Name _____)**
_____ **Both**

6. List type and amount of all equipment (e.g., boom and skimmers) deployed and number of support personnel utilized:

_____

_____

7. Describe goals of the equipment deployment and list Area Contingency Plan strategies tested (Attach a sketch of equipment deployments and booming strategies)

_____

_____

_____

8. For deployment of facility-owned equipment, was the amount of equipment deployed at least the amount necessary to respond to your facility's average most probable discharge?

_____

9. For deployment of OSRO-owned equipment, was a representative sample (at least 1000 feet of each boom type and at least one of each skimmer type) deployed?

_____

**** Page 2 ****

10. Are all facility personnel that are responsible for response operations involved in a comprehensive training program, and all pollution response equipment involved in a comprehensive maintenance program?

_____

11. Was the equipment deployed by the personnel responsible for its deployment in the event of an actual spill?

_____

_____

_____

12. Was all deployed equipment operational? If not, why not?

_____

_____

13. Identify which of the 15 core components of your response plan were exercised during this particular exercise:

_____

_____

_____

14. Attach a description of lesson(s) learned and person(s) responsible for follow up of corrective measures.

_____

_____

_____

Certification Signature
Retain this form and other documentation for a minimum of five (5) years (EPA).

PREP LOG – ADDITIONAL DESCRIPTION PAGE
(attach this page if needed)

Date of Drill: _____

Type of Drill: _____

Additional information on this drill:

_____

_____

_____

_____

_____

_____

_____

_____

_____

_____

Response Equipment Inspection Log

Facility: _____

This inspection to be conducted _____

Inspector	Date	Comments

Personnel Response Training Log

Facility: _____

Name	Signature	Response Training Date and Number of Hours	Prevention Training Date and Number of Hours

Secondary Containment Checklist
(EPA Form)

Facility: _____

Date of Inspection	Inspector's Name	Condition of Retaining Wall (standing water, debris, stressed vegetation, spilled material, valve conditions)

Discharge Prevention Meeting Log
(EPA Form)

Date _____

Facility: _____

Attendee's _____

_____

Subject/Issue Identified	Required Action	Implementation Date

RECORD OF PLAN REVIEW AS A PORTION OF TRAINING

By completing the following section, an employee certifies that they have reviewed this Plan during the course of regular facility training/refresher training, and that they are familiar with its contents. This includes, but is not limited to, familiarity with:

- facility emergency response procedures
- the employee's general responsibilities in the event of a spill
- the structure of the facility *Spill Response Team*
- the contractors that the facility may engage in the event of a spill
- Historical Incidents and Sensitive Environments Appendices

This sheet to be maintained by the QI.

PRINT NAME	SIGNATURE	TITLE	DATE OF REVIEW

RECORD OF OPA 90 PLAN REVIEW

Date of Review		
Reviewer		
Reason For Review (Check one)	_____ Post-Spill Review _____ Routine Annual Review	
Areas Identified as Needing Update or Revision:		
Actions Assigned:	**Item:**	**Person Responsible for Completion:**
Summary of Actions Taken:		

APPENDIX XI

COMPLETED FORMS

This appendix contains the following:

☒ Copies of completed forms pertaining to this facility, unless location is specified as otherwise in section below.

❑ Other: _____

❑ Other: _____

Date of Manual Entries into this Appendix	***Comments and/or Content***

❑ If excess material from this Appendix is kept in a file instead of behind this tab, please complete the following:

Name of file: _____
Storage location: _____
Dates covered: _____
Contents: _____

APPENDIX XII

AGENCY CORRESPONDENCE

This appendix contains the following:

- ❑ Copies of correspondence between the facility and regulators.
- ❑ Other: _____
- ❑ Other: _____

Date of Manual Entries into this Appendix	***Comments and/or Content***

- ❑ If excess material from this Appendix is kept in a file instead of behind this tab, please complete the following:

Name of file: _____
Storage location: _____
Dates covered: _____
Contents: _____

APPENDIX XIII

TRAINING RECORDS

This appendix contains the following:

☒ The description of training required by these regulations.
☒ Sign-in sheets or other records documenting training that was given.
❑ Other: _____
❑ Other: _____

Date of Manual Entries into this Appendix	***Comments and/or Content***

❑ If excess material from this Appendix is kept in a file instead of behind this tab, please complete the following:

Name of file: _____
Storage location: _____
Dates covered: _____
Contents: _____

OPA '90 Training: **Terminal Operators (First Responders) training will cover -**

- ❑ The Captain of the Port (COTP) Zones or Environmental Protection Agency (EPA) Regions in which the vessel will operate or facility is located.
- ❑ Notification procedures and requirements for facility owners or operators; internal response organizations; federal and state agencies; and contracted oil spill response organizations (OSROs) and the information required for those organizations.
- ❑ Communication system used for the notifications.
- ❑ Information on the products stored, used, or transferred, including familiarity with material safety data sheets, special handling procedures, health and safety hazards, spill and fire fighting procedures.
- ❑ Facility personnel responsibilities and procedures for use of facility equipment which may be available to mitigate or prevent an oil discharge.
- ❑ Specific procedures to shut down affected operations.
- ❑ Procedures to follow in the event of discharge, potential discharge, or emergency involving the following equipment or scenarios:
    - Tank overfill;
    - Tank rupture;
    - Piping or pipeline rupture;
    - Piping or pipeline leak, both under pressure and not under pressure, if applicable;
    - Explosion of fire;
    - Equipment failure; and
    - Failure of secondary containment system.
- ❑ The operational capabilities of the contracted OSROs to respond to the --
    - Average most probable discharge (small discharge);
    - Maximum most probable discharge (medium discharge);
    - Worst case discharge.
- ❑ Name of the qualified individual and how to contact him or her.
- ❑ General responsibilities and authorities of the qualified individual as described in the facility response plan and facility response organization.
- ❑ The organizational structure that will be used to manage the response actions, including --
    - Command and control;
    - Public information;
    - Safety;
    - Liaison with government agencies;
    - Spill response operations;
    - Planning;
    - Logistics support; and
    - Finance.
- ❑ The drill and exercise program to meet the federal requirements.
- ❑ The Area Contingency Plan for the area in which the facility is located.
- ❑ The National Contingency Plan.
- ❑ Roles and responsibilities of federal and state agencies in pollution response.
- ❑ OSHA requirements for worker health and safety (29 CFR 1910.120).

OPA '90 Training: **QI/AQI training with annual refreshers will cover the following elements:**

- ❑ Procedures the facility personnel may use to mitigate or prevent any discharge or a substantial threat of a discharge of oil resulting from shipboard or facility operational activities associated with internal or external cargo transfers, storage, or use.
- ❑ Facility personnel responsibilities and procedures for use of facility equipment which may be carried to mitigate an oil discharge.
- ❑ Operational capabilities of the contracted OSROs to respond to the following:
    - Average most probable discharge (small discharge);
    - Maximum most probable discharge (medium discharge); and
    - Worst case discharge.
- ❑ Responsibilities and authorities of the qualified individual as described in the facility response plan and facility response organization.
- ❑ The organizational structure that will be used to manage the response actions, including --
    - Command and control;
    - Public information;
    - Safety;
    - Liaison with government agencies;
    - Spill response operations;
    - Planning;
    - Logistics support; and
    - Finance.
- ❑ The responsibilities and duties of each oil spill management team member within the organizational structure.
- ❑ The drill and exercise program to meet federal and state regulations as required under OPA.
- ❑ The role of the qualified individual in the post discharge review of the plan to evaluate and validate its effectiveness.
- ❑ Area Contingency Plans (ACPs) for the areas in which the vessel operates or the facility is located.
- ❑ The National Contingency Plan (NCP).
- ❑ Roles and responsibilities of federal and state agencies in pollution response.
- ❑ Available response resources identified in response plan.
- ❑ Contracting and ordering procedures to acquire oil spill removal organization resources identified in the response plan.
- ❑ Occupational Safety and Health Administration (OSHA) requirements for worker health and safety (29 CFR 1910.120).
- ❑ Incident Command System/Unified Command System.
- ❑ Public affairs.
- ❑ Crisis management.
- ❑ Procedures for obtaining approval for dispersant use or in-situ burning of the spill.
- ❑ Oil spill trajectory analyses.
- ❑ Sensitive biological areas

OPA '90 Training: **Spill Management Team members**: **training will cover** -

- ❑ Captain of the Port (COTP) Zones or Environmental Protection Agency (EPA) Regions in which the vessel will operate or facility is located.
- ❑ Notification procedures and requirements for vessel or facility owners or operators; internal response organizations; federal and state agencies; and contracted oil spill removal organizations (OSROs) and the information required for those organizations.
- ❑ Communication system used for the notifications.
- ❑ Information on the cargoes transferred, stored, or used by the facility, including familiarity with material safety data sheets, special handling procedures, health and safety hazards, spill and fire fighting procedures.
- ❑ Facility personnel responsibilities and procedures for use of shipboard or facility equipment which may be carried to mitigate an oil discharge.
- ❑ Operational capabilities of the contracted OSROs to respond to the following:
    - Average most probable discharge (small discharge);
    - Maximum most probable discharge (medium discharge); and
    - Worst case discharge.
- ❑ Responsibilities and authorities of the qualified individual as described in the vessels or facility response plan and facility response organization.
- ❑ Procedures, if applicable, for transferring responsibility for direction of response activities from vessel personnel to the shore-based spill management team.
- ❑ The organizational structure that will be used to manage the response actions, including --
    - Command and control;
    - Public information;
    - Safety;
    - Liaison with government agencies;
    - Spill response operations;
    - Planning;
    - Logistics support; and
    - Finance.
- ❑ The responsibilities and duties of each oil spill management team member within the organizational structure, in accordance with designated job responsibilities.
- ❑ The training procedures as described in the response plan for members of the spill management team.
- ❑ The drill and exercise program to meet the federal and state regulations as required by OPA.
- ❑ Procedures for the post discharge review of the plan to evaluate and validate its effectiveness.
- ❑ The Area Contingency Plans (ACPs) for the areas in which the vessel operates or the facility is located.
- ❑ The National Contingency Plan (NCP).
- ❑ Roles and responsibilities of federal and state agencies in pollution response.
- ❑ Available response resources.
- ❑ Contracting and ordering procedures to acquire OSRO resources in accordance with designated job responsibilities.
- ❑ Basic information on spill operations and oil spill clean-up technology including --
    - Oil containment;
    - Oil recovery methods and devices;
    - Equipment limitations and uses;

- Shoreline clean-up and protection;
- Spill trajectory analysis;
- Use of dispersants in-situ burning, bioremediation; and
- Waste storage and disposal considerations.

- ❑ Hazard recognition and evaluation.
- ❑ Site safety and security procedures.
- ❑ OSHA requirements for worker health and safety (29 CFR 1910.120).
- ❑ Incident Command System and Unified Command System.
- ❑ Ship salvage procedures, vessel damage stability and hull stress considerations when performing shipboard mitigation procedures, as applicable to designated job responsibilities.
- ❑ Emergency cargo transfer procedures, as applicable to designated job responsibilities.
- ❑ Procedures for both the internal and ship-to-ship transfers of cargo in an emergency, as applicable to designated job responsibilities.
- ❑ Procedures and arrangements of reemergence towing, including the rigging and operation of any emergency towing equipment aboard the vessel, as applicable to designated job responsibilities.
- ❑ Sensitive biological area, as applicable to designated job responsibilities.
- ❑ Procedures for directing the deployment and use of spill response equipment, as applicable to designated job responsibilities.

APPENDIX XIV

APPLICABLE REGULATIONS

This appendix contains the following:

☒ 40 CFR 112.20 and 112.21
☒ Applicable sections of 33 CFR 154.
❑ Other: _____
❑ Other: _____

Date of Manual Entries into this Appendix	***Comments and/or Content***

❑ If excess material from this Appendix is kept in a file instead of behind this tab, please complete the following:

Name of file: _____
Storage location: _____
Dates covered: _____
Contents: _____

Electronic Code of Federal Regulations
e-CFR™

e-CFR Data is current as of February 7, 2012

Title 40: Protection of Environment

PART 112—OIL POLLUTION PREVENTION
Subpart D—Response Requirements

Browse Next

§ 112.20 Facility response plans.

(a) The owner or operator of any non-transportation-related onshore facility that, because of its location, could reasonably be expected to cause substantial harm to the environment by discharging oil into or on the navigable waters or adjoining shorelines shall prepare and submit a facility response plan to the Regional Administrator, according to the following provisions:

(1) For the owner or operator of a facility in operation on or before February 18, 1993 who is required to prepare and submit a response plan under 33 U.S.C. 1321(j)(5), the Oil Pollution Act of 1990 (Pub. L. 101–380, 33 U.S.C. 2701 *et seq.*) requires the submission of a response plan that satisfies the requirements of 33 U.S.C. 1321(j)(5) no later than February 18, 1993.

(i) The owner or operator of an existing facility that was in operation on or before February 18, 1993 who submitted a response plan by February 18, 1993 shall revise the response plan to satisfy the requirements of this section and resubmit the response plan or updated portions of the response plan to the Regional Administrator by February 18, 1995.

(ii) The owner or operator of an existing facility in operation on or before February 18, 1993 who failed to submit a response plan by February 18, 1993 shall prepare and submit a response plan that satisfies the requirements of this section to the Regional Administrator before August 30, 1994.

(2) The owner or operator of a facility in operation on or after August 30, 1994 that satisfies the criteria in paragraph (f)(1) of this section or that is notified by the Regional Administrator pursuant to paragraph (b) of this section shall prepare and submit a facility response plan that satisfies the requirements of this section to the Regional Administrator.

(i) For a facility that commenced operations after February 18, 1993 but prior to August 30, 1994, and is required to prepare and submit a response plan based on the criteria in paragraph (f)(1) of this section, the owner or operator shall submit the response plan or updated portions of the response plan, along with a completed version of the response plan cover sheet contained in appendix F to this part, to the Regional Administrator prior to August 30, 1994.

(ii) For a newly constructed facility that commences operation after August 30, 1994, and is required to prepare and submit a response plan based on the criteria in paragraph (f)(1) of this section, the owner or operator shall submit the response plan, along with a completed version of the response plan cover sheet contained in appendix F to this part, to the Regional Administrator prior to the start of operations (adjustments to the response plan to reflect changes that occur at the facility during the start-up phase of operations must be submitted to the Regional Administrator after an operational trial period of 60 days).

(iii) For a facility required to prepare and submit a response plan after August 30, 1994, as a result of a planned change in design, construction, operation, or maintenance that renders the facility subject to the criteria in paragraph (f)(1) of this section, the owner or operator shall submit the response plan, along with a completed version of the response plan cover sheet contained in appendix F to this part, to the Regional Administrator before the portion of the facility undergoing change commences operations (adjustments to the response plan to reflect changes that occur at the facility during the start-up phase of operations must be submitted to the Regional Administrator after an operational trial period of 60 days).

(iv) For a facility required to prepare and submit a response plan after August 30, 1994, as a result of an unplanned event or change in facility characteristics that renders the facility subject to the criteria in paragraph (f)(1) of this section, the owner or operator shall submit the response plan, along with a completed version of the response plan cover sheet contained in appendix F to this part, to the Regional Administrator within six months of the unplanned event or change.

(3) In the event the owner or operator of a facility that is required to prepare and submit a response plan uses an alternative formula that is comparable to one contained in appendix C to this part to evaluate the criterion in paragraph (f)(1)(ii)(B) or (f)(1)(ii)(C) of this section, the owner or operator shall attach documentation to the response plan cover sheet contained in appendix F to this part that demonstrates the reliability and analytical soundness of the alternative formula.

(4) *Preparation and submission of response plans — Animal fat and vegetable oil facilities.* The owner or operator of any non-transportation-related facility that handles, stores, or transports animal fats and vegetable oils must prepare and submit a facility response plan as follows:

(i) *Facilities with approved plans.* The owner or operator of a facility with a facility response plan that has been approved under paragraph (c) of this section by July 31, 2000 need not prepare or submit a revised plan except as otherwise required by paragraphs (b), (c), or (d) of this section.

(ii) *Facilities with plans that have been submitted to the Regional Administrator.* Except for facilities with approved plans as provided in paragraph (a)(4)(i) of this section, the owner or operator of a facility that has submitted a response plan to the Regional Administrator prior to July 31, 2000 must review the plan to determine if it meets or exceeds the applicable provisions of this part. An owner or operator need not prepare or submit a new plan if the existing plan meets or exceeds the applicable provisions of this part. If the plan does not meet or exceed the applicable provisions of this part, the owner or operator must prepare and submit a new plan by September 28, 2000.

(iii) *Newly regulated facilities.* The owner or operator of a newly constructed facility that commences operation after July 31, 2000 must prepare and submit a plan to the Regional Administrator in accordance with paragraph (a)(2)(ii) of this section. The plan must meet or exceed the applicable provisions of this part. The owner or operator of an existing facility that must prepare and submit a plan after July 31, 2000 as a result of a planned or unplanned change in facility characteristics that causes the facility to become regulated under paragraph (f)(1) of this section, must prepare and submit a plan to the Regional Administrator in accordance with paragraph (a)(2)(iii) or (iv) of this section, as appropriate. The plan must meet or exceed the applicable provisions of this part.

(iv) *Facilities amending existing plans.* The owner or operator of a facility submitting an amended plan in accordance with paragraph (d) of this section after July 31, 2000, including plans that had been previously approved, must also review the plan to determine if it meets or exceeds the applicable provisions of this part. If the plan does not meet or exceed the applicable provisions of this part, the owner or operator must revise and resubmit revised portions of an amended plan to the Regional Administrator in accordance with paragraph (d) of this section, as appropriate. The plan must meet or exceed the applicable provisions of this part.

(b)(1) The Regional Administrator may at any time require the owner or operator of any non-transportation-related onshore facility to prepare and submit a facility response plan under this section after considering the factors in paragraph (f)(2) of this section. If such a determination is made, the Regional Administrator shall notify the facility owner or operator in writing and shall provide a basis for the determination. If the Regional Administrator notifies the owner or operator in writing of the requirement to prepare and submit a response plan under this section, the owner or operator of the facility shall submit the response plan to the Regional Administrator within six months of receipt of such written notification.

(2) The Regional Administrator shall review plans submitted by such facilities to determine whether the facility could, because of its location, reasonably be expected to cause significant and substantial harm to the environment by discharging oil into or on the navigable waters or adjoining shorelines.

(c) The Regional Administrator shall determine whether a facility could, because of its location, reasonably be expected to cause significant and substantial harm to the environment by discharging oil into or on the navigable waters or adjoining shorelines, based on the factors in paragraph (f)(3) of this section. If such a determination is made, the Regional Administrator shall notify the owner or operator of the facility in writing and:

(1) Promptly review the facility response plan;

(2) Require amendments to any response plan that does not meet the requirements of this section;

(3) Approve any response plan that meets the requirements of this section; and

(4) Review each response plan periodically thereafter on a schedule established by the Regional Administrator provided that the period between plan reviews does not exceed five years.

(d)(1) The owner or operator of a facility for which a response plan is required under this part shall revise and resubmit revised portions of the response plan within 60 days of each facility change that materially may affect the response to a worst case discharge, including:

(i) A change in the facility's configuration that materially alters the information included in the response plan;

(ii) A change in the type of oil handled, stored, or transferred that materially alters the required response resources;

(iii) A material change in capabilities of the oil spill removal organization(s) that provide equipment and personnel to respond to discharges of oil described in paragraph (h)(5) of this section;

(iv) A material change in the facility's spill prevention and response equipment or emergency response procedures; and

(v) Any other changes that materially affect the implementation of the response plan.

(2) Except as provided in paragraph (d)(1) of this section, amendments to personnel and telephone number lists included in the response plan and a change in the oil spill removal organization(s) that does not result in a material change in support capabilities do not require approval by the Regional Administrator. Facility owners or operators shall provide a copy of such changes to the Regional Administrator as the revisions occur.

(3) The owner or operator of a facility that submits changes to a response plan as provided in paragraph (d)(1) or (d)(2) of this section shall provide the EPA-issued facility identification number (where one has been assigned) with the changes.

(4) The Regional Administrator shall review for approval changes to a response plan submitted pursuant to paragraph (d)(1) of this section for a facility determined pursuant to paragraph (f)(3) of this section to have the potential to cause significant and substantial harm to the environment.

(e) If the owner or operator of a facility determines pursuant to paragraph (a)(2) of this section that the facility could not, because of its location, reasonably be expected to cause substantial harm to the environment by discharging oil into or on the navigable waters or adjoining shorelines, the owner or operator shall complete and maintain at the facility the certification form contained in appendix C to this part and, in the event an alternative formula that is comparable to one contained in appendix C to this part is used to evaluate the criterion in paragraph (f)(1)(ii)(B) or (f)(1)(ii)(C) of this section, the owner or operator shall attach documentation to the certification form that demonstrates the reliability and analytical soundness of the comparable formula and shall notify the Regional Administrator in writing that an alternative formula was used.

(f)(1) A facility could, because of its location, reasonably be expected to cause substantial harm to the environment by discharging oil into or on the navigable waters or adjoining shorelines pursuant to paragraph (a)(2) of this section, if it meets any of the following criteria applied in accordance with the flowchart contained in attachment C-I to appendix C to this part:

(i) The facility transfers oil over water to or from vessels and has a total oil storage capacity greater than or equal to 42,000 gallons; or

(ii) The facility's total oil storage capacity is greater than or equal to 1 million gallons, and one of the following is true:

(A) The facility does not have secondary containment for each aboveground storage area sufficiently large to contain the capacity of the largest aboveground oil storage tank within each storage area plus sufficient freeboard to allow for precipitation;

(B) The facility is located at a distance (as calculated using the appropriate formula in appendix C to this part or a comparable formula) such that a discharge from the facility could cause injury to fish and wildlife and sensitive environments. For further description of fish and wildlife and sensitive environments, see Appendices I, II, and III of the “Guidance for Facility and Vessel Response Plans: Fish and Wildlife and Sensitive Environments” (see appendix E to this part, section 13, for availability) and the applicable Area Contingency Plan prepared pursuant to section 311(j)(4) of the Clean Water Act;

(C) The facility is located at a distance (as calculated using the appropriate formula in appendix C to this part or a comparable formula) such that a discharge from the facility would shut down a public drinking water intake; or

(D) The facility has had a reportable oil discharge in an amount greater than or equal to 10,000 gallons within the last 5 years.

(2)(i) To determine whether a facility could, because of its location, reasonably be expected to cause substantial harm to the environment by discharging oil into or on the navigable waters or adjoining shorelines pursuant to paragraph (b) of this section, the Regional Administrator shall consider the following:

(A) Type of transfer operation;

(B) Oil storage capacity;

(C) Lack of secondary containment;

(D) Proximity to fish and wildlife and sensitive environments and other areas determined by the Regional Administrator to possess ecological value;

(E) Proximity to drinking water intakes;

(F) Spill history; and

(G) Other site-specific characteristics and environmental factors that the Regional Administrator determines to be relevant to protecting the environment from harm by discharges of oil into or on navigable waters or adjoining shorelines.

(ii) Any person, including a member of the public or any representative from a Federal, State, or local agency who believes that a facility subject to this section could, because of its location, reasonably be expected to cause substantial harm to the environment by discharging oil into or on the navigable waters or adjoining shorelines may petition the Regional Administrator to determine whether the facility meets the criteria in paragraph (f)(2)(i) of this section. Such petition shall include a discussion of how the factors in paragraph (f)(2)(i) of this section apply to the facility in question. The RA shall consider such petitions and respond in an appropriate amount of time.

(3) To determine whether a facility could, because of its location, reasonably be expected to cause significant and substantial harm to the environment by discharging oil into or on the navigable waters or adjoining shorelines, the Regional Administrator may consider the factors in paragraph (f)(2) of this section as well as the following:

(i) Frequency of past discharges;

(ii) Proximity to navigable waters;

(iii) Age of oil storage tanks; and

(iv) Other facility-specific and Region-specific information, including local impacts on public health.

(g)(1) All facility response plans shall be consistent with the requirements of the National Oil and Hazardous Substance Pollution Contingency Plan (40 CFR part 300) and applicable Area Contingency Plans prepared pursuant to section 311(j)(4) of the Clean Water Act. The facility response plan should be coordinated with the local emergency response plan developed by the local emergency planning committee under section 303 of Title III of the Superfund Amendments and Reauthorization Act of 1986 (42 U.S.C. 11001 et seq.). Upon request, the owner or operator should provide a copy of the facility response plan to the local emergency planning committee or State emergency response commission.

(2) The owner or operator shall review relevant portions of the National Oil and Hazardous Substances Pollution Contingency Plan and applicable Area Contingency Plan annually and, if necessary, revise the facility response plan to ensure consistency with these plans.

(3) The owner or operator shall review and update the facility response plan periodically to reflect changes at the facility.

(h) A response plan shall follow the format of the model facility-specific response plan included in

appendix F to this part, unless you have prepared an equivalent response plan acceptable to the Regional Administrator to meet State or other Federal requirements. A response plan that does not follow the specified format in appendix F to this part shall have an emergency response action plan as specified in paragraphs (h)(1) of this section and be supplemented with a cross-reference section to identify the location of the elements listed in paragraphs (h)(2) through (h)(10) of this section. To meet the requirements of this part, a response plan shall address the following elements, as further described in appendix F to this part:

(1) *Emergency response action plan.* The response plan shall include an emergency response action plan in the format specified in paragraphs (h)(1)(i) through (viii) of this section that is maintained in the front of the response plan, or as a separate document accompanying the response plan, and that includes the following information:

(i) The identity and telephone number of a qualified individual having full authority, including contracting authority, to implement removal actions;

(ii) The identity of individuals or organizations to be contacted in the event of a discharge so that immediate communications between the qualified individual identified in paragraph (h)(1) of this section and the appropriate Federal officials and the persons providing response personnel and equipment can be ensured;

(iii) A description of information to pass to response personnel in the event of a reportable discharge;

(iv) A description of the facility's response equipment and its location;

(v) A description of response personnel capabilities, including the duties of persons at the facility during a response action and their response times and qualifications;

(vi) Plans for evacuation of the facility and a reference to community evacuation plans, as appropriate;

(vii) A description of immediate measures to secure the source of the discharge, and to provide adequate containment and drainage of discharged oil; and

(viii) A diagram of the facility.

(2) *Facility information.* The response plan shall identify and discuss the location and type of the facility, the identity and tenure of the present owner and operator, and the identity of the qualified individual identified in paragraph (h)(1) of this section.

(3) *Information about emergency response.* The response plan shall include:

(i) The identity of private personnel and equipment necessary to remove to the maximum extent practicable a worst case discharge and other discharges of oil described in paragraph (h)(5) of this section, and to mitigate or prevent a substantial threat of a worst case discharge (To identify response resources to meet the facility response plan requirements of this section, owners or operators shall follow appendix E to this part or, where not appropriate, shall clearly demonstrate in the response plan why use of appendix E of this part is not appropriate at the facility and make comparable arrangements for response resources);

(ii) Evidence of contracts or other approved means for ensuring the availability of such personnel and equipment;

(iii) The identity and the telephone number of individuals or organizations to be contacted in the event of a discharge so that immediate communications between the qualified individual identified in paragraph (h)(1) of this section and the appropriate Federal official and the persons providing response personnel and equipment can be ensured;

(iv) A description of information to pass to response personnel in the event of a reportable discharge;

(v) A description of response personnel capabilities, including the duties of persons at the facility during a response action and their response times and qualifications;

(vi) A description of the facility's response equipment, the location of the equipment, and equipment testing;

(vii) Plans for evacuation of the facility and a reference to community evacuation plans, as appropriate;

(viii) A diagram of evacuation routes; and

(ix) A description of the duties of the qualified individual identified in paragraph (h)(1) of this section, that include:

(A) Activate internal alarms and hazard communication systems to notify all facility personnel;

(B) Notify all response personnel, as needed;

(C) Identify the character, exact source, amount, and extent of the release, as well as the other items needed for notification;

(D) Notify and provide necessary information to the appropriate Federal, State, and local authorities with designated response roles, including the National Response Center, State Emergency Response Commission, and Local Emergency Planning Committee;

(E) Assess the interaction of the discharged substance with water and/or other substances stored at the facility and notify response personnel at the scene of that assessment;

(F) Assess the possible hazards to human health and the environment due to the release. This assessment must consider both the direct and indirect effects of the release (i.e., the effects of any toxic, irritating, or asphyxiating gases that may be generated, or the effects of any hazardous surface water runoffs from water or chemical agents used to control fire and heat-induced explosion);

(G) Assess and implement prompt removal actions to contain and remove the substance released;

(H) Coordinate rescue and response actions as previously arranged with all response personnel;

(I) Use authority to immediately access company funding to initiate cleanup activities; and

(J) Direct cleanup activities until properly relieved of this responsibility.

(4) *Hazard evaluation.* The response plan shall discuss the facility's known or reasonably identifiable history of discharges reportable under 40 CFR part 110 for the entire life of the facility and shall identify areas within the facility where discharges could occur and what the potential effects of the discharges would be on the affected environment. To assess the range of areas potentially affected, owners or operators shall, where appropriate, consider the distance calculated in paragraph (f)(1)(ii) of this section to determine whether a facility could, because of its location, reasonably be expected to cause substantial harm to the environment by discharging oil into or on the navigable waters or adjoining shorelines.

(5) *Response planning levels.* The response plan shall include discussion of specific planning scenarios for:

(i) A worst case discharge, as calculated using the appropriate worksheet in appendix D to this part. In cases where the Regional Administrator determines that the worst case discharge volume calculated by the facility is not appropriate, the Regional Administrator may specify the worst case discharge amount to be used for response planning at the facility. For complexes, the worst case planning quantity shall be the larger of the amounts calculated for each component of the facility;

(ii) A discharge of 2,100 gallons or less, provided that this amount is less than the worst case discharge amount. For complexes, this planning quantity shall be the larger of the amounts calculated for each component of the facility; and

(iii) A discharge greater than 2,100 gallons and less than or equal to 36,000 gallons or 10 percent of the capacity of the largest tank at the facility, whichever is less, provided that this amount is less than the worst case discharge amount. For complexes, this planning quantity shall be the larger of the amounts calculated for each component of the facility.

(6) *Discharge detection systems.* The response plan shall describe the procedures and equipment used to detect discharges.

(7) *Plan implementation.* The response plan shall describe:

(i) Response actions to be carried out by facility personnel or contracted personnel under the response plan to ensure the safety of the facility and to mitigate or prevent discharges described in paragraph (h)

(5) of this section or the substantial threat of such discharges;

(ii) A description of the equipment to be used for each scenario;

(iii) Plans to dispose of contaminated cleanup materials; and

(iv) Measures to provide adequate containment and drainage of discharged oil.

(8) *Self-inspection, drills/exercises, and response training.* The response plan shall include:

(i) A checklist and record of inspections for tanks, secondary containment, and response equipment;

(ii) A description of the drill/exercise program to be carried out under the response plan as described in §112.21;

(iii) A description of the training program to be carried out under the response plan as described in §112.21; and

(iv) Logs of discharge prevention meetings, training sessions, and drills/exercises. These logs may be maintained as an annex to the response plan.

(9) *Diagrams.* The response plan shall include site plan and drainage plan diagrams.

(10) *Security systems.* The response plan shall include a description of facility security systems.

(11) *Response plan cover sheet.* The response plan shall include a completed response plan cover sheet provided in section 2.0 of appendix F to this part.

(i)(1) In the event the owner or operator of a facility does not agree with the Regional Administrator's determination that the facility could, because of its location, reasonably be expected to cause substantial harm or significant and substantial harm to the environment by discharging oil into or on the navigable waters or adjoining shorelines, or that amendments to the facility response plan are necessary prior to approval, such as changes to the worst case discharge planning volume, the owner or operator may submit a request for reconsideration to the Regional Administrator and provide additional information and data in writing to support the request. The request and accompanying information must be submitted to the Regional Administrator within 60 days of receipt of notice of the Regional Administrator's original decision. The Regional Administrator shall consider the request and render a decision as rapidly as practicable.

(2) In the event the owner or operator of a facility believes a change in the facility's classification status is warranted because of an unplanned event or change in the facility's characteristics (i.e., substantial harm or significant and substantial harm), the owner or operator may submit a request for reconsideration to the Regional Administrator and provide additional information and data in writing to support the request. The Regional Administrator shall consider the request and render a decision as rapidly as practicable.

(3) After a request for reconsideration under paragraph (i)(1) or (i)(2) of this section has been denied by the Regional Administrator, an owner or operator may appeal a determination made by the Regional Administrator. The appeal shall be made to the EPA Administrator and shall be made in writing within 60 days of receipt of the decision from the Regional Administrator that the request for reconsideration was denied. A complete copy of the appeal must be sent to the Regional Administrator at the time the appeal is made. The appeal shall contain a clear and concise statement of the issues and points of fact in the case. It also may contain additional information from the owner or operator, or from any other person. The EPA Administrator may request additional information from the owner or operator, or from any other person. The EPA Administrator shall render a decision as rapidly as practicable and shall notify the owner or operator of the decision.

[59 FR 34098, July 1, 1994, as amended at 65 FR 40798, June 30, 2000; 66 FR 34560, June 29, 2001; 67 FR 47151, July 17, 2002]

Browse Next

For questions or comments regarding e-CFR editorial content, features, or design, email ecfr@nara.gov.

For questions concerning e-CFR programming and delivery issues, email webteam@gpo.gov.

Section 508 / Access bility

Electronic Code of Federal Regulations
e-CFR™

e-CFR Data is current as of February 7, 2012

Title 40: Protection of Environment

PART 112—OIL POLLUTION PREVENTION
Subpart D—Response Requirements

Browse Previous

§ 112.21 Facility response training and drills/exercises.

(a) The owner or operator of any facility required to prepare a facility response plan under §112.20 shall develop and implement a facility response training program and a drill/exercise program that satisfy the requirements of this section. The owner or operator shall describe the programs in the response plan as provided in §112.20(h)(8).

(b) The facility owner or operator shall develop a facility response training program to train those personnel involved in oil spill response activities. It is recommended that the training program be based on the USCG's Training Elements for Oil Spill Response, as applicable to facility operations. An alternative program can also be acceptable subject to approval by the Regional Administrator.

(1) The owner or operator shall be responsible for the proper instruction of facility personnel in the procedures to respond to discharges of oil and in applicable oil spill response laws, rules, and regulations.

(2) Training shall be functional in nature according to job tasks for both supervisory and non-supervisory operational personnel.

(3) Trainers shall develop specific lesson plans on subject areas relevant to facility personnel involved in oil spill response and cleanup.

(c) The facility owner or operator shall develop a program of facility response drills/exercises, including evaluation procedures. A program that follows the National Preparedness for Response Exercise Program (PREP) (see appendix E to this part, section 13, for availability) will be deemed satisfactory for purposes of this section. An alternative program can also be acceptable subject to approval by the Regional Administrator.

[59 FR 34101, July 1, 1994, as amended at 65 FR 40798, June 30, 2000]

Browse Previous

For questions or comments regarding e-CFR editorial content, features, or design, email ecfr@nara.gov.

For questions concerning e-CFR programming and delivery issues, email webteam@gpo.gov.

Section 508 / Access bility

Electronic Code of Federal Regulations e-CFR™

e-CFR Data is current as of February 7, 2012

Title 33: Navigation and Navigable Waters

Browse Previous | Browse Next

PART 154—FACILITIES TRANSFERRING OIL OR HAZARDOUS MATERIAL IN BULK

Section Contents

Subpart A—General

§ 154.100 Applicability.
§ 154.105 Definitions.
§ 154.106 Incorporation by reference: Where can I get a copy of the publications incorporated by reference in this part?
§ 154.107 Alternatives.
§ 154.108 Exemptions.
§ 154.110 Letter of intent.
§ 154.120 Facility examinations.

Subpart B—Operations Manual

§ 154.300 Operations manual: General.
§ 154.310 Operations manual: Contents.
§ 154.320 Operations manual: Amendment.
§ 154.325 Operations manual: Procedures for examination.

Subpart C—Equipment Requirements

§ 154.500 Hose assemblies.
§ 154.510 Loading arms.
§ 154.520 Closure devices.
§ 154.525 Monitoring devices.
§ 154.530 Small discharge containment.
§ 154.540 Discharge removal.
§ 154.545 Discharge containment equipment.
§ 154.550 Emergency shutdown.
§ 154.560 Communications.
§ 154.570 Lighting.

Subpart D—Facility Operations

§ 154.700 General.
§ 154.710 Persons in charge: Designation and qualification.
§ 154.730 Persons in charge: Evidence of designation.
§ 154.735 Safety requirements.
§ 154.740 Records.
§ 154.750 Compliance with operations manual.

Subpart E—Vapor Control Systems

§ 154.800 Applicability.
§ 154.802 Definitions.

§ 154.804 Review, certification, and initial inspection.
§ 154.806 Application for acceptance as a certifying entity.
§ 154.808 Vapor control system, general.
§ 154.810 Vapor line connections.
§ 154.812 Facility requirements for vessel liquid overfill protection.
§ 154.814 Facility requirements for vessel vapor overpressure and vacuum protection.
§ 154.820 Fire, explosion, and detonation protection.
§ 154.822 Detonation arresters, flame arresters, and flame screens.
§ 154.824 Inerting, enriching, and diluting systems.
§ 154.826 Vapor compressors and blowers.
§ 154.828 Vapor recovery and vapor destruction units.
§ 154.840 Personnel training.
§ 154.850 Operational requirements.

Subpart F—Response Plans for Oil Facilities

§ 154.1010 Purpose.
§ 154.1015 Applicability.
§ 154.1016 Facility classification by COTP.
§ 154.1017 Response plan submission requirements.
§ 154.1020 Definitions.
§ 154.1025 Operating restrictions and interim operating authorization.
§ 154.1026 Qualified individual and alternate qualified individual.
§ 154.1028 Methods of ensuring the availability of response resources by contract or other approved means.
§ 154.1029 Worst case discharge.
§ 154.1030 General response plan contents.
§ 154.1035 Specific requirements for facilities that could reasonably be expected to cause significant and substantial harm to the environment.
§ 154.1040 Specific requirements for facilities that could reasonably be expected to cause substantial harm to the environment.
§ 154.1041 Specific response information to be maintained on mobile MTR facilities.
§ 154.1045 Response plan development and evaluation criteria for facilities that handle, store, or transport Group I through Group IV petroleum oils.
§ 154.1047 Response plan development and evaluation criteria for facilities that handle, store, or transport Group V petroleum oils.
§ 154.1050 Training.
§ 154.1055 Exercises.
§ 154.1057 Inspection and maintenance of response resources.
§ 154.1060 Submission and approval procedures.
§ 154.1065 Plan review and revision procedures.
§ 154.1070 Deficiencies.
§ 154.1075 Appeal process.

Subpart G—Additional Response Plan Requirements for a Trans-Alaska Pipeline Authorization Act (TAPAA) Facility Operating in Prince William Sound, Alaska

§ 154.1110 Purpose and applicability.
§ 154.1115 Definitions.
§ 154.1120 Operating restrictions and interim operating authorization.
§ 154.1125 Additional response plan requirements.
§ 154.1130 Requirements for prepositioned response equipment.
§ 154.1135 Response plan development and evaluation criteria.
§ 154.1140 TAPAA facility contracting with a vessel.

Subpart H—Response Plans for Animal Fats and Vegetable Oils Facilities

§ 154.1210 Purpose and applicability.
§ 154.1216 Facility classification.
§ 154.1220 Response plan submission requirements.
§ 154.1225 Specific response plan development and evaluation criteria and other requirements for fixed facilities that handle, store, or transport animal fats or vegetable oils.
§ 154.1228 Methods of ensuring the availability of response resources by contract or other approved means.
§ 154.1240 Specific requirements for animal fats and vegetable oils facilities that could reasonably be expected to cause substantial harm to the environment.

Subpart I—Response Plans for Other Non-Petroleum Oil Facilities

§ 154.1310 Purpose and applicability.
§ 154.1320 Response plan submission requirements.
§ 154.1325 Response plan development and evaluation criteria for facilities that handle, store, or transport other non-petroleum oils.
Appendix A to Part 154—Guidelines for Detonation Flame Arresters
Appendix B to Part 154—Standard Specification for Tank Vent Flame Arresters
Appendix C to Part 154—Guidelines for Determining and Evaluating Required Response Resources for Facility Response Plans
Appendix D to Part 154—Training Elements for Oil Spill Response Plans

---

Authority: 33 U.S.C. 1231, 1321(j)(1)(C), (j)(5), (j)(6), and (m)(2); sec. 2, E.O. 12777, 56 FR 54757; Department of Homeland Security Delegation No. 0170.1. Subpart F is also issued under 33 U.S.C. 2735.

Subpart A—General

top

§ 154.100 Applicability.

top

(a) This part applies to each facility that is capable of transferring oil or hazardous materials, in bulk, to or from a vessel, where the vessel has a total capacity, from a combination of all bulk products carried, of 39.75 cubic meters (250 barrels) or more. This part does not apply to the facility when it is in a caretaker status. This part does not apply to any offshore facility operating under the jurisdiction of the Secretary of the Department of Interior.

(b) Upon written notice to the facility operator, the COTP may apply, as necessary for the safety of the facility, its personnel, or the public, all or portions of §154.735 to each facility that is capable of transferring oil or hazardous material, in bulk, only to or from a vessel with a capacity of less than 250 barrels. If the facility is in caretaker status, the COTP may not apply the provisions of §154.735 to the facility if its storage tanks and piping are gas free.

(c) Upon a determination by the COTP under §154.1016 that an MTR facility, as defined in subpart F, could reasonably be expected to cause substantial harm to the environment by discharging oil into or on the navigable waters, adjoining shorelines, or exclusive economic zone, subpart F of this part is applicable to the facility.

(d) The following sections of this part apply to mobile facilities:

(1) Section 154.105 Definitions.

(2) Section 154.107 Alternatives.

(3) Section 154.108 Exemptions.

(4) Section 154.110 Letter of Intent.

(5) Section 154.120 Facility examinations.

(6) Section 154.300 Operations Manual: General.

(7) Section 154.310 Operations Manual: Contents. Paragraphs (a)(2), (a)(3), (a)(5) through (a)(7), (a)(9), (a)(12), (a)(14), (a)(16), (a)(17)(ii) through (a)(17)(iv), (a)(18), (a)(20) through (23), (c) and (d).

(8) Section 154.320 Operations Manual: Amendment.

(9) Section 154.325 Operations Manual: Procedures for examination.

(10) Section 154.500 Hose assemblies. Paragraphs (a), (b), (c), (d)(1) through (3) and (e)(1) through (3).

(11) Section 154.520 Closure devices.

(12) Section 154.530 Small discharge containment. Paragraphs (a)(1) through (3) and (d).

(13) Section 154.545 Discharge containment equipment.

(14) Section 154.550 Emergency shutdown.

(15) Section 154.560 Communications.

(16) Section 154.570 Lighting. Paragraphs (c) and (d).

(17) Section 154.700 General.

(18) Section 154.710 Persons in charge: Designation and qualification. Paragraphs (a) through (c), (d)(1) through (3), (d)(7) and (e).

(19) Section 154.730 Persons in charge: Evidence of designation.

(20) Section 154.735 Safety requirements. Paragraphs (d), (f), (g), (j)(1) through (2), (k)(1) through (2), (m), (o) through (q), (r)(1) through (3), (s) and (v).

(21) Section 154.740 Records. Paragraphs (a) through (f) and (j).

(22) Section 154.750 Compliance with Operations Manual.

[CGD 86–034, 55 FR 36252, Sept. 4, 1990, as amended by CGD 91–036, 58 FR 7352, Feb. 5, 1993; CGD 93–056, 61 FR 41457, Aug. 8, 1996]

§ 154.105 Definitions.

top

As used in this part:

Barrel means a quantity of liquid equal to 42 U.S. gallons.

Boundary Line means any of the lines described in 46 CFR part 7.

Captain of the Port (COTP) means the U.S. Coast Guard officer commanding a Captain of the Port Zone described in part 3 of this chapter, or that person's authorized representative.

Caretaker status denotes a facility where all piping, hoses, loading arms, storage tanks, and related equipment in the marine transfer area are completely free of oil or hazardous materials, where these components have been certified as being gas free, where piping, hoses, and loading arms terminating near any body of water have been blanked, and where the facility operator has notified the COTP that the facility will be in caretaker status.

Commandant means the Commandant of the Coast Guard or an authorized representative.

Contiguous Zone means the entire zone established by the United States under Article 24 of the Convention on the Territorial Sea and the Contiguous Zone, but not extending beyond 12 miles from the baseline from which the breadth of the territorial sea is measured.

District Commander means the officer of the Coast Guard designated by the Commandant to command a Coast Guard District, as described in part 3 of this chapter or an authorized representative.

Facility means either an onshore or offshore facility, except for an offshore facility operating under the jurisdiction of the Secretary of the Department of Interior, and includes, but is not limited to, structure, equipment, and appurtenances thereto, used or capable of being used to transfer oil or hazardous materials to or from a vessel or public vessel. Also included are facilities that tank clean or strip and any floating structure that is used to support an integral part of the facility's operation. A facility includes federal, state, municipal, and private facilities.

Facility operator means the person who owns, operates, or is responsible for the operation of the facility.

Hazardous material means a liquid material or substance, other than oil or liquefied gases, listed under 46 CFR 153.40 (a), (b), (c), or (e).

Marine transfer area means that part of a waterfront facility handling oil or hazardous materials in bulk between the vessel, or where the vessel moors, and the first manifold or shutoff valve on the pipeline encountered after the pipeline enters the secondary containment required under 40 CFR 112.7 or 49 CFR 195.264 inland of the terminal manifold or loading arm, or, in the absence of secondary containment, to the valve or manifold adjacent to the bulk storage tank, including the entire pier or wharf to which a vessel transferring oil or hazardous materials is moored.

MARPOL 73/78 means the International Convention for the Prevention of Pollution from Ships, 1973 (done at London, November 2, 1973) as modified by the Protocol of 1978 relating to the International Convention for the Prevention of Pollution from Ships, 1973 (done at London, February 17, 1978).

Mobile facility means any facility that can readily change location, such as a tank truck or tank car, other than a vessel or public vessel.

Monitoring device means any fixed or portable sensing device used to monitor for a discharge of oil or hazardous material onto the water, within or around a facility, and designed to notify operating personnel of a discharge of oil or hazardous material.

Officer in Charge, Marine Inspection (OCMI) means the U.S. Coast Guard officer commanding a Marine Inspection Zone described in part 3 of this chapter, or an authorized representative.

Offshore facility means any facility of any kind located in, on, or under, any of the navigable waters of the United States, and any facility of any kind which is subject to the jurisdiction of the United States and is located in, on, or under any other waters, other than a vessel or a public vessel.

Oil means oil of any kind or in any form, including but not limited to, petroleum, fuel oil, sludge, oil refuse, and oil mixed with wastes other than dredged spoil.

Onshore facility means any facility (including, but not limited to, motor vehicles and rolling stock) of any kind located in, on, or under any land within the United States other than submerged land.

Person in charge means an individual designated as a person in charge of transfer operations under §154.710 (for facilities) or §155.700 (for vessels) of this chapter.

STCW means the International Convention on Standards of Training, Certification, and Watchkeeping for Seafarers, 1978.

Self-propelled tank vessel means a self-propelled tank vessel other than a tankship.

Tank barge means a non-self-propelled tank vessel.

Tankship means a self-propelled tank vessel constructed or adapted primarily to carry oil or hazardous material in bulk in the cargo spaces.

Tank vessel means a vessel that is constructed or adapted to carry, or that carries, oil or hazardous material in bulk as cargo or cargo residue, and that—

(a) Is a vessel of the United States;

(b) Operates on the navigable waters of the United States; or

(c) Transfers oil or hazardous material in a port or place subject to the jurisdiction of the United States.

Transfer means any movement of oil or hazardous material to, from, or within a vessel by means of pumping, gravitation, or displacement. A transfer is considered to begin when the person in charge on the transferring vessel or facility and the person in charge on the receiving facility or vessel first meet to begin completing the declaration of inspection as required by §156.150 of this chapter. A transfer is considered to be complete when all the connections for the transfer have been uncoupled and secured with blanks or other closure devices and both of the persons in charge have completed the declaration of inspection to include the date and time the transfer was complete.

Vessel operator means a person who owns, operates, or is responsible for the operation of a vessel.

[CGD 75–124, 45 FR 7169, Jan. 31, 1980, as amended by CGD 86–034, 55 FR 36252, Sept. 4, 1990;

CGD 79–116, 60 FR 17141, Apr. 4, 1995; CGD 93–056, 61 FR 41458, Aug. 8, 1996; 62 FR 3610, Jan. 24, 1997; CGD 79–116, 62 FR 25125, May 8, 1997]

§ 154.106 Incorporation by reference: Where can I get a copy of the publications incorporated by reference in this part?

top

(a) Certain material is incorporated by reference (IBR) into this part with the approval of the Director of the Federal Register under 5 U.S.C. 552(a) and 1 CFR part 51. To enforce any edition other than that specified in this section, the Coast Guard must publish notice of change in the Federal Register and the material must be available to the public. All approved material is available for inspection at the National Archives and Records Administration (NARA). For information on the availability of this material at NARA, call 202–741–6030 or go to *http://www.archives.gov/federal_register/code_of_federal_regulations/ibr_locations.html* . Also, it is available for inspection at the Coast Guard, Office of Port and Facility Activities, Cargo and Facilities Division (CG–5332), 2100 2nd St., SW., Stop 7363, Washington, DC 20593–7363, 202–372–2234 and is available from the sources indicated in this section below.

(b) American Petroleum Institute (API), 1220 L Street NW., Washington, DC 20037, 202–682–8000, *http://www.api.org/* :

(1) API Standard 2000, Venting Atmospheric and Low-Pressure Storage Tanks (Nonrefrigerated and Refrigerated), Third Edition, January 1982 (reaffirmed December 1987), IBR approved for §154.814.

(2) API Recommended Practice 550, Manual on Installation of Refinery Instruments and Control Systems, Part II—Process Stream Analyzers, Section 1—Oxygen Analyzers, Fourth Edition, February 1985, IBR approved for §154.824.

(c) American National Standards Institute (ANSI), 11 West 42nd Street, New York, NY 10036, 202–293–8020, *http://www.ansi.org* :

(1) ANSI B16.5, Steel Pipe Flanges and Flanged Fittings, 1988, IBR approved for §§154.500, 154.808, and 154.810.

(2) ANSI B16.24, Bronze Pipe Flanges and Flange Fittings Class 150 and 300, 1979, IBR approved for §§154.500 and 154.808.

(3) ANSI B31.3, Chemical Plant and Petroleum Refinery Piping, 1987 (including B31.3a–1988, B31.3b–1988, and B31.3c–1989 addenda), IBR approved for §§154.510 and 154.808.

(d) ASTM International, 100 Barr Harbor Drive, West Conshohocken, PA 19428–2959, 610–832–9585, *http://www.astm.org/* :

(1) ASTM F631–93, Standard Guide for Collecting Skimmer Performance Data in Controlled Environments, IBR approved for Appendix C.

(2) ASTM F715–95, Standard Test Methods for Coated Fabrics Used for Oil Spill Control and Storage, IBR approved for Appendix C.

(3) ASTM F722–82 (1993), Standard Specification for Welded Joints for Shipboard Piping Systems, IBR approved for Appendix A and Appendix B.

(4) ASTM F1122–87 (1992), Standard Specification for Quick Disconnect Couplings, IBR approved for §154.500.

(5) ASTM F1155–98, Standard Practice for Selection and Application of Piping System Materials, IBR approved for Appendix A and Appendix B.

(6) ASTM F1413–07, Standard Guide for Oil Spill Dispersant Application Equipment: Boom and Nozzle Systems, IBR approved for §154.1045.

(7) ASTM F1737–07, Standard Guide for Use of Oil Spill Dispersant Application Equipment During Spill Response: Boom and Nozzle Systems, IBR approved for §154.1045.

(8) ASTM F1779–08, Standard Practice for Reporting Visual Observations of Oil on Water, IBR

approved for §154.1045.

(e) International Electrotechnical Commission (IEC), Bureau Central de la Commission Electrotechnique Internationale, 1 rue de Varembe, Geneva, Switzerland, +41–22–919–02–11, *http://www.iec.ch/* :

(1) IEC 309–1—Plugs, Socket-Outlets and Couplers for Industrial Purposes: Part 1, General Requirements, 1979, IBR approved for §154.812.

(2) IEC 309–2—Plugs, Socket-Outlets and Couplers for Industrial Purposes: Part 2, Dimensional Interchangeability Requirements for Pin and Contact-tube Accessories, 1981, IBR approved for §154.812.

(f) National Electrical Manufacturers Association (NEMA), 1300 North 17th Street, Suite 1752, Rosslyn, Virginia 22209, 703–841–3200, *http://www.nema.org/* :

(1) ANSI NEMA WD–6—Wiring Devices, Dimensional Requirements, 1988, IBR approved for §154.812.

(2) [Reserved]

(g) National Fire Protection Association (NFPA), 1 Batterymarch Park, Quincy, MA 02269–9101, 617–770–3000, *http://www.nfpa.org/* :

(1) NFPA 51B, Standard for Fire Prevention in Use of Cutting and Welding Processes, 1994, IBR approved for §154.735.

(2) NFPA 70, National Electrical Code, 2008, IBR approved for §154.812.

(h) Oil Companies International Marine Forum (OCIMF), 29 Queen Anne's Gate, London, SW1H 9BU, England, +44–0–20–7654–1200, *http://www.ocimf.com/* :

(1) International Safety Guide for Oil Tankers and Terminals, Section 6.10, Fourth Ed., 1996, IBR approved for §154.810.

(2) International Safety Guide for Oil Tankers and Terminals, Sections 9.1, 9.2, 9.3 and 9.5, Fourth Ed., 1996, IBR approved for §154.735.

[USCG–2001–8661, 74 FR 45022, Aug. 31, 2009, as amended at USCG–2010–0351, 75 FR 36284, June 25, 2010]

§ 154.107 Alternatives.

top

(a) The COTP may consider and approve alternative procedures, methods, or equipment standards to be used by a facility operator in lieu of any requirement in this part if:

(1) Compliance with the requirement is economically or physically impractical;

(2) The alternative provides an equivalent level of safety and protection from pollution by oil or hazardous material, which is documented in the request; and

(3) The facility operator submits a written request for the alternative.

(b) The COTP takes final approval or disapproval action on the request, submitted in accordance with paragraph (a) of this section, in writing within 30 days of receipt of the request.

[CGD 75–124, 45 FR 7169, Jan. 31, 1980, as amended by CGD 86–034, 55 FR 36252, Sept. 4, 1990; CGD 93–056, 61 FR 41458, Aug. 8, 1996]

§ 154.108 Exemptions.

top

(a) The Assistant Commandant for Marine Safety, Security and Environmental Protection, acting for the

Commandant, grants an exemption or partial exemption from compliance with any requirement in this part if:

(1) A facility operator submits an application for the exemption via the COTP; and

(2) It is determined, from the application, that:

(i) Compliance with the requirement is economically or physically impractical;

(ii) No alternative procedures, methods, or equipment standards exist that would provide an equivalent level of safety and protection from pollution by oil or hazardous material; and

(iii) The likelihood of oil or hazardous material being discharged is not substantially increased as a result of the exemption.

(b) If requested, the applicant must submit any appropriate information, including an environmental and economic assessment of the effects of and reasons for the exemption, and proposed procedures, methods or equipment standards.

(c) The exemption may specify the procedures, methods, or equipment standards that will apply.

(d) An exemption is granted or denied in writing. The decision of the Assistant Commandant for Marine Safety, Security and Environmental Protection is a final agency action.

[CGD 75–124, 45 FR 7169, Jan. 31, 1980, as amended by CGD 88–052, 53 FR 25122, July 1, 1988; CGD 86–034, 55 FR 36252, Sept. 4, 1990; 55 FR 49997, Dec. 4, 1990; CGD 96–026, 61 FR 33666, June 28, 1996; CGD 93–056, 61 FR 41458, Aug. 8, 1996; CGD 97–023, 62 FR 33364, June 19, 1997; USCG–2002–12471, 67 FR 41333, June 18, 2002]

§ 154.110 Letter of intent.

top

(a) The facility operator of any facility to which this part applies must submit a letter of intent to operate a facility or to conduct mobile facility operations to the COTP not less than 60 days before the intended operations unless a shorter period is allowed by the COTP. Previously submitted letters of intent need not be resubmitted.

(b) The letter of intent required by paragraph (a) of this section may be in any form but must contain:

(1) The names, addresses, and telephone numbers of the facility operator and the facility owner;

(2) The name, address, and telephone number of the facility or, in the case of a mobile facility, the dispatching office; and

(3) Except for a mobile facility, the geographical location of the facility in relation to the associated body of navigable waters.

(c) The facility operator of any facility for which a letter of intent has been submitted, shall within five (5) days advise the COTP in writing of any changes of information and shall cancel, in writing, the letter for any facility at which transfer operations are no longer conducted.

[CGD 75–124, 45 FR 7169, Jan. 31, 1980, as amended by CGD 86–034, 55 FR 36252, Sept. 4, 1990; CGD 93–056, 61 FR 41458, Aug. 8, 1996]

§ 154.120 Facility examinations.

top

(a) The facility operator shall allow the Coast Guard, at any time, to make any examination and shall perform, upon request, any test to determine compliance with this part and part 156, as applicable. The facility operator shall conduct all required testing of facility equipment in a manner acceptable to the Coast Guard.

(b) The COTP shall provide the facility operator with a written report of the results of the examination for

the record required by §154.740(e) and shall list the deficiencies in the report when the facility is not in compliance with the requirements in this part and part 156 of this chapter.

[CGD 75–124, 45 FR 7169, Jan. 31, 1980]

Subpart B—Operations Manual

top

§ 154.300 Operations manual: General.

top

(a) The facility operator of each facility to which this part applies shall submit, with the letter of intent, two copies of an Operations Manual that:

(1) Describes how the applicant meets the operating rules and equipment requirements prescribed by this part and part 156 of this chapter;

(2) Describes the responsibilities of personnel under this part and part 156 of this chapter in conducting transfer operations; and

(3) Includes translations into a language or languages understood by all designated persons in charge of transfer operations employed by the facility.

(b) The facility operator shall maintain the operations manual so that it is:

(1) Current; and

(2) Readily available for examination by the COTP.

(c) The COTP shall examine the Operations Manual when submitted, after any substantial amendment, and as otherwise required by the COTP.

(d) In determining whether the manual meets the requirements of this part and part 156 of this chapter the COTP shall consider the size, complexity, and capability of the facility.

(e) If the manual meets the requirements of this part and part 156 of this chapter, the COTP will return one copy of the manual marked "Examined by the Coast Guard" as described in §154.325.

(f) The facility operator shall ensure that a sufficient number of copies of the examined Operations Manual, including a sufficient number of the translations required by paragraph (a)(3) of this section, are readily available for each facility person in charge while conducting a transfer operation.

Note: The facility operator may request that the contents of the operations manual or portions thereof be considered commercial or financial information that is privileged or confidential. Under the Freedom of Information Act, the Coast Guard would withhold any part of the contents of the operations manual from public disclosure upon determining that it is commercial or financial information that is privileged or confidential.

[CGD 75–124, 45 FR 7169, Jan. 31, 1980, as amended by CGD 86–034, 55 FR 36253, Sept. 4, 1990; CGD 93–056, 61 FR 41458, Aug. 8, 1996]

§ 154.310 Operations manual: Contents.

top

(a) Each operations manual required by §154.300 must contain:

(1) The geographic location of the facility;

(2) A physical description of the facility including a plan and/or plans, maps, drawings, aerial photographs or diagrams, showing the boundaries of the facility subject to Coast Guard jurisdiction,

mooring areas, transfer locations, control stations, wharfs, the extent and scope of the piping subject to the tests required by §156.170(c)(4) of this chapter, and the locations of safety equipment. For mobile facilities, a physical description of the facility;

(3) The hours of operation of the facility;

(4) The sizes, types, and number of vessels that the facility can transfer oil or hazardous material to or from simultaneously;

(5) For each product transferred at the facility:

(i) Generic or chemical name; and

(ii) The following cargo information:

(*a*) The name of the cargo as listed under appendix II of annex II of MARPOL 73/78, Table 30.25–1 of 46 CFR 30.25–1, Table 151.05 of 46 CFR 151.05–1, or Table 1 of 46 CFR part 153.

(*b*) A description of the appearance of the cargo;

(*c*) A description of the odor of the cargo;

(*d*) The hazards involved in handling the cargo;

(*e*) Instructions for safe handling of the cargo;

(*f*) The procedures to be followed if the cargo spills or leaks, or if a person is exposed to the cargo; and

(*g*) A list of fire fighting procedures and extinguishing agents effective with fires involving the cargo.

(6) The minimum number of persons on duty during transfer operations and their duties;

(7) The name and telephone number of the qualified individual identified under §154.1026 of this part and the title and/or position and telephone number of the Coast Guard, State, local, and other personnel who may be called by the employees of the facility in an emergency;

(8) The duties of watchmen, required by §155.810 of this chapter and 46 CFR 35.05–15, for unmanned vessels moored at the facility;

(9) A description of each communication system required by this part;

(10) The location and facilities of each personnel shelter, if any;

(11) A description and instructions for the use of drip and discharge collection and vessel slop reception facilities, if any;

(12) A description and the location of each emergency shutdown system;

(13) Quantity, types, locations, and instructions for use of monitoring devices if required by §154.525;

(14) Quantity, type, location, instructions for use, and time limits for gaining access to the containment equipment required by §154.545;

(15) Quantity, type, location, and instructions for use of fire extinguishing equipment required by §154.735(d) of this part;

(16) The maximum allowable working pressure (MAWP) of each loading arm, transfer pipe system, and hose assembly required to be tested by §156.170 of this chapter, including the maximum relief valve setting (or maximum system pressure when relief valves are not provided) for each transfer system;

(17) Procedures for:

(i) Operating each loading arm including the limitations of each loading arm;

(ii) Transferring oil or hazardous material;

(iii) Completion of pumping; and

(iv) Emergencies;

(18) Procedures for reporting and initial containment of oil or hazardous material discharges;

(19) A brief summary of applicable Federal, state, and local oil or hazardous material pollution laws and regulations;

(20) Procedures for shielding portable lighting authorized by the COTP under §154.570(c); and

(21) A description of the training and qualification program for persons in charge.

(22) Statements explaining that each hazardous materials transfer hose is marked with either the name of each product which may be transferred through the hose or with letters, numbers, symbols, color codes or other system acceptable to the COTP representing all such products and the location in the Operations Manual where a chart or list of symbols utilized is located and a list of the compatible products which may be transferred through the hose can be found for consultation before each transfer; and

(23) For facilities that conduct tank cleaning or stripping operations, a description of their procedures.

(b) If a facility collects vapors emitted from vessel cargo tanks for recovery, destruction, or dispersion, the operations manual must contain a description of the vapor collection system at the facility which includes:

(1) A line diagram or simplified piping and instrumentation diagram (P&ID) of the facility's vapor control system piping, including the location of each valve, control device, pressure-vacuum relief valve, pressure indicator, flame arrester, and detonation arrester; and

(2) A description of the vapor control system's design and operation including the:

(i) Vapor line connection;

(ii) Startup and shutdown procedures;

(iii) Steady state operating procedures;

(iv) Provisions for dealing with pyrophoric sulfide (for facilities which handle inerted vapors of cargoes containing sulfur);

(v) Alarms and shutdown devices; and

(vi) Pre-transfer equipment inspection requirements.

(c) The facility operator shall incorporate a copy of each amendment to the operations manual under §154.320 in each copy of the manual with the related existing requirement, or add the amendment at the end of each manual if not related to an existing requirement.

(d) The operations manual must be written in the order specified in paragraph (a) of this section, or contain a cross-referenced index page in that order.

(Approved by the Office of Management and Budget under control number 1625–0093)

[CGD 75–124, 45 FR 7171, Jan. 31, 1980, as amended by CGD 88–102, 55 FR 25428, June 21, 1990; CGD 86–034, 55 FR 36253, Sept. 4, 1990; CGD 92–027, 58 FR 39662, July 26, 1993; CGD 93–056, 61 FR 41459, Aug. 8, 1996; USCG–2006–25150, 71 FR 39209, July 12, 2006]

§ 154.320 Operations manual: Amendment.

top

(a) Using the following procedures, the COTP may require the facility operator to amend the operations manual if the COTP finds that the operations manual does not meet the requirements in this part:

(1) The COTP will notify the facility operator in writing of any inadequacies in the Operations Manual. The facility operator may submit written information, views, and arguments regarding the inadequacies identified, and proposals for amending the Manual, within 45 days from the date of the COTP notice. After considering all relevant material presented, the COTP shall notify the facility operator of any amendment required or adopted, or the COTP shall rescind the notice. The amendment becomes effective 60 days after the facility operator receives the notice, unless the facility operator petitions the Commandant to review the COTP's notice, in which case its effective date is delayed pending a decision by the Commandant. Petitions to the Commandant must be submitted in writing via the COTP who issued the requirement to amend the Operations Manual.

(2) If the COTP finds that there is a condition requiring immediate action to prevent the discharge or risk of discharge of oil or hazardous material that makes the procedure in paragraph (a)(1) of this section impractical or contrary to the public interest, the COTP may issue an amendment effective on the date the facility operator receives notice of it. In such a case, the COTP shall include a brief statement of the reasons for the findings in the notice. The owner or operator may petition the Commandant to review the amendment, but the petition does not delay the amendment.

(b) The facility operator may propose amendments to the operations manual by:

(1) Submitting any proposed amendment and reasons for the amendment to the COTP not less than 30 days before the requested effective date of the proposed amendment; or

(2) If an immediate amendment is needed, requesting the COTP to approve the amendment immediately.

(c) The COTP shall respond to proposed amendments submitted under paragraph (b) of this section by:

(1) Approving or disapproving the proposed amendments;

(2) Advising the facility operator whether the request is approved, in writing, before the requested date of the amendments;

(3) Including any reasons in the written response if the request is disapproved; and

(4) If the request is made under paragraph (b)(2) of this section immediately approving or rejecting the request.

(d) Amendments to personnel and telephone number lists required by §154.310(a)(7) of this part do not require examination by the COTP, but the COTP must be advised of such amendments as they occur.

[CGD 75–124, 45 FR 7171, Jan. 31, 1980, as amended by CGD 86–034, 55 FR 36253, Sept. 4, 1990; CGD 93–056, 61 FR 41459, Aug. 8, 1996]

§ 154.325 Operations manual: Procedures for examination.

top

(a) The operator of a facility shall submit two copies of the Operations Manual to the Captain of the Port of the zone in which the facility is located.

(b) Not less than 60 days prior to any transfer operation, the operator of a new facility shall submit, with the letter of intent, two copies of the Operations Manual to the Captain of the Port of the zone in which the facility is located.

(c) After a facility is removed from caretaker status, not less than 30 days prior to any transfer operation the operator of that facility shall submit two copies of the Operations Manual to the COTP of the zone in which the facility is located unless the manual has been previously examined and no changes have been made since the examination.

(d) If the COTP finds that the Operations Manual meets the requirements of this part and part 156 of this chapter, the COTP will return one copy of the manual to the operator marked “Examined by the Coast Guard”.

(e) If the COTP finds that the Operations Manual does not meet the requirements of this part and/or part 156 of this chapter, the COTP will return the manuals with an explanation of why it does not meet the requirements of this chapter.

(f) No person may use any Operations Manual for transfer operations as required by this chapter unless the Operations Manual has been examined by the COTP.

(g) The Operations Manual is voided if the facility operator—

(1) Amends the Operations Manual without following the procedures in §154.320 of this part;

(2) Fails to amend the Operations Manual when required by the COTP; or

(3) Notifies the COTP in writing that the facility will be placed in caretaker status.

[CGD 93–056, 61 FR 41459, Aug. 8, 1996]

Subpart C—Equipment Requirements

top

§ 154.500 Hose assemblies.

top

Each hose assembly used for transferring oil or hazardous material must meet the following requirements:

(a) The minimum design burst pressure for each hose assembly must be at least four times the sum of the pressure of the relief valve setting (or four times the maximum pump pressure when no relief valve is installed) plus the static head pressure of the transfer system, at the point where the hose is installed.

(b) The maximum allowable working pressure (MAWP) for each hose assembly must be more than the sum of the pressure of the relief valve setting (or the maximum pump pressure when no relief valve is installed) plus the static head pressure of the transfer system, at the point where the hose is installed.

(c) Each nonmetallic hose must be usable for oil or hazardous material service.

(d) Each hose assembly must either have:

(1) Full threaded connections;

(2) Flanges that meet ANSI B16.5 or B16.24 (both incorporated by reference; *see* §154.106); or

(3) Quick-disconnect couplings that meet ASTM F 1122 (incorporated by reference, see §154.106).

(e) Each hose must be marked with one of the following:

(1) The name of each product for which the hose may be used; or

(2) For oil products, the words “OIL SERVICE”; or

(3) For hazardous materials, the words “HAZMAT SERVICE—SEE LIST” followed immediately by a letter, number or other symbol that corresponds to a list or chart contained in the facility's operations manual or the vessel's transfer procedure documents which identifies the products that may be transferred through a hose bearing that symbol.

(f) Each hose also must be marked with the following, except that the information required by paragraphs (f)(2) and (3) of this section need not be marked on the hose if it is recorded in the hose records of the vessel or facility, and the hose is marked to identify it with that information:

(1) Maximum allowable working pressure;

(2) Date of manufacture; and

(3) Date of the latest test required by §156.170.

(g) The hose burst pressure and the pressure used for the test required by §156.170 of this chapter must not be marked on the hose and must be recorded elsewhere at the facility as described in paragraph (f) of this section.

(h) Each hose used to transfer fuel to a vessel that has a fill pipe for which containment can not practically be provided must be equipped with an automatic back pressure shutoff nozzle.

[CGD 75–124, 45 FR 7172, Jan. 31, 1980, as amended by CGD 86–034, 55 FR 36253, Sept. 4, 1990; CGD 88–032, 56 FR 35820, July 29, 1991; CGD 92–027, 58 FR 39662, July 26, 1993; CGD 93–056, 61 FR 41459, Aug. 8, 1996; USCG–2000–7223, 65 FR 40057, June 29, 2000; USCG–2001–8661, 74 FR 45022, Aug. 31, 2009]

§ 154.510 Loading arms.

top

(a) Each mechanical loading arm used for transferring oil or hazardous material and placed into service after June 30, 1973, must meet the design, fabrication, material, inspection, and testing requirements in ANSI B31.3 (incorporated by reference; *see* §154.106).

(b) The manufacturer's certification that the standard in paragraph (a) of this section has been met must be permanently marked on the loading arm or recorded elsewhere at the facility with the loading arm marked to identify it with that information.

(c) Each mechanical loading arm used for transferring oil or hazardous material must have a means of being drained or closed before being disconnected after transfer operations are completed.

[CGD 75–124, 45 FR 7172, Jan. 31, 1980, as amended by CGD 86–034, 55 FR 36253, Sept. 4, 1990; USCG–2001–8661, 74 FR 45022, Aug. 31, 2009]

§ 154.520 Closure devices.

top

(a) Except as provided in paragraph (b) of this section, each facility to which this part applies must have enough butterfly valves, wafer-type resilient seated valves, blank flanges, or other means acceptable to the COTP to blank off the ends of each hose or loading arm that is not connected for the transfer of oil or hazardous material. Such hoses and/or loading arms must be blanked off during the transfer of oil or hazardous material. A suitable material in the joints and couplings shall be installed on each end of the hose assembly or loading arm not being used for transfer to ensure a leak-free seal.

(b) A new, unused hose, and a hose that has been cleaned and is gas free, is exempt from the requirements of paragraph (a) of this section.

[CGD 93–056, 61 FR 41459, Aug. 8, 1996]

§ 154.525 Monitoring devices.

top

The COTP may require the facility to install monitoring devices if the installation of monitoring devices at the facility would significantly limit the size of a discharge of oil or hazardous material and either:

(a) The environmental sensitivity of the area requires added protection;

(b) The products transferred at the facility pose a significant threat to the environment; or

(c) The size or complexity of the transfer operation poses a significant potential for a discharge of oil or hazardous material.

[CGD 75–124, 45 FR 7172, Jan. 31, 1980, as amended by CGD 86–034, 55 FR 36253, Sept. 4, 1990]

§ 154.530 Small discharge containment.

top

(a) Except as provided in paragraphs (c), (d), and (e) of this section, each facility to which this part applies must have fixed catchments, curbing, or other fixed means to contain oil or hazardous material discharged in at least—

(1) Each hose handling and loading arm area (that area on the facility that is within the area traversed by the free end of the hose or loading arm when moved from its normal stowed or idle position into a position for connection);

(2) Each hose connection manifold area; and

(3) Under each hose connection that will be coupled or uncoupled as part of the transfer operation during coupling, uncoupling, and transfer.

(b) The discharge containment means required by paragraph (a) of this section must have a capacity of at least:

(1) Two barrels if it serves one or more hoses of 6-inch inside diameter or smaller, or loading arms of 6-inch nominal pipe size diameter or smaller;

(2) Three barrels if it serves one or more hoses with an inside diameter of more than 6-inches, but less than 12 inches, or loading arms with a nominal pipe size diameter of more than 6 inches, but less than 12 inches; or

(3) Four barrels if it serves one or more hoses of 12-inch inside diameter or larger, or loading arms of 12-inch nominal pipe size diameter or larger.

(c) The facility may use portable means of not less than1/2barrel capacity each to meet the requirements of paragraph (a) of this section for part or all of the facility if the COTP finds that fixed means to contain oil or hazardous material discharges are not feasible.

(d) A mobile facility may have portable means of not less than five gallons capacity to meet the requirements of paragraph (a) of this section.

(e) Fixed or portable containment may be used to meet the requirements of paragraph (a)(3) of this section.

[CGD 75–124, 45 FR 7172, Jan. 31, 1980, as amended by CGD 86–034, 55 FR 36253, Sept. 4, 1990; CGD 93–056, 61 FR 41460, Aug. 8, 1996]

§ 154.540 Discharge removal.

top

Each facility to which this part applies must have a means to safely remove discharged oil or hazardous material, within one hour of completion of the transfer, from the containment required by §154.530 of this part without discharging the oil or hazardous material into the water.

[CGD 93–056, 61 FR 41460, Aug. 8, 1996]

§ 154.545 Discharge containment equipment.

top

(a) Each facility must have ready access to enough containment material and equipment to contain any oil or hazardous material discharged on the water from operations at that facility.

(b) For the purpose of this section, “access” may be by direct ownership, joint ownership, cooperative venture, or contractual agreement.

(c) Each facility must establish time limits, subject to approval by the COTP, for deployment of the containment material and equipment required by paragraph (a) of this section considering:

(1) Oil or hazardous material handling rates;

(2) Oil or hazardous material capacity susceptible to being spilled;

(3) Frequency of facility operations;

(4) Tidal and current conditions;

(5) Facility age and configuration; and

(6) Past record of discharges.

(d) The COTP may require a facility to surround each vessel conducting an oil or hazardous material transfer operation with containment material before commencing a transfer operation if—

(1) The environmental sensitivity of the area requires the added protection;

(2) The products transferred at the facility pose a significant threat to the environment;

(3) The past record of discharges at the facility is poor; or

(4) The size or complexity of the transfer operation poses a significant potential for a discharge of oil or hazardous material; and

(5) The use of vessel containment provides the only practical means to reduce the extent of environmental damage.

(e) Equipment and procedures maintained to satisfy the provisions of this chapter may be utilized in the planning requirements of subpart F and subpart H of this part.

[CGD 75–124, 45 FR 7172, Jan. 31, 1980, as amended by CGD 86–034, 55 FR 36253, Sept. 4, 1990; CGD 93–056, 61 FR 41460, Aug. 8, 1996; USCG–1999–5149, 65 FR 40825, June 30, 2000]

§ 154.550 Emergency shutdown.

top

(a) The facility must have an emergency means to enable the person in charge of the transfer on board the vessel, at that person's usual operating station, to stop the flow of oil or hazardous material from the facility to the vessel. The means must be—

(1) An electrical, pneumatic, or mechanical linkage to the facility; or

(2) An electronic voice communications system continuously operated by a person on the facility who can stop the flow of oil or hazardous material immediately.

(b) The point in the transfer system at which the emergency means stops the flow of oil or hazardous material on the facility must be located near the dock manifold connection to minimize the loss of oil or hazardous material in the event of the rupture or failure of the hose, loading arm, or manifold valve.

(c) For oil transfers, the means used to stop the flow under paragraph (a) of this section must stop that flow within—

(1) 60 seconds on any facility or portion of a facility that first transferred oil on or before November 1, 1980; and

(2) 30 seconds on any facility that first transfers oil after November 1, 1980.

(d) For hazardous material transfers, the means used to stop the flow under paragraph (a) of this section must stop that flow within—

(1) 60 seconds on any facility or portion of a facility that first transferred hazardous material before October 4, 1990; and

(2) 30 seconds on any facility that first transfers hazardous material on or after October 4, 1990.

[CGD 86–034, 55 FR 36253, Sept. 4, 1990]

§ 154.560 Communications.

top

(a) Each facility must have a means that enables continuous two-way voice communication between the person in charge of the vessel transfer operation and the person in charge of the facility transfer operation.

(b) Each facility must have a means, which may be the communications system itself, that enables a person on board a vessel or on the facility to effectively indicate the desire to use the means of communication required by paragraph (a) of this section.

(c) The means required by paragraph (a) of this section must be usable and effective in all phases of the transfer operation and all conditions of weather at the facility.

(d) A facility may use the system in §154.550(a)(2) to meet the requirement of paragraph (a) of this section.

(e) Portable radio devices used to comply with paragraph (a) of this section during the transfer of flammable or combustible liquids must be marked as intrinsically safe by the manufacturer of the device and certified as intrinsically safe by a national testing laboratory or other certification organization approved by the Commandant as defined in 46 CFR 111.105–11. As an alternative to the marking requirement, facility operators may maintain documentation at the facility certifying that the portable radio devices in use at the facility are in compliance with this section.

[CGD 75–124, 45 FR 7172, Jan. 31, 1980; 45 FR 43705, June 30, 1980, as amended by CGD 93–056, 61 FR 41460, Aug. 8, 1996]

§ 154.570 Lighting.

top

(a) Except as provided in paragraph (c) of this section, for operations between sunset and sunrise, a facility must have fixed lighting that adequately illuminates:

(1) Each transfer connection point on the facility;

(2) Each transfer connection point in use on any barge moored at the facility to or from which oil or hazardous material is being transferred;

(3) Each transfer operations work area on the facility; and

(4) Each transfer operation work area on any barge moored at the facility to or from which oil or hazardous material is being transferred.

(b) Where the illumination is apparently inadequate, the COTP may require verification by instrument of the levels of illumination. On a horizontal plane 3 feet above the barge deck or walking surface, illumination must measure at least:

(1) 5.0 foot candles at transfer connection points; and

(2) 1.0 foot candle in transfer operations work areas.

(c) For small or remote facilities, the COTP may authorize operations with an adequate level of illumination provided by the vessel or by portable means.

(d) Lighting must be located or shielded so as not to mislead or otherwise interfere with navigation on the adjacent waterways.

[CGD 75–124, 45 FR 7172, Jan. 31, 1980, as amended by CGD 86–034, 55 FR 36253, Sept. 4, 1990]

Subpart D—Facility Operations

top

§ 154.700 General.

top

No person may operate a facility unless the equipment, personnel, and operating procedures of that facility meet the requirements of this part.

[CGD 75–124, 45 FR 7173, Jan. 31, 1980]

§ 154.710 Persons in charge: Designation and qualification.

top

No person may serve, and the facility operator may not use the services of a person, as person in charge of facility transfer operations unless:

(a) The facility operator has designated that person as a person in charge;

(b) The person has had at least 48 hours of experience in transfer operations at a facility in operations to which this part applies. The person also has enough experience at the facility for which qualification is desired to enable the facility operator to determine that the person's experience is adequate;

(c) The person has completed a training and qualification program established by the facility operator and described in the Operations Manual in accordance with §154.310(a)(21), that provides the person with the knowledge and training necessary to properly operate the transfer equipment at the facility, perform the duties described in paragraph (d) of this section, follow the procedures required by this part, and fulfill the duties required of a person in charge during an emergency, except that the COTP may approve alternative experience and training requirements for new facilities; and

(d) The facility operator must certify that each person in charge has the knowledge of, and skills necessary to—

(1) The hazards of each product to be transferred;

(2) The rules in this part and in part 156 of this chapter;

(3) The facility operating procedures as described in the operations manual;

(4) Vessel transfer systems, in general;

(5) Vessel transfer control systems, in general;

(6) Each facility transfer control system to be used;

(7) Follow local discharge reporting procedures; and

(8) Carry out the facility's response plan for discharge reporting and containment.

(e) Training conducted to comply with the hazard communication programs required by the Occupational Safety and Health Administration (OSHA) of the Department of Labor (DOL) (29 CFR 1910.1200) or the Environmental Protection Agency (EPA) (40 CFR 311.1), or to meet the requirements of subpart F of this part may be used to satisfy the requirements in paragraphs (c) and (d) of this section, as long as the training addresses the requirements in paragraphs (c) and (d) of this section.

(Sec. 311(j)(1)(C) of the Federal Water Pollution Control Act (86 Stat. 816, 868); 33 U.S.C. 1161(j)(1)(C); EO 11548, 3 CFR, 1966–1970 Comp., p. 949; 49 CFR 1.46(m))

[CGD 71–160R, 37 FR 28253, Dec. 21, 1972, as amended by CGD 86–034, 55 FR 36253, Sept. 4, 1990; CGD 93–056, 61 FR 41460, Aug. 8, 1996]

§ 154.730 Persons in charge: Evidence of designation.

top

Each person in charge shall carry evidence of his designation as a person in charge when he is engaged in transfer operations unless such evidence is immediately available at the facility.

(Sec. 311(j)(1)(C) of the Federal Water Pollution Control Act (86 Stat. 816, 868); 33 U.S.C. 1161(j)(1)(C); EO 11548, 3 CFR, 1966–1970 Comp., p. 949; 49 CFR 1.46(m))

[CGD 71–160R, 37 FR 28253, Dec. 21, 1972]

§ 154.735 Safety requirements.

top

Each operator of a facility to which this part applies shall ensure that the following safety requirements are met at the facility:

(a) Access to the facility by firefighting personnel, fire trucks, or other emergency personnel is not impeded.

(b) Materials which are classified as hazardous under 49 CFR parts 170 through 179 are kept only in the quantities needed for the operation or maintenance of the facility and are stored in storage compartments.

(c) Gasoline or other fuel is not stored on a pier, wharf, or other similar structure.

(d) A sufficient number of fire extinguishers approved by an independent laboratory listed in 46 CFR 162.028–5 for fighting small, localized fires are in place throughout the facility and maintained in a ready condition.

(e) The location of each hydrant, standpipe, hose station, fire extinguisher, and fire alarm box is conspicuously marked and readily accessible.

(f) Each piece of protective equipment is ready to operate.

(g) Signs indicating that smoking is prohibited are posted in areas where smoking is not permitted.

(h) Trucks and other motor vehicles are operated or parked only in designated locations.

(i) All rubbish is kept in receptacles.

(j) All equipment with internal combustion engines used on the facility—

(1) Does not constitute a fire hazard; and

(2) Has a fire extinguisher attached that is approved by an independent laboratory listed in 46 CFR 162.028–5, unless such a fire extinguisher is readily accessible nearby on the facility.

(k) Spark arresters are provided on chimneys or appliances which—

(1) Use solid fuel; or

(2) Are located where sparks constitute a hazard to nearby combustible material.

(l) All welding or hot work conducted on or at the facility is the responsibility of the facility operator. The COTP may require that the operator of the facility notify the COTP before any welding or hot work operations are conducted. Any welding or hot work operations conducted on or at the facility must be conducted in accordance with NFPA 51B (incorporated by reference; *see* §154.106). The facility operator shall ensure that the following additional conditions or criteria are met:

(1) Welding or hot work is prohibited during gas freeing operations, within 30.5 meters (100 feet) of bulk cargo operations involving flammable or combustible materials, within 30.5 meters (100 feet) of fueling

operations, or within 30.5 meters (100 feet) of explosives or 15.25 meters (50 feet) of other hazardous materials.

(2) If the welding or hot work is on the boundary of a compartment (*i.e.* , bulkhead, wall or deck) an additional fire watch shall be stationed in the adjoining compartment.

(3) Personnel on fire watch shall have no other duties except to watch for the presence of fire and to prevent the development of hazardous conditions.

(4) Flammable vapors, liquids or solids must first be completely removed from any container, pipe or transfer line subject to welding or hot work.

(5) Tanks used for storage of flammable or combustible substances must be tested and certified gas free prior to starting hot work.

(6) Proper safety precautions in relation to purging, inserting, or venting shall be followed for hot work on containers;

(7) All local laws and ordinances shall be observed;

(8) In case of fire or other hazard, all cutting, welding or other hot work equipment shall be completely secured.

(m) Heating equipment has sufficient clearance to prevent unsafe heating of nearby combustible material.

(n) Automotive equipment having an internal combustion engine is not refueled on a pier, wharf, or other similar structure.

(o) There are no open fires or open flame lamps.

(p) Electric wiring and equipment is maintained in a safe condition so as to prevent fires.

(q) Electrical wiring and electrical equipment installed after October 4, 1990, meet NFPA 70.

(r) Electrical equipment, fittings, and devices installed after October 4, 1990, show approval for that use by—

(1) Underwriters Laboratories;

(2) Factory Mutual Research Corporation; or

(3) Canadian Standards Association.

(s) Tank cleaning or gas freeing operations conducted by the facility on vessels carrying oil residues or mixtures shall be conducted in accordance with sections 9.1, 9.2, 9.3, and 9.5 of the OCIMF International Safety Guide for Oil Tankers and Terminals (ISGOTT) (incorporated by reference; *see* §154.106), except that—

(1) Prohibitions in ISGOTT against the use of recirculated wash water do not apply if the wash water is first processed to remove product residues;

(2) The provision in ISGOTT section 9.2.10 concerning flushing the bottom of tanks after every discharge of leaded gasoline does not apply;

(3) The provision in ISGOTT section 9.2.11 concerning that removal of sludge, scale, and sediment does not apply if personnel use breathing apparatus which protect them from the tank atmosphere; and

(4) Upon the request of the facility owner or operator in accordance with §154.107, the COTP may approve the use of alternative standards to ISGOTT if the COTP determines that the alternative standards provide an equal level of protection to the ISGOTT standards.

(t) Guards are stationed, or equivalent controls acceptable to the COTP are used to detect fires, report emergency conditions, and ensure that access to the marine transfer area is limited to—

(1) Personnel who work at the facility including persons assigned for transfer operations, vessel

personnel, and delivery and service personnel in the course of their business;

(2) Coast Guard personnel;

(3) Other Federal, State, or local governmental officials; and

(4) Other persons authorized by the operator.

(u) Smoking shall be prohibited at the facility except that facility owners or operators may authorize smoking in designated areas if—

(1) Smoking areas are designated in accordance with local ordinances and regulations;

(2) Signs are conspicuously posted marking such authorized smoking areas; and

(3) "No Smoking" signs are conspicuously posted elsewhere on the facility.

(v) Warning signs shall be displayed on the facility at each shoreside entry to the dock or berth, without obstruction, at all times for fixed facilities and for mobile facilities during coupling, transfer operation, and uncoupling. The warning signs shall conform to 46 CFR 151.45–2(e)(1) or 46 CFR 153.955.

[CGD 86–034, 55 FR 36253, Sept. 4, 1990, as amended by CGD 93–056, 61 FR 41460, Aug. 8, 1996; USCG–2001–8661, 74 FR 45022, Aug. 31, 2009]

§ 154.740 Records.

top

Each facility operator shall maintain at the facility and make available for examination by the COTP:

(a) A copy of the letter of intent for the facility;

(b) The name of each person designated as a person in charge of transfer operations at the facility and certification that each person in charge has completed the training requirements of §154.710 of this part;

(c) The date and result of the most recent test or examination of each item tested or examined under §156.170 of this chapter;

(d) The hose information required by §154.500 (e) and (g) except that marked on the hose;

(e) The record of all examinations of the facility by the COTP within the last 3 years;

(f) The Declaration of Inspection required by §156.150(f) of this chapter;

(g) A record of all repairs made within the last three years involving any component of the facility's vapor control system required by subpart E of this part;

(h) A record of all automatic shut downs of the facility's vapor control system within the last 3 years; and

(i) Plans, calculations, and specifications of the facility's vapor control system certified under §154.804 of this part.

(j) If they are not marked as such, documentation that the portable radio devices in use at the facility under §154.560 of this part are intrinsically safe.

(Approved by the Office of Management and Budget under control number 1625–0060)

[CGD 75–124, 45 FR 7173, Jan. 31, 1980, as amended by CGD 88–102, 55 FR 25429, June 21, 1990; CGD 86–034, 55 FR 36254, Sept. 4, 1990; CGD 93–056, 61 FR 41461, Aug. 8, 1996; USCG–2006–25150, 71 FR 39209, July 12, 2006]

§ 154.750 Compliance with operations manual.

top

The facility operator shall require facility personnel to use the procedures in the operations manual prescribed by §154.300 for operations under this part.

[CGD 75–124, 45 FR 7174, Jan. 31, 1980]

Subpart E—Vapor Control Systems

top

Source: CGD 88–102, 55 FR 25429, June 21, 1990, unless otherwise noted.

§ 154.800 Applicability.

top

(a) Except as specified by paragraph (c) of this section, this subpart applies to:

(1) Each facility which collects vapors of crude oil, gasoline blends, or benzene emitted from vessel cargo tanks;

(2) A vessel which is not a tank vessel that has a vapor processing unit located on board for recovery, destruction, or dispersion of crude oil, gasoline blends, or benzene vapors from a tank vessel; and

(3) Certifying entities which review, inspect, test, and certify facility vapor control systems.

(b) A facility which collects vapors of flammable or combustible cargoes other than crude oil, gasoline blends, or benzene, must meet the requirements prescribed by the Commandant (CG–522).

(c) A facility with an existing Coast Guard approved vapor control system which was operating prior to July 23, 1990 is subject only to §154.850 of this subpart as long as it receives cargo vapor only from the specific vessels for which it was approved.

(d) This subpart does not apply to the collection of vapors of liquefied flammable gases as defined in 46 CFR 30.10–39.

(e) When a facility vapor control system which receives cargo vapor from a vessel is connected to a facility vapor control system that serves tank storage areas and other refinery processes, the specific requirements of this subpart apply between the vessel vapor connection and the point where the vapor control system connects to the facility's main vapor control system.

[CGD 88–102, 55 FR 25429, June 21, 1990, as amended by CGD 96–026, 61 FR 33666, June 28, 1996; USCG–2010–0351, 75 FR 36284, June 25, 2010]

§ 154.802 Definitions.

top

As used in this subpart:

Certifying entity means an individual or organization accepted by the Commandant (CG–522) to review plans and calculations for vapor control system designs, and to conduct initial inspections and witness tests of vapor control system installations.

Existing vapor control system means a vapor control system which was operating prior to July 23, 1990.

Facility vapor connection means the point in a facility's vapor collection system where it connects to a vapor collection hose or the base of a vapor collection arm.

Inerted means the oxygen content of the vapor space in a tank vessel's cargo tank is reduced to 8 percent by volume or less in accordance with the inert gas requirements of 46 CFR 32.53 or 46 CFR 153.500.

Liquid knockout vessel means a device to separate liquid from vapor.

Maximum allowable transfer rate means the maximum volumetric rate at which a vessel may receive cargo or ballast.

New vapor control system means a vapor control system which is not an existing vapor control system.

Vapor balancing means the transfer of vapor displaced by incoming cargo from the tank of a vessel receiving cargo into a tank of the vessel or facility delivering cargo via a vapor collection system.

Vapor collection system means an arrangement of piping and hoses used to collect vapor emitted from a vessel's cargo tanks and transport the vapor to a vapor processing unit.

Vapor control system means an arrangement of piping and equipment used to control vapor emissions collected from a vessel, and includes the vapor collection system and the vapor processing unit.

Vapor destruction unit means a vapor processing unit that destroys cargo vapor by a means such as incineration.

Vapor dispersion system means a vapor processing unit which releases cargo vapor to the atmosphere through a venting system not located on the vessel being loaded or ballasted.

Vapor processing unit means the components of a vapor control system that recovers, destroys, or disperses vapor collected from a vessel.

Vapor recovery unit means a vapor processing unit that recovers cargo vapor by a non-destructive means such as lean oil absorbtion, carbon bed adsorption, or refrigeration.

Vessel vapor connection means the point in a vessel's fixed vapor collection system where it connects to a vapor collection hose or arm.

[CGD 88–102, 55 FR 25429, June 21, 1990, as amended by CGD 96–026, 61 FR 33666, June 28, 1996; USCG–2010–0351, 75 FR 36284, June 25, 2010]

§ 154.804 Review, certification, and initial inspection.

top

(a) A new vapor control system installation must be certified by a certifying entity as meeting the requirements of this subpart prior to operating.

(b) [Reserved]

(c) An existing vapor control system installation that has been Coast Guard approved for operation with specific vessels must be certified by a certifying entity prior to receiving vapors from other vessels.

(d) Plans and information submitted to the certifying entity must include a qualitative failure analysis. The analysis must demonstrate the following:

(1) The vapor control system is designed to permit the system to continuously operate safely when receiving cargo vapors from tankships and barges over the full range of transfer rates expected at the facility;

(2) The vapor control system is provided with the proper alarms and automatic control systems to prevent unsafe operation;

(3) The vapor control system is equipped with sufficient automatic or passive devices to minimize damage to personnel, property, and the environment if an accident were to occur; and

(4) If a quantitative failure analysis is also conducted, the level of safety attained is at least one order of magnitude greater than that calculated for operating without a vapor control system.

Note: The *American Institute of Chemical Engineers* publication, “Guidelines for Hazard Evaluation Procedures” may be used as guidance when preparing a qualitative failure analysis. Military Standard MIL-STD-882B may be used as guidance when preparing a

quantitative failure analysis.

(e) The certifying entity must conduct all initial inspections and witness all tests required to demonstrate that the facility:

(1) Conforms to certified plans and specifications;

(2) Meets the requirements of this subpart; and

(3) Is operating properly.

(f) Upon receipt of written certification from the certifying entity that a facility's vapor control system complies with the requirements of this part the COTP shall endorse the letter of adequacy required by §154.325 of this part to indicate that the facility is acceptable for collecting vapors of crude oil, gasoline blends, benzene, or any other vapors for which it is certified.

(g) Any design or configuration alteration involving a certified vapor control system must be reviewed by a certifying entity. After conducting any inspections and witnessing tests necessary to verify that the modified vapor control system meets the requirements of this subpart, the certifying entity must recertify the installation.

(h) Certifications issued in accordance with this section and a copy of the plans, calculations, and specifications for the vapor control system must be maintained at the facility.

(i) A certifying entity accepted under §154.806 of this subpart may not certify a facility vapor control system if it was involved in the design or installation of the system.

(Approved by the Office of Management and Budget under control number 1625–0060)

[CGD 88–102, 55 FR 25429, June 21, 1990, as amended by USCG–1998–3799, 63 FR 35531, June 30, 1998; USCG–2006–25150, 71 FR 39209, July 12, 2006]

§ 154.806 Application for acceptance as a certifying entity.

top

(a) An individual or organization seeking acceptance as a certifying entity must apply in writing to the Commandant (Stop 7363, Washington, DC 20593–7363). Each application must be signed and certified to be correct by the applicant or, if the applicant is an organization, by an authorized officer or official representative of the organization, and must include a letter of intent from a facility owner or operator to use the services of the individual or organization to certify a vapor control system installation. Any false statement or misrepresentation, or the knowing and willful concealment of a material fact may subject the applicant to prosecution under the provisions of 18 U.S.C. 1001, and denial or termination of acceptance as a certifying entity.

(b) The applicant must possess the following minimum qualifications, and be able to demonstrate these qualifications to the satisfaction of the Commandant (Stop 7363, Washington, DC 20593–7363):

(1) The ability to review and evaluate design drawings and failure analyses;

(2) A knowledge of the applicable regulations of this subpart, including the standards incorporated by reference in these regulations;

(3) The ability to monitor and evaluate test procedures and results;

(4) The ability to perform inspections and witness tests of bulk liquid cargo handling systems;

(5) That it is not controlled by an owner or operator of a vessel or facility engaged in controlling vapor emissions; and

(6) That it is not dependent upon Coast Guard acceptance under this section to remain in business.

(c) Each application for acceptance must contain the following:

(1) The name and address of the applicant, including subsidiaries and divisions if applicable;

(2) A statement that the applicant is not controlled by an owner or operator of a vessel or facility engaged in controlling vapor emissions, or a full disclosure of any ownership or controlling interest held by such owners or operators;

(3) A description of the experience and qualifications of the person(s) who would be reviewing or testing the systems;

(4) A statement that the person(s) who would be reviewing or testing the systems is/are familiar with the regulations in this subpart; and

(5) A statement that the Coast Guard may verify the information submitted in the application and may examine the person(s) who would be reviewing or testing the systems to determine their qualifications.

(d) The acceptance of a certifying entity may be terminated by the Commandant (Stop 7363, Washington, DC 20593–7363) if the entity fails to properly review, inspect, or test a system in accordance with this subpart.

Note: A list of entities accepted to certify facility vapor control system installations is available from the Commandant (Stop 7363, Washington, DC 20593–7363).

(Approved by the Office of Management and Budget under control number 1625–0060)

[CGD 88–102, 55 FR 25429, June 21, 1990, as amended by CGD 96–026, 61 FR 33666, June 28, 1996; USCG–2006–25150, 71 FR 39210, July 12, 2006; USCG–2010–0351, 75 FR 36284, June 25, 2010]

§ 154.808 Vapor control system, general.

top

(a) A vapor control system design and installation must eliminate potential overfill hazards, overpressure and vacuum hazards, and sources of ignition to the maximum practical extent. Each remaining hazard source which is not eliminated must be specifically addressed in the protection system design and operational requirements.

(b) Vapor collection system piping and fittings must be in accordance with ANSI B31.3 (incorporated by reference; see §154.106) and designed for a maximum allowable working pressure of at least 150 psig. Valves and flanges must be in accordance with ANSI B16.5 or B16.24 (both incorporated by reference; see §154.106), 150 pound class.

(c) All electrical equipment used in a vapor control system must comply with NFPA 70.

(d) Any pressure, flow, or concentration indication required by this part must provide a remote indicator on the facility where the cargo transfer and vapor control systems are controlled.

(e) Any alarm condition specified in this part must activate an audible and visible alarm where the cargo transfer and vapor control systems are controlled.

(f) The vapor control system must be separated or insulated from external heat sources to limit vapor control system piping surface temperature to not more than 177 °C. (350 °F.) during normal operation.

(g) A means must be provided to eliminate any liquid condensate from the vapor collection system which carries over from the vessel or condenses as a result of an enrichment process.

(h) If a liquid knockout vessel is installed it must have:

(1) A means to indicate the level of liquid in the device;

(2) A high liquid level sensor that activates an alarm; and

(3) A high high level sensor that closes the remotely operated cargo vapor shutoff valve required by §154.810(a) of this subpart and shuts down any compressors or blowers prior to liquid carrying over from the vessel to the compressor or blower.

(i) Vapor collection piping must be electrically grounded and electrically continuous.

(j) If the facility handles inerted vapors of cargoes containing sulfur, provisions must be made to control heating from pyrophoric iron sulfide deposits in the vapor collection line.

[CGD 88–102, 55 FR 25429, June 21, 1990, as amended by USCG–2001–8661, 74 FR 45023, Aug. 31, 2009]

§ 154.810 Vapor line connections.

top

(a) A remotely operated cargo vapor shutoff valve must be installed in the vapor collection line between the facility vapor connection and the nearest point where any inerting, enriching, or diluting gas is introduced into the vapor collection line or where a detonation arrester is fitted. The valve must:

(1) Close within thirty (30) seconds after detection of a shutdown condition by a component required by this subpart;

(2) Close automatically if the control signal is lost;

(3) Activate an alarm when a signal to shut down is received;

(4) Be capable of manual operation or manual activation;

(5) Have a local valve position indicator or be designed so that the valve position can be readily determined from the valve handle or valve stem position; and

(6) If the valve seat is fitted with resilient material, not allow appreciable leakage when the resilient material is damaged or destroyed.

(b) Except when a vapor collection arm is used, the last 1.0 meter (3.3 feet) of vapor piping before the facility vapor connection must be:

(1) Painted red/yellow/red with:

(i) The red bands 0.1 meter (0.33 feet) wide, and

(ii) The middle yellow band 0.8 meter (2.64 feet) wide; and

(2) Labeled "VAPOR" in black letters at least 50 millimeters (2 inches) high.

(c) Each facility vapor connection flange must have a permanently attached 0.5 inch diameter stud at least 1.0 inch long projecting outward from the flange face. The stud must be located at the top of the flange, midway between bolt holes, and in line with the bolt hole pattern.

(d) Each hose used for transferring vapors must:

(1) Have a design burst pressure of at least 25 psig;

(2) Have a maximum allowable working pressure of at least 5 psig;

(3) Be capable of withstanding at least 2.0 psi vacuum without collapsing or constricting;

(4) Be electrically continuous with a maximum resistance of ten thousand (10,000) ohms;

(5) Have flanges with:

(i) A bolt hole arrangement complying with the requirements for 150 pound class ANSI B16.5 (incorporated by reference; *see* §154.106) flanges, and

(ii) One or more 0.625 inch diameter holes in the flange located midway between bolt holes and in line with the bolt hole pattern;

(6) Be abrasion resistant and resistant to kinking; and

(7) Have the last 1.0 meter (3.3 feet) of each end of the vapor hose marked in accordance with paragraph (b) of this section.

(e) Vapor hose handling equipment must be provided with hose saddles which provide adequate support to prevent kinking or collapse of hoses.

(f) Fixed vapor collection arms must:

(1) Meet the requirements of paragraphs (d)(1) through (d)(5) of this section;

(2) Have the last 1.0 meter (3.3 feet) of the arm marked in accordance with paragraph (b) of this section.

(g) The facility vapor connection must be electrically insulated from the vessel vapor connection in accordance with section 6.10 of the OCIMF International Safety Guide for Oil Tankers and Terminals (incorporated by reference; see §154.106).

(h) A vapor collection system fitted with an enriching system that operates at a positive gauge pressure at the facility vapor connection must be fitted with:

(1) A manual isolation valve between each facility vapor connection and the remotely operated cargo vapor shutoff valve required by paragraph (a) of this section; and

(2) A means to prevent backflow of enriched vapor to the vessel's vapor collection system.

[CGD 88–102, 55 FR 25429, June 21, 1990, as amended by USCG–2001–8661, 74 FR 45023, Aug. 31, 2009]

§ 154.812 Facility requirements for vessel liquid overfill protection.

top

(a) Each facility which receives cargo vapor from a tank barge which is fitted with overfill protection in accordance with 46 CFR 39.20–9(a) as its only means of overfill protection must provide a 120 volt, 20 amp explosion proof receptacle which meets:

(1) ANSI/NEMA WD6 (incorporated by reference; see §154.106);

(2) NFPA 70, National Electrical Code, Articles 410–57 and 501–12; incorporated by reference; *see* §154.106); and

(3) 46 CFR 111.105–9.

(b) Each facility that receives cargo vapor from a tank barge fitted with an intrinsically safe cargo tank level sensor system complying with 46 CFR 39.20–9(b) as its only means of overfill protection must have an overfill control panel on the dock capable of powering and receiving an alarm and shutdown signal from the cargo tank level sensor system that:

(1) Closes the remotely operated cargo vapor shutoff valve required by §154.810(a) of this subpart and activates the emergency shutdown system required by §154.550 of this part when:

(i) A tank overfill signal is received from the barge, or

(ii) Electrical continuity of the cargo tank level sensor system is lost;

(2) Activates an alarm which is audible and visible to barge personnel and facility personnel when a tank overfill signal, or an optional high level signal corresponding to a liquid level lower than the tank overfill sensor setting, is received from the barge;

(3) Has a means to electrically and mechanically test the alarms and automatic shutdown systems prior to transferring cargo to or ballasting the tank barge;

(4) Has suitable means, such as approved intrinsic safety barriers able to accept passive devices, to ensure that the overfill and optional alarm circuits on the barge side of the overfill control panel, including cabling, normally closed switches, and pin and sleeve connectors, are intrinsically safe;

(5) Is labeled with the maximum allowable inductance and capacitance to be connected to the panel, as specified by the equipment manufacturer; and

(6) Has a female connecting plug for the tank barge level sensor system with a 5 wire, 16 amp connector body meeting IEC 309–1/309–2 (incorporated by reference; *see* §154.106) which is:

(i) Configured with pins S2 and R1 for the tank overfill sensor circuit, pin G connected to the cabling shield, and pins N and T3 reserved for an optional high level alarm connection;

(ii) Labeled "Connector for Barge Overflow Control System"; and

(iii) Connected to the overfill control panel by a shielded flexible cable.

[CGD 88–102, 55 FR 25429, June 21, 1990, as amended by USCG–2001–8661, 74 FR 45023, Aug. 31, 2009]

§ 154.814 Facility requirements for vessel vapor overpressure and vacuum protection.

top

(a) A facility's vapor collection system must have the capacity for collecting cargo vapor at a rate of not less than 1.25 times the facility's maximum liquid transfer rate for cargo for which vapor collection is required plus any inerting, diluting, or enriching gas which may be added to the system, unless the vapor growth for turbulent loading of the most volatile liquid handled by the facility is less than 25 percent.

(b) A facility vapor collection system must maintain the pressure in a vessel's cargo tanks between 80 percent of the highest setting of any of the vessel's vacuum relief valves and 80 percent of the lowest setting of any of the vessel's pressure relief valves for a non-inerted tank vessel, and between 0.2 psig and 80 percent of the lowest setting of any of the vessel's pressure relief valves for an inerted tank vessel. The system must be capable of maintaining the pressure in the vessel's cargo tanks within this range at any cargo transfer rate less than or equal to the maximum transfer rate determined at the pre-transfer conference required by §156.120(w) of this chapter.

(c) The pressure measured at the facility vapor connection must be corrected for pressure drops across the vessel's vapor collection system and the vapor collection hose or arm.

(d) A pressure sensing device must be provided which activates an alarm when the pressure at the facility vapor connection exceeds either the pressure corresponding to the upper pressure determined in paragraph (b) of this section or a lower pressure agreed upon at the pre-transfer conference required by §156.120(w) of this chapter.

(e) A pressure sensing device must be provided which activates an alarm when the pressure at the facility vapor connection falls below either the pressure corresponding to the lower pressure determined in paragraph (b) of this section or a higher pressure agreed upon at the pre-transfer conference required by §156.120(w) of this chapter.

(f) A pressure sensing device must be provided which activates the emergency shutdown system required by §154.550 of this part and closes the remotely operated cargo vapor shutoff valve required by §154.810(a) of this subpart when the pressure at the facility vapor connection exceeds 2.0 psi, or a lower pressure agreed upon at the pre-transfer conference required by §156.120(w) of this chapter. The sensing device must be independent of the device used to activate the alarm required by paragraph (d) of this section.

(g) A pressure sensing device must be provided which closes the remotely operated cargo vapor shutoff valve required by §154.810(a) of this subpart when the vacuum at the facility vapor connection is more than 1.0 psi, or a lesser vacuum set at the pre-transfer conference required by §156.120(w) of this chapter. The sensing device must be independent of the device used to activate the alarm required by paragraph (e) of this section.

(h) The pressure sensing devices required by paragraphs (d) and (f) of this section must be located in the vapor collection line between the facility vapor connection and the manual isolation valve, if required by §154.810(h) of this subpart, unless an interlock is provided which prevents operation of the system when the isolation valve is closed.

(i) A pressure indicating device must be provided which indicates the pressure in the vapor collection line.

(j) If a compressor, blower, or eductor capable of drawing more than 1.0 psi vacuum is used to draw vapor from the vessel, a vacuum relief valve must be installed in the vapor collection line between the compressor, blower, or eductor and the facility vapor connection, which:

(1) Relieves at a pressure such that the pressure in the vapor collection system at the facility vapor connection does not exceed 1.0 psi vacuum;

(2) Has a relieving capacity equal to or greater than the capacity of the compressor, blower, or eductor;

(3) Has a flame screen fitted at the vacuum relief opening; and

(4) Has been tested for relieving capacity in accordance with paragraph 1.5.1.3 of API 2000 (incorporated by reference; *see* §154.106) with a flame screen fitted.

(k) When a facility collects cargo vapor through an undersea pipeline from a vessel moored offshore, the vacuum relief valve may be set at a vacuum greater than 1.0 psi vacuum provided the pressure controls take into account the pressure drop across the vessel's vapor collection system, any vapor collection hoses, and the undersea pipeline as a function of the actual transfer rate.

(l) If the pressure in the vapor collection system can exceed 2.0 psig due to a malfunction in an inerting, enriching, or diluting system a pressure relief valve must:

(1) Be installed between the point where inerting, enriching, or diluting gas is introduced into the vapor collection system and the facility vapor connection;

(2) Relieve at a pressure such that the pressure in the vapor collection system at the facility vapor connection does not exceed 2.0 psig;

(3) Have a relieving capacity equal to or greater than the maximum capacity of the facility inerting, enriching, or diluting gas source;

(4) If not designed to insure a minimum vapor discharge velocity of 30 meters (98.4 ft.) per second, have a flame screen fitted at the discharge opening; and

(5) Have been tested for relieving capacity in accordance with paragraph 1.5.1.3 of API 2000.

(m) The relieving capacity test required by paragraph (l)(5) must be carried out with a flame screen fitted at the discharge opening if the pressure relief valve is not designed to insure a minimum vapor discharge velocity of 30 meters (98.4 ft.) per second.

[CGD 88–102, 55 FR 25429, June 21, 1990, as amended by USCG–1998–3799, 63 FR 35531, June 30, 1998; USCG–2001–8661, 74 FR 45023, Aug. 31, 2009]

§ 154.820 Fire, explosion, and detonation protection.

top

(a) A vapor control system with a single facility vapor connection that receives vapor only from a vessel with inerted cargo tanks and processes vapor with a vapor recovery unit must:

(1) Be capable of inerting the vapor collection line in accordance with §154.824(a) of this subpart prior to receiving vapors from the vessel;

(2) Have at least one oxygen analyzer that samples the vapor concentration continuously at a point not more than 6 meters (19.7 ft.) from the facility vapor connection; and

(3) Meet §154.824 (f)(1), (f)(2), (g), (h)(2), and (h)(3) of this subpart.

(b) A vapor control system with a single facility vapor connection that receives vapor only from a vessel with inerted cargo tanks and processes vapor with a vapor destruction unit must:

(1) Have a detonation arrester located not more than 6 meters (19.7 ft.) from the facility vapor connection; or

(2) Have an inerting system that meets the requirements of §154.824 of this subpart.

(c) A vapor control system with a single facility vapor connection that receives vapor from a vessel with cargo tanks that are not inerted and processes vapor with a vapor recovery unit must:

(1) Have a detonation arrester located not more than 6 meters (19.7 ft.) from the facility vapor connection; or

(2) Have an inerting, enriching, or diluting system that meets the requirements of §154.824 of this subpart.

(d) A vapor control system with a single facility vapor connection that receives vapor from a vessel with cargo tanks that are not inerted and processes the vapor with a vapor destruction unit must:

(1) Have a detonation arrester located not more than 6 meters (19.7 ft.) from the facility vapor connection; and

(2) Have an inerting, enriching, or diluting system that meets the requirements of §154.824 of this subpart.

(e) A vapor control system with multiple facility vapor connections that processes vapor with a vapor recovery unit must have a detonation arrester located not more than 6 meters (19.7 ft.) from each facility vapor connection.

(f) A vapor control system with multiple facility vapor connections that processes vapor with a vapor destruction unit must:

(1) Have a detonation arrester located not more than 6 meters (19.7 ft.) from each facility vapor connection; and

(2) Have an inerting, enriching, or diluting system that meets the requirements of §154.824 of this subpart.

(g) A vapor control system that uses a vapor balancing system in which cargo vapor from a vessel is transferred through the facility vapor collection system to facility storage tanks must:

(1) Have a detonation arrester located not more than 6 meters (19.7 ft.) from each facility vapor connection;

(2) Have a detonation arrester located within the storage tank containment area as close as practical to the vapor return connection of each facility storage tank; and

(3) Have facility storage tank high level alarm systems and facility storage tank overfill control systems arranged to prevent cargo from entering the vapor return line.

(h) Except for a discharge vent from a vapor destruction unit, each outlet of a vapor control system that vents to atmosphere and is not isolated with a pressure-vacuum relief valve must have a flame arrester located at the outlet.

§ 154.822 Detonation arresters, flame arresters, and flame screens.

top

(a) Each detonation arrester required by this part must:

(1) Be capable of arresting a detonation from either side of the device; and

(2) Be acceptable to the Commandant (CG–522). A detonation arrester designed, built, and tested in accordance with appendix A of this part will be acceptable to the Commandant (G-MSO).

(b) Each flame arrester required by this part must be acceptable to the Commandant (CG–522). A flame arrester designed, built, and tested in accordance with appendix B of this part will be acceptable to the Commandant (G-MSO).

(c) Each flame screen required by this part must be either a single screen of corrosion resistant wire of at least 30 by 30 mesh, or two screens, both of corrosion resistant wire, of at least 20 by 20 mesh, spaced not less than 12.7 millimeters (1/2in.) or more than 38.1 millimeters (11/2in.) apart.

[CGD 88–102, 55 FR 25429, June 21, 1990; 55 FR 39270, Sept. 26, 1990, as amended by CGD 96–026, 61 FR 33666, June 28, 1996; USCG–2002–12471, 67 FR 41333, June 18, 2002; USCG–2010–0351, 75 FR 36284, June 25, 2010]

§ 154.824 Inerting, enriching, and diluting systems.

top

(a) A vapor control system which uses inerting, enriching, or diluting gas must be capable of inerting, enriching, or diluting the vapor collection line prior to receiving cargo vapor.

(b) Except as permitted by §154.820(a) of this subpart, a vapor control system which uses an inerting, enriching, or diluting system must be equipped with a gas injection and mixing arrangement located as close as practical but not more than 10 meters (32.8 ft.) from the facility vapor connection that ensures complete mixing of the gases within 20 pipe diameters of the injection point;

(c) A vapor control system that uses an inerting or enriching system may not be operated at a vacuum after the injection point unless:

(1) There are no sleeve-type pipe couplings, vacuum relief valves, or other devices which could allow air into the vapor collection system downstream of the injection point; or

(2) An additional analyzer is used to monitor the downstream vapor concentration and a means is provided to inject additional inerting or enriching gas.

(d) A vapor control system that uses analyzers to control the amount of inerting, enriching, or diluting gas injected into the vapor collection line must be equipped with at least 2 analyzers. The analyzers must be connected so that:

(1) When oxygen analyzers are used, the higher oxygen concentration reading controls the inerting or enriching system and activates the alarm and automatic shutdown system required by paragraph (h), (j) or (k)(2) of this section;

(2) When hydrocarbon analyzers are used, the lower hydrocarbon concentration reading controls the enriching system and activates the alarm and automatic shutdown system required by paragraph (i) or (k)(1) of this section; and

(3) When hydrocarbon analyzers are used, the higher hydrocarbon concentration reading controls the diluting system and activates the alarm and automatic shutdown system required by paragraph (l) of this section.

(e) A vapor control system that uses volumetric measurements to control the amount of inerting, enriching, or diluting gas injected into the vapor collection line must be equipped with at least one analyzer to activate the alarms and automatic shutdown systems required by this section.

(f) Each oxygen or hydrocarbon analyzer required by this section must:

(1) Be installed in accordance with API Recommended Practice 550 (incorporated by reference; *see* §154.106);

(2) Have a response time of not more than 30 seconds from the time the vapor is sampled; and

(3) Sample the vapor concentration continuously not more than 30 pipe diameters from the gas injection point.

(g) Oxygen analyzers which operate at elevated temperatures (*i.e.* , zirconia oxide or thermomagnetic) must not be used.

(h) An inerting system must:

(1) Supply sufficient inert gas to the vapor stream to ensure that the oxygen concentration throughout the vapor collection system is maintained below 8.0 percent by volume;

(2) Activate an alarm when the oxygen concentration in the vapor collection line exceeds 8.0 percent by volume;

(3) Close the remotely operated cargo vapor shutoff valve required by §154.810(a) of this part when the oxygen concentration in the vapor collection line exceeds 9.0 percent by volume; and

(4) If a combustion device is used to produce the inert gas, have a hydraulic seal and non-return valve between the combustion device and the vapor collection line.

(i) An enriching system must:

(1) Supply sufficient compatible hydrocarbon vapor to the vapor stream to ensure that the hydrocarbon concentration throughout the vapor collection system is maintained above 170 percent by volume of the upper flammable limit;

(2) Activate an alarm when the hydrocarbon concentration in the vapor collection line falls below 170 percent by volume of the upper flammable limit; and

(3) Close the remotely operated cargo vapor shutoff valve required by §154.810(a) of this subpart when the hydrocarbon concentration in the vapor collection line falls below 150 percent by volume of the upper flammable limit.

(j) Oxygen analyzers may be used in lieu of hydrocarbon analyzers in an enriching system at a facility that receives cargo vapor only from a vessel with non-inerted cargo tanks, provided that the analyzers:

(1) Activate an alarm when the oxygen concentration in the vapor collection line exceeds 15.5 percent by volume; and

(2) Close the remotely operated cargo vapor shutoff valve required by §154.810(a) of this subpart when the oxygen concentration in the vapor collection line exceeds 16.5 percent by volume.

(k) An enriching system may be used in a vapor collection system that receives cargo vapor from a vessel with inerted cargo tanks if:

(1) Hydrocarbon analyzers are used to comply with paragraph (i)(2) and (i)(3) of this section; or

(2) If oxygen analyzers are used, the analyzers activate an alarm when the oxygen concentration in the vapor collection line exceeds 8 percent by volume, and close the remotely operated cargo vapor shutoff valve required by §154.810(a) of this subpart when the oxygen concentration exceeds 9 percent by volume.

(l) An air dilution system must:

(1) Supply sufficient additional air to the vapor stream to ensure that the hydrocarbon concentration throughout the vapor collection system is maintained below 30 percent by volume of the lower flammable limit;

(2) Activate an alarm when the hydrocarbon concentration in the vapor collection line exceeds 30 percent by volume of the lower flammable limit; and

(3) Close the remotely operated cargo vapor shutoff valve required by §154.810(a) of this subpart when the hydrocarbon concentration in the vapor collection line exceeds 50 percent by volume of the lower flammable limit.

[CGD 88–102, 55 FR 25429, June 21, 1990; 55 FR 39270, Sept. 26, 1990, as amended by USCG–2001–8661, 74 FR 45023, Aug. 31, 2009]

§ 154.826 Vapor compressors and blowers.

top

(a) Each inlet and outlet to a compressor or blower which handles vapor that has not been inerted, enriched, or diluted in accordance with §154.824 of this subpart must be fitted with:

(1) A detonation arrester;

(2) A flame arrester; or

(3) An explosion suppression system acceptable to the Commandant (CG–522).

(b) If a reciprocating or screw-type compressor handles vapor in the vapor collection system, it must be provided with indicators and audible and visible alarms to warn against the following conditions:

(1) Excessive discharge gas temperature at each compressor chamber or cylinder;

(2) Excessive cooling water temperature;

(3) Excessive vibration;

(4) Low lube oil level;

(5) Low lube oil pressure; and

(6) Excessive shaft bearing temperatures.

(c) If a liquid ring-type compressor handles vapor in the vapor collection system, it must be provided with indicators and audible and visible alarms to warn against the following conditions:

(1) Low level of liquid sealing medium;

(2) Lack of flow of liquid sealing medium;

(3) Excessive temperature of the liquid sealing medium;

(4) Low lube oil level;

(5) Low lube oil pressure, if pressurized lubricating system; and

(6) Excessive shaft bearing temperature.

(d) If a centrifugal compressor, fan, or lobe blower handles vapor in the vapor collection system, construction of the blades and/or housing must meet one of the following:

(1) Blades or housing of nonmetallic construction;

(2) Blades and housing of nonferrous material;

(3) Blades and housing of corrosion resistant steel;

(4) Ferrous blades and housing with one-half inch or more design tip clearance; or

(5) Blades of aluminum or magnesium alloy and a ferrous housing with a nonferrous insert sleeve at the periphery of the impeller.

[CGD 88–102, 55 FR 25429, June 21, 1990, as amended by CGD 96–026, 61 FR 33666, June 28, 1996; USCG–2010–0351, 75 FR 36284, June 25, 2010]

§ 154.828 Vapor recovery and vapor destruction units.

top

(a) The inlet to a vapor recovery unit which receives cargo vapor that has not been inerted, enriched, or diluted in accordance with §154.824 of this subpart must be fitted with one of the following:

(1) A detonation arrester;

(2) A flame arrester; or

(3) An explosion suppression system acceptable to the Commandant (CG–522).

(b) The inlet to a vapor destruction unit must:

(1) Have a liquid seal; and

(2) Have two quick-closing stop valves installed in the vapor line.

(c) A vapor destruction unit must:

(1) Not be within 30 meters (98.8 ft.) of any tank vessel berth or mooring at the facility;

(2) Have a flame arrester or detonation arrester fitted in the vapor line; and

(3) Alarm and shut down when a flame is detected on the flame arrester or detonation arrester.

(d) When a vapor destruction unit shuts down or has a flame-out condition the vapor destruction unit control system must:

(1) Close the quick-closing stop valves required by paragraph (b)(2) of this section; and

(2) Close the remotely operated cargo vapor shutoff valve required by §154.810(a) of this subpart.

[CGD 88–102, 55 FR 25429, June 21, 1990, as amended by CGD 96–026, 61 FR 33666, June 28, 1996; USCG–2010–0351, 75 FR 36284, June 25, 2010]

§ 154.840 Personnel training.

top

(a) A person in charge of a transfer operation utilizing a vapor control system must have completed a training program covering the particular system installed at the facility. Training must include drills or demonstrations using the installed vapor control system covering normal operations and emergency procedures.

(b) The training program required by paragraph (a) of this section must cover the following subjects:

(1) Purpose of a vapor control system;

(2) Principles of the vapor control system;

(3) Components of the vapor control system;

(4) Hazards associated with the vapor control system;

(5) Coast Guard regulations in this subpart;

(6) Operating procedures, including:

(i) Testing and inspection requirements,

(ii) Pre-transfer procedures,

(iii) Connection sequence,

(iv) Start-up procedures, and

(v) Normal operations; and

(7) Emergency procedures.

§ 154.850 Operational requirements.

top

(a) A facility must receive vapors only from a vessel which has its certificate of inspection or certificate of

compliance endorsed in accordance with 46 CFR 39.10–13(e).

(b) The following must be performed not more than 24 hours prior to each transfer operation:

(1) All alarms and automatic shutdown systems required by this part must be tested; and

(2) The analyzers required by §154.820(a), §154.824 (d) and (e) of this subpart must be checked for calibration by use of a span gas.

(c) The position of all valves in the vapor line between the vessel's tanks and the facility vapor collection system must be verified prior to the start of the transfer operation.

(d) A tank barge overfill control system that meets the requirements of 46 CFR 39.20–9(b) must not be connected to an overfill sensor circuit that exceeds the system's rated cable length, inductance, and capacitance.

(e) When vapor is being received from a vessel with inerted cargo tanks, the remotely operated cargo vapor shutoff valve required by §154.810(a) of this subpart must not be opened until the pressure at the facility vapor connection exceeds the pressure on the downstream side of the remotely operated cargo vapor shutoff valve.

(f) The initial cargo transfer rate must not exceed the rate agreed upon at the pre-transfer conference required by §156.120(w) of this chapter and 46 CFR 39.30–1(h).

(g) The cargo transfer rate must not exceed the maximum allowable transfer rate as determined by the lesser of the following:

(1) A transfer rate corresponding to the maximum vapor processing rate for the vapor control system, as specified in the facility operations manual required by §154.300 of this chapter; or

(2) The vessel's maximum transfer rate determined in accordance with 46 CFR 39.30–1(d).

(h) While transferring cargo to a vessel connected to a vapor control system, compressed air or gas may be used to clear cargo hoses and loading arms, but must not be used to clear cargo lines.

(i) If one of the two analyzers required by §154.824(d) of this subpart becomes inoperable during a transfer operation, the operation may continue provided the remaining analyzer remains operational; however, no further transfer operations may be started until the inoperable analyzer is replaced or repaired.

(j) Whenever a condition results in a shutdown of the vapor control system, the person in charge shall immediately terminate cargo loading.

(k) If it is suspected that a flare in the vapor control system has had a flare-back, or if a flame is detected on the flame arrester required by §154.828(c)(2) of this subpart, the transfer operation must be stopped and not be restarted until the flame arrester has been inspected and found to be in satisfactory condition.

Subpart F—Response Plans for Oil Facilities

top

Source: CGD 91–036, 61 FR 7917, Feb. 29, 1996, unless otherwise noted.

§ 154.1010 Purpose.

top

This subpart establishes oil spill response plan requirements for all marine transportation-related (MTR) facilities (hereafter also referred to as facilities) that could reasonably be expected to cause substantial harm or significant and substantial harm to the environment by discharing oil into or on the navigable waters, adjoining shorelines, or exclusive economic zone. The development of a response plan prepares the facility owner or operator to respond to an oil spill. These requirements specify criteria to be used during the planning process to determine the appropriate response resources. The specific criteria for response resources and their arrival times are not performance standards. The criteria are based on a

set of assumptions that may not exist during an actual oil spill incident.

§ 154.1015 Applicability.

top

(a) This subpart applies to all MTR facilities that because of their location could reasonably be expected to cause at least substantial harm to the environment by discharging oil into or on the navigable waters, adjoining shorelines, or exclusive economic zone.

(b) The following MTR facilities that handle, store, or transport oil, in bulk, could reasonably be expected to cause substantial harm to the environment by discharging oil into or on the navigable waters or adjoining shorelines and are classified as substantial harm MTR facilities:

(1) Fixed MTR onshore facilities capable of transferring oil to or from a vessel with a capacity of 250 barrels or more and deepwater ports;

(2) Mobile MTR facilities used or intended to be used to transfer oil to or from a vessel with a capacity of 250 barrels or more; and

(3) Those MTR facilities specifically designated as substantial harm facilities by the COTP under §154.1016.

(c) The following MTR facilities that handle, store, or transport oil in bulk could not only reasonably be expected to cause substantial harm, but also significant and substantial harm, to the environment by discharging oil into or on the navigable waters, adjoining shorelines, or exclusive economic zone and are classified as significant and substantial harm MTR facilities:

(1) Deepwater ports, and fixed MTR onshore facilities capable of transferring oil to or from a vessel with a capacity of 250 barrels or more except for facilities that are part of a non-transportation-related fixed onshore facility with a storage capacity of less than 42,000 gallons; and

(2) Those MTR facilities specifically designated as significant and substantial harm facilities by the COTP under §154.1016.

(d) An MTR facility owner or operator who believes the facility is improperly classified may request review and reclassification in accordance with §154.1075.

§ 154.1016 Facility classification by COTP.

top

(a) The COTP may upgrade the classification of:

(1) An MTR facility not specified in §154.1015 (b) or (c) to a facility that could reasonably be expected to cause substantial harm to the environment; or

(2) An MTR facility specified in §154.1015(b) to a facility that could reasonably be expected to cause significant and substantial harm to the environment.

(b) The COTP may downgrade, the classification of:

(1) An MTR facility specified in §154.1015(c) to a facility that could reasonably be expected to cause substantial harm to the environment; or

(2) An MTR facility specified in §154.1015(b) to a facility that could not reasonably be expected to cause substantial, or significant and substantial harm to the environment.

(3) The COTP will consider downgrading an MTR facility's classification only upon receiving a written request for a downgrade of classification from the facility's owner or operator.

(c) When changing a facility classification the COTP may, as appropriate, consider all relevant factors including, but not limited to: Type and quantity of oils handled in bulk; facility spill history; age of facility; proximity to public and commercial water supply intakes; proximity to navigable waters based on the definition of navigable waters in 33 CFR 2.36; and proximity to fish and wildlife and sensitive

environments.

[CGD 91–036, 61 FR 7917, Feb. 29, 1996, as amended by USCG–2008–0179, 73 FR 35014, June 19, 2008]

§ 154.1017 Response plan submission requirements.

top

(a) The owner or operator of an MTR facility identified only in §154.1015(b), or designated by the COTP as a substantial harm facility, shall prepare and submit to the cognizant COTP a response plan that meets the requirements of §§154.1030, 154.1040, 154.1045, or §154.1047, as appropriate. This applies to:

(1) A mobile MTR facility used or intended to be used to transfer oil to or from a vessel with a capacity of 250 barrels or more; and

(2) A fixed MTR facility specifically designated as a substantial harm facility by the COTP under §154.1016.

(b) The owner or operator of an MTR facility identified in §154.1015(c) or designated by the COTP as a significant and substantial harm facility shall prepare and submit for review and approval of the cognizant COTP a response plan that meets the requirements of §§154.1030, 154.1035, 154.1045, or 154.1047, as appropriate. This applies to:

(1) A fixed MTR facility capable of transferring oil, in bulk, to or from a vessel with a capacity of 250 barrels or more; and

(2) An MTR facility specifically designated as a significant and substantial harm facility by the COTP under §154.1016.

(c) In addition to the requirements in paragraphs (a) and (b) of this section, the response plan for a mobile MTR facility must meet the requirements of §154.1041 subpart F.

§ 154.1020 Definitions.

top

Except as otherwise defined in this section, the definition in 33 CFR 154.105 apply to this subpart and subparts H and I.

Adverse weather means the weather conditions that will be considered when identifying response systems and equipment in a response plan for the applicable operating environment. Factors to consider include, but are not limited to, significant wave height as specified in §§154.1045, 154.1047, 154.1225, or 154.1325, as appropriate; ice conditions, temperatures, weather-related visibility, and currents within the COTP zone in which the systems or equipment are intended to function.

Animal fat means a non-petroleum oil, fat, or grease derived from animals, and not specifically identified elsewhere in this part.

Average most probable discharge means a discharge of the lesser of 50 barrels or 1 percent of the volume of the worst case discharge.

Captain of the Port (COTP) Zone means a zone specified in 33 CFR part 3 and, where applicable, the seaward extension of that zone to the outer boundary of the exclusive economic zone (EEZ).

Complex means a facility possessing a combination of marine-transportation related and non-transportation-related components that is subject to the jurisdiction of more than one Federal agency under section 311(j) of the Clean Water Act.

Dispersant-application platform means the vessel or aircraft outfitted with the dispersant-application equipment acting as the delivery system for the dispersant onto the oil spill.

Dispersant Mission Planner 2 or (DMP2) means an Internet-downloadable application that estimates EDAC for different dispersant response systems. The NSFCC will use DPMP2 for evaluating OSRO

dispersant classification levels.

Effective Daily Application Capacity or *EDAC* means the estimated amount of dispersant that can be applied to a discharge by an application system given the availability of supporting dispersant stockpiles, when operated in accordance with approved standards and within acceptable environmental conditions.

Exclusive economic zone (EEZ) means the zone contiguous to the territorial sea of the United States extending to a distance up to 200 nautical miles from the baseline from which the breadth of the territorial sea is measured.

Facility that could reasonably be expected to cause significant and substantial harm means any MTR facility (including piping and any structures that are used for the transfer of oil between a vessel and a facility) classified as a “significant and substantial harm” facility under §154.1015(c) and §154.1216.

Facility that could reasonably be expected to cause substantial harm means any MTR facility classified as a “substantial harm” facility under §154.1015(b) and §154.1216.

Fish and Wildlife and Sensitive Environment means areas that may be identified by either their legal designation or by Area Committees in the applicable Area Contingency Plan (ACP) (for planning) or by members of the Federal On-Scene Coordinator's spill response structure (during responses). These areas may include: Wetlands, national and state parks, critical habitats for endangered or threatened species, wilderness and natural resource areas, marine sanctuaries and estuarine reserves, conservation areas, preserves, wildlife areas, wildlife refuges, wild and scenic rivers, areas of economic importance, recreational areas, national forests, Federal and state lands that are research areas, heritage program areas, land trust areas, and historical and archaeological sites and parks. These areas may also include unique habitats such as: aquaculture sites and agricultural surface water intakes, bird nesting areas, critical biological resource areas, designated migratory routes, and designated seasonal habitats.

Great Lakes means Lakes Superior, Michigan, Huron, Erie, and Ontario, their connecting and tributary waters, the Saint Lawrence River as far as Saint Regis, and adjacent port areas.

Gulf Coast means, for the purposes of dispersant-application requirements, the region encompassing the following Captain of the Port Zones:

(1) Corpus Christi, TX.

(2) Houston/Galveston, TX.

(3) Port Arthur, TX.

(4) Morgan City, LA.

(5) New Orleans, LA.

(6) Mobile, AL.

(7) St. Petersburg, FL.

Higher volume port area means the following ports:

(1) Boston, MA.

(2) New York, NY.

(3) Delaware Bay and River to Philadelphia, PA.

(4) St. Croix, VI.

(5) Pascagoula, MS.

(6) Mississippi River from Southwest Pass, LA. to Baton Rouge, LA.

(7) Louisiana Offshore Oil Port (LOOP), LA.

(8) Lake Charles, LA.

(9) Sabine-Neches River, TX.

(10) Galveston Bay and Houston Ship Channel, TX.

(11) Corpus Christi, TX.

(12) Los Angeles/Long Beach harbor, CA.

(13) San Francisco Bay, San Pablo Bay, Carquinez Strait, and Suisun Bay to Antioch, CA.

(14) Straits of Juan De Fuca from Port Angeles, WA, to and including Puget Sound, WA.

(15) Prince William Sound, AK.

Inland area means the area shoreward of the boundary lines defined in 46 CFR part 7, except in the Gulf of Mexico. In the Gulf of Mexico, it means the area shoreward of the lines of demarcation (COLREG lines) defined in §§80.740 through 80.850 of this chapter. The inland area does not include the Great Lakes.

Marine transportation-related facility (MTR facility) means any onshore facility or segment of a complex regulated under section 311(j) of the Federal Water Pollution Control Act (FWPCA) by two or more Federal agencies, including piping and any structure used or intended to be used to transfer oil to or from a vessel, subject to regulation under this part and any deepwater port subject to regulation under part 150 of this chapter. For a facility or segment of a complex regulated by two or more Federal agencies under section 311(j) of the FWPCA, the MTR portion of the complex extends from the facility oil transfer system's connection with the vessel to the first valve inside the secondary containment surrounding tanks in the non-transportation-related portion of the facility or, in the absence of secondary containment, to the valve or manifold adjacent to the tanks comprising the non-transportation-related portion of the facility, unless another location has otherwise been agreed to by the COTP and the appropriate Federal official.

Maximum extent practicable means the planned capability to respond to a worst case discharge in adverse weather, as contained in a response plan that meets the criteria in this subpart or in a specific plan approved by the cognizant COTP.

Maximum most probable discharge means a discharge of the lesser of 1,200 barrels or 10 percent of the volume of a worst case discharge.

Nearshore area means the area extending seaward 12 miles from the boundary lines defined in 46 CFR part 7, except in the Gulf of Mexico. In the Gulf of Mexico, it means the area extending seaward 12 miles from the line of demarcation (COLREG lines) defined in §§80.740–80.850 of this chapter.

Non-persistent or Group I oil means a petroleum-based oil that, at the time of shipment, consists of hydrocarbon fractions—

(1) At least 50 percent of which by volume, distill at a temperature of 340 degrees C (645 degrees F); and

(2) At least 95 percent of which by volume, distill at a temperature of 370 degrees C (700 degrees F).

Ocean means the offshore area and nearshore area as defined in this subpart.

Offshore area means the area beyond 12 nautical miles measured from the boundary lines defined in 46 CFR part 7 extending seaward to 50 nautical miles, except in the Gulf of Mexico. In the Gulf of Mexico, it is the area beyond 12 nautical miles of the line of demarcation (COLREG lines) defined in §§80.740–80.850 of this chapter extending seaward to 50 nautical miles.

Oil means oil of any kind or in any form, including, but not limited to, petroleum, fuel oil, sludge, oil refuse, oil mixed with wastes other than dredge spoil.

Oil spill removal organization (OSRO) means an entity that provides response resources.

On-Scene Coordinator (OSC) means the definition in the National Oil and Hazardous Substances Pollution Contingency Plan (40 CFR part 300).

Operating area means Rivers and Canals, Inland, Nearshore, Great Lakes, or Offshore geographic location(s) in which a facility is handling, storing, or transporting oil.

Operating environment means Rivers and Canals, Inland, Great Lakes, or Ocean. These terms are used to define the conditions in which response equipment is designed to function.

Operating in compliance with the plan means operating in compliance with the provisions of this subpart including, ensuring the availability of the response resources by contract or other approved means, and conducting the necessary training and drills.

Operational effectiveness monitoring means monitoring concerned primarily with determining whether the dispersant was properly applied and how the dispersant is affecting the oil.

Other non-petroleum oil means a non-petroleum oil of any kind that is not generally an animal fat or vegetable oil.

Persistent oil means a petroleum-based oil that does not meet the distillation criteria for a non-persistent oil. For the purposes of this subpart, persistent oils are further classified based on specific gravity as follows:

(1) Group II—specific gravity of less than .85.

(2) Group III—specific gravity equal to or greater than .85 and less than .95.

(3) Group IV—specific gravity equal to or greater than .95 and less than or equal to 1.0.

(4) Group V—specific gravity greater than 1.0.

Pre-authorization for dispersant use means an agreement, adopted by a regional response team in coordination with area committees, which authorizes the use of dispersants at the discretion of the Federal On-Scene Coordinator without the further approval of other Federal or State authorities. These pre-authorization areas are generally limited to particular geographic areas within each region.

Primary dispersant staging site means a site designated within a Captain of the Port zone that has been identified as a forward staging area for dispersant application platforms and the loading of dispersant stockpiles. Primary staging sites are typically the planned locations where platforms load or reload dispersants before departing for application at the site of the discharge and may not be the locations where dispersant stockpiles are stored or application platforms are home-based.

Qualified individual and alternate qualified individual means a person located in the United States who meets the requirements of §154.1026.

Response activities means the containment and removal of oil from the land, water, and shorelines, the temporary storage and disposal of recovered oil, or the taking of other actions as necessary to minimize or mitigate damage to the public health or welfare or the environment.

Response resources means the personnel, equipment, supplies, and other capability necessary to perform the response activities identified in a response plan.

Rivers and canals means a body of water confined within the inland area, including the Intracoastal Waterways and other waterways artificially created for navigation, that has a project depth of 12 feet or less.

Specific gravity means the ratio of the mass of a given volume of liquid at 15 °C (60 °F) to the mass of an equal volume of pure water at the same temperature.

Spill management team means the personnel identified to staff the organizational structure identified in a response plan to manage response plan implementation.

Substantial threat of a discharge means any incident or condition involving a facility that may create a risk of discharge of oil. Such incidents include, but are not limited to storage tank or piping failures, above ground or underground leaks, fires, explosions, flooding, spills contained within the facility, or other similar occurrences.

Tier means the combination of required response resources and the times within which the resources must arrive on scene.

[Note: Tiers are applied in three categories:

(1) Higher Volume Port Areas,

(2) Great Lakes, and

(3) All other operating environments, including rivers and canals, inland, nearshore, and offshore areas.

Appendix C, Table 4 of this part, provides specific guidance on calculating response resources. Sections 154.1045(f) and 154.1135, set forth the required times within which the response resources must arrive on-scene.]

Vegetable oil means a non-petroleum oil or fat derived from plant seeds, nuts, kernels or fruits, and not specifically identified elsewhere in this part.

Worst case discharge means in the case of an onshore facility and deepwater port, the largest foreseeable discharge in adverse weather conditions meeting the requirements of §154.1029.

[CGD 91–036, 61 FR 7917, Feb. 29, 1996, as amended by USCG–1999–5149, 65 FR 40825, June 30, 2000; USCG–2001–8661, 74 FR 45023, Aug. 31, 2009]

§ 154.1025 Operating restrictions and interim operating authorization.

top

(a) The owner or operator of an MTR facility who submitted a response plan prior to May 29, 1996, may elect to comply with any of the provisions of this final rule by revising the appropriate section of the previously submitted plan in accordance with §154.1065. An owner or operator of an MTR facility who elects to comply with all sections of this final rule must resubmit the plan in accordance with §154.1060 of this part.

(b) No facility subject to this subpart may handle, store, or transport oil unless it is operating in full compliance with a submitted response plan. No facility categorized under §154.1015(c) as a significant and substantial harm facility may handle, store, or transport oil unless the submitted response plan has been approved by the COTP. The owner or operator of each new facility to which this subpart applies must submit a response plan meeting the requirements listed in §154.1017 not less than 60 days prior to handling, storing, or transporting oil. Where applicable, the response plan shall be submitted along with the letter of intent required under §154.110.

(c) Notwithstanding the requirements of paragraph (b) of this section, a facility categorized under §154.1015(c) as a significant and substantial harm facility may continue to handle, store, or transport oil for 2 years after the date of submission of a response plan, pending approval of that plan. To continue to handle, store, or transport oil without a plan approved by the COTP, the facility owner or operator shall certify in writing to the COTP that the owner or operator has ensured, by contract or other approved means as described in §154.1028(a), the availability of the necessary private personnel and equipment to respond, to the maximum extend practicable to a worst case discharge or substantial threat of such a discharge from the facility. Provided that the COTP is satisfied with the certification of response resources provided by the owner or operator of the facility, the COTP will provide written authorization for the facility to handle, store, or transport oil while the submitted response plan is being reviewed. Pending approval of the submitted response plan, deficiencies noted by the COTP must be corrected in accordance with §154.1070.

(d) A facility may not continue to handle, store, or transport oil if—

(1) The COTP determines that the response resources identified in the facility certification statement or reference response plan do not substantially meet the requirements of this subpart;

(2) The contracts or agreements cited in the facility's certification statement or referenced response plans are no longer valid;

(3) The facility is not operating in compliance with the submitted plan;

(4) The response plan has not been resubmitted or approved within the last 5 years; or

(5) The period of the authorization under paragraph (c) of this section has expired.

§ 154.1026 Qualified individual and alternate qualified individual.

top

(a) The response plan must identify a qualified individual and at least one alternate who meet the requirements of this section. The qualified individual or alternate must be available on a 24-hour basis and be able to arrive at the facility in a reasonable time.

(b) The qualified individual and alternate must:

(1) Be located in the United States;

(2) Speak fluent English;

(3) Be familiar with the implementation of the facility response plan; and

(4) Be trained in the responsibilities of the qualified individual under the response plan.

(c) The owner or operator shall provide each qualified individual and alternate qualified individual identified in the plan with a document designating them as a qualified individual and specifying their full authority to:

(1) Activate and engage in contracting with oil spill removal organization(s);

(2) Act as a liaison with the predesignated Federal On-Scene Coordinator (OSC); and

(3) Obligate funds required to carry out response activities.

(d) The owner or operator of a facility may designate an organization to fulfill the role of the qualified individual and the alternate qualified individual. The organization must then identify a qualified individual and at least one alternate qualified individual who meet the requirements of this section. The facility owner or operator is required to list in the response plan the organization, the person identified as the qualified individual, and the person or person(s) identified as the alternate qualified individual(s).

(e) The qualified individual is not responsible for—

(1) The adequacy of response plans prepared by the owner or operator; or

(2) Contracting or obligating funds for response resources beyond the authority contained in their designation from the owner or operator of the facility.

(f) The liability of a qualified individual is considered to be in accordance with the provisions of 33 USC 1321(c)(4).

§ 154.1028 Methods of ensuring the availability of response resources by contract or other approved means.

top

(a) When required in this subpart, the availability of response resources must be ensured by the following methods:

(1) A written contractual agreement with an oil spill removal organization. The agreement must identify and ensure the availability of specified personnel and equipment required under this subpart within stipulated response times in the specified geographic areas;

(2) Certification by the facility owner or operator that specified personnel and equipment required under this subpart are owned, operated, or under the direct control of the facility owner or operator, and are available within stipulated response times in the specified geographic areas;

(3) Active membership in a local or regional oil spill removal organization that has identified specified personnel and equipment required under this subpart that are available to respond to a discharge within stipulated response times in the specified geographic areas;

(4) A document which—

(i) Identifies the personnel, equipment, and services capable of being provided by the oil spill removal organization within stipulated response times in the specified geographic areas;

(ii) Sets out the parties' acknowledgment that the oil spill removal organization intends to commit the resources in the event of a response;

(iii) Permits the Coast Guard to verify the availability of the identified response resources through tests, inspections, and drills; and

(iv) Is referenced in the response plan; or

(5) The identification of an oil spill removal organization with specified equipment and personnel available within stipulated response times in specified geographic areas. The organization must provide written consent to being identified in the plan.

(b) The contracts and documents required in paragraph (a) of this section must be retained at the facility and must be produced for review upon request by the COTP.

§ 154.1029 Worst case discharge.

top

(a) The response plan must use the appropriate criteria in this section to develop the worst case discharge.

(b) For the MTR segment of a facility, not less than—

(1) Where applicable, the loss of the entire capacity of all in-line and break out tank(s) needed for the continuous operation of the pipelines used for the purposes of handling or transporting oil, in bulk, to or from a vessel regardless of the presence of secondary containment; plus

(2) The discharge from all piping carrying oil between the marine transfer manifold and the non-transportation-related portion of the facility. The discharge from each pipe is calculated as follows: The maximum time to discover the release from the pipe in hours, plus the maximum time to shut down flow from the pipe in hours (based on historic discharge data or the best estimate in the absence of historic discharge data for the facility) multiplied by the maximum flow rate expressed in barrels per hour (based on the maximum relief valve setting or maximum system pressure when relief valves are not provided) plus the total line drainage volume expressed in barrels for the pipe between the marine manifold and the non-transportation-related portion of the facility; and

(c) For a mobile facility it means the loss of the entire contents of the container in which the oil is stored or transported.

§ 154.1030 General response plan contents.

top

(a) The plan must be written in English.

(b) A response plan must be divided into the sections listed in this paragraph and formatted in the order specified herein unless noted otherwise. It must also have some easily found marker identifying each section listed below. The following are the sections and subsections of a facility response plan:

(1) Introduction and plan contents.

(2) Emergency response action plan:

(i) Notification procedures.

(ii) Facility's spill mitigation procedures.

(iii) Facility's response activities.

(iv) Fish and wildlife and sensitive environments.

(v) Disposal plan.

(3) Training and Exercises:

(i) Training procedures.

(ii) Exercise procedures.

(4) Plan review and update procedures.

(5) Appendices.

(i) Facility-specific information.

(ii) List of contacts.

(iii) Equipment lists and records.

(iv) Communications plan.

(v) Site-specific safety and health plan.

(vi) List of acronyms and definitions.

(vii) A geographic-specific appendix for each zone in which a mobile facility operates.

(c) The required contents for each section and subsection of the plan are contained in §§154.1035, 154.1040, and 154.1041, as appropriate.

(d) The sections and subsections of response plans submitted to the COTP must contain at a minimum all the information required in §§154.1035, 154.1040, and 154.1041, as appropriate. It may contain other appropriate sections, subsections, or information that are required by other Federal, State, and local agencies.

(e) For initial and subsequent submission, a plan that does not follow the format specified in paragraph (b) of this section must be supplemented with a detailed cross-reference section to identify the location of the applicable sections required by this subpart.

(f) The information contained in a response plan must be consistent with the National Oil and Hazardous Substances Pollution Contingency Plan (NCP) (40 CFR part 300) and the Area Contingency Plan(s) (ACP) covering the area in which the facility operates. Facility owners or operators shall ensure that their response plans are in accordance with the ACP in effect 6 months prior to initial plan submission or the annual plan review required under §154.1065(a). Facility owners or operators are not required to, but may at their option, conform to an ACP which is less than 6 months old at the time of plan submission.

§ 154.1035 Specific requirements for facilities that could reasonably be expected to cause significant and substantial harm to the environment.

top

(a) *Introduction and plan content.* This section of the plan must include facility and plan information as follows:

(1) The facility's name, street address, city, county, state, ZIP code, facility telephone number, and telefacsimile number, if so equipped. Include mailing address if different from street address.

(2) The facility's location described in a manner that could aid both a reviewer and a responder in locating the specific facility covered by the plan, such as, river mile or location from a known landmark that would appear on a map or chart.

(3) The name, address, and procedures for contacting the facility's owner or operator on a 24-hour basis.

(4) A table of contents.

(5) During the period that the submitted plan does not have to conform to the format contained in this subpart, a cross index, if appropriate.

(6) A record of change(s) to record information on plan updates.

(b) *Emergency Response Action Plan.* This section of the plan must be organized in the subsections described in this paragraph:

(1) *Notification procedures.* (i) This subsection must contain a prioritized list identifying the person(s), including name, telephone number, and their role in the plan, to be notified of a discharge or substantial threat of a discharge of oil. The telephone number need not be provided if it is listed separately in the list of contacts required in the plan. This Notification Procedures listing must include—

(A) Facility response personnel, the spill management team, oil spill removal organizations, and the qualified individual(s) and the designated alternate(s); and

(B) Federal, State, or local agencies, as required.

(ii) This subsection must include a form, such as that depicted in Figure 1, which contains information to be provided in the initial and follow-up notifications to Federal, State, and local agencies. The form shall include notification of the National Response Center as required in part 153 of this chapter. Copies of the form also must be placed at the location(s) from which notification may be made. The initial notification form must include space for the information contained in Figure 1. The form must contain a prominent statement that initial notification must not be delayed pending collection of all information.

Figure 1—Information on discharge*

[Involved Parties]

(A) Reporting party	(B) Suspected responsible party
Name	Name
Phones () –	Phones () –
Company	Company
Position	Organization Type:
Address	Private citizen
Address	Private enterprise
	Public utility
	Local government
	State government
	Federal government
City	City
State	State
Zip	Zip

*It is not necessary to wait for all information before calling NRC. National Response Center—1–800–424–8802 or direct telephone: 202–267–2675.

Were materials Discharged (Y/N)?
Calling for Responsible Party (Y/N)
Incident Description
Source and/or Cause of Incident
Date - - Time:
Cause
Incident Address/Location Nearest City
Distance from City
Storage Tank Container Type—Above ground (Y/N) Below ground (Y/N) Unknown

Facility Capacity
Tank Capacity
Latitude Degrees
Longitude Degrees
Mile Post or River Mile
Materials
Discharge Unit of Quantity Measure Discharged Material Quantity in Water
Response Action
Actions Taken to Correct or Mitigate Incident
Impact
Number of Injuries Number of Fatalities
Were there Evacuations (Y/N/U)? Number Evacuated
Was there any Damage (Y/N/U)? Damage in Dollars
Additional Information
Any information about the Incident not recorded elsewhere in the report
Caller Notifications
USCG EPA State Other

(2) *Facility's spill mitigation procedures.* (i) This subsection must describe the volume(s) and oil groups that would be involved in the—

(A) Average most probable discharge from the MTR facility;

(B) Maximum most probable discharge from the MTR facility;

(C) Worst case discharge from the MTR facility; and

(D) Where applicable, the worst case discharge from the non-transportation-related facility. This must be the same volume provided in the response plan for the non-transportation-related facility.

(ii) This subsection must contain prioritized procedures for facility personnel to mitigate or prevent any discharge or substantial threat of a discharge of oil resulting from operational activities associated with internal or external facility transfers including specific procedures to shut down affected operations. Facility personnel responsible for performing specified procedures to mitigate or prevent any discharge or potential discharge shall be identified by job title. A copy of these procedures shall be maintained at the facility operations center. These procedures must address actions to be taken by facility personnel in the event of a discharge, potential discharge, or emergency involving the following equipment and scenarios:

(A) Failure of manifold, mechanical loading arm, other transfer equipment, or hoses, as appropriate;

(B) Tank overfill;

(C) Tank failure;

(D) Piping rupture;

(E) Piping leak, both under pressure and not under pressure, if applicable;

(F) Explosion or fire; and

(G) Equipment failure (e.g. pumping system failure, relief valve failure, or other general equipment relevant to operational activities associated with internal or external facility transfers.)

(iii) This subsection must contain a listing of equipment and the responsibilities of facility personnel to mitigate an average most probable discharge.

(3) *Facility's response activities.* (i) This subsection must contain a description of the facility personnel's

responsibilities to initiate a response and supervise response resources pending the arrival of the qualified individual.

(ii) This subsection must contain a description of the responsibilities and authority of the qualified individual and alternate as required in §154.1026.

(iii) This subsection must describe the organizational structure that will be used to manage the response actions. This structure must include the following functional areas.

(A) Command and control;

(B) Public information;

(C) Safety;

(D) Liaison with government agencies;

(E) Spill Operations;

(F) Planning;

(G) Logistics support; and

(H) Finance.

(iv) This subsection of the plan must identify the oil spill removal organizations and the spill management team that will be capable of providing the following resources:

(A) Equipment and supplies to meet the requirements of §§154.1045, 154.1047, or subparts H or I of this part, as appropriate.

(B) Trained personnel necessary to continue operation of the equipment and staff the oil spill removal organization and spill management team for the first 7 days of the response.

(v) This section must include job descriptions for each spill management team member within the organizational structure described in paragraph (b)(3)(iii) of this section. These job descriptions must include the responsibilities and duties of each spill management team member in a response action.

(vi) For facilities that handle, store, or transport group II through group IV petroleum oils, and that operate in waters where dispersant use is pre-authorized, this subsection of the plan must also separately list the resource providers and specific resources, including appropriately trained dispersant-application personnel, necessary to provide the dispersant capabilities required in this subpart. All resource providers and resources must be available by contract or other approved means as described in §154.1028(a). The dispersant resources to be listed within this section must include the following:

(A) Identification of each primary dispersant staging site to be used by each dispersant-application platform to meet the requirements of this subpart.

(B) Identification of the platform type, resource-providing organization, location, and dispersant payload for each dispersant-application platform identified. Location data must identify the distance between the platform's home base and the identified primary dispersant staging site for this section.

(C) For each unit of dispersant stockpile required to support the effective daily application capacity (EDAC) of each dispersant-application platform necessary to sustain each intended response tier of operation, identify the dispersant product resource provider, location, and volume. Location data must include the stockpile's distance to the primary staging sites where the stockpile would be loaded onto the corresponding platforms.

(D) If an oil spill removal organization has been evaluated by the Coast Guard, and its capability is equal to or exceeds the response capability needed by the owner or operator, the section may identify only the oil spill removal organization, and not the information required in paragraphs (b)(3)(vi)(A) through (b)(3)(vi)(C) of this section.

(vii) This subsection of the plan must also separately list the resource providers and specific resources necessary to provide aerial oil tracking capabilities required in this subpart. The oil tracking resources to be listed within this section must include the following:

(A) The identification of a resource provider; and

(B) Type and location of aerial surveillance aircraft that are ensured available, through contract or other approved means, to meet the oil tracking requirements of §154.1045(j).

(viii) For mobile facilities that operate in more than one COTP zone, the plan must identify the oil spill removal organization and the spill management team in the applicable geographic-specific appendix. The oil spill removal organization(s) and the spill management team discussed in paragraph (b)(3)(iv) of this section must be included for each COTP zone in which the facility will handle, store, or transport oil in bulk.

(ix) For mobile facilities that operate in more than one COTP zone, the plan must identify the oil spill removal organization and the spill management team in the applicable geographic-specific appendix. The oil spill removal organization(s) and the spill management team discussed in paragraph (b)(3)(iv)(A) of this section must be included for each COTP zone in which the facility will handle, store, or transport oil in bulk.

(4) *Fish and wildlife and sensitive environments.* (i) This section of the plan must identify areas of economic importance and environmental sensitivity, as identified in the ACP, which are potentially impacted by a worst case discharge. ACPs are required under section 311(j)(4) of the FWPCA to identify fish and wildlife and sensitive environments. The applicable ACP shall be used to designate fish and wildlife and sensitive environments in the plan. Changes to the ACP regarding fish and wildlife and sensitive environments shall be included in the annual update of the response plan, when available.

(ii) For a worst case discharge from the facility, this section of the plan must—

(A) List all fish and wildlife and sensitive environments identified in the ACP which are potentially impacted by a discharge of persistent oils, non-persistent oils, or non-petroleum oils.

(B) Describe all the response actions that the facility anticipates taking to protect these fish and wildlife and sensitive environments.

(C) Contain a map or chart showing the location of those fish and wildlife and sensitive environments which are potentially impacted. The map or chart shall also depict each response action that the facility anticipates taking to protect these areas. A legend of activities must be included on the map page.

(iii) For a worst case discharge, this section must identify appropriate equipment and required personnel, available by contract or other approved means as described in §154.1028, to protect fish and wildlife and sensitive environments which fall within the distances calculated using the methods outlined in this paragraph as follows:

(A) Identify the appropriate equipment and required personnel to protect all fish and wildlife and sensitive environments in the ACP for the distances, as calculated in paragraph (b)(4)(iii)(B) of this section, that the persistent oils, non-persistent oils, or non-petroleum oils are likely to travel in the noted geographic area(s) and number of days listed in table 2 of appendix C of this part;

(B) Calculate the distances required by paragraph (b)(4)(iii)(A) of this section by selecting one of the methods described in this paragraph;

(*1*) Distances may be calculated as follows:

(*i*) For persistent oils and non-petroleum oils discharged into non-tidal waters, the distance from the facility reached in 48 hours at maximum current.

(*ii*) For persistent and non-petroleum oils discharged into tidal waters, 15 miles from the facility down current during ebb tide and to the point of maximum tidal influence or 15 miles, whichever is less, during flood tide.

(*iii*) For non-persistent oils discharged into non-tidal waters, the distance from the facility reached in 24 hours at maximum current.

(*iv*) For non-persistent oils discharged into tidal waters, 5 miles from the facility down current during ebb tide and to the point of maximum tidal influence or 5 miles, whichever is less, during flood tide.

(*2*) A spill trajectory or model may be substituted for the distances calculated under paragraph (b)(4)(iii)(B)(*I) of this section.* The spill trajectory or model must be acceptable to the COTP.

(*3*) The procedures contained in the Environmental Protection's Agency's regulations on oil pollution

prevention for non-transportation-related onshore facilities at 40 CFR part 112, appendix C, Attachment C-III may be substituted for the distances listed in non-tidal and tidal waters; and

(C) Based on historical information or a spill trajectory or model, the COTP may require the additional fish and wildlife and sensitive environments also be protected.

(5) *Disposal Plan.* This subsection must describe any actions to be taken or procedures to be used to ensure that all recovered oil and oil contaminated debris produced as a result of any discharge are disposed according to Federal, state, or local requirements.

(c) *Training and exercises.* This section must be divided into the following two subsections:

(1) *Training procedures.* This subsection must describe the training procedures and programs of the facility owner or operator to meet the requirements in §154.1050.

(2) *Exercise procedures.* This subsection must describe the exercise program to be carried out by the facility owner or operator to meet the requirements in §154.1055.

(d) *Plan review and update procedures.* This section must address the procedures to be followed by the facility owner or operator to meet the requirements of §154.1065 and the procedures to be followed for any post-discharge review of the plan to evaluate and validate its effectiveness.

(e) *Appendices.* This section of the response plan must include the appendices described in this paragraph.

(1) *Facility-specific information.* This appendix must contain a description of the facility's principal characteristics.

(i) There must be a physical description of the facility including a plan of the facility showing the mooring areas, transfer locations, control stations, locations of safety equipment, and the location and capacities of all piping and storage tanks.

(ii) The appendix must identify the sizes, types, and number of vessels that the facility can transfer oil to or from simultaneously.

(iii) The appendix must identify the first valve(s) on facility piping separating the transportation-related portion of the facility from the non-transportation-related portion of the facility, if any. For piping leading to a manifold located on a dock serving tank vessels, this valve is the first valve inside the secondary containment required by 40 CFR part 112.

(iv) The appendix must contain information on the oil(s) and hazardous material handled, stored, or transported at the facility in bulk. A material safety data sheet meeting the requirements of 29 CFR 1910.1200, 33 CFR 154.310(a)(5) or an equivalent will meet this requirement. This information can be maintained separately providing it is readily available and the appendix identifies its location. This information must include—

(A) The generic or chemical name;

(B) A description of the appearance and odor;

(C) The physical and chemical characteristics;

(D) The hazards involved in handling the oil(s) and hazardous materials. This shall include hazards likely to be encountered if the oil(s) and hazardous materials come in contact as a result of a discharge; and

(E) A list of firefighting procedures and extinguishing agents effective with fires involving the oil(s) and hazardous materials.

(v) The appendix may contain any other information which the facility owner or operator determines to be pertinent to an oil spill response.

(2) *List of contacts.* This appendix must include information on 24-hour contact of key individuals and organizations. If more appropriate, this information may be specified in a geographic-specific appendix. The list must include—

(i) The primary and alternate qualified individual(s) for the facility;

(ii) The contact(s) identified under paragraph (b)(3)(iv) of this section for activation of the response resources; and

(iii) Appropriate Federal, State, and local officials.

(3) *Equipment list and records.* This appendix must include the information specified in this paragraph.

(i) The appendix must contain a list of equipment and facility personnel required to respond to an average most probable discharge, as defined in §154.1020. The appendix must also list the location of the equipment.

(ii) The appendix must contain a detailed listing of all the major equipment identified in the plan as belonging to an oil spill removal organization(s) that is available, by contract or other approved means as described in §154.1028(a), to respond to a maximum most probable or worst case discharge, as defined in §154.1020. The detailed listing of all major equipment may be located in a separate document referenced by the plan. Either the appendix or the separate document referenced in the plan must provide the location of the major response equipment.

(iii) It is not necessary to list response equipment from oil spill removal organization(s) when the organization has been classified by the Coast Guard and their capacity has been determined to equal or exceed the response capability needed by the facility. For oil spill removal organization(s) classified by the Coast Guard, the classification must be noted in this section of the plan. When it is necessary for the appendix to contain a listing of response equipment, it shall include all of the following items that are identified in the response plan: Skimmers; booms; dispersant application, in-situ burning, bioremediation equipment and supplies, and other equipment used to apply other chemical agents on the NCP Product Schedule (if applicable); communications, firefighting, and beach cleaning equipment; boats and motors; disposal and storage equipment; and heavy equipment. The list must include for each piece of equipment—

(A) The type, make, model, and year of manufacture listed on the nameplate of the equipment;

(B) For oil recovery devices, the effective daily recovery rate, as determined using section 6 of appendix C of this part;

(C) For containment boom, the overall boom height (draft and freeboard) and type of end connectors;

(D) The spill scenario in which the equipment will be used for or which it is contracted;

(E) The total daily capacity for storage and disposal of recovered oil;

(F) For communication equipment, the type and amount of equipment intended for use during response activities. Where applicable, the primary and secondary radio frequencies must be specified.

(G) Location of the equipment; and

(H) The date of the last inspection by the oil spill removal organization(s).

(4) *Communications plan.* This appendix must describe the primary and alternate method of communication during discharges, including communications at the facility and at remote locations within the areas covered by the response plan. The appendix may refer to additional communications packages provided by the oil spill removal organization. This may reference another existing plan or document.

(5) *Site-specific safety and health plan.* This appendix must describe the safety and health plan to be implemented for any response location(s). It must provide as much detailed information as is practicable in advance of an actual discharge. This appendix may reference another existing plan requiring under 29 CFR 1910.120.

(6) *List of acronyms and definitions.* This appendix must list all acronyms used in the response plan including any terms or acronyms used by Federal, State, or local governments and any operational terms commonly used at the facility. This appendix must include all definitions that are critical to understanding the response plan.

[CGD 91–036, 61 FR 7917, Feb. 29, 1996, as amended by USCG–2000–7223, 65 FR 40058, June 29, 2000; USCG–2001–9286, 66 FR 33641, June 25, 2001; USCG–2008–0179, 73 FR 35014, June 19, 2008; USCG–2001–8661, 74 FR 45023, Aug. 31, 2009]

§ 154.1040 Specific requirements for facilities that could reasonably be expected to

cause substantial harm to the environment.

top

(a) The owner or operator of a facility that, under §154.1015, could reasonably be expected to cause substantial harm to the environment, shall submit a response plan that meets the requirements of §154.1035, except as modified by this section.

(b) The facility's response activities section of the response plan need not list the facility or corporate organizational structure that will be used to manage the response, as required by §154.1035(b)(3)(iii).

(c) The owner or operator of a facility must ensure the availability of response resources required to be identified in §154.1035(b)(3)(iv) by contract or other approved means described in §154.1028.

(d) A facility owner or operator must have at least 200 feet of containment boom and the means of deploying and anchoring the boom available at the spill site within 1 hour of the detection of a spill to respond to the average most probable discharge in lieu of the quantity of containment boom specified in §154.1045(c)(1). Based on site-specific or facility-specific information, the COTP may specify that additional quantities of containment boom are available within one hour. In addition, there must be adequate sorbent material for initial response to an average most probable discharge. If the facility is a fixed facility, the containment boom and sorbent material must be located at the facility. If the facility is a mobile facility, the containment boom and sorbent must be available locally and be at the site of the discharge within 1 hour of its discovery.

§ 154.1041 Specific response information to be maintained on mobile MTR facilities.

top

(a) Each mobile MTR facility must carry the following information as contained in the response plan when performing transfer operations:

(1) A description of response activities for a discharge which may occur during transfer operations. This may be a narrative description or a list of procedures to be followed in the event of a discharge.

(2) Identity of response resources to respond to a discharge from the mobile MTR facility.

(3) List of the appropriate persons and agencies (including the telephone numbers) to be contacted in regard to a discharge and its handling, including the National Response Center.

(b) The owner or operator of the mobile facility must also retain the information in this paragraph at the principal place of business.

§ 154.1045 Response plan development and evaluation criteria for facilities that handle, store, or transport Group I through Group IV petroleum oils.

top

(a) The owner or operator of a facility that handles, stores, or transports Group I through Group IV petroleum oils shall use the criteria in this section to evaluate response resources identified in the response plan for the specified operating environment.

(1) The criteria in Table 1 of appendix C of this part are to be used solely for identification of appropriate equipment in a response plan. These criteria reflect conditions used for planning purposes to select mechanical response equipment and are not conditions that would limit response actions or affect normal facility operations.

(2) The response resources must be evaluated considering limitations for the COTP zones in which the facility operates, including but not limited to—

(i) Ice conditions;

(ii) Debris;

(iii) Temperature ranges;

(iv) Weather-related visibility; and

(v) Other appropriate environmental conditions as determined by the COTP.

(3) The COTP may reclassify a specific body of water or location within the COTP zone. Any reclassifications will be identified by the COTP in the applicable ACP. Reclassifications may be to—

(i) A more stringent operating environment if the prevailing wave conditions exceed the significant wave height criteria during more than 35 percent of the year; or

(ii) A less stringent operating environment if the prevailing wave conditions do not exceed the significant wave height criteria for the less stringent operating environment during more than 35 percent of the year.

(b) Response equipment must—

(1) Meet or exceed the operating criteria listed in Table 1 of appendix C of this part;

(2) Function in the applicable operating environment; and

(3) Be appropriate for the petroleum oil carried.

(c) The response plan for a facility that handles, stores, or transports Group I through Group IV petroleum oils must identify response resources that are available, by contract or other approved means as described in §154.1028(a)(1)(4), to respond to the facility's average most probable discharge. The response resources must include, at a minimum—

(1) 1,000 feet of containment boom or two times the length of the largest vessel that regularly conducts petroleum oil transfers to or from the facility, whichever is greater, and the means of deploying and anchoring the boom available at the spill site within 1 hour of the detection of a spill; and

(2) Oil recovery devices and recovered oil storage capacity capable of being at the spill site within 2 hours of the discovery of a petroleum oil discharge from a facility.

(d) The response plan for a facility that handles, stores, or transports Group I through Group IV petroleum oils must identify response resources that are available, by contract or other approved means as described in §154.1028(a)(1)(4), to respond to a discharge up to the facility's maximum most probable discharge volume.

(1) The response resources must include sufficient containment boom, oil recovery devices, and storage capacity for any recovery of up to the maximum most probable discharge planning volume, as contained in appendix C.

(2) The response resources must be appropriate for each group of petroleum oil identified in §154.1020 that is handled, stored, or transported by the facility.

(3) These response resources must be positioned such that they can arrive at the scene of a discharge within the following specified times:

(i) The equipment identified in paragraphs (c)(1) and (c)(2) of this section or in §154.1040(d) must arrive within the times specified in those paragraphs or that section, as appropriate.

(ii) In higher volume port areas and the Great Lakes, response resources must be capable of arriving on scene within 6 hours of the discovery of a petroleum oil discharge from a facility.

(iii) In all other locations, response resources must be capable of arriving on scene within 12 hours of the discovery of a petroleum oil discharge from a facility.

(4) The COTP may determine that mobilizing response resources to an area beyond the response times indicated in this paragraph invalidates the response plan. In this event, the COTP may impose additional operational restrictions (e.g., limitations on the number of transfers at a facility), or, at the COTP's discretion, the facility may operate with temporarily modified response plan development and evaluation criteria (e.g., modified response times, alternate response resources, etc.).

(e) The response plan for a facility that handles, stores, or transports Group I through Group IV petroleum oils must identify the response resources that are available, by contract or other approved means as described in §154.1028(a)(1)(4), to respond to the worst case discharge volume of petroleum oil to the maximum extent practicable.

(1) The location of these response resources must be suitable to meet the response times identified in paragraph (f) of this section for the applicable geographic area(s) of operation and response tier.

(2) The response resources must be appropriate for—

(i) The volume of the facility's worst case discharge;

(ii) Group(s) of petroleum oil as identified in §154.1020 that are handled, stored, or transported by the facility; and

(iii) The geographic area(s) in which the facility operates.

(3) The response resources must include sufficient boom, oil recovery devices, and storage capacity to recover the worst case discharge planning volumes.

(4) The guidelines in appendix C of this part must be used for calculating the quantity of response resources required to respond at each tier to the worst case discharge to the maximum extent practicable.

(5) When determining response resources necessary to meet the requirements of this section, a portion of those resources must be capable of use in close-to-shore response activities in shallow water. The following percentages of the response equipment identified for the applicable geographic area must be capable of operating in waters of 6 feet or less depth.

(i) Offshore—10 percent.

(ii) Nearshore/inland/Great Lakes/rivers and canals—20 percent.

(6) The COTP may determine that mobilizing response resources to an area beyond the response times indicated in this paragraph invalidates the response plan. In this event, the COTP may impose additional operational restrictions (e.g., limitations on the number of transfers at a facility), or, at the COTP's discretion, the facility may be permitted to operate with temporarily modified response plan development and evaluation criteria (e.g., modified response times, alternate response resources, etc.).

(f) Response equipment identified in a response plan for a facility that handles, stores, or transports Group I through Group IV petroleum oils must be capable of arriving on scene within the times specified in this paragraph for the applicable response tier in a higher volume port area, Great Lakes, and in other areas. Response times for these tiers from the time of discovery of a discharge are—

	Tier 1 (hrs.)	Tier 2 (hrs.)	Tier 3 (hrs.)
Higher volume port area (except for a TAPAA facility located in Prince William Sound, see §154.1135)	6	30	54
Great Lakes	12	36	60
All other river and canal, inland, nearshore, and offshore areas	12	36	60

(g) For the purposes of arranging for response resources for a facility that handles, stores, or transports Group I through Group IV petroleum oils, by contract or other approved means as described in §154.1028(a)(1)–(4), response equipment identified for Tier 1 plan credit must be capable of being mobilized and en route to the scene of a discharge within 2 hours of notification. The notification procedures identified in the plan must provide for notification and authorization of mobilization of identified Tier 1 response resources—

(1) Either directly or through the qualified individual; and

(2) Within 30 minutes of a discovery of a discharge or substantial threat of discharge.

(h) Response resources identified for Tier 2 and Tier 3 plan credit must be capable of arriving on scene within the time specified for the applicable tier.

(i) The owner or operator of a facility that handles, stores, or transports groups II through IV petroleum oils within the inland, nearshore, or offshore areas where pre-authorization for dispersant use exists

must identify in their response plan, and ensure the availability of, through contract or other approved means, response resources capable of conducting dispersant operations within those areas.

(1) Dispersant response resources must be capable of commencing dispersant-application operations at the site of a discharge within 7 hours of the decision by the Federal On-Scene Coordinator to use dispersants.

(2) Dispersant response resources must include all of the following:

(i) Sufficient volumes of dispersants for application as required by paragraph (i)(3) of this section. Any dispersants identified in a response plan must be of a type listed on the National Oil and Hazardous Substances Pollution Contingency Plan Product Schedule (which is contained in 40 CFR part 300, and available online from the U.S. Government Printing Office).

(ii) Dispersant-application platforms capable of delivering and applying the dispersant on a discharge in the amounts as required by paragraph (i)(3) of this section. At least 50 percent of each EDAC tier requirement must be achieved through the use of fixed-wing, aircraft-based application platforms. For dispersant-application platforms not detailed within the DMP2, adequacy of performance criteria must be documented by presentation of independent evaluation materials (e.g., field tests and reports of actual use) that record the performance of the platform.

(iii) Dispersant-application systems that are consistent in design with, and are capable of applying dispersants within, the performance criteria in ASTM F1413–07 (incorporated by reference, *see* §154.106). For dispersant-application systems not fully covered by ASTM F1413–07, such as fire monitor-type applicators, adequacy of performance criteria must be documented by presentation of independent evaluation materials (e.g., laboratory tests, field tests, and reports of actual use) that record the design of performance specifications.

(iv) Dispersant-application personnel trained in and capable of applying dispersants according to the recommended procedures contained within ASTM F1737–07 (incorporated by reference, *see* §154.106).

(3) Dispersant stockpiles, application platforms, and other supporting resources must be available in a quantity and type sufficient to treat a facility's worst-case discharge (as determined by using the criteria in appendix C, section 8) or in quantities sufficient to meet the requirements in Table 154.1045(i) of this section, whichever is the lesser amount.

Table 154.1045(i)—Tiers for Effective Daily Application Capability

	Response time for completed application (hours)	Dispersant application dispersant: oil treated in gallons (Gulf Coast)	Dispersant application dispersant: oil treated in gallons all other U.S.
Tier 1	12	8,250:165,000	4,125:82,500
Tier 2	36	23,375:467,000	23,375:467,000
Tier 3	60	23,375:467,000	23,375:467,000
Total	60	55,000:1,100,000	50,875:1,017,500

Note to Table 154.1045(i): Gulf Coast Tier 1 is higher due to greater potential spill size and frequency in that area, and it is assumed that dispersant stockpiles would be centralized in the Gulf area. Alternative application ratios may be considered based upon submission to Coast Guard Headquarters, Office of Incident Management and Preparedness (CG–533, 202–372–2234, 2100 2nd Street, SW., room 2100, Washington, DC 20593) of peer-reviewed scientific evidence of improved capability.

(j) The owner or operator of a facility handling Groups I through IV petroleum oil as a primary cargo must identify in the response plan, and ensure the availability through contract or other approved means, of response resources necessary to provide aerial oil tracking to support oil spill assessment and cleanup activities. Facilities operating exclusively on inland rivers are not required to comply with this paragraph. Aerial oil tracking resources must:

(1) Be capable of arriving at the site of a discharge in advance of the arrival of response resources identified in the plan for tiers 1, 2, and 3 Worst-Case Discharge response times, and for a distance up to 50 nautical miles from shore (excluding inland rivers);

(2) Be capable of supporting oil spill removal operations continuously for three 10-hour operational periods during the initial 72 hours of the discharge;

(3) Include appropriately located aircraft and personnel capable of meeting the response time requirement for oil tracking from paragraph (j)(1) of this section; and

(4) Include sufficient numbers of aircraft, pilots, and trained observation personnel to support oil spill removal operations, commencing upon initial assessment, and capable of coordinating on-scene cleanup operations, including dispersant and mechanical recovery operations. Observation personnel must be trained in:

(i) The protocols of oil-spill reporting and assessment, including estimation of slick size, thickness, and quantity; and

(ii) The use of assessment techniques in ASTM F1779–08 (incorporated by reference, *see* §154.106), and familiar with the use of other guides, such as NOAA's “Open Water Oil Identification Job Aid for Aerial Observation,” and NOAA's “Characteristic Coastal Habitats” guide (available on the Internet at *http://response.restoration.noaa.gov/* use the following links in the order presented: Home&bond;Emergency Response&bond;Responding to Oil Spills).

(k) A response plan for a facility that handles, stores, or transports Group I through Group IV petroleum oils must identify response resources with firefighting capability. The owner or operator of a facility that does not have adequate firefighting resources located at the facility or that can not rely on sufficient local firefighting resources must identify and ensure, by contract or other approved means as described in §154.1028(a)(1)–(4), the availability of adequate firefighting resources. The response plan must also identify an individual located at the facility to work with the fire department for petroleum oil fires. This individual shall also verify that sufficient well-trained firefighting resources are available within a reasonable time to respond to a worst case discharge. The individual may be the qualified individual as defined in §154.1020 and identified in the response plan or another appropriate individual located at the facility.

(l) The response plan for a facility that handles, stores, or transports Groups I through IV petroleum oils must identify equipment and required personnel available, by contract or other approved means as described in §154.1028(a) (1)–(4), to protect fish and wildlife and sensitive environments.

(1) Except as set out in paragraph (k)(2) of this section, the identified response resources must include the quantities of boom sufficient to protect fish and wildlife and sensitive environments as required by §154.1035(b)(4).

(2) The resources and response methods identified in a facility response plan must be consistent with the required resources and response methods to be used in fish and wildlife and sensitive environments, contained in the appropriate ACP. Facility owners or operators shall ensure that their response plans are in accordance with the ACP in effect 6 months prior to initial plan submission or the annual plan review required under §154.1065(a). Facility owners or operators are not required to, but may at their option, conform to an ACP which is less than 6 months old at the time of plan submission.

(m) The response plan for a facility that handles, stores, or transports Groups I through IV petroleum oils must identify an oil spill removal organization(s) with response resources that are available, by contract or other approved means as described in §154.1028(a) (1)–(4), to effect a shoreline cleanup operation commensurate with the quantity of emulsified petroleum oil to be planned for in shoreline cleanup operations.

(1) Except as required in paragraph (l)(2) of this section, the shoreline cleanup response resources required must be determined as described in appendix C of this part.

(2) The resources and response methods identified in a facility response plan must be consistent with the required shoreline cleanup resources and methods contained in the appropriate ACP. Facility owners or operators shall ensure that their response plans are in accordance with the ACP in effect 6 months prior to initial plan submission or the annual plan review required under §154.1065(a). Facility owners or operators are not required to, but may at their option, conform to an ACP which is less than 6 months old at the time of plan submission.

(n) Appendix C of this part describes the procedures to determine the maximum extent practicable quantity of response resources that must be identified and available, by contract or other approved means as described in §154.1028(a) (1)–(4), for the maximum most probable discharge volume, and for each worst case discharge response tier.

(1) Included in appendix C of this part is a cap that recognizes the practical and technical limits of response capabilities that an individual facility owner or operator can be expected to contract for in advance.

(2) Table 5 in appendix C of this part lists the caps that apply in February 18, 1993, and February 18, 1998. Depending on the quantity and type of petroleum oil handled by the facility and the facility's geographic area of operations, the resource capability caps in this table may be reached. The owner or operator of a facility whose estimated recovery capacity exceeds the applicable contracting caps in Table 5 shall identify sources of additional equipment equal to twice the cap listed in Tiers 1, 2, and 3 or the amount necessary to reach the calculated planning volume, whichever is lower. The identified resources must be capable of arriving on scene not later than the Tier 1, 2, and 3 response times in this section. No contract is required. While general listings of available response equipment may be used to identify additional sources, a response plan must identify the specific sources, locations, and quantities of equipment that a facility owner or operator has considered in his or her planning. When listing Coast Guard classified oil spill removal organization(s) which have sufficient removal capacity to recover the volume above the response capability cap for the specific facility, as specified in Table 5 in appendix C of this part, it is not necessary to list specific quantities of equipment.

(o) The Coast Guard will continue to evaluate the environmental benefits, cost efficiency and practicality of increasing mechanical recovery capability requirements. This continuing evaluation is part of the Coast Guard's long term commitment to achieving and maintaining an optimum mix of oil spill response capability across the full spectrum of response modes. As best available technology demonstrates a need to evaluate or change mechanical recovery capacities, a review of cap increases and other requirements contained within this subpart may be performed. Any changes in the requirements of this section will occur through a public notice and comment process. During this review, the Coast Guard will determine if established caps remain practicable and if increased caps will provide any benefit to oil spill recovery operations. The review will include, at least, an evaluation of:

(1) Best available technologies for containment and recovery;

(2) Oil spill tracking technology;

(3) High rate response techniques;

(4) Other applicable response technologies; and

(5) Increases in the availability of private response resources.

[CGD 91–036, 61 FR 7917, Feb. 29, 1996, as amended by USCG–2001–8661, 74 FR 45024, Aug. 31, 2009]

§ 154.1047 Response plan development and evaluation criteria for facilities that handle, store, or transport Group V petroleum oils.

top

(a) An owner or operator of a facility that handles, stores, or transports Group V petroleum oils must provide information in his or her response plan that identifies—

(1) Procedures and strategies for responding to a worst case discharge of Group V petroleum oils to the maximum extent practicable; and

(2) Sources of the equipment and supplies necessary to locate, recover, and mitigate such a discharge.

(b) An owner or operator of a facility that handles, stores, or transports Group V petroleum oil must ensure that any equipment identified in a response plan is capable of operating in the conditions expected in the geographic area(s) in which the facility operates using the criteria in Table 1 of appendix C of this part. When evaluating the operability of equipment, the facility owner or operator must consider limitations that are identified in the ACPs for the COTP zones in which the facility operates, including—

(1) Ice conditions;

(2) Debris;

(3) Temperature ranges; and

(4) Weather-related visibility.

(c) The owner or operator of a facility that handles, stores, or transports Group V petroleum oil must identify the response resources that are available by contract or other approved means as described in §154.1028. The equipment identified in a response plan must include—

(1) Sonar, sampling equipment, or other methods for locating the petroleum oil on the bottom or suspended in the water column;

(2) Containment boom, sorbent boom, silt curtains, or other methods for containing the petroleum oil that may remain floating on the surface or to reduce spreading on the bottom;

(3) Dredges, pumps, or other equipment necessary to recover petroleum oil from the bottom and shoreline;

(4) Equipment necessary to assess the impact of such discharges; and

(5) Other appropriate equipment necessary to respond to a discharge involving the type of petroleum oil handled, stored, or transported.

(d) Response resources identified in a response plan for a facility that handles, stores, or transports Group V petroleum oils under paragraph (c) of this section must be capable of being at the spill site within 24 hours of discovery of a discharge.

(e) A response plan for a facility that handles, stores, or transports Group V petroleum oils must identify response resources with firefighting capability. The owner or operator of a facility that does not have adequate firefighting resources located at the facility or that can not rely on sufficient local firefighting resources must identity and ensure, by contract or other approved means as described in §154.1028, the availability of adequate firefighting resources. The response plan must also identify an individual located at the facility to work with the fire department for petroleum oil fires. This individual shall also verify that sufficient well-trained firefighting resources are available within a reasonable response time to a worst case scenario. The individual may be the qualified individual as defined in §154.1020 and identified in the response plan or another appropriate individual located at the facility.

§ 154.1050 Training.

top

(a) A response plan submitted to meet the requirements of §§154.1035 or 154.1040, as appropriate, must identify the training to be provided to each individual with responsibilities under the plan. A facility owner or operator must identify the method to be used for training any volunteers or casual laborers used during a response to comply with the requirements of 29 CFR 1910.120.

(b) A facility owner or operator shall ensure the maintenance of records sufficient to document training of facility personnel; and shall make them available for inspection upon request by the U.S. Coast Guard. Records for facility personnel must be maintained at the facility for 3 years.

(c) Where applicable, a facility owner or operator shall ensure that an oil spill removal organization identified in a response plan to meet the requirements of this subpart maintains records sufficient to document training for the organization's personnel and shall make them available for inspection upon request by the facility's management personnel, the qualified individual, and U.S. Coast Guard. Records must be maintained for 3 years following completion of training.

(d) The facility owner or operator remains responsible for ensuring that all private response personnel are trained to meet the Occupational Safety and Health Administration (OSHA) standards for emergency response operations in 29 CFR 1910.120.

§ 154.1055 Exercises.

top

(a) A response plan submitted by an owner or operator of an MTR facility must include an exercise program containing both announced and unannounced exercises. The following are the minimum exercise requirements for facilities covered by this subpart:

(1) Qualified individual notification exercises (quarterly).

(2) Spill management team tabletop exercises (annually). In a 3-year period, at least one of these exercises must include a worst case discharge scenario.

(3) Equipment deployment exercises:

(i) Semiannually for facility owned and operated equipment.

(ii) Annually for oil spill removal organization equipment.

(4) Emergency procedures exercises (optional).

(5) Annually, at least one of the exercises listed in §154.1055(a)(2) through (4) must be unannounced. Unannounced means the personnel participating in the exercise must not be advised in advance, of the exact date, time and scenario of the exercise.

(6) The facility owner or operator shall design the exercise program so that all components of the response plan are exercised at least once every 3 years. All of the components do not have to be exercised at one time; they may be exercised over the 3-year period through the required exercises or through an Area exercise.

(b) A facility owner or operator shall participate in unannounced exercises, as directed by the COTP. The objectives of the unannounced exercises will be to test notifications and equipment deployment for response to the average most probable discharge. After participating in an unannounced exercise directed by a COTP, the owner or operator will not be required to participate in another COTP initiated unannounced exercise for at least 3 years from the date of the exercise.

(c) A facility owner or operator shall participate in Area exercises as directed by the applicable On-Scene Coordinator. The Area exercises will involve equipment deployment to respond to the spill scenario developed by the Exercise Design Team, of which the facility owner or operator will be a member. After participating in an Area exercise, a facility owner or operator will not be required to participate in another Area exercise for at least 6 years.

(d) The facility owner or operator shall ensure that adequate records of all required exercises are maintained at the facility for 3 years. Records shall be made available to the Coast Guard upon request.

(e) The response plan submitted to meet the requirements of this subpart must specify the planned exercise program. The plan must detail the exercise program, including the types of exercises, frequency, scope, objectives and the scheme for exercising the entire response plan every 3 years.

(f) Compliance with the National Preparedness for Response Exercise Program (PREP) Guidelines will satisfy the facility response plan exercise requirements. These guidelines are available from the TASC DEPT Warehouse, 33141Q 75th Avenue, Landover, MD 20875 (fax: 301–386–5394, stock number USCG–X0241). Compliance with an alternative program that meets the requirements of paragraph (a) of this section and has been approved under §154.1060 will also satisfy the facility response plan exercise requirements.

Note to paragraph (f): The PREP guidelines are available online at *http://dmses.dot.gov/docimages/pdf1a/198001_web.pdf.*

[CGD 91–036, 61 FR 7917, Feb. 29, 1996, as amended by USCGD–2003–15404, 68 FR 37741, June 25, 2003]

§ 154.1057 Inspection and maintenance of response resources.

top

(a) A facility owner or operator required to submit a response plan under this part must ensure that—

(1) Containment booms, skimmers, vessels, and other major equipment listed or referenced in the plan are periodically inspected and maintained in good operating condition, in accordance with manufacturer's recommendations, and best commercial practices; and

(2) All inspection and maintenance is documented and that these records are maintained for 3 years.

(b) For equipment which must be inspected and maintained under this section the Coast Guard may—

(1) Verify that the equipment inventories exist as represented;

(2) Verify the existences of records required under this section;

(3) Verify that the records of inspection and maintenance reflect the actual condition of any equipment

listed or referenced; and

(4) Inspect and require operational tests of equipment.

(c) This section does not apply to containment booms, skimmers, vessels, and other major equipment listed or referenced in the plan and ensured available from an oil spill removal organization through the written consent required under §154.1028(a)(5).

§ 154.1060 Submission and approval procedures.

top

(a) The owner or operator of a facility to which this subpart applies shall submit one copy of a facility response plan meeting the requirements of this subpart to the COTP for initial review and, if appropriate, approval.

(b) The owner or operator of a facility to which this subpart applies shall include a statement certifying that the plan meets the applicable requirements of subparts F, G, H, and I of this part, as appropriate.

(c) For an MTR facility that is located in the inland response zone where the EPA Regional Administrator is the predesignated Federal On-Scene Coordinator, the COTP may consult with the EPA Federal On-Scene Coordinator prior to any final approval.

(d) For an MTR facility identified in §154.1015(c) of this subpart that is also required to prepare a response plan under 40 CFR part 112, if the COTP determines that the plan meets all applicable requirements and the EPA Regional Administrator raises no objection to the response plan contents, the COTP will notify the facility owner or operator in writing that the plan is approved.

(e) The plan will be valid for a period of up to 5 years. The facility owner or operator must resubmit an updated plan every 5 years as follows:

(1) For facilities identified in only §154.1015(b) of this subpart, the 5-year period will commence on the date the plan is submitted to the COTP.

(2) For facilities identified in §154.1015(c) of this subpart, the 5-year period will commence on the date the COTP approves the plan.

(3) All resubmitted response plans shall be accompanied by a cover letter containing a detailed listing of all revisions to the response plan.

(f) For an MTR facility identified in §154.1015(c)(2) the COTP will notify the facility owner or operator in writing that the plan is approved.

(g) If a COTP determines that a plan does not meet the requirements of this subpart either upon initial submission or upon 5-year resubmission, the COTP will return the plan to the facility owner or operator along with an explanation of the response plan's deficiencies. The owner or operator must correct any deficiencies in accordance with §154.1070 and return the plan to the COTP within the time specified by the COTP in the letter describing the deficiencies.

(h) The facility owner or operator and the qualified individual and the alternative qualified individual shall each maintain a copy of the most current response plan submitted to the COTP. One copy must be maintained at the facility in a position where the plan is readily available to persons in charge of conducting transfer operations.

§ 154.1065 Plan review and revision procedures.

top

(a) A facility owner or operator must review his or her response plan(s) annually. This review shall incorporate any revisions to the plan, including listings of fish and wildlife and sensitive environments identified in the ACP in effect 6 months prior to plan review.

(1) For an MTR facility identified in §154.1015(c) of this subpart as a “significant and substantial harm facility,” this review must occur within 1 month of the anniversary date of COTP approval of the plan. For an MTR facility identified in §154.1015(b) of this subpart, as a “substantial harm facility” this review must occur within 1 month of the anniversary date of submission of the plan to the COTP.

(2) The facility owner or operator shall submit any revision(s) to the response plan to the COTP and all other holders of the response plan for information or approval, as appropriate.

(i) Along with the revisions, the facility owner or operator shall submit a cover letter containing a detailed listing of all revisions to the response plan.

(ii) If no revisions are required, the facility owner or operator shall indicate the completion of the annual review on the record of changes page.

(iii) The COTP will review the revision(s) submitted by the owner or operator and will give written notice to the owner or operator of any COTP objection(s) to the proposed revisions within 30 days of the date the revision(s) were submitted to the COTP. The revisions shall become effective not later than 30 days from their submission to the COTP unless the COTP indicates otherwise in writing as provided in this paragraph. If the COTP indicates that the revision(s) need to be modified before implementation, the owner or operator will modify the revision(s) within the time period set by the COTP.

(3) Any required revisions must be entered in the plan and noted on the record of changes page.

(b) The facility owner or operator shall submit revisions to a previously submitted or approved plan to the COTP and all other holders of the response plan for information or approval within 30 days, whenever there is—

(1) A change in the facility's configuration that significantly affects the information included in the response plan;

(2) A change in the type of oil (petroleum oil group) handled, stored, or transported that affects the required response resources;

(3) A change in the name(s) or capabilities of the oil spill removal organization required by §154.1045;

(4) A change in the facility's emergency response procedures;

(5) A change in the facility's operating area that includes ports or geographic area(s) not covered by the previously approved plan. A facility may not operate in an area not covered in a plan previously submitted or approved, as appropriate, unless the revised plan is approved or interim operating approval is received under §154.1025; or

(6) Any other changes that significantly affect the implementation of the plan.

(c) Except as required in paragraph (b) of this section, revisions to personnel and telephone number lists included in the response plan do not require COTP approval. The COTP and all other holders of the response plan shall be advised of these revisions and provided a copy of the revisions as they occur.

(d) The COTP may require a facility owner or operator to revise a response plan at any time as a result of a compliance inspection if the COTP determines that the response plan does not meet the requirements of this subpart or as a result of inadequacies noted in the response plan during an actual pollution incident at the facility.

(e) If required by §§154.1035(b)(3) or 154.1045, a new or existing facility owner or operator must submit the required dispersant and aerial oil tracking resource revisions to a previously submitted or approved plan, made pursuant to §§154.1035(b)(3) or 154.1045, to the COTP and all other holders of the response plan for information or approval no later than February 22, 2011.

[CGD 91–036, 61 FR 7917, Feb. 29, 1996, as amended by USCG–2001–8661, 74 FR 45025, Aug. 31, 2009]

§ 154.1070 Deficiencies.

top

(a) The cognizant COTP will notify the facility owner or operator in writing of any deficiencies noted during review of a response plan, drills observed by the Coast Guard, or inspection of equipment or records maintained in connection with this subpart.

(b) Deficiencies shall be corrected within the time period specified in the written notice provided by the COTP. The facility owner or operator who disagrees with a deficiency issued by the COTP may appeal the deficiency to the cognizant COTP within 7 days or the time specified by the COTP to correct the

deficiency, whichever is less. This time commences from the date of receipt of the COTP notice. The owner or operator may request a stay from the COTP decision pending appeal in accordance with §154.1075.

(c) If the facility owner or operator fails to correct any deficiencies or submit a written appeal, the COTP may invoke the provisions of §154.1025 prohibiting the facility from storing, handling, or transporting oil.

§ 154.1075 Appeal process.

top

(a) Any owner or operator of a facility who desires to appeal the classification that a facility could reasonably be expected to cause substantial harm or significant and substantial harm to the environment, shall submit a written request to the cognizant COTP requesting review and reclassification by the COTP. The facility owner or operator shall identify those factors to be considered by the COTP. The factors to be considered by the COTP regarding reclassification of a facility include, but are not limited to, those listed in §154.1016(b). After considering all relevant material presented by the facility owner or operator and any additional material available to the COTP, the COTP will notify the facility owner or operator of the decision on the reclassification of the facility.

(b) Any facility owner or operator directly affected by an initial determination or action of the COTP may submit a written request to the cognizant COTP requesting review and reconsideration of the COTP's decision or action. The facility owner or operator shall identify those factors to be considered by the COTP in making his or her decision on reconsideration.

(c) Within 10 days of the COTP's decision under paragraph (b) of this section, the facility owner or operator may appeal the decision of the COTP to the District Commander. This appeal shall be made in writing via the cognizant COTP to the District Commander of the district in which the office of the COTP is located.

(d) Within 30 days of the District Commander's decision, the facility owner or operator may formally appeal the decision of the District Commander. This appeal shall be submitted in writing to Commandant (CG–535) via the District Commander.

(e) When considering an appeal, the COTP, District Commander, or Commandant may stay the effect of the decision or action being appealed pending the determination of the appeal.

[CGD 91–036, 61 FR 7930, Feb. 29, 1996, as amended by CGD 96–026, 61 FR 33666, June 28, 1996; USCG–2010–0351, 75 FR 36284, June 25, 2010]

Subpart G—Additional Response Plan Requirements for a Trans-Alaska Pipeline Authorization Act (TAPAA) Facility Operating in Prince William Sound, Alaska

top

Source: CGD 91–036, 61 FR 7930, Feb. 29, 1996, unless otherwise noted.

§ 154.1110 Purpose and applicability.

top

(a) This subpart establishes oil spill response planning requirements for a facility permitted under the Tans-Alaska Pipeline Authorization Act (TAPAA), in addition to the requirements of subpart F of this part. The requirements of this subpart are intended for use in developing response plans and identifying response resources during the planning process. They are not performance standards.

(b) The information required by this subpart must be included in the Prince William Sound facility-specific appendix to the facility response plan required by subpart F of this part.

§ 154.1115 Definitions.

top

In addition to the definitions in this section, the definitions in §§154.105 and 154.1020 apply to this

subpart. As used in this subpart—

Crude oil means any liquid hydrocarbon mixture occurring naturally in the earth, whether or not treated to render it suitable for transportation, and includes crude oil from which certain distillate fractions may have been removed, and crude oil to which certain distillate fractions may have been added.

Non-crude oil means any oil other than crude oil.

Prince William Sound means all State and Federal waters within Prince William Sound, Alaska, including the approach to Hinchinbrook Entrance out to and encompassing Seal Rocks.

§ 154.1120 Operating restrictions and interim operating authorization.

top

(a) The owner or operator of a TAPAA facility may not operate in Prince William Sound, Alaska, unless the requirements of this subpart as well as §154.1025 have been met. The owner or operator of a TAPAA facility shall certify to the COTP that he or she has provided, through an oil spill removal organization required by §154.1125, the necessary response resources to remove, to the maximum extend practicable, a worst case discharge or a discharge of 200,000 barrels of oil, whichever is grater, in Prince William Sound.

(b) Coast Guard approval of a TAPAA facility response plan is effective only so long as the appropriate Regional Citizens Advisory Council(s) is funded pursuant to the requirements of section 5002(k) of the Oil Pollution Act of 1990 (Pub. L. 101–380; 104 Stat. 484, 550).

§ 154.1125 Additional response plan requirements.

top

(a) The owner or operator of a TAPAA facility shall include the following information in the Prince William Sound appendix to the response plan required by subpart F of this part:

(1) *Oil spill removal organization.* Identification of an oil spill removal organization that shall—

(i) Perform response activities;

(ii) Provide oil spill removal and containment training, including training in the operation of prepositioned equipment for personnel, including local residents and fishermen, from the following locations in Prince William Sound:

(A) Valdez;

(B) Tatitlek;

(C) Cordova;

(D) Whittier;

(E) Chenega; and

(F) Fish hatcheries located at Port San Juan, Main Bay, Esther Island, Cannery Creek, and Solomon Gulch.

(iii) Provide a plan for training, in addition to the personnel listed in paragraph (a)(1)(ii) of this section, sufficient numbers of trained personnel to remove, to the maximum extent practicable, a worst case discharge; and

(iv) Address the responsibilities required in §154.1035(b)(3)(iii).

(2) *Exercises.* Identification of exercise procedures that must—

(i) Provide for two exercises of the oil spill removal organization each year that test the ability of the prepositioned equipment and trained personnel required under this subpart to perform effectively;

(ii) Consist of both announced and unannounced drills; and

(iii) Include design(s) for exercises that test either the entire appendix or individual components(s).

(3) *Testing, inspection, and certification.* Identification of a testing, inspecting, and certification program for the prepositioned response equipment required in §154.1130 that must provide for—

(i) Annual testing and equipment inspection in accordance with the manufacturer's recommended procedures, to include—

(A) Start-up and running under load all electrical motors, pumps, power packs, air compressors, internal combustion engines, and oil recovery devices; and

(B) Removal for inspection of no less than one-third of required boom from storage annually, such that all boom will have been removed and inspected within a period of 3 years; and

(ii) Records of equipment tests and inspection.

(iii) Use of an independent entity to certify that the equipment is on-site and in good operating condition and that required tests and inspection have been preformed. The independent entity must have appropriate training and expertise to provide this certification.

(4) *Prepositioned response equipment.* Identification and location of the prepositioned response equipment required in §154.1130 including the make, model, and effective daily recovery rate of each oil recovery resource.

(b) The owner or operator of a TAPAA facility shall submit to the COTP a schedule for the training and drills required by the geographic-specific appendix for Prince William Sound for the following calendar year.

(c) All records required by this section must be available for inspection by the COTP.

§ 154.1130 Requirements for prepositioned response equipment.

top

The owner or operator of a TAPAA facility shall provide the following prepositioned response equipment, located within Prince William Sound, in addition to that required by §§154.1035, 154.1045, or 154.1050:

(a) On-water recovery equipment with a minimum effective daily recovery rate of 30,000 barrels capable of being a scene within 2 hours of notification of a discharge.

(b) On-water storage capacity of 100,000 barrels for recovered oily material capable of being on scene within 2 hours of notification of a discharge.

(c) On-water recovery equipment with a minimum effective daily recovery rate of 40,000 barrels capable of being on scene within 18 hours of notification of discharge.

(d) On-water storage capacity of 300,000 barrels for recovered oily material capable of being on scene within 12 hours of notification of a discharge.

(e) On-water recovery devices and storage equipment located in communities at strategic locations.

(f) Equipment as identified below, for the locations identified in §154.1125(a)(1)(ii) sufficient for the protection of the environment in these locations:

(1) Boom appropriate for the specific locations.

(2) Sufficient boats to deploy boom and sorbents.

(3) Sorbent materials.

(4) Personnel protective clothing and equipment.

(5) Survival equipment.

(6) First aid supplies.

(7) Buckets, shovels, and various other tools.

(8) Decontamination equipment.

(9) Shoreline cleanup equipment.

(10) Mooring equipment.

(11) Anchored buoys at appropriate locations to facilitate the positioning of defensive boom.

(12) Other appropriate removal equipment for the protection of the environment as identified by the COTP.

§ 154.1135 Response plan development and evaluation criteria.

top

The following response times must be used in determining the on scene arrival time in Prince William Sound for the response resources required by §154.1045:

	Tier 1 (hrs.)	Tier 2 (hrs.)	tier 3 (hrs.)
Prince William Sound Area	12	24	36

§ 154.1140 TAPAA facility contracting with a vessel.

top

The owner or operator of a TAPAA facility may contract with a vessel owner or operator to meet some of all of the requirements of subpart G of part 155 of this chapter. The extent to which these requirements are met by the contractual arrangement will be determined by the COTP.

Subpart H—Response Plans for Animal Fats and Vegetable Oils Facilities

top

Source: CGD 91–036, 61 FR 7931, Feb. 29, 1996, unless otherwise noted.

§ 154.1210 Purpose and applicability.

top

(a) The requirements of this subpart are intended for use in developing response plans and identifying response resources during the planning process. They are not performance standards.

(b) This subpart establishes oil spill response planning requirements for an owner or operator of a facility that handles, stores, or transports animal fats or vegetable oils including—

(1) A fixed MTR facility capable of transferring oil in bulk, to or from a vessel with a capacity of 250 barrels or more; and

(2) A mobile MTR facility used or intended to be used to transfer oil to or from a vessel with a capacity of 250 barrels or more.

[USCG–1999–5149, 65 FR 40825, June 30, 2000]

§ 154.1216 Facility classification.

top

(a) The Coast Guard classifies facilities that handle, store, or transport animal fats or vegetable oils as "substantial harm" facilities because they may cause substantial harm to the environment by discharging oil.

(b) The COTP may change the classification of a facility that handles, stores, or transports animal fats or vegetable oils. The COTP may consider the following factors, and any other relevant factors, before changing the classification of a facility:

(1) The type and quantity of oils handled.

(2) The spill history of the facility.

(3) The age of the facility.

(4) The public and commercial water supply intakes near the facility.

(5) The navigable waters near the facility. *Navigable waters* is defined in 33 CFR part 2.36.

(6) The fish, wildlife, and sensitive environments near the facility.

[USCG–1999–5149, 65 FR 40825, June 30, 2000, as amended by USCG–2008–0179, 73 FR 35014, June 19, 2008]

§ 154.1220 Response plan submission requirements.

top

(a) The owner or operator of an MTR facility identified in §154.1216 as a substantial harm facility, shall prepare and submit to the cognizant COTP a response plan that complies with this subpart and all sections of subpart F of this part, as appropriate, except §§154.1015, 154.1016, 154.1017, 154.1028, 154.1045 and 154.1047.

(b) The owner or operator of an MTR facility classified by the COTP under §154.1216(b) as a significant and substantial harm facility, shall prepare and submit for review and approval of the cognizant COTP a response plan that complies with this subpart and all sections of subpart F of this part, as appropriate, except §§154.1015, 154.1016, 154.1017, 154.1028, 154.1045 and 154.1047.

(c) In addition to the requirements in paragraph (a) of this section, the response plan for a mobile MTR facility must meet the requirements of §154.1041 subpart F.

[USCG–1999–5149, 65 FR 40825, June 30, 2000]

§ 154.1225 Specific response plan development and evaluation criteria and other requirements for fixed facilities that handle, store, or transport animal fats or vegetable oils.

top

(a) The owner or operator of a fixed facility that handles, stores, or transports animal fats or vegetable oils must include information in the response plan that identifies—

(1) The procedures and strategies for responding to a worst case discharge and to an average most probable discharge of an animal fat or vegetable oil to the maximum extent practicable; and

(2) Sources of the equipment and supplies necessary to locate, recover, and mitigate such a discharge.

(b) The owner or operator of a fixed facility must ensure the equipment listed in the response plan will operate in the geographic area(s) where the facility operates. To determine if the equipment will operate, the owner or operator must—

(1) Use the criteria in Table 1 and Section 2 of appendix C of this part; and

(2) Consider the limitations in the area contingency plan for the COTP zone where the facility is located, including

(i) Ice conditions;

(ii) Debris;

(iii) Temperature ranges; and

(iv) Weather-related visibility.

(c) The owner or operator of a facility that handles, stores, or transports animal fats or vegetable oils must name the personnel and list the equipment, including those that are specified in §154.1240, that are available by contract or by a method described in §154.1228(a). The owner or operator is not required, but may at their option, refer to the tables in Environmental Protection Agency regulations, 40 CFR 112, Appendix E, Section 10.0, Tables 6 and 7, to determine necessary response resources.

(d) The owner or operator of a facility that handles, stores, or transports animal fats or vegetable oils must ensure that the response resources in paragraph (c) of this section are able to effectively respond to an incident within the amount of time indicated in the following table, unless otherwise specified in §154.1240:

	Tier 1 (hrs.)	Tier 2	Tier 3
Higher volume port area	6	N/A	N/A.
Great Lakes	12	N/A	N/A.
All other river and canal, inland, nearshore, and offshore areas	12	N/A	N/A.

(e) The owner or operator of a facility that handles, stores, or transports animal fats or vegetable oils must—

(1) List in the plan the personnel and equipment that the owner or operator will use to fight fires.

(2) If there is not enough equipment or personnel located at the facility, arrange by contract or a method described in §154.1228(a), or through a cooperative agreement with public fire-fighting resources, to have the necessary personnel and equipment available to fight fires.

(3) Identify an individual located at the facility who will work with the fire department on fires, involving an animal fat or vegetable oil. The individual—

(i) Verifies that there are enough trained personnel and operating equipment within a reasonable distance to the incident to fight fires.

(ii) Can be the qualified individual defined in §154.1020 or an appropriate individual located at the facility.

(f) For a fixed facility, except for facilities that are part of a non-transportation-related fixed onshore facility with a storage capacity of less than 42,000 gallons, the owner or operator must also ensure and identify, through contract or a method described in §154.1228, response resources for an average most probable discharge, including—

(1) At least 1,000 feet of containment boom or two times the length of the longest vessel that regularly conducts operations at the facility, whichever is greater, and the means of deploying and anchoring the boom within 1 hour of the discovery of an incident. Based on site-specific or facility-specific information, the COTP may require the facility owner or operator to make available additional quantities of containment boom within 1 hour of an incident;

(2) Adequate sorbent material located at the facility;

(3) Oil recovery devices and recovered oil storage capacity capable of being at the incident's site within 2 hours of the discovery of an incident; and

(4) Other appropriate equipment necessary to respond to an incident involving the type of oil handled.

(g) For a mobile facility or a fixed facility that is part of a non-transportation-related onshore facility with a storage capacity of less than 42,000 gallons, the owner or operator must meet the requirements of §154.1041, and ensure and identify, through contract or a method described in §154.1228, response resources for an average most probable discharge, including—

(1) At least 200 feet of containment boom and the means of deploying and anchoring the boom within 1 hour of the discovery of an incident. Based on site-specific or facility-specific information, the COTP may require the facility owner or operator to make available additional quantities of containment boom within 1 hour of the discovery of an incident;

(2) Adequate sorbent material capable of being at the site of an incident within 1 hour of its discovery;

(3) Oil recovery devices and recovered oil storage capacity capable of being at incident's site within 2 hours of the discovery of an incident; and

(4) Other equipment necessary to respond to an incident involving the type of oil handled.

(h) The response plan for a facility that is located in any environment with year-round preapproval for use of dispersants and that handles, stores, or transports animal fats and vegetables oils may request a credit for up to 25 percent of the worst case planning volume set forth by subpart F of this part. To receive this credit, the facility owner or operator must identify in the plan and ensure, by contract or other approved means as described in §154.1228(a), the availability of specified resources to apply the dispersants and to monitor their effectiveness. The extent of the credit for dispersants will be based on the volumes of the dispersants available to sustain operations at the manufacturers' recommended dosage rates. Other spill mitigation techniques, including mechanical dispersal, may be identified in the response plan provided they are in accordance with the NCP and the applicable ACP. Resources identified for plan credit should be capable of being on scene within 12 hours of a discovery of a discharge. Identification of these resources does not imply that they will be authorized for use. Actual authorization for use during a spill response will be governed by the provisions of the NCP and the applicable ACP.

[CGD 91–036, 61 FR 7931, Feb. 29, 1996, as amended by USCG–1999–5149, 65 FR 40826, June 30, 2000]

§ 154.1228 Methods of ensuring the availability of response resources by contract or other approved means.

top

(a) When required in this subpart, the availability of response resources must be ensured by the following methods:

(1) The identification of an oil spill removal organization with specified equipment and personnel available within stipulated response times in specified geographic areas. The organization must provide written consent to being identified in the plan;

(2) A document which—

(i) Identifies the personnel, equipment, and services capable of being provided by the oil spill removal organization within stipulated response times in the specified geographic areas;

(ii) Sets out the parties' acknowledgment that the oil spill removal organization intends to commit the resources in the event of a response;

(iii) Permits the Coast Guard to verify the availability of the identified response resources through tests, inspections, and drills;

(iv) Is referenced in the response plan;

(3) Active membership in a local or regional oil spill removal organization that has identified specified personnel and equipment required under this subpart that are available to response to a discharge within stipulated response times in the specified geographic areas;

(4) Certification by the facility owner or operator that specified personnel and equipment required under this subpart are owned, operated, or under the direct control of the facility owner or operator, and are

available within stipulated response times in the specified geographic areas; or

(5) A written contractual agreement with an oil spill removal organization. The agreement must identify and ensure the availability of specified personnel and equipment required under this subpart within stipulated response times in the specified geographic areas.

(b) The contracts and documents required in paragraph (a) of this section must be retained at the facility and must be produced for review upon request by the COTP.

§ 154.1240 Specific requirements for animal fats and vegetable oils facilities that could reasonably be expected to cause substantial harm to the environment.

top

(a) The owner or operator of a facility, classified under §154.1216 as a facility that could reasonably be expected to cause substantial harm to the environment, must submit a response plan that meets the requirements of §154.1035, except as modified by this section.

(b) The plan does not need to list the facility or corporate organizational structure that the owner or operator will use to manage the response, as required by §154.1035(b)(3)(iii).

(c) The owner or operator must ensure and identify, by contract or a method described in §154.1228, that the response resources required under §154.1035(b)(3)(iv) are available for a worst case discharge.

[USCG–1999–5149, 65 FR 40827, June 30, 2000]

Subpart I—Response Plans for Other Non-Petroleum Oil Facilities

top

Source: CGD 91–036, 61 FR 7932, Feb. 29, 1996, unless otherwise noted.

§ 154.1310 Purpose and applicability.

top

This subpart establishes oil spill response planning requirements for an owner or operator of a facility that handles, stores, or transports other non-petroleum oils. The requirements of this subpart are intended for use in developing response plans and identifying response resources during the planning process. They are not performance standards.

§ 154.1320 Response plan submission requirements.

top

An owner or operator of a facility that handles, stores, or transports other non-petroleum oils shall submit a response plan in accordance with the requirements of this subpart, and with all sections of subpart F of this part, except §§154.1045 and 154.1047, which apply to petroleum oils.

§ 154.1325 Response plan development and evaluation criteria for facilities that handle, store, or transport other non-petroleum oils.

top

(a) An owner or operator of a facility that handles, stores, or transports other non-petroleum oils must provide information in his or her plan that identifies—

(1) Procedures and strategies for responding to a worst case discharge of other non-petroleum oils to the maximum extent practicable; and

(2) Sources of the equipment and supplies necessary to locate, recover, and mitigate such a discharge.

(b) An owner or operator of a facility that handles, stores, or transports other non-petroleum oils must ensure that any equipment identified in a response plan is capable of operating in the conditions expected in the geographic area(s) in which the facility operates using the criteria in Table 1 of appendix C of this part. When evaluating the operability of equipment, the facility owner or operator must consider limitations that are identified in the ACPs for the COTP zone in which the facility is located, including—

(1) Ice conditions;

(2) Debris;

(3) Temperature ranges; and

(4) Weather-related visibility.

(c) The owner or operator of a facility that handles, stores, or transports other non-petroleum oils must identify the response resources that are available by contract or other approved means as described in §154.1028(a). The equipment identified in a response plan must include—

(1) Containment boom, sorbent boom, or other methods for containing oil floating on the surface or to protect shorelines from impact;

(2) Oil recovery devices appropriate for the type of other non-petroleum oils handled; and

(3) Other appropriate equipment necessary to respond to a discharge involving the type of oil handled.

(d) Response resources identified in a response plan under paragraph (c) of this section must be capable of commencing an effective on-scene response within the times specified in this paragraph for the applicable operating area:

	Tier 1 (hrs.)	Tier 2	Tier 3
Higher volume port area	6	N/A	N/A
Great Lakes	12	N/A	N/A
All other river and canal, inland, nearshore, and offshore areas	12	N/A	N/A

(e) A response plan for a facility that handles, stores, or transports other non-petroleum oils must identify response resources with firefighting capability. The owner or operator of a facility that does not have adequate firefighting resources located at the facility or that cannot rely on sufficient local firefighting resources must identify and ensure, by contract or other approved means as described in §154.1028(a), the availability of adequate firefighting resources. The response plan must also identify an individual located at the facility to work with the fire department on other non-petroleum oil fires. This individual shall also verify that sufficient well-trained firefighting resources are available within a reasonable response time to a worst case scenario. The individual may be the qualified individual as defined in §154.1020 and identified in the response plan or another appropriate individual located at the facility.

(f) The response plan for a facility that is located in any environment with year-round preapproval for use of dispersants and that handles, stores, or transports other non-petroleum oils may request a credit for up to 25 percent of the worst case planning volume set forth by subpart F of this part. To receive this credit, the facility owner or operator must identify in the plan and ensure, by contract or other approved means as described in §154.1028(a), the availability of specified resources to apply the dispersants and to monitor their effectiveness. The extent of the credit will be based on the volumes of the dispersant available to sustain operations at the manufacturers' recommended dosage rates. Identification of these resources does not imply that they will be authorized for use. Actual authorization for use during a spill response will be governed by the provisions of the NCP and the applicable ACP.

Appendix A to Part 154—Guidelines for Detonation Flame Arresters

top

This appendix contains the draft ASTM standard for detonation flame arresters. Devices meeting this standard will be accepted by the Commandant (CG–522).

1. *Scope*

1.1 This standard provides the minimum requirements for design, construction, performance and testing of detonation flame arresters.

2. *Intent*

2.1 This standard is intended for detonation flame arresters protecting systems containing vapors of flammable or combustible liquids where vapor temperatures do not exceed 60 °C. For all tests, the test media defined in 14.1.1 can be used except where detonation flame arresters protect systems handling vapors with a maximum experimental safe gap (MESG) below 0.9 millimeters. Detonation flame arresters protecting such systems must be tested with appropriate media (the same vapor or a media having a MESG no greater than the vapor). Various gases and their respective MESG are listed in attachment 1.

2.2 The tests in this standard are intended to qualify detonation flame arresters for all in-line applications independent of piping configuration provided the operating pressure is equal to or less than the maximum operating pressure limit specified in the manufacturer's certification and the diameter of the piping system in which the detonation arrester is to be installed is equal to or less than the piping diameter used in the testing.

Note: Detonation flame arresters meeting this standard as Type I devices, which are certified to be effective below 0 °C and which can sustain three stable detonations without being damaged or permanently deformed, also comply with the minimum requirements of the International Maritime Organization, Maritime Safety Committee Circular No. 373 (MSC/Circ. 373/Rev.1).

3. *Applicable Documents*

3.1 ASTM Standards[1]

[1] Footnotes appear at the end of this article.

A395 Ferritic Ductile Iron Pressure-Retaining Castings For Use At Elevated Temperatures.

F722 Welded Joints for Shipboard Piping Systems

F1155 Standard Practice for Selection and Application of Piping System Materials

3.2 ANSI Standards[2]

B16.5 Pipe Flanges and Flanged Fittings.

3.3 Other Documents

3.3.1 ASME Boiler and Pressure Vessel Code[2]

Section VIII, Division 1, Pressure Vessels

Section IX, Welding and Brazing Qualifications.

3.3.2 International Maritime Organization, Maritime Safety Committee[3]

MSC/Circ. 373/Rev. 1—Revised Standards for the Design, Testing and Locating of Devices to Prevent the Passage of Flame into Cargo Tanks in Tankers.

3.3.3 International Electrotechnical Commission[4]

Publication 79–1—Electrical Apparatus for Explosive Gas Atmospheres.

4. *Terminology*

4.1 $\Delta P/P_o$—The dimensionless ratio, for any deflagration and detonation test of 14.3, of the maximum pressure increase (the maximum pressure minus the initial pressure), as measured in the piping system on the side of the arrester where ignition begins by the device described in paragraph 14.3.3, to the initial absolute pressure in the piping system. The initial pressure should be greater than or equal to the

maximum operating pressure specified in paragraph 11.1.7.

4.2 Deflagration—A combustion wave that propagates subsonically (as measured at the pressure and temperature of the flame front) by the transfer of heat and active chemical species to the unburned gas ahead of the flame front.

4.3 Detonation—A reaction in a combustion wave propagating at sonic or supersonic (as measured at the pressure and temperature of the flame front) velocity. A detonation is stable when it has a velocity equal to the speed of sound in the burnt gas or may be unstable (overdriven) with a higher velocity and pressure.

4.4 Detonation flame arrester—A device which prevents the transmission of a detonation and a deflagration.

4.5 Flame speed—The speed at which a flame propagates along a pipe or other system.

4.6 Flame Passage—The transmission of a flame through a device.

4.7 Gasoline Vapors—A non-leaded petroleum distillate consisting essentially of aliphatic hydrocarbon compounds with a boiling range approximating 65 °C/75 °C.

5. *Classification*

5.1 The two types of detonation flame arresters covered in this specification are classified as follows:

5.1.1 Type I—Detonation flame arresters acceptable for applications where stationary flames may rest on the device.

5.1.2 Type II—Detonation flame arresters acceptable for applications where stationary flames are unlikely to rest on the device, and further methods are provided to prevent flame passage when a stationary flame occurs. One example of “further methods” is a temperature monitor and an automatic shutoff valve.

6. *Ordering Information*

6.1 Orders for detonation flame arresters under this specification shall include the following information as applicable:

6.1.1 Type (I or II).

6.1.2 Nominal pipe size.

6 1.3 Each gas or vapor in the system and the corresponding MESG.

6.1.4 Inspection and tests other than specified by this standard.

6.1.5 Anticipated ambient air temperature range.

6.1.6 Purchaser's inspection requirements (see section 10.1).

6.1.7 Description of installation.

6.1.8 Materials of construction (see section 7).

6.1.9 Maximum flow rate and the maximum design pressure drop for that maximum flow rate.

6.1.10 Maximum operating pressure.

7. *Materials*

7.1 The detonation flame arrester housing, and other parts or bolting used for pressure retention, shall be constructed of materials listed in ASTM F 1155 (incorporated by reference, see §154.106), or section VIII, Division 1 of the ASME Boiler and Pressure Vessel Code. Cast and malleable iron shall not be used; however, ductile cast iron in accordance with ASTM A395 may be used.

7.1.1 Arresters, elements, gaskets, and seals must be made of materials resistant to attack by seawater and the liquids and vapors contained in the system being protected (see section 6.1.3).

7.2 Nonmetallic materials, other than gaskets and seals, shall not be used in the construction of pressure retaining components of the detonation flame arrester.

7.2.1 Nonmetallic gaskets and seals shall be non-combustible and suitable for the service intended.

7.3 Bolting materials, other than that of section 7.1, shall be at least equal to those listed in Table 1 of ANSI B16.5.

7.4 The possibility of galvanic corrosion shall be considered in the selection of materials.

7.5 All other parts shall be constructed of materials suitable for the service intended.

8. *Other Requirements*

8.1 Detonation flame arrester housings shall be gas tight to prevent the escape of vapors.

8.2 Detonation flame arrester elements shall fit in the housing in a manner that will insure tightness of metal-to-metal contacts in such a way that flame cannot pass between the element and the housing.

8.2.1 The net free area through detonation flame arrester elements shall be at least 1.5 times the cross-sectional area of the arrester inlet.

8.3 Housings, elements, and seal gasket materials shall be capable of withstanding the maximum and minimum pressures and temperatures to which the device may be exposed under both normal and the specified fire test conditions in section 14, and shall be capable of withstanding the hydrostatic pressure test of section 9.2.3.

8.4 Threaded or flanged pipe connections shall comply with the applicable B16 standards in ASTM F 1155 (incorporated by reference, see §154.106). Welded joints shall comply with ASTM F 722 (incorporated by reference, see §154.106).

8.5 All flat joints of the housing shall be machined true and shall provide for a joint having adequate metal-to-metal contact.

8.6 Where welded construction is used for pressure retaining components, welded joint design details, welding and non-destructive testing shall be in accordance with Section VIII, Division 1, of the ASME Code and ASTM F 722 (incorporated by reference, see §154.106). Welders and weld procedures shall be qualified in accordance with section IX of the ASME Code.

8.7 The design of detonation flame arresters shall allow for ease of inspection and removal of internal elements for replacement, cleaning or repair without removal of the entire device from the system.

8.8 Detonation flame arresters shall allow for efficient drainage of condensate without impairing their efficiency to prevent the passage of flame. The housing may be fitted with one or more drain plugs for this purpose. The design of a drain plug should be such so that by cursory visual inspection it is obvious whether the drain has been left open.

8.9 All fastenings shall be protected against loosening.

8.10 Detonation flame arresters shall be designed and constructed to minimize the effect of fouling under normal operating conditions.

8.11 Detonation flame arresters shall be capable of operating over the full range of ambient air temperatures anticipated.

8.12 Detonation flame arresters shall be of first class workmanship and free from imperfections which may affect their intended purpose.

8.13 Detonation flame arresters shall be tested in accordance with section 9.

9. *Tests*

9.1 Tests shall be conducted by an independent laboratory capable of performing the tests. The

manufacturer, in choosing a laboratory, accepts that it is a qualified independent laboratory by determining that it has (or has access to) the apparatus, facilities, personnel, and calibrated instruments that are necessary to test detonation flame arresters in accordance with this standard.

9.1.1 A test report shall be prepared by the laboratory which shall include:

9.1.1.1 Detailed drawings of the detonation flame arrester and its components (including a parts list identifying the materials of construction).

9.1.1.2 Types of tests conducted and results obtained. This shall include the maximum temperature reached and the length of testing time in section 14.2 in the case of Type II detonation flame arresters.

9.1.1.3 Description of approved attachments (reference 9.2.6).

9.1.1.4 Types of gases or vapors for which the detonation flame arrester is approved.

9.1.1.5 Drawings of the test rig.

9.1.1.6 Record of all markings found on the tested detonation flame arrester.

9.1.1.7 A report number.

9.2 One of each model Type I and Type II detonation flame arrester shall be tested. Where approval of more than one size of a detonation flame arrester model is desired, only the largest and smallest sizes need be tested provided it is demonstrated by calculation and/or other testing that intermediate size devices have equal or greater strength to withstand the force of a detonation and have equivalent detonation arresting characteristics. A change of design, material, or construction which may affect the corrosion resistance, or ability to resist endurance burning, deflagrations or detonations shall be considered a change of model for the purpose of this paragraph.

9.2.1 The detonation flame arrester shall have the same dimensions, configuration, and most unfavorable clearances expected in production units.

9.2.2 A corrosion test shall be conducted. In this test, a complete detonation flame arrester, including a section of pipe similar to that to which it will be fitted, shall be exposed to a 20% sodium chloride solution spray at a temperature of 25 °C for a period of 240 hours, and allowed to dry for 48 hours. Following this exposure, all movable parts shall operate properly and there shall be no corrosion deposits which cannot be washed off.

9.2.3 The detonation flame arrester shall be subjected to a hydrostatic pressure test of at least 350 psig for ten minutes without rupturing, leaking, or showing permanent distortion.

9.2.4 Flow characteristics as declared by the manufacturer, shall be demonstrated by appropriate tests.

9.2.5 Detonation flame arresters shall be tested for endurance burn and deflagration/detonation in accordance with the test procedures in section 14. Type I detonation flame arresters shall show no flame passage when subjected to both tests. Type II detonation flame arresters shall show no evidence of flame passage during the detonation/deflagration tests in section 14.3. Type II detonation flame arresters shall be tested for endurance burn in accordance with section 14.2. From the endurance burn test of a Type II detonation flame arresters, the maximum temperature reached and the test duration shall be recorded and provided as part of the laboratory test report.

9.2.6 Where a detonation flame arrester is provided with cowls, weather hoods and deflectors, etc., it shall be tested in each configuration in which it is provided.

9.2.7 Detonation flame arresters which are provided with a heating arrangement designed to maintain the surface temperature of the device above 85 °C shall pass the required tests at the maximum heated operating temperature.

9.2.8 Each finished detonation arrester shall be pneumatically tested at 10 psig to ensure there are no defects or leakage.

10. *Inspection*

10.1 The manufacturer shall afford the purchaser's inspector all reasonable access necessary to assure that the device is being furnished in accordance with this standard. All examinations and inspections shall be made at the place of manufacture, unless otherwise agreed upon.

10.2 Each finished detonation arrester shall be visually and dimensionally checked to ensure that the device corresponds to this standard, is certified in accordance with section 11 and is marked in accordance with section 12. Special attention shall be given to the checking of welds and the proper fit-ups of joints (see sections 8.5 and 8.6).

11. *Certification*

11.1 Manufacturer's certification that a detonation flame arrester meets this standard shall be provided in an instruction manual. The manual shall include as applicable:

11.1.1 Installation instructions and a description of all configurations tested (reference paragraph 9.2.6). Installation instructions to include the device's limitations.

11.1.2 Operating instructions.

11.1.3 Maintenance requirements.

11.1.3.1 Instructions on how to determine when arrester cleaning is required and the method of cleaning.

11.1.4 Copy of test report (see section 9.1.1).

11.1.5 Flow test data, maximum temperature and time tested (Type II).

11.1.6 The ambient air temperature range over which the device will effectively prevent the passage of flame.

Note: Other factors such as condensation and freezing of vapors should be evaluated at the time of equipment specification.

11.1.7 The maximum operating pressure for which the device is suitable.

12. *Marking*

12.1 Each detonation flame arrester shall be permanently marked indicating:

12.1.1 Manufacturer's name or trademark.

12.1.2 Style, type, model or other manufacturer's designation for the detonation flame arrester.

12.1.3 Size of the inlet and outlet.

12.1.4 Type of device (Type I or II).

12.1.5 Direction of flow through the detonation flame arrester.

12.1.6 Test laboratory and report number.

12.1.7 Lowest MESG of gases that the detonation flame arrester is suitable for.

12.1.8 ASTM designation of this standard.

12.1.9 Ambient air operating temperature range.

12.1.10 Maximum operating pressure.

13. *Quality Assurance*

13.1 Detonation flame arresters shall be designed, manufactured and tested in a manner that ensures they meet the characteristics of the unit tested in accordance with this standard.

13.2 The detonation flame arrester manufacturer shall maintain the quality of the arresters that are designed, tested and marked in accordance with this standard. At no time shall a detonation flame arrester be sold with this standard designation that does not meet the requirements herein.

14. *Test Procedures for Detonation Arresters*

14.1 *Media/Air Mixtures*

14.1.1 For vapors from flammable or combustible liquids with a MESG greater than or equal to 0.9 mm, technical grade hexane or gasoline vapors shall be used for all tests in this section except technical grade propane may be used for the deflagration/detonation tests in section 14.3. For vapors with a MESG less than 0.9 mm, the specific vapor (or alternatively, a media with a MESG less than or equal to the MESG of the vapor) must be used as the test medium in all Section 14 tests.

14.1.2 Hexane, propane, gasoline and other test vapors shall be mixed with air to form the most easily ignitable mixture.[5]

14.2 *Endurance Burn Test Procedure*

14.2.1 An endurance burning test shall be carried out as follows:

14.2.1.1 The test rig shall consist of an apparatus producing an explosive mixture, a small tank with a diaphragm, a prototype of the detonation flame arrester and a firing source in close proximity to the test device (see Figure 1). The detonation flame arrester shall be installed so that the mixture emission is vertically upwards, or installed in the position for which it is designed and which will cause the most severe heating of the device under the prescribed endurance burn conditions. In this position the mixture shall be ignited.

14.2.1.2 Endurance burn test shall start by using the most easily ignitable test vapor/air mixture with the aid of a pilot flame or a spark igniter at the outlet. The flammable mixture may be reignited as necessary in the course of the endurance burn.

14.2.1.3 Temperature measurement will be performed on the surface of the arrester element half way between the center and its edge.

14.2.1.4 By varying the proportions of the flammable mixture and the flow rate, the detonation flame arrester shall be heated by a stable flame on the surface of the arrester until the highest obtainable temperature is reached on the ignited side or until the temperature on the side which was not ignited (protected side) rises 100 °C.

14.2.1.5 The flammable mixture proportions will then be varied again until the conditions which result in the highest temperature on the protected side are achieved. This temperature shall be maintained for a period of ten minutes, after which the flow shall be stopped and the conditions observed. The highest attainable temperature is considered to have been reached when any subsequent rise of temperature does not exceed 0.5°C per minute over a ten minute period.

14.2.1.6 If difficulty arises in establishing the highest attainable temperature on the protected side, the following criteria shall apply. When the increase in temperature on the protected side occurs so slowly that its temperature does not rise 100 °C, the conditions which produced the highest temperature on the ignited side of the arrester will be maintained for two hours. For the condition in which the temperature on the protected side continues to rise at a rate in excess of 0.5 °C per minute for a 10 minute period, endurance burning shall be continued, using the most severe conditions of flammable mixtures and flow rate, for a period of two hours. In either of these cases, at the end of the two hour period, the flow shall be stopped and the conditions observed. The two hour interval shall be measured commencing with the setting of the conditions which produced the most severe conditions of mixture and flow rate. For Type I detonation flame arresters, flame passage shall not occur during this test. For Type II detonation flame arresters, the maximum temperature obtained, and the time elapsed from the time when the most severe conditions are set to when flame passage occurs, shall be recorded. However, for Type II detonation flame arresters the test may be terminated 15 minutes after setting the most severe conditions on the protected side.

14.3 *Deflagration/Detonation Test Procedure*

14.3.1 A detonation flame arrester shall be installed at one end of a pipe of the same diameter as the inlet of the detonation flame arrester (see Figure 2). The length and configuration of the test pipe shall develop a stable detonation[6] at the device and shall be capable, by change in its length or configuration, of developing deflagrations and unstable (overdriven) detonations as measured on the side of the pipe where ignition occurs (run-up side). For deflagration testing, two test piping arrangements shall be used on the outlet side of the detonation flame arrester (the side which is not ignited). In both of the following end arrangements, the outlet side pipe diameter shall be equal to that on the run-up side. In one arrangement, the outlet side pipe shall be at least 10 pipe diameters long with a plastic bag over the free end. (Alternate end of pipe closures are also acceptable provided they easily give way during the course of the test, and the closure allows the required gas concentration to be maintained throughout the test

piping arrangement.) In the other arrangement the outlet side pipe shall be fitted with a restriction located 0.6 meters from the outlet side arrester flange. The size of the restriction for each nominal size detonation flame arrester shall be as follows:

Nominal pipe diameter (inches)	Restriction diameter (inches)
3	1/2
4	1/2
6	1
8	1 1/2
10	1 1/2
12	2
18	2
24	2

The entire pipe shall be filled with the most easily ignitable vapor/air mixture to a test pressure corresponding to or greater than the upper limit of the device's maximum operating pressure (see 11.1.7). In order to obtain this test pressure, a device such as a bursting disc may be fitted on the open end of the device in place of the plastic bag. The concentration of the mixture should be verified by appropriate testing of the gas composition. The vapor/air mixture shall then be ignited.

14.3.2 Flame speeds shall be measured by optical devices capable of providing accuracy of ±5%. These devices shall be situated no more than a distance equal to 3% of the length of the run-up pipe apart with one device no more than 8 inches from the end of the test pipe to which the detonation flame arrester is attached. In addition, each outlet arrangement described in paragraph 14.3.1 shall be fitted with an optical device located no more than 8 inches from the detonation flame arrester outlet.[7]

14.3.3 Explosion pressures within the pipe shall be measured by a high frequency transducer situated in the test pipe no more than 8 inches from the run-up side of the housing of the detonation flame arrester.

14.3.4 Using the first end arrangement (10 pipe diameter outlet) described in paragraph 14.3.1, a series of tests shall be conducted to determine the test pipe length and configuration that results in the maximum unstable (overdriven) detonation having the maximum measured flame speed at the detonation flame arrester. (These tests may also be carried out using a single length of pipe with igniters spaced at varying distances from the arrester.) The flame speeds, explosion pressures and test pipe configurations shall be recorded for each of these tests. The piping configuration that resulted in the highest recorded unstable (overdriven) detonation flame speed shall be used, and the device shall be subjected to at least four additional unstable (overdriven) detonations. In the course of testing, the device shall also demonstrate its ability to withstand five stable detonations, five deflagrations (as determined by flame speed) where $\Delta P/P_o$ was less than 1 and five deflagrations (as determined by flame speed) where $\Delta P/P_o$ was greater than 1 but less than 10. Initiation of deflagrations shall be at several locations to generate a range for $\Delta P/P_o$. Deflagration tests using the restricted outlet arrangement described in paragraph 14.3.1 shall then be conducted. In these tests the device shall demonstrate its ability to stop five deflagrations (as determined by flame speed) generated by the same configurations which resulted in $\Delta P/P_o$ being less than 1 during the deflagration tests which were conducted without the restricted end arrangements, and five deflagrations (as determined by flame speed) generated by the same configurations which resulted in $\Delta P/P_o$ being greater than 1 but less than 10 during the deflagration tests which were conducted without the restricted end arrangements. No evidence of flame passage shall occur during these tests. The flame speeds and explosion pressures for each of these tests shall be recorded.

14.3.5 A device that successfully passes the tests of 14.3.4 shall be considered to be directional (suitable for arresting a detonation advancing only from the direction as tested) except;

14.3.5.1 A device may be tested according to 14.3.4 for detonations approaching from either direction, or

14.3.5.2 The design of the device is symmetrical where each end may be considered to be identical when approached by a detonation from either direction.

[1] Available from the American Society for Testing and Materials (ASTM), 100 Barr Harbor Dr., West Conshohocken, PA 19428–2959.

[2] Available from the American Society of Mechanical Engineers International, Three Park Avenue, New York, NY 10016–5990.

[3] Available from the International Maritime Organization, 4 Albert Embankment, London SE1 7SR, England.

[4] Available from the International Electrotechnical Commission, 1 rue de Varembe, Geneva, Switzerland.

[5] See IEC Publication 79–1.

[6] Some data are available for the estimation of flame speeds in horizontal pipes without detonation flame arresters. Some data indicate that the presence of small obstacles, fittings or bends in the test pipe can accelerate the flame speeds appreciably.

[7] Other pressure and/or flame speed measuring techniques may be used if effective.

FIGURE 1

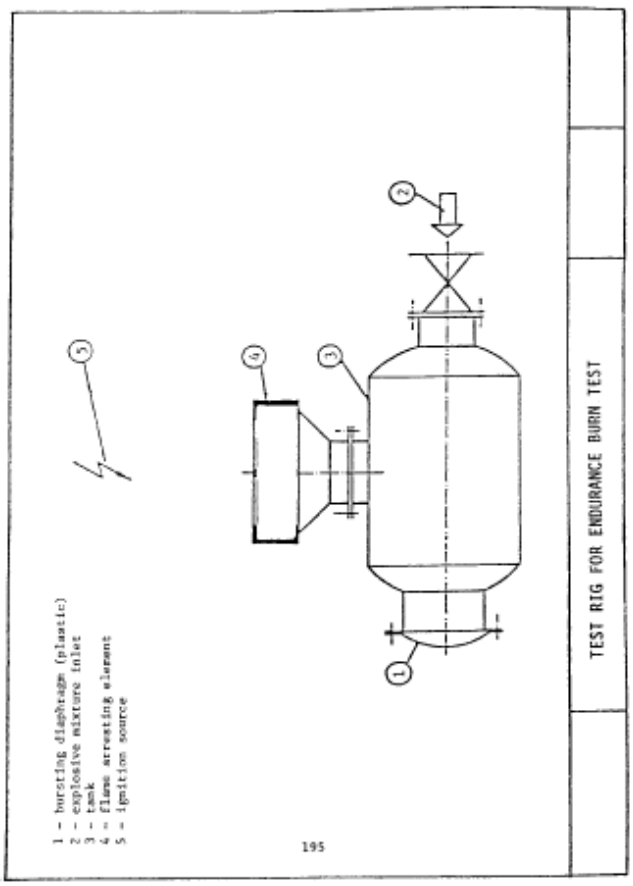

View or download PDF

Figure 2

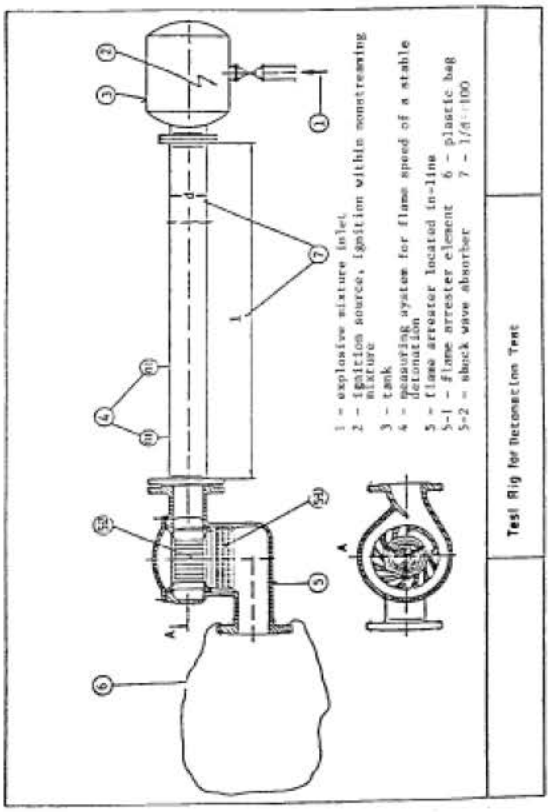

View or download PDF

Attachment 1

Inflammable gas or vapour	Experimental maximum safe gap	
	mm	in.
Methane	1.170	0.046
Blast furnace gas	1.193	0.047
Propane	0.965	0.038
Butane	1.066	0.042
Pentane	1.016	0.040
Hexane	0.965	0.038
Heptane	0.965	0.038
Iso-octane	1.040	0.041
Decane	1.016	0.040
Benzene	0.99	0.039
Xylene	1.066	0.042
Cyclohexane	0.94	0.037
Acetone	1.016	0.040
Ethylene	0.71	0.028
Methyl-ethyl-ketone	1.016	0.040
Carbon monoxide	0.915	0.036
Methyl-acetate	0.990	0.039
Ethyl-acetate	1.04	0.041

Propyl-acetate	1.04	0.041
Butyl-acetate	1.016	0.040
Amyl-acetate	0.99	0.039
Methyl alcohol	0.915	0.036
Ethyl alcohol	1.016	0.040
Iso-butyl-alcohol	0.965	0.038
Butyl-alcohol (Normal)	0.94	0.037
Amyl-alcohol	0.99	0.039
Ethyl-ether	0.864	0.034
Coal gas ($H_2$57%)	0.482	0.019
Acetylene	≤0.025	≤0.001
Carbon disulphide	0.203	0.008
Hydrogen	0.102	0.004
Blue water gas ($H_2$53% CO 47%)	0.203	0.008
Ethyl nitrate	≤0.025	≤0.001
Ammonia	[1]3.33	[1]0.133
Ethylene oxide	0.65	0.026
Ethyl nitrite	0.922	0.038

[1]Approximately.

[CGD 88–102, 55 FR 25435, June 21, 1990; 55 FR 39270, Sept. 26, 1990, as amended by CGD 96–026, 61 FR 33666, June 28, 1996; USCG–1999–5832, 64 FR 34715, June 29, 1999; USCG–2000–7223, 65 FR 40058, June 29, 2000; USCG–2010–0351, 75 FR 36284, June 25, 2010]

Appendix B to Part 154—Standard Specification for Tank Vent Flame Arresters

top

1. *Scope*

1.1 This standard provides the minimum requirements for design, construction, performance and testing of tank vent flame arresters.

2. *Intent*

2.1 This standard is intended for flame arresters protecting systems containing vapors of flammable or combustible liquids with a flashpoint that does not exceed 60 °C. The test media defined in 14.1.1 can be used except where arresters protect systems handling vapors with a maximum experimental safe gap (MESG) below 0.9 millimeters. Flame arresters protecting such systems must be tested with appropriate media (the same vapor or a media having a MESG no greater than the vapor). Various gases and their respective MESG are listed in Attachment 1.

Note: Flame arresters meeting this standard also comply with the minimum requirements of the International Maritime Organization, Maritime Safety Committee Circular No. 373 (MSC/Circ. 373/Rev. 1).

3. *Applicable Documents*

3.1 ASTM Standards[1] F722 Welded Joints for Shipboard Piping Systems; F1155 Standard Practice for Selection and Application of Piping System Materials

[1] Footnotes appear at the end of this article.

3.2 ANSI Standards[2] B16.5 Pipe Flanges and Flanged Fittings.

3.3 Other Documents

3.3.1 ASME Boiler and Pressure Vessel Code[2] section VIII, Division 1, Pressure Vessels; section IX, Welding and Brazing Qualifications.

3.3.2 International Maritime Organization, Maritime Safety Committee[3] MSC/Circ. 373/Rev. 1—Revised Standards for the Design, Testing and Locating of Devices to Prevent the Passage of Flame into Cargo Tanks in Tankers.

3.3.3 International Electrotechnical Commission[4] Publication 79.1—Electrical Apparatus for Explosive Gas Atmospheres.

4. *Terminology*

4.1 Flame arrester—A device to prevent the passage of flame in accordance with a specified performance standard. Its flame arresting element is based on the principle of quenching.

4.2 Flame speed—The speed at which a flame propagates along a pipe or other system.

4.3 Flame Passage—The transmission of a flame through a flame arrester.

4.4 Gasoline Vapors—A non-leaded petroleum distillate consisting essentially of aliphatic hydrocarbon compounds with a boiling range approximating 65 °C/75 °C.

5. *Classification*

5.1 The two types of flame arresters covered in this specification are classified as follows:

5.1.1 Type I—Flame arresters acceptable for end-of-line applications.

5.1.2 Type II—Flame arresters acceptable for in-line applications.

6. *Ordering Information*

6.1 Orders for flame arresters under this specification shall include the following information as applicable:

6.1.1 Type (I or II).

6.1.2 Nominal pipe size.

6.1.3 Each gas or vapor in the tank being protected by the flame arrester, and the corresponding MESG.

6.1.4 Inspection and tests other than specified by this standard.

6.1.5 Anticipated ambient air temperature range.

6.1.6 Purchaser's inspection requirements (see section 10.1).

6.1.7 Description of installation (distance and configuration of pipe between the arrester, and the atmosphere or potential ignition source) (see section 9.2.4.2).

6.1.8 Materials of construction (see section 7).

6.1.9 Maximum flow rate and the design pressure drop for that maximum flow rate.

7. *Materials*

7.1 The flame arrester housing, and other parts or bolting used for pressure retention, shall be constructed of materials listed in ASTM F 1155 (incorporated by reference, see §154.106), or section VIII, Division 1 of the ASME Boiler and Pressure Vessel Code.

7.1.1 Arresters, elements, gaskets, and seals must be of materials resistant to attack by seawater and

the liquids and vapors contained in the tank being protected (see section 6.1.3).

7.2 Nonmetallic materials, other than gaskets and seals, shall not be used in the construction of pressure retaining components of the flame arrester.

7.2.1 Nonmetallic gaskets and seals shall be non-combustible and suitable for the service intended.

7.3 Bolting materials, other than that of Section 7.1, shall be at least equal to those listed in Table 1 of ANSI B16.5.

7.4 The possibility of galvanic corrosion shall be considered in the selection of materials.

7.5 All other parts shall be constructed of materials suitable for the service intended.

8. *Other Requirements*

8.1 Flame arrester housings shall be gas tight to prevent the escape of vapors.

8.2 Flame arrester elements shall fit in the housing in a manner that will insure tightness of metal-to-metal contacts in such a way that flame cannot pass between the element and the housing.

8.2.1 The net free area through flame arrester elements shall be at least 1.5 times the cross-sectional area of the arrester inlet.

8.3 Housings and elements shall be of substantial construction and designed for the mechanical and other loads intended during service. In addition, they shall be capable of withstanding the maximum and minimum pressures and temperatures to which the device may be exposed under both normal and the specified fire test conditions in section 14.

8.4 Threaded or flanged pipe connections shall comply with the applicable B16 standards in ASTM F 1155 (incorporated by reference, see §154.106). Welded joints shall comply with ASTM F 722 (incorporated by reference, see §154.106).

8.5 All flat joints of the housing shall be machined true and shall provide for a joint having adequate metal-to-metal contact.

8.6 Where welded construction is used for pressure retaining components, welded joint design details, welding and non-destructive testing shall be in accordance with section VIII, Division 1, of the ASME Code and ASTM F 722 (incorporated by reference, see §154.106). Welders and weld procedures shall be qualified in accordance with section IX of the ASME Code.

8.7 The design of flame arresters shall allow for ease of inspection and removal of internal elements for replacement, cleaning or repair without removal of the entire device from the system.

8.8 Flame arresters shall allow for efficient drainage of condensate without impairing their efficiency to prevent the passage of flame.

8.9 All fastenings shall be protected against loosening.

8.10 Flame arresters shall be designed and constructed to minimize the effect of fouling under normal operating conditions.

8.11 Flame arresters shall be capable of operating over the full range of ambient air temperatures anticipated.

8.12 End-of-line flame arresters shall be so constructed as to direct the efflux vertically upward.

8.13 Flame arresters shall be of first class workmanship and free from imperfections which may affect their intended purpose.

8.14 Tank vent flame arresters shall show no flame passage when subjected to the tests in 9.2.4.

9. *Prototype Tests*

9.1 Tests shall be conducted by an independent laboratory capable of performing the tests. The manufacturer, in choosing a laboratory, accepts that it is a qualified independent laboratory by

determining that it has (or has access to) the apparatus, facilities, personnel, and calibrated instruments that are necessary to test flame arresters in accordance with this standard.

9.1.1 A test report shall be prepared by the laboratory which shall include:

9.1.1.1 Detailed drawings of the flame arrester and its components (including a parts list identifying the materials of construction).

9.1.1.2 Types of tests conducted and results obtained.

9.1.1.3 Specific advice on approved attachments (see section 9.2.4.1).

9.1.1.4 Types of gases or vapors for which the flame arrester is approved (see section 6.1.3).

9.1.1.5 Drawings of the test rig.

9.1.1.6 Record of all markings found on the tested flame arrester.

9.1.1.7 A report number.

9.2 One of each model Type I and Type II flame arrester shall be tested. Where approval of more than one size of a flame arrester model is desired, the largest and smallest sizes shall be tested. A change of design, material, or construction which may affect the corrosion resistance, endurance burn, or flashback capabilities of the flame arrester shall be considered a change of model for the purpose of this paragraph.

9.2.1 The flame arrester shall have the same dimensions, configuration, and the most unfavorable clearances expected in production units.

9.2.2 A corrosion test shall be conducted. In this test, a complete arrester, including a section of pipe similar to that to which it will be fitted, shall be exposed to a 20% sodium chloride solution spray at a temperature of 25 degrees C for a period of 240 hours, and allowed to dry for 48 hours. Following this exposure, all movable parts shall operate properly and there shall be no corrosion deposits which cannot be washed off.

9.2.3 Performance characteristics as declared by the manufacturer, such as flow rates under both positive and negative pressure, operating sensitivity, flow resistance, and velocity, shall be demonstrated by appropriate tests.

9.2.4 Tank vent flame arresters shall be tested for endurance burn and flashback in accordance with the test procedures in section 14. The following constraints apply:

9.2.4.1 Where a Type I flame arrester is provided with cowls, weather hoods and deflectors, etc., it shall be tested in each configuration in which it is provided.

9.2.4.2 Type II arresters shall be specifically tested with the inclusion of all pipes, tees, bends, cowls, weather hoods, etc., which may be fitted between the arrester and the atmosphere.

9.2.5 Devices which are provided with a heating arrangement shall pass the required tests at the heated temperature.

9.2.6 After all tests are completed, the device shall be disassembled and examined, and no part of the device shall be damaged or show permanent deformation.

10. *Inspection*

10.1 The manufacturer shall afford the purchaser's inspector all reasonable facilities necessary to assure that the material is being furnished in accordance with this standard. All examinations and inspections shall be made at the place of manufacture, unless otherwise agreed upon.

10.2 Each finished flame arrester shall be visually and dimensionally checked to ensure that the device corresponds to this standard, is certified in accordance with section 11 and is marked in accordance with section 12. Special attention shall be given to checking the proper fit-up of joints (see sections 8.5 and 8.6)

11. *Certification*

11.1 Manufacturer's certification that a flame arrester has been constructed in accordance with this standard shall be provided in an instruction manual. The manual shall include as applicable:

11.1.1 Installation instructions and a description of all configurations tested (reference paragraph 9.2.4.1 and 9.2.4.2). Installation instructions to include manufacturer's recommended limitations based on all configurations tested.

11.1.2 Operating instructions.

11.1.3 Maintenance requirements.

11.1.3.1 Instructions on how to determine when flame arrester cleaning is required and the method of cleaning.

11.1.4 Copy of test report (see section 9.1.1).

11.1.5 Flow test data, including flow rates under both positive and negative pressures, operating sensitivity, flow resistance, and velocity.

11.1.6 The ambient air temperature range over which the device will effectively prevent the passage of flame. (Note:Other factors such as condensation and freezing of vapors should be evaluated at the time of equipment specification.)

12. *Marking*

12.1 Each flame arrester shall be permanently marked indicating:

12.1.1 Manufacturer's name or trademark.

12.1.2 Style, type, model or other manufacturer's designation for the flame arrester.

12.1.3 Size of the inlet and outlet.

12.1.4 Type of device (Type I or II).

12.1.5 Direction of flow through the flame arrester.

12.1.6 Test laboratory and report number.

12.1.7 Lowest MESG of gases for which the flame arrester is suitable for.

12.1.8 Ambient air operating temperature range.

12.1.9 ASTM designation of this standard.

13. *Quality Assurance*

13.1 Flame arresters shall be designed, manufactured and tested in a manner that ensures they meet the characteristics of the unit tested in accordance with this standard.

13.2 The flame arrester manufacturer shall maintain the quality of the flame arresters that are designed, tested and marked in accordance with this standard. At no time shall a flame arrester be sold with this standard designation that does not meet the requirements herein.

14. *Test Procedures for Flame Arresters*

14.1 Media/Air Mixtures

14.1.1 For vapors from flammable or combustible liquids with a MESG greater than or equal to 0.9 mm, technical grade hexane or gasoline vapors shall be used for all tests in this section except technical grade propane may be used for the flashback test in Section 14.2. For vapors with a MESG less than 0.9 mm, the specific vapor (or alternatively, a media with a MESG less than or equal to the MESG of the vapor) must be used as the test medium in all section 14 tests.

14.1.2 Hexane, propane, gasoline and chemical vapors shall be mixed with air to form the most easily

ignitable mixture.[5]

14.2 *Flashback Test*

14.2.1 A flashback test shall be carried out as follows:

14.2.1.1 The test rig shall consist of an apparatus producing an explosive mixture, a small tank with a diaphragm, a prototype of the flame arrester, a plastic bag[6] and a firing source in three positions (see Figure 1).[7]

14.2.1.2 The tank, flame arrester assembly and the plastic bag enveloping the prototype flame arrester shall be filled so that this volume contains the most easily ignitable vapor/air mixture.[8] The concentration of the mixture should be verified by appropriate testing of the gas composition in the plastic bag. Three ignition sources shall be installed along the axis of the bag, one close to the flame arrester, another as far away as possible therefrom, and the third at the midpoint between these two. These three sources shall be fired in succession, one during each of the three tests. Flame passage shall not occur during this test.

14.2.1.3 If flame passage occurs, the tank diaphragm will burst and this will be audible and visible to the operator by the emission of a flame. Flame, heat and pressure sensors may be used as an alternative to a bursting diaphragm.

14.3 *Endurance Burn Test*

14.3.1 An endurance burning test shall be carried out as follows:

14.3.1.1 The test rig as referred to in 14.2 may be used, without the plastic bag. The flame arrester shall be so installed that the mixture emission is vertical. In this position the mixture shall be ignited.

14.3.1.2 Endurance burning shall be achieved by using the most easily ignitable test vapor/air mixture with the aid of a pilot flame or a spark igniter at the outlet. By varying the proportions of the flammable mixture and the flow rate, the arrester shall be heated until the highest obtainable temperature on the cargo tank side of the arrester is reached. The highest attainable temperature may be considered to have been reached when the rate of rise of temperature does not exceed 0.5 °C per minute over a ten minute period. This temperature shall be maintained for a period of ten minutes, after which the flow shall be stopped and the conditions observed. If difficulty arises in establishing the highest attainable temperature, the following criteria shall apply. When the temperature appears to be approaching the maximum temperature, using the most severe conditions of flammable mixtures and flow rate, but increases at a rate in excess of 0.5 °C per minute over a ten minute period, endurance burning shall be continued for a period of two hours after which the flow shall be stopped and the conditions observed. Flame passage shall not occur during this test.

[1] American Society for Testing and Materials (ASTM), 100 Barr Harbor Dr., West Conshohocken, PA 19428–2959.

[2] Available from the American Society of Mechanical Engineers International, Three Park Avenue, New York, NY 10016–5990.

[3] Available from the International Maritime Organization, 4 Albert Embankment, London SEl 7SR, England.

[4] Available from the International Electrotechnical Commission, 1 rue de Varembe, Geneva, Switzerland

[5] See IEC Publication 79–1.

[6] The dimensions of the plastic bag are dependent on those of the flame arrester. The plastic bag may have a circumference of 2 m, a length of 2.5 m and a wall thickness of .05 m.

[7] In order to avoid remnants of the plastic bag from falling back on to the flame arrester being tested after ignition of the fuel/air mixture, it may be useful to mount a coarse wire frame across the flame arrester within the plastic bag. The frame should be constructed so as not to interfere with the test result.

[8] See IEC Publication 79–1.

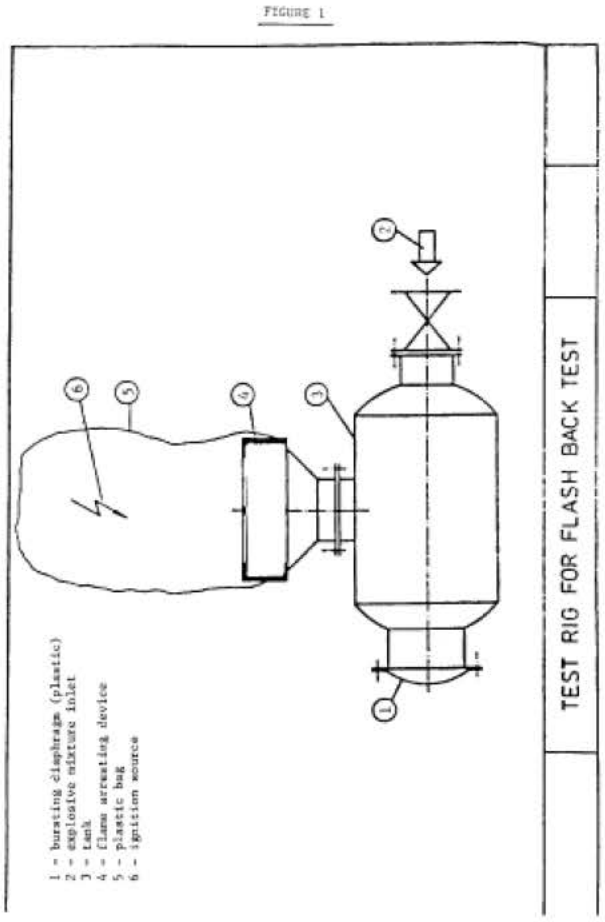

View or download PDF

Attachment 1

Inflammable gas or vapor	Experimental maximum safe gap	
	mm	in.
Methane	1.170	0.046
Blast furnace gas	1.193	0.047
Propane	0.965	0.038
Butane	1.066	0.042
Pentane	1.016	0.040
Hexane	0.965	0.038
Heptane	0.965	0.038
Iso-octane	1.040	0.041
Decane	1.016	0.040
Benzene	0.99	0.039
Xylene	1.066	0.042
Cyclohexane	0.94	0.037
Acetone	1.016	0.040
Ethylene	0.71	0.028
Methyl-ethyl-ketone	1.016	0.040
Carbon monoxide	0.915	0.036
Methyl-acetate	0.990	0.039
Ethyl-acetate	1.04	0.041

Propyl-acetate	1.04	0.041
Butyl-acetate	1.016	0.040
Amyl-acetate	0.99	0.039
Methyl alcohol	0.915	0.036
Ethyl alcohol	1.016	0.040
Iso-butyl-alcohol	0.965	0.038
Butyl-alcohol (Normal)	0.94	0.037
Amyl-alcohol	0.99	0.039
Ethyl-ether	0.864	0.034
Coal gas ($H_2$57%)	0.482	0.019
Acetylene	<0.025	<0.001
Carbon disulphide	0.203	0.008
Hydrogen	0.102	0.004
Blue water gas ($H_2$53% CO 47%)	0.203	0.008
Ethyl nitrate	<0.025	<0.001
Ammonia	[1]3.33	[1]0.133
Ethylene oxide	0.65	0.026
Ethyl nitrite	0.922	0.038

[1]Approximately.

[CGD 88–102, 55 FR 25441, June 21, 1990, as amended by USCG–1999–5832, 64 FR 34715, June 29, 1999; USCG–2000–7223, 65 FR 40058, June 29, 2000]

Appendix C to Part 154—Guidelines for Determining and Evaluating Required Response Resources for Facility Response Plans

top

1. Purpose

1.1 The purpose of this appendix is to describe the procedures for identifying response resources to meet the requirements of subpart F of this part. These guidelines will be used by the facility owner or operator in preparing the response plan and by the Captain of the Port (COTP) when reviewing them. Response resources identified in subparts H and I of this part should be selected using the guidelines in section 2 and Table 1 of this appendix.

2. Equipment Operability and Readiness

2.1 All equipment identified in a response plan must be designed to operate in the conditions expected in the facility's geographic area. These conditions vary widely based on location and season. Therefore, it is difficult to identify a single stockpile of response equipment that will function effectively in each geographic location.

2.2 Facilities handling, storing, or transporting oil in more than one operating environment as indicated in Table 1 of this appendix must identify equipment capable of successfully functioning in each operating environment.

2.3 When identifying equipment for response plan credit, a facility owner or operator must consider the inherent limitations in the operability of equipment components and response systems. The criteria in Table 1 of this appendix should be used for evaluating the operability in a given environment. These criteria reflect the general conditions in certain operating areas.

2.3.1 The Coast Guard may require documentation that the boom identified in a response plan meets the criteria in Table 1. Absent acceptable documentation, the Coast Guard may require that the boom be tested to demonstrate that it meets the criteria in Table 1. Testing must be in accordance with ASTM F 715 (incorporated by reference, see §154.106), or other tests approved by the Coast Guard.

2.4 Table 1 of this appendix lists criteria for oil recovery devices and boom. All other equipment necessary to sustain or support response operations in the specified operating environment must be designed to function in the same conditions. For example, boats which deploy or support skimmers or boom must be capable of being safely operated in the significant wave heights listed for the applicable operating environment.

2.5 A facility owner or operator must refer to the applicable local contingency plan or ACP, as appropriate, to determine if ice, debris, and weather-related visibility are significant factors in evaluating the operability of equipment. The local contingency plan or ACP will also identify the average temperature ranges expected in the facility's operating area. All equipment identified in a response plan must be designed to operate within those conditions or ranges.

2.6 The requirements of subparts F, G, H and I of this part establish response resource mobilization and response times. The distance of the facility from the storage location of the response resources must be used to determine whether the resources can arrive on scene within the stated time. A facility owner or operator shall include the time for notification, mobilization, and travel time of response resources identified to meet the maximum most probable discharge and Tier 1 worst case discharge response time requirements. For subparts F and G, tier 2 and 3 response resources must be notified and mobilized as necessary to meet the requirements for arrival on scene in accordance with §§154.1045 or 154.1047 of subpart F, or §154.1135 of subpart G, as appropriate. An on water speed of 5 knots and a land speed of 35 miles per hour is assumed unless the facility owner or operator can demonstrate otherwise.

2.7 For subparts F and G, in identifying equipment, the facility owner or operator shall list the storage location, quantity, and manufacturer's make and model. For oil recovery devices, the effective daily recovery capacity, as determined using section 6 of this appendix must be included. For boom, the overall boom height (draft plus freeboard) should be included. A facility owner or operator is responsible for ensuring that identified boom has compatible connectors.

2.8 For subparts H and I, in identifying equipment, the facility owner or operator shall list the storage location, quantity, and manufacturer's make and model. For boom, the overall boom height (draft plus freeboard) should be included. A facility owner or operator is responsible for ensuring that identified boom has compatible connectors.

3. Determining Response Resources Required for the Average Most Probable Discharge

3.1 A facility owner or operator shall identify sufficient response resources available, through contract or other approved means as described in §154.1028(a), to respond to the average most probable discharge. The equipment must be designed to function in the operating environment at the point of expected use.

3.2 The response resources must include:

3.2.1 1,000 feet of containment boom or two times the length of the largest vessel that regularly conducts oil transfers to or from the facility, whichever is greater, and a means deploying it available at the spill site within 1 hour of the discovery of a spill.

3.2.2 Oil recovery devices with an effective daily recovery capacity equal to the amount of oil discharged in an average most probable discharge or greater available at the facility within 2 hours of the detection of an oil discharge.

3.2.3 Oil storage capacity for recovered oily material indicated in section 9.2 of this appendix.

4. Determining Response Resources Required for the Maximum Most Probable Discharge

4.1 A facility owner or operator shall identify sufficient response resources available, by contract or other approved means as described in §154.1028(a), to respond to discharges up to the maximum most probable discharge volume for that facility. This will require response resources capable of containing and collecting up to 1,200 barrels of oil or 10 percent of the worst case discharge, whichever is less. All equipment identified must be designed to operate in the applicable operating environment specified in Table 1 of this appendix.

4.2 Oil recovery devices identified to meet the applicable maximum most probable discharge volume planning criteria must be located such that they arrive on scene within 6 hours in higher volume port areas (as defined in154.1020) and the Great Lakes and within 12 hours in all other areas.

4.3 Because rapid control, containment, and removal of oil is critical to reduce spill impact, the effective daily recovery capacity for oil recovery devices must equal 50 percent of the planning volume applicable for the facility as determined in section 4.1 of this appendix. The effective daily recovery capacity for oil recovery devices identified in the plan must be determined using the criteria in section 6 of this

appendix.

4.4 In addition to oil recovery capacity, the plan must identify sufficient quantities of containment boom available, by contract or other approved means as described in §154.1028(a), to arrive within the required response times for oil collection and containment and for protection of fish and wildlife and sensitive environments. While the regulation does not set required quantities of boom for oil collection and containment, the response plan must identify and ensure, by contract or other approved means as described in §154.1028(a), the availability of the boom identified in the plan for this purpose.

4.5 The plan must indicate the availability of temporary storage capacity to meet the guidelines of section 9.2 of this appendix. If available storage capacity is insufficient to meet this level, then the effective daily recovery capacity must be derated to the limits of the available storage capacity.

4.6 The following is an example of a maximum most probable discharge volume planning calculation for equipment identification in a higher volume port area: The facility's worst case discharge volume is 20,000 barrels. Ten percent of this is 2,000 barrels. Since this is greater than 1,200 barrels, 1,200 barrels is used as the planning volume. The effective daily recovery capacity must be 50 percent of this, or 600 barrels per day. The ability of oil recovery devices to meet this capacity will be calculated using the procedures in section 6 of this appendix. Temporary storage capacity available on scene must equal twice the daily recovery rate as indicated in section 9 of this appendix, or 1,200 barrels per day. This is the information the facility owner or operator will use to identify and ensure the availability of, through contract or other approved means as described in §154.1028(a), the required response resources. The facility owner will also need to identify how much boom is available for use.

5. Determining Response Resources Required for the Worst Case Discharge to the Maximum Extent Practicable

5.1 A facility owner or operator shall identify and ensure availability of, by contract or other approved means, as described in §154.1028(a), sufficient response resources to respond to the worst case discharge of oil to the maximum extent practicable. Section 7 of this appendix describes the method to determine the required response resources.

5.2 Oil spill response resources identified in the response plan and available through contract or other approved means, as described in §154.1028(a), to meet the applicable worst case discharge planning volume must be located such that they can arrive at the scene of a discharge within the times specified for the applicable response tiers listed in §154.1045.

5.3 The effective daily recovery capacity for oil recovery devices identified in a response plan must be determined using the criteria in section 6 of this appendix. A facility owner or operator shall identify the storage locations of all response resources that must be used to fulfill the requirements for each tier. The owner or operator of a facility whose required daily recovery capacity exceeds the applicable response capability caps in Table 5 of this appendix shall identify sources of additional equipment, their locations, and the arrangements made to obtain this equipment during a response. The owner or operator of a facility whose calculated planning volume exceeds the applicable contracting caps in Table 5 shall identify sources of additional equipment equal to twice the cap listed in Tiers 1, 2, and 3 or the amount necessary to reach the calculated planning volume, whichever is lower. The resources identified above the cap must be capable of arriving on scene not later than the Tiers 1, 2, and 3 response times in §154.1045. No contract is required. While general listings of available response equipment may be used to identify additional sources, a response plan must identify the specific sources, locations, and quantities of equipment that a facility owner or operator has considered in his or her planning. When listing Coast Guard classified oil spill removal organization(s) which have sufficient removal capacity to recover the volume above the response capability cap for the specific facility, as specified in Table 5 of this appendix, it is not necessary to list specific quantities of equipment.

5.4 A facility owner or operator shall identify the availability of temporary storage capacity to meet the requirements of section 9.2 of this appendix. If available storage capacity is insufficient to meet this requirement, then the effective daily recovery capacity must be derated to the limits of the availabile storage capacity.

5.5 When selecting response resources necessary to meet the response plan requirements, the facility owner or operator must ensure that a portion of those resources are capable of being used in close-to-shore response activities in shallow water. The following percentages of the on-water response equipment identified for the applicable geographic area must be capable of operating in waters of 6 feet or less depth:

(i) Offshore—10 percent

(ii) Nearshore/inland/Great Lakes/rivers and canals—20 percent.

5.6 In addition to oil spill recovery devices, a facility owner or operator shall identify sufficient quantities

of boom that are available, by contract or other approved means as described in §154.1028(a), to arrive on scene within the required response times for oil containment and collection. The specific quantity of boom required for collection and containment will depend on the specific recovery equipment and strategies employed. A facility owner or operator shall also identify sufficient quantities of oil containment boom to protect fish and wildlife and sensitive environments for the number of days and geographic areas specified in Table 2. Sections 154.1035(b)(4)(iii) and 154.1040(a), as appropriate, shall be used to determine the amount of containment boom required, through contract or other approved means as described in §154.1028(a), to protect fish and wildlife and sensitive environments.

5.7 A facility owner or operator must also identify, through contract or other approved means as described in §154.1028(a), the availability of an oil spill removal organization capable of responding to a shoreline cleanup operation involving the calculated volume of oil and emulsified oil that might impact the affected shoreline. The volume of oil that must be planned for is calculated through the application of factors contained in Tables 2 and 3. The volume calculated from these tables is intended to assist the facility owner or operator in identifying a contractor with sufficient resources and expertise. This planning volume is not used explicitly to determine a required amount of equipment and personnel.

6. Determining Effective Daily Recovery Capacity for Oil Recovery Devices

6.1 Oil recovery devices identified by a facility owner or operator must be identified by manufacturer, model, and effective daily recovery capacity. These rates must be used to determine whether there is sufficient capacity to meet the applicable planning critieria for the average most probable discharge, maximum most probable discharge, and worst case discharge to the maximum extent practicable.

6.2 For the purpose of determining the effective daily recovery capacity of oil recovery devices, the formula listed in section 6.2.1 of this appendix will be used. This method considers potential limitations due to available daylight, weather, sea state, and percentage of emulsified oil in the recovered material. The Coast Guard may assign a lower efficiency factor to equipment listed in a response plan if it determines that such a reduction is warranted.

6.2.1 The following formula must be used to calculate the effective daily recovery capacity:

R=T×24 hours×E

R=Effective daily recovery capacity

T=Throughout rate in barrels per hour (nameplate capacity)

E=20 percent Efficiency factor (or lower factor as determined by Coast Guard)

6.2.2 For those devices in which the pump limits the throughput of liquid, throughput rate will be calculated using the pump capacity.

6.2.3 For belt or mop type devices, the throughput rate will be calculated using the speed of the belt or mop through the device, assumed thickness of oil adhering to or collected by the device, and surface area of the belt or mop. For purposes of this calculation, the assumed thickness of oil will be 1/4 inch.

6.2.4 Facility owners or operators including oil recovery devices whose throughput is not measurable using a pump capacity or belt/mop speed may provide information to support an alternative method of calculation. This information must be submitted following the procedures in paragraph 6.3.2 of this appendix.

6.3 As an alternative to 6.2, a facility owner or operator may submit adequate evidence that a different effective daily recovery capacity should be applied for a specific oil recovery device. Adequate evidence is actual verified performance data in spill conditions or tests using ASTM F 631 (incorporated by reference, see §154.106), or an equivalent test approved by the Coast Guard.

6.3.1 The following formula must be used to calculate the effective daily recovery capacity under this alternative:

R=D×U

R=Effective daily recovery capacity

D=Average Oil Recovery Rate in barrels per hour (Item 26 in ASTM F 808; Item 13.2.16 in ASTM F 631; or actual performance data)

U=Hours per day that a facility owner or operator can document capability to operate equipment under

spill conditions. Ten hours per day must be used unless a facility owner or operator can demonstrate that the recovery operation can be sustained for longer periods.

6.3.2 A facility owner or operator proposing a different effective daily recovery rate for use in a response plan shall provide data for the oil recovery devices listed. The following is an example of these calculations:

A weir skimmer identified in a response plan has a manufacturer's rated throughput at the pump of 267 gallons per minute (gpm).

267 gpm=381 barrels per hour

R=381×24×.2=1829 barrels per day

After testing using ASTM procedures, the skimmer's oil recovery rate is determined to be 220 gpm. The facility owner of operator identifies sufficient response resources available to support operations 12 hours per day.

220 gpm=314 barrels per hour

R=314×12=3768 barrels per day

The facility owner or operator will be able to use the higher rate if sufficient temporary oil storage capacity is available. Determinations of alternative efficiency factors under paragraph 6.2 or alternative effective daily recovery capacities under paragraph 6.3 of this appendix will be made by Commandant, (CG–535), 2100 2nd St., SW., Stop 7363, Washington, DC 20593–7363. Response contractors or equipment manufacturers may submit required information on behalf of multiple facility owners or operators directly in lieu of including the request with the response plan submission.

7. Calculating the Worst Case Discharge Planning Volumes

7.1 The facility owner or operator shall plan for a response to a facility's worst case discharge. The planning for on-water recovery must take into account a loss of some oil to the environment due to evaporative and natural dissipation, potential increases in volume due to emulsification, and the potential for deposit of some oil on the shoreline.

7.2 The following procedures must be used to calculate the planning volume used by a facility owner or operator for determining required on water recovery capacity:

7.2.1 The following must be determined: The worst case discharge volume of oil in the facility; the appropriate group(s) for the type of oil handled, stored, or transported at the facility (non-persistent (Group I) or persistent (Groups II, III, or IV)); and the facility's specific operating area. Facilities which handle, store, or transport oil from different petroleum oil groups must calculate each group separately. This information is to be used with Table 2 of this appendix to determine the percentages of the total volume to be used for removal capacity planning. This table divides the volume into three categories: Oil lost to the environment; oil deposited on the shoreline; and oil available for on-water recovery.

7.2.2 The on-water oil recovery volume must be adjusted using the appropriate emulsification factor found in Table 3 of this appendix. Facilities which handle, store, or transport oil from different petroleum groups must assume that the oil group resulting in the largest on-water recovery volume will be stored in the tank or tanks identified as constituting the worst case discharge.

7.2.3 The adjusted volume is multiplied by the on-water oil recovery resource mobilization favor found in Table 4 of this appendix from the appropriate operating area and response tier to determine the total on-water oil recovery capacity in barrels per day that must be identified or contracted for to arrive on-scene with the applicable time for each response tier. Three tiers are specified. For higher volume port areas, the contracted tiers of resources must be located such that they can arrive on scene within 6, 30, and 54 hours of the discovery of an oil discharge. For all other river, inland, nearshore, offshore areas, and the Great Lakes, these tiers are 12, 36, and 60 hours.

7.2.4 The resulting on-water recovery capacity in barrels per day for each tier must be used to identify response resources necessary to sustain operations in the applicable operating area. The equipment must be capable of sustaining operations for the time period specified in Table 2 of this appendix. The facility owner or operator must identify and ensure the availability, through contract or other approved means as described in §154.1028(a), of sufficient oil spill recovery devices to provide the effective daily recovery oil recovery capacity required. If the required capacity exceeds the applicable cap specified in Table 5 of this appendix, then a facility owner or operator shall ensure, by contract or other approved means as described in §154.1028(a), only for the quantity of resources required to meet the cap, but shall identify sources of additional resources as indicated in §154.1045(m). The owner or operator of a

facility whose planning volume exceeds the cap for 1993 must make arrangements to identify and ensure the availability, through contract or other approved means as described in §154.1028(a), of the additional capacity in 1998 or 2003, as appropriate. For a facility that handles, stores, or transports multiple groups of oil, the required effective daily recovery capacity for each group is calculated before applying the cap.

7.3 The following procedures must be used to calculate the planning volume for identifying shoreline cleanup capacity:

7.3.1 The following must be determined: The worst case discharge volume of oil for the facility; the appropriate group(s) for the type of oil handled, stored, or transported at the facility (non-persistent (Group I) or persistent (Groups II, III, or IV)); and the operating area(s) in which the facility operates. For a facility storing oil from different groups, each group must be calculated separately. Using this information, Table 2 of this appendix must be used to determine the percentages of the total planning volume to be used for shoreline cleanup resource planning.

7.3.2 The shoreline cleanup planning volume must be adjusted to reflect an emulsification factor using the same procedure as described in section 7.2.2.

7.3.3 The resulting volume will be used to identify an oil spill removal organization with the appropriate shoreline cleanup capability.

7.3.4 The following is an example of the procedure described above: A facility receives oil from barges via a dock located on a bay and transported by piping to storage tanks. The facility handles Number 6 oil (specific gravity .96) and stores the oil in tanks where it is held prior to being burned in an electric generating plant. The MTR segment of the facility has six 18-inch diameter pipelines running one mile from the dock-side manifold to several storage tanks which are located in the non-transportation-related portion of the facility. Although the facility piping has a normal working pressure of 100 pounds per square inch, the piping has a maximum allowable working pressure (MAWP) of 150 pounds per square inch. At MAWP, the pumping system can move 10,000 barrels (bbls) of Number 6 oil every hour through each pipeline. The facility has a roving watchman who is required to drive the length of the piping every 2 hours when the facility is receiving oil from a barge. The facility operator estimates that it will take approximately 10 minutes to secure pumping operations when a discharge is discovered. Using the definition of worst case discharge provided in §154.1029(b)(ii), the following calculation is provided:

	bbls.
2 hrs + 0.17 hour × 10,000 bbls per hour	21,700
Piping volume = 37,322 ft^3÷ 5.6 ft^3/bbl	+6,664
Discharge volume per pipe	28,364
Number of pipelines	×6
Worst case discharge from MTR facility	170,184

To calculate the planning volumes for onshore recovery:

Worst case discharge: 170,184 bbls. Group IV oil

Emulsification factor (from Table 3): 1.4

Operating Area impacted: Inland

Planned percent oil onshore recovery (from Table 2): Inland 70%

Planning volumes for onshore recovery: Inland 170,184 ×.7 × 1.4 = 166,780 bbls.

Conclusion: The facility owner or operator must contract with a response resource capable of managing a 166,780 barrel shoreline cleanup.

To calculate the planning volumes for on-water recovery:

Worst case discharge: 170,184 bbls. Group IV oil

Emulsification factor (from Table 3): 1.4

Operating Area impacted: Inland

Planned percent oil on-water recovery (from Table 2): Inland 50%

Planning volumes for on-water recovery: Inland 170,184×.5×1.4 = 119,128 bbls.

To determine the required resources for on-water recovery for each tier, use the mobilization factors from Table 4:

	Tier 1	Tier 2	Tier 3
Inland = 119,128 bbls.	× .15	× .25	× .40
Barrels per day (pbd)	17,869	29,782	47,652

Conclusion: Since the requirements for all tiers for inland exceed the caps, the facility owner will only need to contract for 10,000 bpd for Tier 1, 20,000 bpd for Tier 2, and 40,000 bpd for Tier 3. Sources for the bpd on-water recovery resources above the caps for all three Tiers need only be identified in the response plan.

Twenty percent of the capability for Inland, for all tiers, must be capable of operating in water with a depth of 6 feet or less.

The facility owner or operator will also be required to identify or ensure, by contract or other approved means as described in §154.1028(a), sufficient response resources required under §§154.1035(b)(4) and 154.1045(k) to protect fish and wildlife and sensitive environments identified in the response plan for the worst case discharge from the facility.

The COTP has the discretion to accept that a facility can operate only a limited number of the total pipelines at a dock at a time. In those circumstances, the worst case discharge must include the drainage volume from the piping normally not in use in addition to the drainage volume and volume of oil discharged during discovery and shut down of the oil discharge from the operating piping.

8. Determining the Capability of High-Rate Response Methods

8.1. Calculate cumulative dispersant application capacity as follows:

8.1.1 A facility owner or operator must plan either for a dispersant capacity to respond to a facility's worst case discharge (WCD) of oil, or for the amount of the dispersant resource cap as required by §154.1045(i)(3) of this chapter, whichever is the lesser amount. When planning for the cumulative application capacity required, the calculations must account for the loss of some oil to the environment due to natural dissipation causes (primarily evaporation). The following procedure must be used to determine the cumulative application requirements:

8.1.2 Determine the WCD volume of oil in gallons and the appropriate oil group for the type of petroleum oil (persistent Groups II, III, and IV). For facilities with mixed petroleum oils, assume a total WCD volume using the group that constitutes the largest portion of the oil being handled or the group with the smallest natural dissipation factor;

8.1.3 Multiply the total WCD amount in gallons by the natural dissipation factor for the appropriate oil group as follows: Group II factor is 0.50; Group III is 0.30; and Group IV is 0.10. This represents the amount of oil that can be expected to be lost to natural dissipation in a nearshore environment. Subtract the oil amount lost to natural dissipation from the total WCD amount to determine the remaining oil available for treatment by dispersant application; and

8.1.4 Multiply the oil available for dispersant treatment by the dispersant-to-oil planning application ratio of 1 part dispersant to 20 parts oil (0.05). The resulting number represents the cumulative total dispersant-application capability that must be ensured available within the first 60 hours.

8.1.5(i) The following is an example of the procedure described in paragraphs 8.1.1 through 8.1.4 above: A facility with a 1,000,000 gallon WCD of crude oil (specific gravity 0.87) is located in an area with pre-authorization for dispersant use in the nearshore environment on the U.S. East Coast:

WCD: 1,000,000 gallons, Group III oil.

Natural dissipation factor for Group III: 30 percent.

General formula to determine oil available for dispersant treatment: (WCD)−[(WCD) × (natural dissipation factor)] = available oil.

E.g., 1,000,000 gal−(1,000,000 gal × .30) = 700,000 gallons of available oil.

Cumulative application capacity = Available oil × planning application ratio (1 gal dispersant/20 gals oil = 0.05).

E.g., 700,000 gal oil × (0.05) = 35,000 gallons cumulative dispersant-application capacity.

(ii) The requirements for cumulative dispersant-application capacity (35,000 gallons) for this facility's WCD is less than the overall dispersant capability for non-Gulf Coast waters required by §155.1045(i)(3) of this chapter. Because paragraph 8.1.1 of this appendix requires owners and operators to ensure the availability of the lesser of a facility's dispersant requirements for WCD or the amount of the dispersant cap provided for in §154.1045(i)(3), the facility in this example would be required to ensure the availability of 35,000 gallons of dispersant. More specifically, this facility would be required to meet the following tier requirements in §154.1045(i)(3), which total 35,000 gallons application:

Tier 1—4,125 gallons—Completed in 12 hours.

Tier 2—23,375 gallons—Completed in 36 hours.

Tier 3—7,500 gallons—Completed in 60 hours.

8.2 Determine Effective Daily Application Capacities (EDACs) for dispersant response systems as follows:

8.2.1 EDAC planning estimates for compliance with the dispersant application requirements in §154.1045(i)(3) are to be based on:

8.2.1.1 The spill occurring at the facility;

8.2.1.2 Specific dispersant application platform operational characteristics identified in the Dispersant Mission Planner 2 or as demonstrated by operational tests;

8.2.1.3 Locations of primary dispersant staging sites; and

8.2.1.4 Locations and quantities of dispersant stockpiles.

8.2.2 EDAC calculations with supporting documentation must be submitted to the NSFCC for classification as a Dispersant Oil Spill Removal Organization.

8.2.3(i) EDAC can also be calculated using the Dispersant Mission Planner 2 (DMP2). The DMP2 is a downloadable application that calculates EDAC for different dispersant response systems. It is located on the Internet at: *http://www.response.restoration.noaa.gov/spilltools.*

(ii) The DMP2 contains operating information for the vast majority of dispersant application platforms, including aircraft, both rotary and fixed wing, and vessels. The DMP2 produces EDAC estimates by performing calculations based on performance parameters of dispersant application platforms, locations of primary dispersant staging sites, home-based airport or port locations, and the facility location (for the spill site).

8.2.4 For each Captain of the Port zone where a dispersant response capability is required, the response plan must identify:

8.2.4.1 The type, number, and location of each dispersant-application platform intended for use to meet dispersant delivery requirements specified in §154.1045(i)(3) of this chapter;

8.2.4.2 The amount and location of available dispersant stockpiles to support each platform; and,

8.2.4.3 A primary staging site for each platform that will serve as its base of operations for the duration of the response.

8.3 In addition to the equipment and supplies required, a facility owner or operator must identify a source of support to conduct the monitoring and post-use effectiveness evaluation required by applicable regional plans and ACPs.

8.4 Identification of the resources for dispersant application does not imply that the use of this technique will be authorized. Actual authorization for use during a spill response will be governed by the provisions of the National Oil and Hazardous Substances Contingency Plan (40 CFR part 300) and the applicable

Local or Area Contingency Plan.

9. Additional Equipment Necessary To Sustain Response Operations

9.1 A facility owner or operator is responsible for ensuring that sufficient numbers of trained personnel and boats, aerial spotting aircraft, containment boom, sorbent materials, boom anchoring materials, and other supplies are available to sustain response operations to completion. All such equipment must be suitable for use with the primary equipment identified in the response plan. A facility owner or operator is not required to list these response resources, but shall certify their availability.

9.2 A facility owner or operator shall evaluate the availability of adequate temporary storage capacity to sustain the effective daily recovery capacities from equipment identified in the plan. Because of the inefficiencies of oil spill recovery devices, response plans must identify daily storage capacity equivalent to twice the effective daily recovery rate required on scene. This temporary storage capacity may be reduced if a facility owner or operator can demonstrate by waste stream analysis that the efficiencies of the oil recovery devices, ability to decant waste, or the availability of alternative temporary storage or disposal locations will reduce the overall volume of oily material storage requirement.

9.3 A facility owner or operator shall ensure that his or her planning includes the capability to arrange for disposal of recovered oil products. Specific disposal procedures will be addressed in the applicable ACP.

Table 1—Response Resource Operating Criteria Oil Recovery Devices

Operating environment	Significant wave height[1]	Sea State
Rivers and Canals	≤1 Foot	1
Inland	≤3 feet	2
Great Lakes	≤4 feet	2–3
Ocean	≤6 feet	3–4

BOOM				
	Use			
Boom property	Rivers and canals	Inland	Great Lakes	Ocean
Significant Wave Height[1]	≤1	≤3	≤4	≤6
Sea State	1	2	2–3	3–4
Boom height—in. (draft plus freeboard)	6–18	18–42	18–42	≤42
Reserve Buoyancy to Weight Ratio	2:1	2:1	2:1	3:1 to 4:1
Total Tensile Strength—lbs.	4,500	15–20,000	15–20,000	≤20,000
Skirt Fabric Tensile Strength—lbs	200	300	300	500
Skirt Fabric Tear Strength—lbs	100	100	100	125

[1]Oil recovery devices and boom must be at least capable of operating in wave heights up to and including the values listed in Table 1 for each operating environment.

Table 2—Removal Capacity Planning Table

Spill location	Rivers and canals	Nearshore/inland Great Lakes	Offshore
Sustainability of on-water			

oil recovery	3 Days			4 Days			6 Days		
Oil group	% Natural dissipation	% Recovered floating oil	% Oil on shore	% Natural dissipation	% Recovered floating oil	% Oil on shore	% Natural dissipation	% Recovered floating oil	% Oil on shore
1 Non-persistent oils	80	10	10	80	20	10	95	5	/
2 Light crudes	40	15	45	50	50	30	75	25	5
3 Medium crudes and fuels	20	15	65	30	50	50	60	40	20
4 Heavy crudes and fuels	5	20	75	10	50	70	50	40	30

Table 3—Emulsification Factors for Petroleum Oil Groups

Non-Persistent Oil:	
Group I	1.0
Persistent Oil:	
Group II	1.8
Group III	2.0
Group IV	1.4

Table 4—On Water Oil Recovery Resource Mobilization Factors

Operating Area	Tier 1	Tier 2	Tier 3
Rivers & Canals	.30	.40	.60
Inland/Nearshore/Great Lakes	.15	.25	.40
Offshore	.10	.165	.21

Note: These mobilization factors are for total response resources mobilized, not incremental response resources.

Table 5—Response Capability Caps by Operating Area

	Tier 1	Tier 2	Tier 3
February 18, 1993:			
All except rivers and canals, Great Lakes	10K bbls/day	20K bbls/day	40K bbls/day/
Great Lakes	5K bbls/day	10K bbls/day	20K bbls/day.
Rivers and canals	1,500 bbls/day	3,000 bbls/day	6,000 bbls/day.
February 18, 1998:			
All except rivers and canals, Great Lakes	12.5K bbls/day	25K bbls/day	50K bbls/day.
Great Lakes	6.25K bbls/day	12.3K bbls/day	25K bbls/day.

Rivers and canals	1,875 bbls/day	3,750 bbls/day	7,500 bbls/day.
February 18, 2003:			
All except rivers & canals & Great Lakes	12.5K bbls/day	25K bbls/day	50K bbls/day.
Great Lakes	6.25K bbls/day	12.3K bbls/day	25K bbls/day.
Rivers & canals	1,875 bbls/day	3,750 bbls/day	7,500 bbls/day.

Note: The caps show cumulative overall effective daily recovery capacity, not incremental increases.

TBD=To be determined.

[CGD 91–036, 61 FR 7933, Feb. 29, 1996, as amended by CGD 96–026, 61 FR 33666, June 28, 1996; USCG–1999–5151, 64 FR 67175, Dec. 1, 1999; USCG–2000–7223, 65 FR 40058, June 29, 2000; USCG–2005–21531, 70 FR 36349, June 23, 2005; USCG–2001–8661, 74 FR 45025, Aug. 31, 2009; USCG–2010–0351, 75 FR 36284, June 25, 2010]

Appendix D to Part 154—Training Elements for Oil Spill Response Plans

top

1. General

1.1 The portion of the plan dealing with training is one of the key elements of a response plan. This concept is clearly expressed by the fact that Congress, in writing OPA 90, specifically included training as one of the sections required in a vessel or facility response plan. In reviewing submitted response plans, it has been noted that the plans often do not provide sufficient information in the training section of the plan for either the user or the reviewer of the plan. In some cases, plans simply state that the crew and others will be trained in their duties and responsibilities, with no other information being provided. In other plans, information is simply given that required parties will receive the necessary worker safety training (HAZWOPER).

1.2 The training section of the plan need not be a detailed course syllabus, but it must contain sufficient information to allow the user and reviewer (or evaluator) to have an understanding of those areas that are believed to be critical. Plans should identify key skill areas and the training that is required to ensure that the individual identified will be capable of performing the duties prescribed to them. It should also describe how the training will be delivered to the various personnel. Further, this section of the plan must work in harmony with those sections of the plan dealing with exercises, the spill management team, and the qualified individual.

1.3 The material in this appendix D is not all-inclusive and is provided for guidance only.

2. Elements To Be Addressed

2.1 To assist in the preparation of the training section of a facility response plan, some of the key elements that should be addressed are indicated in the following sections. Again, while it is not necessary that the comprehensive training program for the company be included in the response plan, it is necessary for the plan to convey the elements that define the program as appropriate.

2.2 An effective spill response training program should consider and address the following:

2.2.1 Notification requirements and procedures.

2.2.2 Communication system(s) used for the notifications.

2.2.3 Procedures to mitigate or prevent any discharge or a substantial threat of a discharge of oil resulting from failure of manifold, mechanical loading arm, or other transfer equipment or hoses, as appropriate;

2.2.3.1 Tank overfill;

2.2.3.2 Tank rupture;

2.2.3.3 Piping rupture;

2.2.3.4 Piping leak, both under pressure and not under pressure, if applicable;

2.2.3.5 Explosion or fire;

2.2.3.6 Equipment failure (e.g., pumping system failure, relief valve failure, or other general equipment relevant to operational activities associated with internal or external facility transfers).

2.2.4 Procedures for transferring responsibility for direction of response activities from facility personnel to the spill management team.

2.2.5 Familiarity with the operational capabilities of the contracted oil spill removal organizations and the procedures to notify the activate such organizations.

2.2.6 Familiarity with the contracting and ordering procedures to acquire oil spill removal organization resources.

2.2.7 Familiarity with the ACP(s).

2.2.8 Familiarity with the organizational structures that will be used to manage the response actions.

2.2.9 Responsibilities and duties of the spill management team members in accordance with designated job responsibilities.

2.2.10 Responsibilities and authority of the qualified individual as described in the facility response plan and company response organization.

2.2.11 Responsibilities of designated individuals to initiate a response and supervise response resources.

2.2.12 Actions to take, in accordance with designated job responsibilities, in the event of a transfer system leak, tank overflow, or suspected cargo tank or hull leak.

2.2.13 Information on the cargoes handled by the vessel or facility, including familiarity with—

2.2.13.1 Cargo material safety data sheets;

2.2.13.2 Chemical characteristic of the cargo;

2.2.13.3 Special handling procedures for the cargo;

2.2.13.4 Health and safety hazards associated with the cargo; and

2.2.13.5 Spill and firefighting procedures for cargo.

2.2.14 Occupational Safety and Health Administration requirements for worker health and safety (29 CFR 1910.120).

3. Further Considerations

In drafting the training section of the facility response plan, some further considerations are noted below (these points are raised simply as a reminder):

3.1 The training program should focus on training provided to facility personnel.

3.2 An organization is comprised of individuals, and a training program should be structured to recognize this fact by ensuring that training is tailored to the needs of the individuals involved in the program.

3.3 An owner or operator may identify equivalent work experience which fulfills specific training requirements.

3.4 The training program should include participation in periodic announced and unannounced exercises. This participation should approximate the actual roles and responsibilities of individual specified in the plan.

3.5 Training should be conducted periodically to reinforce the required knowledge and to ensure an adequate degree of preparedness by individuals with responsibilities under the facility response plan.

3.6 Training may be delivered via a number of different means; including classroom sessions, group discussions, video tapes, self-study workbooks, resident training courses, on-the-job training, or other means as deemed appropriate to ensure proper instruction.

3.7 New employees should complete the training program prior to being assigned job responsibilities which require participation in emergency response situations.

4. Conclusion

The information in this appendix is only intended to assist response plan preparers in reviewing the content of and in modifying the training section of their response plans. It may be more comprehensive than is needed for some facilities and not comprehensive enough for others. The Coast Guard expects that plan preparers have determined the training needs of their organizations created by the development of the response plans and the actions identified as necessary to increase the preparedness of the company and its personnel to respond to actual or threatened discharges of oil from their facilities.

[CGD 91–036, 61 FR 7938, Feb. 29, 1996]

Browse Previous | Browse Next

For questions or comments regarding e-CFR editorial content, features, or design, email ecfr@nara.gov.

For questions concerning e-CFR programming and delivery issues, email webteam@gpo.gov.

Section 508 / Accessibility

APPENDIX XV

MSDS INFORMATION

This appendix contains the following:

☒ MSDS for East Storage/Splitter III Facility

❑ Other: _____

❑ Other: _____

Date of Manual Entries into this Appendix	***Comments and/or Content***

❑ If excess material from this Appendix is kept in a file instead of behind this tab, please complete the following:

Name of file: _____

Storage location: _____

Dates covered: _____

Contents: _____

MSDS INCLUDED

- Natural Gasoline
- Diesel
- Lube Oil
- Heat Transfer Fluid – Oil
- Transformer Oil
- Recoverable Oil/Used Oil

Material Safety Data Sheet

Natural Gasoline

VALERO ENERGY CORPORATION
ONE VALERO PLACE
SAN ANTONIO, TX 78221

Emergency Phone Numbers
24 Hour Emergency: 713-923-6641
Chemtrec Emergency: 800-424-9300

General Assistance
General Assistance: 337-565-0116

Section I. Product Identification and Uses

Common/Trade name	**Natural Gasoline**
Synonyms	Gasoline, Casing Head Gasoline
Chemical family	Petroleum Hydrocarbon Saturated Aliphatic Hydrocarbon Natural gasoline is a complex combination of hydrocarbons separated as a liquid from natural gas, liquids and/or natural gas condensates from which ethane, propane, butane and possible pentane have been extracted. It consists of hydrocarbons having carbon numbers predominantly in the range of C5 through C8.
DOT Proper Shipping Name	Natural Gasoline
DOT Hazard Class	DOT CLASS 3: Flammable liquid.
DOT Identification Number/Packaging Group	UN 1257 PG: II
Reportable Quantity	The RQ for: Benzene is 10 lbs. This material contains up to 5% benzene. Hexane is 5000 lbs. This material contains up to 40% hexanes.
Marine Pollutant	No

CAS#	8006-61-9
MSDS Number	502

Section II. Summary of Hazards

Danger! Contains Benzene. Cancer Hazard. Can cause kidney, liver and blood disorders.
May cause irritation to eyes, skin and respiratory system. Avoid liquid, mist and vapor contact. Harmful or fatal if swallowed. Aspiration hazard; can enter lungs and cause damage. May cause irritation or be harmful if inhaled or absorbed through the skin. Extremely flammable liquid. Vapors may explode.

Danger! Product May Contain or Release Hydrogen Sulfide. H2S is a highly toxic, highly flammable gas which can be fatal if inhaled at certain concentrations.

Section III. Hazardous Ingredients

Name	CAS No.	Concentration (%)
1) Benzene	71-43-2	5 Maximum
2) n-Hexane	110-54-3	10-20
3) Hexane (all isomers)	mixture	10-20
4) Pentane	109-66-0	20-40
5) Pentane Isomers	mixture	20-40

Continued on Next Page

Section IV. Physical Data

Boiling point	>300°F
Melting or Solid point	Not applicable
Vapor density	2.7 (Air = 1)
Solubility	Slight
Physical state and appearance	Liquid. (Light Straw Red clear liquid.)
Odor threshold	Not available.
Specific gravity	0.65 @ 60°F
Vapor pressure	12-14 psi @ 100°F
Volatility	Essentially 100%
Evaporation rate	Not available.

Odor	Gasoline
Color	Light straw. Red. Clear liquid

Section V. Fire and Explosion Data

The product is:	Flammable.
Flash points	<0°F
Flammable limits	LOWER: 1.3% UPPER: 7.6%
Auto-ignition temperature	500°F

NFPA:

Basic firefighting procedures:	Flammable Liquid. Use dry chemical, foam or carbon dioxide to extinguish the fire. Consult foam manufacturer for appropriate media, application rates and water/foam ratio. Water can be used to cool fire-exposed containers, structures and to protect personnel. If a leak or spill has not ignited, ventilate area and use water spray to disperse gas or vapor and to protect personnel attempting to stop a leak. Use water to flush spills away from sources of ignition. Do not flush down public sewers.
Fire degradation products	Combustion may produce carbon monoxide, carbon dioxide, sulfur oxides and reactive hydrocarbons (aldehydes, aromatics, etc.).
Flammability	Conditions to Avoid: Heat, sparks, open flame, static electricity or any other potential ignition sources should be avoided. Prevent vapor accumulation. Do not switch load.
Unusual fire and explosion hazards:	Dangerous when exposed to heat or flame. Vapors form flammable or explosive mixtures with air at room temperature. Vapor or gas may spread to distant ignition sources (pilot lights, welding equipment, electrical equipment, etc.) and flash back. Vapors may accumulate in low areas. Vapors may concentrate in confined areas. Flowing product can be ignited by self generated static electricity. Use adequate bonding and grounding to prevent static buildup. Runoff to sewer may cause fire or explosion hazard. Containers may explode in heat of fire. Irritating or toxic substances may be emitted upon thermal decomposition. For fires involving this material, do not enter any enclosed or confined space without proper protective equipment, which may include NIOSH approved self-contained breathing apparatus with full face mask. Clothing, rags or similar organic material contaminated with this product and stored in a closed space may undergo spontaneous combustion. Transfer to and from commonly bonded and grounded containers.

Continued on Next Page

Section VI. Reactivity Information

Stability	The product is stable.
Incompatibility	Avoid strong oxidizing agents (peroxide, dichromate, permanganate, chlorine, etc.), strong acids, caustics and halogens.
Hazardous polymerization	No.

Section VII. Health Hazard Information & Toxicology of Components

Primary routes of entry	Eye or skin contact, Ingestion, Inhalation. Target Organs: Blood forming organs, respiratory system, skin Product Listed as a Carcinogen or Potential Carcinogen by: NTP - Yes* IARC - Yes* OSHA - Yes* Other - Yes (API Studies) *Benzene which may be present in product is considered a carcinogen
TLV	**Benzene** TWA: 1 (ppm) STEL: 5 (ppm) from OSHA [1999] SKIN TWA: 0.5 (ppm) CEIL: 2.5 (ppm) from ACGIH [1999] SKIN TWA: 0.1 (ppm) ST: 1 (ppm) from NIOSH-REL [1999] SKIN IDLH: 500 (ppm) from NIOSH [1999] **n-Hexane** TWA: 500 (ppm) from OSHA-PEL [1999] TWA: 50 (ppm) from ACGIH [1999] TWA: 50 (ppm) from NIOSH-REL [1999] IDLH: 1100 (ppm) [10%LEL] from NIOSH [1999] **Hexane (all isomers)** TWA: 500 (ppm) STEL: 1000 (ppm) from ACGIH [1999] TWA: 100 (ppm) CEIL: 510 (ppm) from NIOSH-REL [1999] **Pentane** TWA: 1000 (ppm) from OSHA-PEL [1999] TWA: 600 (ppm) from ACGIH [1999] TWA: 120 (ppm) CEIL: 610 (ppm) from NIOSH-REL [1999] IDLH: 1500 (ppm) [10% LEL] from NIOSH [1999] Consult local authorities for acceptable exposure limits.
Effects and hazards of eye contact	May cause severe irritation, redness, tearing, blurred vision and conjunctivitis.
Effects and hazards of skin contact	Prolonged or repeated contact may cause moderate irritation, defatting (cracking), redness, itching, inflammation, dermatitis and possible secondary infection. High pressure skin injections are SERIOUS MEDICAL EMERGENCIES. Injury may not appear serious at first. Within a few hours, tissues will become swollen, discolored and extremely painful. See Notes to Physician section.
Effects and hazards of inhalation	Nasal and respiratory tract irritation, central nervous system effects including excitation, euphoria, contracted eye pupils, dizziness, drowsiness, blurred vision, fatigue, nausea, headache, loss of reflexes, tremors, convulsions, seizures, loss of consciousness, coma, respiratory arrest and sudden death could occur as a result of long term and/or high concentration exposure to vapors. May also cause anemia and irregular heart rhythm. Repeated or prolonged exposure may cause behavioral changes.
Effects and hazards of ingestion	This product may be harmful or fatal if swallowed. This product may cause nausea, vomiting, diarrhea and restlessness. DO NOT INDUCE VOMITING. Aspiration into the lungs can cause severe chemical pneumonitis or pulmonary edema/hemorrhage, which can be fatal. May cause gastrointestinal disturbances. Symptoms may include irritation, depression, vomiting and diarrhea. May cause harmful central nervous system effects, similar to those listed under "Inhalation".
Medical conditions aggravated by exposure	Preexisting eye, skin, heart, central nervous system and respiratory disorders may be aggravated by exposure to this product. Impaired kidney, liver and blood disorders may be aggravated by exposure to this product.
Toxicological Information	

Continued on Next Page

BENZENE is considered to be a carcinogen to humans, and may cause adverse health effects following exposure via inhalation, ingestion or dermal or eye contact. Acute inhalation of benzene by rats, mice or rabbits caused narcosis, spontaneous heart contractions (ventricular fibrillation) and death due to respiratory paralysis. Subchronic inhalation of benzene by rats produced decreased white blood cell counts, decreased bone marrow cell activity, increased red blood cell activity and cataracts. In rats, chronic inhalation or oral administration of benzene produced cancers of the liver, mouth and Zymbal gland. Acute inhalation exposure of benzene in humans has caused nerve inflammation (polyneuritis), central nervous system depression and cardiac sensitization. Chronic exposure to benzene has produced anorexia and irreversible injury to the blood forming organs. Effects include aplastic anemia and leukemia. Animal studies have demonstrated testicular effects, alterations in reproductive cycles, chromosomal aberrations, and embryo/fetotoxicity. No birth defects have been shown to occur in pregnant laboratory animals exposed to doses not toxic to the mother.

GASOLINE contains benzene, as well as n-hexane, other aromatics and certain olefins. Gasoline generally acts as an anesthetic and mucous membrane irritant. Inhalation is the most important route of occupational entry. Eye and throat irritation occur in several hours at exposures of 160 to 270 ppm, eye, nose and throat irritation and dizziness occurs at exposures of 500 to 900 ppm in one hour, mild anesthesia occurs in 30 minutes at exposures of 2000 ppm. The threshold for immediate mild toxic effect if 900 to 1000 ppm. There are reports of toxic neuritis after exposure to gasoline. Repeated exposure of laboratory animals to high concentrations of gasoline vapors has caused kidney damage and cancer in rats and cancer in mice. Gasoline was evaluated for genetic activity in assays using microbial cells, cultured mammalian cells and rat bone marrow cells. The results were all negative so gasoline was considered nonmutagenic under these conditions. Overexposure to this product or its components has been suggested as a cause of liver abnormalities in laboratory animals and humans. n-HEXANE can affect the body if it is inhaled, comes in contact with the eyes or skin, or is swallowed. Hexane vapor is a narcotic and a mild upper respiratory irritant. Polyneuropathy (peripheral nerve damage) has been reported to occur in workers exposed to hexane vapors, characterized by progressive weakness and numbness in the extremities, loss of deep tendon reflexes and reduction of motor nerve conduction velocity. Recovery ranges from no recovery to complete recovery depending upon the duration of exposure and severity of nerve damage. Concentrations of 30,000 ppm produced narcosis in mice within 30 to 60 minutes, convulsions and death occurred at 35,000 to 40,000 ppm, and at 64,000 ppm respiratory arrest was produced in 2.5 to 4.5 minutes from the start of exposure. Concentrations up to 8000 ppm produced no anesthesia. In human subjects, 2000 ppm for 10 minutes produced no effects, but 5000 ppm resulted in dizziness and a sensation of giddiness. Other investigators reported slight nausea, headache and irritation of the eyes and throat at 1400 to 1500 ppm. In industrial practice, mild narcotic symptoms such as dizziness have been observed when concentrations exceeded 1000 ppm, but not below 500 ppm.

HYDROGEN SULFIDE can affect the body if it is inhaled or if it comes into contact with the eyes, skin, nose or throat. It can also affect the body if it is swallowed. It is colorless and has the odor of rotten eggs. However, its odor cannot be used as an indication of its presence since one of the first effects of H2S exposure is the loss of the sense of smell. Inhalation of high concentrations of hydrogen sulfide, 1000 to 2000 ppm, may cause coma after a single breath and may be rapidly fatal, convulsions can also occur. Hydrogen sulfide gas is a rapidly acting systemic poison which causes respiratory paralysis with consequent asphyxia at high concentrations (500 to 1000 ppm). A case of polyneuritis and encephalopathy from one day's exposure to a concentration insufficient to cause loss of consciousness has been reported. It irritates the eyes and respiratory tract at lower concentrations (50 to 500 ppm). Pulmonary edema and bronchial pneumonia may follow prolonged exposure at concentrations exceeding 250 ppm. Exposure to concentrations of hydrogen sulfide around 50 ppm for one hour may produce rhinitis, pharyngitis, bronchitis, pneumonitis, acute conjunctivitis with pain, lacrimation and photophobia, in severe form this may progress to keratoconjunctivitis and vesiculation of the corneal epithelium. In lower concentrations, hydrogen sulfide may cause headache, fatigue, irritability, insomnia, and gastrointestinal disturbances, as well as central nervous system disturbances, causing excitation and dizziness. Repeated exposure to hydrogen sulfide results in increased susceptibility, so that eye irritation, cough and systemic effects may result from concentrations previously tolerated without any effect.

PENTANE can affect the body if it is inhaled, comes in contact with the eyes or skin, or is swallowed. The chief effects of inhalation are narcosis and irritation of the respiratory passages. Exposures of 90,000 to 120,000 ppm resulted in narcosis in animals in 5 to 6 minutes, 130,000 ppm was fatal with respiratory arrest occurring within 5 minutes of exposure. Pentane injected subcutaneously in rats produced temporary impairment of liver function and moderate neutropenia. While other aliphatic hydrocarbons produce drowsiness and mild irritation of the eyes and nose in human subjects, no symptoms resulted from exposure to pentane vapor for 10 minutes at 5000 ppm. Chronic exposure to high concentrations may lead to polyneuropathy (peripheral nerve damage), characterized by progressive weakness and numbness in the extremities, loss of deep tendon reflexes and reduction of motor nerve conduction velocity.

Toxicity to animals	LD50: Not available. LC50: Not available.
	Remark No additional remark.

Continued on Next Page

Section VIII. First Aid

Eye contact	Flush immediately with large amounts of water for at least 15 minutes. Eyelids should be held away from the eyeball to ensure thorough rinsing. Seek medical advice if pain or redness continues.
Skin contact	Wash exposed area thoroughly with soap and water. Remove contaminated clothing promptly and launder before reuse. Contaminated leather goods should be discarded. If irritation persists or symptoms described in the MSDS develop, seek medical attention. High pressure skin injections are SERIOUS MEDICAL EMERGENCIES. Get immediate medical attention.
Slight inhalation	Remove to fresh air. If breathing is difficult, ensure clear airway and administer oxygen. If not breathing, apply artificial respiration or cardiopulmonary resuscitation. Keep person warm, quiet and get medical attention.
Slight ingestion	Never give anything by mouth to an unconscious person. DO NOT induce vomiting. Aspiration of material into the lungs due to vomiting can cause chemical pneumonitis which can be fatal. Give vegetable oil or charcoal slurry to retard absorption. If spontaneous vomiting occurs, keep head below hips to prevent aspiration of liquid into lungs and monitor for breathing difficulty. SEEK IMMEDIATE MEDICAL ATTENTION. Keep person warm and quiet.
Notes to Physician	In case of ingestion, gastric lavage with activated charcoal can be used promptly to prevent absorption. Consideration should be given to the use of an intratracheal tube, to prevent aspiration. Irregular heart beat may occur, use of adrenalin is not advisable. Individuals intoxicated by the product should be hospitalized immediately, with acute and continuing attention to neurological and cardiopulmonary function. Positive pressure ventilation may be necessary. After the initial episode, individuals should be followed for changes in blood variables and the delayed appearance of pulmonary edema and chemical pneumonitis. Such patients should be followed for several days or weeks for delayed effects, including bone marrow toxicity, hepatic and renal impairment. Individuals with chronic pulmonary disease will be more seriously impaired, and recovery from inhalation exposure may be complicated. In case of skin injection, prompt debridement of the wound is necessary to minimize necrosis and tissue loss.

Section IX. Precautionary Measures

Respiratory protection	If workplace exposure limits for product or components are exceeded, NIOSH equipment should be worn. Proper respirator selection should be determined by adequately trained personnel, based on the contaminants, the degree of potential exposure and published respiratory protection factors. This equipment should be available for nonroutine and emergency use.
Eye protection	Keep away from eyes. Eye contact can be avoided by wearing safety glasses or chemical splash goggles.
Skin protection	Keep away from skin. Skin contact can be minimized by wearing protective gloves such as neoprene, nitrile-butadiene rubber, etc. and, where necessary, impervious clothing and boots. Leather goods contaminated with this product should be discarded. A source of clean water should be available in the work area for flushing eyes and skin.
Ventilation	Avoid breathing mists and vapor. Use in well ventilated area. In confined space, mechanical ventilation may be necessary to reduce vapor concentrations to levels below the allowable exposure limits.
Storage	Store in tightly closed containers in cool, dry, isolated and well ventilated area away from heat, sources of ignition and incompatible materials. Use non-sparking tools and explosion proof equipment. Ground lines, containers, and other equipment used during product transfer to reduce the possibility of a static induced spark. Do not "switch" load (load into containers which previously contained gasoline or other low flash material) because of possible accumulation of a static charge resulting in a source of ignition. Use good personal hygiene practices. After handling this product, wash hands before eating, drinking, smoking or using toilet facilities.
Precautions	Tanks, vessels or other confined spaces which have contained product should be freed of vapors before entering. The container should be checked to ensure a safe atmosphere before entry. Empty containers may contain toxic, flammable/combustible or explosive residues or vapors. Do not cut, grind, drill, weld or reuse empty containers that contained this product. Do not transfer this product to another container unless the container receiving the product is labeled with proper DOT shipping name, hazard class and other information that describes the product and its hazards.
Spill and leak procedures	If facility or operation has an "oil or hazardous substance contingency plan", activate its procedures. Stay upwind and away from spill. Wear appropriate protective equipment including respiratory protection as conditions warrant. Do not enter or stay in area unless monitoring indicates that it is safe to do so. Isolate hazard area and restrict entry to emergency crew. Extremely flammable. Review Fire and Explosion Hazard Data before proceeding with clean up. Keep all sources of ignition (flames, smoking, flares, etc.) and hot surfaces away from release. Contain spill in smallest possible area. Recover as much product as possible (e.g., by vacuuming). Stop leak if it can be done without risk. Use water spray to disperse vapors. Spilled material may be absorbed by an appropriate absorbent, and then handled in accordance with environmental regulations. Prevent spilled material from entering sewers, storm drains, other unauthorized treatment/drainage systems and natural waterways. Contact fire authorities and appropriate federal, state and local agencies. If spill of any amount is made into or upon navigable waters, the contiguous zone, or adjoining shorelines, contact the National Response Center at 800-424-8802. For highway or railway spills, contact Chemtrec at 800-424-9300.

Continued on Next Page

Waste disposal	Dispose of material in accordance with local, county, state and federal regulations. Contact state and federal regulators to determine whether the material should be classified as a hazardous waste or industrial waste and handled accordingly. Use licensed transporter and disposal facility.

Section X. Regulatory Information

SARA Title III (302, 304, 311, 312)

Section 302/304 Extremely Hazardous Substances

Hydrogen Sulfide

Section 311 Hazard Category

Acute	Chronic	Fire	Pressure	Reactive	Not Applicable
X	X	X			

SARA Title III (313)

Benzene	5%	Maximum
n-Hexane	20%	Maximum

TSCA On the TSCA inventory list.

Canada DSL On the DSL list.

California prop 65 This product contains the following ingredients for which the State of California has found to cause cancer, birth defects or other reproductive harm, which would require a warning under the statute:

Benzene, Toluene.

State Right-to-know Regulations:

Chemical Name:	State Right-to-know:
1) Benzene	CT FL IL MA NJ PA RI MI TN
2) n-Hexane	CT FL IL MA NJ PA RI TN
3) Natural Gasoline	CT FL IL LA MA NJ RI
4) Pentane	MA NJ TN

CERCLA/ SUPERFUND Comprehensive Environmental Response, Compensation, and Liability Act of 1980 (CERCLA) requires notification of the National Response Center of release of quantities of Hazardous Substances equal or greater than the reportable quantities (RQs) in 40 CFR 302.4.

OSHA Hazard Determination This material is hazardous as defined by OSHA's Hazard Communication Standard, 29 CFR 1910.1200.

Protection of Stratospheric ozone: (pursuant to section 611 of the Clean Air Act Amendments of 1990):per 40 CFR part 82, this product does not contain nor was it directly manufactured with any class I or II ozone depleting substances.

Section XI. Labeling Information

Danger! Contains Benzene. Cancer Hazard. Can cause kidney, liver and blood disorders.
May cause irritation to eyes, skin and respiratory system. Avoid liquid, mist and vapor contact. Harmful or fatal if swallowed. Aspiration hazard; can enter lungs and cause damage. May cause irritation or be harmful if inhaled or absorbed through the skin. Extremely flammable liquid. Vapors may explode.

Danger! Product May Contain or Release Hydrogen Sulfide. H2S is a highly toxic, highly flammable gas which can be fatal if inhaled at certain concentrations.

If swallowed, do not induce vomiting, aspiration hazard. Call physician immediately. In case of contact, immediately flush eyes with plenty of water for at least 15 minutes. Wash skin with soap and plenty of water. Product soaked clothing should be removed and laundered before reuse. Read Emergency and First Aid Information section of the MSDS.

Use only in well ventilated locations. Keep away from heat, spark and flames. In case of fire, use water spray, foam, dry chemical or carbon dioxide as described in the Fire and Explosion Hazard Data section of the MSDS. Do not pressurize, cut, weld, braze, solder, drill on or near this container. "Empty" container contains residue (liquid and/or vapor) and may explode in heat of a fire.

For industrial use only. Keep out of reach of children. Failure to use caution may cause serious injury or illness. Never siphon by mouth.

DOT DOT CLASS 3: Flammable liquid.

Continued on Next Page

Disclaimer

Information given herein was compiled from reference materials and other sources believed to be reliable and is offered in good faith. However, the MSDS's accuracy or completeness is not guaranteed by Valero, nor is any responsibility assumed or implied for any loss or damage resulting from inaccuracies or omissions. Conditions of use and suitability of the product for particular uses are beyond our control; all risks of use of the product are therefore assumed by the user and WE EXPRESSLY DISCLAIM ALL WARRANTIES OF EVERY KIND AND NATURE, INCLUDING WARRANTIES OF MERCHANTABILITY AND FITNESS FOR A PARTICULAR PURPOSE IN RESPECT TO THE USE OR SUITABILITY OF THE PRODUCT. Nothing is intended as a recommendation for uses which infringe valid patents or as extending license under valid patents. Appropriate warnings and safe handling procedures should be provided to handlers and users. Alteration of this document is strictly prohibited. Except to the extent required by law, republication or retransmission of this document, in whole or in part, is not permitted.

Date prepared 01/25/2001.

MATERIAL SAFETY DATA SHEET

TENNECO OIL COMPANY
P. O. BOX 2511
HOUSTON, TX 77001

MATERIAL Natural Gasoline
MSDS NO. 312 | DATE 8-85

I. MATERIAL IDENTIFICATION

MATERIAL / TRADE NAME [redacted]

SYNONYMS Casinghead Gasoline

CHEMICAL FAMILY / FORMULA Hydrocarbon

CAS NO. 68425-31-0

24 HOUR EMERGENCY TELEPHONE
TENNECO 713/471-4101
CHEMTREC 800 424-9300

HAZARD RATING*

1	HEALTH
3	FIRE
0	REACTIVITY

0 LEAST 3 HIGH
1 SLIGHT 4 EXTREME
2 MODERATE * NFPA 704

II. INGREDIENTS

COMPOSITION	%	TOXICITY DATA
Natural Gasoline Liquid hydrocarbons separated as a liquid from natural gas consisting primarily of C_5-C_8 hydrocarbons. May also contain Butane (C_4).	100	Ingestion - LD_{50} - 0.5 to 5g/kg

III. PHYSICAL DATA

BOILING POINT, 760mm/Hg	– 58-275°F (14-135°C)	SOLUBILITY IN H_2O, % BY WEIGHT	– Slight
SPECIFIC GRAVITY, H_2O=1	– 0.67 @ 15°C	EVAPORATION RATE, BUTAL ACETATE=1	– Not determined
VAPOR PRESSURE	– 13.5 psia @ 100°F (Reid)		
VAPOR DENSITY, AIR=1	– 3.4		
VOLATILES, % BY VOLUME	– 100		

APPEARANCE AND ODOR Colorless, watery liquid with gasoline odor.

IV FIRE AND EXPLOSION DATA

FLASH POINT AND TEST METHOD	AUTO IGNITION TEMPERATURE	FLAMMABILITY LIMITS IN AIR, % BY VOLUME
0°F (-17°C) TOC	Not determined	LOWER 1.3 UPPER 7.1

EXTINGUISHING MEDIA: Dry chemical, Halon, foam, CO_2. Water may not be effective. Water spray (fog) may be used to cool containers. Water stream may splash and spread flaming liquid.

SPECIAL FIRE FIGHTING PROCEDURES: Flammable liquid. Vapors can readily form explosive mixtures with air. Heavier than air vapors can flow along surfaces to distant ignition sources and flash back. Firefighters should use self-contained breathing equipment in an enclosed area.

UNUSUAL FIRE AND EXPLOSION HAZARDS: Keep away from heat, sources of ignition and oxidizers.

MSDS NO. 312	MATERIAL Natural Gasoline

V. REACTIVITY DATA

STABILITY	HAZARDOUS POLYMERIZATION
[X] STABLE [ ] UNSTABLE	[ ] MAY OCCUR [X] WILL NOT OCCUR

CONDITIONS AND MATERIALS TO AVOID: Keep away from oxidizers, heat and sources of ignition.

HAZARDOUS DECOMPOSITION PRODUCTS: Forms carbon monoxide and carbon dioxide during combustion along with thick black smoke.

VI. OCCUPATIONAL EXPOSURE LIMITS

No specific TLV applies.

ACGIH TLV for motor gasoline which has similar hydrocarbon components is 300 ppm, 8 hr. TWA.

VII. HEALTH INFORMATION

Inhalation causes irritation to upper respiratory tract, central nervous system depression, dizziness, headache, and in extreme cases, coma and respiratory arrest. Irregular heartbeat may also occur.

Vapors can irritate the eyes.

Ingestion can cause irritation of gastronomic tract and produce symptoms similar to inhalation hazards above. Aspiration into the lungs can cause chemical pneumonia and pulmonary edema which can be fatal.

Liquid is defatting to the skin and can cause skin irritation and dermatitis.

VII. EMERGENCY AND FIRST AID PROCEDURES

Skin	- Wash with soap and water immediately after contact. Remove contaminated clothing and launder before reuse.
Eyes	- Flush with large amounts of water for 15 minutes, getting under eyelids. Contact physician if irritation persists.
Inhalation	- Remove to fresh air. Restore breathing if necessary. Administer oxygen if breathing difficulty persists and contact physician for advice.
Ingestion	- Do not induce vomiting. Contact physician immediately for treatment.

IX. EMPLOYEE PROTECTION

RESPIRATORY PROTECTION Use organic vapor cartridge respirator or gas mask for exposures over TLV. Self-contained or air supplied breathing equipment is recommended for exposures over 1000 ppm. Over 13000 ppm is above the lower flammable limits.

PROTECTIVE CLOTHING Chemical goggles should be worn to protect eyes from vapors and splashing. Use neoprene or nitrile gloves and protective clothing to prevent skin contact.

OTHER PROTECTIVE MEASURES
A safety shower and eye wash is recommended in the area of use. Explosion-proof ventilation for local and general purposes should be provided to meet TLV.

X. ENVIRONMENTAL PROTECTION

SPILL CLEAN-UP PROCEDURE Eliminate ignition sources in the area. Contain spill to smallest area possible. Stop leak if safe to do so. Use absorbent materials to soak-up small spills. Recover liquid from large spills for reuse or disposal. Do not allow liquid to enter sewers, drains, or waterways.

WASTE DISPOSAL Waste materials should be disposed of by a licensed solvent disposal company.
Federal, state, and local disposal regulations must be followed.

ENVIRONMENTAL HAZARDS Aquatic toxicity (Fish) TL_m 90 ppm/24 hr.

XI. SPECIAL PRECAUTIONS

Store in closed containers away from heat, oxidizers, and sources of ignition. No smoking in areas of use.

Electrical equipment should be explosion-proof Class I, Group D.

Containers must be electrically grounded or bonded for transfer of liquid.

MSDS NO. 312 | MATERIAL Natural Gasoline

XII. TRANSPORTATION REQUIREMENTS

DOT SHIPPING NAME: Gasoline

DOT I.D. NO.: 1203

DOT CLASSIFICATION: Flammable liquid

UN HAZARD CLASS: UN 1257 (Casinghead Gasoline)

IMCO Class - 3.1

XIII. OTHER REGULATORY CONTROLS

None determined.

THIS INFORMATION RELATES ONLY TO THE SPECIFIC MATERIAL DESIGNATED AND MAY NOT BE VALID FOR SUCH MATERIAL USED IN COMBINATION WITH ANY OTHER MATERIALS OR IN ANY PROCESS. SUCH INFORMATION IS TO THE BEST OF THIS COMPANY'S KNOWLEDGE AND BELIEVED ACCURATE AND RELIABLE AS OF THE DATE INDICATED. HOWEVER, NO REPRESENTATION, WARRANTY OR GUARANTEE IS MADE AS TO ITS ACCURACY, RELIABILTY OR COMPLETENESS. IT IS THE USERS RESPONSIBILITY TO SATISFY HIMSELF AS TO THE SUITABLENESS AND COMPLETENESS OF SUCH INFORMATION FOR HIS OWN PARTICULAR USE.

Tenneco Oil Company
P. O. Box 2511
Houston, TX 77001
A TENNECO COMPANY

DATE PREPARED August, 1985

APPROVED BY E. Wayne Drusch
Tenneco Oil Processing & Marketing
713/757-3113

Diamond Shamrock

A Member of the Ultramar Diamond Shamrock Group of Companies

MATERIAL SAFETY DATA SHEET

1. CHEMICAL PRODUCT AND COMPANY IDENTIFICATION

MSDS NUMBER: M1537

MSDS DATE: 01-31-00

PRODUCT NAME: 14# NATURAL GASOLINE

24 HOUR EMERGENCY PHONE : (210) 979-8346

TRANSPORTATION EMERGENCIES: CALL CHEMTREC AT 1-800-424-9300

MSDS ASSISTANCE: (210) 592-4593

MANUFACTURER'S NAME/ADDRESS:
DIAMOND SHAMROCK REFINING COMPANY, L.P.
P.O BOX 696000
San Antonio, Texas 78269-6000.

CHEMICAL NAME: Natural Gasoline **CAS NUMBER:** 68425-31-0

SYNONYMS/COMMON NAMES : This Material Safety Data Sheet applies to the following product descriptions for Hazard Communication purposes only. Technical specifications vary greatly depending on product and are not reflected in this document. Consult specification sheets for technical information.

Natural gasoline
Condensate gasoline
Gasoline (natural gas), natural
Casinghead gasoline

CHEMICAL FORMULA: C_5-C_8 Hydrocarbons

2. COMPOSITION, INFORMATION ON INGREDIENTS

PRODUCT USE: This product is intended for use as a gasoline motor fuel, or for use in engineered processes. Use in other applications may result in a higher exposures and require additional controls, such as local exhaust ventilation and personal protective equipment.

DESCRIPTION: 14# Natural gasoline is a complex mixture of hydrocarbons from the condensation of natural gas production. Composition varies greatly and includes C5 to C8 hydrocarbons with a boiling range of about 40-250°F. The following is a non-exhaustive list of common components, typical percentage ranges in product, and occupational exposure limits for each.

Component or Material Name	%	CAS Number	ACGIH Limits			OSHA Exposure Limits			
			TLV	STEL	Units	PEL	STEL	C/P*	Units
Natural gasoline	~100	68425-31-0	300	500	ppm	300	500	NA	ppm
Butane	< 3	106-97-8	800	NA	ppm	800	NA	NA	ppm
Pentane	< 32	109-66-0	600	750	ppm	1000	NA	NA	ppm
n-Hexane	< 13	110-54-3	50	NA	ppm	500	NA	NA	ppm
Hexane (other isomers)	< 14	N/A	500	1000	ppm	NA	NA	NA	ppm
Cyclopentane	< 2	287-92-3	600	NA	ppm	NA	NA	NA	ppm
Benzene	< 4	71-43-2	0.5	2.5	ppm	1	5	NA	ppm
Methylcyclohexane	< 1	108-87-2	400	NA	ppm	500	NA	NA	ppm
n-Octane	< 1	115-65-9	300	375	ppm	500	NA	NA	ppm
Toluene	< 1	108-88-3	50	NA	ppm	200	NA	300 (C) 500 (P)	ppm
Heptane	< 3	142-82-5	400	500	ppm	500	NA	NA	ppm
Cyclohexane	< 4	110-82-7	300	NA	ppm	300	NA	NA	ppm

C = Ceiling value which is the concentration that shall not be exceeded during amy part of the working exposure. P = 10 minute peak not to be exceeded more than once per 8-hours.

3. HAZARDS IDENTIFICATION

HEALTH HAZARD DATA:

Exposure to this material can occur through inhalation, skin absorption, and ingestion. The major effect of exposure is central nervous system depression, skin irritation, respiratory tract irritation, eye irritation, and polyneuropathy. Product contains benzene which can cause cancer in humans.

HAZARDS OF COMBUSTION PRODUCTS: Carbon monoxide and carbon dioxide can be found in engine exhaust and other forms of hydrocarbon combustion. Carbon monoxide in moderate

concentrations can cause symptoms of headache, nausea, vomiting, increased cardiac output, and mental confusion. Exposure to higher concentrations of carbon monoxide can cause loss of consciousness, heart damage, brain damage, and/or death. Exposure to high concentrations of carbon dioxide can cause simple asphyxiation by displacing oxygen. Combustion of this and other similar materials should only be carried out in well ventilated areas.

MEDICAL CONDITION GENERALLY AGGRAVATED BY EXPOSURE: Medical conditions which have the same symptoms and effects as those outlined under the health hazard information section can be aggravated by exposure to this product.
MEDICAL LIMITATION: N/A

ROUTES OF EXPOSURE

INHALATION: Irritation of the upper respiratory tract with central nervous system stimulation possibly followed by depression, dizziness, headache, incoordination, anesthesia, coma and respiratory arrest. The threshold for immediate mild toxic effects is reported to be 900-1000 ppm.
SKIN CONTACT: Defatting may occur with continued or prolonged contact. Irritation and burning sensation may occur on exposure to liquid or high vapor phase exposure.
SKIN ABSORPTION: Benzene and n-hexane are absorbed directly through intact skin.
EYE CONTACT: Contact with liquid will cause severe burning sensation with temporary irritation and swelling of lids. Vapors in concentrations of 160-270 ppm in air will irritate the eye.
INGESTION: Irritation of mucous membranes of the throat, esophagus and stomach and may result in nausea and vomiting; depression may occur if absorbed (see Inhalation above). If aspirated, chemical pneumonitis may occur with potentially fatal results.
CARCINOGENICITY STATEMENT:
Gasoline mixtures are not listed as carcinogenic by NTP, OSHA, and ACGIH. Gasoline mixtures are listed as a possible carcinogen by IARC (2B) and NIOSH. Benzene is listed as a confirmed human carcinogen by IARC, NTP, OSHA, NIOSH, and ACGIH.

4. FIRST AID MEASURES

EYES: Immediately flush eyes with large amounts of water for at least 15 minutes holding lids apart to ensure flushing of the entire eye surface. SEEK MEDICAL ATTENTION IMMEDIATELY.
SKIN: Wash contaminated areas with plenty of soap and water. A soothing ointment may be applied to irritated skin after thorough cleansing. Remove contaminated clothing and footwear. SEEK MEDICAL ATTENTION if symptoms result.
INHALATION: Get person out of contaminated area to fresh air. If breathing has stopped, resuscitate and administer oxygen if readily available. **SEEK MEDICAL ATTENTION IMMEDIATELY.**
INGESTION: Never give anything by mouth to an unconscious person. If swallowed, DO NOT induce vomiting. If vomiting occurs spontaneously, keep airway clear. **SEEK MEDICAL ATTENTION IMMEDIATELY.**

NOTES TO PHYSICIAN: Gastric lavage only if large quantity has been ingested. Guard against aspiration into lungs which may result in chemical pneumonititis. Irregular heart beat may occur, use of Adrenaline is not advisable. Treat symptomatically.

5. FIRE AND EXPLOSION DATA

FLASH POINT: <-40°F (Estimated) **AUTOIGNITION TEMPERATURE:** 480°F
FLAMMABLE LIMITS IN AIR: UEL: 7.1%
LEL: 1.3%

EXTINGUISHING MEDIA: Use dry chemical, carbon dioxide, foam or water spray. Water may be ineffective in fighting fires of liquids with low flash points, but water should be used to keep fire-exposed containers cool. If a leak or spill has not ignited, use water spray to disperse the vapors and to protect persons attempting to stop a leak.
SPECIAL FIRE FIGHTING PROCEDURES: Pressure-demand, self-contained breathing apparatus should be provided for fire fighters engaged in activities in the hot zone.
UNUSUAL FIRE AND EXPLOSION HAZARD: Vapors may travel extended distances and flashback with explosive force if ignition sources are present.

6. ACCIDENTAL RELEASE MEASURES

Eliminate all sources of ignition (flames, sparks, heat, electrical equipment, and engines) and remove non-response personnel from the spill area. Contain liquids with earthen dikes or petroleum absorbent materials. Prevent discharges to streams or sewer systems. Control vapors from large spills with fire-fighting foam. Remove liquid with explosion-proof equipment and grounded and bonded suction hoses. Report spills or releases as required to the appropriate local, state, and federal regulatory agencies.

7. HANDLING AND STORAGE INFORMATION

This product is intended for use as engine fuel only. Protect containers against physical damage. Outside, detached, or underground storage is preferred. Separate from oxidizing materials. Store in cool, well ventilated areas of non-combustible construction away from possible sources of ignition (flames, sparks, heat, electrical equipment, and engines). Transfer with explosion-proof equipment and grounded and bonded transfer lines. Consult NFPA 30 and OSHA 1910.106 for specific requirements.

8. EXPOSURE CONTROLS/PERSONAL PROTECTION

VENTILATION REQUIREMENTS: Work in well ventilated areas. Use engineering controls to transfer and store material. Explosion-proof equipment is required. Vapor recovery systems may be required in some areas. Mechanical ventilation is required for confined spaces such as tanks and vessels.

SPECIFIC PERSONAL PROTECTIVE EQUIPMENT

RESPIRATORY: Respiratory protection is normally not required when transferring material in well ventilated areas. When transferring in enclosed areas or at high temperatures, vapors concentrations may warrant use of respiratory equipment. Use NIOSH/MSHA approved respirators following manufacturer's recommendations. Positive pressure supplied air respiratory protection is required for IDLH areas; follow ANSI Z88.2.
EYE: Face shield and goggles or chemical goggles should be worn where splashing is likely.
GLOVES: Impervious gloves such as nitrile gloves should be worn during routine handling of this product.
OTHER CLOTHING AND EQUIPMENT: Standard work clothing is sufficient with good practices. Shoes contaminated with this product that can not be decontaminated should be discarded. Clothing contaminated with this product should be removed, washed in soap and water and dried before reuse. Contaminated clothing should be spread out to dry in a well ventilated area. Shower and eyewash facilities should be accessible.

SPECIAL WORK PRACTICES:
(1) Wear impervious gloves such as nitrile gloves when "dip-sticking storage tanks"
(2) Work up-wind of small spills during clean-up
(3) DO NOT USE THIS PRODUCT as a solvent for cleaning equipment or skin
(4) Store small quantities ONLY in "SAFETY CANS" approved for gasoline storage and labeled "Gasoline"
(5) Allow contaminated rags to completely dry in a well ventilated area before storage.

MONITORING EXPOSURE

BIOLOGICAL: No applicable procedure; breath analysis for hydrocarbons has been suggested. Below are ACGIH Biological Exposure Indices (BEI) monitoring procedures for certain ingredients:

ANALYTE	DETERMINANT	SAMPLING TIME	BEI
Benzene	S-phenylmercapturic acid in urine	End of shift	25 µg/g creatinine
Toluene	Hippuric acid in urine	End of shift	1.6 g/g creatinine
Toluene	Toluene in venous blood	Prior to last shift of week	0.05 mg/L
n-Hexane	2,5-Hexanedione in urine	End of shift	5 mg/g creatinine

PERSONAL/AREA: Both active and passive monitor employing charcoal absorption followed by gas chromatography. A molecular weight of 72.5 has been suggested as the average value to convert the determined weight of hydrocarbons to ppm. Direct reading indicating tubes are available to evaluate short term exposure.

9. PHYSICAL AND CHEMICAL PROPERTIES

APPEARANCE AND ODOR: Clear liquid with characteristic gasoline-like odor.

BOILING RANGE @ 760 mm Hg: 40-250 °F	**VAPOR DENSITY (Air=1):** 3 to 4
MELTING POINT: N/A	**EVAPORATION RATE (BuAc=1):** N/A
VAPOR PRESSURE: 13 psi at 25 °C	**BULK DENSITY:** 5.20-5.25 lbs/gal
SPECIFIC GRAVITY: 0.630 @ 60°F	**% VOLATILES BY VOL.:** 100%
SOLUBILITY IN H20% BY WT.: Insoluble	**pH:** N/A

10. STABILITY AND REACTIVITY INFORMATION

CONDITIONS CONTRIBUTING TO INSTABILITY: Under normal conditions, the material is stable. Avoid sources of ignition such as flames, hot surfaces, electrical or frictional sparks, etc.
INCOMPATIBILITY: Avoid contact with oxidizers, acids, bases, halogens, and metal salts.
HAZARDOUS DECOMPOSITION PRODUCTS: This material at high temperatures may decompose to form carbon monoxide and carbon dioxide.
CONDITIONS CONTRIBUTING TO HAZARDOUS POLYMERIZATION: Material is not known to polymerize.

11. TOXICOLOGICAL INFORMATION

1. ACGIH lists benzene as a human carcinogen with a proposed TLV of 0.5 ppm 8 hour TWA; IARC, NTP and OSHA show sufficient evidence for classifying Benzene as a human carcinogen, see 29 CFR 1910.1028 for current PEL of 1 ppm and specific actions to take. Studies have shown that benzene can induce leukemia at concentrations as low as 1 ppm. Benzene can cause myeloid leukemia, Hodgkin's disease, and lymphomias by inhalation. Significant elevations of chromosomal aberrations have been corroborated among workers exposed to levels at mean concentrations less than 10 ppm. Based on risk assessment studies by Rinsky, an individual inhaling 1 ppm of benzene for 40 years, the odds of benzene-induced leukemic death were 1.7 times higher than those of unexposed workers.
2. N-hexane has been shown to cause polyneuropathy (peripheral nerve damage) after repeated and prolonged exposure; other hexanes show narcotic effects at 1000 ppm and are not metabolized like n-hexane. Other hexane isomers are not metabolized in the same manner as n-hexane and the toxicity is primarily narcotic or neurotoxic.
3. Pentane causes narcosis in very high concentrations. Aspiration of pentane into lungs can produce chemical Pneumonitis and/or pulmonary edema.
4. Cyclopentane vapors causes slight irritation of eyes. Prolonged contact of liquid with skin may cause irritation. Inhalation of vapors at high concentrations causes similar effects to gasoline.
5. n-Heptane is reported to cause slight dizziness in man at 1000ppm. At 5000 ppm it can cause nausea, loss of appetite, and a gasoline taste that can persist for hours.
6. Octane has effects similar to gasoline when high concentrations of vapors are inhaled or aspirated. Contact with eyes will cause irritation. A prolonged exposure of the skin to liquid can cause irritation and cracking.
7. Toluene is a depressant of the human CNS. Exposure above 200 ppm is associated with CNS encephalopathy, headache, depression, lassitude, memory loss, and impaired reaction time.

Increased risk to fetal injury has been observed in pregnant women exposed to levels above 10,000 ppm which may occur if toluene is deliberately concentrated and inhaled.

8. Cyclohexane is irritating to eyes and mucous membranes.
9. May cross the placenta. Alcohol may enhance the toxic effects. Interactions with drugs may occur. Use of stimulants such as epinephrine may cause cardiac arrhythmias.

For more detailed information, contact MSDS Assistance at (210) 592-4593.

12. ECOLOGICAL INFORMATION

For detailed information, contact MSDS Assistance at (210) 592-4593.

13. DISPOSAL CONSIDERATIONS

Clean-up action should be carefully planned and executed. Shipment, storage, and/or disposal of waste materials are regulated and action to handle or dispose of spilled or released materials must meet all applicable local, state and federal rules and regulations. If any question exists, the appropriate agencies should be contacted to assure proper action being taken. Waste product and contaminated material will be considered a hazardous waste if the flash point is less than 140°F requiring disposal at an approved hazardous waste facility.

14. TRANSPORT INFORMATION

DOT PROPER SHIPPING NAME	Gasoline
DOT HAZARD CLASS	3
DOT PACKING GROUP (PG)	II
I.D. NUMBER	UN1203
REQUIRED LABELING	FLAMMABLE LIQUID

15. REGULATORY INFORMATION

TSCA (Toxic Substances Control Act) Inventory
Gasoline is listed in the TSCA inventory.
SARA (Superfund Amendments and Reauthorization Act) TITLE III
This product is reportable under SARA Title III, Sections 311 & 312 as a hazardous substance.
Hazard Categories Applicable under 40 CFR 370.2 (SARA Section 311):

Acute Health	Chronic Health	Pressure	Fire	Reactive
Yes	Yes	No	Yes	No

Components listed under 40 CFR 372.65 (SARA Section 313):
This product does contain chemicals identified as toxic by EPA under 40 CFR Part 372 and is subject to the reporting requirements of this section. The chemicals are:

Chemical Name	CAS #	%
Benzene	71-43-2	< 4
n-hexane	110-54-3	< 13
Toluene	108-82-7	< 1
Cyclohexane	110-82-7	< 4

STATE REGULATIONS:
California Proposition 65: This product contains chemicals known to the State of California to cause cancer, birth defects, or other reproductive harm. These chemicals are : Benzene (cancer), toluene (reproductive effects).

16. OTHER INFORMATION

NFPA (National Fire Protection Association) Hazard Ratings Codes*

Health	Fire	Reactivity	Other
1	4	0	Blank

*Based on "Standard System for the Identification of the Fire Hazards of Materials, NFPA No. 704 M

THIS MATERIAL SAFETY DATA SHEET WAS PREPARED BY ULTRAMAR DIAMOND SHAMROCK CORPORATION IN ACCORDANCE WITH 29 CFR 1910.1200. ALL INFORMATION, RECOMMENDATIONS AND SUGGESTIONS APPEARING HEREIN CONCERNING THIS PRODUCT ARE BASED UPON TESTS AND DATA BELIEVED TO BE RELIABLE, HOWEVER, IT IS THE USER'S RESPONSIBILITY TO DETERMINE THE SAFETY, TOXICITY AND SUITABILITY FOR HIS OWN USE OF THE PRODUCT DESCRIBED HEREIN. SINCE THE ACTUAL USE BY OTHERS IS BEYOND OUR CONTROL, NO GUARANTEE EXPRESSED OR IMPLIED IS MADE BY ULTRAMAR DIAMOND SHAMROCK AS TO THE EFFECTS OF SUCH USE, THE RESULTS TO BE OBTAINED OR THE SAFETY AND TOXICITY OF THE PRODUCT NOR DOES ULTRAMAR DIAMOND SHAMROCK ASSUME ANY LIABILITY ARISING OUT OF USE BY OTHERS OF THE PRODUCT REFERRED TO HEREIN. NOR IS THE INFORMATION HEREIN TO BE CONSTRUED AS ABSOLUTELY COMPLETE SINCE ADDITIONAL INFORMATION MAY BE NECESSARY OR DESIRABLE WHEN PARTICULAR OR EXCEPTIONAL CONDITIONS OR CIRCUMSTANCES EXIST OR BECAUSE OF APPLICABLE LAWS OR GOVERNMENT REGULATIONS.

Definitions of Material Safety Data Sheet Terminology

GOVERNMENT AGENCIES AND PRIVATE ASSOCIATIONS

ACGIH - American Conference of Governmental Industrial Hygienists, (private association)
DOT - United States Department of Transportation
EPA - United States Environmental Protection Agency
IARC - International Agency for Research on Cancer, (private association)
NFPA - National Fire Protection Association, (private association)
MSHA - Mine Safety and Health Administration, U.S. Department of Labor
NIOSH - National Institute of Occupational Safety and Health, U.S. Department of Health and Human Services
NTP - National Toxicology Program, (private association)
OSHA - Occupational Safety and Health Administration, U.S. Department of Labor

HAZARD AND EXPOSURE INFORMATION

Acute Hazard - An adverse health effect which occurs rapidly as a result of short term exposure.
CAS # - American Chemical Society's Chemical Abstract service registry number which identifies the product and/or ingredients.
Ceiling - The concentration that should not be exceeded during any part of the working exposure **Chronic Hazard** - An adverse health effect which generally occurs as a result of long term exposure or short term exposure with delayed health effects and is of long duration
Fire Hazard - A material that poses a physical hazard by being flammable, combustible, phyrophoric or an oxidizer as defined by 29 CFR 1910.1200
Hazard Class - DOT hazard classification
Hazardous Ingredients - Names of ingredients which have been identified as health hazards
IDLH- Immediately Dangerous to Life and Health, the airborne concentration below which a person can escape without respiratory protection and exposure up to 30 minutes, and not suffer debilitating or irreversible health effects. Established by NIOSH.
mg/m^3 - Milligrams of contaminant per cubic meter of air, a mass to volume ratio
N/A - Not available or no relevant information found **NA** - Not applicable
PEL - OSHA permissible exposure limit; an action level of one half this value may be applicable
ppm - Part per million (one volume of vapor or gas in one million volumes of air)
Pressure Hazard - A material that poses a physical hazard due to the potential of a sudden release of pressure such as explosive or a compressed gas as defined by 29 CFR 1910.1200
Reactive Hazard - A material that poses a physical hazard due to the potential to become unstable reactive, water reactive or that is an organic peroxide as defined by 29 CFR 1910.1200.
STEL - The ACGIH Short-Term Exposure Limit, a 15-minute Time-Weighted Average exposure which should not be exceeded at any time during a workday, even if the 8-hour TWA is less than the TLV.
TLV - ACGIH Threshold Limit Value, represented herein as an 8-hour TWA concentration.
8-hour TWA - The time weighted average concentration for a normal 8-hour workday and a 40-hour workweek, to which nearly all workers may be repeatedly exposed, day after day, without adverse effect.

ConocoPhillips

MATERIAL SAFETY DATA SHEET

No. 2 Diesel Fuel

1. PRODUCT AND COMPANY IDENTIFICATION

Product Name:	No. 2 Diesel Fuel
Synonyms:	CARB Diesel TF3; CARB Diesel; CARB Diesel 10% CARB Diesel Ultra Low Sulfur - Dyed and Undyed EPA Low Sulfur Diesel Fuel - Dyed and Undyed EPA Off Road High Sulfur Diesel - Dyed High Sulfur Diesel Fuel; Low Sulfur Diesel Fuel No. 2 Diesel Fuel Oil No. 2 High Sulfur Diesel - Dyed No. 2 Low Sulfur Diesel - Dyed; No. 2 Low Sulfur Diesel - Undyed No. 2 Low Sulfur Distillate No. 2 Ultra Low Sulfur Diesel - Dyed; No. 2 Ultra Low Sulfur Diesel - Undyed Super Diesel Fuel; Super Diesel Fuel II-LS Virgin Diesel Fuel; No. 2 Distillate Super Diesel Fuel; Super Diesel Fuel II-LS Virgin Diesel Fuel
Intended Use:	Fuel
Chemical Family:	Petroleum Hydrocarbon
Responsible Party:	ConocoPhillips 600 N. Dairy Ashford Houston, Texas 77079-1175
MSDS Information:	800-762-0942 MSDS@conocophillips.com
Customer Service:	800-527-5476
Technical Information:	800-527-5476

Emergency Overview

24 Hour Emergency Telephone Numbers:
Spill, Leak, Fire or Accident Call CHEMTREC:
North America: (800) 424-9300
Others: (703) 527-3887 (collect)

California Poison Control System: (800) 356-3219

Health Hazards/Precautionary Measures: Causes skin irritation. Aspiration hazard if swallowed. Can enter lungs and cause damage. Use with ventilation adequate to keep exposure below recommended limits, if any. Avoid contact with eyes, skin and clothing. Do not taste or swallow. Wash thoroughly after handling.

Physical Hazards/Precautionary Measures: Flammable liquid and vapor. Keep away from heat, sparks, flames, static electricity or other sources of ignition.

Appearance:	Straw colored to dyed red
Physical Form:	Liquid
Odor:	Diesel fuel

NFPA 704 Hazard Class:

Health:	1 (Slight)
Flammability:	2 (Moderate)
Instability:	0 (Least)

2. COMPOSITION / INFORMATION ON INGREDIENTS

HAZARDOUS COMPONENTS					
Component / CAS No:	Concentration (wt %)	ACGIH:	OSHA:	NIOSH:	Other:
Diesel Fuel No. 2 68476-34-6	100	100 mg/m³ TWA-SKIN	NE	NE	—
Naphthalene 91-20-3	<1	10 ppm TWA 52 mg/m³ TWA 15 ppm STEL 79 mg/m³ STEL	10 ppm TWA 50 mg/m³ TWA	250 ppm IDLH	—

Note: State, local or other agencies or advisory groups may have established more stringent limits. Consult an industrial hygienist or similar professional, or your local agencies, for further information.

1%=10,000 PPM.
NE=Not Established

3. HAZARDS IDENTIFICATION

Potential Health Effects

Eye: Contact may cause mild eye irritation including stinging, watering, and redness.

Skin: Mild to moderate skin irritant. Contact may cause redness, itching, burning, and skin damage. Prolonged or repeated contact may cause drying and cracking of the skin, dermatitis (inflammation), burns, and severe skin damage. No harmful effects from skin absorption have been reported.

Inhalation (Breathing): No information available. Studies by other exposure routes suggest a low degree of toxicity by inhalation.

Ingestion (Swallowing): Low degree of toxicity by ingestion. ASPIRATION HAZARD - This material can enter lungs during swallowing or vomiting and cause lung inflammation and damage.

Signs and Symptoms: Effects of overexposure may include irritation of the respiratory tract, irritation of the digestive tract, nausea, diarrhea, transient excitation followed by signs of nervous system depression (e.g., headache, drowsiness, dizziness, loss of coordination, disorientation and fatigue).

Cancer: There is inadequate information to evaluate the cancer hazard of this material. See Section 11 for information on the individual components, if any.

Target Organs: Inadequate evidence available for this material. See Section 11 for target-organ toxicity information of individual components, if any.

Developmental: Inadequate data available for this material.

Pre-Existing Medical Conditions: Conditions aggravated by exposure may include skin disorders.

4. FIRST AID MEASURES

Eye: If irritation or redness develops, move victim away from exposure and into fresh air. Flush eyes with clean water. If symptoms persist, seek medical attention.

Skin: Remove contaminated shoes and clothing, and flush affected area(s) with large amounts of water. If skin surface is damaged, apply a clean dressing and seek medical attention. If skin surface is not damaged, cleanse affected area(s) thoroughly by washing with mild soap and water. If irritation or redness develops, seek medical attention.

Inhalation (Breathing): If respiratory symptoms develop, move victim away from source of exposure and into fresh air. If symptoms persist, seek medical attention. If victim is not breathing, clear airway and immediately begin artificial respiration. If breathing difficulties develop, oxygen should be administered by qualified personnel. Seek immediate medical attention.

Ingestion (Swallowing): Aspiration hazard: Do not induce vomiting or give anything by mouth because this material can enter the lungs and cause severe lung damage. If victim is drowsy or unconscious and vomiting, place on the left side with the head down. If possible, do not leave victim unattended and observe closely for adequacy of breathing. Seek medical attention.

5. FIRE-FIGHTING MEASURES

Flammable Properties:

Flash Point:	125-180°F / 52-82°C
Test Method:	Pensky-Martens Closed Cup (PMCC), ASTM D93, EPA 1010
OSHA Flammability Class:	Combustible liquid
LEL%:	0.3
UEL%:	10.0
Autoignition Temperature:	500°F / 260°C

Unusual Fire & Explosion Hazards: This material is flammable and can be ignited by heat, sparks, flames, or other sources of ignition (e.g., static electricity, pilot lights, or mechanical/electrical equipment, and electronic devices such as cell phones, computers, calculators, and pagers which have not been certified as intrinsically safe). Vapors may travel considerable distances to a source of ignition where they can ignite, flash back, or explode. May create vapor/air explosion hazard indoors, in confined spaces, outdoors, or in sewers. Vapors are heavier than air and can accumulate in low areas. If container is not properly cooled, it can rupture in the heat of a fire.

Extinguishing Media: Dry chemical, carbon dioxide, or foam is recommended. Water spray is recommended to cool or protect exposed materials or structures. Carbon dioxide can displace oxygen. Use caution when applying carbon dioxide in confined spaces. Water may be ineffective for extinguishment, unless used under favorable conditions by experienced fire fighters.

Fire Fighting Instructions: For fires beyond the incipient stage, emergency responders in the immediate hazard area should wear bunker gear. When the potential chemical hazard is unknown, in enclosed or confined spaces, or when explicitly required by DOT, a self contained breathing apparatus should be worn. In addition, wear other appropriate protective equipment as conditions warrant (see Section 8).

Isolate immediate hazard area, keep unauthorized personnel out. Stop spill/release if it can be done with minimal risk. Move undamaged containers from immediate hazard area if it can be done with minimal risk.

Water spray may be useful in minimizing or dispersing vapors and to protect personnel. Cool equipment exposed to fire with water, if it can be done with minimal risk. Avoid spreading burning liquid with water used for cooling purposes.

6. ACCIDENTAL RELEASE MEASURES

Flammable. Keep all sources of ignition and hot metal surfaces away from spill/release. The use of explosion-proof electrical equipment is recommended.

Stay upwind and away from spill/release. Notify persons down wind of the spill/release, isolate immediate hazard area and keep unauthorized personnel out. Stop spill/release if it can be done with minimal risk. Wear appropriate protective equipment including respiratory protection as conditions warrant (see Section 8).

Prevent spilled material from entering sewers, storm drains, other unauthorized drainage systems, and natural waterways. Dike far ahead of spill for later recovery or disposal. Use foam on spills to minimize vapors (see Section 5). Spilled material may be absorbed into an appropriate absorbent material.

Notify fire authorities and appropriate federal, state, and local agencies. Immediate cleanup of any spill is recommended. If spill of any amount is made into or upon navigable waters, the contiguous zone, or adjoining shorelines, notify the National Response Center (phone number 800-424-8802).

7. HANDLING AND STORAGE

Handling: Open container slowly to relieve any pressure. Bond and ground all equipment when transferring from one vessel to another. Can accumulate static charge by flow or agitation. Can be ignited by static discharge. The use of explosion-proof electrical equipment is recommended and may be required (see appropriate fire codes). Refer to NFPA-704 and/or API RP 2003 for specific bonding/grounding requirements.

Do not enter confined spaces such as tanks or pits without following proper entry procedures such as ASTM D-4276 and 29CFR 1910.146. The use of appropriate respiratory protection is advised when concentrations exceed any established exposure limits (see Sections 2 and 8).

Do not wear contaminated clothing or shoes. Keep contaminated clothing away from sources of ignition such as sparks or open flames. Use good personal hygiene practices.

"Empty" containers retain residue and may be dangerous. Do not pressurize, cut, weld, braze, solder, drill, grind, or expose such containers to heat, flame, sparks, or other sources of ignition. They may explode and cause injury or death. "Empty" drums should be completely drained, properly bunged, and promptly shipped to the supplier or a drum reconditioner. All containers should be disposed of in an environmentally safe manner and in accordance with governmental regulations.

Before working on or in tanks which contain or have contained this material, refer to OSHA regulations, ANSI Z49.1, and other references pertaining to cleaning, repairing, welding, or other contemplated operations.

Storage: Keep container(s) tightly closed. Use and store this material in cool, dry, well-ventilated areas away from heat, direct sunlight, hot metal surfaces, and all sources of ignition. Post area "No Smoking or Open Flame." Store only in approved containers. Keep away from any incompatible material (see Section 10). Protect container(s) against physical damage. Outdoor or detached storage is preferred. Indoor storage should meet OSHA standards and appropriate fire codes.

8. EXPOSURE CONTROLS / PERSONAL PROTECTION

Engineering controls: If current ventilation practices are not adequate to maintain airborne concentrations below the established exposure limits (see Section 2), additional engineering controls may be required. Where explosive mixtures may be present, electrical systems safe for such locations must be used (see appropriate electrical codes).

Personal Protective Equipment (PPE):

Respiratory: A NIOSH certified air purifying respirator with an organic vapor cartridge may be used under conditions where airborne concentrations are expected to exceed exposure limits (see Section 2).

Protection provided by air purifying respirators is limited (see manufacturer's respirator selection guide). Use a NIOSH approved self-contained breathing apparatus (SCBA) or equivalent operated in a pressure demand or other positive pressure mode if there is potential for an uncontrolled release, exposure levels are not known, or any other circumstances where air purifying respirators may not provide adequate protection.

A respiratory protection program that meets OSHA's 29 CFR 1910.134 and ANSI Z88.2 requirements must be followed whenever workplace conditions warrant a respirator's use.

Skin: The use of gloves impervious to the specific material handled is advised to prevent skin contact, possible irritation, and skin damage. Examples of approved materials are nitrile or Viton® (see glove manufacturer literature for information on permeability). Depending on conditions of use, apron and/or arm covers may be necessary.

Eye/Face: Approved eye protection to safeguard against potential eye contact, irritation, or injury is recommended. Depending on conditions of use, a face shield may be necessary.

Other Protective Equipment: Eye wash and quick-drench shower facilities should be available in the work area. Thoroughly clean shoes and wash contaminated clothing before reuse. It is recommended that impervious clothing be worn when skin contact is possible.

Suggestions for the use of specific protective materials are based on readily available published data. Users should check with specific manufacturers to confirm the performance of their products.

9. PHYSICAL AND CHEMICAL PROPERTIES

Note: Unless otherwise stated, values are determined at 20°C (68°F) and 760 mm Hg (1 atm).

9. PHYSICAL AND CHEMICAL PROPERTIES

Appearance:	Straw colored to dyed red
Physical Form:	Liquid
Odor:	Diesel fuel
Odor Threshold:	No data
pH:	Not applicable
Vapor Pressure (mm Hg):	0.40
Vapor Density (air=1):	> 3
Boiling Point:	300-690°F / 149-366°C
Solubility in Water:	Negligible
Partition Coefficient (n-octanol/water) (Kow):	No data
Specific Gravity:	0.81-0.88@ 60°F (15.6°C)
Bulk Density:	7.08 lbs/gal
Viscosity cSt @ 40°C:	1.7-4.1
Percent Volatile:	Negligible@ ambient conditions
Evaporation Rate (nBuAc=1):	<1
Flash Point:	125-180°F / 52-82°C
Test Method:	Pensky-Martens Closed Cup (PMCC), ASTM D93, EPA 1010
LEL%:	0.3
UEL%:	10.0
Autoignition Temperature:	500°F / 260°C

10. STABILITY AND REACTIVITY

Stability: Stable under normal ambient and anticipated storage and handling conditions of temperature and pressure. Flammable liquid and vapor. Vapor can cause flash fire.

Conditions to Avoid: Avoid all possible sources of ignition (see Sections 5 and 7).

Materials to Avoid (Incompatible Materials): Avoid contact with strong oxidants such as liquid chlorine, concentrated oxygen, sodium hypochlorite, calcium hypochlorite, etc.

Hazardous Decomposition Products: Combustion can yield carbon, nitrogen and sulfur oxides. The use of hydrocarbon fuel in an area without adequate ventilation may result in hazardous levels of combustion products (e.g., oxides of carbon, sulfur and nitrogen, benzene and other hydrocarbons) and/or dangerously low oxygen levels. See Section 11 for additional information on hazards of engine exhaust. IARC has classified Diesel exhaust as probably carcinogenic in humans.

Hazardous Polymerization: Will not occur.

11. TOXICOLOGICAL INFORMATION

Chronic Data:

Diesel Fuel No. 2 (68476-34-6)

Carcinogenicity: Petroleum middle distillates have been shown to cause skin tumors in mice following repeated and prolonged skin contact. Follow-up studies have shown that these tumors are produced through a non-genotoxic mechanism associated with frequent cell damage and repair, and that they are not likely to cause tumors in the absence of prolonged skin irritation. Animal studies have also shown that washing the skin with soap and water can reduce the tumor response. Middle distillates with low polynuclear aromatic hydrocarbon content have not been identified as a carcinogen by NTP, IARC or OSHA.

Target Organs: Limited evidence of renal impairment has been noted from a few older case reports involving excessive exposure to diesel fuel No. 2. However, renal toxicity has not been demonstrated to be a consistent finding of diesel fuel exposure.

Naphthalene (91-20-3)

Carcinogenicity: Naphthalene has been evaluated in two year inhalation studies in both rats and mice. The National Toxicology Program (NTP) concluded that there is clear evidence of carcinogenicity in male and female rats based on increased incidences of respiratory epithelial adenomas and olfactory epithelial neuroblastomas of the nose. NTP found some evidence of carcinogenicity in female mice (alveolar adenomas) and no evidence of carcinogenicity in male mice. Naphthalene has been identified as a carcinogen by IARC and NTP.

Acute Data:

Diesel Fuel No. 2 (68476-34-6)
Dermal LD50= >5ml/kg (Rabbit)
LC50= No data available
Oral LD50= 9 ml/kg (Rat)

Naphthalene (91-20-3)
Dermal LD50= >2.5 g/kg (rat)
LC50= >340 mg/m^3/1H (rat)
Oral LD50= 490 mg/kg; 2.6 g/kg (rat)

12. ECOLOGICAL INFORMATION

When middle distillate hydrocarbons escape into the environment due to leaks or spills, most of their constituent hydrocarbons will evaporate and be photodegraded by reaction with hydroxyl radicals in the atmosphere. The half-lives in air for many of the individual hydrocarbons is less than one day. Less volatile hydrocarbons can persist in the aqueous environment for longer periods. They remain floating on the surface of the water; those that reach soil or sediment biodegrade relatively slowly. Soil contaminated with middle distillates can develop adapted microbial species able to use the fuel as a carbon source; soil aeration and nutrient supplementation can enhance this biodegradation.

Reported LC50/EC50 values for water-soluble fractions of middle distillates are usually in the range of 10 to 100 mg/liter. Adverse effects on the gills, pseudobranch, kidney and nasal mucosa have been reported in fish involved in spills of middle distillates. Juvenile clams may be particularly sensitive to marine sediments contaminated as a result of spilled material. Direct toxicity and fouling of sea birds can occur if birds dive through floating layers of spilled material.

Phytotoxic effects of middle distillate hydrocarbons have been reported following exposure of plants to sprays or vapors. Lack of seed germination and inhibition of seedling growth may also occur. There is evidence for moderate bioaccumulation of the water-soluble hydrocarbons present in middle distillates.

13. DISPOSAL CONSIDERATIONS

This material, if discarded as produced, is not a RCRA "listed" hazardous waste. However, it should be fully characterized for ignitability (D001) and benzene (D018) prior to disposal (40 CFR 261). Use which results in chemical or physical change or contamination may subject it to regulation as a hazardous waste. Along with properly characterizing all waste materials, consult state and local regulations regarding the proper disposal of this material.

Container contents should be completely used and containers should be emptied prior to discard. Container rinsate could be considered a RCRA hazardous waste and must be disposed of with care and in full compliance with federal, state and local regulations. Larger empty containers, such as drums, should be returned to the distributor or to a drum reconditioner. To assure proper disposal of smaller empty containers, consult with state and local regulations and disposal authorities.

14. TRANSPORT INFORMATION

DOT

Shipping Description: Diesel Fuel, Combustible liquid, NA1993, III
Non-Bulk Package Marking: Not regulated in non-bulk quantities
Non-Bulk Package Labeling: Not regulated in non-bulk quantities
Bulk Package/Placard Marking: Combustible/1993
Packaging - References (Exceptions, Non-Bulk, Bulk): 49 CFR 173.150(f), 173.203, 173.241
Hazardous Substance: None
Emergency Response Guide: 128
Note: This product has been reclassified as a Combustible Liquid for domestic land transportation using 49 CFR 173.150(f).

IMDG

Shipping Description: UN1202, Diesel fuel, 3, III (52°C)
Non-Bulk Package Marking: Diesel fuel, UN1202

14. TRANSPORT INFORMATION

Labels: Flammable
Placards/Marking (Bulk): Flammable/1202
Packaging - Non-Bulk: P001, LP01
EMS: F-E, S-E

ICAO/IATA

UN/ID #: UN1202
Proper Shipping Name: Diesel fuel
Hazard Class/Division: 3
Packing Group: III
Subsidiary risk: None
Non-Bulk Package Marking: Diesel fuel, UN1202
Labels: Flammable

	LTD. QTY.	Passenger Aircraft	Cargo Aircraft Only
Packaging Instruction #:	Y309	309	310
Max. Net Qty. Per Package:	10 L	60 L	220 L

15. REGULATORY INFORMATION

U.S. Regulations:

EPA SARA 311/312 (Title III Hazard Categories)

Acute Health:	Yes
Chronic Health:	No
Fire Hazard:	Yes
Pressure Hazard:	No
Reactive Hazard:	No

SARA - Section 313 and 40 CFR 372:
This material contains the following chemicals subject to the reporting requirements of SARA 313 and 40 CFR 372:
Naphthalene.....91-20-3.....<1%

EPA (CERCLA) Reportable Quantity (in pounds):
EPA's Petroleum Exclusion applies to this material - (CERCLA 101(14)).

CERCLA/SARA - Section 302 Extremely Hazardous Substances and TPQs (in pounds):
This material contains the following chemicals subject to the reporting requirements of SARA 302 and 40 CFR 372:
-- None Known --

California Proposition 65:
Warning: This material contains the following chemicals which are known to the State of California to cause cancer, birth defects or other reproductive harm, and are subject to the requirements of California Proposition 65 (CA Health & Safety Code Section 25249.5):
Benzene -- Cancer, Developmental and Reproductive Toxicant
Naphthalene -- Cancer
Toluene -- Developmental Toxicant

Diesel engine exhaust, while not a component of this material, is on the Proposition 65 list of chemicals known to the State of California to cause cancer.

Carcinogen Identification:
This material has not been identified as a carcinogen by NTP, IARC, or OSHA. See Section 11 for carcinogenicity information of individual components, if any.

Diesel exhaust is a probable cancer hazard based on tests in laboratory animals. It has been identified as a carcinogen by IARC.

TSCA:
All components are listed on the TSCA inventory.

International Regulations:

Canadian Regulations:
This product has been classified in accordance with the hazard criteria of the Controlled Products Regulations (CPR) and the MSDS contains all the information required by the CPR.

Domestic Substances List: Listed
WHMIS Hazard Class:
B2 - Flammable Liquids
D2B - Materials Causing Other Toxic Effects - Toxic Material

16. OTHER INFORMATION

Issue Date:	21-Feb-2006
Previous Issue Date:	13-Feb-2003
Product Code:	Multiple
Previous Product Code:	Multiple
Revised Sections or Basis for Revision:	Product Name / Synonyms (Section 1)
MSDS Code:	001847

Disclaimer of Expressed and implied Warranties:
The information presented in this Material Safety Data Sheet is based on data believed to be accurate as of the date this Material Safety Data Sheet was prepared. HOWEVER, NO WARRANTY OF MERCHANTABILITY, FITNESS FOR ANY PARTICULAR PURPOSE, OR ANY OTHER WARRANTY IS EXPRESSED OR IS TO BE IMPLIED REGARDING THE ACCURACY OR COMPLETENESS OF THE INFORMATION PROVIDED ABOVE, THE RESULTS TO BE OBTAINED FROM THE USE OF THIS INFORMATION OR THE PRODUCT, THE SAFETY OF THIS PRODUCT, OR THE HAZARDS RELATED TO ITS USE. No responsibility is assumed for any damage or injury resulting from abnormal use or from any failure to adhere to recommended practices. The information provided above, and the product, are furnished on the condition that the person receiving them shall make their own determination as to the suitability of the product for their particular purpose and on the condition that they assume the risk of their use. In addition, no authorization is given nor implied to practice any patented invention without a license.

Wednesday, February 09, 2011

MONT BELVIEU, TX (KTRK) -- A fire erupted at a petroleum plant east of Houston on Tuesday, sending balls of orange flame and thick black smoke into the sky. One contract worker remains unaccounted for.

Related Photos

Massive fire at refinery facility
View all 34 photos

The Mont Belvieu Police Department says the explosion happened just after noon Tuesday at Enterprise Products on Sun Oil Road.

The search continues for Rick Shaw, 43. Shaw has been working as a contract employee for Turner Industries, according to his brother Mark Shaw.

"We need to confirm if he was in there to begin with and then determine if anyone saw him leave or if anyone saw him not leave," Enterprise spokesperson Rick Rainey said. "That's all a part of what we're trying to find out right now with interviewing other people that were there."

Rainey also said the company has been in contact with the missing worker's family.

"Obviously, we're working in coordination with all the parties involved," he said.

Eight to 10 employees were on site when the explosion occurred, but no injuries were reported.

According to Enterprise, an employee in the control room detected something abnormal shortly before the explosion and began shutting down lines. When the blast happened, the company shut off the rest of the valves and waited for the fire to burn itself out.

The blaze was at Enterprise's west storage facility, not the main facility. That part of the facility stores natural gas liquids. Company officials don't yet know the cause, though they suspect that a rupture in the pipeline caused the blast.

"Until we can get in there and take a look, we really won't know exactly what the source was or what exactly is the extent of the damage," Rainey said.

Steve Mears told us he was working nearby.

"I was just south about 100 yards. At first there was a pop, and a cloud of white mist, then a plume of flames. I noticed some horses running away," said Mears. "I could feel the concussion when it first went off -- bright orange and yellow flames. I was in my car and fired it up and headed to a safe location."

Related Content

More: Images of explosion in Mont Belvieu
raw video: Refinery facility explosion
Video: Son of plant worker discusses fire
More: Got a story idea? Let us know!

Eyewitness Oscar Saenz told us, "Around 12:15pm I heard two loud blows -- like boom, boom," and saw the huge flames at the facility.
Another man we spoke to said he talked with his dad who is a supervisor at the plant.
"He said that there were about eight explosions and everyone was accounted for and it was pretty bad," said Chris Diller.
Chambers County Judge Jimmy Sylvia had advised residents to avoid the area, and authorities shut down nearby streets and a stretch of Highway 146 through Mont Belvieu until the fire was essentially extinguished.
Mont Belvieu City Hall said no evacuation were ordered, though Barbers Hills ISD schools had a modified shelter in place.

In the area beneath Mont Belvieu are salt caverns that make up the world's largest storage site for hydrocarbons. Numerous leaks, explosion and other industrial accidents have occurred in the area's petrochemical plants over the years, including an underground gas leak in 1980 that forced 72 families from their homes for nearly five months.

ABOUT THE FACILITY

According to its website, "Enterprise owns a state of the art gasoline additive production facility that has been modified to produce isooctane, a motor gasoline octane enhancement additive used in reformulated motor gasoline blends to increase octane, and isobutylene." [Company website]

The Associated Press contributed to this report.

(Copyright ©2012 KTRK-TV/DT. All Rights Reserved.)

UNITED STATES ENVIRONMENTAL PROTECTION AGENCY

REGION 6
1445 ROSS AVENUE, SUITE 1200
DALLAS, TX 75202-2733

FRP-06-TX-00625

March 12, 2012

Brenda Gantner
Enterprise Products Operating LLC
316 S. Main
P. O. Box 573
Mont Belvieu, TX 77580-0537

NOTICE OF INSPECTION

Dear Mr. Gantner:

This is to inform you that an inspection will be conducted at the facility(ies) listed below. The purpose of the inspection is to determine your facility's compliance with both the Clean Water Act § 311(j)(CWA), as amended by the Oil Pollution Act of 1990 (OPA), and the Emergency Planning and Community Right To Know Act (EPCRA) of 1986.

Facility	Location	Date/Time of Inspection
East Storage/Splitter III	316 S. Main Mont Belvieu, TX	March 15, 2011 9:00 AM

Scope of the Inspection and Plan Review

The scope of the inspection and plan review process is to validate plan information and determine implementation of the aforementioned requirements. The inspection may include but is not limited to: reviewing and obtaining copies of documents and records; interviews and the taking of statements; review of manufacturing, importing, processing, storage, use, and/or treatment facilities; taking of samples and photographs, a drill/exercise and other inspection activities necessary to determine compliance with the Acts. Please ensure that key response personnel (i.e. Qualified Individual) are available during the inspection and have the following documents available on the date of the inspection: (1) Training Records, (2) Records of tank inspections, (3) Records of secondary containment inspections, (4) Response Equipment Checklists (5) Response Equipment Inspection Logs (6) Response Equipment Testing and Deployment Drill Logs (7) Qualified Individual Notification Drill Logs (8) Spill Management Team Tabletop Drill Logs, and (9) Discharge Prevention Meeting Logs.

Upon completion of the inspection process, your company personnel will be advised as to general compliance issues. Any deficiencies identified shall be addressed and corrected as directed by the EPA inspector. Your facility will have 30 days in which to address all deficiencies. Failure to make required revisions may affect your facility(ies)'s approval status and could result in potential enforcement action.

Please be advised that our inspection team's personal protective equipment (PPE) and inspection equipment generally consist of hard hats, safety gloves, steel-toed boots/shoes, coveralls where applicable, radios, pagers, monotox, GPS units and cameras. If Nomex fire retardant clothing is a necessity or if you have any specific safety related considerations regarding clothing or equipment, please provide notice to EPA prior to the inspection. Further, this document serves as notice that the EPA personnel and representatives have received OSHA training requirements in accordance with 29 CFR 1910.120.

To facilitate the completion and accuracy of the FRP/SPCC Compliance Inspection Report it is necessary for EPA to require that your organization submit, no later than two weeks prior to the inspection date, the following information: 1) latest copy of the Spill Prevention Control and Countermeasure Plan (SPCC), 2) EPCRA Tier II forms, and 3) the appropriate updates to your Facility Response Plan (FRP). Please be advised that this request will allow the Agency to leave a copy of the inspection report with the facility at the time of the inspection. Please submit the required documentation to the following address:

United States Environmental Protection Agency
Attn: Donald P. Smith
P.O. Box 303
Dallas, Texas 75313-0303

If you have any questions regarding this notice, please contact me at (214)665-6489.

Sincerely,

Donald P. Smith
Senior On-Scene Coordinator

U.S. EPA Facility Response Plan (FRP) -- Review Form

I. Facility Information

FRP Number: ***FRP-06-TX-00625***	Facility Name: ***East Storage/Splitter III***	
Facility Owner: ***Enterprise Products Operating LLC***		
Facility Operator (if different from owner):		
Mailing Address: ***316 S. Main, P. O. Box 573***		
City: ***Mont Belvieu***	State: ***TX***	Zip: ***77580-0573***
Telephone: ***281-385-0510***	Fax:	
Latitude: ***29.8380555***	Longitude: ***-94.891111***	
Other Description or Directions:		
Site Location Map Attached (Y/N) : ***N***		

II. Facility Overview

Date of Initial Facility Operation:			6/1/1995		
Total Storage Capacity (bbls/gals):			***105,435,036 gal***		# Of Tanks: ***6***
Worst Case Discharge (bbls/gals):			***15,372 gal***		
Actual Worst Case Discharge (barrels) calculated from Worst Case			#REF!		
Actual Worst Case Discharge (gallons) calculated from Worst Case			#REF!		
Capacity of Largest Above Ground Storage Tank (bbls/gals): ***2,551***					
Name of Affected Waterway(s)/Protected Waterway(s)/Environmentally Sensitive Area (A): ***Smith Gully, Cedar Bayou***					
Distance from Facility:					
Resposne Contractor(s): ***Garner Environmental Services, Inc.***					

Yes	No	
√		Standard Response Plan Cover Sheet Submitted with Plan.
√		Emergency Response Action Plan Submitted with Plan or as Separate Part of Plan.
	√	Facility Response Plan Follows 40 CFR 112 Appendix F Format.

III. FRP Applicability [40 CFR 112.20 (f)(1)]				
√	The facility transfers oil over water to or from vessels and has a total oil storage capacity greater or equal to 42,000 gallons.			
	-OR-			
	The facility's total oil storage is greater than or equal to 1 million gallons, and one of the following is true:			
	The facility does not have secondary containment for each aboveground storage area sufficienty large to contain the capacity of the			
√	The facility is located at a distance such that a discharge from the facility could cause injury to fish and wildlife and sensitive			
	The facility is located at a distance such that a discharge from the facility would shut down a public drinking water intake.			
	The facility has had a reportable spill in an amount greater than or equal to 10,000 gallons with in the last 5 years.			
	Substantial Harm Facility	√	Significant and Substantial Harm Facility	
Reviewed by:	Mike Clonts		Date:	3/15/2012
FRP Status:			Date:	
Approved by:			Date:	

NOTE: The following checklist items correspond to the final regulations as outlined in 40 CFR 112.20, Appendix F. For all checklist items, indicate FRP adequacy as follows:

Facility Response Plan
Plan Review Checklist
For Verifying Compliance with Facility Response Plan Requirements

Activity Information		
Activity Type		FRP Plan Review
Reason for Review		Initial Plan Submittal (new FRP)
		5-year Review
		Plan Amendment (note type)
	√	Other (note other reason)
		Note: ***Pre-inspection review***
Activity Date		3/15/2012
EPA Inspector		***Mike Clonts***

112.20(h)(11)	A. Response Plan Cover Sheet (sec. 2.0)	YES	NO		N/A
	General Information (sec 2.1)				
	Facility name	√			
	Facility address	√			
	Facility telephone number	√			
	Mailing address (if different from facility address)	√			
	Facility owner/operator and address **(recommended)**	√			
	Facility owner telephone **(recommended)**	√			
	Dun & Bradstreet number	√			
	Longitude (degrees, minutes, seconds)	√			
	Latitude (degree, minutes, seconds)	√			
	North American Industrial Classification System (NAICS) code	√			
	Facility start up date **(recommended)**	√			
	Facility acres **(recommended)**	√			
	Name of protected waterway or environmentally sensitive area	√			
	Distance to navigable water	√			
	Worst case discharge amount (gallons)	√			
	Maximum oil storage capacity (gallons)	√			
	Largest aboveground storage tank (AST) capacity (gallons)	√			

	Total number of ASTs	√			
	Total number of underground storage tanks (USTs)				√
	Total UST storage				√
	Total storage of drums and transformers that contain oil				√
	Number of surface impoundments and total storage of surface impoundments				√
	Applicability of Substantial Harm Criteria (sec.2.2)				
	Attachment C-1 with answer to each applicability question	√			
	Documentation of reliability and analytical soundness of alternate formula				√
Please use the following space to note any missing or incomplete information.					
	Certification (sec. 2.3)				
	Plan holder certification is included (contains signature, title, and date)	√			
Please use the following space to note any missing or incomplete information.					
	Verification of Contract (sec. 2.4)				
	Plan holder certification is included (contains signature, title, and date)	√			
Please use the following space to note any missing or incomplete information. *Review of the FRP was conducted in conjunction with the Enterprise, Emergency*					

FRP 06 TX 00525

Enterprise Products Operating LLC, East Storage/Splitter III

112.20(h)(1)	**B. Emergency Response Action Plan (ERAP) (sec. 1.1)**	YES	NO	N/A	N/A
112.20(h)(1)	Separate Section of FRP	√			
112,20(h)(1)(i),	Qualified Individual (QI) Information (sec. 1.2)	√			
112,20(h)(1)(ii),	Emergency Notification List (sec. 1.3.1)	√			
	Spill Response Notification Form (sec. 1.3.1)	√			
112.20(h)(1)(iv)	Response Equipment List and Location (sec. 1.3.2)				√
112.20(h)(1)(iv)	Response Equipment Testing and Deployment (sec. 1.3.4)				√
112.20(h)(1)(v)	Facility Response Team List (sec. 1.3.4)		√		
112.20(h)(1)(vi)	Evacuation Plan (sec. 1.3.5)	√			
112.20(h)(1)(vii)	Immediate Actions (sec. 1.7.1)	√			
112.20(h)(1)(viii)	Facility Diagrams (sec. 1.9)	√			
	*The sections above should be extracted from the more detailed corresponding sections of the plan.				
Please use the following space to note any missing or incomplete information in the ERAP. *See corresponding sections of this checklist for information on*					

112.20(h)(2)	**C. Facility Information (sec. 1.2)**	YES	NO	N/A	N/A
	Facility name (sec. 1.2.1)	√			
	Street address	√			
	City, state, zip code	√			
	County	√			
	Phone number	√			

	Latitude/longitude (sec. 1.2.2)	√			
	Wellhead protection area (sec. 1.2.3)		√		
	Owner/operator (both names included, if different) (sec. 1.2.4)	√			
	QI Information (sec. 1.2.5)	√			
	-Name, position, street address, phone numbers	√			
	- Description of specific response training experience	√			
	Oil storage start-up date (sec. 1.2.6)	√			
	Facility operations description (sec. 1.2.7)	√			
	North American Industrial Classification System (NAICS) or Standard Industrial Classification code (SIC)	√			
	Dates and types of substantial expansion (sec. 1.2.8)				
Please use the following space to note any missing or incomplete information in Section 1.2 of the Plan and, to the extent possible, assess the accuracy of the					

FRP 06-TX-00525
Enterprise Products Operating LLC, East Storage/Splitter III

112.20(h)(1) and (3)	**D. Emergency Response Information (sec. 1.3)**	YES	NO	N/A	N/A
	Notification (sec. 1.3.1)				
	Emergency Notification Phone List		√		
	National Response Center phone number	√			
112.20(h)(1)(i)	QI (day and evening) phone numbers	√			
	Company response team (day and evening) phone numbers	√			
	Federal On-Scene Coordinator (OSC) and/or Regional Response Center (day and evening) phone numbers		√		
	Local response team phone numbers (fire department/cooperatives)	√			
	Fire marshal (day and evening) phone numbers	√			
	State emergency response phone number(s)	√			
	State Police phone number	√			
	State Emergency Response Commission (SERC) phone number	√			
	Local emergency planning committee (LEPC) phone number	√			
	Wastewater treatment facility(s) name and phone number (**recommended**)				√
	Local water supply system (day and evening) phone numbers	√			
	Weather report phone number	√			
	Local television/radio phone number(s) for evacuation notification	√			
112.20(h)(3)(i)	Spill response contractor(s)	√			
	Factories/Utilities with water intakes (**recommended**)	√			
	Trustees of sensitive areas (**recommended**)				√
	Hospital phone number	√			
	Spill Response Notification Form				
	Reporter's name, position and phone number	√			
	Company information	√			

	Incident description (source/cause)	√			
	Material (were materials discharged?)	√			
	Response action (meeting federal obligations to report, calling for responsible party, time called)	√			
	Impact	√			
	Date/time of incident, incident address/location, nearest city/state/county/zip code, distance from city/units of measure/direction from city, township, range, borough, container type/tank oil storage capacity	√			
	Units of measure, facility oil storage capacity/units of measure, facility longitude and latitude	√			
Please use the following space to note any missing or incomplete information in Section 1.3 of the Plan. Please use to assess the accuracy of the information					
112.20(h)(1)(iv), 112.20(h)	**Response Equipment (sec 1.3.2)**				
	Equipment Information				
	Equipment list	√			
	Equipment location	√			
	Release handling capabilities and limitations (e.g., launching sites)	√			
Please use the following space to note any missing or incomplete information. *Page 5-1 of the Plan indicates the facility does not maintain spill response*					

112.20(h)(3)(vi)	**E. Response Equipment List (Identify if Facility, OSRO, CO-OP owned by letters O, F, or C) (sec. 1.3.2)**	YES	NO	N/A	N/A
	Skimmers/pumps (operational status, type/model/year, number or quantity, capacity, daily effective recovery rate, storage location)	O, F			
	Boom (containment boom: operational status, year, number, skirt size)	O, F			
	Boom (sorbent boom: operational status, type/model/year, number, size (length))	O, F			
	Chemical countermeasure agents stored	O			
	Sorbents (type, year purchased, amount, storage location)	O, F			
	Hand tools (type, quantity, storage location)	O, F			
	Communications equipment (operational status, type and year, quantity, storage location)	O, F			
	Fire Fighting and Personnel Protective Equipment	O, F			
	Boats and Motors (operational status, type, and year, quantity, storage location)	O, F			
	Other (e.g., heavy equipment, cranes, dozers, etc.) (operational status, type and year, quantity, storage location)	O, F			
	Equipment Location	O, F			
	Amount of oil that emergency response equipment can handle and limitations (e.g., launching sites) must be described.	O			
Please use the following space to note any missing or incomplete information.					

112.20(h)(8)(i) and (ii)	**F. Response Equipment Testing and Deployment Drill Log (sec. 1.3.3)**	YES	NO	N/A	N/A
	Date of last inspection or equipment test	√			
	Inspection Frequency	√			
	Date of Last Deployment	√			
	Deployment Frequency	√			

	OSRO Certification (Note: Facilities without facility owned response equipment must ensure that the Oil Spill Removal Organization that is identified in the response plan to provide this response equipment certifies that the deployment exercises have been met)	√			
Please use the following space to note any missing or incomplete information in Section 1.3.3 of the Plan and verify that the log information is up-to-date during the					

	G. Personnel (sec. 1.3.4)	YES	NO	N/A	N/A
112.20(h)(3)(v), 112.20(h)	**Emergency Response Personnel Information** (Personnel whose duties involve responding to emergencies, including oil discharges, even				
	Response personnel name(s)		√		
	Facility response team title/position		√		
	Response personnel phone numbers (work/home, other)		√		
	Response personnel response time		√		
	Response personnel responsibility		√		
	Response personnel training (type and date)		√		
112.20(h)(3)(i)	**Emergency Response Contractor Information**		√		
	Response contractor name (s)	√			
	Response contractor phone numbers	√			
	Response contractor response time		√		
112.20(h)(3)(ii)	Response contractor evidence of contractual arrangements		√		
	Facility Response Team Information (Composed of Emergency Response Personnel and Emergency Response that will respond				
	Response team member name(s)		√		
	Response team member job function		√		
	Response team member response time		√		
	Response team member phone/pager number		√		
	Name of emergency response contractor (contractors providing facility response team services may be different than contractors providing oil spill response services)	√			
	- Response time	√			
	- Phone/pager		√		
Please use the following space to note any missing or incomplete information in Section 1.3.4 of the Plan. ***Appendix B of the FRP references the "Red Book" for***					

112.20(h)(1)(vi),	H. Evacuation Plans (sec. 1.3.5)	YES	NO	N/A	N/A
	Facility Evacuation Plan (sec. 1.3.5.1)				
	Location of stored materials	√			
	Hazard imposed by spilled materials	√			
	Spill flow direction	√			
	Prevailing wind directions and speed	√			
	Water currents, tides, or wave conditions (if applicable)	√			
	Arrival route of emergency response personnel and response equipment	√			
	Evacuation routes	√			

	Alternative routes of evacuation	√			
	Transportation of injured personnel to nearest emergency medical facility	√			
	Location of alarm/notification systems	√			
	Centralized check-in area for roll call	√			
	Mitigation command center location	√			
	Location of shelter at facility	√			
112.20(h)(3)(vii),	Community Evacuation Plans referenced (sec. 1.3.5.3)	√			
Please use the following space to note any missing or incomplete information in Section 1.3.5 of the plan and to assess the accuracy of the information provided					

FRP 06-TX-00525
Enterprise Products Operating LLC, East Storage/Splitter III

112.20(h)(3)(ix)	**I. Qualified Individual's Duties (sec. 1.3.6)**	YES	NO	N/A	N/A
112.20(h)(3)(ix)(A)	Activate internal alarms and hazard communication systems	√			
112.20(h)(3)(ix)(B)	Notify Response Personnel	√			
112.20(h)(3)(ix)(C)	Identify character, exact source, amount, and extent of the release	√			
112.20(h)(3)(ix)(D)	Notify and provide information to appropriate Federal, State and local authorities	√			
112.20(h)(3)(ix)(E)	Assess interaction of spilled substance with water and/or other substances stored at facility and notify on-scene response personnel of assessment	√			
112.20(h)(3)(ix)(F)	Assess possible hazards to human health and the environment	√			
112.20(h)(3)(ix)(G)	Assess and implement prompt removal actions		√		
112.20(h)(3)(ix)(H)	Coordinate rescue and response actions		√		
112.20(h)(3)(ix)(I)	Access company funding to initiate cleanup activities		√		
112.20(h)(3)(ix)(J)	Direct cleanup activities		√		
Please use the following space to note any missing or incomplete information. *The items checked "NO" above, are not addressed or inadequately addressed in*					

112.20(h)(4)	**J. Hazard Evaluation (sec. 1.4)** *(See Section II, Appendix A)*	YES	NO	N/A	N/A
	Hazard Identification (sec. 1.4.1)				
	Tank Above Ground and Below Ground				
	Tanks (List Tanks by Number, Product and Shell Capacity in the space below)				
	Tank number(s)	√			
	Substance(s) stored	√			
	Quantity(s) stored	√			
	Tank type(s)/year(s) of construction	√			
	Shell capacity(s)	√			
	Failure(s)/cause(s)	√			
	Surface Impoundments (SI)				
	SI Number(s)				√
	Substance(s) Stored				√
	Quantity(s) Stored				√
	Surface area(s)/year(s) of construction				√

	Maximum capacity(s)				√
	Failure(s)/cause(s)				√
	Labeled schematic drawing	√			
	Description of transfers (loading and unloading) and volume of material	√			
	Description of daily operations	√			
	Secondary containment volume(s)	√			
	Normal daily throughput of the facility	√			
Please use the following space to note any missing or incomplete information in Section 1.4.1 of the plan and to assess the accuracy of the information in Section					

FRP 06-TX-00525
Enterprise Products Operating LLC, East Storage/Splitter III

112.20(h)(4)	**K. Vulnerability Analysis (sec. 1.4.2)** (See Appendix A - Calculation of the Planning Distance)	YES	NO	N/A	N/A
	Analysis of potential effects of an oil spill on vulnerable areas. (Attachment C-III to Appendix C to this part provides a method that owners or				
	Water intakes (drinking, cooling or other)	√			
	Schools	√			
	Medical facilities	√			
	Residential areas	√			
	Businesses	√			
	Wetlands or other sensitive environments	√			
	Fish and wildlife	√			
	Lakes and streams	√			
	Endangered flora and fauna	√			
	Recreational areas	√			
	Transportation routes (air, land, and water)	√			
	Utilities	√			
	Other applicable areas of economic importance (list below)	√			
Please use the following space to note any missing or incomplete information in Section 1.4.2 of the plan and to assess the accuracy of the information based on field					

112.20(h)(4)	**L. Analysis of the Potential for an Oil Spill (sec. 1.4.3)**	YES	NO	N/A	N/A
	Description of likelihood of release occurring	√			
	Oil spill history for the life of the facility	√			
	Horizontal range of potential spill	√			
	Vulnerability to natural disaster	√			
	Tank age	√			
	Other factors (e.g., unstable soils, earthquake zones, Karst topography, etc.)	√			
Please use the following space to note any missing or incomplete information in Section 1.4.3 of the Plan and to assess the accuracy of the information based on field					

112.20(h)(4)	**M. Facility Reportable Oil Spill History Description (sec. 1.4.4)**	YES	NO	N/A	N/A

FRP Activity ID: FRP-TX-2012-00048

	Date of discharge(s)	√			
	List of discharge causes	√			
	Material(s) discharged	√			
	Amount of discharges (gallons)	√			
	Amount that reached navigable waters (if applicable)	√			
	Effectiveness and capacity of secondary containment	√			
	Clean-up actions taken	√			
	Steps taken to reduce possibility of reccurrence	√			
	Total oil storage capacity of tank(s) or impoundment(s) from which material discharged	√			
	Enforcement actions	√			
	Effectiveness of monitoring equipment	√			
	Description(s) of how each oil discharge was detected	√			
Please use the following space to note any missing or incomplete information in Sectio 1.4.4 of the Plan.					

	N. Discharge Scenarios (sec. 1.5)	YES	NO	N/A	N/A
	Small Discharges (sec. 1.5.1) (Description of small discharges addressing facility operations and components including but not limited to				
	Loading and unloading operations				√
	Facility maintenance operation				√
	Facility piping	√			
	Pumping stations and sumps	√			
	Oil storage location				√
	Vehicle refueling operations				√
	Age and condition of facility components	√			
	Small volume discharge calculation for a facility	√			
	Facility-specific spill potential analysis		√		
	Average most probable discharge for complexes				√
	1,000 feet of boom (1 hour deployment time)	√			
	Correct amount of boom for complexes				√
	Oil recovery devices equal to small discharge (2 hour recovery time)	√			
	Oil storage capacity for recovered material	√			
	Scenarios Affected by the Response Efforts (sec. 1.5.1.2)				
	Size of the discharge	√			
	Proximity to downgradient wells, waterways, and drinking water intakes		√		
	Proximity to fish and wildlife and sensitive environments		√		
	Likelihood that the discharge will travel offsite (i.e., topography, drainage)	√			
	Location of the material discharged (i.e., on a concrete pad or directly on the soil)		√		
	Material discharged		√		

	Weather or aquatic conditions (i.e., river flow)		√		
	Available remediation equipment	√			
	Probability of a chain reaction of failures		√		
	Direction of discharge pathway	√			
	Medium Discharges (sec. 1.5.1) (Description of medium discharges scenarios addressing facility operations and components including but				
	Loading and unloading operations				√
	Facility maintenance operation				√
	Facility piping	√			
	Pumping stations and sumps	√			
	Oil storage location				√
	Vehicle refueling operations				√
	Age and condition of facility components	√			
	Medium volume discharge calculation for a facility	√			
	Facility-specific spill potential analysis		√		
	Maximum most probably discharge for complexes				√
	Oil recovery devices equal to medium discharge	√			
	Availability of sufficient quantity of boom	√			
	Oil storage capacity for recovered material	√			
	Scenarios Affected by the Response Efforts (sec. 1.5.1.2)				
	Size of the discharge	√			
	Proximity to downgradient wells, waterways, and drinking water intakes		√		
	Proximity to fish and wildlife and sensitive environments		√		
	Likelihood that the discharge will travel offsite (i.e., topography, drainage)		√		
	Location of the material discharged (i.e., on a concrete pad or directly on the soil)		√		
	Material discharged		√		
	Weather or aquatic conditions (i.e., river flow)		√		
	Available remediation equipment	√			
	Probability of a chain reaction of failures		√		
	Direction of discharge pathway		√		
Please use the following space to note any missing or incomplete information in Section 1.5.1 of the Plan and to assess the accuracy of the information provided					

112.20(h)(5)(i)	**O. Worst Case Discharge (sec. 1.5.2)** (See Appendix A) (When planning for the worst case discharge response all of the factors listed in the small and medium discharge section of the response plan shall be addressed)	YES	NO	N/A	N/A
	Facility Specific Worst Case Discharge Scenario		√		
	Description of worst case discharges scenarios addressing facility operations and components including but not limited to (sec.				
	Loading and unloading operations				√

	Facility Maintenance Operation				√
	Facility Piping				√
	Pumping stations and sumps	√			
	Oil storage location				√
	Vehicle refueling operations				√
	Age and condition of facility components	√			
112 Appendix D	Correct Worst Case Discharge (WCD) calculation for specific type of facility	√			
	Correct WCD calculation for complexes				√
112 Appendix E	Sufficient response resources for WCD	√			
	Sources and quantity of equipment for response to WCD	√			
	Oil storage capacity for recovered material	√			
	Scenarios Affected by the Response Efforts (sec. 1.5.1.2)				
	Size of the discharge	√			
	Proximity to downgradient wells, waterways, and drinking water intakes		√		
	Proximity to fish and wildlife and sensitive environments	√			
	Likelihood that the discharge will travel offsite (i.e., topography, drainage)	√			
	Location of the material discharged (i.e., on a concrete pad or directly on the soil)	√			
	Material discharged		√		
	Weather or aquatic conditions (i.e., river flow)	√			
	Available remediation equipment	√			
	Probability of a chain reaction of failures		√		
	Direction of discharge pathway	√			
Please use the following space to note any missing or incomplete information in Section 1.5.2 of the Plan and to assess the accuracy of the information provided					

112.20(h)(6)	**P. Discharge Detection Systems (sec. 1.6)**	YES	NO	N/A	N/A
	Discharge Detection by Personnel (sec. 1.6.1)				
	Description of procedures and personnel for spill detection	√			
	Description of facility inspections	√			
	Description of initial response actions	√			
	Emergency Response Information (referenced)	√			
Please use the following space to note any missing or incomplete information in Section 1.6.1 of the plan.					
Section II,	**Automated Discharge Detection (sec. 1.6.2)**	√			
	Description of automatic spill detection equipment, including overfill alarms and secondary containment sensors	√			
	Description of alarm verification procedures and subsequent actions	√			
	Initial response actions	√			
Please use the following space to note any missing or incomplete information in Section 1.6.2 of the Plan					

112.20(h)(7), Appendix E	Q. Plan Implementation (sec. 1.7)	YES	NO	N/A	N/A
	Identification of response resources for small, medium, and worst case spills (sec. 1.7.1)				
	Description of response actions	√			
	Accessibility of proper response personnel and equipment	√			
	Emergency plans for spill response	√			
	Additional response training	√			
	Additional contracted help	√			
	Access to additional response equipment/experts	√			
	Ability to implement plan, including response training and practice drills	√			
	Temporary storage	√			
	Recommended form detailing immediate action for small, medium and Worst Case spills (sec. 1.7.1.2A) (stop the product flow, warn personnel, shut off ignition sources, initiate containment, notify NRC, notify OSC, notify (as appropriate))	√			
Please use the following space to note any missing or incomplete information in Section 1.7.1 of the Plan.					
	Disposal Plan (sec. 1.7.2)				
	Description of procedures for recovering, reusing, decontaminating or disposing of materials	√			
	Materials addressed in Disposal Plan (recovered product, contaminated soil, contaminated equipment and materials (including drums tank parts, valves and shovels), personnel protective equipment, decontamination solutions, absorbents, spent chemicals))	√			
	Plan prepared in accordance with any federal, state, and/or local regulations	√			
	Plan addresses permits required to transport or dispose of recovered materials	√			
Please use the following space to note any missing or incomplete information in Section 1.7.2 of the Plan.					
Section II, 112.7(e)(1),	**Containment and Drainage Planning (sec. 1.7.3)**				
	Description of containing/controlling a spill through drainage	√			
	Containment and drainage plan available				√
	Available volume of containment	√			
	Drainage route from oil storage and transfer areas				√
	Construction materials used in drainage troughs				√
	Type and number of valves and separators in drainage system				√
	Sump pump capacities				√
	Containment capacities of weirs and booms and their location				√
	Other cleanup materials				√
Please use the following space to note any missing and incomplete information in Section 1.7.3 of the Plan and to assess the accuracy of the information provided					

	R. Self-Inspection, Training, and Meeting Logs (sec. 1.8)	YES	NO	N/A	N/A
	Facility Self-Inspection (sec. 1.8.1)				
Section II, 112.7(e)(8)	Records of tank inspections with dates (tank leaks, tank foundations, tank Piping) contained or cross-referenced in Plan or maintained electronically for five years	√			

Section II, 112.7(e)(8)	Records of secondary containment inspections with dates (dike or berm system, secondary containment, retention and drainage ponds) contained or cross-referenced in Plan or maintained electronically for five years *FRP-06-TX-00525* *Enterprise Products Operating LLC, East Storage/Splitter III*	√			
112.20(h)(8)(i)	Response equipment inspection				
	Response equipment checklist (sec. 1.8.1.2)	√			
	Equipment inventory (item and quantity)	√			
	Storage location (time to access and respond)	√			
	Accessibility (time to access and respond)	√			
	Operational status/condition	√			
	Actual use/testing (last test date and frequency of testing)	√			
	Shelf life (present age, expected replacement date)	√			
	- Inspection date	√			
	- Inspector's signature	√			
	- Inspection records maintained for 5 years	√			
	- Response equipment inspection log (inspector, date, comments)	√			
Please use the following space to note any missing or incomplete information in Section 1.8 of the Plan and to assess the accuracy of the information. *Page 5-1 of*					
	Facility Drills/Exercises (sec. 1.8.2)				
	Description of drill/exercise program based on National Preparedness for Response Exercise Program (PREP) guidelines or other comparable program	√			
	- If "no" alternative program has been approved by EPA RA (describe program below)				√
	QI notification drill				√
	Spill management team tabletop exercise				√
	Equipment deployment exercise				√
	Unannounced exercise				√
	Area exercise				√
	Description of evaluation procedures for drill program				√
	Qualified Individual notification drill log (sec. 1.8.2.1)				
	Date, company, qualified individual, other contacted, emergency scenario, evaluation	√			
	Spill management team tabletop drill log (sec. 1.8.2.2)				
	Date, company, QI, participants, emergency scenario, evaluation, changes to be implemented, time table for implementation	√			
Please use the following space to note any missing or incomplete information in Section 1.8.2 of the Plan and to assess the accuracy of the information provided					
	Response Training (sec. 1.8.3)				
	Description of response training program (including topics)	√			
	Personnel response training logs (name, response training date/and number of hours, prevention training date/and number of hours)	√			
	Discharge prevention meeting logs (date, attendees)	√			
Please use the following space to note any missing or incomplete information in Section 1.8.3 of the Plan and verify that the log information is up-to-date during the					

	S. Diagrams (sec. 1.9)	YES	NO	N/A	N/A
	Site Plan Diagram *Enterprise Products Operating LLC, East Storage/Splitter III*				
	Entire facility to scale	√			
	Above and below-ground storage tanks	√			
	Contents and capacities of bulk oil storage tanks	√			
	Contents and capacities of drum storage areas				√
	Contents and capacities of surface impoundments				√
	Process buildings	√			
	Transfer areas	√			
	Location and capacity of secondary containment systems				√
	Location of hazardous materials	√			
	Location of communications and emergency response equipment				√
	Location of electrical equipment that might contain oil	√			
	If the facility is a complex facility, the interface between EPA and other regulating agencies				√
Please use the following space to note any missing or incomplete information in the Site Plan diagram and to assess the accuracy of the diagram based on field					
	Site Drainage Plan Diagram				
	Major sanitary and storm sewers, manholes, and drains	√			
	Weirs and shut-off valves				√
	Surface water receiving streams				√
	Fire fighting water sources	√			
	Other utilities				√
	Response personnel ingress and egress	√			
	Response equipment transportation routes	√			
	Direction of spill flow from discharge points	√			
Please use the following space to note any missing or incomplete information in the Site Drainage Plan diagram and to assess the accuracy of the diagram based on					
	Site Evacuation Plan Diagram				
	Site plan diagram with evacuation routes	√			
	Location of evacuation regrouping areas	√			
Please use the following space to note any missing or incomplete information in the Site Evacuation Drainage Plan diagram and to assess the accuracy of the					

Section II, 112.7(e)(9)	T. Site Security (sec. 1.10)	YES	NO	N/A	N/A
	• Description of facility security	√			
	(Emergency cut-off locations, enclosures, guards and their duties, lighting, valve and pump locks, pipeline connection caps)	√			
Please use the following space to note any missing or incomplete information in Section 1.10 of the plan and to assess the accuracy of the information provided based					

Please use the following space to describe overall impressions of the facility response plan (i.e., functional, workable). A set of questions is provided in Appendix C to

Reviewed by:	*Mike Clonts*
Date:	*3/15/2012*

FRP-06-TX-00525

Enterprise Products Operating LLC, East Storage/Splitter III

Facility Response Plan Field Inspection Checklist

Activity Information	
Activity Type	*FRP Field Inspection*
Activity Date	**3/15/2012**
EPA Inspector	*Don Smith*

Facility Information								
Facility ID:	FRP Harm Category?	√	Substantial Harm					
		√	Significant & Substantial Harm					
FRP ID:	Complex?		Yes	√	No			
	If Complex, Shared Jurisdiction?		Yes		No	√	N/A	
Facility Name:	*East Storage/Splitter III*							
Address:	*316 S. Main*							
City:	*Mont Belvieu*							
State:	*TX*						Zip: *77580*	
Owner/Operator:	*Enterprise Products Operating LLC*							
FRP Contact:	*Jon Fields*							
Telephone:	*281-385-4300*							
Email:	jefields@eprod.com							
QI:	*Brenda Ganter*							
Telephone:	*281-385-0510*							
Email:	bganter@eprod.com							
Notes/Comments: (Include County name)								

112.20(h), 112 Appendix F Section 1.0	A. General	YES	NO	N/A
112 Appendix F Section 1.0	Copy of FRP is available at the facility	√		

112.20(h)(1), 112 Appendix F Section 1.1	Copy of Emergency Response Action Plan is available at the facility.	√		
112.20(h)(1)(vi), 112.20(h)(3)(vii), 112 Appendix F Section 1.3.5	Evacuation plan is readily available.	√		
Describe how the facility incorporates the FRP into its overall training program:				
Notes				

112.20(h), 112 Appendix F Section 1.3.1	**B. Spill Notification**	**YES**	**NO**	**N/A**
112,20(h)(1)(ii), 112.20(h)(3)(iii), 112 Appendix F Section 1.3.1	Spill notification call-down list contains correct telephone numbers.	√		
112,20(h)(1)(ii), 112.20(h)(3)(iii), 112 Appendix F Section 1.3.1	Emergency contact information has been verified as current.	√		
Notes				

112.20(h)(4), 112 Appendix F Section 1.4	**C. Hazard Evaluation**	**YES**	**NO**	**N/A**
112 Appendix F	Facility total storage capacity corresponds to storage capacity reported in the	√		

Section 1.4.1	plan			
112 Appendix F Section 1.4.1	Secondary containment is adequate for all aboveground tanks	√		
112 Appendix F Sections 1.4.2 and 1.4.3	Following factors affecting response efforts are properly addressed / characterized:			
	- Discharge volume		√	
	- Proximity to downgradient water		√	
	- Proximity to fish and wildlife and sensitive environments		√	
	- Proximity to drinking water intakes		√	
	- Likelihood that discharge will travel offsite		√	
	- Location of material spilled (i.e., on concrete pad or soil)		√	
	- Type of material discharged		√	
	- Weather or aquatic conditions anticipated during adverse conditions		√	
	- Available remediation equipment		√	
	- Probability of chain reaction or failures		√	
	- Direction of spill		√	
112 Appendix F Section 1.4.4	History of all reportable discharges at the facility is maintained with the FRP	√		

Notes: ***The Plan should describe the planning scenario, considering the reasonably expected circumstances of a discharge that would affect the response efforts required. This would include any circumstances the may have not been addressed in the Plan (see comment under Discharge Scenarios below).***

112 Appendix F Section 1.5	D. Discharge Scenarios	YES	NO	N/A
112.20(h)(5)(i), 112 Appendix F Section 1.5.2	Worst-case discharge scenario described in Plan is accurate (e.g., source and impacts)		√	
112 Appendix F Section 1.5.1	Medium discharge scenario described in Plan is accurate (e.g., source and impacts)	√		
112 Appendix F Section 1.5.1	Small discharge scenario described in Plan is accurate (e.g., source and impacts)	√		

Notes

Please clarify the WCD volume in the event the automatic well shut-off fails, including how the wells will be controlled (manual?) and the volumetric difference from the calculation presented in the Plan.

112.20(h)(1) and (h)(3)(ix), 112 Appendix F Sections 1.3.6 and 1.6	E. Response Personnel	YES	NO	N/A
112.20(h)(1)(i), 112 Appendix F Section 1.2	Qualified Individual (QI) information (name, title, telephone numbers) is current	√		
112.20(h)(3)(ix), 112 Appendix F Section 1.3.6	QI is aware of, and prepared to fulfill, responsibilities:	√		
112.20(h)(3)(ix)(A), 112 Appendix F Section 1.3.6	- Activate internal alarms and hazard communication systems	√		
112.20(h)(3)(ix)(B), 112 Appendix F Section 1.3.6	- Notify response personnel	√		
112.20(h)(3)(ix)(C), 112 Appendix F Section 1.3.6	- Identify character, exact source, amount, and extent of the release	√		
112.20(h)(3)(ix)(D), 112 Appendix F Section 1.3.6	- Notify and provide information to appropriate Federal, State, and local authorities	√		
112.20(h)(3)(ix)(E), 112 Appendix F Section 1.3.6	- Assess interaction of substances with water and/or other substances stored at facility and notify on-scene response personnel of assessment	√		
112.20(h)(3)(ix)(F), 112 Appendix F Section 1.3.6	- Assess possible hazards to human health and the environment	√		
112.20(h)(3)(ix)(G), 112 Appendix F Section 1.3.6	- Assess and implement prompt removal actions	√		
112.20(h)(3)(ix)(H), 112 Appendix F Section 1.3.6	- Coordinate rescue and response actions	√		
112.20(h)(3)(ix)(I), 112 Appendix F Section 1.3.6	- Access company funding to initiate cleanup activities	√		

112.20(h)(3)(ix)(J), 112 Appendix F Section 1.3.6	- Direct cleanup activities	√		
112 Appendix F Section 1.2	QI has specific response training experience	√		
112 Appendix F Section 1.6	Facility personnel are familiar with procedures for detecting a discharge	√		
Notes				

112.20, 112 Appendices E and F	**F. Response Equipment**	**YES**	**NO**	**N/A**
112 Appendix E Section 3.0	Required response resources for a small discharge are provided.	√		
112 Appendix E Section 3.3.1	- 1,000 ft of boom and, if marine transfer facility, boom equal to twice the length of largest vessel	√		
112 Appendix E Section 3.3.1	- Capacity of deploying boom within 1 hour of small discharge	√		
112 Appendix E Section 3.3.2	- Response equipment capable of being deployed within 2 hours of a small discharge	√		
112 Appendix E Section 3.3.2	- Response equipment daily recovery capacity equal to the total volume of small discharge	√		
112 Appendix E Section 12.2	- Temporary storage capacity equal to twice the volume of the small discharge	√		
112 Appendix E Section 4.0	Required response resources for a medium discharge are provided:	√		
112 Appendix E Section 4.5	- Sufficient quantities of boom for containment and collection and for protection	√		
112 Appendix E Section 4.4	- Response equipment daily recovery capacity equal to 50% of total volume of small discharge	√		
112.20(h)(3)(ii), 112 Appendix F Section 1.3.4	Facility has current signed contract with response contractor and/or membership in cleanup co-op.	√		

	- If YES, facility has evidence of contractor's equipment deployment exercises (annually)	√		
112.20, 112 Appendix F	Facility has its own response equipment.	√		
112.20(h)(8)(i) and (ii), 112 Appendix F Section 1.3.3, 112 Appendix F Section 1.8.1.2	- If YES, facility response equipment is regularly inspected (check logs)	√		
112 Appendix F Section 1.3.2	Following equipment is provided and, if so, is operational, accessible, and has adequate capacity:	√		
112 Appendix F Section 1.3.2(1)	- Skimmers		√	
112 Appendix F Section 1.3.2(1)	- Pumps	√		
112 Appendix F Section 1.3.2(2)	- Containment booms	√		
112 Appendix F Section 1.3.2(5)	- Sorbents	√		
112 Appendix F Section 1.3.2(3)	- Chemical countermeasures			√
112 Appendix F Section 1.3.2(7)	- Communication equipment	√		
112 Appendix F Section 1.3.2(8)	- Firefighting equipment	√		
112 Appendix F Section 1.3.2(8)	- Personal protective equipment	√		
112 Appendix F Section 1.3.2(9)	- Other equipment, boots, motors, etc.	√		
112 Appendix F Section 1.7.2	Procedures have been established for recovering, reusing, decontaminating or disposing of materials	√		

Notes

The Plan indicates the facility does not maintain spill response equipment, and OSRO's will respond to a Worst Case Discharge. Enterprise maintains two response trailers containing equipment that may be utilized in the event of a discharge.

112 Appendix F	**G. Self Inspection**	**YES**	**NO**	**N/A**

Section 1.8.1	G. Self Inspection	YES	NO	N/A
112 Appendix F Section 1.8.1	Records of tank inspections are maintained (check last 5 years of records)	√		
	The following industry standard(s) are used to inspect aboveground bulk storage containers:	√		
	- Steel Tank Institute (STI) SP-1			√
	- American Petroleum Institute (API) Standard 653			√
	- Hybrid program developed by Professional Engineer			√
	- Other (specify in notes/comments section below)			√
112 Appendix F Section 1.8.1	Records of secondary containment inspections are maintained (check last 5 years of records)	√		
112.20(h)(6), 112 Appendix F Section 1.6	Automatic discharge detection/prevention systems are inspected/tested regularly (overfill alarms, secondary containment sensors)	√		
112 Appendix F Section 1.8.3	Discharge prevention meetings are held periodically (check last 5 years of records)	√		
Notes				

112.20(h)(8)(ii), 112.21, Appendix F Section 1.8.2	H. Drills/Exercises	YES	NO	N/A
112.21(c), 112 Appendix F Section 1.8.2	Facility drills/exercises program is based on National Preparedness for Response Exercise Program (PREP) Guidelines	√		
	- If NO, alternative program has been approved by the EPA RA.			√
	QI notification drills are performed (quarterly)			√
	Spill Management Team Tabletop Exercises are performed (annually)			√

	Facility Equipment Deployment Exercises are performed (semi-annually)			√
	Unannounced Exercises are performed (annually)			√
	Area Exercises are performed			√
Notes				

112.20(h)(9), 112 Appendix F Section 1.9	**I. Diagrams**	**YES**	**NO**	**N/A**
112 Appendix F Section 1.9(1)	Site plan diagram appears to accurately represent the facility	√		
112 Appendix F Section 1.9(2)	Drainage plan appears to accurately represent the facility	√		
Notes				

Field Notes	
Area	**Notes/Remarks**

Photo Documentation Log	
Photo Number	**Description (include date, location and direction)**
	See separate Photo Documentation Log

Facility Response Plan
Plan Review Checklist
For Verifying Compliance with Facility Response Plan Requirements

Activity Information		
Activity Type		FRP Plan Review
Reason for Review		Initial Plan Submittal (new FRP)
		5-year Review
		Plan Amendment (note type)
	√	Other (note other reason)
		Note: ***Response to inspection review. Plan totally re-written by The WCM Group.***
Activity Date		5/30/2012
EPA Inspector		***Mike Clonts/Don Smith***

112.20(h)(11)	**A. Response Plan Cover Sheet (sec. 2.0)**	YES	NO	N/A
	General Information (sec 2.1)			
	Facility name	√		
	Facility address	√		
	Facility telephone number	√		
	Mailing address (if different from facility address)	√		
	Facility owner/operator and address **(recommended)**	√		
	Facility owner telephone **(recommended)**	√		
	Dun & Bradstreet number		√	
	Longitude (degrees, minutes, seconds)	√		
	Latitude (degree, minutes, seconds)	√		
	North American Industrial Classification System (NAICS) code		√	
	Facility start up date **(recommended)**		√	
	Facility acres **(recommended)**		√	
	Name of protected waterway or environmentally sensitive area		√	
	Distance to navigable water		√	
	Worst case discharge amount (gallons)	√		
	Maximum oil storage capacity (gallons)		√	
	Largest aboveground storage tank (AST) capacity (gallons)		√	
	Total number of ASTs		√	
	Total number of underground storage tanks (USTs)		√	
	Total UST storage		√	
	Total storage of drums and transformers that contain oil		√	
	Number of surface impoundments and total storage of surface impoundments			√
	Applicability of Substantial Harm Criteria (sec.2.2)			
	Attachment C-1 with answer to each applicability question	√		
	Documentation of reliability and analytical soundness of alternate formula			√
Please use the following space to note any missing or incomplete information.				
	Certification (sec. 2.3)			

	Plan holder certification is included (contains signature, title, and date)	√		
Please use the following space to note any missing or incomplete information.				
	Verification of Contract (sec. 2.4)			
	Plan holder certification is included (contains signature, title, and date)	√		
Please use the following space to note any missing or incomplete information. ***The items checked "NO" above, are not addressed or inadequately addressed in the Plan. The Plan must be amended to include these items.***				
112.20(h)(1)	**B. Emergency Response Action Plan (ERAP) (sec. 1.1)**	YES	NO	N/A
112.20(h)(1)	Separate Section of FRP		√	
112,20(h)(1)(i),	Qualified Individual (QI) Information (sec. 1.2)		√	
112,20(h)(1)(ii), 112.20(h)(3)(iii)	Emergency Notification List (sec. 1.3.1)		√	
	Spill Response Notification Form (sec. 1.3.1)	√		
112.20(h)(1)(iv)	Response Equipment List and Location (sec. 1.3.2)		√	
112.20(h)(1)(iv)	Response Equipment Testing and Deployment (sec. 1.3.4)		√	
112.20(h)(1)(v)	Facility Response Team List (sec. 1.3.4)		√	
112.20(h)(1)(vi)	Evacuation Plan (sec. 1.3.5)			
112.20(h)(1)(vii)	Immediate Actions (sec. 1.7.1)	√		
112.20(h)(1)(viii)	Facility Diagrams (sec. 1.9)		√	
	*The sections above should be extracted from the more detailed corresponding sections of the plan.			
Please use the following space to note any missing or incomplete information in the ERAP. ***See corresponding sections of this checklist for information on items marked "NO" above.***				
112.20(h)(2)	**C. Facility Information (sec. 1.2)**	YES	NO	N/A
	Facility name (sec. 1.2.1)	√		
	Street address	√		
	City, state, zip code	√		
	County		√	
	Phone number	√		
	Latitude/longitude (sec. 1.2.2)	√		
	Wellhead protection area (sec. 1.2.3)		√	
	Owner/operator (both names included, if different) (sec. 1.2.4)	√		
	QI Information (sec. 1.2.5)	√		
	-Name, position, street address, phone numbers	√		
	- Description of specific response training experience		√	
	Oil storage start-up date (sec. 1.2.6)		√	
	Facility operations description (sec. 1.2.7)	√		
	North American Industrial Classification System (NAICS) or Standard Industrial Classification code (SIC)		√	
	Dates and types of substantial expansion (sec. 1.2.8)		√	
Please use the following space to note any missing or incomplete information in Section 1.2 of the Plan and, to the extent possible, assess the accuracy of the information provided based on field inspection. ***The items checked "NO" above, are not addressed or inadequately addressed in the Plan. The Plan must be amended to include these items.***				
112.20(h)(1) and (3)	**D. Emergency Response Information (sec. 1.3)**	YES	NO	N/A
	Notification (sec. 1.3.1)			
	Emergency Notification Phone List		√	
	National Response Center phone number	√		

112.20(h)(1)(i)	QI (day and evening) phone numbers	√		
	Company response team (day and evening) phone numbers	√		
	Federal On-Scene Coordinator (OSC) and/or Regional Response Center (day and evening) phone numbers	√		
	Local response team phone numbers (fire department/cooperatives)	√		
	Fire marshal (day and evening) phone numbers	√		
	State emergency response phone number(s)	√		
	State Police phone number		√	
	State Emergency Response Commission (SERC) phone number	√		
	Local emergency planning committee (LEPC) phone number	√		
	Wastewater treatment facility(s) name and phone number (**recommended**)		√	
	Local water supply system (day and evening) phone numbers		√	
	Weather report phone number	√		
	Local television/radio phone number(s) for evacuation notification	√		
112.20(h)(3)(i)	Spill response contractor(s)	√		
	Factories/Utilities with water intakes (**recommended**)		√	
	Trustees of sensitive areas (**recommended**)		√	
	Hospital phone number	√		
	Spill Response Notification Form			
	Reporter's name, position and phone number	√		
	Company information	√		
	Incident description (source/cause)	√		
	Material (were materials discharged?)	√		
	Response action (meeting federal obligations to report, calling for responsible party, time called)	√		
	Impact	√		
	Date/time of incident, incident address/location, nearest cit,/state/count,/zi, code, distance from city/units of measure/direction from city, township, range, borough, container type/tank oil storage capacity	√		
	Units of measure, facility oil storage capacity/units of measure, facility longitude and latitude	√		
Please use the following space to note any missing or incomplete information in Section 1.3 of the Plan. Please use to assess the accuracy of the information provided based on field inspection. ***The items checked "NO" above, are not addressed or inadequately addressed in the Plan. The Plan must be amended to include these items.***				
112.20(h)(1)(iv), 112.2	**Response Equipment (sec 1.3.2)**			
	Equipment Information			
	Equipment list		√	
	Equipment location		√	
	Release handling capabilities and limitations (e.g., launching sites)		√	
Please use the following space to note any missing or incomplete information. ***The items checked "NO" above, are not addressed or inadequately addressed in the Plan. The Plan must be amended to include these items.***				
112.20(h)(3)(vi)	**E. Response Equipment List (Identify if Facility, OSRO, CO-OP owned by letters O, F, or C) (sec. 1.3.2)**	YES	NO	N/A
	Skimmers/pumps (operational status, type/model/year, number or quantity, capacity, daily effective recovery rate, storage location)	*O*	*F*	
	Boom (containment boom: operational status, year, number, skirt size)	*O*	*F*	
	Boom (sorbent boom: operational status, type/model/year, number, size (length))	*O*	*F*	
	Chemical countermeasure agents stored	*O*	*F*	

	Sorbents (type, year purchased, amount, storage location)	O	F	
	Hand tools (type, quantity, storage location)	O	F	
	Communications equipment (operational status, type and year, quantity, storage location)	O	F	
	Fire Fighting and Personnel Protective Equipment	O	F	
	Boats and Motors (operational status, type, and year, quantity, storage location)	O	F	
	Other (e.g., heavy equipment, cranes, dozers, etc.) (operational status, type and year, quantity, storage location)	O	F	
	Equipment Location	O	F	
	Amount of oil that emergency response equipment can handle and limitations (e.g., launching sites) must be descr bed.	O	F	

Please use the following space to note any missing or incomplete information. ***The previous FRP indicated facility owned response equipment would be utilized in the event of a spill. Page 19 of the current Plan states "Response equipment would consist of miscellaneous tools, and sorbent materials as needed." Facility owned response equipment must be listed in the Plan.***

112.20(h)(8)(i) and (ii)	**F. Response Equipment Testing and Deployment Drill Log (sec. 1.3.3)**	YES	NO	N/A
	Date of last inspection or equipment test		√	
	Inspection Frequency		√	
	Date of Last Deployment		√	
	Deployment Frequency		√	
	OSRO Certification (Note: Facilities without facility owned response equipment must ensure that the Oil Spill Removal Organization that is identified in the response plan to provide this response equipment certifies that the deployment exercises have been met)		√	

Please use the following space to note any missing or incomplete information in Section 1.3.3 of the Plan and verify that the log information is up-to-date during the field inspection. ***The items checked "NO" above, are not addressed or inadequately addressed in the Plan. The Plan must be amended to include these items.***

	G. Personnel (sec. 1.3.4)	YES	NO	N/A
112.20(h)(3)(v), 112.20	**Emergency Response Personnel Information** (Personnel whose duties involve responding to emergencies, including oil discharges, even when they are not present at the site)			
	Response personnel name(s)	√		
	Facility response team title/position	√		
	Response personnel phone numbers (work/home, other)	√		
	Response personnel response time		√	
	Response personnel respons bility	√		
	Response personnel training (type and date)	√		
112.20(h)(3)(i)	**Emergency Response Contractor Information**		√	
	Response contractor name (s)	√		
	Response contractor phone numbers	√		
	Response contractor response time		√	
112.20(h)(3)(ii)	Response contractor evidence of contractual arrangements	√		
	Facility Response Team Information (Composed of Emergency Response Personnel and Emergency			
	Response team member name(s)	√		
	Response team member job function	√		
	Response team member response time		√	
	Response team member phone/pager number	√		

	Name of emergency response contractor (contractors providing facility response team services may be different than contractors providing oil spill response services)	√		
	- Response time		√	
	- Phone/pager	√		
Please use the following space to note any missing or incomplete information in Section 1.3.4 of the Plan. ***The items checked "NO" above, are not addressed or inadequately addressed in the Plan. The Plan must be amended to include these items.***				
112.20(h)(1)(vi), 112.20(h)(3)(vii)	**H. Evacuation Plans (sec. 1.3.5)**	YES	NO	N/A
	Facility Evacuation Plan (sec. 1.3.5.1)			
	Location of stored materials		√	
	Hazard imposed by spilled materials		√	
	Spill flow direction		√	
	Prevailing wind directions and speed		√	
	Water currents, tides, or wave conditions (if applicable)		√	
	Arrival route of emergency response personnel and response equipment		√	
	Evacuation routes		√	
	Alternative routes of evacuation		√	
	Transportation of injured personnel to nearest emergency medical facility		√	
	Location of alarm/notification systems		√	
	Centralized check-in area for roll call		√	
	Mitigation command center location		√	
	Location of shelter at facility		√	
112.20(h)(3)(vii), 112.20(h)(1)(vi)	Community Evacuation Plans referenced (sec. 1.3.5.3)		√	
Please use the following space to note any missing or incomplete information in Section 1.3.5 of the plan and to assess the accuracy of the information provided based on field inspection. ***The items checked "NO" above, are not addressed or inadequately addressed in the Plan. The Plan must be amended to include these items.***				
112.20(h)(3)(ix)	**I. Qualified Individual's Duties (sec. 1.3.6)**	YES	NO	N/A
112.20(h)(3)(ix)(A)	Activate internal alarms and hazard communication systems	√		
112.20(h)(3)(ix)(B)	Notify Response Personnel	√		
112.20(h)(3)(ix)(C)	Identify character, exact source, amount, and extent of the release	√		
112.20(h)(3)(ix)(D)	Notify and provide information to appropriate Federal, State and local authorities	√		
112.20(h)(3)(ix)(E)	Assess interaction of spilled substance with water and/or other substances stored at facility and notify on-scene response personnel of assessment	√		
112.20(h)(3)(ix)(F)	Assess possible hazards to human health and the environment	√		
112.20(h)(3)(ix)(G)	Assess and implement prompt removal actions	√		
112.20(h)(3)(ix)(H)	Coordinate rescue and response actions	√		
112.20(h)(3)(ix)(I)	Access company funding to initiate cleanup activities	√		
112.20(h)(3)(ix)(J)	Direct cleanup activities	√		
Please use the following space to note any missing or incomplete information.				
112.20(h)(4)	**J. Hazard Evaluation (sec. 1.4)** *(See Section II, Appendix A)*	YES	NO	N/A
	Hazard Identification (sec. 1.4.1)			

	Tank Above Ground and Below Ground			
	Tanks (List Tanks by Number, Product and Shell Capacity in the space below)			
	Tank number(s)		√	
	Substance(s) stored		√	
	Quantity(s) stored		√	
	Tank type(s)/year(s) of construction		√	
	Shell capacity(s)		√	
	Failure(s)/cause(s)		√	
	Surface Impoundments (SI)			
	SI Number(s)			√
	Substance(s) Stored			√
	Quantity(s) Stored			√
	Surface area(s)/year(s) of construction			√
	Maximum capacity(s)			√
	Failure(s)/cause(s)			√
	Labeled schematic drawing	√		
	Description of transfers (loading and unloading) and volume of material	√		
	Description of daily operations	√		
	Secondary containment volume(s)		√	
	Normal daily throughput of the facility	√		
Please use the following space to note any missing or incomplete information in Section 1.4.1 of the plan and to assess the accuracy of the information in Section 1.4.1 of the plan and to assess the accuracy of the information based on field inspection. ***The items checked "NO" above, are not addressed or inadequately addressed in the Plan. The Plan must be amended to include these items. As the Plan is not an ICP, referencing the SPCC Plan is not acceptable.***				
112.20(h)(4)	**K. Vulnerability Analysis (sec. 1.4.2)** (See Appendix A - Calculation of the Planning Distance)	YES	NO	N/A
	Analysis of potential effects of an oil spill on vulnerable areas. (Attachment C-III to Appendix C to this part provides a method that owners or operators shall use to determine appropriate distances from the facility to fish and wildlife and sensitive environments. Owners or operators can use a comparable formula that is considered acceptable by the Regional Administrator (RA). If a comparable formula is used, documentation of the reliability and analytical soundness of the formula must be attached to the Response Plan Cover Sheet.)			
	Water intakes (drinking, cooling or other)		√	
	Schools		√	
	Medical facilities		√	
	Residential areas		√	
	Businesses		√	
	Wetlands or other sensitive environments		√	
	Fish and wildlife		√	
	Lakes and streams		√	
	Endangered flora and fauna		√	
	Recreational areas		√	
	Transportation routes (air, land, and water)		√	
	Utilities		√	
	Other applicable areas of economic importance (list below)		√	

Please use the following space to note any missing or incomplete information in Section 1.4.2 of the plan and to assess the accuracy of the information based on field inspection. ***The FRP covered sensitive environmental areas near the facility, but it did not include the requisite protocols required by a complete Vulnerability Analysis. Regulations require a planning distance calculation be developed in the Plan. Consequently, the vulnerability analysis will need to be expanded accordingly.***

112.20(h)(4)	**L. Analysis of the Potential for an Oil Spill (sec. 1.4.3)**	YES	NO	N/A
	Description of likelihood of release occurring	√		
	Oil spill history for the life of the facility	√		
	Horizontal range of potential spill		√	
	Vulnerability to natural disaster		√	
	Tank age		√	
	Other factors (e.g., unstable soils, earthquake zones, Karst topography, etc.)		√	

Please use the following space to note any missing or incomplete information in Section 1.4.3 of the Plan and to assess the accuracy of the information based on field inspection. ***The items checked "NO" above, are not addressed or inadequately addressed in the Plan. The Plan must be amended to include these items.***

112.20(h)(4)	**M. Facility Reportable Oil Spill History Description (sec. 1.4.4)**	YES	NO	N/A
	Date of discharge(s)	√		
	List of discharge causes	√		
	Material(s) discharged	√		
	Amount of discharges (gallons)	√		
	Amount that reached navigable waters (if applicable)	√		
	Effectiveness and capacity of secondary containment	√		
	Clean-up actions taken	√		
	Steps taken to reduce possibility of reccurrence	√		
	Total oil storage capacity of tank(s) or impoundment(s) from which material discharged	√		
	Enforcement actions	√		
	Effectiveness of monitoring equipment	√		
	Description(s) of how each oil discharge was detected	√		

Please use the following space to note any missing or incomplete information in Sectio 1.4.4 of the Plan.

	N. Discharge Scenarios (sec. 1.5)	YES	NO	N/A
	Small Discharges (sec. 1.5.1) (Description of small discharges addressing facility operations and components including but not limited to (see. 1.5.1.1):			
	Loading and unloading operations			√
	Facility maintenance operation			√
	Facility piping	√		
	Pumping stations and sumps	√		
	Oil storage location	√		
	Vehicle refueling operations			√
	Age and condition of facility components		√	
	Small volume discharge calculation for a facility	√		
	Facility-specific spill potential analysis		√	
	Average most probable discharge for complexes	√		
	1,000 feet of boom (1 hour deployment time)		√	
	Correct amount of boom for complexes		√	

	Oil recovery devices equal to small discharge (2 hour recovery time)	√		
	Oil storage capacity for recovered material	√		
	Scenarios Affected by the Response Efforts (sec. 1.5.1.2)			
	Size of the discharge	√		
	Proximity to downgradient wells, waterways, and drinking water intakes		√	
	Proximity to fish and wildlife and sensitive environments		√	
	Likelihood that the discharge will travel offsite (i.e., topography, drainage)	√		
	Location of the material discharged (i.e., on a concrete pad or directly on the soil)		√	
	Material discharged	√		
	Weather or aquatic conditions (i.e., river flow)	√	√	
	Available remediation equipment	√		
	Probability of a chain reaction of failures		√	
	Direction of discharge pathway		√	
	Medium Discharges (sec. 1.5.1) (Description of medium discharges scenarios addressing facility operations and components including but not limited to (sec. 1.5.1.1):			
	Loading and unloading operations			√
	Facility maintenance operation			√
	Facility piping			√
	Pumping stations and sumps	√		
	Oil storage location			√
	Vehicle refueling operations			√
	Age and condition of facility components		√	
	Medium volume discharge calculation for a facility	√		
	Facility-specific spill potential analysis		√	
	Maximum most probably discharge for complexes	√		
	Oil recovery devices equal to medium discharge	√		
	Availability of sufficient quantity of boom	√		
	Oil storage capacity for recovered material	√		
	Scenarios Affected by the Response Efforts (sec. 1.5.1.2)			
	Size of the discharge	√		
	Proximity to downgradient wells, waterways, and drinking water intakes		√	
	Proximity to fish and wildlife and sensitive environments		√	
	Likelihood that the discharge will travel offsite (i.e., topography, drainage)		√	
	Location of the material discharged (i.e., on a concrete pad or directly on the soil)		√	
	Material discharged	√		
	Weather or aquatic conditions (i.e., river flow)		√	
	Available remediation equipment	√		
	Probability of a chain reaction of failures		√	
	Direction of discharge pathway		√	
Please use the following space to note any missing or incomplete information in Section 1.5.1 of the Plan and to assess the accuracy of the information provided based on field inspection. ***The items checked "NO" above, are not addressed or inadequately addressed in the Plan. The Plan must be amended to include these items.***				
112.20(h)(5)(i)	**O. Worst Case Discharge (sec. 1.5.2)** (See Appendix A) (When planning	YES	NO	N/A
	Facility Specific Worst Case Discharge Scenario		√	

	Description of worst case discharges scenarios addressing facility operations and components including but not limited to (sec. 1.5.1.1):			
	Loading and unloading operations			√
	Facility Maintenance Operation			√
	Facility Piping			√
	Pumping stations and sumps	√		
	Oil storage location			√
	Vehicle refueling operations			√
	Age and condition of facility components		√	
112 Appendix D	Correct Worst Case Discharge (WCD) calculation for specific type of facility	√		
	Correct WCD calculation for complexes	√		
112 Appendix E	Sufficient response resources for WCD	√		
	Sources and quantity of equipment for response to WCD	√		
	Oil storage capacity for recovered material	√		
	Scenarios Affected by the Response Efforts (sec. 1.5.1.2)			
	Size of the discharge	√		
	Proximity to downgradient wells, waterways, and drinking water intakes		√	
	Proximity to fish and wildlife and sensitive environments	√		
	Likelihood that the discharge will travel offsite (i.e., topography, drainage)	√		
	Location of the material discharged (i.e., on a concrete pad or directly on the soil)	√		
	Material discharged	√		
	Weather or aquatic conditions (i.e., river flow)	√		
	Available remediation equipment	√		
	Probability of a chain reaction of failures		√	
	Direction of discharge pathway	√		
Please use the following space to note any missing or incomplete information in Section 1.5.2 of the Plan and to assess the accuracy of the information provided based on field inspection. ***The items checked "NO" above, are not addressed or inadequately addressed in the Plan. The Plan must be amended to include these items.***				
112.20(h)(6)	**P. Discharge Detection Systems (sec. 1.6)**	YES	NO	N/A
	Discharge Detection by Personnel (sec. 1.6.1)			
	Description of procedures and personnel for spill detection		√	
	Description of facility inspections		√	
	Description of initial response actions		√	
	Emergency Response Information (referenced)		√	
Please use the following space to note any missing or incomplete information in Section 1.6.1 of the plan. ***The items checked "NO" above, are not addressed or inadequately addressed in the Plan. The Plan must be amended to include these items. As the Plan is not an ICP, referencing the SPCC Plan is not acceptable.***				
Section II, 112.7(e)(5)(iii)(D), 112.7(e)(5(iii), 112.7(e)(2)(viii), 112.7(e)(7)(v), Appendix A	**Automated Discharge Detection (sec. 1.6.2)**		√	
	Description of automatic spill detection equipment, including overfill alarms and secondary containment sensors		√	
	Description of alarm verification procedures and subsequent actions		√	
	Initial response actions		√	

Please use the following space to note any missing or incomplete information in Section 1.6.2 of the Plan. ***The items checked "NO" above, are not addressed or inadequately addressed in the Plan. The Plan must be amended to include these items. As the Plan is not an ICP, referencing the SPCC Plan is not acceptable.***

112.20(h)(7), Appendix E	**Q. Plan Implementation (sec. 1.7)**	YES	NO	N/A
	Identification of response resources for small, medium, and worst case spills (sec. 1.7.1)			
	Description of response actions	√		
	Accessibility of proper response personnel and equipment	√		
	Emergency plans for spill response	√		
	Additional response training	√		
	Additional contracted help	√		
	Access to additional response equipment/experts	√		
	Ability to implement plan, including response training and practice drills	√		
	Temporary storage	√		
	Recommended form detailing immediate action for small, medium and Worst Case spills (sec. 1.7.1.2A) (stop the product flow, warn personnel, shut off ignition sources, initiate containment, notify NRC, notify OSC, notify (as appropriate))	√		

Please use the following space to note any missing or incomplete information in Section 1.7.1 of the Plan.

	Disposal Plan (sec. 1.7.2)			
	Description of procedures for recovering, reusing, decontaminating or disposing of materials		√	
	Materials addressed in Disposal Plan (recovered product, contaminated soil, contaminated equipment and materials (including drums tank parts, valves and shovels), personnel protective equipment, decontamination solutions, absorbents, spent chemicals))		√	
	Plan prepared in accordance with any federal, state, and/or local regulations		√	
	Plan addresses permits required to transport or dispose of recovered materials		√	

Please use the followin_ s, ace to note an_ missin_ or incom, lete information in Section 1.7.2 of the Plan.

Section II, 112.7(e)(1), 112.7(e)(7), Appendix A	**Containment and Drainage Planning (sec. 1.7.3)**			
	Description of containing/controlling a spill through drainage		√	
	Containment and drainage plan available		√	
	Available volume of containment		√	
	Drainage route from oil storage and transfer areas		√	
	Construction materials used in drainage troughs		√	
	Type and number of valves and separators in drainage system		√	
	Sump pump capacities		√	
	Containment capacities of weirs and booms and their location		√	
	Other cleanup materials		√	

Please use the following space to note any missing and incomplete information in Section 1.7.3 of the Plan and to assess the accuracy of the information provided during field inspection. ***The items checked "NO" above, are not addressed or inadequately addressed in the Plan. The Plan must be amended to include these items. As the Plan is not an ICP, referencing the SPCC Plan is not acceptable.***

	R. Self-Inspection, Training, and Meeting Logs (sec. 1.8)	YES	NO	N/A
	Facility Self-Inspection (sec. 1.8.1)			

Section II, 112.7(e)(8)	Records of tank inspections with dates (tank leaks, tank foundations, tank Piping) contained or cross-referenced in Plan or maintained electronically for five years		√	
Section II, 112.7(e)(8)	Records of secondary containment inspections with dates (dike or berm system, secondary containment, retention and drainage ponds) contained or cross-referenced in Plan or maintained electronically for five years	√		
112.20(h)(8)(i)	Response equipment inspection			
	Response equipment checklist (sec. 1.8.1.2)		√	
	Equipment inventory (item and quantity)		√	
	Storage location (time to access and respond)		√	
	Accessibility (time to access and respond)		√	
	Operational status/condition		√	
	Actual use/testing (last test date and frequency of testing)		√	
	Shelf life (present age, expected replacement date)		√	
	- Inspection date		√	
	- Inspector's signature		√	
	- Inspection records maintained for 5 years		√	
	- Response equipment inspection log (inspector, date, comments)		√	
Please use the following space to note any missing or incomplete information in Section 1.8 of the Plan and to assess the accuracy of the information. ***The items checked "NO" above, are not addressed or inadequately addressed in the Plan. The Plan must be amended to include these items. As the Plan is not an ICP, referencing the SPCC Plan is not acceptable.***				
	Facility Drills/Exercises (sec. 1.8.2)			
	Description of drill/exercise program based on National Preparedness for Response Exercise Program (PREP) guidelines or other comparable program	√		
	- If "no" alternative program has been approved by EPA RA (describe program below)			√
	QI notification drill			√
	Spill management team tabletop exercise			√
	Equipment deployment exercise			√
	Unannounced exercise			√
	Area exercise			√
	Description of evaluation procedures for drill program			√
	Qualified Individual notification drill log (sec. 1.8.2.1)			
	Date, company, qualified individual, other contacted, emergency scenario, evaluation	√		
	Spill management team tabletop drill log (sec. 1.8.2.2)			
	Date, company, QI, participants, emergency scenario, evaluation, changes to be implemented, time table for implementation	√		
Please use the following space to note any missing or incomplete information in Section 1.8.2 of the Plan and to assess the accuracy of the information provided based on field inspection.				
	Response Training (sec. 1.8.3)			
	Description of response training program (including topics)	√		
	Personnel response training logs (name, response training date/and number of hours, prevention training date/and number of hours)	√		
	Discharge prevention meeting logs (date, attendees)	√		
Please use the following space to note any missing or incomplete information in Section 1.8.3 of the Plan and verify that the log information is up-to-date during the field inspection.				
	S. Diagrams (sec. 1.9)	YES	NO	N/A

	Site Plan Diagram			
	Entire facility to scale	√		
	Above and below-ground storage tanks		√	
	Contents and capacities of bulk oil storage tanks		√	
	Contents and capacities of drum storage areas			√
	Contents and capacities of surface impoundments			√
	Process buildings	√		
	Transfer areas		√	
	Location and capacity of secondary containment systems		√	
	Location of hazardous materials		√	
	Location of communications and emergency response equipment		√	
	Location of electrical equipment that might contain oil	√		
	If the facility is a complex facility, the interface between EPA and other regulating agencies			√
Please use the following space to note any missing or incomplete information in the Site Plan diagram and to assess the accuracy of the diagram based on field inspection. ***The items checked "NO" above, are not addressed or inadequately addressed in the Plan. The Plan must be amended to include these items.***				
	Site Drainage Plan Diagram			
	Major sanitary and storm sewers, manholes, and drains		√	
	Weirs and shut-off valves		√	
	Surface water receiving streams	√		
	Fire fighting water sources		√	
	Other utilities		√	
	Response personnel ingress and egress		√	
	Response equipment transportation routes		√	
	Direction of spill flow from discharge points		√	
Please use the followin_ s, ace to note an_ missin_ or incom, lete information in the Site Draina_e Plan dia_ram and to assess the accuracy of the diagram based on field inspection. ***The items checked "NO" above, are not addressed or inadequately addressed in the Plan. The Plan must be amended to include these items.***				
	Site Evacuation Plan Diagram			
	Site plan diagram with evacuation routes		√	
	Location of evacuation regrouping areas		√	
Please use the following space to note any missing or incomplete information in the Site Evacuation Drainage Plan diagram and to assess the accuracy of the diagram based on field inspection. ***The items checked "NO" above, are not addressed or inadequately addressed in the Plan. The Plan must be amended to include these items.***				
Section II, 112.7(e)(9)	**T. Site Security (sec. 1.10)**	YES	NO	N/A
	• Description of facility security		√	
	(Emergency cut-off locations, enclosures, guards and their duties, lighting, valve and pump locks, pipeline connection caps)		√	
Please use the following space to note any missing or incomplete information in Section 1.10 of the plan and to assess the accuracy of the information provided based on field inspection. ***The items checked "NO" above, are not addressed or inadequately addressed in the Plan. The Plan must be amended to include these items.***				
Please use the following space to describe overall impressions of the facility response plan (i.e., functional, workable). A set of questions is provided in Appendix C to assist the inspector is assessing overall Plan adequacy.				
Reviewed by:	***Mike Clonts/Don Smith***			
Date:	***5/30/2012***			

U.S. EPA Facility Response Plan (FRP) -- Review Form

I. Facility Information

FRP Number: ***FRP-06-TX-00625***	Facility Name: ***East Storage/Splitter III***	
Facility Owner: ***Enterprise Products Operating LLC***		
Facility Operator (if different from owner):		
Mailing Address: ***316 S. Main, P. O. Box 573***		
City: ***Mont Belvieu***	State: ***TX***	Zip: ***77580-0573***
Telephone: ***281-385-0510***	Fax:	
Latitude: ***29.8380555***	Longitude: ***-94.891111***	
Other Description or Directions:		
Site Location Map Attached (Y/N) : ***N***		

II. Facility Overview

Date of Initial Facility Operation:			6/1/1995		
Total Storage Capacity (bbls/gals):			***105,435,036 gal***		# Of Tanks: ***6***
Worst Case Discharge (bbls/gals):			***15,372 gal***		
Actual Worst Case Discharge (barrels) calculated from Worst Case			366.00		
Actual Worst Case Discharge (gallons) calculated from Worst Case			15372		
Capacity of Largest Above Ground Storage Tank (bbls/gals): ***2,551***					
Name of Affected Waterway(s)/Protected Waterway(s)/Environmentally Sensitive Area (A): ***Smith Gully, Cedar Bayou***					
Distance from Facility:					
Resposne Contractor(s): ***Garner Environmental Services, Inc.***					

Yes	No	
√		Standard Response Plan Cover Sheet Submitted with Plan.
√		Emergency Response Action Plan Submitted with Plan or as Separate Part of Plan.
	√	Facility Response Plan Follows 40 CFR 112 Appendix F Format.

III. FRP Applicability [40 CFR 112.20 (f)(1)]				
√	The facility transfers oil over water to or from vessels and has a total oil storage capacity greater or equal to 42,000 gallons.			
	-OR-			
	The facility's total oil storage is greater than or equal to 1 million gallons, and one of the following is true:			
	The facility does not have secondary containment for each aboveground storage area sufficienty large to contain the capacity of the			
√	The facility is located at a distance such that a discharge from the facility could cause injury to fish and wildlife and sensitive			
	The facility is located at a distance such that a discharge from the facility would shut down a public drinking water intake.			
	The facility has had a reportable spill in an amount greater than or equal to 10,000 gallons with in the last 5 years.			
	Substantial Harm Facility	√	Significant and Substantial Harm Facility	
Reviewed by:	Mike Clonts		Date:	3/15/2012
FRP Status:			Date:	
Approved by:			Date:	

NOTE: The following checklist items correspond to the final regulations as outlined in 40 CFR 112.20, Appendix F. For all checklist items, indicate FRP adequacy as follows:

Facility Response Plan
Plan Review Checklist
For Verifying Compliance with Facility Response Plan Requirements

Activity Information		
Activity Type		FRP Plan Review
Reason for Review		Initial Plan Submittal (new FRP)
		5-year Review
		Plan Amendment (note type)
	√	Other (note other reason)
		Note: ***Response to inspection review. Plan totally re-written by The WCM Group.***
Activity Date		5/30/2012
EPA Inspector		***Mike Clonts/Don Smith***

112.20(h)(11)	A. Response Plan Cover Sheet (sec. 2.0)	YES	NO		N/A
	General Information (sec 2.1)				
	Facility name	√			
	Facility address	√			
	Facility telephone number	√			
	Mailing address (if different from facility address)	√			
	Facility owner/operator and address **(recommended)**	√			
	Facility owner telephone **(recommended)**	√			
	Dun & Bradstreet number		√		
	Longitude (degrees, minutes, seconds)	√			
	Latitude (degree, minutes, seconds)	√			
	North American Industrial Classification System (NAICS) code		√		
	Facility start up date **(recommended)**		√		
	Facility acres **(recommended)**		√		
	Name of protected waterway or environmentally sensitive area		√		
	Distance to navigable water		√		
	Worst case discharge amount (gallons)	√			
	Maximum oil storage capacity (gallons)		√		
	Largest aboveground storage tank (AST) capacity (gallons)		√		

	Total number of ASTs		√		
	Total number of underground storage tanks (USTs)		√		
	Total UST storage		√		
	Total storage of drums and transformers that contain oil		√		
	Number of surface impoundments and total storage of surface impoundments				√
	Applicability of Substantial Harm Criteria (sec.2.2)				
	Attachment C-1 with answer to each applicability question	√			
	Documentation of reliability and analytical soundness of alternate formula				√
Please use the following space to note any missing or incomplete information.					
	Certification (sec. 2.3)				
	Plan holder certification is included (contains signature, title, and date)	√			
Please use the following space to note any missing or incomplete information.					
	Verification of Contract (sec. 2.4)				
	Plan holder certification is included (contains signature, title, and date)	√			
Please use the following space to note any missing or incomplete information. *The items checked "NO" above, are not addressed or inadequately addressed in*					

FRP 06-TX-00525
Enterprise Products Operating LLC, East Storage/Splitter III

112.20(h)(1)	**B. Emergency Response Action Plan (ERAP) (sec. 1.1)**	YES	NO	N/A	N/A
112.20(h)(1)	Separate Section of FRP		√		
112,20(h)(1)(i),	Qualified Individual (QI) Information (sec. 1.2)		√		
112,20(h)(1)(ii),	Emergency Notification List (sec. 1.3.1)		√		
	Spill Response Notification Form (sec. 1.3.1)	√			
112.20(h)(1)(iv)	Response Equipment List and Location (sec. 1.3.2)		√		
112.20(h)(1)(iv)	Response Equipment Testing and Deployment (sec. 1.3.4)		√		
112.20(h)(1)(v)	Facility Response Team List (sec. 1.3.4)		√		
112.20(h)(1)(vi)	Evacuation Plan (sec. 1.3.5)				
112.20(h)(1)(vii)	Immediate Actions (sec. 1.7.1)	√			
112.20(h)(1)(viii)	Facility Diagrams (sec. 1.9)		√		
	*The sections above should be extracted from the more detailed corresponding sections of the plan.				
Please use the following space to note any missing or incomplete information in the ERAP. *See corresponding sections of this checklist for information on*					

112.20(h)(2)	**C. Facility Information (sec. 1.2)**	YES	NO	N/A	N/A
	Facility name (sec. 1.2.1)	√			
	Street address	√			
	City, state, zip code	√			
	County		√		
	Phone number	√			

	Latitude/longitude (sec. 1.2.2)	√			
	Wellhead protection area (sec. 1.2.3)		√		
	Owner/operator (both names included, if different) (sec. 1.2.4)	√			
	QI Information (sec. 1.2.5)	√			
	-Name, position, street address, phone numbers	√			
	- Description of specific response training experience		√		
	Oil storage start-up date (sec. 1.2.6)		√		
	Facility operations description (sec. 1.2.7)	√			
	North American Industrial Classification System (NAICS) or Standard Industrial Classification code (SIC)		√		
	Dates and types of substantial expansion (sec. 1.2.8)		√		
Please use the following space to note any missing or incomplete information in Section 1.2 of the Plan and, to the extent possible, assess the accuracy of the					

112.20(h)(1) and (3)	**D. Emergency Response Information (sec. 1.3)**	YES	NO	N/A	N/A
	Notification (sec. 1.3.1)				
	Emergency Notification Phone List		√		
	National Response Center phone number	√			
112.20(h)(1)(i)	QI (day and evening) phone numbers	√			
	Company response team (day and evening) phone numbers	√			
	Federal On-Scene Coordinator (OSC) and/or Regional Response Center (day and evening) phone numbers	√			
	Local response team phone numbers (fire department/cooperatives)	√			
	Fire marshal (day and evening) phone numbers	√			
	State emergency response phone number(s)	√			
	State Police phone number		√		
	State Emergency Response Commission (SERC) phone number	√			
	Local emergency planning committee (LEPC) phone number	√			
	Wastewater treatment facility(s) name and phone number (**recommended**)		√		
	Local water supply system (day and evening) phone numbers		√		
	Weather report phone number	√			
	Local television/radio phone number(s) for evacuation notification	√			
112.20(h)(3)(i)	Spill response contractor(s)	√			
	Factories/Utilities with water intakes (**recommended**)		√		
	Trustees of sensitive areas (**recommended**)		√		
	Hospital phone number	√			
	Spill Response Notification Form				
	Reporter's name, position and phone number	√			
	Company information	√			

	Incident description (source/cause)	√			
	Material (were materials discharged?)	√			
	Response action (meeting federal obligations to report, calling for responsible party, time called)	√			
	Impact	√			
	Date/time of incident, incident address/location, nearest city/state/county/zip code, distance from city/units of measure/direction from city, township, range, borough, container type/tank oil storage capacity	√			
	Units of measure, facility oil storage capacity/units of measure, facility longitude and latitude	√			
Please use the following space to note any missing or incomplete information in Section 1.3 of the Plan. Please use to assess the accuracy of the information					
112.20(h)(1)(iv), 112.20(h)	**Response Equipment (sec 1.3.2)**				
	Equipment Information				
	Equipment list		√		
	Equipment location		√		
	Release handling capabilities and limitations (e.g., launching sites)		√		
Please use the following space to note any missing or incomplete information. *The items checked "NO" above, are not addressed or inadequately addressed in*					

112.20(h)(3)(vi)	**E. Response Equipment List (Identify if Facility, OSRO, CO-OP owned by letters O, F, or C) (sec. 1.3.2)**	YES	NO	N/A	N/A
	Skimmers/pumps (operational status, type/model/year, number or quantity, capacity, daily effective recovery rate, storage location)	O	F		
	Boom (containment boom: operational status, year, number, skirt size)	O	F		
	Boom (sorbent boom: operational status, type/model/year, number, size (length))	O	F		
	Chemical countermeasure agents stored	O	F		
	Sorbents (type, year purchased, amount, storage location)	O	F		
	Hand tools (type, quantity, storage location)	O	F		
	Communications equipment (operational status, type and year, quantity, storage location)	O	F		
	Fire Fighting and Personnel Protective Equipment	O	F		
	Boats and Motors (operational status, type, and year, quantity, storage location)	O	F		
	Other (e.g., heavy equipment, cranes, dozers, etc.) (operational status, type and year, quantity, storage location)	O	F		
	Equipment Location	O	F		
	Amount of oil that emergency response equipment can handle and limitations (e.g., launching sites) must be described.	O	F		
Please use the following space to note any missing or incomplete information. *The previous FRP indicated facility owned response equipment would be utilized*					

112.20(h)(8)(i) and (ii)	**F. Response Equipment Testing and Deployment Drill Log (sec. 1.3.3)**	YES	NO	N/A	N/A
	Date of last inspection or equipment test		√		
	Inspection Frequency		√		
	Date of Last Deployment		√		
	Deployment Frequency		√		

	OSRO Certification (Note: Facilities without facility owned response equipment must ensure that the Oil Spill Removal Organization that is identified in the response plan to provide this response equipment certifies that the deployment exercises have been met)		√		
Please use the following space to note any missing or incomplete information in Section 1.3.3 of the Plan and verify that the log information is up-to-date during the					

FRP 06-TX-00535
Enterprise Products Operating LLC, East Storage/Splitter III

	G. Personnel (sec. 1.3.4)	YES	NO	N/A	N/A
112.20(h)(3)(v), 112.20(h)	**Emergency Response Personnel Information** (Personnel whose duties involve responding to emergencies, including oil discharges, even				
	Response personnel name(s)	√			
	Facility response team title/position	√			
	Response personnel phone numbers (work/home, other)	√			
	Response personnel response time		√		
	Response personnel responsibility	√			
	Response personnel training (type and date)	√			
112.20(h)(3)(i)	**Emergency Response Contractor Information**		√		
	Response contractor name (s)	√			
	Response contractor phone numbers	√			
	Response contractor response time		√		
112.20(h)(3)(ii)	Response contractor evidence of contractual arrangements	√			
	Facility Response Team Information (Composed of Emergency Response Personnel and Emergency Response that will respond				
	Response team member name(s)	√			
	Response team member job function	√			
	Response team member response time		√		
	Response team member phone/pager number	√			
	Name of emergency response contractor (contractors providing facility response team services may be different than contractors providing oil spill response services)	√			
	- Response time		√		
	- Phone/pager	√			
Please use the following space to note any missing or incomplete information in Section 1.3.4 of the Plan. ***The items checked "NO" above, are not addressed or***					

112.20(h)(1)(vi),	H. Evacuation Plans (sec. 1.3.5)	YES	NO	N/A	N/A
	Facility Evacuation Plan (sec. 1.3.5.1)				
	Location of stored materials		√		
	Hazard imposed by spilled materials		√		
	Spill flow direction		√		
	Prevailing wind directions and speed		√		
	Water currents, tides, or wave conditions (if applicable)		√		
	Arrival route of emergency response personnel and response equipment		√		
	Evacuation routes		√		

FRP 06-TX-00525
Enterprise Products Operating LLC, East Storage/Splitter III

	Alternative routes of evacuation		√		
	Transportation of injured personnel to nearest emergency medical facility		√		
	Location of alarm/notification systems		√		
	Centralized check-in area for roll call		√		
	Mitigation command center location		√		
	Location of shelter at facility		√		
112.20(h)(3)(vii),	Community Evacuation Plans referenced (sec. 1.3.5.3)		√		
Please use the following space to note any missing or incomplete information in Section 1.3.5 of the plan and to assess the accuracy of the information provided					

112.20(h)(3)(ix)	**I. Qualified Individual's Duties (sec. 1.3.6)**	YES	NO	N/A	N/A
112.20(h)(3)(ix)(A)	Activate internal alarms and hazard communication systems	√			
112.20(h)(3)(ix)(B)	Notify Response Personnel	√			
112.20(h)(3)(ix)(C)	Identify character, exact source, amount, and extent of the release	√			
112.20(h)(3)(ix)(D)	Notify and provide information to appropriate Federal, State and local authorities	√			
112.20(h)(3)(ix)(E)	Assess interaction of spilled substance with water and/or other substances stored at facility and notify on-scene response personnel of assessment	√			
112.20(h)(3)(ix)(F)	Assess possible hazards to human health and the environment	√			
112.20(h)(3)(ix)(G)	Assess and implement prompt removal actions	√			
112.20(h)(3)(ix)(H)	Coordinate rescue and response actions	√			
112.20(h)(3)(ix)(I)	Access company funding to initiate cleanup activities	√			
112.20(h)(3)(ix)(J)	Direct cleanup activities	√			
Please use the following space to note any missing or incomplete information.					

112.20(h)(4)	**J. Hazard Evaluation (sec. 1.4)** *(See Section II, Appendix A)*	YES	NO	N/A	N/A
	Hazard Identification (sec. 1.4.1)				
	Tank Above Ground and Below Ground				
	Tanks (List Tanks by Number, Product and Shell Capacity in the space below)				
	Tank number(s)		√		
	Substance(s) stored		√		
	Quantity(s) stored		√		
	Tank type(s)/year(s) of construction		√		
	Shell capacity(s)		√		
	Failure(s)/cause(s)		√		
	Surface Impoundments (SI)				
	SI Number(s)				√
	Substance(s) Stored				√
	Quantity(s) Stored				√
	Surface area(s)/year(s) of construction				√

	Maximum capacity(s)				√
	Failure(s)/cause(s)				√
	Labeled schematic drawing	√			
	Description of transfers (loading and unloading) and volume of material	√			
	Description of daily operations	√			
	Secondary containment volume(s)		√		
	Normal daily throughput of the facility	√			
Please use the following space to note any missing or incomplete information in Section 1.4.1 of the plan and to assess the accuracy of the information in Section					

112.20(h)(4)	**K. Vulnerability Analysis (sec. 1.4.2)** (See Appendix A - Calculation of the Planning Distance)	YES	NO	N/A	N/A
	Analysis of potential effects of an oil spill on vulnerable areas. (Attachment C-III to Appendix C to this part provides a method that owners or				
	Water intakes (drinking, cooling or other)		√		
	Schools		√		
	Medical facilities		√		
	Residential areas		√		
	Businesses		√		
	Wetlands or other sensitive environments		√		
	Fish and wildlife		√		
	Lakes and streams		√		
	Endangered flora and fauna		√		
	Recreational areas		√		
	Transportation routes (air, land, and water)		√		
	Utilities		√		
	Other applicable areas of economic importance (list below)		√		
Please use the following space to note any missing or incomplete information in Section 1.4.2 of the plan and to assess the accuracy of the information based on field					

112.20(h)(4)	**L. Analysis of the Potential for an Oil Spill (sec. 1.4.3)**	YES	NO	N/A	N/A
	Description of likelihood of release occurring	√			
	Oil spill history for the life of the facility	√			
	Horizontal range of potential spill		√		
	Vulnerability to natural disaster		√		
	Tank age		√		
	Other factors (e.g., unstable soils, earthquake zones, Karst topography, etc.)		√		
Please use the following space to note any missing or incomplete information in Section 1.4.3 of the Plan and to assess the accuracy of the information based on field					

112.20(h)(4)	**M. Facility Reportable Oil Spill History Description (sec. 1.4.4)**	YES	NO	N/A	N/A

	Date of discharge(s)	√			
	List of discharge causes	√			
	Material(s) discharged	√			
	Amount of discharges (gallons)	√			
	Amount that reached navigable waters (if applicable)	√			
	Effectiveness and capacity of secondary containment	√			
	Clean-up actions taken	√			
	Steps taken to reduce possibility of reccurrence	√			
	Total oil storage capacity of tank(s) or impoundment(s) from which material discharged	√			
	Enforcement actions	√			
	Effectiveness of monitoring equipment	√			
	Description(s) of how each oil discharge was detected	√			
Please use the following space to note any missing or incomplete information in Sectio 1.4.4 of the Plan.					

	N. Discharge Scenarios (sec. 1.5)	YES	NO	N/A	N/A
	Small Discharges (sec. 1.5.1) (Description of small discharges addressing facility operations and components including but not limited to				
	Loading and unloading operations				√
	Facility maintenance operation				√
	Facility piping	√			
	Pumping stations and sumps	√			
	Oil storage location	√			
	Vehicle refueling operations				√
	Age and condition of facility components		√		
	Small volume discharge calculation for a facility	√			
	Facility-specific spill potential analysis		√		
	Average most probable discharge for complexes	√			
	1,000 feet of boom (1 hour deployment time)		√		
	Correct amount of boom for complexes		√		
	Oil recovery devices equal to small discharge (2 hour recovery time)	√			
	Oil storage capacity for recovered material	√			
	Scenarios Affected by the Response Efforts (sec. 1.5.1.2)				
	Size of the discharge	√			
	Proximity to downgradient wells, waterways, and drinking water intakes		√		
	Proximity to fish and wildlife and sensitive environments		√		
	Likelihood that the discharge will travel offsite (i.e., topography, drainage)	√			
	Location of the material discharged (i.e., on a concrete pad or directly on the soil)		√		
	Material discharged	√			

	Weather or aquatic conditions (i.e., river flow)	√	√		
	Available remediation equipment	√			
	Probability of a chain reaction of failures		√		
	Direction of discharge pathway		√		
	Medium Discharges (sec. 1.5.1) (Description of medium discharges scenarios addressing facility operations and components including but				
	Loading and unloading operations				√
	Facility maintenance operation				√
	Facility piping				√
	Pumping stations and sumps	√			
	Oil storage location				√
	Vehicle refueling operations				√
	Age and condition of facility components		√		
	Medium volume discharge calculation for a facility	√			
	Facility-specific spill potential analysis		√		
	Maximum most probably discharge for complexes	√			
	Oil recovery devices equal to medium discharge	√			
	Availability of sufficient quantity of boom	√			
	Oil storage capacity for recovered material	√			
	Scenarios Affected by the Response Efforts (sec. 1.5.1.2)				
	Size of the discharge	√			
	Proximity to downgradient wells, waterways, and drinking water intakes		√		
	Proximity to fish and wildlife and sensitive environments		√		
	Likelihood that the discharge will travel offsite (i.e., topography, drainage)		√		
	Location of the material discharged (i.e., on a concrete pad or directly on the soil)		√		
	Material discharged	√			
	Weather or aquatic conditions (i.e., river flow)		√		
	Available remediation equipment	√			
	Probability of a chain reaction of failures		√		
	Direction of discharge pathway		√		
Please use the following space to note any missing or incomplete information in Section 1.5.1 of the Plan and to assess the accuracy of the information provided					

112.20(h)(5)(i)	**O. Worst Case Discharge (sec. 1.5.2)** (See Appendix A) (When planning for the worst case discharge response all of the factors listed in the small and medium discharge section of the response plan shall be addressed)	YES	NO	N/A	N/A
	Facility Specific Worst Case Discharge Scenario		√		
	Description of worst case discharges scenarios addressing facility operations and components including but not limited to (sec.				
	Loading and unloading operations				√

	Facility Maintenance Operation				√
	Facility Piping				√
	Pumping stations and sumps	√			
	Oil storage location				√
	Vehicle refueling operations				√
	Age and condition of facility components		√		
112 Appendix D	Correct Worst Case Discharge (WCD) calculation for specific type of facility	√			
	Correct WCD calculation for complexes	√			
112 Appendix E	Sufficient response resources for WCD	√			
	Sources and quantity of equipment for response to WCD	√			
	Oil storage capacity for recovered material	√			
	Scenarios Affected by the Response Efforts (sec. 1.5.1.2)				
	Size of the discharge	√			
	Proximity to downgradient wells, waterways, and drinking water intakes		√		
	Proximity to fish and wildlife and sensitive environments	√			
	Likelihood that the discharge will travel offsite (i.e., topography, drainage)	√			
	Location of the material discharged (i.e., on a concrete pad or directly on the soil)	√			
	Material discharged	√			
	Weather or aquatic conditions (i.e., river flow)	√			
	Available remediation equipment	√			
	Probability of a chain reaction of failures		√		
	Direction of discharge pathway	√			
Please use the following space to note any missing or incomplete information in Section 1.5.2 of the Plan and to assess the accuracy of the information provided					

112.20(h)(6)	**P. Discharge Detection Systems (sec. 1.6)**	YES	NO	N/A	N/A
	Discharge Detection by Personnel (sec. 1.6.1)				
	Description of procedures and personnel for spill detection		√		
	Description of facility inspections		√		
	Description of initial response actions		√		
	Emergency Response Information (referenced)		√		
Please use the following space to note any missing or incomplete information in Section 1.6.1 of the plan. *The items checked "NO" above, are not addressed or*					
Section II,	**Automated Discharge Detection (sec. 1.6.2)**		√		
	Description of automatic spill detection equipment, including overfill alarms and secondary containment sensors		√		
	Description of alarm verification procedures and subsequent actions		√		
	Initial response actions		√		
Please use the following space to note any missing or incomplete information in Section 1.6.2 of the Plan. *The items checked "NO" above, are not addressed or*					

112.20(h)(7), Appendix E	Q. Plan Implementation (sec. 1.7)	YES	NO	N/A	N/A
	Identification of response resources for small, medium, and worst case spills (sec. 1.7.1)				
	Description of response actions	√			
	Accessibility of proper response personnel and equipment	√			
	Emergency plans for spill response	√			
	Additional response training	√			
	Additional contracted help	√			
	Access to additional response equipment/experts	√			
	Ability to implement plan, including response training and practice drills	√			
	Temporary storage	√			
	Recommended form detailing immediate action for small, medium and Worst Case spills (sec. 1.7.1.2A) (stop the product flow, warn personnel, shut off ignition sources, initiate containment, notify NRC, notify OSC, notify (as appropriate))	√			
Please use the following space to note any missing or incomplete information in Section 1.7.1 of the Plan.					
	Disposal Plan (sec. 1.7.2)				
	Description of procedures for recovering, reusing, decontaminating or disposing of materials		√		
	Materials addressed in Disposal Plan (recovered product, contaminated soil, contaminated equipment and materials (including drums tank parts, valves and shovels), personnel protective equipment, decontamination solutions, absorbents, spent chemicals))		√		
	Plan prepared in accordance with any federal, state, and/or local regulations		√		
	Plan addresses permits required to transport or dispose of recovered materials		√		
Please use the following space to note any missing or incomplete information in Section 1.7.2 of the Plan.					
Section II, 112.7(e)(1),	**Containment and Drainage Planning (sec. 1.7.3)**				
	Description of containing/controlling a spill through drainage		√		
	Containment and drainage plan available		√		
	Available volume of containment		√		
	Drainage route from oil storage and transfer areas		√		
	Construction materials used in drainage troughs		√		
	Type and number of valves and separators in drainage system		√		
	Sump pump capacities		√		
	Containment capacities of weirs and booms and their location		√		
	Other cleanup materials		√		
Please use the following space to note any missing and incomplete information in Section 1.7.3 of the Plan and to assess the accuracy of the information provided					

	R. Self-Inspection, Training, and Meeting Logs (sec. 1.8)	YES	NO	N/A	N/A
	Facility Self-Inspection (sec. 1.8.1)				
Section II, 112.7(e)(8)	Records of tank inspections with dates (tank leaks, tank foundations, tank Piping) contained or cross-referenced in Plan or maintained electronically for five years		√		

Section II, 112.7(e)(8)	Records of secondary containment inspections with dates (dike or berm system, secondary containment, retention and drainage ponds) contained or cross-referenced in Plan or maintained electronically for five years	√			
	Enterprise Products Operating LLC, East Storage/Splitter III				
112.20(h)(8)(i)	Response equipment inspection				
	Response equipment checklist (sec. 1.8.1.2)		√		
	Equipment inventory (item and quantity)		√		
	Storage location (time to access and respond)		√		
	Accessibility (time to access and respond)		√		
	Operational status/condition		√		
	Actual use/testing (last test date and frequency of testing)		√		
	Shelf life (present age, expected replacement date)		√		
	- Inspection date		√		
	- Inspector's signature		√		
	- Inspection records maintained for 5 years		√		
	- Response equipment inspection log (inspector, date, comments)		√		
Please use the following space to note any missing or incomplete information in Section 1.8 of the Plan and to assess the accuracy of the information. *The items*					
	Facility Drills/Exercises (sec. 1.8.2)				
	Description of drill/exercise program based on National Preparedness for Response Exercise Program (PREP) guidelines or other comparable program	√			
	- If "no" alternative program has been approved by EPA RA (describe program below)				√
	QI notification drill				√
	Spill management team tabletop exercise				√
	Equipment deployment exercise				√
	Unannounced exercise				√
	Area exercise				√
	Description of evaluation procedures for drill program				√
	Qualified Individual notification drill log (sec. 1.8.2.1)				
	Date, company, qualified individual, other contacted, emergency scenario, evaluation	√			
	Spill management team tabletop drill log (sec. 1.8.2.2)				
	Date, company, QI, participants, emergency scenario, evaluation, changes to be implemented, time table for implementation	√			
Please use the following space to note any missing or incomplete information in Section 1.8.2 of the Plan and to assess the accuracy of the information provided					
	Response Training (sec. 1.8.3)				
	Description of response training program (including topics)	√			
	Personnel response training logs (name, response training date/and number of hours, prevention training date/and number of hours)	√			
	Discharge prevention meeting logs (date, attendees)	√			
Please use the following space to note any missing or incomplete information in Section 1.8.3 of the Plan and verify that the log information is up-to-date during the					

	S. Diagrams (sec. 1.9)	YES	NO	N/A	N/A
	Site Plan Diagram *Enterprise Products Operating LLC, East Storage/Splitter III*				
	Entire facility to scale	√			
	Above and below-ground storage tanks		√		
	Contents and capacities of bulk oil storage tanks		√		
	Contents and capacities of drum storage areas				√
	Contents and capacities of surface impoundments				√
	Process buildings	√			
	Transfer areas		√		
	Location and capacity of secondary containment systems		√		
	Location of hazardous materials		√		
	Location of communications and emergency response equipment		√		
	Location of electrical equipment that might contain oil	√			
	If the facility is a complex facility, the interface between EPA and other regulating agencies				√
Please use the following space to note any missing or incomplete information in the Site Plan diagram and to assess the accuracy of the diagram based on field					
	Site Drainage Plan Diagram				
	Major sanitary and storm sewers, manholes, and drains		√		
	Weirs and shut-off valves		√		
	Surface water receiving streams	√			
	Fire fighting water sources		√		
	Other utilities		√		
	Response personnel ingress and egress		√		
	Response equipment transportation routes		√		
	Direction of spill flow from discharge points		√		
Please use the following space to note any missing or incomplete information in the Site Drainage Plan diagram and to assess the accuracy of the diagram based on					
	Site Evacuation Plan Diagram				
	Site plan diagram with evacuation routes		√		
	Location of evacuation regrouping areas		√		
Please use the following space to note any missing or incomplete information in the Site Evacuation Drainage Plan diagram and to assess the accuracy of the					

Section II, 112.7(e)(9)	T. Site Security (sec. 1.10)	YES	NO	N/A	N/A
	• Description of facility security		√		
	(Emergency cut-off locations, enclosures, guards and their duties, lighting, valve and pump locks, pipeline connection caps)		√		
Please use the following space to note any missing or incomplete information in Section 1.10 of the plan and to assess the accuracy of the information provided based					

Please use the following space to describe overall impressions of the facility response plan (i.e., functional, workable). A set of questions is provided in Appendix C to	

Reviewed by:	*Mike Clonts/Don Smith*
Date:	*5/30/2012*

FRP-06-TX-00525

Enterprise Products Operating LLC, East Storage/Splitter III

Facility Response Plan Field Inspection Checklist

Activity Information	
Activity Type	*FRP Field Inspection*
Activity Date	**3/15/2012**
EPA Inspector	*Don Smith*

Facility Information								
Facility ID:	FRP Harm Category?	√	Substantial Harm					
		√	Significant & Substantial Harm					
FRP ID:	Complex?		Yes	√	No			
	If Complex, Shared Jurisdiction?		Yes		No	√	N/A	
Facility Name:	*East Storage/Splitter III*							
Address:	*316 S. Main*							
City:	*Mont Belvieu*							
State:	*TX*						Zip: *77580*	
Owner/Operator:	*Enterprise Products Operating LLC*							
FRP Contact:	*Jon Fields*							
Telephone:	*281-385-4300*							
Email:	jefields@eprod.com							
QI:	*Brenda Ganter*							
Telephone:	*281-385-0510*							
Email:	bganter@eprod.com							
Notes/Comments: (Include County name)								

112.20(h), 112 Appendix F Section 1.0	A. General	YES	NO	N/A
112 Appendix F Section 1.0	Copy of FRP is available at the facility	√		

112.20(h)(1), 112 Appendix F Section 1.1	Copy of Emergency Response Action Plan is available at the facility.	√		
112.20(h)(1)(vi), 112.20(h)(3)(vii), 112 Appendix F Section 1.3.5	Evacuation plan is readily available.	√		
Describe how the facility incorporates the FRP into its overall training program:				
Notes				

112.20(h), 112 Appendix F Section 1.3.1	**B. Spill Notification**	**YES**	**NO**	**N/A**
112,20(h)(1)(ii), 112.20(h)(3)(iii), 112 Appendix F Section 1.3.1	Spill notification call-down list contains correct telephone numbers.	√		
112,20(h)(1)(ii), 112.20(h)(3)(iii), 112 Appendix F Section 1.3.1	Emergency contact information has been verified as current.	√		
Notes				

112.20(h)(4), 112 Appendix F Section 1.4	**C. Hazard Evaluation**	**YES**	**NO**	**N/A**
112 Appendix F	Facility total storage capacity corresponds to storage capacity reported in the	√		

Section 1.4.1	plan			
112 Appendix F Section 1.4.1	Secondary containment is adequate for all aboveground tanks	✓		
112 Appendix F Sections 1.4.2 and 1.4.3	Following factors affecting response efforts are properly addressed / characterized:			
	- Discharge volume		✓	
	- Proximity to downgradient water		✓	
	- Proximity to fish and wildlife and sensitive environments		✓	
	- Proximity to drinking water intakes		✓	
	- Likelihood that discharge will travel offsite		✓	
	- Location of material spilled (i.e., on concrete pad or soil)		✓	
	- Type of material discharged		✓	
	- Weather or aquatic conditions anticipated during adverse conditions		✓	
	- Available remediation equipment		✓	
	- Probability of chain reaction or failures		✓	
	- Direction of spill		✓	
112 Appendix F Section 1.4.4	History of all reportable discharges at the facility is maintained with the FRP	✓		

Notes: ***The Plan should describe the planning scenario, considering the reasonably expected circumstances of a discharge that would affect the response efforts required. This would include any circumstances the may have not been addressed in the Plan (see comment under Discharge Scenarios below).***

112 Appendix F Section 1.5	D. Discharge Scenarios	YES	NO	N/A
112.20(h)(5)(i), 112 Appendix F Section 1.5.2	Worst-case discharge scenario described in Plan is accurate (e.g., source and impacts)		✓	
112 Appendix F Section 1.5.1	Medium discharge scenario described in Plan is accurate (e.g., source and impacts)	✓		
112 Appendix F Section 1.5.1	Small discharge scenario described in Plan is accurate (e.g., source and impacts)	✓		

Notes

Please clarify the WCD volume in the event the automatic well shut-off fails, including how the wells will be controlled (manual?) and the volumetric difference from the calculation presented in the Plan.

112.20(h)(1) and (h)(3)(ix), 112 Appendix F Sections 1.3.6 and 1.6	E. Response Personnel	YES	NO	N/A
112.20(h)(1)(i), 112 Appendix F Section 1.2	Qualified Individual (QI) information (name, title, telephone numbers) is current	√		
112.20(h)(3)(ix), 112 Appendix F Section 1.3.6	QI is aware of, and prepared to fulfill, responsibilities:	√		
112.20(h)(3)(ix)(A), 112 Appendix F Section 1.3.6	- Activate internal alarms and hazard communication systems	√		
112.20(h)(3)(ix)(B), 112 Appendix F Section 1.3.6	- Notify response personnel	√		
112.20(h)(3)(ix)(C), 112 Appendix F Section 1.3.6	- Identify character, exact source, amount, and extent of the release	√		
112.20(h)(3)(ix)(D), 112 Appendix F Section 1.3.6	- Notify and provide information to appropriate Federal, State, and local authorities	√		
112.20(h)(3)(ix)(E), 112 Appendix F Section 1.3.6	- Assess interaction of substances with water and/or other substances stored at facility and notify on-scene response personnel of assessment	√		
112.20(h)(3)(ix)(F), 112 Appendix F Section 1.3.6	- Assess possible hazards to human health and the environment	√		
112.20(h)(3)(ix)(G), 112 Appendix F Section 1.3.6	- Assess and implement prompt removal actions	√		
112.20(h)(3)(ix)(H), 112 Appendix F Section 1.3.6	- Coordinate rescue and response actions	√		
112.20(h)(3)(ix)(I), 112 Appendix F Section 1.3.6	- Access company funding to initiate cleanup activities	√		

112.20(h)(3)(ix)(J), 112 Appendix F Section 1.3.6	- Direct cleanup activities	√		
112 Appendix F Section 1.2	QI has specific response training experience	√		
112 Appendix F Section 1.6	Facility personnel are familiar with procedures for detecting a discharge	√		
Notes				

112.20, 112 Appendices E and F	**F. Response Equipment**	**YES**	**NO**	**N/A**
112 Appendix E Section 3.0	Required response resources for a small discharge are provided.	√		
112 Appendix E Section 3.3.1	- 1,000 ft of boom and, if marine transfer facility, boom equal to twice the length of largest vessel	√		
112 Appendix E Section 3.3.1	- Capacity of deploying boom within 1 hour of small discharge	√		
112 Appendix E Section 3.3.2	- Response equipment capable of being deployed within 2 hours of a small discharge	√		
112 Appendix E Section 3.3.2	- Response equipment daily recovery capacity equal to the total volume of small discharge	√		
112 Appendix E Section 12.2	- Temporary storage capacity equal to twice the volume of the small discharge	√		
112 Appendix E Section 4.0	Required response resources for a medium discharge are provided:	√		
112 Appendix E Section 4.5	- Sufficient quantities of boom for containment and collection and for protection	√		
112 Appendix E Section 4.4	- Response equipment daily recovery capacity equal to 50% of total volume of small discharge	√		
112.20(h)(3)(ii), 112 Appendix F Section 1.3.4	Facility has current signed contract with response contractor and/or membership in cleanup co-op.	√		

	- If YES, facility has evidence of contractor's equipment deployment exercises (annually)			
112.20, 112 Appendix F	Facility has its own response equipment.	√		
112.20(h)(8)(i) and (ii), 112 Appendix F Section 1.3.3, 112 Appendix F Section 1.8.1.2	- If YES, facility response equipment is regularly inspected (check logs)	√		
112 Appendix F Section 1.3.2	Following equipment is provided and, if so, is operational, accessible, and has adequate capacity:	√		
112 Appendix F Section 1.3.2(1)	- Skimmers		√	
112 Appendix F Section 1.3.2(1)	- Pumps	√		
112 Appendix F Section 1.3.2(2)	- Containment booms	√		
112 Appendix F Section 1.3.2(5)	- Sorbents	√		
112 Appendix F Section 1.3.2(3)	- Chemical countermeasures			√
112 Appendix F Section 1.3.2(7)	- Communication equipment	√		
112 Appendix F Section 1.3.2(8)	- Firefighting equipment	√		
112 Appendix F Section 1.3.2(8)	- Personal protective equipment	√		
112 Appendix F Section 1.3.2(9)	- Other equipment, boots, motors, etc.	√		
112 Appendix F Section 1.7.2	Procedures have been established for recovering, reusing, decontaminating or disposing of materials	√		

Notes

The Plan indicates the facility does not maintain spill response equipment, and OSRO's will respond to a Worst Case Discharge. Enterprise maintains two response trailers containing equipment that may be utilized in the event of a discharge.

112 Appendix F	**G. Self Inspection**	**YES**	**NO**	**N/A**

Section 1.8.1	G. Self Inspection	YES	NO	N/A
112 Appendix F Section 1.8.1	Records of tank inspections are maintained (check last 5 years of records)	√		
	The following industry standard(s) are used to inspect aboveground bulk storage containers:	√		
	- Steel Tank Institute (STI) SP-1			√
	- American Petroleum Institute (API) Standard 653			√
	- Hybrid program developed by Professional Engineer			√
	- Other (specify in notes/comments section below)			√
112 Appendix F Section 1.8.1	Records of secondary containment inspections are maintained (check last 5 years of records)	√		
112.20(h)(6), 112 Appendix F Section 1.6	Automatic discharge detection/prevention systems are inspected/tested regularly (overfill alarms, secondary containment sensors)	√		
112 Appendix F Section 1.8.3	Discharge prevention meetings are held periodically (check last 5 years of records)	√		
Notes				

112.20(h)(8)(ii), 112.21, Appendix F Section 1.8.2	H. Drills/Exercises	YES	NO	N/A
112.21(c), 112 Appendix F Section 1.8.2	Facility drills/exercises program is based on National Preparedness for Response Exercise Program (PREP) Guidelines	√		
	- If NO, alternative program has been approved by the EPA RA.			√
	QI notification drills are performed (quarterly)			√
	Spill Management Team Tabletop Exercises are performed (annually)			√

	Facility Equipment Deployment Exercises are performed (semi-annually)			√
	Unannounced Exercises are performed (annually)			√
	Area Exercises are performed			√
Notes				

112.20(h)(9), 112 Appendix F Section 1.9	**I. Diagrams**	**YES**	**NO**	**N/A**
112 Appendix F Section 1.9(1)	Site plan diagram appears to accurately represent the facility	√		
112 Appendix F Section 1.9(2)	Drainage plan appears to accurately represent the facility	√		
Notes				

Field Notes	
Area	**Notes/Remarks**

Photo Documentation Log	
Photo Number	**Description (include date, location and direction)**
	See separate Photo Documentation Log

Government Initiated Unannounced Exercise (GIUE) Preparation and Implementation Checklist

Activity Information	
Activity Type	GIUE Preparation
Activity Date	
EPA Evaluator	

Facility Information

Facility ID:				FRP Harm Category?		Substantial Harm	
						Significant & Substantial Harm	
FRP ID:				Complex?		YES	NO
Facility Name:							
Address:							
City:		State:		ZIP:			
Owner/Operator:							
FRP Contact:				Telephone:			

Notes/Comments: (Include County name)

GIUE Facility Selection

Response Jurisdiction:		U.S. Coast Guard		U.S. EPA
Regionally Specific Concerns:		High volume port		
		Areas of economically sensitive concerns		
		Proximity to agricultural intakes		
		Proximity to residential intakes		
		Proximity to power plant intakes		
		Homeland security issues		
		Sector/Environmental Justice issues		
FRP Approved?		YES		NO
OSRO Contractor?	YES	NO	Facility is:	
			Fully OSRO Dependent	
			Partially OSRO Dependent	
			Self Sufficient	

Names of nearby Navigable Waters:				
Tidal considerations or stream velocity considerations:				
Sensitive Environments (Check NCP, ACP, ESI maps):				
Pre-designated Boom Deployment:		YES		NO
ERAP is thorough and complete?		YES		NO
Other Concerns (e.g. waterbody considerations that may influence boom deployment methods and priorities):				

Scenarios Identified in FRP

Scenarios Identified in FRP	Small:
	Medium:
	Worst Case Discharge:
Actual Worst Case Discharge (barrels) calculated from Worst Case Dishcarge Worksheet :	366.00
Actual Worst Case Discharge (gallons) calculated from Worst Case Discharge Worksheet:	15372

Are scenarios realistic?		Yes		No
Are planned scenarios detailed enough to exercise?		Yes		No
Are Planning Distance Calculations complete?		Yes		No

If yes:	Planning Distance:	
	Actual Planning Distance (miles) calculated from Planning Distance Worksheet:	
	Affected Resources/Areas:	

GIUE Design and Preparation

Relevant facility information in the ERAP:

Specific locations for pre-deployment	Areas listed:	
	Equipment listed:	
OSRO/Facility Representatives	QI identified in the plan:	
	OSRO listed in plan:	
Types of oil (e.g. gasoline, diesel, asphalt):		
Specific Environmentally Sensitive Locations:		
Locations of:	Activities:	
	Boom Deployment:	
	Skimming/Recovery Operations:	
Protection Strategy to be implemented (e.g. deflection, protection, containment, U-shape, J-shape, emulsification):		
Specific RCP/ACP/NCP Considerations (e.g. drinking water intakes, cooling water intakes):		
FRP Scenarios	Small:	
	Medium:	
	Worst Case Discharge:	
Plans to modify scenario?	YES	NO
Note: If existing plan does not have sufficient detail, may need to develop scenario		
If yes:	Enter deviations from plan exercise scenario:	
	Describe rationale for modifying scenario:	

Activity Information	
Activity Type	**GIUE Implementation**
Activity Date	
EPA Evaluator	

Facility Information			
Facility ID			
Facility Response Plan (FRP) ID			
Facility Name			
Address			
City			
State			Zip:
Evaluators			
Date:		Start Time:	End Time:

A. Notifications		**YES**	**NO**	**COMMENTS**
112.20(h)(1)(ii);112.20(h)(3)(iii); 112 Appendix F, 1.3; 112 Appendix F, 1.7.1	Was notification list used?			
112.20(h)(1)(ii); 112.20(h)(3)(iii); 112 Appendix F, 1.3;112 Appendix F, 1.7.1	Did notification list include contacts identified in the Facility Response Plan?			
112.20(h)(1)(ii); 112.20(h)(3)(iii); 112 Appendix F, 1.3; 112 Appendix F, 1.7.1	Was State spill notification number utilized?			
112 Appendix F, 1.3(2)	Was National Response Center (NRC) notified?			
112.20(h)(1)(ii); 112.20(h)(3)(iii); 112 Appendix F, 1.3; 112 Appendix F, 1.7.1	Who conducted notifications?			
112.20(h)(1)(ii); 112.20(h)(3)(iii); 112 Appendix F, 1.3; 112 Appendix F, 1.7.1	Was notification list accurate and up to date? Indicate changes needed.			
112 Appendix F, 1.1	Was the FRP available on the premises?			

FRP Planning Distance Calculation Worksheet

40 CFR 112, Appendix C

The facility must evaluate whether the facility is located at a distance such that a discharge from the facility could cause injury to the environment or a public drinking water intake.

A regulated facility may meet substantial harm criteria without having to perform a planning distance calculation. The planning distance calculation is not necessary for facilities that have inadequate secondary containment or that have experienced a reportable spill in an amount greater than or equal to 10,000 gallons (238 barrels) within the past 5 years.

If more than one type of navigable water condition applies to a facility, then the facility is required to perform a planning distance calculation for each navigable water type to determine the greatest single distance that oil may be

I. Moving Navigable Water Calculation

☐ Not Applicable?

A) Planning Distance (miles) = PD = v * t * c (miles)
Chezy-Manning Equation (ft/s) = $v = (1.5/n) * r^{2/3} * s^{1/2}$

where:

n = Manning's Roughness Coefficient (Table 1, 40 CFR 112, Appendix C)	=	0.035	
r = Hydraulic Radius in ft (average mid-channel depth * 0.667)	=	6.003	feet
s = Average Slope of Moving Waterway (USGS Topo Map)	=	9.00E-05	
	v =	1.343	feet/second
t = Time Interval (hours) (Table 3, 40 CFR 112, Appendix C)	=	27	hours
c = Constant Conversion Factor	=	0.68	sec*mile / hr*ft
	Planning Distance =	24.66	miles

I. Oil Transport on Still Water

☐ Not Applicable?

A) Surface Area Covered by an Oil Spill (ft^2) = A_1
$A_1 = 10^5 * V^{3/4} * C$

where:

V = Worst Case Discharge Volume (gallons)	=	15372	gallons
C = Constant Conversion Factor	=	0.1643	
	A_1 =	22682208.87	$feet^2$

B) Spreading Formula (ft^2) = A_2

$A_2 = (\pi * r^2)/2$

Solving for the radius, r, using $A_1 = A_2$, then $r = [(2 * A_1)/\pi]^{1/2}$

r	=	3799.99	feet
r	=	0.72	miles

C) Total Planning Distance = Spreading Distance + 18.6 miles

	=	19.32	miles

Worst Case Discharge Worksheet

40 CFR 112, Appendix D

I. Single Tank Facilities

Not Applicable? ☐

The Tank's Capacity = _____ gallons

A) Secondary Containment is Adequate

The Worst Case Discharge is 80% of the Tank's Capacity = 0 gallons

B) Secondary Containment is not Adequate

The Worst Case Discharge is Equal to the Tank's Capacity = 0 gallons

II. Multiple Tank Facilities

Not Applicable? ☐

A) All Aboveground Storage Tanks (ASTs) Lack Adequate Secondary Containment

The Worst Case Discharge is Equal to the Total Capacity of all ASTs = _____ gallons

B) Some or All ASTs Have Adequate Secondary Containment

The Total Storage Capacity of ASTs Without Adequate Containment = 0 gallons

The Capacity of the Largest AST with Adequate Containment = 15372 gallons

The Worst Case Discharge is the Sum of the Above Capacities = 15372 gallons

The Worst Case Discharge Is 15372 gallons

366.00 barrels

Worksheet to Plan Volume of Response Resources for
40 CFR 112, Appendix E

I. Background Information

A) (A) = The Worst Case Discharge in Barrels = 366.00 barrels

B) Oil Group Designation (Section 1.2.3, 1.2.8, and 1.2.9) = 1

C) Operating Area (input "Rivers and Canals" or "Inland/Nearshore" or "Great Lakes")
= great lakes

D) Oil Percentages (Table 2)

Percent Natural Dissipation			(D1)	80
Percent Recovered Floating Oil			(D2)	20
Percent Oil Onshore			(D3)	10

E) (E1) = On-Water Oil Reco = 73.20 barrels
(E2) = Shoreline Recover = 36.60 barrels

F) (F) = Emulsification Facto = 1

G) On-Water Oil Recovery Resource Mobilization Factor (Table 4) =

Tier 1	(G1)	0.15
Tier 2	(G2)	0.25
Tier 3	(G3)	0.4

II. On-Water Oil Recovery Capacity (barrels/day)

Tier 1	Tier 2	Tier 3
10.98	18.30	29.28

III. Shoreline Cleanup Volume (barrels)

Shoreline Cleanup Volum = 36.60 barrels

IV. On-Water Response Capacity by Operating Area

Date of Facility First Operation (mm/dd/yyyy): 1/2/1990

Tier 1 (J1)	Tier 2 (J2)	Tier 3 (J3)
5000.00	10000.00	20000.00

V. On-Water Amount Needed to Be Identified but not Contracted for in Advance

Tier 1	Tier 2	Tier 3
-4989.02	-9981.70	-19970.72

U.S. EPA Facility Response Plan (FRP) -- Review Form

I. Facility Information

FRP Number: ***FRP-06-TX-00625***	Facility Name: ***East Storage/Splitter III***	
Facility Owner: ***Enterprise Products Operating LLC***		
Facility Operator (if different from owner):		
Mailing Address: ***316 S. Main, P. O. Box 573***		
City: ***Mont Belvieu***	State: ***TX***	Zip: ***77580-0573***
Telephone: ***281-385-0510***	Fax:	
Latitude: ***29.8380555***	Longitude: ***-94.891111***	
Other Description or Directions:		
Site Location Map Attached (Y/N) : ***N***		

II. Facility Overview

Date of Initial Facility Operation:			6/1/1995		
Total Storage Capacity (bbls/gals):			***105,435,036 gal***		# Of Tanks: ***6***
Worst Case Discharge (bbls/gals):			***15,372 gal***		
Actual Worst Case Discharge (barrels) calculated from Worst Case			366.00		
Actual Worst Case Discharge (gallons) calculated from Worst Case			15372		
Capacity of Largest Above Ground Storage Tank (bbls/gals): ***2,551***					
Name of Affected Waterway(s)/Protected Waterway(s)/Environmentally Sensitive Area (A): ***Smith Gully, Cedar Bayou***					
Distance from Facility:					
Resposne Contractor(s): ***Garner Environmental Services, Inc.***					

Yes	No	
√		Standard Response Plan Cover Sheet Submitted with Plan.
√		Emergency Response Action Plan Submitted with Plan or as Separate Part of Plan.
	√	Facility Response Plan Follows 40 CFR 112 Appendix F Format.

III. FRP Applicability [40 CFR 112.20 (f)(1)]				
√	The facility transfers oil over water to or from vessels and has a total oil storage capacity greater or equal to 42,000 gallons.			
	-OR-			
	The facility's total oil storage is greater than or equal to 1 million gallons, and one of the following is true:			
	The facility does not have secondary containment for each aboveground storage area sufficienty large to contain the capacity of the			
√	The facility is located at a distance such that a discharge from the facility could cause injury to fish and wildlife and sensitive			
	The facility is located at a distance such that a discharge from the facility would shut down a public drinking water intake.			
	The facility has had a reportable spill in an amount greater than or equal to 10,000 gallons with in the last 5 years.			
	Substantial Harm Facility	√	Significant and Substantial Harm Facility	
Reviewed by:	Mike Clonts		Date:	3/15/2012
FRP Status:			Date:	
Approved by:			Date:	

NOTE: The following checklist items correspond to the final regulations as outlined in 40 CFR 112.20, Appendix F. For all checklist items, indicate FRP adequacy as follows:

Facility Response Plan
Plan Review Checklist
For Verifying Compliance with Facility Response Plan Requirements

Activity Information		
Activity Type		FRP Plan Review
Reason for Review		Initial Plan Submittal (new FRP)
		5-year Review
		Plan Amendment (note type)
	√	Other (note other reason)
		Note: ***Pre-inspection review***
Activity Date		3/15/2012
EPA Inspector		***Mike Clonts***

112.20(h)(11)	A. Response Plan Cover Sheet (sec. 2.0)	YES	NO		N/A
	General Information (sec 2.1)				
	Facility name	√			
	Facility address	√			
	Facility telephone number	√			
	Mailing address (if different from facility address)	√			
	Facility owner/operator and address **(recommended)**	√			
	Facility owner telephone **(recommended)**	√			
	Dun & Bradstreet number	√			
	Longitude (degrees, minutes, seconds)	√			
	Latitude (degree, minutes, seconds)	√			
	North American Industrial Classification System (NAICS) code	√			
	Facility start up date **(recommended)**	√			
	Facility acres **(recommended)**	√			
	Name of protected waterway or environmentally sensitive area	√			
	Distance to navigable water	√			
	Worst case discharge amount (gallons)	√			
	Maximum oil storage capacity (gallons)	√			
	Largest aboveground storage tank (AST) capacity (gallons)	√			

	Total number of ASTs	√			
	Total number of underground storage tanks (USTs)				√
	Total UST storage				√
	Total storage of drums and transformers that contain oil				√
	Number of surface impoundments and total storage of surface impoundments				√
	Applicability of Substantial Harm Criteria (sec.2.2)				
	Attachment C-1 with answer to each applicability question	√			
	Documentation of reliability and analytical soundness of alternate formula				√
Please use the following space to note any missing or incomplete information.					
	Certification (sec. 2.3)				
	Plan holder certification is included (contains signature, title, and date)	√			
Please use the following space to note any missing or incomplete information.					
	Verification of Contract (sec. 2.4)				
	Plan holder certification is included (contains signature, title, and date)	√			
Please use the following space to note any missing or incomplete information. *Review of the FRP was conducted in conjunction with the Enterprise, Emergency*					

FRP 06-TX-00525
Enterprise Products Operating LLC, East Storage/Splitter III

112.20(h)(1)	**B. Emergency Response Action Plan (ERAP) (sec. 1.1)**	YES	NO	N/A	N/A
112.20(h)(1)	Separate Section of FRP	√			
112,20(h)(1)(i),	Qualified Individual (QI) Information (sec. 1.2)	√			
112,20(h)(1)(ii),	Emergency Notification List (sec. 1.3.1)	√			
	Spill Response Notification Form (sec. 1.3.1)	√			
112.20(h)(1)(iv)	Response Equipment List and Location (sec. 1.3.2)				√
112.20(h)(1)(iv)	Response Equipment Testing and Deployment (sec. 1.3.4)				√
112.20(h)(1)(v)	Facility Response Team List (sec. 1.3.4)		√		
112.20(h)(1)(vi)	Evacuation Plan (sec. 1.3.5)	√			
112.20(h)(1)(vii)	Immediate Actions (sec. 1.7.1)	√			
112.20(h)(1)(viii)	Facility Diagrams (sec. 1.9)	√			
	*The sections above should be extracted from the more detailed corresponding sections of the plan.				
Please use the following space to note any missing or incomplete information in the ERAP. *See corresponding sections of this checklist for information on*					

112.20(h)(2)	**C. Facility Information (sec. 1.2)**	YES	NO	N/A	N/A
	Facility name (sec. 1.2.1)	√			
	Street address	√			
	City, state, zip code	√			
	County	√			
	Phone number	√			

	Latitude/longitude (sec. 1.2.2)	√			
	Wellhead protection area (sec. 1.2.3)		√		
	Owner/operator (both names included, if different) (sec. 1.2.4)	√			
	QI Information (sec. 1.2.5)	√			
	-Name, position, street address, phone numbers	√			
	- Description of specific response training experience	√			
	Oil storage start-up date (sec. 1.2.6)	√			
	Facility operations description (sec. 1.2.7)	√			
	North American Industrial Classification System (NAICS) or Standard Industrial Classification code (SIC)	√			
	Dates and types of substantial expansion (sec. 1.2.8)				
Please use the following space to note any missing or incomplete information in Section 1.2 of the Plan and, to the extent possible, assess the accuracy of the					

FRP 06-TX-00525
Enterprise Products Operating LLC, East Storage/Splitter III

112.20(h)(1) and (3)	**D. Emergency Response Information (sec. 1.3)**	YES	NO	N/A	N/A
	Notification (sec. 1.3.1)				
	Emergency Notification Phone List		√		
	National Response Center phone number	√			
112.20(h)(1)(i)	QI (day and evening) phone numbers	√			
	Company response team (day and evening) phone numbers	√			
	Federal On-Scene Coordinator (OSC) and/or Regional Response Center (day and evening) phone numbers		√		
	Local response team phone numbers (fire department/cooperatives)	√			
	Fire marshal (day and evening) phone numbers	√			
	State emergency response phone number(s)	√			
	State Police phone number	√			
	State Emergency Response Commission (SERC) phone number	√			
	Local emergency planning committee (LEPC) phone number	√			
	Wastewater treatment facility(s) name and phone number (**recommended**)				√
	Local water supply system (day and evening) phone numbers	√			
	Weather report phone number	√			
	Local television/radio phone number(s) for evacuation notification	√			
112.20(h)(3)(i)	Spill response contractor(s)	√			
	Factories/Utilities with water intakes (**recommended**)	√			
	Trustees of sensitive areas (**recommended**)				√
	Hospital phone number	√			
	Spill Response Notification Form				
	Reporter's name, position and phone number	√			
	Company information	√			

	Incident description (source/cause)	√			
	Material (were materials discharged?)	√			
	Response action (meeting federal obligations to report, calling for responsible party, time called)	√			
	Impact	√			
	Date/time of incident, incident address/location, nearest city/state/county/zip code, distance from city/units of measure/direction from city, township, range, borough, container type/tank oil storage capacity	√			
	Units of measure, facility oil storage capacity/units of measure, facility longitude and latitude	√			
Please use the following space to note any missing or incomplete information in Section 1.3 of the Plan. Please use to assess the accuracy of the information					
112.20(h)(1)(iv), 112.20(h)	**Response Equipment (sec 1.3.2)**				
	Equipment Information				
	Equipment list	√			
	Equipment location	√			
	Release handling capabilities and limitations (e.g., launching sites)	√			
Please use the following space to note any missing or incomplete information. *Page 5-1 of the Plan indicates the facility does not maintain spill response*					

112.20(h)(3)(vi)	**E. Response Equipment List (Identify if Facility, OSRO, CO-OP owned by letters O, F, or C) (sec. 1.3.2)**	YES	NO	N/A	N/A
	Skimmers/pumps (operational status, type/model/year, number or quantity, capacity, daily effective recovery rate, storage location)	O, F			
	Boom (containment boom: operational status, year, number, skirt size)	O, F			
	Boom (sorbent boom: operational status, type/model/year, number, size (length))	O, F			
	Chemical countermeasure agents stored	O			
	Sorbents (type, year purchased, amount, storage location)	O, F			
	Hand tools (type, quantity, storage location)	O, F			
	Communications equipment (operational status, type and year, quantity, storage location)	O, F			
	Fire Fighting and Personnel Protective Equipment	O, F			
	Boats and Motors (operational status, type, and year, quantity, storage location)	O, F			
	Other (e.g., heavy equipment, cranes, dozers, etc.) (operational status, type and year, quantity, storage location)	O, F			
	Equipment Location	O, F			
	Amount of oil that emergency response equipment can handle and limitations (e.g., launching sites) must be described.	O			
Please use the following space to note any missing or incomplete information.					

112.20(h)(8)(i) and (ii)	**F. Response Equipment Testing and Deployment Drill Log (sec. 1.3.3)**	YES	NO	N/A	N/A
	Date of last inspection or equipment test	√			
	Inspection Frequency	√			
	Date of Last Deployment	√			
	Deployment Frequency	√			

	OSRO Certification (Note: Facilities without facility owned response equipment must ensure that the Oil Spill Removal Organization that is identified in the response plan to provide this response equipment certifies that the deployment exercises have been met)	√			
Please use the following space to note any missing or incomplete information in Section 1.3.3 of the Plan and verify that the log information is up-to-date during the					

	G. Personnel (sec. 1.3.4)	YES	NO	N/A	N/A
112.20(h)(3)(v), 112.20(h)	**Emergency Response Personnel Information** (Personnel whose duties involve responding to emergencies, including oil discharges, even				
	Response personnel name(s)		√		
	Facility response team title/position		√		
	Response personnel phone numbers (work/home, other)		√		
	Response personnel response time		√		
	Response personnel responsibility		√		
	Response personnel training (type and date)		√		
112.20(h)(3)(i)	**Emergency Response Contractor Information**		√		
	Response contractor name (s)	√			
	Response contractor phone numbers	√			
	Response contractor response time		√		
112.20(h)(3)(ii)	Response contractor evidence of contractual arrangements		√		
	Facility Response Team Information (Composed of Emergency Response Personnel and Emergency Response that will respond				
	Response team member name(s)		√		
	Response team member job function		√		
	Response team member response time		√		
	Response team member phone/pager number		√		
	Name of emergency response contractor (contractors providing facility response team services may be different than contractors providing oil spill response services)	√			
	- Response time	√			
	- Phone/pager		√		
Please use the following space to note any missing or incomplete information in Section 1.3.4 of the Plan. ***Appendix B of the FRP references the "Red Book" for***					

112.20(h)(1)(vi),	H. Evacuation Plans (sec. 1.3.5)	YES	NO	N/A	N/A
	Facility Evacuation Plan (sec. 1.3.5.1)				
	Location of stored materials	√			
	Hazard imposed by spilled materials	√			
	Spill flow direction	√			
	Prevailing wind directions and speed	√			
	Water currents, tides, or wave conditions (if applicable)	√			
	Arrival route of emergency response personnel and response equipment	√			
	Evacuation routes	√			

	Alternative routes of evacuation	√			
	Transportation of injured personnel to nearest emergency medical facility	√			
	Location of alarm/notification systems	√			
	Centralized check-in area for roll call	√			
	Mitigation command center location	√			
	Location of shelter at facility	√			
112.20(h)(3)(vii),	Community Evacuation Plans referenced (sec. 1.3.5.3)	√			
Please use the following space to note any missing or incomplete information in Section 1.3.5 of the plan and to assess the accuracy of the information provided					

112.20(h)(3)(ix)	**I. Qualified Individual's Duties (sec. 1.3.6)**	YES	NO	N/A	N/A
112.20(h)(3)(ix)(A)	Activate internal alarms and hazard communication systems	√			
112.20(h)(3)(ix)(B)	Notify Response Personnel	√			
112.20(h)(3)(ix)(C)	Identify character, exact source, amount, and extent of the release	√			
112.20(h)(3)(ix)(D)	Notify and provide information to appropriate Federal, State and local authorities	√			
112.20(h)(3)(ix)(E)	Assess interaction of spilled substance with water and/or other substances stored at facility and notify on-scene response personnel of assessment	√			
112.20(h)(3)(ix)(F)	Assess possible hazards to human health and the environment	√			
112.20(h)(3)(ix)(G)	Assess and implement prompt removal actions		√		
112.20(h)(3)(ix)(H)	Coordinate rescue and response actions		√		
112.20(h)(3)(ix)(I)	Access company funding to initiate cleanup activities		√		
112.20(h)(3)(ix)(J)	Direct cleanup activities		√		
Please use the following space to note any missing or incomplete information. *The items checked "NO" above, are not addressed or inadequately addressed in*					

112.20(h)(4)	**J. Hazard Evaluation (sec. 1.4)** *(See Section II, Appendix A)*	YES	NO	N/A	N/A
	Hazard Identification (sec. 1.4.1)				
	Tank Above Ground and Below Ground				
	Tanks (List Tanks by Number, Product and Shell Capacity in the space below)				
	Tank number(s)	√			
	Substance(s) stored	√			
	Quantity(s) stored	√			
	Tank type(s)/year(s) of construction	√			
	Shell capacity(s)	√			
	Failure(s)/cause(s)	√			
	Surface Impoundments (SI)				
	SI Number(s)				√
	Substance(s) Stored				√
	Quantity(s) Stored				√
	Surface area(s)/year(s) of construction				√

FRP 06-TX-00525
Enterprise Products Operating LLC, East Storage/Splitter III

	Maximum capacity(s)				√
	Failure(s)/cause(s)				√
	Labeled schematic drawing	√			
	Description of transfers (loading and unloading) and volume of material	√			
	Description of daily operations	√			
	Secondary containment volume(s)	√			
	Normal daily throughput of the facility	√			
Please use the following space to note any missing or incomplete information in Section 1.4.1 of the plan and to assess the accuracy of the information in Section					

112.20(h)(4)	**K. Vulnerability Analysis (sec. 1.4.2)** (See Appendix A - Calculation of the Planning Distance)	YES	NO	N/A	N/A
	Analysis of potential effects of an oil spill on vulnerable areas. (Attachment C-III to Appendix C to this part provides a method that owners or				
	Water intakes (drinking, cooling or other)	√			
	Schools	√			
	Medical facilities	√			
	Residential areas	√			
	Businesses	√			
	Wetlands or other sensitive environments	√			
	Fish and wildlife	√			
	Lakes and streams	√			
	Endangered flora and fauna	√			
	Recreational areas	√			
	Transportation routes (air, land, and water)	√			
	Utilities	√			
	Other applicable areas of economic importance (list below)	√			
Please use the following space to note any missing or incomplete information in Section 1.4.2 of the plan and to assess the accuracy of the information based on field					

112.20(h)(4)	**L. Analysis of the Potential for an Oil Spill (sec. 1.4.3)**	YES	NO	N/A	N/A
	Description of likelihood of release occurring	√			
	Oil spill history for the life of the facility	√			
	Horizontal range of potential spill	√			
	Vulnerability to natural disaster	√			
	Tank age	√			
	Other factors (e.g., unstable soils, earthquake zones, Karst topography, etc.)	√			
Please use the following space to note any missing or incomplete information in Section 1.4.3 of the Plan and to assess the accuracy of the information based on field					

112.20(h)(4)	**M. Facility Reportable Oil Spill History Description (sec. 1.4.4)**	YES	NO	N/A	N/A

	Date of discharge(s)	√			
	List of discharge causes	√			
	Material(s) discharged	√			
	Amount of discharges (gallons)	√			
	Amount that reached navigable waters (if applicable)	√			
	Effectiveness and capacity of secondary containment	√			
	Clean-up actions taken	√			
	Steps taken to reduce possibility of reccurrence	√			
	Total oil storage capacity of tank(s) or impoundment(s) from which material discharged	√			
	Enforcement actions	√			
	Effectiveness of monitoring equipment	√			
	Description(s) of how each oil discharge was detected	√			
Please use the following space to note any missing or incomplete information in Sectio 1.4.4 of the Plan.					

	N. Discharge Scenarios (sec. 1.5)	YES	NO	N/A	N/A
	Small Discharges (sec. 1.5.1) (Description of small discharges addressing facility operations and components including but not limited to				
	Loading and unloading operations				√
	Facility maintenance operation				√
	Facility piping	√			
	Pumping stations and sumps	√			
	Oil storage location				√
	Vehicle refueling operations				√
	Age and condition of facility components	√			
	Small volume discharge calculation for a facility	√			
	Facility-specific spill potential analysis		√		
	Average most probable discharge for complexes				√
	1,000 feet of boom (1 hour deployment time)	√			
	Correct amount of boom for complexes				√
	Oil recovery devices equal to small discharge (2 hour recovery time)	√			
	Oil storage capacity for recovered material	√			
	Scenarios Affected by the Response Efforts (sec. 1.5.1.2)				
	Size of the discharge	√			
	Proximity to downgradient wells, waterways, and drinking water intakes		√		
	Proximity to fish and wildlife and sensitive environments		√		
	Likelihood that the discharge will travel offsite (i.e., topography, drainage)	√			
	Location of the material discharged (i.e., on a concrete pad or directly on the soil)		√		
	Material discharged		√		

	Weather or aquatic conditions (i.e., river flow)		√		
	Available remediation equipment	√			
	Probability of a chain reaction of failures		√		
	Direction of discharge pathway	√			
	Medium Discharges (sec. 1.5.1) (Description of medium discharges scenarios addressing facility operations and components including but				
	Loading and unloading operations				√
	Facility maintenance operation				√
	Facility piping	√			
	Pumping stations and sumps	√			
	Oil storage location				√
	Vehicle refueling operations				√
	Age and condition of facility components	√			
	Medium volume discharge calculation for a facility	√			
	Facility-specific spill potential analysis		√		
	Maximum most probably discharge for complexes				√
	Oil recovery devices equal to medium discharge	√			
	Availability of sufficient quantity of boom	√			
	Oil storage capacity for recovered material	√			
	Scenarios Affected by the Response Efforts (sec. 1.5.1.2)				
	Size of the discharge	√			
	Proximity to downgradient wells, waterways, and drinking water intakes		√		
	Proximity to fish and wildlife and sensitive environments		√		
	Likelihood that the discharge will travel offsite (i.e., topography, drainage)		√		
	Location of the material discharged (i.e., on a concrete pad or directly on the soil)		√		
	Material discharged		√		
	Weather or aquatic conditions (i.e., river flow)		√		
	Available remediation equipment	√			
	Probability of a chain reaction of failures		√		
	Direction of discharge pathway		√		
Please use the following space to note any missing or incomplete information in Section 1.5.1 of the Plan and to assess the accuracy of the information provided					

112.20(h)(5)(i)	**O. Worst Case Discharge (sec. 1.5.2)** (See Appendix A) (When planning for the worst case discharge response all of the factors listed in the small and medium discharge section of the response plan shall be addressed)	YES	NO	N/A	N/A
	Facility Specific Worst Case Discharge Scenario		√		
	Description of worst case discharges scenarios addressing facility operations and components including but not limited to (sec.				
	Loading and unloading operations				√

	Facility Maintenance Operation				√
	Facility Piping				√
	Pumping stations and sumps	√			
	Oil storage location				√
	Vehicle refueling operations				√
	Age and condition of facility components	√			
112 Appendix D	Correct Worst Case Discharge (WCD) calculation for specific type of facility	√			
	Correct WCD calculation for complexes				√
112 Appendix E	Sufficient response resources for WCD	√			
	Sources and quantity of equipment for response to WCD	√			
	Oil storage capacity for recovered material	√			
	Scenarios Affected by the Response Efforts (sec. 1.5.1.2)				
	Size of the discharge	√			
	Proximity to downgradient wells, waterways, and drinking water intakes		√		
	Proximity to fish and wildlife and sensitive environments	√			
	Likelihood that the discharge will travel offsite (i.e., topography, drainage)	√			
	Location of the material discharged (i.e., on a concrete pad or directly on the soil)	√			
	Material discharged		√		
	Weather or aquatic conditions (i.e., river flow)	√			
	Available remediation equipment	√			
	Probability of a chain reaction of failures		√		
	Direction of discharge pathway	√			
Please use the following space to note any missing or incomplete information in Section 1.5.2 of the Plan and to assess the accuracy of the information provided					

112.20(h)(6)	**P. Discharge Detection Systems (sec. 1.6)**	YES	NO	N/A	N/A
	Discharge Detection by Personnel (sec. 1.6.1)				
	Description of procedures and personnel for spill detection	√			
	Description of facility inspections	√			
	Description of initial response actions	√			
	Emergency Response Information (referenced)	√			
Please use the following space to note any missing or incomplete information in Section 1.6.1 of the plan.					
Section II,	**Automated Discharge Detection (sec. 1.6.2)**	√			
	Description of automatic spill detection equipment, including overfill alarms and secondary containment sensors	√			
	Description of alarm verification procedures and subsequent actions	√			
	Initial response actions	√			
Please use the following space to note any missing or incomplete information in Section 1.6.2 of the Plan					

112.20(h)(7), Appendix E	Q. Plan Implementation (sec. 1.7)	YES	NO	N/A	N/A
	Identification of response resources for small, medium, and worst case spills (sec. 1.7.1)				
	Description of response actions	√			
	Accessibility of proper response personnel and equipment	√			
	Emergency plans for spill response	√			
	Additional response training	√			
	Additional contracted help	√			
	Access to additional response equipment/experts	√			
	Ability to implement plan, including response training and practice drills	√			
	Temporary storage	√			
	Recommended form detailing immediate action for small, medium and Worst Case spills (sec. 1.7.1.2A) (stop the product flow, warn personnel, shut off ignition sources, initiate containment, notify NRC, notify OSC, notify (as appropriate))	√			
Please use the following space to note any missing or incomplete information in Section 1.7.1 of the Plan.					
	Disposal Plan (sec. 1.7.2)				
	Description of procedures for recovering, reusing, decontaminating or disposing of materials	√			
	Materials addressed in Disposal Plan (recovered product, contaminated soil, contaminated equipment and materials (including drums tank parts, valves and shovels), personnel protective equipment, decontamination solutions, absorbents, spent chemicals))	√			
	Plan prepared in accordance with any federal, state, and/or local regulations	√			
	Plan addresses permits required to transport or dispose of recovered materials	√			
Please use the following space to note any missing or incomplete information in Section 1.7.2 of the Plan.					
Section II, 112.7(e)(1),	**Containment and Drainage Planning (sec. 1.7.3)**				
	Description of containing/controlling a spill through drainage	√			
	Containment and drainage plan available				√
	Available volume of containment	√			
	Drainage route from oil storage and transfer areas				√
	Construction materials used in drainage troughs				√
	Type and number of valves and separators in drainage system				√
	Sump pump capacities				√
	Containment capacities of weirs and booms and their location				√
	Other cleanup materials				√
Please use the following space to note any missing and incomplete information in Section 1.7.3 of the Plan and to assess the accuracy of the information provided					

	R. Self-Inspection, Training, and Meeting Logs (sec. 1.8)	YES	NO	N/A	N/A
	Facility Self-Inspection (sec. 1.8.1)				
Section II, 112.7(e)(8)	Records of tank inspections with dates (tank leaks, tank foundations, tank Piping) contained or cross-referenced in Plan or maintained electronically for five years	√			

Section II, 112.7(e)(8)	Records of secondary containment inspections with dates (dike or berm system, secondary containment, retention and drainage ponds) contained or cross-referenced in Plan or maintained electronically for five years	√			
	Enterprise Products Operating LLC, East Storage/Splitter III				
112.20(h)(8)(i)	Response equipment inspection				
	Response equipment checklist (sec. 1.8.1.2)	√			
	Equipment inventory (item and quantity)	√			
	Storage location (time to access and respond)	√			
	Accessibility (time to access and respond)	√			
	Operational status/condition	√			
	Actual use/testing (last test date and frequency of testing)	√			
	Shelf life (present age, expected replacement date)	√			
	- Inspection date	√			
	- Inspector's signature	√			
	- Inspection records maintained for 5 years	√			
	- Response equipment inspection log (inspector, date, comments)	√			
Please use the following space to note any missing or incomplete information in Section 1.8 of the Plan and to assess the accuracy of the information. *Page 5-1 of*					
	Facility Drills/Exercises (sec. 1.8.2)				
	Description of drill/exercise program based on National Preparedness for Response Exercise Program (PREP) guidelines or other comparable program	√			
	- If "no" alternative program has been approved by EPA RA (describe program below)				√
	QI notification drill				√
	Spill management team tabletop exercise				√
	Equipment deployment exercise				√
	Unannounced exercise				√
	Area exercise				√
	Description of evaluation procedures for drill program				√
	Qualified Individual notification drill log (sec. 1.8.2.1)				
	Date, company, qualified individual, other contacted, emergency scenario, evaluation	√			
	Spill management team tabletop drill log (sec. 1.8.2.2)				
	Date, company, QI, participants, emergency scenario, evaluation, changes to be implemented, time table for implementation	√			
Please use the following space to note any missing or incomplete information in Section 1.8.2 of the Plan and to assess the accuracy of the information provided					
	Response Training (sec. 1.8.3)				
	Description of response training program (including topics)	√			
	Personnel response training logs (name, response training date/and number of hours, prevention training date/and number of hours)	√			
	Discharge prevention meeting logs (date, attendees)	√			
Please use the following space to note any missing or incomplete information in Section 1.8.3 of the Plan and verify that the log information is up-to-date during the					

	S. Diagrams (sec. 1.9)	YES	NO	N/A	N/A
	Site Plan Diagram *Enterprise Products Operating LLC, East Storage/Splitter III*				
	Entire facility to scale	√			
	Above and below-ground storage tanks	√			
	Contents and capacities of bulk oil storage tanks	√			
	Contents and capacities of drum storage areas				√
	Contents and capacities of surface impoundments				√
	Process buildings	√			
	Transfer areas	√			
	Location and capacity of secondary containment systems				√
	Location of hazardous materials	√			
	Location of communications and emergency response equipment				√
	Location of electrical equipment that might contain oil	√			
	If the facility is a complex facility, the interface between EPA and other regulating agencies				√
Please use the following space to note any missing or incomplete information in the Site Plan diagram and to assess the accuracy of the diagram based on field					
	Site Drainage Plan Diagram				
	Major sanitary and storm sewers, manholes, and drains	√			
	Weirs and shut-off valves				√
	Surface water receiving streams				√
	Fire fighting water sources	√			
	Other utilities				√
	Response personnel ingress and egress	√			
	Response equipment transportation routes	√			
	Direction of spill flow from discharge points	√			
Please use the following space to note any missing or incomplete information in the Site Drainage Plan diagram and to assess the accuracy of the diagram based on					
	Site Evacuation Plan Diagram				
	Site plan diagram with evacuation routes	√			
	Location of evacuation regrouping areas	√			
Please use the following space to note any missing or incomplete information in the Site Evacuation Drainage Plan diagram and to assess the accuracy of the					

Section II, 112.7(e)(9)	T. Site Security (sec. 1.10)	YES	NO	N/A	N/A
	• Description of facility security	√			
	(Emergency cut-off locations, enclosures, guards and their duties, lighting, valve and pump locks, pipeline connection caps)	√			
Please use the following space to note any missing or incomplete information in Section 1.10 of the plan and to assess the accuracy of the information provided based					

Please use the following space to describe overall impressions of the facility response plan (i.e., functional, workable). A set of questions is provided in Appendix C to	

Reviewed by:	*Mike Clonts*
Date:	*3/15/2012*

FRP-06-TX-00525

Enterprise Products Operating LLC, East Storage/Splitter III

Facility Response Plan Field Inspection Checklist

Activity Information	
Activity Type	*FRP Field Inspection*
Activity Date	**3/15/2012**
EPA Inspector	*Don Smith*

Facility Information								
Facility ID:	FRP Harm Category?	√	Substantial Harm					
		√	Significant & Substantial Harm					
FRP ID:	Complex?		Yes	√	No			
	If Complex, Shared Jurisdiction?		Yes		No	√	N/A	
Facility Name:	*East Storage/Splitter III*							
Address:	*316 S. Main*							
City:	*Mont Belvieu*							
State:	*TX*						Zip: *77580*	
Owner/Operator:	*Enterprise Products Operating LLC*							
FRP Contact:	*Jon Fields*							
Telephone:	*281-385-4300*							
Email:	jefields@eprod.com							
QI:	*Brenda Ganter*							
Telephone:	*281-385-0510*							
Email:	bganter@eprod.com							
Notes/Comments: (Include County name)								

112.20(h), 112 Appendix F Section 1.0	A. General	YES	NO	N/A
112 Appendix F Section 1.0	Copy of FRP is available at the facility	√		

112.20(h)(1), 112 Appendix F Section 1.1	Copy of Emergency Response Action Plan is available at the facility.	√		
112.20(h)(1)(vi), 112.20(h)(3)(vii), 112 Appendix F Section 1.3.5	Evacuation plan is readily available.	√		
Describe how the facility incorporates the FRP into its overall training program:				
Notes				

112.20(h), 112 Appendix F Section 1.3.1	**B. Spill Notification**	**YES**	**NO**	**N/A**
112,20(h)(1)(ii), 112.20(h)(3)(iii), 112 Appendix F Section 1.3.1	Spill notification call-down list contains correct telephone numbers.	√		
112,20(h)(1)(ii), 112.20(h)(3)(iii), 112 Appendix F Section 1.3.1	Emergency contact information has been verified as current.	√		
Notes				

112.20(h)(4), 112 Appendix F Section 1.4	**C. Hazard Evaluation**	**YES**	**NO**	**N/A**
112 Appendix F	Facility total storage capacity corresponds to storage capacity reported in the	√		

Section 1.4.1	plan			
112 Appendix F Section 1.4.1	Secondary containment is adequate for all aboveground tanks	✓		
112 Appendix F Sections 1.4.2 and 1.4.3	Following factors affecting response efforts are properly addressed / characterized:			
	- Discharge volume		✓	
	- Proximity to downgradient water		✓	
	- Proximity to fish and wildlife and sensitive environments		✓	
	- Proximity to drinking water intakes		✓	
	- Likelihood that discharge will travel offsite		✓	
	- Location of material spilled (i.e., on concrete pad or soil)		✓	
	- Type of material discharged		✓	
	- Weather or aquatic conditions anticipated during adverse conditions		✓	
	- Available remediation equipment		✓	
	- Probability of chain reaction or failures		✓	
	- Direction of spill		✓	
112 Appendix F Section 1.4.4	History of all reportable discharges at the facility is maintained with the FRP	✓		

Notes: ***The Plan should describe the planning scenario, considering the reasonably expected circumstances of a discharge that would affect the response efforts required. This would include any circumstances the may have not been addressed in the Plan (see comment under Discharge Scenarios below).***

112 Appendix F Section 1.5	D. Discharge Scenarios	YES	NO	N/A
112.20(h)(5)(i), 112 Appendix F Section 1.5.2	Worst-case discharge scenario described in Plan is accurate (e.g., source and impacts)		✓	
112 Appendix F Section 1.5.1	Medium discharge scenario described in Plan is accurate (e.g., source and impacts)	✓		
112 Appendix F Section 1.5.1	Small discharge scenario described in Plan is accurate (e.g., source and impacts)	✓		

Notes

Please clarify the WCD volume in the event the automatic well shut-off fails, including how the wells will be controlled (manual?) and the volumetric difference from the calculation presented in the Plan.

112.20(h)(1) and (h)(3)(ix), 112 Appendix F Sections 1.3.6 and 1.6	E. Response Personnel	YES	NO	N/A
112.20(h)(1)(i), 112 Appendix F Section 1.2	Qualified Individual (QI) information (name, title, telephone numbers) is current	√		
112.20(h)(3)(ix), 112 Appendix F Section 1.3.6	QI is aware of, and prepared to fulfill, responsibilities:	√		
112.20(h)(3)(ix)(A), 112 Appendix F Section 1.3.6	- Activate internal alarms and hazard communication systems	√		
112.20(h)(3)(ix)(B), 112 Appendix F Section 1.3.6	- Notify response personnel	√		
112.20(h)(3)(ix)(C), 112 Appendix F Section 1.3.6	- Identify character, exact source, amount, and extent of the release	√		
112.20(h)(3)(ix)(D), 112 Appendix F Section 1.3.6	- Notify and provide information to appropriate Federal, State, and local authorities	√		
112.20(h)(3)(ix)(E), 112 Appendix F Section 1.3.6	- Assess interaction of substances with water and/or other substances stored at facility and notify on-scene response personnel of assessment	√		
112.20(h)(3)(ix)(F), 112 Appendix F Section 1.3.6	- Assess possible hazards to human health and the environment	√		
112.20(h)(3)(ix)(G), 112 Appendix F Section 1.3.6	- Assess and implement prompt removal actions	√		
112.20(h)(3)(ix)(H), 112 Appendix F Section 1.3.6	- Coordinate rescue and response actions	√		
112.20(h)(3)(ix)(I), 112 Appendix F Section 1.3.6	- Access company funding to initiate cleanup activities	√		

112.20(h)(3)(ix)(J), 112 Appendix F Section 1.3.6	- Direct cleanup activities	√		
112 Appendix F Section 1.2	QI has specific response training experience	√		
112 Appendix F Section 1.6	Facility personnel are familiar with procedures for detecting a discharge	√		
Notes				

112.20, 112 Appendices E and F	**F. Response Equipment**	**YES**	**NO**	**N/A**
112 Appendix E Section 3.0	Required response resources for a small discharge are provided.	√		
112 Appendix E Section 3.3.1	- 1,000 ft of boom and, if marine transfer facility, boom equal to twice the length of largest vessel	√		
112 Appendix E Section 3.3.1	- Capacity of deploying boom within 1 hour of small discharge	√		
112 Appendix E Section 3.3.2	- Response equipment capable of being deployed within 2 hours of a small discharge	√		
112 Appendix E Section 3.3.2	- Response equipment daily recovery capacity equal to the total volume of small discharge	√		
112 Appendix E Section 12.2	- Temporary storage capacity equal to twice the volume of the small discharge	√		
112 Appendix E Section 4.0	Required response resources for a medium discharge are provided:	√		
112 Appendix E Section 4.5	- Sufficient quantities of boom for containment and collection and for protection	√		
112 Appendix E Section 4.4	- Response equipment daily recovery capacity equal to 50% of total volume of small discharge	√		
112.20(h)(3)(ii), 112 Appendix F Section 1.3.4	Facility has current signed contract with response contractor and/or membership in cleanup co-op.	√		

	- If YES, facility has evidence of contractor's equipment deployment exercises (annually)			
112.20, 112 Appendix F	Facility has its own response equipment.	√		
112.20(h)(8)(i) and (ii), 112 Appendix F Section 1.3.3, 112 Appendix F Section 1.8.1.2	- If YES, facility response equipment is regularly inspected (check logs)	√		
112 Appendix F Section 1.3.2	Following equipment is provided and, if so, is operational, accessible, and has adequate capacity:	√		
112 Appendix F Section 1.3.2(1)	- Skimmers		√	
112 Appendix F Section 1.3.2(1)	- Pumps	√		
112 Appendix F Section 1.3.2(2)	- Containment booms	√		
112 Appendix F Section 1.3.2(5)	- Sorbents	√		
112 Appendix F Section 1.3.2(3)	- Chemical countermeasures			√
112 Appendix F Section 1.3.2(7)	- Communication equipment	√		
112 Appendix F Section 1.3.2(8)	- Firefighting equipment	√		
112 Appendix F Section 1.3.2(8)	- Personal protective equipment	√		
112 Appendix F Section 1.3.2(9)	- Other equipment, boots, motors, etc.	√		
112 Appendix F Section 1.7.2	Procedures have been established for recovering, reusing, decontaminating or disposing of materials	√		

Notes

The Plan indicates the facility does not maintain spill response equipment, and OSRO's will respond to a Worst Case Discharge. Enterprise maintains two response trailers containing equipment that may be utilized in the event of a discharge.

112 Appendix F	**G. Self Inspection**	**YES**	**NO**	**N/A**

Section 1.8.1	G. Self Inspection	YES	NO	N/A
112 Appendix F Section 1.8.1	Records of tank inspections are maintained (check last 5 years of records)	√		
	The following industry standard(s) are used to inspect aboveground bulk storage containers:	√		
	- Steel Tank Institute (STI) SP-1			√
	- American Petroleum Institute (API) Standard 653			√
	- Hybrid program developed by Professional Engineer			√
	- Other (specify in notes/comments section below)			√
112 Appendix F Section 1.8.1	Records of secondary containment inspections are maintained (check last 5 years of records)	√		
112.20(h)(6), 112 Appendix F Section 1.6	Automatic discharge detection/prevention systems are inspected/tested regularly (overfill alarms, secondary containment sensors)	√		
112 Appendix F Section 1.8.3	Discharge prevention meetings are held periodically (check last 5 years of records)	√		
Notes				

112.20(h)(8)(ii), 112.21, Appendix F Section 1.8.2	H. Drills/Exercises	YES	NO	N/A
112.21(c), 112 Appendix F Section 1.8.2	Facility drills/exercises program is based on National Preparedness for Response Exercise Program (PREP) Guidelines	√		
	- If NO, alternative program has been approved by the EPA RA.			√
	QI notification drills are performed (quarterly)			√
	Spill Management Team Tabletop Exercises are performed (annually)			√

	Facility Equipment Deployment Exercises are performed (semi-annually)			√
	Unannounced Exercises are performed (annually)			√
	Area Exercises are performed			√
Notes				

112.20(h)(9), 112 Appendix F Section 1.9	**I. Diagrams**	**YES**	**NO**	**N/A**
112 Appendix F Section 1.9(1)	Site plan diagram appears to accurately represent the facility	√		
112 Appendix F Section 1.9(2)	Drainage plan appears to accurately represent the facility	√		
Notes				

Field Notes	
Area	**Notes/Remarks**

Photo Documentation Log	
Photo Number	**Description (include date, location and direction)**
	See separate Photo Documentation Log

Government Initiated Unannounced Exercise (GIUE) Preparation and Implementation Checklist

Activity Information	
Activity Type	GIUE Preparation
Activity Date	
EPA Evaluator	

Facility Information

Facility ID:				FRP Harm Category?		Substantial Harm	
						Significant & Substantial Harm	
FRP ID:				Complex?		YES	NO
Facility Name:							
Address:							
City:		State:		ZIP:			
Owner/Operator:							
FRP Contact:				Telephone:			

Notes/Comments: (Include County name)

GIUE Facility Selection

Response Jurisdiction:		U.S. Coast Guard		U.S. EPA
Regionally Specific Concerns:		High volume port		
		Areas of economically sensitive concerns		
		Proximity to agricultural intakes		
		Proximity to residential intakes		
		Proximity to power plant intakes		
		Homeland security issues		
		Sector/Environmental Justice issues		
FRP Approved?		YES		NO
OSRO Contractor?	YES	NO	Facility is:	
			Fully OSRO Dependent	
			Partially OSRO Dependent	
			Self Sufficient	

Names of nearby Navigable Waters:				
Tidal considerations or stream velocity considerations:				
Sensitive Environments (Check NCP, ACP, ESI maps):				
Pre-designated Boom Deployment:		YES		NO
ERAP is thorough and complete?		YES		NO
Other Concerns (e.g. waterbody considerations that may influence boom deployment methods and priorities):				

Scenarios Identified in FRP

Scenarios Identified in FRP	Small:
	Medium:
	Worst Case Discharge:
Actual Worst Case Discharge (barrels) calculated from Worst Case Dishcarge Worksheet :	366.00
Actual Worst Case Discharge (gallons) calculated from Worst Case Discharge Worksheet:	15372

Are scenarios realistic?		Yes		No
Are planned scenarios detailed enough to exercise?		Yes		No
Are Planning Distance Calculations complete?		Yes		No

If yes:	Planning Distance:	
	Actual Planning Distance (miles) calculated from Planning Distance Worksheet:	
	Affected Resources/Areas:	

GIUE Design and Preparation

Relevant facility information in the ERAP:

Specific locations for pre-deployment	Areas listed:	
	Equipment listed:	
OSRO/Facility Representatives	QI identified in the plan:	
	OSRO listed in plan:	
Types of oil (e.g. gasoline, diesel, asphalt):		
Specific Environmentally Sensitive Locations:		
Locations of:	Activities:	
	Boom Deployment:	
	Skimming/Recovery Operations:	
Protection Strategy to be implemented (e.g. deflection, protection, containment, U-shape, J-shape, emulsification):		
Specific RCP/ACP/NCP Considerations (e.g. drinking water intakes, cooling water intakes):		
FRP Scenarios	Small:	
	Medium:	
	Worst Case Discharge:	
Plans to modify scenario?	YES	NO
Note: If existing plan does not have sufficient detail, may need to develop scenario		
If yes:	Enter deviations from plan exercise scenario:	
	Describe rationale for modifying scenario:	

Activity Information	
Activity Type	**GIUE Implementation**
Activity Date	
EPA Evaluator	

Facility Information			
Facility ID			
Facility Response Plan (FRP) ID			
Facility Name			
Address			
City			
State			Zip:
Evaluators			
Date:		Start Time:	End Time:

A. Notifications		**YES**	**NO**	**COMMENTS**
112.20(h)(1)(ii);112.20(h)(3)(iii); 112 Appendix F, 1.3; 112 Appendix F, 1.7.1	Was notification list used?			
112.20(h)(1)(ii); 112.20(h)(3)(iii); 112 Appendix F, 1.3;112 Appendix F, 1.7.1	Did notification list include contacts identified in the Facility Response Plan?			
112.20(h)(1)(ii); 112.20(h)(3)(iii); 112 Appendix F, 1.3; 112 Appendix F, 1.7.1	Was State spill notification number utilized?			
112 Appendix F, 1.3(2)	Was National Response Center (NRC) notified?			
112.20(h)(1)(ii); 112.20(h)(3)(iii); 112 Appendix F, 1.3; 112 Appendix F, 1.7.1	Who conducted notifications?			
112.20(h)(1)(ii); 112.20(h)(3)(iii); 112 Appendix F, 1.3; 112 Appendix F, 1.7.1	Was notification list accurate and up to date? Indicate changes needed.			
112 Appendix F, 1.1	Was the FRP available on the premises?			

FRP Planning Distance Calculation Worksheet

40 CFR 112, Appendix C

The facility must evaluate whether the facility is located at a distance such that a discharge from the facility could cause injury to the environment or a public drinking water intake.

A regulated facility may meet substantial harm criteria without having to perform a planning distance calculation. The planning distance calculation is not necessary for facilities that have inadequate secondary containment or that have experienced a reportable spill in an amount greater than or equal to 10,000 gallons (238 barrels) within the past 5 years.

If more than one type of navigable water condition applies to a facility, then the facility is required to perform a planning distance calculation for each navigable water type to determine the greatest single distance that oil may be

I. Moving Navigable Water Calculation

☐ Not Applicable?

A) Planning Distance (miles) = PD = v * t * c (miles)
Chezy-Manning Equation (ft/s) = $v = (1.5/n) * r^{2/3} * s^{1/2}$

where:

n = Manning's Roughness Coefficient (Table 1, 40 CFR 112, Appendix C)	=	0.035	
r = Hydraulic Radius in ft (average mid-channel depth * 0.667)	=	6.003	feet
s = Average Slope of Moving Waterway (USGS Topo Map)	=	9.00E-05	
	v =	1.343	feet/second
t = Time Interval (hours) (Table 3, 40 CFR 112, Appendix C)	=	27	hours
c = Constant Conversion Factor	=	0.68	sec*mile / hr*ft
	Planning Distance =	24.66	miles

I. Oil Transport on Still Water

☐ Not Applicable?

A) Surface Area Covered by an Oil Spill (ft^2) = A_1
$A_1 = 10^5 * V^{3/4} * C$

where:

V = Worst Case Discharge Volume (gallons)	=	15372	gallons
C = Constant Conversion Factor	=	0.1643	
	A_1 =	22682208.87	$feet^2$

B) Spreading Formula (ft^2) = A_2

$A_2 = (\pi * r^2)/2$

Solving for the radius, r, using $A_1 = A_2$, then $r = [(2 * A_1)/\pi]^{1/2}$

r	=	3799.99	feet
r	=	0.72	miles

C) Total Planning Distance = Spreading Distance + 18.6 miles

	=	19.32	miles

Worst Case Discharge Worksheet

40 CFR 112, Appendix D

I. Single Tank Facilities

Not Applicable? ☐

The Tank's Capacity = _____ gallons

A) Secondary Containment is Adequate

The Worst Case Discharge is 80% of the Tank's Capacity = 0 gallons

B) Secondary Containment is not Adequate

The Worst Case Discharge is Equal to the Tank's Capacity = 0 gallons

II. Multiple Tank Facilities

Not Applicable? ☐

A) All Aboveground Storage Tanks (ASTs) Lack Adequate Secondary Containment

The Worst Case Discharge is Equal to the Total Capacity of all ASTs = _____ gallons

B) Some or All ASTs Have Adequate Secondary Containment

The Total Storage Capacity of ASTs Without Adequate Containment = 0 gallons

The Capacity of the Largest AST with Adequate Containment = 15372 gallons

The Worst Case Discharge is the Sum of the Above Capacities = 15372 gallons

The Worst Case Discharge Is 15372 gallons

366.00 barrels

Worksheet to Plan Volume of Response Resources for
40 CFR 112, Appendix E

I. Background Information

A) (A) = The Worst Case Discharge in Barrels = 366.00 barrels

B) Oil Group Designation (Section 1.2.3, 1.2.8, and 1.2.9) = 1

C) Operating Area (input "Rivers and Canals" or "Inland/Nearshore" or "Great Lakes")
= great lakes

D) Oil Percentages (Table 2)

Percent Natural Dissipation			(D1)	80
Percent Recovered Floating Oil			(D2)	20
Percent Oil Onshore			(D3)	10

E) (E1) = On-Water Oil Reco = 73.20 barrels
(E2) = Shoreline Recover = 36.60 barrels

F) (F) = Emulsification Facto = 1

G) On-Water Oil Recovery Resource Mobilization Factor (Table 4) =

Tier 1	(G1)	0.15
Tier 2	(G2)	0.25
Tier 3	(G3)	0.4

II. On-Water Oil Recovery Capacity (barrels/day)

Tier 1	Tier 2	Tier 3
10.98	18.30	29.28

III. Shoreline Cleanup Volume (barrels)

Shoreline Cleanup Volum = 36.60 barrels

IV. On-Water Response Capacity by Operating Area

Date of Facility First Operation (mm/dd/yyyy): 1/2/1990

Tier 1 (J1)	Tier 2 (J2)	Tier 3 (J3)
5000.00	10000.00	20000.00

V. On-Water Amount Needed to Be Identified but not Contracted for in Advance

Tier 1	Tier 2	Tier 3
-4989.02	-9981.70	-19970.72

Facility Response Plan Field Inspection Checklist

Activity Information	
Activity Type	FRP Field Inspection
Activity Date	3/15/2012
EPA Inspector	Don Smith

Facility Information								
Facility ID:	FRP Harm Category?	√	Substantial Harm					
		√	Significant & Substantial Harm					
FRP ID:	Complex?		Yes	√	No			
	If Complex, Shared Jurisdiction?		Yes		No	√	N/A	
Facility Name:	East Storage/Splitter III							
Address:	316 S. Main							
City:	Mont Belvieu							
State:	TX						Zip: 77580	
Owner/Operator:	Enterprise Products Operating LLC							
FRP Contact:	Jon Fields							
Telephone:	281-385-4300							
Email:	jefields@eprod.com							
QI:	Brenda Ganter							
Telephone:	281-385-0510							
Email:	bganter@eprod.com							
Notes/Comments: (Include County name)								

112.20(h), 112 Appendix F Section 1.0	A. General	YES	NO	N/A
112 Appendix F Section 1.0	Copy of FRP is available at the facility	√		
112.20(h)(1), 112 Appendix F Section 1.1	Copy of Emergency Response Action Plan is available at the facility.	√		
112.20(h)(1)(vi), 112.20(h)(3)(vii), 112 Appendix F Section 1.3.5	Evacuation plan is readily available.	√		

Describe how the facility incorporates the FRP into its overall training program:

Notes

112.20(h), 112 Appendix F Section 1.3.1	B. Spill Notification	YES	NO	N/A
112,20(h)(1)(ii), 112.20(h)(3)(iii), 112 Appendix F Section 1.3.1	Spill notification call-down list contains correct telephone numbers.	√		

112,20(h)(1)(ii), 112.20(h)(3)(iii), 112 Appendix F Section 1.3.1	Emergency contact information has been verified as current.	√		
Notes				
112.20(h)(4), 112 Appendix F Section 1.4	**C. Hazard Evaluation**	**YES**	**NO**	**N/A**
112 Appendix F Section 1.4.1	Facility total storage capacity corresponds to storage capacity reported in the plan	√		
112 Appendix F Section 1.4.1	Secondary containment is adequate for all aboveground tanks	√		
112 Appendix F Sections 1.4.2 and 1.4.3	Following factors affecting response efforts are properly addressed / characterized:			
	- Discharge volume		√	
	- Proximity to downgradient water		√	
	- Proximity to fish and wildlife and sensitive environments		√	
	- Proximity to drinking water intakes		√	
	- Likelihood that discharge will travel offsite		√	
	- Location of material spilled (i.e., on concrete pad or soil)		√	
	- Type of material discharged		√	
	- Weather or aquatic conditions anticipated during adverse conditions		√	
	- Available remediation equipment		√	
	- Probability of chain reaction or failures		√	
	- Direction of spill		√	
112 Appendix F Section 1.4.4	History of all reportable discharges at the facility is maintained with the FRP	√		
Notes: ***The Plan should describe the planning scenario, considering the reasonably expected circumstances of a discharge that would affect the response efforts required. This would include any circumstances the may have not been addressed in the Plan (see comment under Discharge Scenarios below).***				
112 Appendix F Section 1.5	**D. Discharge Scenarios**	**YES**	**NO**	**N/A**
112.20(h)(5)(i), 112 Appendix F Section 1.5.2	Worst-case discharge scenario described in Plan is accurate (e.g., source and impacts)		√	
112 Appendix F Section 1.5.1	Medium discharge scenario described in Plan is accurate (e.g., source and impacts)	√		
112 Appendix F Section 1.5.1	Small discharge scenario descr bed in Plan is accurate (e.g., source and impacts)	√		
Notes ***Please clarify the WCD volume in the event the automatic well shut-off fails, including how the wells will be controlled (manual?) and the volumetric difference from the calculation presented in the Plan.***				
112.20(h)(1) and (h)(3)(ix), 112 Appendix F Sections 1.3.6 and 1.6	**E. Response Personnel**	**YES**	**NO**	**N/A**
112.20(h)(1)(i), 112 Appendix F Section 1.2	Qualified Individual (QI) information (name, title, telephone numbers) is current	√		

112.20(h)(3)(ix), 112 Appendix F Section 1.3.6	QI is aware of, and prepared to fulfill, responsibilities:	√		
112.20(h)(3)(ix)(A), 112 Appendix F Section 1.3.6	- Activate internal alarms and hazard communication systems	√		
112.20(h)(3)(ix)(B), 112 Appendix F Section 1.3.6	- Notify response personnel	√		
112.20(h)(3)(ix)(C), 112 Appendix F Section 1.3.6	- Identify character, exact source, amount, and extent of the release	√		
112.20(h)(3)(ix)(D), 112 Appendix F Section 1.3.6	- Notify and provide information to appropriate Federal, State, and local authorities	√		
112.20(h)(3)(ix)(E), 112 Appendix F Section 1.3.6	- Assess interaction of substances with water and/or other substances stored at facility and notify on-scene response personnel of assessment	√		
112.20(h)(3)(ix)(F), 112 Appendix F Section 1.3.6	- Assess possible hazards to human health and the environment	√		
112.20(h)(3)(ix)(G), 112 Appendix F Section 1.3.6	- Assess and implement prompt removal actions	√		
112.20(h)(3)(ix)(H), 112 Appendix F Section 1.3.6	- Coordinate rescue and response actions	√		
112.20(h)(3)(ix)(I), 112 Appendix F Section 1.3.6	- Access company funding to initiate cleanup activities	√		
112.20(h)(3)(ix)(J), 112 Appendix F Section 1.3.6	- Direct cleanup activities	√		
112 Appendix F Section 1.2	QI has specific response training experience	√		
112 Appendix F Section 1.6	Facility personnel are familiar with procedures for detecting a discharge	√		
Notes				

112.20, 112 Appendices E and F	**F. Response Equipment**	**YES**	**NO**	**N/A**
112 Appendix E Section 3.0	Required response resources for a small discharge are provided.	√		
112 Appendix E Section 3.3.1	- 1,000 ft of boom and, if marine transfer facility, boom equal to twice the length of largest vessel	√		
112 Appendix E Section 3.3.1	- Capacity of deploying boom within 1 hour of small discharge	√		
112 Appendix E Section 3.3.2	- Response equipment capable of being deployed within 2 hours of a small discharge	√		
112 Appendix E Section 3.3.2	- Response equipment daily recovery capacity equal to the total volume of small discharge	√		

112 Appendix E Section 12.2	- Temporary storage capacity equal to twice the volume of the small discharge	√		
112 Appendix E Section 4.0	Required response resources for a medium discharge are provided:	√		
112 Appendix E Section 4.5	- Sufficient quantities of boom for containment and collection and for protection	√		
112 Appendix E Section 4.4	- Response equipment daily recovery capacity equal to 50% of total volume of small discharge	√		
112.20(h)(3)(ii), 112 Appendix F Section 1.3.4	Facility has current signed contract with response contractor and/or membership in cleanup co-op.	√		
	- If YES, facility has evidence of contractor's equipment deployment exercises (annually)	√		
112.20, 112 Appendix F	Facility has its own response equipment.	√		
112.20(h)(8)(i) and (ii), 112 Appendix F Section 1.3.3, 112 Appendix F Section 1.8.1.2	- If YES, facility response equipment is regularly inspected (check logs)	√		
112 Appendix F Section 1.3.2	Following equipment is provided and, if so, is operational, accessible, and has adequate capacity:	√		
112 Appendix F Section 1.3.2(1)	- Skimmers		√	
112 Appendix F Section 1.3.2(1)	- Pumps	√		
112 Appendix F Section 1.3.2(2)	- Containment booms	√		
112 Appendix F Section 1.3.2(5)	- Sorbents	√		
112 Appendix F Section 1.3.2(3)	- Chemical countermeasures			√
112 Appendix F Section 1.3.2(7)	- Communication equipment	√		
112 Appendix F Section 1.3.2(8)	- Firefighting equipment	√		
112 Appendix F Section 1.3.2(8)	- Personal protective equipment	√		
112 Appendix F Section 1.3.2(9)	- Other equipment, boots, motors, etc.	√		
112 Appendix F Section 1.7.2	Procedures have been established for recovering, reusing, decontaminating or disposing of materials	√		

Notes

The Plan indicates the facility does not maintain spill response equipment, and OSRO's will respond to a Worst Case Discharge. Enterprise maintains two response trailers containing equipment that may be utilized in the event of a discharge.

112 Appendix F Section 1.8.1	**G. Self Inspection**	**YES**	**NO**	**N/A**
112 Appendix F Section 1.8.1	Records of tank inspections are maintained (check last 5 years of records)	√		
	The following industry standard(s) are used to inspect aboveground bulk storage containers:	√		
	- Steel Tank Institute (STI) SP-1			√

	- American Petroleum Institute (API) Standard 653			√
	- Hybrid program developed by Professional Engineer			√
	- Other (specify in notes/comments section below)			√
112 Appendix F Section 1.8.1	Records of secondary containment inspections are maintained (check last 5 years of records)	√		
112.20(h)(6), 112 Appendix F Section 1.6	Automatic discharge detection/prevention systems are inspected/tested regularly (overfill alarms, secondary containment sensors)	√		
112 Appendix F Section 1.8.3	Discharge prevention meetings are held periodically (check last 5 years of records)	√		
Notes				
112.20(h)(8)(ii), 112.21, Appendix F Section 1.8.2	**H. Drills/Exercises**	**YES**	**NO**	**N/A**
112.21(c), 112 Appendix F Section 1.8.2	Facility drills/exercises program is based on National Preparedness for Response Exercise Program (PREP) Guidelines	√		
	- If NO, alternative program has been approved by the EPA RA.			√
	QI notification drills are performed (quarterly)			√
	Spill Management Team Tabletop Exercises are performed (annually)			√
	Facility Equipment Deployment Exercises are performed (semi-annually)			√
	Unannounced Exercises are performed (annually)			√
	Area Exercises are performed			√
Notes				
112.20(h)(9), 112 Appendix F Section 1.9	**I. Diagrams**	**YES**	**NO**	**N/A**
112 Appendix F Section 1.9(1)	Site plan diagram appears to accurately represent the facility	√		
112 Appendix F Section 1.9(2)	Drainage plan appears to accurately represent the facility	√		
Notes				

Field Notes	
Area	**Notes/Remarks**

Photo Documentation Log	
Photo Number	**Description (include date, location and direction)**
	See separate Photo Documentation Log

Facility Response Plan
Plan Review Checklist
For Verifying Compliance with Facility Response Plan Requirements

Activity Information		
Activity Type		FRP Plan Review
Reason for Review		Initial Plan Submittal (new FRP)
		5-year Review
		Plan Amendment (note type)
	√	Other (note other reason)
		Note: ***Pre-inspection review***
Activity Date		3/15/2012
EPA Inspector		***Mike Clonts***

112.20(h)(11)	**A. Response Plan Cover Sheet (sec. 2.0)**	YES	NO	N/A
	General Information (sec 2.1)			
	Facility name	√		
	Facility address	√		
	Facility telephone number	√		
	Mailing address (if different from facility address)	√		
	Facility owner/operator and address **(recommended)**	√		
	Facility owner telephone **(recommended)**	√		
	Dun & Bradstreet number	√		
	Longitude (degrees, minutes, seconds)	√		
	Latitude (degree, minutes, seconds)	√		
	North American Industrial Classification System (NAICS) code	√		
	Facility start up date **(recommended)**	√		
	Facility acres **(recommended)**	√		
	Name of protected waterway or environmentally sensitive area	√		
	Distance to navigable water	√		
	Worst case discharge amount (gallons)	√		
	Maximum oil storage capacity (gallons)	√		
	Largest aboveground storage tank (AST) capacity (gallons)	√		
	Total number of ASTs	√		
	Total number of underground storage tanks (USTs)			√
	Total UST storage			√
	Total storage of drums and transformers that contain oil			√
	Number of surface impoundments and total storage of surface impoundments			√
	Applicability of Substantial Harm Criteria (sec.2.2)			
	Attachment C-1 with answer to each applicability question	√		
	Documentation of reliability and analytical soundness of alternate formula			√
Please use the following space to note any missing or incomplete information.				
	Certification (sec. 2.3)			

	Plan holder certification is included (contains signature, title, and date)	√		
Please use the following space to note any missing or incomplete information.				
	Verification of Contract (sec. 2.4)			
	Plan holder certification is included (contains signature, title, and date)	√		
Please use the following space to note any missing or incomplete information. ***Review of the FRP was conducted in conjunction with the Enterprise, Emergency Preparedness Plan (Red Book)***				
112.20(h)(1)	**B. Emergency Response Action Plan (ERAP) (sec. 1.1)**	YES	NO	N/A
112.20(h)(1)	Separate Section of FRP	√		
112,20(h)(1)(i),	Qualified Individual (QI) Information (sec. 1.2)	√		
112,20(h)(1)(ii), 112.20(h)(3)(iii)	Emergency Notification List (sec. 1.3.1)	√		
	Spill Response Notification Form (sec. 1.3.1)	√		
112.20(h)(1)(iv)	Response Equipment List and Location (sec. 1.3.2)			√
112.20(h)(1)(iv)	Response Equipment Testing and Deployment (sec. 1.3.4)			√
112.20(h)(1)(v)	Facility Response Team List (sec. 1.3.4)		√	
112.20(h)(1)(vi)	Evacuation Plan (sec. 1.3.5)	√		
112.20(h)(1)(vii)	Immediate Actions (sec. 1.7.1)	√		
112.20(h)(1)(viii)	Facility Diagrams (sec. 1.9)	√		
	*The sections above should be extracted from the more detailed corresponding sections of the plan.			
Please use the following space to note any missing or incomplete information in the ERAP. ***See corresponding sections of this checklist for information on items marked "NO" above.***				
112.20(h)(2)	**C. Facility Information (sec. 1.2)**	YES	NO	N/A
	Facility name (sec. 1.2.1)	√		
	Street address	√		
	City, state, zip code	√		
	County	√		
	Phone number	√		
	Latitude/longitude (sec. 1.2.2)	√		
	Wellhead protection area (sec. 1.2.3)		√	
	Owner/operator (both names included, if different) (sec. 1.2.4)	√		
	QI Information (sec. 1.2.5)	√		
	-Name, position, street address, phone numbers	√		
	- Description of specific response training experience	√		
	Oil storage start-up date (sec. 1.2.6)	√		
	Facility operations description (sec. 1.2.7)	√		
	North American Industrial Classification System (NAICS) or Standard Industrial Classification code (SIC)	√		
	Dates and types of substantial expansion (sec. 1.2.8)			
Please use the following space to note any missing or incomplete information in Section 1.2 of the Plan and, to the extent possible, assess the accuracy of the information provided based on field inspection. ***The items checked "NO" above, are not addressed or inadequately addressed in the Plan. The Plan must be amended to include these items.***				
112.20(h)(1) and (3)	**D. Emergency Response Information (sec. 1.3)**	YES	NO	N/A
	Notification (sec. 1.3.1)			
	Emergency Notification Phone List		√	
	National Response Center phone number	√		

112.20(h)(1)(i)	QI (day and evening) phone numbers	√		
	Company response team (day and evening) phone numbers	√		
	Federal On-Scene Coordinator (OSC) and/or Regional Response Center (day and evening) phone numbers		√	
	Local response team phone numbers (fire department/cooperatives)	√		
	Fire marshal (day and evening) phone numbers	√		
	State emergency response phone number(s)	√		
	State Police phone number	√		
	State Emergency Response Commission (SERC) phone number	√		
	Local emergency planning committee (LEPC) phone number	√		
	Wastewater treatment facility(s) name and phone number (**recommended**)			√
	Local water supply system (day and evening) phone numbers	√		
	Weather report phone number	√		
	Local television/radio phone number(s) for evacuation notification	√		
112.20(h)(3)(i)	Spill response contractor(s)	√		
	Factories/Utilities with water intakes (**recommended**)	√		
	Trustees of sensitive areas (**recommended**)			√
	Hospital phone number	√		
	Spill Response Notification Form			
	Reporter's name, position and phone number	√		
	Company information	√		
	Incident description (source/cause)	√		
	Material (were materials discharged?)	√		
	Response action (meeting federal obligations to report, calling for responsible party, time called)	√		
	Impact	√		
	Date/time of incident, incident address/location, nearest cit,/state/count,/zi, code, distance from city/units of measure/direction from city, township, range, borough, container type/tank oil storage capacity	√		
	Units of measure, facility oil storage capacity/units of measure, facility longitude and latitude	√		
Please use the following space to note any missing or incomplete information in Section 1.3 of the Plan. Please use to assess the accuracy of the information provided based on field inspection. ***The EPA Region 6 telephone number listed in the plan is incorrect. It is more appropriate to list the EPA Region 6, 24 hour, hotline number of 1-866- 372-7745 (1-866-EPA-SPILL).***				
112.20(h)(1)(iv), 112.2	**Response Equipment (sec 1.3.2)**			
	Equipment Information			
	Equipment list	√		
	Equipment location	√		
	Release handling capabilities and limitations (e.g., launching sites)	√		
Please use the following space to note any missing or incomplete information. ***Page 5-1 of the Plan indicates the facility does not maintain spill response equipment, and OSRO's will respond to a Worst Case Discharge. Enterprise maintains two response trailers containing equipment that may be utilized in the event of a discharge. This equipment is listed in the Plan.***				
112.20(h)(3)(vi)	**E. Response Equipment List (Identify if Facility, OSRO, CO-OP owned by letters O, F, or C) (sec. 1.3.2)**	YES	NO	N/A
	Skimmers/pumps (operational status, type/model/year, number or quantity, capacity, daily effective recovery rate, storage location)	*O, F*		
	Boom (containment boom: operational status, year, number, skirt size)	*O, F*		
	Boom (sorbent boom: operational status, type/model/year, number, size (length))	*O, F*		

	Chemical countermeasure agents stored	O		
	Sorbents (type, year purchased, amount, storage location)	O, F		
	Hand tools (type, quantity, storage location)	O, F		
	Communications equipment (operational status, type and year, quantity, storage location)	O, F		
	Fire Fighting and Personnel Protective Equipment	O, F		
	Boats and Motors (operational status, type, and year, quantity, storage location)	O, F		
	Other (e.g., heavy equipment, cranes, dozers, etc.) (operational status, type and year, quantity, storage location)	O, F		
	Equipment Location	O, F		
	Amount of oil that emergency response equipment can handle and limitations (e.g., launching sites) must be descr bed.	O		
Please use the following space to note any missing or incomplete information.				
112.20(h)(8)(i) and (ii)	**F. Response Equipment Testing and Deployment Drill Log (sec. 1.3.3)**	YES	NO	N/A
	Date of last inspection or equipment test	√		
	Inspection Frequency	√		
	Date of Last Deployment	√		
	Deployment Frequency	√		
	OSRO Certification (Note: Facilities without facility owned response equipment must ensure that the Oil Spill Removal Organization that is identified in the response plan to provide this response equipment certifies that the deployment exercises have been met)	√		
Please use the following space to note any missing or incomplete information in Section 1.3.3 of the Plan and verify that the log information is up-to-date during the field inspection.				
	G. Personnel (sec. 1.3.4)	YES	NO	N/A
112.20(h)(3)(v), 112.20	**Emergency Response Personnel Information** (Personnel whose duties involve responding to emergencies, including oil discharges, even when they are not present at the site)			
	Response personnel name(s)		√	
	Facility response team title/position		√	
	Response personnel phone numbers (work/home, other)		√	
	Response personnel response time		√	
	Response personnel respons bility		√	
	Response personnel training (type and date)		√	
112.20(h)(3)(i)	**Emergency Response Contractor Information**		√	
	Response contractor name (s)	√		
	Response contractor phone numbers	√		
	Response contractor response time		√	
112.20(h)(3)(ii)	Response contractor evidence of contractual arrangements		√	
	Facility Response Team Information (Composed of Emergency Response Personnel and Emergency			
	Response team member name(s)		√	
	Response team member job function		√	
	Response team member response time		√	
	Response team member phone/pager number		√	

	Name of emergency response contractor (contractors providing facility response team services may be different than contractors providing oil spill response services)	√		
	- Response time	√		
	- Phone/pager		√	
Please use the following space to note any missing or incomplete information in Section 1.3.4 of the Plan. ***Appendix B of the FRP references the "Red Book" for the items checked "No" above. This information could not be found. The Plan must be amended to include these items.***				
112.20(h)(1)(vi), 112.20(h)(3)(vii)	**H. Evacuation Plans (sec. 1.3.5)**	YES	NO	N/A
	Facility Evacuation Plan (sec. 1.3.5.1)			
	Location of stored materials	√		
	Hazard imposed by spilled materials	√		
	Spill flow direction	√		
	Prevailing wind directions and speed	√		
	Water currents, tides, or wave conditions (if applicable)	√		
	Arrival route of emergency response personnel and response equipment	√		
	Evacuation routes	√		
	Alternative routes of evacuation	√		
	Transportation of injured personnel to nearest emergency medical facility	√		
	Location of alarm/notification systems	√		
	Centralized check-in area for roll call	√		
	Mitigation command center location	√		
	Location of shelter at facility	√		
112.20(h)(3)(vii), 112.20(h)(1)(vi)	Community Evacuation Plans referenced (sec. 1.3.5.3)	√		
Please use the following space to note any missing or incomplete information in Section 1.3.5 of the plan and to assess the accuracy of the information ¸ rovided based on field ins¸ ection.				
112.20(h)(3)(ix)	**I. Qualified Individual's Duties (sec. 1.3.6)**	YES	NO	N/A
112.20(h)(3)(ix)(A)	Activate internal alarms and hazard communication systems	√		
112.20(h)(3)(ix)(B)	Notify Response Personnel	√		
112.20(h)(3)(ix)(C)	Identify character, exact source, amount, and extent of the release	√		
112.20(h)(3)(ix)(D)	Notify and provide information to appropriate Federal, State and local authorities	√		
112.20(h)(3)(ix)(E)	Assess interaction of spilled substance with water and/or other substances stored at facility and notify on-scene response personnel of assessment	√		
112.20(h)(3)(ix)(F)	Assess possible hazards to human health and the environment	√		
112.20(h)(3)(ix)(G)	Assess and implement prompt removal actions		√	
112.20(h)(3)(ix)(H)	Coordinate rescue and response actions		√	
112.20(h)(3)(ix)(I)	Access company funding to initiate cleanup activities		√	
112.20(h)(3)(ix)(J)	Direct cleanup activities		√	
Please use the following space to note any missing or incomplete information. ***The items checked "NO" above, are not addressed or inadequately addressed in the Plan. The Plan must be amended to include these items.***				
112.20(h)(4)	**J. Hazard Evaluation (sec. 1.4)** *(See Section II, Appendix A)*	YES	NO	N/A
	Hazard Identification (sec. 1.4.1)			

	Tank Above Ground and Below Ground			
	Tanks (List Tanks by Number, Product and Shell Capacity in the space below)			
	Tank number(s)	√		
	Substance(s) stored	√		
	Quantity(s) stored	√		
	Tank type(s)/year(s) of construction	√		
	Shell capacity(s)	√		
	Failure(s)/cause(s)	√		
	Surface Impoundments (SI)			
	SI Number(s)			√
	Substance(s) Stored			√
	Quantity(s) Stored			√
	Surface area(s)/year(s) of construction			√
	Maximum capacity(s)			√
	Failure(s)/cause(s)			√
	Labeled schematic drawing	√		
	Description of transfers (loading and unloading) and volume of material	√		
	Description of daily operations	√		
	Secondary containment volume(s)	√		
	Normal daily throughput of the facility	√		
Please use the following space to note any missing or incomplete information in Section 1.4.1 of the plan and to assess the accuracy of the information in Section 1.4.1 of the plan and to assess the accuracy of the information based on field inspection. ***The facility maintains 6 (six) diesel AST's with a total capacity of 3,990 gallons plus Natural Gasoline and Diesel stored in Underground Caverns with a total capacity of 105,435,046 gallons.***				
112.20(h)(4)	**K. Vulnerability Analysis (sec. 1.4.2)** (See Appendix A - Calculation of the	YES	NO	N/A
	Analysis of potential effects of an oil spill on vulnerable areas. (Attachment C-III to Appendix C to this part provides a method that owners or operators shall use to determine appropriate distances from the facility to fish and wildlife and sensitive environments. Owners or operators can use a comparable formula that is considered acceptable by the Regional Administrator (RA). If a comparable formula is used, documentation of the reliability and analytical soundness of the formula must be attached to the Response Plan Cover Sheet.)			
	Water intakes (drinking, cooling or other)	√		
	Schools	√		
	Medical facilities	√		
	Residential areas	√		
	Businesses	√		
	Wetlands or other sensitive environments	√		
	Fish and wildlife	√		
	Lakes and streams	√		
	Endangered flora and fauna	√		
	Recreational areas	√		
	Transportation routes (air, land, and water)	√		
	Utilities	√		
	Other applicable areas of economic importance (list below)	√		

Please use the following space to note any missing or incomplete information in Section 1.4.2 of the plan and to assess the accuracy of the information based on field inspection.

112.20(h)(4)	**L. Analysis of the Potential for an Oil Spill (sec. 1.4.3)**	YES	NO	N/A
	Description of likelihood of release occurring	√		
	Oil spill history for the life of the facility	√		
	Horizontal range of potential spill	√		
	Vulnerability to natural disaster	√		
	Tank age	√		
	Other factors (e.g., unstable soils, earthquake zones, Karst topography, etc.)	√		

Please use the following space to note any missing or incomplete information in Section 1.4.3 of the Plan and to assess the accuracy of the information based on field inspection.

112.20(h)(4)	**M. Facility Reportable Oil Spill History Description (sec. 1.4.4)**	YES	NO	N/A
	Date of discharge(s)	√		
	List of discharge causes	√		
	Material(s) discharged	√		
	Amount of discharges (gallons)	√		
	Amount that reached navigable waters (if applicable)	√		
	Effectiveness and capacity of secondary containment	√		
	Clean-up actions taken	√		
	Steps taken to reduce possibility of reccurrence	√		
	Total oil storage capacity of tank(s) or impoundment(s) from which material discharged	√		
	Enforcement actions	√		
	Effectiveness of monitoring equipment	√		
	Description(s) of how each oil discharge was detected	√		

Please use the following space to note any missing or incomplete information in Sectio 1.4.4 of the Plan.

	N. Discharge Scenarios (sec. 1.5)	YES	NO	N/A
	Small Discharges (sec. 1.5.1) (Description of small discharges addressing facility operations and components including but not limited to (see. 1.5.1.1):			
	Loading and unloading operations			√
	Facility maintenance operation			√
	Facility piping	√		
	Pumping stations and sumps	√		
	Oil storage location			√
	Vehicle refueling operations			√
	Age and condition of facility components	√		
	Small volume discharge calculation for a facility	√		
	Facility-specific spill potential analysis		√	
	Average most probable discharge for complexes			√
	1,000 feet of boom (1 hour deployment time)	√		
	Correct amount of boom for complexes			√
	Oil recovery devices equal to small discharge (2 hour recovery time)	√		
	Oil storage capacity for recovered material	√		

	Scenarios Affected by the Response Efforts (sec. 1.5.1.2)			
	Size of the discharge	√		
	Proximity to downgradient wells, waterways, and drinking water intakes		√	
	Proximity to fish and wildlife and sensitive environments		√	
	Likelihood that the discharge will travel offsite (i.e., topography, drainage)	√		
	Location of the material discharged (i.e., on a concrete pad or directly on the soil)		√	
	Material discharged		√	
	Weather or aquatic conditions (i.e., river flow)		√	
	Available remediation equipment	√		
	Probability of a chain reaction of failures		√	
	Direction of discharge pathway	√		
	Medium Discharges (sec. 1.5.1) (Description of medium discharges scenarios addressing facility operations and components including but not limited to (sec. 1.5.1.1):			
	Loading and unloading operations			√
	Facility maintenance operation			√
	Facility piping	√		
	Pumping stations and sumps	√		
	Oil storage location			√
	Vehicle refueling operations			√
	Age and condition of facility components	√		
	Medium volume discharge calculation for a facility	√		
	Facility-specific spill potential analysis		√	
	Maximum most probably discharge for complexes			√
	Oil recovery devices equal to medium discharge	√		
	Availability of sufficient quantity of boom	√		
	Oil storage capacity for recovered material	√		
	Scenarios Affected by the Response Efforts (sec. 1.5.1.2)			
	Size of the discharge	√		
	Proximity to downgradient wells, waterways, and drinking water intakes		√	
	Proximity to fish and wildlife and sensitive environments		√	
	Likelihood that the discharge will travel offsite (i.e., topography, drainage)		√	
	Location of the material discharged (i.e., on a concrete pad or directly on the soil)		√	
	Material discharged		√	
	Weather or aquatic conditions (i.e., river flow)		√	
	Available remediation equipment	√		
	Probability of a chain reaction of failures		√	
	Direction of discharge pathway		√	
Please use the following space to note any missing or incomplete information in Section 1.5.1 of the Plan and to assess the accuracy of the information provided based on field inspection. ***The FRP Discharge Scenarios for small and medium releases were very limited in content, were not facility specific, and did not address the required components. The FRP checklist components marked "NO" above, were not addressed or inadequately addressed and require immediate correction.***				
112.20(h)(5)(i)	**O. Worst Case Discharge (sec. 1.5.2)** (See Appendix A) (When planning	YES	NO	N/A
	Facility Specific Worst Case Discharge Scenario		√	

	Description of worst case discharges scenarios addressing facility operations and components including but not limited to (sec. 1.5.1.1):			
	Loading and unloading operations			√
	Facility Maintenance Operation			√
	Facility Piping			√
	Pumping stations and sumps	√		
	Oil storage location			√
	Vehicle refueling operations			√
	Age and condition of facility components	√		
112 Appendix D	Correct Worst Case Discharge (WCD) calculation for specific type of facility	√		
	Correct WCD calculation for complexes			√
112 Appendix E	Sufficient response resources for WCD	√		
	Sources and quantity of equipment for response to WCD	√		
	Oil storage capacity for recovered material	√		
	Scenarios Affected by the Response Efforts (sec. 1.5.1.2)			
	Size of the discharge	√		
	Proximity to downgradient wells, waterways, and drinking water intakes		√	
	Proximity to fish and wildlife and sensitive environments	√		
	Likelihood that the discharge will travel offsite (i.e., topography, drainage)	√		
	Location of the material discharged (i.e., on a concrete pad or directly on the soil)	√		
	Material discharged		√	
	Weather or aquatic conditions (i.e., river flow)	√		
	Available remediation equipment	√		
	Probability of a chain reaction of failures		√	
	Direction of discharge pathway	√		

Please use the following space to note any missing or incomplete information in Section 1.5.2 of the Plan and to assess the accuracy of the information provided based on field inspection. ***The FRP Discharge Scenarios for a worst- case release was very limited in content and did not address the required components. The FRP checklist components marked "No" were not addressed or inadequately addressed and require immediate correction.***

112.20(h)(6)	**P. Discharge Detection Systems (sec. 1.6)**	YES	NO	N/A
	Discharge Detection by Personnel (sec. 1.6.1)			
	Description of procedures and personnel for spill detection	√		
	Description of facility inspections	√		
	Description of initial response actions	√		
	Emergency Response Information (referenced)	√		

Please use the following space to note any missing or incomplete information in Section 1.6.1 of the plan.

Section II, 112.7(e)(5)(iii)(D), 112.7(e)(5(iii), 112.7(e)(2)(viii), 112.7(e)(7)(v), Appendix A	**Automated Discharge Detection (sec. 1.6.2)**	√		
	Description of automatic spill detection equipment, including overfill alarms and secondary containment sensors	√		
	Description of alarm verification procedures and subsequent actions	√		

	Initial response actions	√		
Please use the following space to note any missing or incomplete information in Section 1.6.2 of the Plan.				
112.20(h)(7), Appendix E	**Q. Plan Implementation (sec. 1.7)**	YES	NO	N/A
	Identification of response resources for small, medium, and worst case spills (sec. 1.7.1)			
	Description of response actions	√		
	Accessibility of proper response personnel and equipment	√		
	Emergency plans for spill response	√		
	Additional response training	√		
	Additional contracted help	√		
	Access to additional response equipment/experts	√		
	Ability to implement plan, including response training and practice drills	√		
	Temporary storage	√		
	Recommended form detailing immediate action for small, medium and Worst Case spills (sec. 1.7.1.2A) (stop the product flow, warn personnel, shut off ignition sources, initiate containment, notify NRC, notify OSC, notify (as appropriate))	√		
Please use the following space to note any missing or incomplete information in Section 1.7.1 of the Plan.				
	Disposal Plan (sec. 1.7.2)			
	Description of procedures for recovering, reusing, decontaminating or disposing of materials	√		
	Materials addressed in Disposal Plan (recovered product, contaminated soil, contaminated equipment and materials (including drums tank parts, valves and shovels), personnel protective equipment, decontamination solutions, absorbents, spent chemicals))	√		
	Plan prepared in accordance with any federal, state, and/or local regulations	√		
	Plan addresses permits required to transport or dispose of recovered materials	√		
Please use the following space to note any missing or incomplete information in Section 1.7.2 of the Plan.				
Section II, 112.7(e)(1), 112.7(e)(7), Appendix A	**Containment and Drainage Planning (sec. 1.7.3)**			
	Description of containing/controlling a spill through drainage	√		
	Containment and drainage plan available			√
	Available volume of containment	√		
	Drainage route from oil storage and transfer areas			√
	Construction materials used in drainage troughs			√
	Type and number of valves and separators in drainage system			√
	Sump pump capacities			√
	Containment capacities of weirs and booms and their location			√
	Other cleanup materials			√
Please use the following space to note any missing and incomplete information in Section 1.7.3 of the Plan and to assess the accuracy of the information provided during field inspection.				

	R. Self-Inspection, Training, and Meeting Logs (sec. 1.8)	YES	NO	N/A
	Facility Self-Inspection (sec. 1.8.1)			

Section II, 112.7(e)(8)	Records of tank inspections with dates (tank leaks, tank foundations, tank Piping) contained or cross-referenced in Plan or maintained electronically for five years	√		
Section II, 112.7(e)(8)	Records of secondary containment inspections with dates (dike or berm system, secondary containment, retention and drainage ponds) contained or cross-referenced in Plan or maintained electronically for five years	√		
112.20(h)(8)(i)	Response equipment inspection			
	Response equipment checklist (sec. 1.8.1.2)	√		
	Equipment inventory (item and quantity)	√		
	Storage location (time to access and respond)	√		
	Accessibility (time to access and respond)	√		
	Operational status/condition	√		
	Actual use/testing (last test date and frequency of testing)	√		
	Shelf life (present age, expected replacement date)	√		
	- Inspection date	√		
	- Inspector's signature	√		
	- Inspection records maintained for 5 years	√		
	- Response equipment inspection log (inspector, date, comments)	√		
Please use the following space to note any missing or incomplete information in Section 1.8 of the Plan and to assess the accuracy of the information. ***Page 5-1 of the Plan indicates the facility does not maintain spill response equipment, and OSRO's will respond to a Worst Case Discharge. Enterprise maintains two response trailers containing equipment that may be utilized in the event of a discharge.***				
	Facility Drills/Exercises (sec. 1.8.2)			
	Description of drill/exercise program based on National Preparedness for Response Exercise Program (PREP) guidelines or other comparable program	√		
	- If "no" alternative program has been approved by EPA RA (describe program below)			√
	QI notification drill			√
	Spill management team tabletop exercise			√
	Equipment deployment exercise			√
	Unannounced exercise			√
	Area exercise			√
	Description of evaluation procedures for drill program			√
	Qualified Individual notification drill log (sec. 1.8.2.1)			
	Date, company, qualified individual, other contacted, emergency scenario, evaluation	√		
	Spill management team tabletop drill log (sec. 1.8.2.2)			
	Date, company, QI, participants, emergency scenario, evaluation, changes to be implemented, time table for implementation	√		
Please use the following space to note any missing or incomplete information in Section 1.8.2 of the Plan and to assess the accuracy of the information provided based on field inspection.				
	Response Training (sec. 1.8.3)			
	Description of response training program (including topics)	√		
	Personnel response training logs (name, response training date/and number of hours, prevention training date/and number of hours)	√		
	Discharge prevention meeting logs (date, attendees)	√		
Please use the following space to note any missing or incomplete information in Section 1.8.3 of the Plan and verify that the log information is up-to-date during the field inspection.				

	S. Diagrams (sec. 1.9)	YES	NO	N/A
	Site Plan Diagram			
	Entire facility to scale	√		
	Above and below-ground storage tanks	√		
	Contents and capacities of bulk oil storage tanks	√		
	Contents and capacities of drum storage areas			√
	Contents and capacities of surface impoundments			√
	Process buildings	√		
	Transfer areas	√		
	Location and capacity of secondary containment systems			√
	Location of hazardous materials	√		
	Location of communications and emergency response equipment			√
	Location of electrical equipment that might contain oil	√		
	If the facility is a complex facility, the interface between EPA and other regulating agencies			√
Please use the following space to note any missing or incomplete information in the Site Plan diagram and to assess the accuracy of the diagram based on field inspection.				
	Site Drainage Plan Diagram			
	Major sanitary and storm sewers, manholes, and drains	√		
	Weirs and shut-off valves			√
	Surface water receiving streams			√
	Fire fighting water sources	√		
	Other utilities			√
	Response personnel ingress and egress	√		
	Response equipment transportation routes	√		
	Direction of spill flow from discharge points	√		
Please use the following space to note any missing or incomplete information in the Site Drainage Plan diagram and to assess the accuracy of the diagram based on field inspection.				
	Site Evacuation Plan Diagram			
	Site plan diagram with evacuation routes	√		
	Location of evacuation regrouping areas	√		
Please use the following space to note any missing or incomplete information in the Site Evacuation Drainage Plan diagram and to assess the accuracy of the diagram based on field inspection.				

Section II, 112.7(e)(9)	T. Site Security (sec. 1.10)	YES	NO	N/A
	• Description of facility security	√		
	(Emergency cut-off locations, enclosures, guards and their duties, lighting, valve and pump locks, pipeline connection caps)	√		
Please use the following space to note any missing or incomplete information in Section 1.10 of the plan and to assess the accuracy of the information provided based on field inspection.				
Please use the following space to describe overall impressions of the facility response plan (i.e., functional, workable). A set of questions is provided in Appendix C to assist the inspector is assessing overall Plan adequacy.				
Reviewed by:	*Mike Clonts*			
Date:	*3/15/2012*			

U.S. ENVIRONMENTAL PROTECTION AGENCY
SPCC FIELD INSPECTION AND PLAN REVIEW CHECKLIST

ONSHORE FACILITIES (EXCLUDING OIL DRILLING, PRODUCTION AND WORKOVER)

Overview of the Checklist

This checklist is designed to assist EPA inspectors in conducting a thorough and nationally consistent inspection of a facility's compliance with the Spill Prevention, Control, and Countermeasure (SPCC) rule at 40 CFR part 112. It is a required tool to help federal inspectors (or their contractors) record observations for the site inspection and review of the SPCC Plan. While the checklist is meant to be comprehensive, the inspector should always refer to the SPCC rule in its entirety, the SPCC Regional Inspector Guidance Document, and other relevant guidance for evaluating compliance. This checklist must be completed in order for an inspection to count toward an agency measure (i.e., OEM inspection measures or GPRA). The completed checklist and supporting documentation (i.e. photo logs or additional notes) serve as the inspection report.

This checklist addresses requirements for onshore facilities including Tier II Qualified Facilities (excluding facilities involved in oil drilling, production and workover activities) that meet the eligibility criteria set forth in §112.3(g)(2).

Separate standalone checklists address requirements for:
Onshore oil drilling, production, and workover facilities including Tier II Qualified Facilities as defined in §112.3(g)(2)
Offshore drilling, production and workover facilities; and
Tier I Qualified Facilities (for facilities that meet the eligibility criteria defined in §112.3(g)(1))

Qualified facilities must meet the rule requirements in §112.6 and other applicable sections specified in §112.6, except for deviations that provide environmental equivalence and secondary containment impracticability determinations as allowed under §112.6.

The checklist is organized according to the SPCC rule. Each item in the checklist identifies the relevant section and paragraph in 40 CFR part 112 where that requirement is stated.

- Sections 112.1 through 112.5 specify the applicability of the rule and requirements for the preparation, implementation, and amendment of SPCC Plans. For these sections, the checklist includes data fields to be completed, as well as several questions with "yes," "no" or "NA" answers.
- Section 112.6 includes requirements for qualified facilities.
- Section 112.7 includes general requirements that apply to all facilities (unless otherwise excluded).
- Sections 112.8 and 112.12 specify requirements for spill prevention, control, and countermeasures for onshore facilities (excluding production facilities).

The inspector needs to evaluate whether the requirement is addressed adequately or inadequately in the SPCC Plan and whether it is implemented adequately in the field (either by field observation or record review). For the SPCC Plan and implementation in the field, if a requirement is addressed adequately, mark the "Yes" box in the appropriate column. If a requirement is not addressed adequately, mark the "No" box. If a requirement does not apply to the particular facility or the question asked is not appropriate for the facility, mark the "NA" box. Discrepancies or descriptions of inspector interpretation of "No" vs. "NA" may be documented in the comments box subsequent to each section. If a provision of the rule applies only to the SPCC Plan, the "Field" column is shaded.

Space is provided in each section to record comments. Additional space is available on the comments page at the end of the checklist. Comments should remain factual and support the evaluation of compliance.

Appendices

- Appendix A is for recording information about containers and other locations at the facility that require secondary containment.
- Appendix B is a checklist for documentation of the tests and inspections the facility operator is required to keep with the SPCC Plan.
- Appendix C is a checklist for oil spill contingency plans following 40 CFR 109. Unless a facility has submitted a Facility Response Plan (FRP) under 40 CFR 112.20, a contingency plan following 40 CFR 109 is required if a facility determines that secondary containment is impracticable as provided in 40 CFR 112.7(d). The same requirement for an oil spill contingency plan applies to the owner or operator of a facility with qualified oil-filled operational equipment that chooses to implement alternative requirements instead of general secondary containment requirements.

FACILITY INFORMATION			
FACILITY NAME: East Storage/Splitter III No formal inspection conducted - drive through facility by all 6 AST's (1,680 gallons, or less)			
LATITUDE: 29.8380555	LONGITUDE: -94.891111	Section/Township/Range: N/A	
FRS#:	OIL DATABASE ID NO:	ICIS#:	
ADDRESS: 316 S. Main			
CITY: Mont Belvieu	STATE: TX	ZIP: 77580	COUNTY: Chambers
MAILING ADDRESS (IF DIFFERENT FROM FACILITY ADDRESS – IF NOT, PRINT "SAME"): P. O. Box 573			
CITY: Mont Belvieu	STATE: TX	ZIP: 77580-0573	COUNTY: Chambers
TELEPHONE: 281-385-0510	FACILITY REPRESENTATIVE NAME: Brenda Gantner		
OWNER NAME: Enterprise Products Operating LLC			
OWNER ADDRESS: 316 S. Main			
CITY: Mont Belvieu	STATE: TX	ZIP: 77580	COUNTY: Chambers
OWNER CONTACT PERSON: Brenda Gantner			
TELEPHONE: 281-385-0510	FAX:	EMAIL: bganter@eprod.com	
FACILITY OPERATOR NAME (IF DIFFERENT FROM OWNER – IF NOT, PRINT "SAME"): Same			
OPERATOR ADDRESS:			
CITY:	STATE:	ZIP:	COUNTY:
TELEPHONE:	OPERATOR CONTACT PERSON:		
FACILITY TYPE:			NAICS CODE:
HOURS PER DAY FACILITY ATTENDED:		TOTAL FACILITY CAPACITY:	
TYPE(S) OF OIL STORED:			
LOCATED IN INDIAN COUNTRY? ☐ YES ☑ NO RESERVATION NAME:			

INSPECTION INFORMATION		
INSPECTION DATE: 3/15/2012	TIME: 0900	ACTIVITY ID NO:
LEAD INSPECTOR: Mike Clonts		
OTHER INSPECTOR(S): Don Smith		

INSPECTOR ACKNOWLEDGMENT	
I performed an SPCC inspection at the facility specified above.	
INSPECTOR SIGNATURE:	DATE:

FACILITY RESPONSE PLAN (FRP) APPLICABILITY

A non-transportation related onshore facility is required to prepare and implement an FRP as outlined in 40 CFR 112.20 if:

- ☐ The facility transfers oil over water to or from vessels and has a total oil storage capacity greater than or equal to 42,000 U.S. gallons, **OR**
- ☑ The facility has a total oil storage capacity of at least 1 million U.S. gallons, **AND** at least one of the following is true:
  - ☐ The facility does not have secondary containment sufficiently large to contain the capacity of the largest aboveground tank plus sufficient freeboard for precipitation.
  - ☑ The facility is located at a distance such that a discharge could cause injury to fish and wildlife and sensitive environments.
  - ☐ The facility is located such that a discharge would shut down a public drinking water intake.
  - ☐ The facility has had a reportable discharge greater than or equal to 10,000 U.S. gallons in the past 5 years.

Facility has FRP: ☑ Yes ☐ No ☐ Not Required	FRP Number: FRP-06-TX-00625

Facility has a completed and signed copy of Appendix C, Attachment C-II, "Certification of the Applicability of the Substantial Harm Criteria." ☐ Yes ☐ No

Comments: 645,960,000 underground storage in salt domes...

SPCC GENERAL APPLICABILITY—40 CFR 112.1

IS THE FACILITY REGULATED UNDER 40 CFR part 112?

The completely buried oil storage capacity is over 42,000 U.S. gallons, **OR** the aggregate aboveground oil storage capacity is over 1,320 U.S. gallons **AND** ☑ Yes ☐ No

The facility is a non-transportation-related facility engaged in drilling, producing, gathering, storing, processing, refining, transferring, distributing, using, or consuming oil and oil products, which due to its location could reasonably be expected to discharge oil into or upon the navigable waters of the United States ☑ Yes ☐ No

AFFECTED WATERWAY(S): Smith Gully, Cedar Bayou, Gulf of Mexico	DISTANCE: ~ 300 feet

FLOW PATH TO WATERWAY: Topographic drainage from facility to Smith Gully, then to Cedar Bayou, then to the Gulf of Mexico.

Note: The following storage capacity is not considered in determining applicability of SPCC requirements:

- *Equipment subject to the authority of the U.S. Department of Transportation, U.S. Department of the Interior, or Minerals Management Service, as defined in Memoranda of Understanding dated November 24, 1971, and November 8, 1993; Tank trucks that return to an otherwise regulated facility that contain only residual amounts of oil (EPA Policy letter)*
- *Completely buried tanks subject to all the technical requirements of 40 CFR part 280 or a state program approved under 40 CFR part 281;*
- *Underground oil storage tanks deferred under 40 CFR part 280 that supply emergency diesel generators at a nuclear power generation facility licensed by the Nuclear Regulatory Commission (NRC) and subject to any NRC provision regarding design and quality criteria, including but not limited to CFR part 50;*
- *Any facility or part thereof used exclusively for wastewater treatment (production, recovery or recycling of oil is not considered wastewater treatment); (This does not include other oil containers located at a wastewater treatment facility, such as generator tanks or transformers)*
- *Containers smaller than 55 U.S. gallons;*
- *Permanently closed containers (as defined in §112.2);*
- *Motive power containers(as defined in §112.2);*
- *Hot-mix asphalt or any hot-mix asphalt containers;*
- *Heating oil containers used solely at a single-family residence;*
- *Pesticide application equipment and related mix containers;*
- *Any milk and milk product container and associated piping and appurtenances; and*
- *Intra-facility gathering lines subject to the regulatory requirements of 49 CFR part 192 or 195.*

Does the facility have an SPCC Plan? ☑ Yes ☐ No

SPCC TIER II QUALIFIED FACILITY APPLICABILITY—40 CFR 112.3(g)(2)	
The aggregate aboveground oil storage capacity is 10,000 U.S. gallons or less **AND**	☐ Yes ☑ No
In the three years prior to the SPCC Plan self-certification date, or since becoming subject to the rule (if the facility has been in operation for less than three years), the facility has **NOT** had:	
• A single discharge as described in §112.1(b) exceeding 1,000 U.S. gallons, **OR**	☐ Yes ☑ No
• Two discharges as described in §112.1(b) each exceeding 42 U.S. gallons within any twelve-month period[1]	☐ Yes ☑ No
IF ***YES*** TO ALL OF THE ABOVE, THEN THE FACILITY IS CONSIDERED A TIER II QUALIFIED FACILITY[2]	

REQUIREMENTS FOR PREPARATION AND IMPLEMENTATION OF A SPCC PLAN—40 CFR 112.3				
Date facility began operations:				
Date of initial SPCC Plan preparation:		Current Plan version (date/number):		
112.3(a)	**For facilities (except farms), including mobile or portable facilities:**			
	• In operation on or prior to November 10, 2011: Plan prepared and/or amended and fully implemented by **November 10, 2011**	☑ Yes ☐ No ☐ NA		
	• Beginning operations after November 10, 2011, Plan prepared and fully implemented before beginning operations	☐ Yes ☐ No ☑ NA		
	For farms (as defined in §112.2):			
	• In operation on or prior to August 16, 2002: Plan maintained, amended and implemented by **May 10, 2013**	☐ Yes ☐ No ☑ NA		
	• Beginning operations after August 16, 2002 through May 10, 2013: Plan prepared and fully implemented by **May 10, 2013**	☐ Yes ☐ No ☑ NA		
	• Beginning operations after May 10, 2013: Plan prepared and fully implemented before beginning operations	☐ Yes ☐ No ☑ NA		
112.3(d)	Plan is certified by a registered Professional Engineer (PE) and includes statements that the PE attests:	☐ Yes ☐ No ☐ NA		
	• PE is familiar with the requirements of 40 CFR part 112	☐ Yes ☐ No ☐ NA		
	• PE or agent has visited and examined the facility	☐ Yes ☐ No ☐ NA		
	• Plan is prepared in accordance with good engineering practice including consideration of applicable industry standards and the requirements of 40 CFR part 112	☐ Yes ☐ No ☐ NA		
	• Procedures for required inspections and testing have been established	☐ Yes ☐ No ☐ NA		
	• Plan is adequate for the facility	☐ Yes ☐ No ☐ NA		
PE Name:	License No.:	State:	Date of certification:	
112.3(e)(1)	Plan is available onsite if attended at least 4 hours per day. If facility is unattended, Plan is available at the nearest field office. *(Please note nearest field office contact information in comments section below.)*	☑ Yes ☐ No ☐ NA		
Comments:				

[1] Oil discharges that result from natural disasters, acts of war, or terrorism are not included in this determination. The gallon amount(s) specified (either 1,000 or 42) refers to the amount of oil that actually reaches navigable waters or adjoining shorelines not the total amount of oil spilled. The entire volume of the discharge is oil for this determination.

[2] An owner/operator who self-certifies a Tier II SPCC Plan may not include any environmentally equivalent alternatives or secondary containment impracticability determinations unless reviewed and certified by a PE.

AMENDMENT OF SPCC PLAN BY REGIONAL ADMINISTRATOR (RA)—40 CFR 112.4		
112.4(a),(c)	Has the facility discharged more than 1,000 U.S. gallons of oil in a single reportable discharge or more than 42 U.S. gallons in each of two reportable discharges in any 12-month period?[3]	☐Yes ☐No
If YES	• Was information submitted to the RA as required in §112.4(a)?[4]	☐Yes ☐No ☐NA
	• Was information submitted to the appropriate agency or agencies in charge of oil pollution control activities in the State in which the facility is located§112.4(c)	☐Yes ☐No ☐NA
	• Date(s) and volume(s) of reportable discharges(s) under this section: _____	
	• Were the discharges reported to the NRC[5]?	☐Yes ☐No
112.4(d),(e)	Have changes required by the RA been implemented in the Plan and/or facility?	☐Yes ☐No ☐NA
Comments:		

AMENDMENT OF SPCC PLAN BY THE OWNER OR OPERATOR—40 CFR 112.5		
112.5(a)	Has there been a change at the facility that materially affects the potential for a discharge described in §112.1(b)?	☐Yes ☐No
If YES	• Was the Plan amended within six months of the change?	☐Yes ☐No
112.5(b)	Review and evaluation of the Plan completed at least once every 5 years?	☐Yes ☐No ☐NA
	Following Plan review, was Plan amended within six months to include more effective prevention and control technology that has been field-proven to significantly reduce the likelihood of a discharge described in §112.1(b)?	☐Yes ☐No ☐NA
	Amendments implemented within six months of any Plan amendment?	☐Yes ☐No ☐NA
	Five year Plan review and evaluation documented?	☐Yes ☐No ☐NA
112.5(c)	Professional Engineer certification of any technical Plan amendments in accordance with all applicable requirements of §112.3(d) *[Except for self-certified Plans]*	☐Yes ☐No ☐NA

Name:	License No.:	State:	Date of certification:

Reason for amendment:	
Plan amended within six months of the change?	☐Yes ☐No ☐NA
Amendments implemented within six months of any Plan amendment?	☐Yes ☐No ☐NA
Comments:	

[3] A reportable discharge is a discharge as described in §112.1(b)(see 40 CFR part 110). The gallon amount(s) specified (either 1,000 or 42) refers to the amount of oil that actually reaches navigable waters or adjoining shorelines not the total amount of oil spilled. The entire volume of the discharge is oil for this determination

[4] Triggering this threshold may disqualify the facility from meeting the Qualified Facility criteria if it occurred in the three years prior to self certification

[5] Inspector Note-Confirm any spills identified above were reported to NRC

TIER II QUALIFIED FACILITY PLAN REQUIREMENTS —40 CFR 112.6(b)		
112.6(b)(1)	**Plan Certification:** Owner/operator certified in the Plan that:	☐ Yes ☐ No ☑ NA
(i)	He or she is familiar with the requirements of 40 CFR part 112	☐ Yes ☐ No ☑ NA
(ii)	He or she has visited and examined the facility[6]	☐ Yes ☐ No ☑ NA
(iii)	The Plan has been prepared in accordance with accepted and sound industry practices and standards and with the requirements of this part	☐ Yes ☐ No ☑ NA
(iv)	Procedures for required inspections and testing have been established	☐ Yes ☐ No ☑ NA
(v)	He or she will fully implement the Plan	☐ Yes ☐ No ☑ NA
(vi)	The facility meets the qualification criteria set forth under §112.3(g)(2)	☐ Yes ☐ No ☑ NA
(vii)	The Plan does not deviate from any requirements as allowed by §§112.7(a)(2) and 112.7(d), except as described under §112.6(b)(3)(i) or (ii)	☐ Yes ☐ No ☑ NA
(viii)	The Plan and individual(s) responsible for implementing the Plan have the full approval of management and the facility owner or operator has committed the necessary resources to fully implement the Plan.	☐ Yes ☐ No ☑ NA
112.6(b)(2)	**Technical Amendments:** The owner/operator self-certified the Plan's technical amendments for a change in facility design, construction, operation, or maintenance that affected potential for a §112.1(b) discharge	☐ Yes ☐ No ☑ NA
If YES	• Certification of technical amendments is in accordance with the self-certification provisions of §112.6(b)(1).	☐ Yes ☐ No ☑ NA
(i)	A PE certified a portion of the Plan (i.e., Plan is informally referred to as a hybrid Plan)	☐ Yes ☐ No ☑ NA
If YES	• The PE also certified technical amendments that affect the PE certified portion of the Plan as required under §112.6(b)(4)(ii)	☐ Yes ☐ No ☑ NA
(ii)	The aggregate aboveground oil storage capacity increased to more than 10,000 U.S. gallons as a result of the change	☐ Yes ☐ No ☑ NA
If YES	*The facility no longer meets the Tier II qualifying criteria in §112.3(g)(2) because it exceeds 10,000 U.S. gallons in aggregate aboveground storage capacity.*	
	The owner/operator prepared and implemented a Plan within 6 months following the change and had it certified by a PE under §112.3(d)	☐ Yes ☐ No ☑ NA
112.6(b)(3)	**Plan Deviations:** Does the Plan include environmentally equivalent alternative methods or impracticability determinations for secondary containment?	☐ Yes ☐ No ☑ NA
If YES	Identify the alternatives in the hybrid Plan:	
	• Environmental equivalent alternative method(s) allowed under §112.7(a)(2);	☐ Yes ☐ No ☑ NA
	• Impracticability determination under §112.7(d)	☐ Yes ☐ No ☑ NA
112.6(b)(4)	• For each environmentally equivalent measure, the Plan is accompanied by a written statement by the PE that describes: the reason for nonconformance, the alternative measure, and how it offers equivalent environmental protection in accordance with §112.7(a)(2);	☐ Yes ☐ No ☑ NA
	• For each secondary containment impracticability determination, the Plan explains the reason for the impracticability determination and provides the alternative measures to secondary containment required in §112.7(d)	☐ Yes ☐ No ☑ NA
	AND	
(i)	PE certifies in the Plan that:	
(A)	He/she is familiar with the requirements of 40 CFR Part 112	☐ Yes ☐ No ☑ NA
(B)	He/she or a representative agent has visited and examined the facility	☐ Yes ☐ No ☑ NA
(C)	The alternative method of environmental equivalence in accordance with §112.7(a)(2) or the determination of impracticability and alternative measures in accordance with §112.7(d) is consistent with good engineering practice, including consideration of applicable industry standards, and with the requirements of 40 CFR Part 112.	☐ Yes ☐ No ☑ NA
Comments:		

[6] Note that only the person certifying the Plan can make the site visit

GENERAL SPCC REQUIREMENTS—40 CFR 112.7		PLAN	FIELD
Management approval at a level of authority to commit the necessary resources to fully implement the Plan[7]		☐Yes ☐No	
Plan follows sequence of the rule or is an equivalent Plan meeting all applicable rule requirements and includes a cross-reference of provisions		☐Yes ☐No ☐NA	
If Plan calls for facilities, procedures, methods, or equipment not yet fully operational, details of their installation and start-up are discussed *(Note: Relevant for inspection evaluation and testing baselines.)*		☐Yes ☐No ☐NA	
112.7(a)(2)	The Plan includes deviations from the requirements of §§112.7(g), (h)(2) and (3), and (i) and applicable subparts B and C of the rule, except the secondary containment requirements in §§112.7(c) and (h)(1), 112.8(c)(2),112.8(c)(11), 112.12(c)(2), and 112.12(c)(11)	☐Yes ☐No ☐NA	
If **YES**	• The Plan states reasons for nonconformance	☐Yes ☐No ☐NA	
	• Alternative measures described in detail and provide equivalent environmental protection *(Note: Inspector should document if the environmental equivalence is implemented in the field, in accordance with the Plan's description)*	☐Yes ☐No ☐NA	☐Yes ☐No ☐NA
Describe each deviation and reasons for nonconformance:			
112.7(a)(3)	Plan describes physical layout of facility and includes a diagram[8] that identifies: • Location and contents of all regulated fixed oil storage containers • Storage areas where mobile or portable containers are located • Completely buried tanks otherwise exempt from the SPCC requirements (marked as "exempt") • Transfer stations • Connecting pipes, including intra-facility gathering lines that are otherwise exempt from the requirements of this part under §112.1(d)(11)	☐Yes ☐No	☐Yes ☐No
	Plan addresses each of the following:		
(i)	For each fixed container, type of oil and storage capacity (see Appendix A of this checklist). For mobile or portable containers, type of oil and storage capacity for each container or an estimate of the potential number of mobile or portable containers, the types of oil, and anticipated storage capacities	☐Yes ☐No	☐Yes ☐No
(ii)	Discharge prevention measures, including procedures for routine handling of products (loading, unloading, and facility transfers, etc.)	☐Yes ☐No	☐Yes ☐No
(iii)	Discharge or drainage controls, such as secondary containment around containers, and other structures, equipment, and procedures for the control of a discharge	☐Yes ☐No	☐Yes ☐No
(iv)	Countermeasures for discharge discovery, response, and cleanup (both facility's and contractor's resources)	☐Yes ☐No	☐Yes ☐No
(v)	Methods of disposal of recovered materials in accordance with applicable legal requirements	☐Yes ☐No	
(vi)	Contact list and phone numbers for the facility response coordinator, National Response Center, cleanup contractors with an agreement for response, and all Federal, State, and local agencies who must be contacted in the case of a discharge as described in §112.1(b)	☐Yes ☐No	

[7] May be part of the Plan or demonstrated elsewhere.
[8] Note in comments any discrepancies between the facility diagram, the description of the physical layout of facility, and what is observed in the field

		PLAN	FIELD
112.7(a)(4)	***Does not apply if the facility has submitted an FRP under §112.20:*** ☐Yes ☐No ☑NA Plan includes information and procedures that enable a person reporting an oil discharge as described in §112.1(b) to relate information on the: • Exact address or location and phone number of the facility; • Date and time of the discharge; • Type of material discharged; • Estimates of the total quantity discharged; • Estimates of the quantity discharged as descr bed in §112.1(b); • Source of the discharge; • Description of all affected media; • Cause of the discharge; • Damages or injuries caused by the discharge; • Actions being used to stop, remove, and mitigate the effects of the discharge; • Whether an evacuation may be needed; and • Names of individuals and/or organizations who have also been contacted.		
112.7(a)(5)	***Does not apply if the facility has submitted a FRP under §112.20:*** Plan organized so that portions describing procedures to be used when a discharge occurs will be readily usable in an emergency	☐Yes ☐No ☑NA	
112.7(b)	Plan includes a prediction of the direction, rate of flow, and total quantity of oil that could be discharged for each type of major equipment failure where experience indicates a reasonable potential for equipment failure	☐Yes ☐No ☐NA	
112.7(c)	Appropriate containment and/or diversionary structures or equipment are provided to prevent a discharge as described in §112.1(b), **except as provided in §112.7(k) of this section for certain qualified operational equipment**. The entire containment system, including walls and floors, are capable of containing oil and are constructed to prevent escape of a discharge from the containment system before cleanup occurs. The method, design, and capacity for secondary containment address the typical failure mode and the most likely quantity of oil that would be discharged. See Appendix A of this checklist. **For onshore facilities**, one of the following or its equivalent: • Dikes, berms, or retaining walls sufficiently impervious to contain oil; • Curbing or drip pans; • Sumps and collection systems; • Culverting, gutters or other drainage systems; • Weirs, booms or other barriers; • Spill diversion pond; • Retention ponds; or • Sorbent materials.		
	Identify which of the following are present at the facility and if appropriate containment and/or diversionary structures or equipment are provided as described above:		
	☐ Bulk storage containers	☐Yes ☐No ☐NA	☐Yes ☐No ☐NA
	☐ Mobile/portable containers	☐Yes ☐No ☐NA	☐Yes ☐No ☐NA
	☐ Oil-filled operational equipment (as defined in 112.2)	☐Yes ☐No ☐NA	☐Yes ☐No ☐NA
	☐ Other oil-filled equipment (i.e., manufacturing equipment)	☐Yes ☐No ☐NA	☐Yes ☐No ☐NA
	☐ Piping and related appurtenances	☐Yes ☐No ☐NA	☐Yes ☐No ☐NA
	☐ Mobile refuelers or non-transportation-related tank cars	☐Yes ☐No ☐NA	☐Yes ☐No ☐NA
	☐ Transfer areas, equipment and activities	☐Yes ☐No ☐NA	☐Yes ☐No ☐NA
	☐ Identify any other equipment or activities that are not listed above: _____	☐Yes ☐No ☐NA	☐Yes ☐No ☐NA

Comments:

		PLAN	FIELD
112.7(d)	Secondary containment for one (or more) of the following provisions is determined to be impracticable: ☐ General secondary containment §112.7(c) ☐ Bulk storage containers §§112.8(c)(2)/112.12(c)(2) ☐ Loading/unloading rack §112.7(h)(1) ☐ Mobile/portable containers§§112.8(c)(11)/112.12(c)(11)	☐Yes ☑No	
If **YES**	• The impracticability of secondary containment is clearly demonstrated and described in the Plan	☐Yes ☐No ☑NA	☐Yes ☐No ☑NA
	• For bulk storage containers,[9] periodic integrity testing of containers and integrity and leak testing of the associated valves and piping is conducted	☐Yes ☐No ☑NA	☐Yes ☐No ☑NA
	(Does not apply if the facility has submitted a FRP under §112.20):		
	• Contingency Plan following the provisions of 40 CFR part 109 is provided (see Appendix C of this checklist) **AND**	☐Yes ☐No ☑NA	
	• Written commitment of manpower, equipment, and materials required to expeditiously control and remove any quantity of oil discharged that may be harmful	☐Yes ☐No ☑NA	☐Yes ☐No ☑NA
112.7(e)	Inspections and tests conducted in accordance with written procedures	☐Yes ☐No	☐Yes ☐No
	Record of inspections or tests signed by supervisor or inspector	☐Yes ☐No	☐Yes ☐No
	Kept with Plan for at least 3 years (see Appendix B of this checklist)[10]	☐Yes ☐No	☐Yes ☐No
112.7(f)	Personnel, training, and oil discharge prevention procedures		
(1)	Training of oil-handling personnel in operation and maintenance of equipment to prevent discharges; discharge procedure protocols; applicable pollution control laws, rules, and regulations; general facility operations; and contents of SPCC Plan	☐Yes ☐No ☐NA	☐Yes ☐No ☐NA
(2)	Person designated as accountable for discharge prevention at the facility and reports to facility management	☐Yes ☐No ☐NA	☐Yes ☐No ☐NA
(3)	Discharge prevention briefings conducted at least once a year for oil handling personnel to assure adequate understanding of the Plan. Briefings highlight and describe known discharges as described in §112.1(b) or failures, malfunctioning components, and any recently developed precautionary measures	☐Yes ☐No ☐NA	☐Yes ☐No ☐NA
112.7(g)	Plan describes how to: • Secure and control access to the oil handling, processing and storage areas; • Secure master flow and drain valves; • Prevent unauthorized access to starter controls on oil pumps; • Secure out-of-service and loading/unloading connections of oil pipelines; and • Address the appropriateness of security lighting to both prevent acts of vandalism and assist in the discovery of oil discharges.	☐Yes ☐No ☐NA	☐Yes ☐No ☐NA
Comments:			

[9] These additional requirements apply only to bulk storage containers, when an impracticability determination has been made by the PE
[10] Records of inspections and tests kept under usual and customary business practices will suffice

		PLAN	FIELD
112.7(h)	Tank car and tank truck loading/unloading rack[11] is present at the facility ☐Yes ☐No *Loading/unloading rack* means a fixed structure (such as a platform, gangway) necessary for loading or unloading a tank truck or tank car, which is located at a facility subject to the requirements of this part. A loading/unloading rack includes a loading or unloading arm, and may include any combination of the following: piping assemblages, valves, pumps, shut-off devices, overfill sensors, or personnel safety devices.		
If **YES** (1)	Does loading/unloading rack drainage flow to catchment basin or treatment facility designed to handle discharges or use a quick drainage system?	☐Yes ☐No ☐NA	☐Yes ☐No ☐NA
	Containment system holds at least the maximum capacity of the largest single compartment of a tank car/truck loaded/unloaded at the facility	☐Yes ☐No ☐NA	☐Yes ☐No ☐NA
(2)	An interlocked warning light or physical barriers, warning signs, wheel chocks, or vehicle brake interlock system in the area adjacent to the **loading or unloading rack** to prevent vehicles from departing before complete disconnection of flexible or fixed oil transfer lines	☐Yes ☐No ☐NA	☐Yes ☐No ☐NA
(3)	Lower-most drains and all outlets on tank cars/trucks inspected prior to filling/departure, and, if necessary ensure that they are tightened, adjusted, or replaced to prevent liquid discharge while in transit	☐Yes ☐No ☐NA	☐Yes ☐No ☐NA
112.7(i)	Brittle fracture evaluation of field-constructed aboveground containers is conducted after tank repair, alteration, reconstruction, or change in service that might affect the risk of a discharge or after a discharge/failure due to brittle fracture or other catastrophe, and appropriate action taken as necessary (applies to only field-constructed aboveground containers)	☐Yes ☐No ☐NA	☐Yes ☐No ☐NA
112.7(j)	Discussion of conformance with applicable more stringent State rules, regulations, and guidelines and other effective discharge prevention and containment procedures listed in 40 CFR part 112	☐Yes ☐No ☐NA	
112.7(k)	Qualified oil-filled operational equipment is present at the facility[12] ☐Yes ☐No *Oil-filled operational equipment* means equipment that includes an oil storage container (or multiple containers) in which the oil is present solely to support the function of the apparatus or the device. Oil-filled operational equipment is not considered a bulk storage container, and does not include oil-filled manufacturing equipment (flow-through process). Examples of oil-filled operational equipment include, but are not limited to, hydraulic systems, lubricating systems (e.g. , those for pumps, compressors and other rotating equipment, including pumpjack lubrication systems), gear boxes, machining coolant systems, heat transfer systems, transformers, circuit breakers, electrical switches, and other systems containing oil solely to enable the operation of the device.		
If **YES**	Check which apply: ☐ Secondary Containment provided in accordance with 112.7(c) ☐ Alternative measure described below (confirm eligibility)		
112.7(k)	Qualified Oil-Filled Operational Equipment • Has a single reportable discharge as described in §112.1(b) from any oil-filled operational equipment exceeding 1,000 U.S. gallons occurred within the three years prior to Plan certification date? ☐Yes ☐No ☐NA • Have two reportable discharges as described in §112.1(b) from any oil-filled operational equipment each exceeding 42 U.S. gallons occurred within any 12-month period within the three years prior to Plan certification date?[13] ☐Yes ☐No ☐NA		
	*If **YES** for either, secondary containment in accordance with §112.7(c) is required*		
	• Facility procedure for inspections or monitoring program to detect equipment failure and/or a discharge is established and documented	☐Yes ☐No ☐NA	☐Yes ☐No ☐NA
	Does not apply if the facility has submitted a FRP under §112.20: • Contingency plan following 40 CFR part 109 (see Appendix C checklist) is provided in Plan **AND**	☐Yes ☐No ☐NA	
	• Written commitment of manpower, equipment, and materials required to expeditiously control and remove any quantity of oil discharged that may be harmful is provided in Plan	☐Yes ☐No ☐NA	

[11] Note that a tank car/truck loading/unloading rack must be present for §112.7(h) to apply

[12] This provision does not apply to oil-filled manufacturing equipment (flow-through process)

[13] Do not include oil discharges that result from natural disasters, acts of war, or terrorism in this qualification determination

ONSHORE FACILITIES (EXCLUDING PRODUCTION) 40 CFR 112.8/112.12		PLAN	FIELD
112.8(b)/ 112.12(b) Facility Drainage			
Diked Areas (1)	Drainage from diked storage areas is: • Restrained by valves, except where facility systems are designed to control such discharge, **OR** • Manually activated pumps or ejectors are used and the condition of the accumulation is inspected prior to draining dike to ensure no oil will be discharged	☐Yes ☐No ☐NA	☐Yes ☐No ☐NA
(2)	Diked storage area drain valves are manual, open-and-closed design (not flapper-type drain valves)	☐Yes ☐No ☐NA	☐Yes ☐No ☐NA
	If drainage is released directly to a watercourse and not into an onsite wastewater treatment plant, retained storm water is inspected and discharged per §§112.8(c)(3)(ii), (iii), and (iv) or §§112.12(c)(3)(ii), (iii), and (iv).	☐Yes ☐No ☐NA	☐Yes ☐No ☐NA
Undiked Areas (3)	Drainage from undiked areas with a potential for discharge designed to flow into ponds, lagoons, or catchment basins to retain oil or return it to facility. Catchment basin located away from flood areas.[14]	☐Yes ☐No ☐NA	☐Yes ☐No ☐NA
(4)	If facility drainage not engineered as in (b)(3) (i.e., drainage flows into ponds, lagoons, or catchment basins) then the facility is equipped with a diversion system to retain oil in the facility in the event of an uncontrolled discharge.[15]	☐Yes ☐No ☐NA	☐Yes ☐No ☐NA
(5)	Are facility drainage waters continuously treated in more than one treatment unit and pump transfer is needed?	☐Yes ☐No ☐NA	☐Yes ☐No ☐NA
If ***YES***	• Two "lift" pumps available and at least one permanently installed	☐Yes ☐No ☐NA	☐Yes ☐No ☐NA
	• Facility drainage systems engineered to prevent a discharge as described in §112.1(b) in the case of equipment failure or human error	☐Yes ☐No ☐NA	☐Yes ☐No ☐NA
Comments:			
112.8(c)/112.12(c) Bulk Storage Containers ☐NA *Bulk storage container* means any container used to store oil. These containers are used for purposes including, but not limited to, the storage of oil prior to use, while being used, or prior to further distribution in commerce. Oil-filled electrical, operating, or manufacturing equipment is not a bulk storage container. *If bulk storage containers are not present, mark this section Not Applicable (NA). If present, complete this section and Appendix A of this checklist.*			
(1)	Containers materials and construction are compatible with material stored and conditions of storage such as pressure and temperature	☐Yes ☐No ☐NA	☐Yes ☐No ☐NA
(2)	Except for mobile refuelers and other non-transportation-related tank trucks, construct all bulk storage tank installations with secondary containment to hold capacity of largest container and sufficient freeboard for precipitation	☐Yes ☐No ☐NA	☐Yes ☐No ☐NA
	Diked areas sufficiently impervious to contain discharged oil **OR**	☐Yes ☐No ☐NA	☐Yes ☐No ☐NA
	Alternatively, any discharge to a drainage trench system will be safely confined in a facility catchment basin or holding pond	☐Yes ☐No ☐NA	☐Yes ☐No ☐NA

[14] Do not include oil discharges that result from natural disasters, acts of war, or terrorism in this qualification determination.
[15] These provisions apply only when a facility drainage system is used for containment; otherwise mark NA

		PLAN	FIELD
(3)	Is there drainage of uncontaminated rainwater from diked areas into a storm drain or open watercourse?	☐Yes ☐No ☐NA	☐Yes ☐No ☐NA
If **YES**	• Bypass valve normally sealed closed	☐Yes ☐No ☐NA	☐Yes ☐No ☐NA
	• Retained rainwater is inspected to ensure that its presence will not cause a discharge as described in §112.1(b)	☐Yes ☐No ☐NA	☐Yes ☐No ☐NA
	• Bypass valve opened and resealed under responsible supervision	☐Yes ☐No ☐NA	☐Yes ☐No ☐NA
	• Adequate records of drainage are kept; for example, records required under permits issued in accordance with 40 CFR §§122.41(j)(2) and (m)(3)	☐Yes ☐No ☐NA	☐Yes ☐No ☐NA
(4)	For completely buried metallic tanks installed on or after January 10, 1974 (if not exempt from SPCC regulation because subject to all of the technical requirements of 40 CFR part 280 or 281):		
	• Provide corrosion protection with coatings or cathodic protection compatible with local soil conditions	☐Yes ☐No ☐NA	☐Yes ☐No ☐NA
	• Regular leak testing conducted	☐Yes ☐No ☐NA	☐Yes ☐No ☐NA
(5)	The buried section of partially buried or bunkered metallic tanks protected from corrosion with coatings or cathodic protection compatible with local soil conditions	☐Yes ☐No ☐NA	☐Yes ☐No ☐NA
(6)	• Test or inspect each aboveground container for integrity on a regular schedule and whenever you make material repairs. Techniques include, but are not limited to: visual inspection, hydrostatic testing, radiographic testing, ultrasonic testing, acoustic emissions testing, or other system of non-destructive testing	☐Yes ☐No ☐NA	☐Yes ☐No ☐NA
	• Appropriate qualifications for personnel performing tests and inspections are identified in the Plan and have been assessed in accordance with industry standards	☐Yes ☐No ☐NA	☐Yes ☐No ☐NA
	• The frequency and type of testing and inspections are documented, are in accordance with industry standards and take into account the container size, configuration and design	☐Yes ☐No ☐NA	☐Yes ☐No ☐NA
	• Comparison records of aboveground container integrity testing are maintained	☐Yes ☐No ☐NA	☐Yes ☐No ☐NA
	• Container supports and foundations regularly inspected	☐Yes ☐No ☐NA	☐Yes ☐No ☐NA
	• Outside of containers frequently inspected for signs of deterioration, discharges, or accumulation of oil inside diked areas	☐Yes ☐No ☐NA	☐Yes ☐No ☐NA
	• Records of all inspections and tests maintained[16]	☐Yes ☐No ☐NA	☐Yes ☐No ☐NA
Integrity Testing Standard identified in the Plan:			
112.12 (c)(6)(ii) *(Applies to AFVO Facilities only)*	Conduct formal visual inspection on a regular schedule for bulk storage containers that meet all of the following conditions: • Subject to 21 CFR part 110; • Elevated; • Constructed of austenitic stainless steel; • Have no external insulation; and • Shop-fabricated.	☐Yes ☐No ☐NA	☐Yes ☐No ☐NA
	In addition, you must frequently inspect the outside of the container for signs of deterioration, discharges, or accumulation of oil inside diked areas.	☐Yes ☐No ☐NA	☐Yes ☐No ☐NA
	You must determine and document in the Plan the appropriate qualifications for personnel performing tests and inspections.[16]	☐Yes ☐No ☐NA	☐Yes ☐No ☐NA

[16] Records of inspections and tests kept under usual and customary business practices will suffice

		PLAN	FIELD
(7)	Leakage through defective internal heating coils controlled: • Steam returns and exhaust lines from internal heating coils that discharge into an open watercourse are monitored for contamination, **OR** • Steam returns and exhaust lines pass through a settling tank, skimmer, or other separation or retention system	☐Yes ☐No ☐NA ☐Yes ☐No ☐NA	☐Yes ☐No ☐NA ☐Yes ☐No ☐NA
(8)	Each container is equipped with at least one of the following for liquid level sensing: • High liquid level alarms with an audible or visual signal at a constantly attended operation or surveillance station, or audible air vent in smaller facilities; • High liquid level pump cutoff devices set to stop flow at a predetermined container content level; • Direct audible or code signal communication between container gauger and pumping station; or • Fast response system for determining liquid level (such as digital computers, telepulse, or direct vision gauges) and a person present to monitor gauges and overall filling of bulk containers. ☐ Liquid level **sensing devices regularly tested to ensure** proper operation *(check if liquid level sensing devices are present at the facility and the Plan addresses testing)*	☐Yes ☐No ☐NA	☐Yes ☐No ☐NA
(9)	Effluent treatment facilities observed frequently enough to detect possible system upsets that could cause a discharge as described in §112.1(b)	☐Yes ☐No ☐NA	☐Yes ☐No ☐NA
(10)	Visible discharges which result in a loss of oil from the container, including but not limited to seams, gaskets, piping, pumps, valves, rivets, and bolts are promptly corrected and oil in diked areas is promptly removed	☐Yes ☐No ☐NA	☐Yes ☐No ☐NA
(11)	Mobile or portable containers positioned to prevent a discharge as described in §112.1(b). Mobile or portable containers (excluding mobile refuelers and other non-transportation-related tank trucks) have secondary containment with sufficient capacity to contain the largest single compartment or container and sufficient freeboard to contain precipitation	☐Yes ☐No ☐NA ☐Yes ☐No ☐NA	☐Yes ☐No ☐NA ☐Yes ☐No ☐NA
112.8(d)/112.12(d)Facility transfer operations, pumping, and facility process			
(1)	Buried piping installed or replaced on or after August 16, 2002 has protective wrapping or coating Buried piping installed or replaced on or after August 16, 2002 is also cathodically protected or otherwise satisfies corrosion protection standards for piping in 40 CFR part 280 or 281 Buried piping exposed for any reason is inspected for deterioration; corrosion damage is examined; and corrective action is taken	☐Yes ☐No ☐NA ☐Yes ☐No ☐NA ☐Yes ☐No ☐NA	☐Yes ☐No ☐NA ☐Yes ☐No ☐NA ☐Yes ☐No ☐NA
(2)	Piping terminal connection at the transfer point is marked as to origin and capped or blank-flanged when not in service or in standby service for an extended time	☐Yes ☐No ☐NA	☐Yes ☐No ☐NA
(3)	Pipe supports are properly designed to minimize abrasion and corrosion and allow for expansion and contraction	☐Yes ☐No ☐NA	☐Yes ☐No ☐NA
(4)	Aboveground valves, piping, and appurtenances such as flange joints, expansion joints, valve glands and bodies, catch pans, pipeline supports, locking of valves, and metal surfaces are inspected regularly to assess their general condition Integrity and leak testing conducted on buried piping at time of installation, modification, construction, relocation, or replacement	☐Yes ☐No ☐NA ☐Yes ☐No ☐NA	☐Yes ☐No ☐NA ☐Yes ☐No ☐NA
(5)	Vehicles warned so that no vehicle endangers aboveground piping and other oil transfer operations	☐Yes ☐No ☐NA	☐Yes ☐No ☐NA
Comments:			

ADDITIONAL COMMENTS	
Provision	**Comment**

PHOTO DOCUMENTATION LOG		
Photo#	**Photographer Name**	**Description (include date, location and direction)**

APPENDIX A: SPCC FIELD INSPECTION AND PLAN REVIEW TABLE

Documentation of Field Observations for Containers and Associated Requirements

Inspectors should use this table to document observations of containers as needed.

Containers and Piping

Check containers for leaks, specifically looking for: drip marks, discoloration of tanks, puddles containing spilled or leaked material, corrosion, cracks, and localized dead vegetation, and standards/specifications of construction.

Check aboveground container foundation for: cracks, discoloration, and puddles containing spilled or leaked material, settling, gaps between container and foundation, and damage caused by vegetation roots.

Check all piping for: droplets of stored material, discoloration, corrosion, bowing of pipe between supports, evidence of stored material seepage from valves or seals, evidence of leaks, and localized dead vegetation. For all aboveground piping, include the general condition of flange joints, valve glands and bodies, drip pans, pipe supports, bleeder and gauge valves, and other such items (Document in comments section of §112.8(d) or 112.12(d).)

Secondary Containment (Active and Passive)

Check secondary containment for: containment system (including walls and floor) ability to contain oil such that oil will not escape the containment system before cleanup occurs, proper sizing, cracks, discoloration, presence of spilled or leaked material (standing liquid), erosion, corrosion, penetrations in the containment system, and valve conditions.

Check dike or berm systems for: level of precipitation in dike/available capacity, operational status of drainage valves (closed), dike or berm impermeability, debris, erosion, impermeability of the earthen floor/walls of diked area, and location/status of pipes, inlets, drainage around and beneath containers, presence of oil discharges within diked areas.

Check drainage systems for: an accumulation of oil that may have resulted from any small discharge, including field drainage systems (such as drainage ditches or road ditches), and oil traps, sumps, or skimmers. Ensure any accumulations of oil have been promptly removed.

Check retention and drainage ponds for: erosion, available capacity, presence of spilled or leaked material, debris, and stressed vegetation.

Check active measures (countermeasures) for: amount indicated in plan is available and appropriate; deployment procedures are realistic; material is located so that they are readily available; efficacy of discharge detection; availability of personnel and training, appropriateness of measures to prevent a discharge as described in §112.1(b).

Container ID/ General Condition[17] Aboveground or Buried Tank	Storage Capacity and Type of Oil	Type of Containment/ Drainage Control	Overfill Protection and Testing & Inspections

[17] Identify each tank with either an A to indicate aboveground or B for completely buried

APPENDIX B: SPCC INSPECTION AND TESTING CHECKLIST

Required Documentation of Tests and Inspections

Records of inspections and tests required by 40 CFR part 112 signed by the appropriate supervisor or inspector must be kept by all facilities with the SPCC Plan for a period of three years. Records of inspections and tests conducted under usual and customary business practices will suffice. Documentation of the following inspections and tests should be kept with the SPCC Plan.

	Inspection or Test	Documentation		Not Applicable
		Present	Not Present	
112.7–General SPCC Requirements				
(d)	Integrity testing for bulk storage containers with no secondary containment system and for which an impracticability determination has been made	☐	☐	☐
(d)	Integrity and leak testing of valves and piping associated with bulk storage containers with no secondary containment system and for which an impracticability determination has been made	☐	☐	☐
(h)(3)	Inspection of lowermost drain and all outlets of tank car or tank truck prior to filling and departure from loading/unloading rack	☐	☐	☐
(i)	Evaluation of field-constructed aboveground containers for potential for brittle fracture or other catastrophic failure when the container undergoes a repair, alteration, reconstruction or change in service or has discharged oil or failed due to brittle fracture failure or other catastrophe	☐	☐	☐
k(2)(i)	Inspection or monitoring of qualified oil-filled operational equipment when the equipment meets the qualification criteria in §112.7(k)(1) and facility chooses to implement the alternative requirements in §112.7(k)(2) that include an inspection or monitoring program to detect oil-filled operational equipment failure and discharges	☐	☐	☐
112.8/112.12–Onshore Facilities (excluding oil production facilities)				
(b)(1), (b)(2)	Inspection of storm water released from diked areas into facility drainage directly to a watercourse	☐	☐	☐
(c)(3)	Inspection of rainwater released directly from diked containment areas to a storm drain or open watercourse before release, open and release bypass valve under supervision, and records of drainage events	☐	☐	☐
(c)(4)	Regular leak testing of completely buried metallic storage tanks installed on or after January 10, 1974 and regulated under 40 CFR 112	☐	☐	☐
(c)(6)	Regular integrity testing of aboveground containers and integrity testing after material repairs, including comparison records	☐	☐	☐
(c)(6), (c)(10)	Regular visual inspections of the outsides of aboveground containers, supports and foundations	☐	☐	☐
(c)(6)	Frequent inspections of diked areas for accumulations of oil	☐	☐	☐
(c)(8)(v)	Regular testing of liquid level sensing devices to ensure proper operation	☐	☐	☐
(c)(9)	Frequent observations of effluent treatment facilities to detect possible system upsets that could cause a discharge as described in §112.1(b)	☐	☐	☐
(d)(1)	Inspection of buried piping for damage when piping is exposed and additional examination of corrosion damage and corrective action, if present	☐	☐	☐
(d)(4)	Regular inspections of aboveground valves, piping and appurtenances and assessments of the general condition of flange joints, expansion joints, valve glands and bodies, catch pans, pipeline supports, locking of valves, and metal surfaces	☐	☐	☐
(d)(4)	Integrity and leak testing of buried piping at time of installation, modification, construction, relocation or replacement	☐	☐	☐

APPENDIX C: SPCC CONTINGENCY PLAN REVIEW CHECKLIST

40 CFR Part 109–Criteria for State, Local and Regional Oil Removal Contingency Plans

If a facility makes an impracticability determination for secondary containment in accordance with §112.7(d), it is required to provide an oil spill contingency plan following 40 CFR part 109, unless the facility has submitted a FRP under §112.20. An oil spill contingency plan may also be developed, unless the facility has submitted a FRP under §112.20 as one of the required alternatives to general secondary containment for qualified oil filled operational equipment in accordance with §112.7(k).

	109.5–Development and implementation criteria for State, local and regional oil removal contingency plans[18]	**Yes**	**No**
(a)	Definition of the authorities, responsibilities and duties of all persons, organizations or agencies which are to be involved in planning or directing oil removal operations.	☐	☐
(b)	Establishment of notification procedures for the purpose of early detection and timely notification of an oil discharge including:	☐	☐
(1)	The identification of critical water use areas to facilitate the reporting of and response to oil discharges.	☐	☐
(2)	A current list of names, telephone numbers and addresses of the responsible persons (with alternates) and organizations to be notified when an oil discharge is discovered.	☐	☐
(3)	Provisions for access to a reliable communications system for timely notification of an oil discharge, and the capability of interconnection with the communications systems established under related oil removal contingency plans, particularly State and National plans (e.g., National Contingency Plan (NCP)).	☐	☐
(4)	An established, prearranged procedure for requesting assistance during a major disaster or when the situation exceeds the response capability of the State, local or regional authority.	☐	☐
(c)	Provisions to assure that full resource capability is known and can be committed during an oil discharge situation including:	☐	☐
(1)	The identification and inventory of applicable equipment, materials and supplies which are available locally and regionally.	☐	☐
(2)	An estimate of the equipment, materials and supplies that would be required to remove the maximum oil discharge to be anticipated.	☐	☐
(3)	Development of agreements and arrangements in advance of an oil discharge for the acquisition of equipment, materials and supplies to be used in responding to such a discharge.	☐	☐
(d)	Provisions for well defined and specific actions to be taken after discovery and notification of an oil discharge including:	☐	☐
(1)	Specification of an oil discharge response operating team consisting of trained, prepared and available operating personnel.	☐	☐
(2)	Pre-designation of a properly qualified oil discharge response coordinator who is charged with the responsibility and delegated commensurate authority for directing and coordinating response operations and who knows how to request assistance from Federal authorities operating under existing national and regional contingency plans.	☐	☐
(3)	A preplanned location for an oil discharge response operations center and a reliable communications system for directing the coordinated overall response operations.	☐	☐
(4)	Provisions for varying degrees of response effort depending on the severity of the oil discharge.	☐	☐
(5)	Specification of the order of priority in which the various water uses are to be protected where more than one water use may be adversely affected as a result of an oil discharge and where response operations may not be adequate to protect all uses.	☐	☐
(e)	Specific and well defined procedures to facilitate recovery of damages and enforcement measures as provided for by State and local statutes and ordinances.	☐	☐

[18] The contingency plan should be consistent with all applicable state and local plans, Area Contingency Plans, and the NCP.

TARGET SHEET

SITE NAME: ENTERPRISE PRODUCTS PARTNERS LP

CERCLIS I.D.: NONSITESPECI

TITLE OF DOC.: ENTERPRISE MONT BELVIEU FIRE VIDEO

DATE OF DOC.: 02/08/2011

NO. OF PGS. THIS TARGET SHEET REPLACES: N/A

SDMS #: 9526478 **RELATED #:** N/A

CONFIDENTIAL ?		**MISSING PAGES ?**	
ALTERN. MEDIA ?	x	**CROSS REFERENCE ?**	

LAB DOCUMENT ?		**LAB NAME:**	
ASC./BOX #:			
CASE #:		**SDG #:**	

COMMENTS : THIS ATTACHMENT IS A VIDEO/AUDIO CLIP