948557

TETRA TECH

March 29, 2017

Mr. Steve Wolfe
Federal On-Scene Coordinator
U.S. Environmental Protection Agency Region 5
25063 Center Ridge Road
Westlake, Ohio, 44145

Subject: Triple J Towing Site Draft Sampling and Analysis Plan
2115 Hayes Avenue, Fremont, Sandusky County, Ohio
EPA Contract No. EP-S5-13-01 (START IV, Region 5)
EPA TDD No. S05-0001-1702-003
Document Tracking No. 1503A

Dear Mr. Wolfe:

The Tetra Tech, EMI Inc. (Tetra Tech) Superfund Technical Assessment and Response Team (START) is submitting the draft Sampling and Analysis Plan (SAP) for the Triple J Towing (TJT) site in Fremont, Ohio for review and approval. The SAP summarizes the drum/container and soil sampling event that will occur -on a date to be determined based on access and weather conditions. Attachments include tables summarizing the number of proposed samples and bottleware, figures illustrating the site location (**Attachment 1**), and Tetra Tech Standard Operating Procedures (SOP) (**Attachment 2**) relevant to this removal assessment. The proposed technical approach has been prepared in accordance with the U.S. Environmental Protection Agency (EPA) Performance Work Statement for the subject contract.

If you have any questions or comments regarding this report, please contact me at 440-781-7944.

Respectfully,

Brian Malone
START IV, Region 5 Project Manager

Enclosures

cc: Kevin Scott, Tetra Tech Program Manager
TDD file

DRAFT ABBREVIATED SAMPLING AND ANALYSIS PLAN

TRIPLE J TOWING SITE

TDD#:	S05-0001-1702-003
EPA OSC:	Steve Wolfe
SITE NAME:	Triple J Towing Site
SITE LOCATION:	2115 Hayes Avenue, Fremont, Ohio
SAMPLING ACTIVITIES:	Drum/container sampling, surface soil sampling
SAMPLING DATES:	TBD
SAP PREPARER:	Don Newton
SIGNATURE/DATE:	Don Newton 3/27/2017
QC REVIEWER:	Edward R. Schuessler
SIGNATURE/DATE:	Edward R. Schuessler 3/27/2017
USEPA OSC APPROVAL SIGNATURE/DATE:	
Document Tracking Number (DTN)	1503A

INTRODUCTION:

This abbreviated Sampling and Analysis Plan (SAP) identifies the sampling methods, equipment, and quality assurance/quality control (QA/QC) measures specific to the Triple J Towing (site) removal assessment. The SAP follows the procedures described in the Tetra Tech, Inc. (Tetra Tech) Superfund Technical Assessment and Response Team (START) IV Quality Assurance Project Plan (QAPP) (Tetra Tech 2016).

SCOPE OF WORK:

Under Technical Direction Document (TDD) S05-0001-1702-003, the U.S. Environmental Protection Agency (EPA) Region 5 tasked Tetra Tech START to assist with drum/container sampling and soil sampling activities at the site. The site is located at 2115 Hayes Avenue in Fremont, Sandusky County, Ohio. The removal assessment tasks are designed to document the potential for imminent and substantial threats to the public health or welfare of the United States or the environment. The objective of the sampling activities is to characterize select waste materials at the site and determine if the material is Toxic Substances Control Act (TSCA) polychlorinated biphenyl (PCB)-containing waste. As directed by EPA, waste samples collected at the site will be analyzed for polychlorinated biphenyls (PCBs). Tetra Tech will also conduct field screening activities. Specifically, START and EPA will perform the following activities during the removal assessment:

- Collect up to 75 liquid/oil or solid waste samples from 55-gallon drums throughout the site. Samples will be analyzed for PCBs via SW-846 Method 8082A. Duplicate samples and matrix spike /matrix spike duplicate (MS/MSD) samples will also be collected for quality assurance/quality control (QA/QC) purposes. A duplicate sample will be collected for every 10 samples collected and one MS/MSD sample for every 20 samples collected.

- Collect up to 5 soil samples from stained ground surface areas that may have been former drum storage areas. Samples will be analyzed for PCBs via SW-846 Method 8082A. Document all activities, including data and field measurements, in a field logbook, on field data sheets, container inventory logs, or with photographs in accordance with Tetra Tech SOP No. 024 "Recording Notes in Field Logbooks."
- Samples may be field screened by utilizing a Clor-n-Soil® or Clor-n-Oil® PCB screening test kit to determine the range of PCBs (above or below 20 to 50 ppm PCBs). Beilstein tests may be conducted in-lieu of Clor-n-Oil® tests to determine presence or absence of halides in oil. Type and frequency of tests will be conducted at the discretion of the OSC.
- Submit a trip report that summarizes all field activities and validated analytical results. The report will include validated analytical data compared to TSCA PCB-containing waste criteria. The report will also include site field notes, container identification and location, soil sampling locations, site photographs and site figures depicting sampling locations.

PROJECT TEAM:

The personnel listed in the table below will be involved in planning and technical activities for the site. The EPA project personnel and each field team member will receive a copy of the SAP, and a copy will be retained in the site file.

Personnel	Title	Organization	Phone Number	Email
Steve Wolfe	OSC	EPA Region 5	440-250-1718	wolfe.stephen@epa.gov
Kevin Scott	Program Manager	START	312-201-7739	kevin.scott@tetratech.com
Chris Draper	H&S Manager	START	615-969-1334	chris.draper@tetratech.com
Brian Malone	Project Manager	START	440-781-7944	brian.malone@tetratech.com
Don Newton	Field Team Leader	START	419-262-0108	don.newton@tetratech.com

Notes:
EPA = U.S. Environmental Protection Agency
OSC = On-Scene Coordinator
START = Superfund Technical Assessment and Response Team

SITE LOCATION:

The site is located at 2115 Hayes Avenue in Fremont, Sandusky County, Ohio. **Figure 1** in **Attachment A** illustrates the location of the site on the U.S. Geological Survey (USGS) 7.5-Minute Topographic Quadrangle for Sandusky County, Ohio (USGS 1994). The geographic coordinates at the center of the site are 41°20'27.92" North latitude and 83°8'23.12" West longitude.

SITE DESCRIPTION:

The site covers approximately five (5) acres and is bound to the north by Hayes Avenue (State Route 6); to the east by Techniform Industries; to the south by railroad tracks with a wooded residential area beyond; and to the west by commercial/industrial property. Topography across the site slopes gently to the west and the elevation is approximately 640 feet above mean sea level.

SITE HISTORY:

An unannounced Focused Compliance Inspection ("FCI") of TJT took place on October 31, 2016, and November 1, 2016. The FCI was conducted by the Ohio Environmental Protection Agency ("OEPA") as a follow-up evaluation of the facility's compliance with certain provisions of the Resource Conservation and Recovery Act ("RCRA") and its implementing regulations found in the Ohio Administrative Code. The purpose of the RCRA focused inspection was to follow-up on an analytical report submitted to OEPA, indicating the presence of PCB containing waste and lead contaminated hazardous waste (D009). Analytical results indicated a composite soil sample of onsite drums resulted in PCB concentrations above 50 ppm and high levels of lead. OEPA observed approximately 75 drums onsite, which were reportedly composited for the sample. OEPA also observed soil staining in a former drum storage area. Drums were observed in varying condition and stored in a wooden barn, outside the wooden barn and inside of a metal storage trailer (Figure 2: Site Layout Map).

On November 10, 2016, Ohio EPA sent the owner of TJT a Notice of Violation letter. The site was referred to the U.S. EPA for further assessment of each of the 55-gallon drum contents, condition and areas of possible soil contamination.

U.S. EPA tasked Tetra Tech START to conduct a removal assessment at the TJT site including drum and soil sampling, identification of each container sampled with documentation, data validation and reporting.

SAMPLE COLLECTION:

During the removal assessment, START and EPA will collect up to 75 samples from abandoned drums and/or containers located on the site and approximately five soil samples from stained areas throughout the site (plus QA/C samples). The sampling procedures are described below in order of occurrence.
Prior to field screening, calibration of all field equipment will be performed in accordance with manufacturer specifications and recorded in the field logbook. START will visually observe the conditions of any drums or containers noting any deteriorations, dents, bulges, or crystallization around seams, bungs, sides of the drum and evidence of leakage around the drum. Prior to opening any drums/containers, field screening will be conducted with the MultiRAE gas monitor and the Ludlum Model 19 MicroR/Ratemeter (Ludlum) to determine if any hazardous airborne concentrations or radioactivity are present in and around the source area. Any enclosed areas, including trailer storage areas, will be screened with a MultiRAE and Ludlum prior to entry. Opened drums/containers will be screened with a MultiRAE and Ludlum prior to commencing sampling. Continuous air monitoring with a MultiRAE and Ludlum will be conducted during drum/container sampling activities.

START will collect liquid/oil and/or solid waste samples from the 55-gallon drums/containers located onsite. The sampling will be conducted in accordance with Tetra Tech SOP No. 008-2, “Containerized Liquid, Sludge, and Slurry Sampling”. Drum and/or container sampling locations will be selected based on observations obtained in the field. Drums and containers will be clearly marked with paint pens, displaying a unique container identification (ID) number for future reference. General locations of drums

will be documented with a global positioning system (GPS) unit. Container ID numbers will be logged on inventory sheets. Samples will collected using disposable Coliwasa samplers or plastic disposable scoops. Based upon site observations and results of field screening, portions of the drum and/or container sampling will be conducted using Level C personal protective equipment (PPE) due to potentially hazardous material in the containers.

Samples will be collected by slowly inserting a disposable Coliwasa sampler through an opening at the top of the container and pushed through to the bottom of the container being sure to capture all stratified layers, if present. When the stopper reaches the bottom of the container or a solid layer, the Coliwasa sampler will be dropped against the stopper to close and lock contents in place. If stratified layers are present, each layer will be placed into a separate sample container. Samples will be poured directly into appropriate containers (see Table 2). Samples will be immediately placed in an iced cooler and maintained at a temperature of 4 ± 2°C without freezing until they are delivered to the laboratory under standard chain of custody protocol.

Samples will be assigned a unique identification number composed of the following information:

- Project name – TJT = Triple J Towing
- Sample number/name – Liquid Waste 01 = LW-01, Solid Waste 01 = SW-01, Bulk Material 01= BM-01, Surface Soil SS-01 = SS-01, Subsurface Soil 01 = SB-01
- Date (mmddyy) = 030617
- Example = TJT-LW-01-030617

The site name, sample time and date, analytical method, sampler initials, sample matrix, and preservation method information will be captured on the laboratory-supplied bottleware labels.

Table 1 is a compilation of sample matrix, analytical methods, number of QA/QC samples, and total samples to be collected. Sample volumes, containers, preservation techniques, and holding times are included in **Table 2**. **Attachment 2** contains SOPs that will be used during the removal assessment.

SAMPLE HANDLING:

Following sample collection, the samples will be placed in an iced cooler and maintained at a temperature of 4°C ± 2°C until they are delivered to the laboratory under standard COC protocol. The samples will be labeled, packaged, and shipped in accordance with procedures outlined in Worksheet No. 26 and No. 27 of Tetra Tech's START QAPP and Tetra Tech SOP No. 019, "Packaging and Shipping Samples" (**Attachment 2**). Samples will be shipped under signed chain-of-custody and analyzed by CT Laboratories, LLC in Baraboo, Wisconsin. Standard turnaround time will be requested for the analytical methods required.

QUALITY ASSURANCE/QUALITY CONTROL:

Blind duplicate QA/QC samples will be collected at a frequency of one (1) for every ten field samples. MS/MSD samples will be collected in the frequency of one (1) for every 20 samples collected for each individual analysis. One (1) equipment rinsate blank will be collected for each day of sampling from any reusable sampling equipment, if utilized. The Tetra Tech field team manager will be responsible for ensuring that sample quality and integrity are maintained and that sample label and documentation procedures are in accordance with the START QAPP and this site-specific abbreviated SAP. When the results are received, a qualified Tetra Tech START chemist will review the laboratory data packages for

completeness in accordance with Tetra Tech's START QAPP and EPA's National Functional Guidelines (Tetra Tech 2016 and EPA 2016). Laboratory results will be submitted in a Level II analytical data validation package.

DECONTAMINATION:

Dedicated sampling equipment will be used to the maximum extent practical to minimize cross-contamination and the need for decontamination. All non-dedicated sampling equipment will undergo a gross decontamination with Alconox®, followed by a double rinse with distilled water in accordance with Tetra Tech SOP No. 002, "General Equipment Decontamination" (**Attachment 2**). Where non-dedicated equipment is used, a rinsate sample will be collected each day that work is performed. Any investigative-derived waste and PPE generated will be segregated and stored at the site, for future disposal.

DATA REPRESENTATIVENESS:

The SAP is designed to obtain data representative of site conditions. If sampling activities vary significantly from this plan because of unexpected conditions in the field or other unforeseeable factors, START will discuss in the removal assessment report how those variations affect data representativeness.

The laboratory will submit analytical data in electronic form. The laboratory results will be validated by a Tetra Tech START chemist. After the data set has been validated and the appropriate data qualifiers have been attached, the electronic data will be released to the START project manager for reporting and Tetra Tech will import the data into the Scribe database.

DELIVERABLES:

START will submit a trip report to EPA that summarizes sampling activities, analytical results (with comparison to TSCA PCB-containing waste criteria), locations and ID of waste containers and provide conclusions.

REFERENCES:

Tetra Tech, Inc. 2016. *Quality Assurance Project Plan for Superfund Technical Assessment and Response Team (START IV) Contract No. EP-S5-13-01*. Chicago, IL. June. Revision 3.

EPA. 2016. *National Functional Guidelines for Superfund Organic Methods Data* Review. EPA-540-R-2016-002. September.

United States Geological Survey. *Fremont, Ohio Quadrangle.* [ca. 1:24,000]. Photorevised 1994.

TABLE 1
SAMPLING REQUIREMENTS WORKSHEET

Matrix*	Parameter	Number of Investigative Samples[a]	Number of Quality Control (QC) Samples[b]				Number of Investigative and QC Samples[c]
			Field Duplicate	MS/MSD	Equipment Blank	Trip Blank	
Liquid/Oil from drums/containers	PCB	75	8	4	1	0	84
Soil from stained areas	PCBs	5	1	0	0	0	6

Notes:

***** Waste may be in solid or liquid form

[a] Refer to Table 2 for required sample volumes, containers, preservation techniques, and holding times.

[b] Refer to Worksheet 20 (Field Quality Control Sample Summary) of the Tetra Tech, Inc. START Region 5 Quality Assurance Project Plan (QAPP) for typical QC sample types and frequencies.

[c] MS/MSD samples are not included in the total sample number because no separate sample is required for MS/MSD analysis, only extra volume is collected for a sample designated for MS/MSD analysis.

EPA U.S. Environmental Protection Agency

MS/MSD Matrix spike/matrix spike duplicate

PCBs Polychlorinated Biphenyls

SW-846 U.S. Environmental Protection Agency, Test Methods for Evaluating Solid Waste, Physical/Chemical Methods (SW-846)

TABLE 2
SAMPLE VOLUMES, CONTAINERS, PRESERVATION TECHNIQUES, AND HOLDING TIMES

Matrix *	Parameter	Concentration Level	Analytical Method	Volumes and Containers	Preservation	Holding Time
Liquid/Oil from drums/containers	PCBs	NA	SW-846 8082A	One 8-ounce glass jar with Teflon®-lined cap. If oily, then use 4-ounce glass jar.	Store at 4 °C	14 days
Soil from stained areas surround the drums	PCBs	NA	SW-846 8082A	One 8-ounce glass jar with Teflon®-lined cap. If oily, then use 4-ounce glass jar.	Store at 4 °C	14 days

Notes:

ºC	degrees Celsius
NA	Not Applicable
SW-846	U.S. Environmental Protection Agency, Test Methods for Evaluating Solid Waste, Physical/Chemical Methods (SW-846)
PCBs	Polychlorinated Biphenyls

ATTACHMENT 1

FIGURES

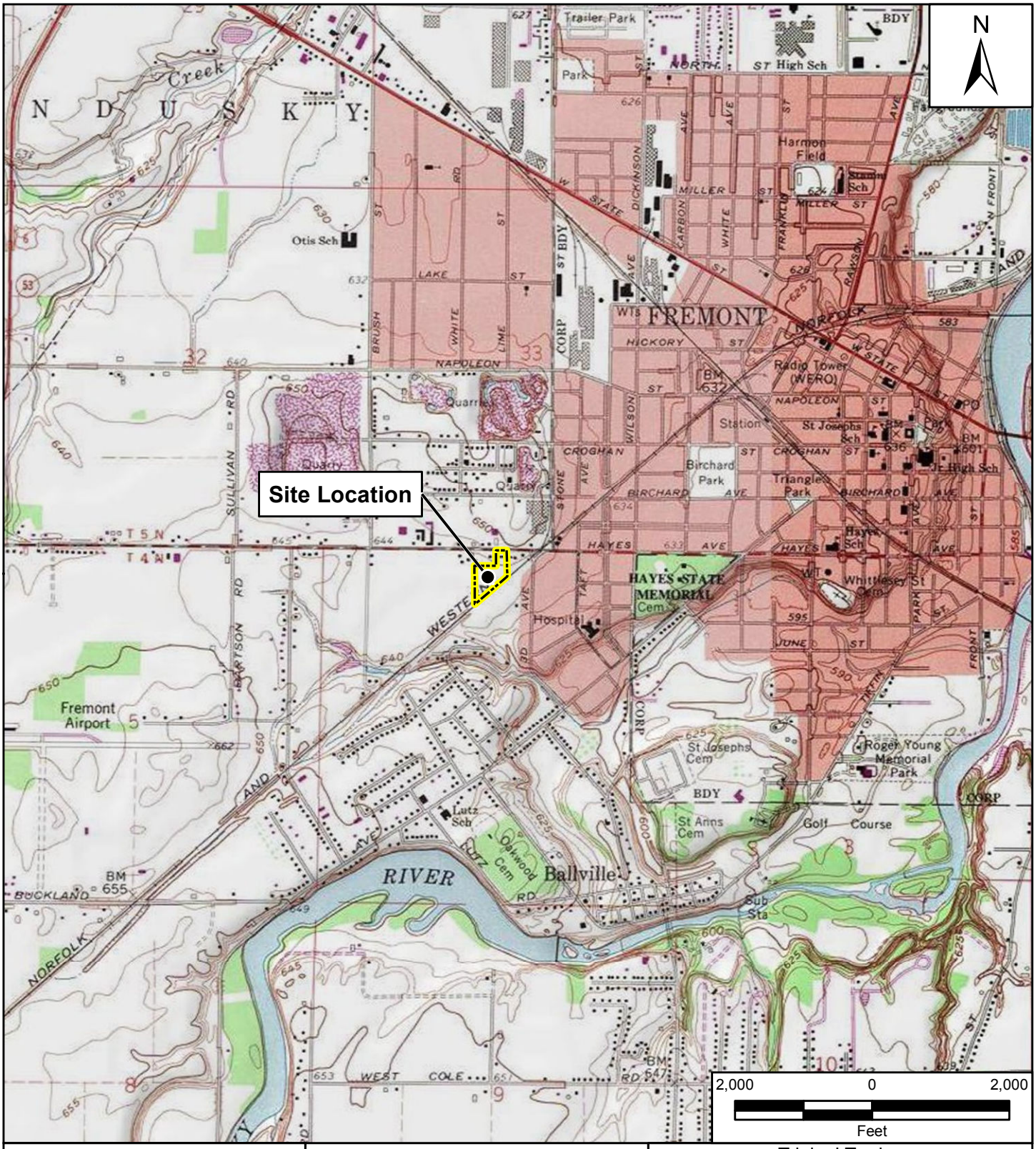

Reference Map

Legend

Approximate Site Boundary

Source: USGS 7.5-Minute Topographic Quadrangle Map
Fremont West, OH 1980

Triple J Towing
2115 Hayes Avenue
Fremont, Sandusky County, Ohio

Figure 1
Site Location Map

TETRA TECH

Prepared For: EPA | Prepared By: Tetra Tech, Inc.

File Path: G:\G\G9026-START I\Ohio\Triple J Towing\mxd\Fig1-SiteLocation.mxd

Date Saved: 2/28/2017 EPA Contract No.: EP-S5-13-01 TDD No.: S05-0001-1702-003

Coordinate System: NAD 1983 StatePlane Ohio North FIPS 3401 Feet
Projection: Lambert Conformal Conic
Datum:North American 1983
Units: Foot US

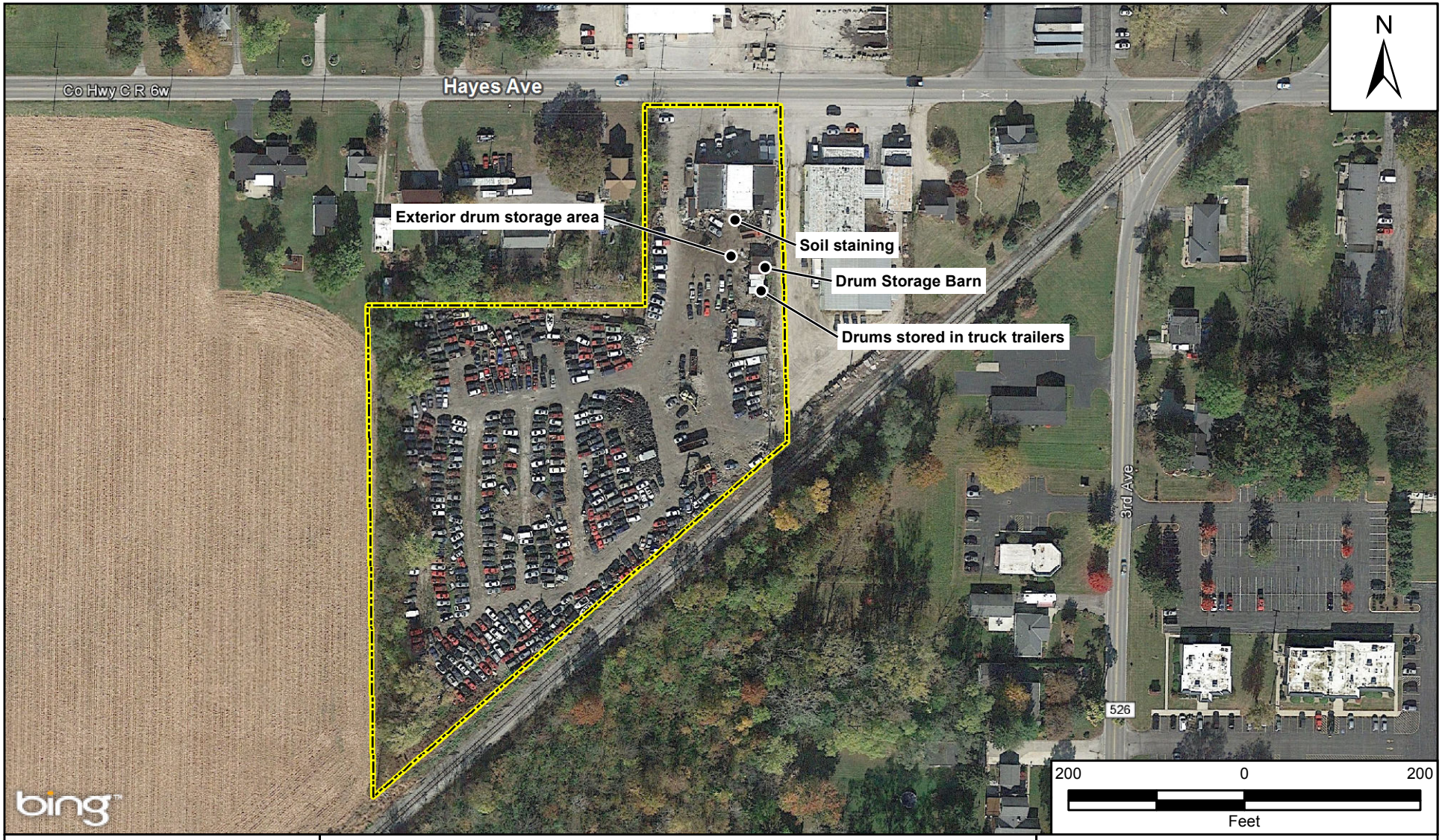

Reference Map

Legend

Approximate Site Boundary

Source: Bing Maps Hybrid 2016

Triple J Towing
2115 Hayes Avenue
Fremont, Sandusky County, Ohio

Figure 2
Site Layout Map

TETRA TECH

Prepared For: EPA | Prepared By: Tetra Tech, Inc.

File Path: G:\G\G9026-START IV\Ohio\Triple J Towing\mxd\Fig2-SiteLayout.mxd

Date Saved: 2/28/2017 | EPA Contract No.: EP-S5-13-01 | TDD No.: S05-0001-1702-003

Coordinate System: NAD 1983 StatePlane Ohio North FIPS 3401 Feet
Projection: Lambert Conformal Conic
Datum:North American 1983
Units: Foot US

ATTACHMENT 2

TETRA TECH
STANDARD OPERATING PROCEDURES (SOPs)

SOP002-3 General Equipment Decontamination
SOP008-2 Containerized Liquid, Sludge and Slurry Sampling
SOP019-7 Packaging and Shipping Samples
SOP024-2 Recording Notes in Field Logbooks
SOP203-0 Laboratory Analytical Data Verification

SOP APPROVAL FORM

TETRA TECH EM INC.

ENVIRONMENTAL STANDARD OPERATING PROCEDURE

GENERAL EQUIPMENT DECONTAMINATION

SOP NO. 002

REVISION NO. 3

Last Reviewed: June 2009

Quality Assurance Approved	6-19-09 Date

1.0 BACKGROUND

All nondisposable field equipment must be decontaminated before and after each use at each sampling location to obtain representative samples and to reduce the possibility of cross-contamination.

1.1 PURPOSE

This standard operating procedure (SOP) establishes the requirements and procedures for decontaminating equipment in the field.

1.2 SCOPE

This SOP applies to decontaminating general nondisposable field equipment. To prevent contamination of samples, all sampling equipment must be thoroughly cleaned prior to each use.

1.3 DEFINITIONS

Alconox: Nonphosphate soap, obtained in powder detergent form and dissolved in water

Liquinox: Nonphosphate soap, obtained in liquid form for mixing with water

1.4 REFERENCES

U.S. Environmental Protection Agency (EPA). 1992a. "Guide to Management of Investigation-Derived Wastes." Office of Solid Waste and Emergency Response. Washington D.C. EPA 9345.3-03FS. January.

EPA. 1992b. "RCRA Ground-Water Monitoring: Draft Technical Guidance." Office of Solid Waste. Washington, DC. EPA/530-R-93-001. November.

EPA. 1994. "Sampling Equipment Decontamination." Environmental Response Team SOP #2006 (Rev. #0.0, 08/11/94). http://www.ert.org/mainContent.asp?section=Products&subsection=List

1.5 REQUIREMENTS AND RESOURCES

The equipment required to conduct decontamination is as follows:

- Scrub brushes
- Large wash tubs or buckets
- Squirt bottles
- Alconox or Liquinox
- Tap water
- Distilled water
- Plastic sheeting
- Aluminum foil
- Methanol or hexane
- Isopropanol (pesticide grade)
- Dilute (0.1 N) nitric acid

2.0 PROCEDURE

The procedures below discuss decontamination of personal protective equipment (PPE), drilling and monitoring well installation equipment, borehole soil sampling equipment, water level measurement equipment, general sampling equipment, and groundwater sampling equipment.

2.1 PERSONAL PROTECTIVE EQUIPMENT DECONTAMINATION

Personnel working in the field are required to follow specific procedures for decontamination prior to leaving the work area so that contamination is not spread off site or to clean areas. All used disposable protective clothing, such as Tyvek coveralls, gloves, and booties, will be containerized for later disposal. Decontamination water will be containerized in 55-gallon drums (refer to Section 3.0).

Personnel decontamination procedures will be as follows:

1. Select an area removed from sampling locations that is both downwind and downgradient. Decontamination must not cause cross-contamination between sampling points.

2. Maintain the same level of personal protection as was used for sampling.

3. Wash neoprene boots (or neoprene boots with disposable booties) with Liquinox or Alconox solution and rinse with clean water. Remove booties and retain boots for subsequent reuse.

4. Wash outer gloves in Liquinox or Alconox solution and rinse in clean water. Remove outer gloves and place into plastic bag for disposal.

5. Remove Tyvek or coveralls. Containerize Tyvek for disposal and place coveralls in plastic bag for reuse.

6. Remove air purifying respirator (APR), if used, and place the spent filters into a plastic bag for disposal. Filters should be changed daily or sooner depending on use and application. Place respirator into a separate plastic bag after cleaning and disinfecting.

7. Remove disposable gloves and place them in plastic bag for disposal.

8. Thoroughly wash hands and face in clean water and soap.

2.2 DRILLING AND MONITORING WELL INSTALLATION EQUIPMENT DECONTAMINATION

All drilling equipment should be decontaminated at a designated location on site before drilling operations begin, between borings, and at completion of the project. Decontamination may be conducted on a temporary decontamination pad constructed at satellite locations within the site area in support of temporary work areas. The purpose of the decontamination pad is to contain wash waters and potentially contaminated soil generated during decontamination procedures. Decontamination pads may be constructed of concrete, wood, or plastic sheeting, depending on the site-specific needs and plans. Wash waters and contaminated soil generated during decontamination activities should be considered contaminated and thus, should be collected and containerized for proper disposal.

Monitoring well casing, screens, and fittings are assumed to be delivered to the site in a clean condition. However, they should be steam cleaned and placed on polyethylene sheeting on-site prior to placement downhole. The drilling subcontractor will typically furnish the steam cleaner and water.

The drilling auger, bits, drill pipe, any portion of drill rig that is over the borehole, temporary casing, surface casing, and other equipment used in or near the borehole should be decontaminated by the drilling subcontractor as follows:

1. Select an area removed from sampling locations that is both downwind and downgradient. Decontamination must not cause cross-contamination between sampling points.

2. Maintain the same level of personal protection as was used for sampling.

3. Remove loose soil using shovels, scrapers, wire brush, etc.
4. Steam clean or pressure wash to remove all visible dirt.
5. If equipment has directly or indirectly contacted contaminated media and is known or suspected of being contaminated with oil, grease, polynuclear aromatic hydrocarbons (PAH), polychlorinated biphenyls (PCB), or other hard to remove organic materials, rinse equipment with pesticide-grade isopropanol.
6. To the extent possible, allow components to air dry.
7. Wrap or cover equipment in clear plastic until it is time to be used.
8. All wastewater from decontamination procedures should be containerized.

2.3 BOREHOLE SOIL SAMPLING DOWNHOLE EQUIPMENT DECONTAMINATION

All soil sampling downhole equipment should be decontaminated before use and after each sample as follows:

1. Select an area removed from sampling locations that is both downwind and downgradient. Decontamination must not cause cross-contamination between sampling points.

2. Maintain the same level of personal protection as was used for sampling.

3. Prior to sampling, scrub the split-barrel sampler and sampling tools in a wash bucket or tub using a stiff, long bristle brush and Liquinox or Alconox solution.

4. After sampling, steam clean the sampling equipment over the rinsate tub and allow to air dry.

5. Place cleaned equipment in a clean area on plastic sheeting and wrap with aluminum foil.

6. Containerize all water and rinsate; disposable single-use sampling equipment should also be containerized.

7. Decontaminate all equipment placed down the hole as described for drilling equipment.

2.4 WATER LEVEL MEASUREMENT EQUIPMENT DECONTAMINATION

Field personnel should decontaminate the well sounder and interface probe before inserting and after removing them from each well. The following decontamination procedures should be used:

1. Select an area removed from sampling locations that is both downwind and downgradient. Decontamination must not cause cross-contamination between sampling points.
2. Maintain the same level of personal protection as was used for sampling.
3. Wipe the tape and probe with a disposable Alconox- or Liquinox-impregnated cloth or paper towel.
4. If immiscible layers are encountered, the interface probe may require steam cleaning or washing with pesticide-grade isopropanol.
5. Rinse with deionized water.

2.5 GENERAL SAMPLING EQUIPMENT DECONTAMINATION

All nondisposable sampling equipment should be decontaminated using the following procedures:

1. Select an area removed from sampling locations that is both downwind and downgradient. Decontamination must not cause cross-contamination between sampling points.
2. Maintain the same level of personal protection as was used for sampling.
3. To decontaminate a piece of equipment, use an Alconox wash; a tap water wash; a solvent (isopropanol, methanol, or hexane) rinse, if applicable, or dilute (0.1 N) nitric acid rinse, if applicable; a distilled water rinse; and air drying. Use a solvent (isopropanol, methanol, or hexane) rinse for grossly contaminated equipment (for example, equipment that is not readily cleaned by the Alconox wash). The dilute nitric acid rinse may be used if metals are the analyte of concern.
4. Place cleaned equipment in a clean area on plastic sheeting and wrap with aluminum foil.
5. Containerize all water and rinsate.

2.6 GROUNDWATER SAMPLING EQUIPMENT

The following procedures are to be employed for the decontamination of equipment used for groundwater sampling. Decontamination is not necessary when using disposable (single-use) pump tubing or bailers. Bailer and downhole pumps and tubing decontamination procedures are described in the following sections.

2.6.1 Bailers

1. Select an area removed from sampling locations that is both downwind and downgradient. Decontamination must not cause cross-contamination between sampling points.

2. Maintain the same level of personal protection as was used for sampling.

3. Evacuate any purge water in the bailer.

4. Scrub using soap and water and/or steam clean the outside of the bailer.

5. Insert the bailer into a clean container of soapy water. Thoroughly rinse the interior of the bailer with the soapy water. If possible, scrub the inside of the bailer with a scrub brush.

6. Remove the bailer from the container of soapy water.

7. Rinse the interior and exterior of the bailer using tap water.

8. If groundwater contains or is suspected to contain oil, grease, PAH, PCB, or other hard to remove organic materials, rinse equipment with pesticide-grade isopropanol.

9. Rinse the bailer interior and exterior with deionized water to rinse off the tap water and solvent residue, as applicable.

10. Drain residual deionized water to the extent possible.

11. Allow components to air dry.

12. Wrap the bailer in aluminum foil or a clean plastic bag for storage.

13. Containerize the decontamination wash waters for proper disposal.

2.6.2 Downhole Pumps and Tubing

1. Select an area removed from sampling locations that is both downwind and downgradient. Decontamination must not cause cross-contamination between sampling points.

2. Maintain the same level of personal protection as was used for sampling.

3. Evacuate any purge water in the pump and tubing.

4. Scrub using soap and water and/or steam clean the outside of the pump and, if applicable, the pump tubing.

5. Insert the pump and tubing into a clean container of soapy water. Pump/run a sufficient amount of soapy water to flush out any residual well water. After the pump and tubing are flushed, circulate soapy water through the pump and tubing to ensure that the internal components are thoroughly flushed.

6. Remove the pump and tubing from the container.

7. Rinse external pump components using tap water.

8. Insert the pump and tubing into a clean container of tap water. Pump/run a sufficient amount of tap water through the pump to evacuate all of the soapy water (until clear).

9. If groundwater contains or is suspected to contain oil, grease, PAH, PCB, or other hard to remove organic materials, rinse the pump and tubing with pesticide-grade isopropanol.

10. Rinse the pump and tubing with deionized water to flush out the tap water and solvent residue, as applicable.

11. Drain residual deionized water to the extent possible.

12. Allow components to air dry.

13. For submersible bladder pumps, disassemble the pump and wash the internal components with soap and water, rinse with tap water, isopropanol (if necessary), and deionized water, and allow to air dry.

14. Wrap pump and tubing in aluminum foil or a clean plastic bag for storage.

15. Containerize the decontamination wash waters for proper disposal.

3.0 INVESTIGATION-DERIVED WASTE

Investigation-derived waste (IDW) can include disposable single-use PPE and sampling equipment, soil cuttings, and decontamination wash waters and sediments. Requirements for waste storage may differ from one facility to the next. Facility-specific directions for waste storage will be provided in project-specific documents, or separate direction will be provided by the project manager. The following guidelines are provided for general use:

1. Assume that all IDW generated from decontamination activities contains the hazardous chemicals associated with the site unless there are analytical or other data to the contrary. Waste solution volumes could vary from a few gallons to several hundred gallons in cases where large equipment required cleaning.

2. Containerized waste rinse solutions are best stored in 55-gallon drums (or equivalent containers) that can be sealed until ultimate disposal at an approved facility.

3. Label IDW storage containers with the facility name and address, date, contents, company generating the waste, and an emergency contact name and phone number.

4. Temporarily store the IDW in a protected area that provides access to the containers and allows for spill/leak monitoring, sampling of containers, and removal following determination of the disposal method.

SOP APPROVAL FORM

TETRA TECH EM INC.

ENVIRONMENTAL STANDARD OPERATING PROCEDURE

CONTAINERIZED LIQUID, SLUDGE, AND SLURRY SAMPLING

SOP NO. 008

REVISION NO. 2

Last Reviewed: January 2000

	May 18, 1993
Quality Assurance Approved	Date

1.0 BACKGROUND

Taking samples of liquid, sludge, and slurry from drums or other containers can present some unique problems. Manmade containers are typically closed. Containers are usually accessed either through small ports, manways, hatches, taps, or bungs. The size, shape, construction material, and location of a container may limit the types of equipment and methods that can be used to collect samples.

1.1 PURPOSE

This standard operating procedure (SOP) establishes procedures for sampling liquid, sludge, and slurry from containers.

1.2 SCOPE

Opening a closed container is a potentially hazardous task because toxic vapors and gases potentially could be released causing explosive reactions. Whenever containers that may contain hazardous materials are to be opened for sampling or any other reason, the sampling team should follow appropriate guidelines provided in site-specific sampling plans, health and safety plans, and the general guidelines in this SOP.

How containers are opened will depend on the purpose of the sampling; site conditions; the number, type, and condition of the containers; and the anticipated type of media to be sampled. As a result, no comprehensive procedures can be defined for sampling all types of containerized liquid, sludge, and slurry. This SOP provides general guidelines for dealing with problems that may be encountered while opening containers and sampling the media. General procedures are provided for sampling containerized liquid, sludge, and slurry using glass tubes and composite liquid waste samplers (COLIWASA).

1.3 DEFINITIONS

Bung Remover: A device used to open the lid of a drum.

COLIWASA: Composite liquid waste sampler used to sample free-flowing liquids and slurries in containers.

Hazardous Samples: Hazardous samples include dangerous goods and hazardous substances. Hazardous samples shipped by air should be packaged and labeled in accordance with procedures specified by the International Air Transportation Association (IATA) Dangerous Goods Regulations (DGR); ground shipments should be packaged and labeled in accordance with the U.S. Department of Transportation (DOT) Hazardous Materials Regulations (HMR, *Code of Federal Regulations*, Title 49 [49 CFR] Parts 106 through 180). See SOP No. 019 (Packaging and Shipping Samples) for additional information.

Photoionization Detector (PID): A direct-reading air monitoring instrument used to measure organic vapors based on the principle of photoionization. Examples of PIDs include the HNu and the Microtip.

Flame Ionization Detector (FID): A direct-reading, air monitoring instrument used to measure organic vapors based on the principle of flame ionization. An example of an FID is an organic vapor analyzer (OVA).

1.4 REFERENCES

American Society for Testing and Materials (ASTM) 1997. "Standard Practice for Sampling With a Composite Liquid Waste Sampler (COLIWASA)." ASTM D 5495-94.

ASTM. 1997. "Standard Guide for Sampling of Drums and Similar Containers by Field Personnel." ASTM D 6063-96.

deVera, E.R., B.P. Simmons, R.D. Stephens, and D.L. Storm. 1980. "Samplers and Sampling Procedures for Hazardous Waste Streams." EPA/600/2-80-018. January.

U.S. Environmental Protection Agency (EPA). 1994. "Drum Sampling." Environmental Response Team SOP #2009 (Rev. #0.0, 11/16/94). On-Line Address: http://204.46.140.12/media_resrcs/media_resrcs.asp?Child1=

1.5 REQUIREMENTS AND RESOURCES

Depending on container specifications and the method selected for collecting samples, the following equipment may be required to sample liquid, sludge, and slurry from containers:

- Glass tubes
- FID or PID
- Bung remover
- COLIWASA
- Rubber stopper
- Stainless-steel spatula
- Chain-of-custody forms and shipping materials
- Sample containers and labels
- Appropriate personal protective equipment (PPE)
- A permanent marker for labeling containers

2.0 PROCEDURES

Opening a closed container may potentially release toxic vapors and gases that could cause an explosive reaction. The decision to open a container to sample the contents should be made only after other potentially less dangerous site characterization methods, such as geophysical investigations or sampling of noncontainerized media, have been ruled out. In some cases, however, sampling the contents of the container may be necessary for use in legal cases or for other reasons.

Until the container contents are characterized, the sampling team should assume that materials in unlabeled containers are hazardous. Labeled containers such as 55-gallon drums are often reused and can be mislabeled. The sampling team should exercise caution when working with or around containers.

When the decision to open a container has been made, the sampling team must assess potential exposure risks. Risk factors include the number, type, and condition of containers; site conditions that could prevent a container from being safely and efficiently opened; and the anticipated contents of the container. Based

on this information and based on the scope of work for the project, the sampling team should consist of at least two persons and develop a safe procedure for opening the container and sampling its contents.

Sampling team members must wear appropriate PPE when opening and sampling containers. In some cases, particularly when the contents of the container are not positively known the sampling team should consider using a remote drum opener to open closed containers. The choice of remote drum opening methods depends on the number of drums to be opened, their contents, and their physical condition. One type of remote drum opener uses hydraulic pressure to push a non-sparking metal spike into either the side or top of the drum.

After the container is opened, headspace gases should be monitored using an intrinsically safe monitoring instrument. At a minimum, a preliminary check using appropriate air-monitoring instruments should be conducted to help determine the level of PPE required and the appropriate sampling method.

Layering or stratification of any material left undisturbed over time is likely. Agitation of the container to homogenize the material can be difficult and is undesirable if the contents of the container are not known. The sampling team must ensure that samples represent the entire contents of the container, not just the contents of a single layer.

For sampling liquid and sludge in drums or other small to medium-sized containers, the glass tube sampling method is recommended. Tubes are available that collect a sample from the full depth of a drum and retain it until placement in a sample container. This sampling method is discussed in detail in Section 2.1. The COLIWASA is widely used to sample containerized and free-flowing liquids and slurries in drums and other containers. It also is used for sampling immiscible liquid-phase waste. Use of the COLIWASA is outlined in Section 2.2.

2.1 SAMPLING USING GLASS TUBES

Glass tubes can be used to sample liquids and sludge in containers such as 55-gallon drums. Glass tubes designed for this purpose are normally 122 centimeters (4 feet) long and have an inside diameter of 0.6 to 1.6 centimeters (0.24 to 0.63 inches). Glass tubes with larger inside diameters are used for sampling

viscous liquids. When sampling is completed, the glass tubes can be broken and disposed of in the container just sampled. This eliminates the need for cleanup and disposal. However, if disposal of the tube by breaking in into the drum interferes with plans for the removal of the container contents, other disposal techniques should be evaluated.

The glass tube method is a quick, relatively inexpensive way of sampling containerized liquid and sludge. The major disadvantage of this method is that some sample loss may occur when sampling less viscous liquids. Splashing of such liquids also can expose sampling team members to potentially hazardous materials. For this reason, appropriate PPE, such as a butyl rubber apron, a face shield, safety glasses, respirators, boot covers, and gloves may be needed when using the glass tube method.

The procedures for sampling liquids and sludge using the glass tube method are given below. Following these procedures, cautionary notes are provided.

2.1.1 Sampling Containerized Liquids Using a Glass Tube

The following procedures can be used to sample containerized liquids using a glass tube:

1. Place all sampling equipment on a plastic sheet next to the container to be sampled. Sample containers should be selected in accordance with the requirements in SOP No. 016, Sample Preservation, Holding Time, and Container Requirements.

2. Affix a completed sample container label to the appropriate sample container.

3. Wear appropriate PPE. Use a PID or FID to monitor airborne organic vapors and gases in the breathing zone. In most cases, a PID is preferred because it is intrinsically safe, although an FID may be appropriate in some cases.

4. Record in the field logbook all exterior container markings, special conditions, and the type of opening through which the sample will be collected.

5. Using a permanent marker, make a unique identifying number on the container.

6. Locate an existing opening or bung hole in the container, if possible.

7. Using nonsparking tools, a bung remover, or a remote drum opener, carefully remove the cover or bung from the container.

8. Slowly insert a glass tube to a level slightly above the bottom of the container or until a solid layer is encountered. If layering or stratification of the liquids in the container is expected, the glass tube should be inserted at a rate that permits the liquid level inside and outside the tube to be about the same. Keep at least 30 centimeters (12 inches) of the glass tube above the top of the container.

9. Allow the liquid in the container to reach its natural level in the glass tube.

10. Cap the top of the glass tube with a safety-gloved thumb or a rubber stopper.

11. Remove the capped glass tube from the container, look for different layers, and insert the uncapped end into the labeled sample container.

12. Release the thumb or rubber stopper from the glass tube to allow the liquid to drain into the sample container.

13. Fill the sample container to approximately 90 percent of its capacity. Repeat steps 8 through 12 if more volume is needed to fill the sample container.

14. Dispose of the glass tube in an appropriate manner.

15. Ensure that a Teflon® liner is present in the sample container cap. Secure the cap tightly on the sample container. All containerized liquid samples should be evaluated in accordance with the "Sample Classification" section of SOP No. 019 (Packaging and Shipping Samples) to determine if they are hazardous samples; hazardous samples should be packaged and shipped in accordance with Dangerous Goods Regulations.

16. Replace the bung in the container or seal the opening in the container with plastic.

17. Complete all chain-of-custody forms and record sampling activities in the field logbook. Unless the sample will be analyzed at the site, complete all sample packaging requirements in accordance with SOP No. 019, Packaging and Shipping Samples.

2.1.2 Sampling Containerized Sludge Using a Glass Tube

The following procedures can be used to sample containerized sludge using a glass tube.

1. Follow steps 1 through 7 for sampling containerized liquids using a glass tube (see Section 2.1.1).

2. Slowly insert a glass tube to a level slightly above the top of the sludge layer. Keep at least 30 centimeters (12 inches) of the glass tube above the top of the container.

3. Allow the liquid in the container to reach its natural level in the glass tube.

4. Gently push the glass tube into the sludge layer at the bottom of the container.

5. Cap the top of the glass tube with a safety-gloved thumb or a rubber stopper.

6. Remove the capped glass tube from the container and insert the uncapped end into the labeled sample container (for example, a wide-mouthed, 8-ounce glass jar).

7. Release the thumb or rubber stopper from the glass tube to allow the material to drain into the sample container. If necessary, the sludge sample in the bottom of the tube may be dislodged using a stainless-steel spatula.

8. Fill the container to approximately 90 percent of its capacity. Repeat steps 2 through 7 if more volume is needed to fill the sample container.

9. Dispose of the glass tube in an appropriate manner.

10. Ensure that a Teflon® liner is present in the sample container cap. Secure the cap tightly on the sample container. All containerized sludge samples should be evaluated in accordance with the "Sample Classification" section of SOP No. 019 (Packaging and Shipping Samples) to determine if they are hazardous samples; hazardous samples should be packaged and shipped in accordance with Dangerous Goods Regulations.

11. Replace the bung in the container or seal the opening in the container with plastic.

12. Complete all chain-of-custody forms and record sampling activities in field logbook. Unless the sample will be analyzed at the site, complete all sample packaging requirements in accordance with SOP No. 019, Packaging and Shipping Samples.

2.1.3 Cautionary Notes

Because there is potential for problems, interferences, and accidents to occur during sampling of containerized liquids and sludges, the following cautionary notes are provided.

1. If you observe any reaction when the glass tube is inserted into the container (for example, violent agitation, smoke, light, or heat), leave the area immediately.

2. If the glass tube becomes cloudy or smoky after inserting it into the container, hydrofluoric acid may be present. Glass tube sampling is inappropriate in this circumstance. Instead, use a comparable length of rigid plastic tubing to collect the sample and transfer the sample to an appropriate sample container.

3. When solid material is encountered in a container (either a floating layer or bottom sludge), use the sludge sampling procedure to collect a sample of the material.

Alternatively, if the container opening is sufficiently large, the material may be sampled with a disposable scoop attached to a disposable wooden or plastic rod.

2.2 SAMPLING USING THE COLIWASA

The COLIWASA is used to collect samples of containerized or free-flowing liquid and slurry in drums and other containers. The COLIWASA is commercially available; however, it can be assembled from a variety of materials, including polyvinyl chloride (PVC), glass, or Teflon®. It consists of a 152-centimeter (5-foot) -long tube with an inside diameter of 4 centimeters (1.6 inches). The tube has a neoprene stopper at one end attached by a rod running the length of the tube to a locking mechanism at the other end. Manipulation of the locking mechanism opens and closes the COLIWASA by raising and lowering the neoprene stopper.

The recommended COLIWASA design is shown in Figure 1. The design may be modified to meet the needs of a sampling situation. The major drawbacks of using a COLIWASA involve decontamination and cost. The COLIWASA is difficult to decontaminate in the field and has a high cost compared to glass tubes. However, disposable COLIWASAs are available and are a viable alternative. The COLIWASA's major advantage is its ability to collect samples that accurately represent a multiphase waste.

The following procedure can be used for sampling containerized liquid or slurry using the COLIWASA:

1. If a commercial COLIWASA is unavailable, select the material to make the COLIWASA (for example, PVC, glass, or Teflon®). Assemble the sampler as shown in Figure 1. Check the COLIWASA to make sure it is functioning properly. Adjust the locking mechanism so that the neoprene stopper provides a thin closure.

2. If using a nondisposable COLIWASA, clean the COLIWASA according to procedures specified in SOP No. 002, General Equipment Decontamination. Place all sampling equipment on a plastic sheet next to the container to be sampled. Sample containers should be selected in accordance with the requirements in SOP No. 016, Sample Preservation, Holding Time, and Container Requirements.

3. Affix a completed sample container label to the appropriate sample container.

4. Wear appropriate PPE. Use a PID or FID to monitor airborne organic vapors and gases in the breathing zone. In most cases a PID is preferred because it is intrinsically safe, although an FID may be appropriate in some cases.

5. Record in the field logbook all exterior container markings, special conditions, and the type of opening through which the sample will be collected.

6. Using a permanent marker, make a unique identifying number on the container.

7. Locate an existing opening or a bung hole in the container, if possible.

8. Using nonsparking tools, a bung remover, or a remote drum opener, carefully remove the cover or bung from the container.

9. Place the COLIWASA in the open (sampling) position. The stopper rod handle should be in the T position, and the rod should be pushed down until the handle rests against the locking block.

10. Slowly lower the COLIWASA into the liquid or slurry at a rate that permits the levels of the liquid or slurry inside and outside the COLIWASA tube to be about the same. If the liquid or slurry level in the COLIWASA tube is lower than that outside the COLIWASA tube, the sampling rate is too fast and will produce a nonrepresentative sample.

11. When the stopper reaches the bottom of the container, push the COLIWASA tube downward against the stopper to close it. Lock the COLIWASA tube in the closed position by turning the stopper rod handle from the T position until it is upright and one end rests tightly against the locking block.

12. Remove the COLIWASA tube from the container and wipe it with a disposable cloth.

13. Slowly discharge the sample into the labeled sample container. To do this, slowly pull the lower end of the stopper rod handle away from the locking block while the lower end of the COLIWASA tube is positioned in the sample container.

14. Ensure that a Teflon® liner is present in the sample container cap. Secure the cap tightly on the sample container. All containerized liquid and slurry samples should be evaluated in accordance with the "Sample Classification" section of SOP No. 019 (Packaging and Shipping Samples) to determine if they are hazardous samples; hazardous samples should be packaged and shipped in accordance with Dangerous Goods Regulations.

15. Replace the bung in the container or seal the opening in the container with plastic.

16. Complete all chain-of-custody forms and record sampling activities in the field logbook. Unless the sample is to be analyzed at the site, complete all sample packaging requirements in accordance with SOP No. 019, Packaging and Shipping Samples.

17. If a disposable COLIWASA was used, dispose of the device in an appropriate manner. Otherwise, unscrew the stopper rod handle of the COLIWASA tube and disengage the locking block. Decontaminate the COLIWASA tube on site or store the contaminated parts in a plastic storage tube for subsequent decontamination using the procedures in SOP No. 002, General Equipment Decontamination.

FIGURE 1

COLIWASA

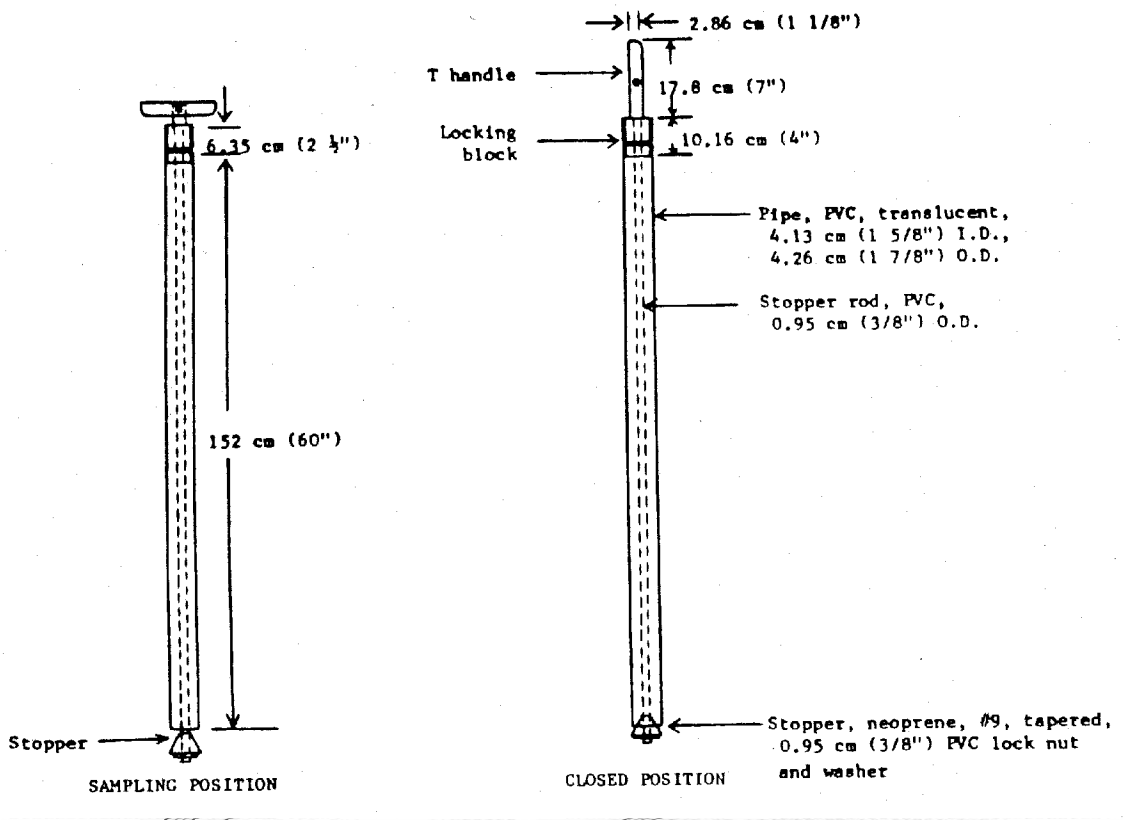

SOP APPROVAL FORM

TETRA TECH, INC.

ENVIRONMENTAL STANDARD OPERATING PROCEDURE

PACKAGING AND SHIPPING SAMPLES

SOP NO. 019

REVISION NO. 7

Last Reviewed: November 2014

Carla J Banks

Quality Assurance Approved	November 24, 2014 Date

1.0 BACKGROUND

In any sampling program, the integrity of a sample must be ensured from its point of collection to its final disposition. This standard operating procedure (SOP) describes procedures for packaging and shipping samples. Steps in the procedures should be followed to ensure sample integrity and to protect the welfare of persons involved in shipping and receiving samples.

1.1 PURPOSE

This SOP establishes the requirements and procedures for packaging and shipping samples. It has been prepared in accordance with the U.S. Environmental Protection Agency (EPA) "Contract Laboratory Program Guidance for Field Samplers." Procedures described in this SOP should be followed for all routine sample packaging and shipping. If procedures are to be modified for particular contract- or laboratory-specific requirements, modified procedures should be clearly described in site-specific plans such as work plans, field sampling plans (FSPs), or quality assurance project plans (QAPPs). Deviations from the procedures in this SOP must be documented in a field logbook. This SOP assumes that samples are already in the appropriate sample jars and that the sample jars are labeled.

This SOP does not cover the packaging and shipment of Dangerous Goods or Hazardous Materials. The shipment of Dangerous Goods (by air) and Hazardous Materials (by ground) requires specialized training. If you have NOT received this training in the last two years, you are NOT qualified to package or ship these materials and may be personally liable for any damages or fines. Contact one of Tetra Tech's shipping experts for assistance. Instructions to access the training course, shipping experts and health and safety (H&S) contacts, and general information on packaging and shipping hazardous substances and dangerous goods can be obtained by checking the links provided in Section 1.4 (References).

1.2 SCOPE

This SOP applies to packaging and shipping of environmental and nonhazardous samples. This SOP does not address shipping dangerous goods or hazardous materials.

1.3 DEFINITIONS

Airbill: An airbill is a shipping form (such as a FedEx shipping form) acquired from the commercial shipper and is used to document shipment of the samples from the sampler to the designated analytical laboratory (see Figure 1).

Custody-of-Custody form: A chain-of-custody form is used to document the transfer of custody of samples from the field to the designated analytical laboratory (see Figure 2). The chain-of-custody form is critical to the chain-of-custody process and is used to identify the samples in each shipping container to be shipped or delivered to the laboratory for chemical or physical (geotechnical) analysis (see Figure 3).

Custody seal: A custody seal is a tape-like seal and is used to indicate that samples are intact and have not been disturbed during shipping or transport after the samples have been released from the sampler to the shipper (see Figure 4). The custody seal is part of the chain-of-custody process and is used to prevent tampering with samples after they have been packaged for shipping (see Figure 5).

Environmental samples: Environmental samples include drinking water, most groundwater and surface water, soil, sediment, treated municipal and industrial wastewater effluent, indoor and ambient air, nonhazardous bulk materials, soil gas, dust, asbestos, and biological specimens. Environmental samples typically contain low concentrations of contaminants and, when handled, require only limited precautionary procedures.

Field Blank: A field blank is any blank sample that is packaged and shipped from the field. Each field blank is assigned its own unique sample number. Field blanks include trip blanks, rinse blanks, and equipment blanks, all intended to assess potential cross-contamination. For example, a trip blank checks for contamination during sample handling, storage, and shipment from the field to the laboratory.

Nonhazardous samples: Nonhazardous samples are those samples that do not meet the definition of a hazardous sample and **do not** need to be packaged and shipped in accordance with the International Air Travel Association's (IATA's) "Dangerous Goods Regulations" (DGR) or U.S. Department of Transportation's (U.S. DOT's) "Hazardous Materials Regulations" (HMR) defined in Title 49 Code of Federal Regulations (CFR).

The following definitions are provided to further distinguish environmental and nonhazardous samples from dangerous good and hazardous samples:

Dangerous goods: Dangerous goods are articles or substances that can pose a significant risk to health, safety, or property when transported by air; they are classified as defined in Section 3 of the DGR (IATA 2014).

Hazardous samples: Hazardous samples include dangerous goods and hazardous substances. Hazardous samples shipped by air should be packaged and labeled in accordance with procedures specified by the DGR; ground shipments should be packaged and labeled in accordance with the HMR.

Hazardous substance: A hazardous substance is any material, including its mixtures and solutions, that is listed in 49 CFR 172.101 and its quantity, in one package, equals or exceeds the reportable quantity (RQ) listed in Table 1 to Appendix A of 49 CFR 172.101.

1.4 REFERENCES

General Awareness, H&S contacts, and course training information" click here. (Tetra Tech, Inc., EMI Operating Unit. Intranet) Available on-line at: https://int.tetratech.com/sites/EMI/hs/Pages/Dangerous-Goods-Shipping.aspx

International Air Transport Association (IATA). 2014. "Dangerous Goods Regulations. 2014." For sale at: http://www.iata.org/publications/Pages/standards-manuals.aspx. Updated annually, with new edition available late in year.

U.S. Environmental Protection Agency (EPA). 40 CFR, 763 Subpart F, Asbestos Hazards Emergency Response Act (AHERA).

EPA. 2011. "Contract Laboratory Program Guidance for Field Samplers." EPA 540-R-09-03. Available on-line at: http://www.epa.gov/oerrpage/superfund/programs/clp/download/sampler/CLPSamp-01-2011.pdf. January.

1.5 REQUIREMENTS AND RESOURCES

The procedures for packaging and shipping samples require the following:

- Coolers (insulated ice chest) or other shipping containers appropriate to sample type
- Ice
- Bubble wrap or similar cushioning material
- Chain-of-custody forms and seals
- Airbills
- Resealable plastic bags for sample jars and ice
- Tape (strapping and clear)
- Large plastic garbage bags for lining the cooler
- Temperature blank sample bottle filled with distilled water can be included in the cooler if appropriate to sample type

- Trip blank samples used to check for volatile contamination during sample handling in the field and shipment from field to laboratory should be included in the cooler if volatile organic compounds are requested for analysis. Also see Field Blank under definitions.

2.0 PROCEDURES

The following procedures apply to packaging and shipping nonhazardous and environmental samples.

2.1 PACKAGING SAMPLES

After they have been appropriately containerized and labeled, environmental samples should be packaged as described in this section. This section covers procedures for packing samples for delivery by commercial carrier (air or ground) and hand delivery of environmental samples (by employee or courier), as well as shipping asbestos and air quality samples. Note that these instructions are general; samplers also should be aware of client-specific requirements concerning the placement of custody seals or other packaging provisions.

2.1.1 Packaging Samples for Delivery by Commercial Carrier (Air or Ground)

Samples shipped by commercial carriers should be packed for shipment using the following procedures and in compliance with all carrier requirements:

Preparing the sample:

1. Allow a small amount of headspace in all bottles, or as instructed by the laboratory (except volatile organic compound [VOC] containers with a septum seal) to compensate for any changes in pressure and temperature during transfer.
2. Be sure the lids on all bottles are tight (will not leak). Lids maybe taped or sealed with custody seals as added protection or as required.
3. Place sample containers in resealable plastic bags.

Preparing the cooler:

1. Secure and tape the drain plug of the cooler with fiber or duct tape.
2. It is recommended that the cooler be lined with a large plastic garbage bag before samples, ice, and absorbent packing material are placed in the cooler.
3. Wrap the sample containers in bubble wrap or line the cooler (bottom and sides) with a cushioning material to prevent breakage of bottles or jars during shipment.
4. Add a sufficient quantity of ice to the cooler to cool samples to 4 °C ($\pm$ 2 °C). Ice should be double bagged in resealable plastic bags to prevent the melted ice from leaking out. If required, include one temperature blank (a sample bottle filled with distilled water) per cooler.

5. For volatile organic analysis (VOA) samples only, include one trip blank for VOA analysis per shipment matrix in each cooler.
6. Fill all remaining space between the bottles or jars with bubble wrap.
7. Securely fasten the top of the large garbage bag with tape (preferably plastic electrical tape).
8. If more than one cooler is being shipped, mark each cooler as “1 of 2,” “2 of 2,” and so forth.
9. Place the chain-of-custody forms (see Figure 2) into a resealable plastic bag, and tape the bag to the inner side of the cooler lid (see Figure 3). If you are shipping more than one cooler, copy the chain-of-custody form so that there is one copy of all forms in each cooler. The samples listed on the chain-of-custody form must match exactly with the contents of the cooler. Tape any instructions for returning the cooler to the inside of the lid.
10. Close the lid of the cooler and tape it shut by wrapping strapping tape around both ends and hinges of the cooler at least once.
11. Place two signed custody seals (see Figure 4) on opposite sides of the cooler, ensuring that each one covers the cooler lid and side of the cooler (see Figure 5; note that in contrast to the figure, the seals should be placed on the opposite sides of the cooler and offset from each other, rather than directly across from each other as shown in Figure 5). Place clear plastic tape over the custody seals so that the cooler cannot be opened without breaking the seal.
12. Shipping containers must be marked "THIS END UP.” Arrow labels, which indicate the proper upward position of the container, may also be affixed to the container (see Figures 3 and 5). A label containing the name, phone number, and address of the shipper should be placed on the outside of the container (Federal Express [FedEx] label) (see Figure 1).
13. Ship samples overnight using a commercial carrier such as FedEx.

2.1.2 Hand Delivery of Environmental Samples (by Employee or Courier)

Samples hand-delivered to the laboratory should be packed for shipment using the following procedures:

Preparing the sample:

1. Bottles can be filled completely with sample (required for VOC containers with a septum seal).
2. Be sure the lids on all bottles are tight (will not leak).

Preparing the cooler:

1. Secure and tape the drain plug of the cooler with fiber or duct tape.
2. Wrap the sample containers in bubble wrap and/or line the cooler (bottom and sides).
3. Add a sufficient quantity of ice to the cooler to cool samples to 4 °C. Ice should be double bagged in resealable plastic bags to prevent the melted ice from leaking out. If required, include one temperature blank (a sample bottle filled with distilled water) per cooler.
4. For VOA samples only, include one trip blank for VOA analysis per shipment matrix in each cooler.
5. If more than one cooler is being shipped, mark each cooler as “1 of 2,” “2 of 2,”and so forth.

6. Place chain-of-custody form (see Figure 2) in a resealable plastic bag and tape to the inside of the cooler lid, close the lid, seal with custody seals, and transfer the cooler to the courier (see Figure 3). Alternatively, when samples will be delivered directly to the laboratory, close the cooler and hand-deliver it with the chain-of-custody form. The samples listed on the chain-of-custody form must match exactly with the contents of the cooler.
7. Include any instructions for returning the cooler to the inside of the lid.
8. Place two signed custody seals (see Figure 4) on opposite sides of the cooler, ensuring that each one covers the cooler lid and side of the cooler (see Figure 5, note that the seals should be placed on the opposite sides of the cooler and offset from each other, rather than directly across from each other as shown in Figure 5). Place clear plastic tape over the custody seals so that the cooler cannot be opened without breaking the seal.
9. Shipping containers must be marked "THIS END UP," and arrow labels, which indicate the proper upward position of the container should be affixed to the container (see Figures 3 and 5).

2.1.3 Shipping Asbestos Samples

Asbestos samples shipped by commercial carriers should be packed for shipment using the following procedures and in compliance with all carrier requirements:

1.` Place each asbestos sample in a small resealable plastic bag. Place the bags of asbestos samples in a large resealable plastic bag.
2. Select a rigid shipping container (FedEx box) and pack the cassettes upright in a noncontaminating, nonfibrous medium such as a bubble pack to prevent excessive movement during shipping.
3. Avoid using expanded polystyrene because of its static charge potential. Also avoid using particle-based packaging materials because of possible contamination.
4. Affix custody seals to the top of the cassettes or outer sample bag so that the bags cannot be opened without breaking the seal.
5. Insert the chain-of-custody form in the box. Include a shipping bill and a detailed listing of samples shipped, their descriptions and all identifying numbers or marks, sampling data, shipper's name, and contact information.
6. Ship bulk samples in a separate container from air samples. Bulk samples and air samples delivered to the analytical laboratory in the same container will be rejected.
7. For each sample set, designate which are the ambient samples, which are the abatement area samples, which are the field blanks, and which is the sealed blank if sequential analysis is to be performed.
8. Hand-carry samples to the laboratory in an upright position if possible; otherwise, choose that mode of transportation least likely to jar the samples in transit.
9. Address the package to the laboratory sample coordinator by name when known and alert him or her of the package description, shipment mode, and anticipated arrival as part of the chain-of-custody and sample tracking procedures. This information will also help the laboratory schedule timely analysis for the samples when they are received.

2.1.4 Shipping Air Samples

Packaging and shipping requirements for air samples vary depending on the media used to collect the samples and the analyses required. Sampling media typically include Summa canisters and Tedlar bags for whole air samples, filters for metals and particulate matter, and sorbent tubes for organic contaminants. This section of the SOP provides general guidelines for packaging and shipping air samples collected using these media. The project FSP or QAPP should also be reviewed for any additional project-specific requirements or instructions.

Summa Canister Samples

1. Close the canister valve by tightening the knob clockwise or flipping the toggle switch. Replace the brass cap on the canister inlet.
2. If a flow controller was used to collect the air sample over a specified time interval, the flow controller should be removed before replacing the brass cap.
3. Fill out the sample tag on the canister with the sample number and the date and time of collection. Include the identification number of the flow controller on the sample tag if one was used. Make sure the information on the sample tag matches the chain-of-custody form.
4. Complete the chain-of-custody form. In addition to the information normally included, the form should include the following data: sample start and stop dates and times; initial and final Summa canister vacuum readings; Summa canister identification number; and flow controller identification number.
5. Package the Summa canister (and flow controller) in its original shipping box with the original packaging material. Tape the box shut and apply custody seals if required. Note: Summa canisters should never be packaged with ice.
6. Summa canister shipments typically include several canisters, and may include more than one shipping box. The chain-of-custody form for the shipment should be sealed within one of the shipping boxes.
7. Ship the samples by a method that will meet the holding time. Summa canister samples should be analyzed within 30 days of sample collection.

Tedlar Bag Samples

1. Close the Tedlar bag by tightening the valve clockwise.
2. Fill out the label on the bag with the sample number and the date and time of sample collection. Make sure the information on the label matches the chain-of-custody form.
3. Complete the chain-of-custody form.
4. Package the Tedlar bag in a shipping box with appropriate packing material. Multiple bags can be packaged in the same box. Tape the box shut and apply custody seals if required. Note: Tedlar bag samples should not be cooled or packaged with ice.
5. Tedlar bag shipments may include more than one shipping box. The chain-of-custody form for the shipment should be sealed within one of the shipping boxes.

6. Ship the samples using priority overnight delivery. Tedlar bag samples should be analyzed within 3 days of sample collection.

Filter Cassette Samples

1. Disconnect the filter cassette from the air sampling pump and replace the plastic caps on the inlet and outlet openings.
2. Attach a label to the sample that includes the sample number and the date and time of sample collection. Make sure the information on the label matches the chain-of-custody form.
3. Complete the chain-of-custody form. In addition to the information normally included, the form should include the following data: sample start and stop dates and times; initial and final air flow rates (or average flow rate); volume of air sampled; and sampling pump identification number.
4. Package the filter cassettes in a shipping box (such as a FedEx box). Use an appropriate packing material (such as bubble wrap) to separate the samples and prevent damage.
5. Place the chain-of-custody form within the box, seal the box, and apply custody seals if required. Filter cassette samples typically do not need to be cooled, but check the FSP or QAPP for project-specific requirements.
6. Ship the samples by a method that will meet the holding time.

Sorbent Tube Samples

1. Disconnect the sample tube from the air sampling pump and seal both ends of the tube with plastic caps.
2. Complete a sample label that includes the sample number and the date and time of sample collection. Make sure the information on the label matches the chain-of-custody form.
3. If the tube is small and the label cannot be attached to the tube, the tube can be placed in a small sealable plastic bag and the label can be attached to the bag or placed inside the bag with the tube.
4. Complete the chain-of-custody form. In addition to the information normally included, the form should include the following data: sample start and stop dates and times; initial and final air flow rates (or average flow rate); volume of air sampled; and sampling pump identification number.
5. Packaging requirements for the sample tubes will depend on the analysis required, and the sampler should check the FSP or QAPP for project-specific requirements (for example, tubes may need to be wrapped in aluminum foil to prevent exposure to light). Packaging containers and methods include (1) shipping boxes (as described under filter cassette samples), (2) small sample coolers filled with double-bagged ice, and (3) small sample coolers filled with blue ice.
6. Place the chain-of-custody form within the box or container, seal the box or container, and apply a custody seal if required.
7. If coolers are used for shipping, tape instructions for returning the cooler to the inside of the lid.
8. Ship the samples by a method that will meet the holding time.

Polyurethane Foam (PUF) Tube Samples

1. Disconnect the PUF tube from the air sampling pump and wrap the tube in aluminum foil.
2. Attach a label to the wrapped sample tube that includes the sample number and the date and time of sample collection. Make sure the information on the label matches the chain-of-custody form.
3. Wrap the PUF tube in bubble wrap and place the tube in a glass shipping jar.
4. Complete the chain-of-custody form. In addition to the information normally included, the form should include the following data: sample start and stop dates and times; initial and final air flow rates (or average flow rate); volume of air sampled; and sampling pump identification number.
5. Package the PUF tube jars in a cooler that is filled with double-bagged ice. Use bubble wrap or other cushioning material to separate the samples and prevent breakage.
6. Place the chain-of-custody form within the cooler, seal the cooler, and apply a custody seal if required.
7. If coolers are used for shipping, tape instructions for returning the cooler to the inside of the lid.
8. Ship the samples by a method that will meet the holding time. Samples collected in PUF tubes typically must be extracted within 7 days of collection.

2.2 SHIPPING DOCUMENTATION FOR SAMPLES

Airbills, chain-of-custody forms, and custody seals must be completed for each shipment of nonhazardous environmental samples. Figures 1, 2, and 4 provide examples of these forms and instructions for completing them.

Field staff collecting samples should also review their field work plans to confirm what documentation must be completed during each sampling event, including client-specific requirements. For example, some EPA programs have a specific requirement to use Scribe software, an environmental data management system, to create sample documentation, electronically input information into Traffic Report or chain-of-custody forms, and enter other data.

- The Scribe software can be accessed from the EPA Environmental Response Team (ERT) at the following address: http://www.ertsupport.org/scribe_home.htm
- The ERT User Manual for Scribe, reference, and training materials can be accessed from the Scribe Support Web site at the following address: http://www.epaosc.org/scribe

Note that some laboratories must routinely return sample shipping coolers within 14 calendar days after the shipment has been received. Therefore, the sampler should also include instructions for returning the cooler with each shipment, when possible. The sampler (not the laboratory) is responsible for paying for return of the cooler and should include shipping airbills bearing the sampler's shipping account number,

as well as a return address to allow for return of the cooler (see Figure 1). Samplers should use the least expensive option possible for returning coolers.

2.3 SHIPMENT DELIVERY AND NOTIFICATION

A member of the field sampling team must contact the laboratory to confirm it accepts deliveries on any given day, especially Saturdays. In addition, samplers should ensure the laboratory has been notified in advance of the pending shipment and notify any additional parties as required. The sampler needs to know the laboratory's contact name, address, and telephone number and be aware of the laboratory's requirements for receiving samples.

The sampler needs to know the shipping company's name, address, and telephone number (see Figure 1). In addition, samplers should be aware of the sample holding times, shipping company's hours of operation, shipping schedule, and pick-up and drop-off requirements to avoid delays in analytical testing.

Priority Overnight Delivery

Priority overnight delivery is typically the best method for shipment. Delays caused by longer shipment times may cause the sample temperature to rise above the acceptable range of 4° C (± 2 ° C) and technical holding may expire, which in turn may compromise sample integrity and require recollection of samples for analysis. If sample delivery procedures are to be modified for particular contract- or laboratory-specific requirements, the procedures should be clearly described in site-specific plans such as work plans, FSPs, or QAPPs.

Saturday Delivery

If planning to ship samples for Saturday delivery, the laboratory must be contacted in advance to confirm it will accept deliveries on Saturdays or arrange for them to be accepted. In addition, samplers should ensure the laboratory has been notified in advance of the pending shipment and notify any additional parties as required.

2.4 HEALTH AND SAFETY CONSIDERATIONS

In addition to the procedures outlined in this SOP, all field staff must be aware of and follow the health and safety practices that result from the Activity Hazard Analyses (AHA) for the project. The AHAs include critical safety procedures, required controls, and minimum personal protective equipment (PPE) necessary to address potential hazards. The hazards specific to project tasks must be identified and

controlled to the extent practicable and communicated to all project personnel via the approved, project-specific Health and Safety Plan (HASP).

3.0 POTENTIAL PROBLEMS

The following potential problems may occur during sample shipment:

- Leaking package. If a package leaks, the carrier may open the package and return the package. Special care should be taken during sample packaging to minimize potential leaks.
- Improper labeling and marking of package. If mistakes are made in labeling and marking the package, the carrier will most likely notice the mistakes and return the package to the shipper, thus delaying sample shipment. A good practice is to have labels, forms, and container markings double checked by a member of the field team.
- Bulk samples and air samples delivered to the analytical laboratory in the same container. If samples are combined in this way, they will be rejected. Always ship bulk samples in separate containers from air samples.
- Issues in packing asbestos samples. When asbestos samples are shipped, avoid using expanded polystyrene because of its static charge potential. Also avoid using particle-based packaging materials with asbestos samples because of possible contamination.
- Improper, misspelled, or missing information on the shipper's declaration. The carrier will most likely notice these errors as well and return the package to the shipper. A good practice is to have another field tram member double check this information.
- Missed drop off time or wrong location. Missing the drop off time or having the wrong location identified for drop off will delay delivery to the laboratory and may cause technical holding times to expire. Establish the time requirements in advance of completing the field effort and be sure and provide some contingency time for potential delays such as traffic or checking and redoing paperwork.
- Incorrectly packaging samples for analysis at multiple laboratories. For example, inorganic samples may be shipped to one laboratory for analysis, while organic samples may need to be shipped to another laboratory. All field staff should be aware which samples are to be shipped to which laboratory they package samples for multiple types of analysis.
- Holidays or weather-related delays. Be aware of holidays and weather forecasts that could cause delays in delivery. Delays caused by longer shipping times may cause technical holding times to expire, which in turn may compromise sample integrity or require recollection of samples for analysis.
- Not noting field variances in field log book. Field variances should be noted in the field log book and the project manager notified. Common field variances include:
  - Less sample volume collected than planned. Notify appropriate staff and the laboratory to ensure there is an adequate amount for analysis.

- Sample collected into incorrect jar because of broken or missing bottle-ware. Notify appropriate laboratory staff to ensure there is no confusion regarding the analysis of the sample.

FIGURE 1

EXAMPLE OF A FEDEX US AIRBILL FOR LOW LEVEL ENVIRONMENTAL SAMPLES

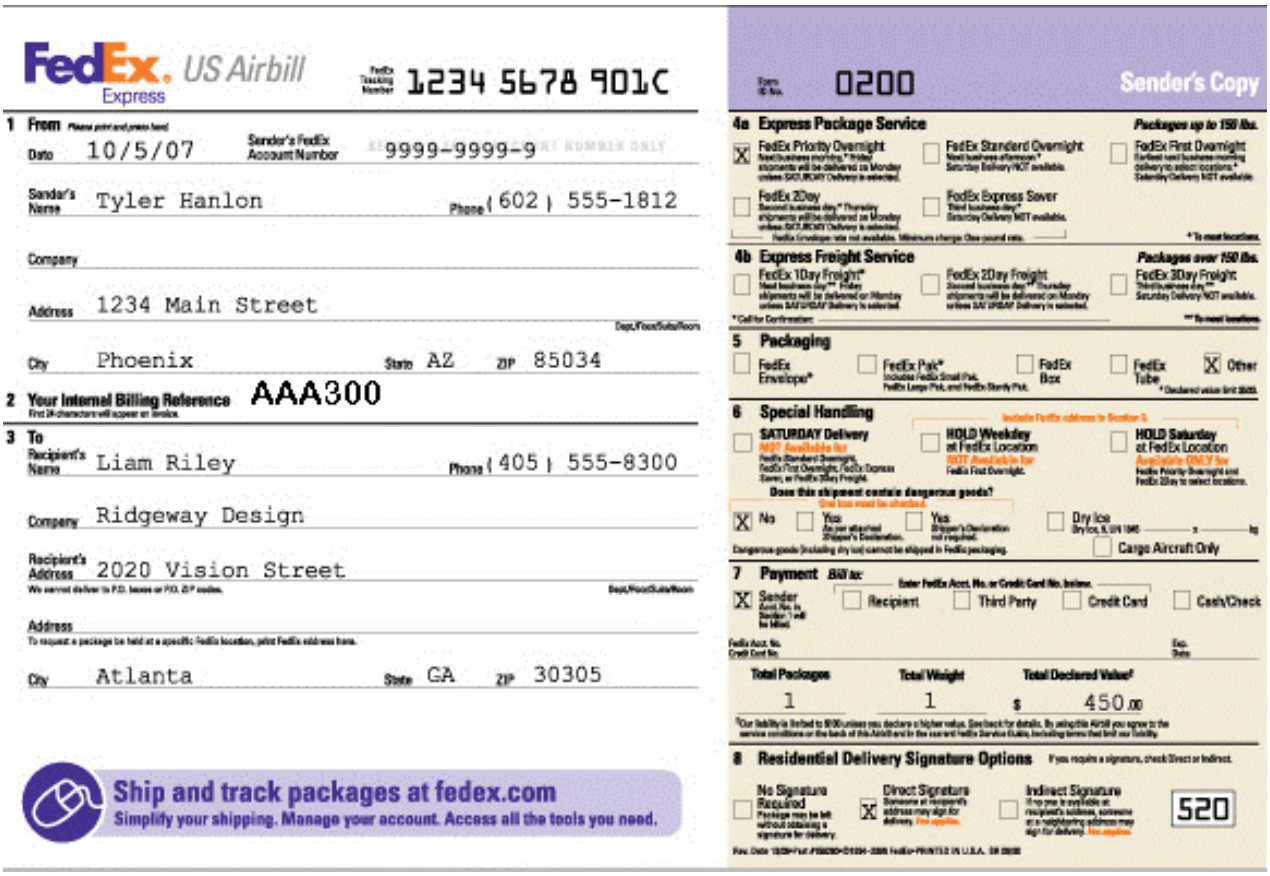
FedEx Express US Airbill
1234 5678 901C
0200
Sender's Copy
1 From
Date 10/5/07
Sender's FedEx Account Number 9999-9999-9
Sender's Name Tyler Hanlon
Phone (602) 555-1812
Company
Address 1234 Main Street
City Phoenix
State AZ
ZIP 85034
2 Your Internal Billing Reference AAA300
3 To
Recipient's Name Liam Riley
Phone (405) 555-8300
Company Ridgeway Design
Recipient's Address 2020 Vision Street
Address
City Atlanta
State GA
ZIP 30305
Ship and track packages at fedex.com
Simplify your shipping. Manage your account. Access all the tools you need.
4a Express Package Service
Packages up to 150 lbs.
FedEx Priority Overnight
FedEx Standard Overnight
FedEx First Overnight
FedEx 2Day
FedEx Express Saver
4b Express Freight Service
Packages over 150 lbs.
FedEx 1Day Freight
FedEx 2Day Freight
FedEx 3Day Freight
5 Packaging
FedEx Envelope
FedEx Pak
FedEx Box
FedEx Tube
Other
6 Special Handling
SATURDAY Delivery
HOLD Weekday at FedEx Location
HOLD Saturday at FedEx Location
Does this shipment contain dangerous goods?
No
Yes
Dry Ice
Cargo Aircraft Only
7 Payment Bill to:
Sender
Recipient
Third Party
Credit Card
Cash/Check
Total Packages 1
Total Weight 1
Total Declared Value $ 450.00
8 Residential Delivery Signature Options
No Signature Required
Direct Signature
Indirect Signature
520

Filling Out the FedEx US Airbill

- The sender *must complete* the following fields on the pre-printed airbill:
  - Section 1: Date
  - Section 1: Sender's FedEx Account Number
  - Section 1: Sender's Name, Company, Address, and Phone Number
  - Section 2: Internal Billing Reference (Project Number)
  - Section 3: Recipient's Name, Company, Address, and Phone Number
  - Section 4: Express Package or Freight Services (Priority Overnight)
  - Section 5: Packaging (usually "Other," your own packaging)
  - Section 6: Special Handling (Saturday delivery if prearranged with receiving laboratory; "No" dangerous goods contained in shipment)
  - Section 7: Payment ("Bill to Sender")
  - Section 7: Total Number of Packages
  - Section 7: Total Weight (completed by FedEx employee)
  - Section 8: Delivery Signature Options ("No Signature Required")

FIGURE 2

EXAMPLE OF A CHAIN-OF-CUSTODY FORM (WHITE COPY)

Tetra Tech EM Inc.
Oakland Office
1999 Harrison Street, Suite 500
Oakland, CA 94612
510.302.6300 Phone
510.433.0830 Fax

Chain of Custody Record No. 9814 13G175 Page 1 of 1

Lab PO#: 13OAk27
Lab: EMAX
Project name: Concord DA RWI
TtEMI technical contact: Sara Woolley
Field samplers: Sandy Jack, Rebecca Johnson
Project (CTO) number: 1036A59029
TtEMI project manager: Steve Dellhomme
Field samplers' signatures:

Preservative Added: None, None, None

No./Container Types: 40 ml VOA, 1 liter Amber, 500 ml Poly, Sleeve, Glass Jar 8oz, 250 ml Poly, Encore

Analysis Required: VOA, SVOA, Pest, Metals, TPH Purgeables, TPH Extractables, PCB

	Sample ID	Point ID/Depth	Date	Time	Matrix	MS / MSD	40 ml VOA	1 liter Amber	500 ml Poly	Sleeve	Glass Jar 8oz	250 ml Poly	Encore	VOA	SVOA	Pest	Metals	TPH Purgeables	TPH Extractables	PCB
1	029SRE SS01		7/22/13	1240	Soil						2				X	X	X	X	X	
2	029SRE SS02		7/22/13	1245							2				X	X	X	X	X	
3	029PBC3DSS01		7/24/13	1200							1				X	X	X	X		
4	029C3DSS02			1215							1				X	X	X	X		
5	029C3DSS03			1230							1				X	X	X	X		
6	029C3DSS04			1245							1				X	X	X	X		

	Name (print)	Company Name	Date	Time
Relinquished by:	Rebecca Johnson	TtEMI	7/30/13	1630
Received by:	Cecilia Chavez	EMAX	7/30/13	09:30
Relinquished by:				
Received by:				
Relinquished by:				
Received by:				

Turnaround time/remarks: Standard TAT
Prioritize: SVOCs, TPH-e on 029C3DSS01 → 04 thermetals
Temp – 20°C

Fed Ex #: 8612 4667 7215

1002

WHITE-Laboratory Copy YELLOW-Sample Tracker PINK-File Copy

Completing a Sample Chain-of-Custody Form

After samples have been collected, they will be maintained under chain-of-custody procedures. These procedures are used to document the transfer of custody of the samples from the field to the designated analytical laboratory. The same chain-of-custody procedures will be used for the transfer of samples from one laboratory to another, if required.

The field sampling personnel will complete a Chain-of-Custody and Request for Analysis (CC/RA) Form (Figure 1, Chain of Custody Record) for each separate container of samples to be shipped or delivered to the laboratory for chemical or physical (geotechnical) analysis. Information contained on the triplicate, carbonless form will include:

1. Project identification (ID) (for example, contract and task order number);
2. Project Contract Task Order (CTO) number;
3. Laboratory Project Order (PO) number;
4. Tetra Tech Technical Contact;
5. Tetra Tech Project Manager
6. Laboratory name;
7. Field sampler names;
8. Field sampler signature;
9. Sample ID;
10. Point ID and Depth (Do **NOT** include this information on the laboratory copy of the chain-of-custody (top white copy);
11. Date and time of sampling;
12. Sample matrix type;
13. Sample preservation method; note “NONE” if no preservatives;
14. Number and types of sample containers and container capacity;
15. Sample hazards (if any);
16. Requested analysis;
17. Requested sample turnaround time or any special remarks;
18. Page __ of __;
19. Method of shipment;
20. Carrier/waybill number (if any);
21. Signature, name, and company of the person relinquishing the samples and the person receiving the samples when custody is transferred;
22. Date and time of sample custody transfer;

23. Condition of samples when they are received by the laboratory.

The sample collector will cross out any blank space on the CC/RA Form below the last sample number listed on the part of the form where samples are listed.

The sampling personnel whose signature appears on the CC/RA Form is responsible for the custody of a sample from time the sample is collected until the custody of the sample is transferred to a designated laboratory, a courier, or to another Tetra Tech employee for transporting a sample to the designated laboratory. A sample is considered to be in custody when the custodian: (1) has direct possession of it; (2) has plain view of it; or (3) has securely locked it in a restricted access area.

Custody is transferred when both parties to the transfer complete the portion of the CC/RA Form under "Relinquished by" and "Received by" or a sample is left at a FedEx facility pending shipment. Signatures, printed names, company names, and date and time of custody transfer are required. When custody is transferred, the Tetra Tech sampling personnel who relinquished the samples will retain the third sheet (pink copy) of the CC/RA Form. When the samples are shipped by a common carrier, a Bill of Lading supplied by the carrier will be used to document the sample custody, and its identification number will be entered on the CC/RA Form. Receipts of Bills of Lading will be retained as part of the permanent documentation in the Tetra Tech project file.

FIGURE 3

EXAMPLE OF A SAMPLE COOLER WITH ATTACHED DOCUMENTATION

Place the necessary paperwork (chain-of-custody form, cooler return instructions, and associated paperwork) in the shipping cooler or acceptable container. All paperwork must be placed in a plastic bag or pouch and then secured to the underside of the shipping container lid.

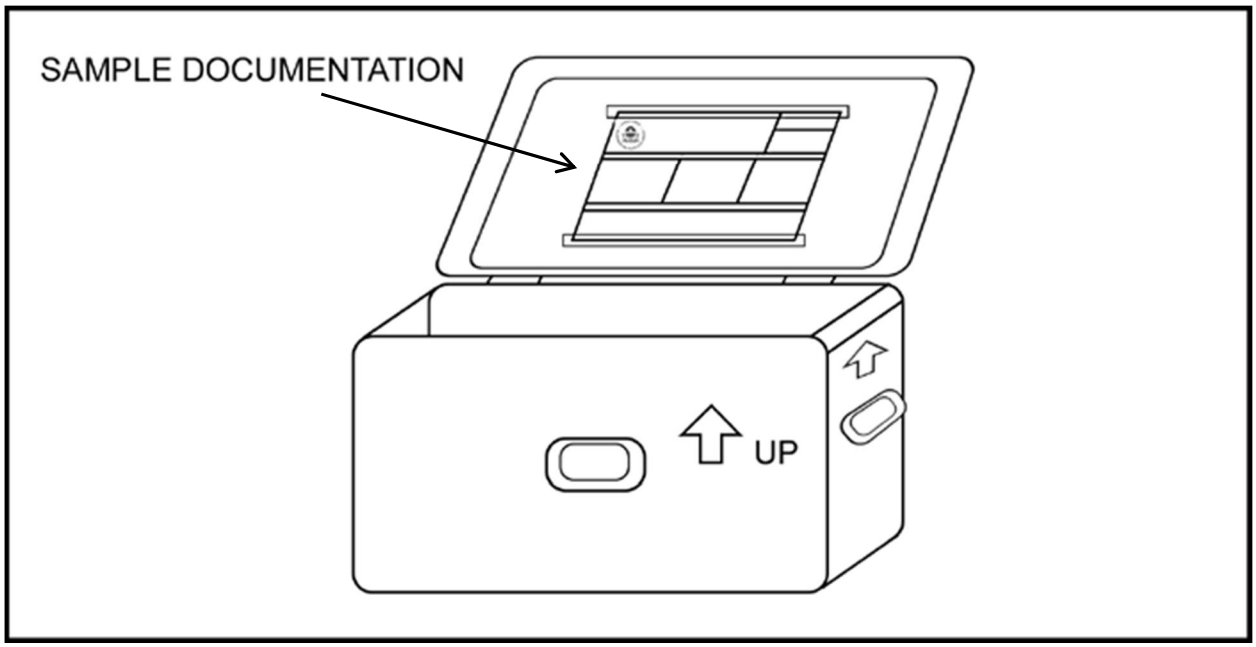

Source: U.S. Environmental Protection Agency. 2011.

FIGURE 4

EXAMPLE OF A CUSTODY SEAL

CUSTODY SEAL

Date _____

Signature _____

FIGURE 5

EXAMPLE OF SHIPPING COOLER WITH CUSTODY SEALS

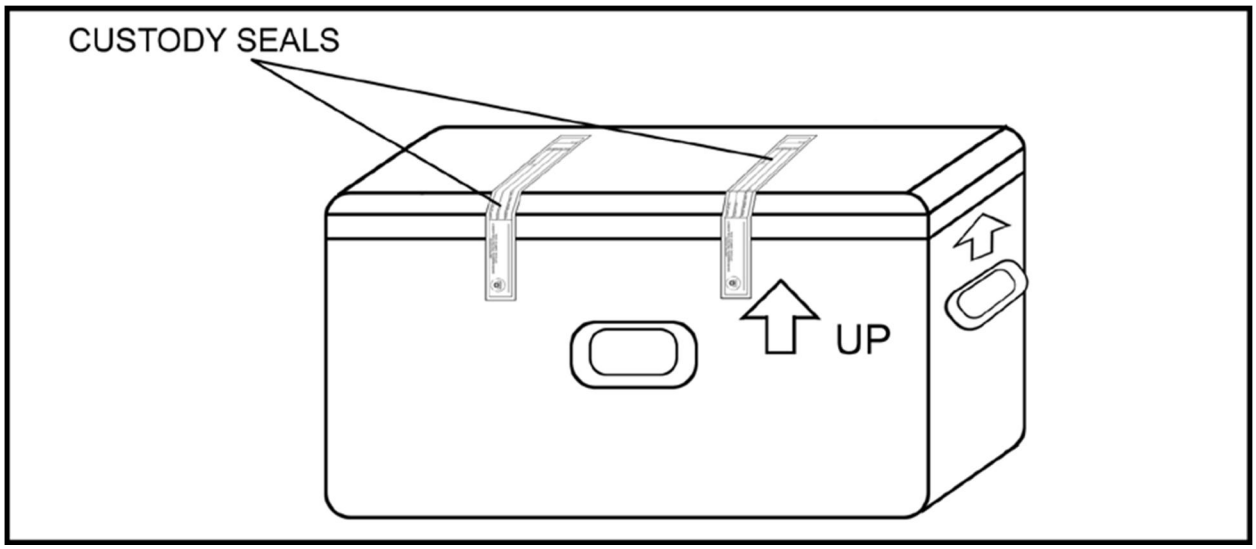

Source: U.S. Environmental Protection Agency. 2011.

Please note that the two seals typically are affixed *to opposite sides of the cooler and offset from each other*, although the offset is not depicted on the EPA figure above.

SOP APPROVAL FORM

TETRA TECH, INC.

ENVIRONMENTAL STANDARD OPERATING PROCEDURE

RECORDING NOTES IN FIELD LOGBOOKS

SOP NO. 024

REVISION NO. 2

Last Reviewed: November 2014

Carla J Burks

Quality Assurance Approved	November 24, 2014 Date

1.0 BACKGROUND

Complete and accurate field documentation is critical to a successful project and the field log book is an important tool to support field documentation needs. The field logbook should include detailed records of all field activities, document interviews with people, and record observations of conditions at a site. Entries should be described in a level of detail to allow personnel to reconstruct, after the fact, activities and events that occurred during their field assignments. Furthermore, entries should be limited to facts. Avoid speculation related to field events and do not record hearsay or unfounded information that may be presented by other parties during field activities. For example, do not record theories regarding the presence or absence of contamination when you are collecting field screening data or speculation regarding the reasons for a property owner's refusal to grant access for sampling.

Field logbooks are considered accountable documents in enforcement proceedings and may be subject to review. Therefore, the entries in the logbook must be accurate and detailed, but should not contain speculative information that could conflict with information presented in subsequent project deliverables and correspondence. Also be aware that the field logbooks for a site may be a primary source of information for depositions and other legal proceedings that may occur months or years after field work is complete and long after our memories have faded. The accuracy, neatness, and completeness of field logbooks are essential for recreating a meaningful account of events.

1.1 PURPOSE

The purpose of this standard operating procedure (SOP) is to provide guidance to ensure that field logbook documentation collected during field activities meets all requirements for its later use. Among other things, field logbooks may be used for:

- Identifying, locating, labeling, and tracking samples
- Recording site activities and the whereabouts of field personnel throughout the day
- Documenting any deviations from the project approach, work plans, quality assurance project plans, health and safety plans, sampling plans, and any changes in project personnel
- Recording arrival and departure times for field personnel each morning and evening and weather conditions each day
- Describing photographs taken during the project.

In addition, the data recorded in the field logbook may later assist in the interpretation of analytical results. A complete and accurate logbook also aids in maintaining quality control, because it can verify adherence to project scope and requirements.

1.2 SCOPE

This SOP establishes the general requirements and procedures for documenting site activities in the field logbook.

1.3 DEFINITIONS

None.

1.4 REFERENCES

Compton, R.R. 1985. *Geology in the Field*. John Wiley and Sons. New York, NY.

1.5 REQUIREMENTS AND RESOURCES

The following items are required for field notation:

- Field logbooks
- Ballpoint pens or Sharpies with permanent waterproof ink
- 6-inch ruler (optional)

Field logbooks should be bound (sewn) with water-resistant and acid-proof covers, and each page should have preprinted lines, numbered pages, and a single column. They should be approximately $7^1/_2$ by $4^1/_2$ inches or $8^1/_2$ by 11 inches in size. Loose-leaf sheets are not acceptable for use as field notes.* If notes are written on loose paper, they must be transcribed as soon as possible into a bound field logbook by the same person who recorded the notes originally. **Note: Data collection logs and field forms used to record field measurements and data are acceptable as loose-leaf sheets maintained in a three-ring binder with numbered pages.*

Ideally, distribution of logbooks should be controlled by a designated person in each office. This person assigns a document control number to each logbook, and records the assignment of each logbook distributed (name of person, date distributed, and project number). The purpose of this procedure is to ensure the integrity of the logbook before its use in the field, and to document each logbook assigned to a

project. In the event that more than one logbook is assigned to a project, this process will ensure that all logbooks are accounted for at project closeout.

2.0 PROCEDURES

The following subsections provide general guidelines and formatting requirements for field logbooks, and detailed procedures for completing field logbooks.

2.1 GENERAL GUIDELINES

- A separate field logbook must be maintained for each project. If a site consists of multiple subsites (or operable units), designate a separate field logbook for each subsite. Similarly, if multiple activities are occurring simultaneously requiring more than one task leader (well installation, private well sampling, or geophysical survey.), each task leader should maintain a separate field logbook to ensure that each activity is documented in sufficient detail.
- At larger sites, a general field log may be kept at the site trailer or designated field office to track site visitors, document daily safety meetings, and record overall site issues or occurrences.
- Data from multiple subsites may be entered into one logbook that contains only one type of information for special tasks, such as periodic well water-level measurements.
- All logbooks must be bound and contain consecutively numbered pages.
- No pages can be removed from the logbook for any purpose.
- All information must be entered using permanent, waterproof ink. Do not use pens with “wet ink,” because the ink may wash out if the paper gets wet. Pencils are not permissible for field notes because information can be erased. The entries should be written dark enough so that the logbook can be easily photocopied.
- Be sure that all entries are legible. Use print rather than cursive and keep the logbook pages free of dirt and moisture to the extent possible.
- Do not enter information in the logbook that is not related to the project. The language used in the logbook should be factual and objective. Avoid speculation that could conflict with information presented in subsequent project deliverables and correspondence (see Section 1.0 above).
- Use military time, unless otherwise specified by the client.
- Include site sketches, as appropriate.
- Begin a new page for each day’s notes.
- Include the date at the top of each page.
- At the end of a day, draw a single diagonal line through any unused lines on the page, and sign at the bottom of the page. Note and implement any client specific requirements (for example, some U.S. Environmental Protection Agency (EPA) programs require each logbook page to be signed).

- Write notes on every line of the logbook. Do not skip any pages or parts of pages unless a day's activity ends in the middle of a page.
- If a line is left blank for some reason, cross out (with a single line) and initial to prevent unauthorized entries.
- Cross out (with a single line) and initial any edits to the logbook entries. Edits should only be made if the initial entry is illegible or erroneous. Do not make corrections for grammar or style.

2.2 LOGBOOK FORMAT

The layout and organization of each field logbook should be consistent and generally follow the format guidelines presented below. Some clients or contracts may have specific formatting guidelines that differ somewhat from this SOP; review client requirements at the start of the project to help ensure any client-specific guidelines are integrated.

2.2.1 Logbook Cover

Write the following information on the front cover of each logbook using a Sharpie or similar type permanent ink marker:

- Logbook document control number (assigned by issuer)
- "Book # of #" (determined by the project manager if there is more than one logbook for the project)
- Contract and task order numbers
- Name of the site and site location (city and state)
- Name of subsite (or operable unit), if applicable
- Type of activity (if logbook is for specific activity, such as well installation or indoor air sampling)
- Beginning and ending dates of activities entered into the logbook

2.2.2 Inside Cover or First Page

Spaces are usually provided on the inside front cover (or the opening page in some logbooks) for the company name, address, contact names, and telephone numbers. If preprinted spaces for this information are not provided in the logbook, write the information on the first available page. Information to be included on the inside front cover or first page includes:

- Tetra Tech project manager and site manager and phone numbers
- Tetra Tech office address

- Client contact and phone number
- Site safety officer and phone number
- Emergency contact phone number (911, if applicable, or nearest hospital)
- Subcontractor contacts and phone numbers
- Site property owner or property manager contact information

2.3 ENTERING INFORMATION IN THE LOGBOOK

The following lists provide guidance on the type of information to be included in a typical field logbook. This guidance is general and is not intended to be all-inclusive. Certain projects or clients may specify logbook requirements that are beyond the elements presented in this SOP.

General Daily Entries:

- Document what time field personnel depart the Tetra Tech office and arrive at the hotel or site. If permitted by the client to charge travel time for site work, document what time personnel leave and arrive at the hotel each day. (This information may be needed at remote sites where hotel accommodations are not near the site.)
- Indicate when all subcontractors arrive and depart the site.
- Note weather conditions.
- Include the date at the top of each page.
- Document that a site safety meeting was held and include the basic contents of the meeting.
- List the level of protection to be used for health and safety.
- Summarize the day's planned activities.
- Summarize which activities each field team member will be doing.

Field Activity Entries:

- Refer to field data collection forms for details about field data collection activities (for example time, date, depth of samples, field measurements). If separate field sampling sheets are not used, see section below regarding logbook entries for sampling activities.
- Refer to well purge forms, well construction logs, and other activity-specific forms as applicable rather than including this type of information in the field logbook. These other forms allow the information to be more accessible at a later date.
- List any air monitoring instrumentation used, with readings and locations.
- Refer to instrument field logs for equipment calibration information.
- Summarize pertinent conversations with site visitors (agency representatives, property owners, client contacts, and local citizens).
- Summarize any problems or deviations from the quality assurance project plan (QAPP) or field sampling plan.
- Document the activities and whereabouts of each team member. (As indicated in Section 2.1, multiple logbooks may be required to ensure sufficient detail for contemporaneous activities).
- Indicate when utility clearances are completed, including which companies participated.
- Indicate when verbal access to a property is obtained.
- Include names, addresses, and phone numbers of any pertinent site contacts, property owners, and any other relevant personnel.
- Document when lunch breaks or other work stoppages occur.
- Include approximate scale for all diagrams. If a scale is not available, write “not to scale” on the diagram. Indicate the north direction on all maps and cross-sections, and label features on each diagram.

Sampling Activity Entries: The following information should typically be on a sample collection log and referenced in the log book. If the project does not use sample sheets as a result of project-specific requirements, this information should be included in the logbook.

- Location description
- Names of samplers
- Collection time
- Designation of sample as a grab or composite sample
- Type of sample (water, sediment, soil gas, or other medium)
- On-site measurement data (pH, temperature, and specific conductivity)

- Field observations (odors, colors, weather)
- Preliminary sample description
- Type of preservative used.
- Instrument readings, if applicable

Closing Daily Entries:

- Describe decontamination procedures (personnel and equipment).
- Describe handling and disposition of any investigation-derived wastes.
- Summarize which planned activities were completed and which ones were not.
- Note the times that personnel depart site for the day.
- Summarize any activities conducted after departing the site (paperwork, sample packaging, etc.). This may be required to document billable time incurred after field activities were completed for the day.

Photographic Log Entries:

- For digital photographs, indicate in the text that photographs were taken and the location where the photographs can be found (for example, in the project file).
- Camera and serial #
- Photographer
- Date and time of photograph
- Sequential number of the photograph and the film roll number or disposable camera used (if applicable)
- Direction of photograph
- Description of photograph

2.4 LOGBOOK STORAGE

Custody of logbooks must be maintained at all times. During field activities, field personnel must keep the logbooks in a secure place (locked car, trailer, or field office) when the logbook is not in personal possession. When the field work is over, the logbook should be included in the project file, which should be in a secured file cabinet. The logbook may be referenced in preparing subsequent reports and may also be scanned for inclusion as an appendix to a report. However, it is advisable to obtain direction directly from the client before including the logbook as a report appendix, because its inclusion may not be appropriate in all cases.

2.5 HEALTH AND SAFETY CONSIDERATIONS

In addition to the procedures outlined in this SOP, all field staff must be aware of and follow the health and safety practices that result from the Activity Hazard Analyses (AHAs) for a project. The AHAs include critical safety procedures, required controls, and minimum personal protective equipment (PPE) necessary to address potential hazards. The hazards specific to project tasks must be identified and controlled to the extent practicable and communicated to all project personnel via the approved, project-specific Health and Safety Plan (HASP).

SOP APPROVAL FORM

TETRA TECH EM INC.

LABORATORY ANALYTICAL DATA STANDARD OPERATING PROCEDURE

Laboratory Analytical Data Verification – Minimum Requirements

SOP NO. 203

REVISION NO. 00

Last Reviewed: August 2010

Quality Assurance Approved	August 24, 2010 Date

1.0 BACKGROUND

Data quality assurance (QA) is necessary for every project. It is the total integrated process for assuring reliability and defensibility of decisions based on data—including analytical data. In particular, appropriate level and accurate review of data resulting from chemical and physical analysis are essential to ensure these data are of sufficient quality to support the project's technical requirements.

1.1 PURPOSE

The purpose of this standard operating procedure (SOP) is to ensure laboratory data used by Tetra Tech to make project decisions are of the quality required and provide the level of confidence needed to make the appropriate project decisions. This SOP specifies data verification guidelines for ensuring achievement of a minimum level of project data QA.

1.2 SCOPE

Analytical data generated for Tetra Tech projects must receive the appropriate level of data review. The level of detail and stringency of data verification or data validation depends on the needs of the project and program. This SOP specifies guidance for data verification procedures when program-specific or regulatory requirements are not defined contractually or by program procedures and regulations (for example, Phase II Environmental Site Assessments, emissions monitoring, and compliance reporting data for permit applications).

1.3 DEFINITIONS

This subsection defines key terms used in the text.

Data package – A hard copy or electronic report from an analytical laboratory for a set of chemical and physical analyses performed on a group of samples (sometimes referred to as a Sample Delivery Group [SDG]). The data package should contain sufficient QA documentation to complete data verification and determine data usability.

Data usability – A qualitative decision process whereby a qualified person determines whether the data may be used for the intended purpose. Data should be classified into one of the following two categories: usable or rejected (unusable).

Data verification – The act of determining and documenting whether data conform to specified requirements. The determination may involve processes such as reviewing, inspecting, testing, checking, recalculating, and auditing.

Rejected data – Data that do not conform to some or all requirements considered critical to assuring and confirming the quality of the data. Nonconformances may include: (1) critical quality control (QC) criteria are not met (see Table 1); (2) appropriate methods were not followed or the methods used involved significant deviations that might impact data quality or meaning; and (3) critical documentation is missing or incomplete.

Sample delivery group – A unit (group) of samples received by the laboratory during a field sampling event. A "sample date group" (SDG) is typically comprised of 20 or fewer samples, and is grouped based on the number of samples and not the analytical testing requested. A SDG may be defined based on the number of samples received by the laboratory on a given day or over a period of up to 7 calendar days.

Qualified person – A chemist or other person who received training in or has demonstrated skills and knowledge of laboratory procedures and QC. The qualified person involved in data verification should understand the data generation procedures and know project documentation and data quality requirements.

Usable data – Data conforming to most or all requirements considered critical to assuring and confirming the quality of the data. Conformances important to achieve usability include: (1) critical QC criteria are met (see Table 1); (2) appropriate methods were followed, or only minor deviations to the methods were made that would not impact data quality or meaning; and (3) critical documentation is complete. Professional judgment by a qualified person should be used to determine data usability.

1.4 REFERENCES

U.S. Environmental Protection Agency (EPA). 2002. Guidance on Environmental Data Verification and Data Validation EPA, QA/G-8. EPA/240/R-02/004. November. On-line address: http://www.epa.gov/quality/qs-docs/g8-final.pdf

EPA. 2005. "USEPA Analytical Services Branch (ASB) National Functional Guidelines for Chlorinated Dibenzo-p-Dioxins (CDDs) and Chlorinated Dibenzofurans (CDFs) Data Review." September. On-line address: http://www.epa.gov/superfund/programs/clp/download/dlm/dlm2nfg.pdf

EPA. 2008. "USEPA Contract Laboratory Program National Functional Guidelines for Superfund Organic Methods Data Review." June. On-line address: http://www.epa.gov/superfund/programs/clp/download/somnfg.pdf

EPA. 2009. "USEPA Guidance for Labeling Externally Validated Laboratory Analytical Data for Superfund Use." January. On-line address: http://www.epa.gov/superfund/policy/pdfs/EPA-540-R-08-005.pdf.

EPA. 2010. "USEPA Contract Laboratory Program National Functional Guidelines for Inorganic Data Review." January. On-line address: http://www.epa.gov/superfund/programs/clp/download/ism/ism1nfg.pdf

1.5 REQUIREMENTS AND RESOURCES

The following are required for laboratory data verification as described in this SOP:

- Laboratory data package(s)
- Project-specific information for data use (i.e. work plan, sampling and analysis plan [SAP], quality assurance project plan [QAPP], proposal, or purchase order)
- Qualified person, familiar with laboratory procedures and capable of determining data usability.

Laboratory data package(s) should include the following to allow for data verification:

- Cover letter or case narrative, including the laboratory name and address, that certifies analytical results via signature of the project chemist, QA manager, or laboratory manager
- Signed field chain-of-custody form(s)
- Sample receipt and log-in forms, which include general comments and specify temperature, holding time, bottle breakages, and any nonconformances or discrepancies
- Laboratory log-in summary, including laboratory sample identification (ID), field sample ID, list of analyses performed, and analytical methods employed
- Analytical results
- Applicable analytical batch QC results (for example, method and field blanks, surrogate spikes, matrix spike/matrix spike duplicates [MS/MSD], and laboratory control sample/laboratory control sample duplicates [LCS/LCSD])
- List of laboratory data qualifier definitions.

Time required for laboratory data verification can vary greatly depending on the number of analyses per data package and the number of samples per data package. The following rules of thumb, including producing a record of the type found in Attachment A, may be useful for planning purposes:

- 30 minutes for a SDG with one major analysis (e.g., metals or volatiles)
- 90 minutes to 2 hours for a SDG with a common suite of analyses (e.g., metals, volatiles, semivolatiles, pesticides, polychlorinated biphenyls, and total petroleum hydrocarbons)
- 30 minutes for a SDG with a common suite of wet chemistry analyses (e.g., alkalinity, pH, major anions, total organic carbon, total dissolved solids, and total suspended solids).

The times noted are estimates only. Involving a qualified person in the planning process will help ensure proper budget for data verification.

2.0 PROCEDURES

Step 1 – The project manager identifies a qualified person with an understanding of laboratory data generation and usability to review and verify the data. If the data are released to the client prior to verification, the client should be advised that the data are preliminary pending this review.

Step 2 – The qualified person identifies the project analytical QA/QC needs for documentation and technical specifications as these apply to data content and quality. A work plan, SAP, QAPP, regulatory guidance, laboratory analytical method, client contract, or project scope of work may identify the technical specifications and QA/QC requirements.

Step 3 – The qualified person reviews the data and documents the review findings based on the requirements for data quality needed to achieve project objectives. Serious issues regarding data usability are immediately brought to the project manager's attention for further discussion and resolution. Table 1 describes the elements of data verification.

In all cases, the laboratory chain-of-custody indicating sample IDs, matrices, and analytical methods—and perhaps frequency of collection and submittal of QA/QC samples (i.e., field duplicates, trip blanks, field blanks, equipment rinsate blanks, and MS/MSDs)—should be cross-checked with the SAP or the contracted scope of work.

In each case, professional judgment should be used to determine data usability. Ultimately, the project manager's responsibility is to ensure a qualified person has reviewed the laboratory data package, and has deemed the data usable for the data's intended purpose.

Step 4 – The qualified person reviews and compares the analytical method detection limits (MDL), reporting limits (RL), and practical quantitation limits (PQL) for compliance with project requirements. Explicit definition and clarification of MDLs, RLs, and PQLs should be established prior to field activities.

Step 5 – The qualified person communicates findings. The deliverable from the qualified person includes at least one of the following:

- An e-mail indicating data usability
- A memo summarizing the evaluated results
- A table of data showing data points considered biased or outside acceptance criteria for various data quality indicators by a large enough factor that use of the data might affect environmental decisions.

Some written form of communication should be provided for the project file. An example of a minimum data verification deliverable is included as Attachment A.

3.0 DATA VERIFICATION RESULTS

As described above, potential data verification issues involving the following designations may be encountered during this process:

Rejected data – During verification, the qualified person may reject some or all of the data (consider the data unusable). If laboratory data are rejected due to poor quality, the project manager may ask the laboratory to re-analyze the extracts, or re-digest and/or re-extract the original sample if enough volume remains.

Inadequate data – The qualified person may find the data inadequate for the intended purpose, even if all QC criteria were met—for example, a case in which laboratory reporting limits are not adequate to meet the comparison or screening values established during the project planning process.

Incomplete data packages – The data package provided by the laboratory may not be complete. If the laboratory data package does not include the minimum contents defined in Section 1.5, the laboratory should be notified and required to issue a revised data package.

If encountered, any of the above data designations should be addressed immediately and corrected to minimize effects on future project deliverables. Further discussion with the analytical laboratory may help in the effort to address each of the above designations. The data verifier and the project manager should discuss potential remedies or corrective measures to minimize impact(s) of the above designations on project analytical data and decisions based on those data.

Table 1
Elements of Laboratory Data Verification

Data Report Element	Minimum Required Review	Actions
Chain-of-custody	Review laboratory log-in forms against chain-of-custody forms and the contracted scope of work (SAP) for: accuracy and completeness of documentation, sample quantity and IDs, proper signatures attesting to chain-of-custody, sample condition upon receipt (breakage, temperature, etc.), sample preservation (see below), and analytical method selection.	Discrepancies regarding log-in, chain-of-custody, analytical method selection, or related issues should be immediately addressed. If discrepancies are identified, the laboratory should be contacted immediately and corrective actions implemented. Improper sample handling and preservation should be investigated to determine sample adequacy (see below).
Data package completeness	Review data package to make sure that all requested analytical procedures have occurred and required corresponding data are reported.	Analytical results that lack supporting data and information may be considered invalid and not usable for the purpose intended. Such conditions should be immediately addressed with the project team and laboratory.
Sample preservation, storage, and holding times	Review sample preservation, storage, and holding times in compliance with selected analytical method and matrix.	Analytical results of samples not properly preserved and stored, or digested/extracted or analyzed outside the appropriate holding time, may be considered invalid and not usable for the purpose intended. Such conditions should be immediately addressed with the project team.
Method and field blanks	Review blank data for positive results that may indicate possible field or laboratory contamination.	If blank contamination is found in either the laboratory method blanks or the field QC blanks (i.e., equipment rinsate blanks, source or field blanks, or trip blanks), associated sample results should be reviewed. Detections in the associated environmental samples may be attributed to laboratory or field contamination, and qualifications of the data may be necessary.
Precision and accuracy* (may include surrogate spikes, MS/MSDs, and LCS/LCSDs)	Review QC data summaries for the analytical method used. Use project-required, method-required, or laboratory-provided control limits. Review laboratory-assigned data quality flags and notations, and revise if necessary.	In general, recoveries and relative percent difference values for surrogate spikes, MS/MSDs, and LCS/LCSDs that fall outside of the specified control limits may indicate problems with the laboratory analysis.*

Notes:

* The type and amount of QC information available for review will depend upon the analytical method and level of data package requested.

ID Identification
LCS/LCSD Laboratory control sample/laboratory control sample duplicate
MS/MSD Matrix spike/matrix spike duplicate
QC Quality control
SAP Sampling and analysis plan

ATTACHMENT A
EXAMPLE DATA VERIFICATION REPORT

Prepared by: _____

Date: _____

Site Name/Job Number: _____

Laboratory: _____

Data Package or SDG Number: _____

Sample Designations/Names (ID): _____

Matrices: _____

Analytical Parameters: _____

Data Package Element	Usable	Rejected	NA	Description of Affected Data (note specific samples and analytical parameters affected)
Chain of custody	__	__		
Data package completeness	__	__		
Sample preservation, storage, and holding times				
Method and field blank contamination				
Surrogate spikes				
Matrix Spikes/Matrix Spike Duplicates (MS/MSD)				
Laboratory Control Samples/Laboratory Control Sample Duplicates (LCS/LCSD)				
Other				
Summary				