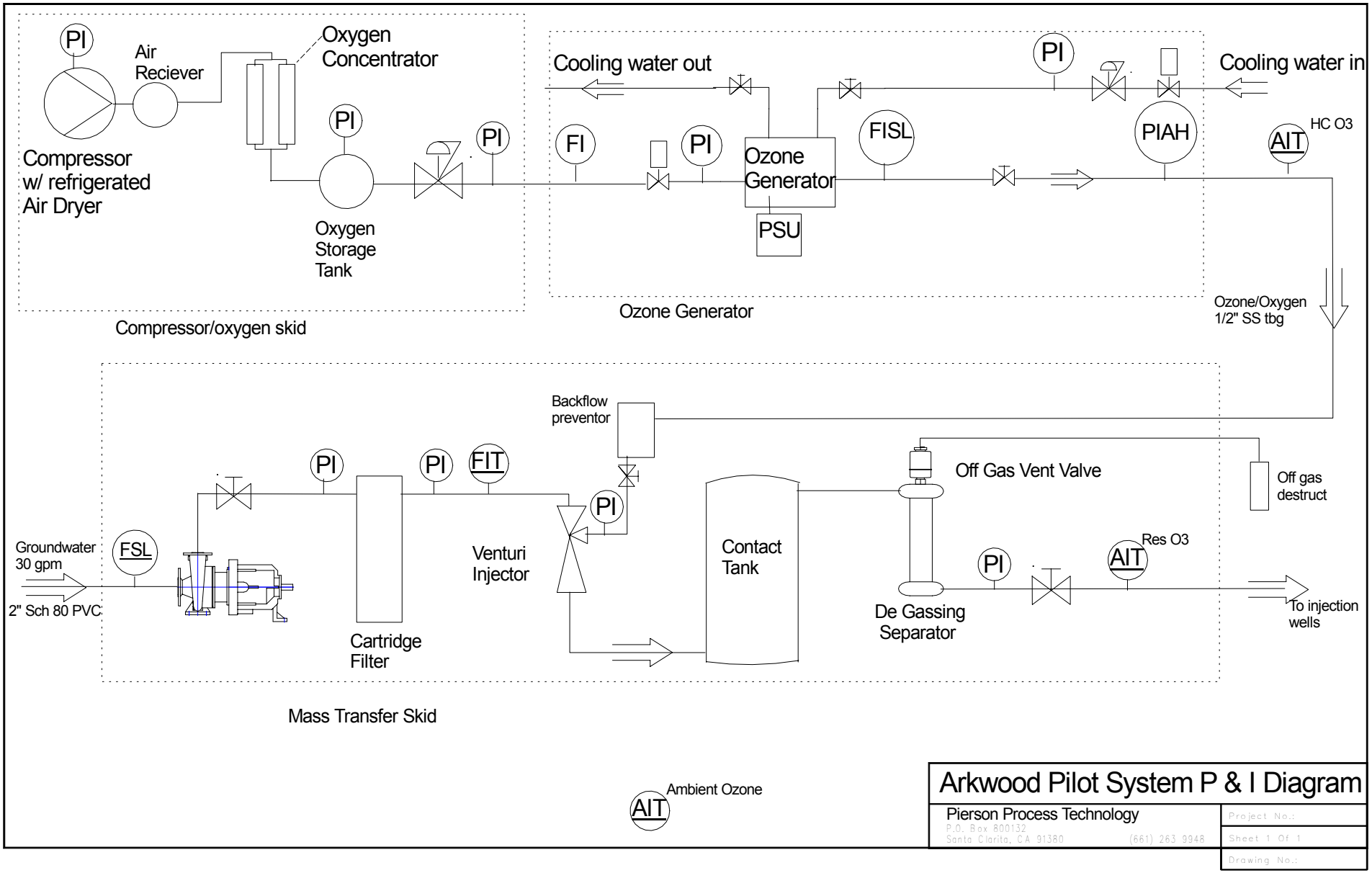
PI
Air Reciever
Oxygen Concentrator
Compressor w/ refrigerated Air Dryer
PI
PI
Oxygen Storage Tank
Compressor/oxygen skid
Cooling water out
PI
Cooling water in
FI
PI
Ozone Generator
FISL
PIAH
AIT
HC O3
PSU
Ozone Generator
Ozone/Oxygen 1/2" SS tbg
Backflow preventor
PI
PI
FIT
PI
Off Gas Vent Valve
Off gas destruct
Groundwater 30 gpm
FSL
2" Sch 80 PVC
Venturi Injector
Contact Tank
PI
AIT
Res O3
De Gassing Separator
To injection wells
Cartridge Filter
Mass Transfer Skid
AIT
Ambient Ozone
Arkwood Pilot System P & I Diagram
Pierson Process Technology
P.O. Box 800132
Santa Clarita, CA 91380
(661) 263 9948
Project No.:
Sheet 1 Of 1
Drawing No.:

9341543