US EPA RECORDS CENTER REGION 5
513863
931270

Rev 0
+ Rev 1 Revised
Pages Inserted

SAMPLING PLAN
FOR
REILLY TAR & CHEMICAL CORP.
N.P.L. SITE
ST. LOUIS PARK, MINNESOTA

SUBMITTED OCTOBER, 1988

CITY

ENSR ——— RMAL

SITE MANAGEMENT PLAN

QUALITY ASSURANCE BRANCH

NOV 15 1988

ENVIRONMENT SERVICES DIVISION

INTRODUCTION

Ground water in the City of St. Louis Park, Minnesota has been contaminated by activities at a coal-tar distillation and wood preserving plant operated from 1917 to 1972. Numerous previous studies have identified polynuclear aromatic hydrocarbons (PAH) present in various aquifers beneath St. Louis Park and adjacent communities.

The United States Environmental Protection Agency (EPA), the Minnesota Pollution Control Agency (MPCA), the Minnesota Department of Health (MDH), the City of St. Louis Park (SLP), and Reilly Tar & Chemical Corporation (Reilly) have agreed to acceptable water quality criteria for PAH. These criteria, as incorporated into a Consent Decree, include the following concentration levels:

	Advisory Level	Drinking Water Criteria
o Sum of benzo(a) pyrene and dibenz(a,h) anthracene	3.0 ng/l*	5.6 ng/l
o Carcinogenic PAH	15 ng/l	28 ng/l
o Other PAH	175 ng/l	280 ng/l

* or the lowest concentration that can be quantified, whichever is greater

In conjunction with the implementation of remedial measures to limit the spread of contaminants, a granular activated carbon (GAC) treatment system has been installed to treat water from St. Louis Park (SLP) wells 10 and 15. Further provisions of a Remedial Action Plan (RAP) call for long-term monitoring of the influent and effluent of the GAC treatment plant and the major aquifers underlying the region. The general objective of the monitoring program is to identify the distribution of PAH and/or phenolics in the groundwater. The analytical data will be used to evaluate contamination by comparing the levels of PAH and/or phenolics found in the various samples with historical water quality data and with water quality criteria established in the Consent Decree-RAP. The specific objectives of the sampling and analysis program, and therefore, the intended end use of the data vary slightly for the different aquifers being monitored in accordance with the Consent Decree-RAP.

The GAC plant monitoring is being done to assess and continuously evaluate the performance of the treatment system. Analytical results for influent and effluent samples will be compared to the drinking water criteria for PAH as established in the Consent Decree-RAP. Based on these comparisons, decisions will be made on: 1) system operations (e.g., when the carbon should be replaced), and 2) cessation of the treatment system, if desired, when sufficiently low concentrations of PAH in influent samples are demonstrated.

The objective of sampling the four existing Mt. Simon-Hinckley Aquifer municipal drinking water wells and any new Mt. Simon-Hinckley Aquifer municipal drinking water wells installed within one mile of well W23, and analyzing for PAH, is to assure the continued protection of these wells from PAH resulting from activities of Reilly at the site. The analytical data will be used to make comparisons between the levels of PAH found in the Mt. Simon-Hinckley Aquifer, and the drinking water criteria established in the Consent Decree-RAP.

The objective of sampling and analyzing the Ironton-Galesville Aquifer source control well (W105) is to assess the levels of PAH in the discharge from W105 when it is pumping a monthly average of 25 gallons per minute. The data will be used to compare the concentration of total PAH in the samples to a cessation criterion of 10 micrograms per liter of total PAH established in the Consent Decree-RAP. Also, if any new Ironton-Galesville Aquifer drinking water wells are installed within one mile of well W23, then those wells will be sampled and analyzed for PAH to meet the objective of assuring protection of the well from PAH resulting from the activities of Reilly at the site. The analytical data will be used to compare the levels of PAH found in potential Ironton-Galesville Aquifer drinking water wells to the drinking water criteria established in the Consent Decree-RAP.

The objectives of monitoring the many Prairie du Chien-Jordan Aquifer wells, including municipal drinking wells, private or industrial wells, and monitoring wells are to: 1) monitor the distribution of PAH in the aquifer, thus evaluating the source and gradient control systems, and 2) assure the continued protection of drinking water wells from PAH resulting from the activities of Reilly at the site. The analytical data will be used to compare the levels of PAH in the Prairie du Chien-Jordan Aquifer to historical PAH data and to various criteria established in the Consent Decree-RAP (e.g., drinking water criteria for drinking water wells, and a cessation criterion of 10 micrograms per liter of total PAH for source control well W23). Analytical data for samples of the discharge from gradient control well SLP4 will be compared to discharge limitations in an NPDES permit that has been applied for and which proposes that the discharge be directed to a surface water receptor. Water level data will be used to evaluate ground water flow patterns in the Prairie du Chien-Jordan Aquifer.

The objective of monitoring St. Peter Aquifer wells will be to determine the nature and extent of PAH in the St. Peter Aquifer resulting from the activities of Reilly at the site. The analytical data will be used to compare the levels of PAH in the St. Peter Aquifer to historical PAH data and to the drinking water criteria established in the Consent Decree-RAP. Water level data will be used to evaluate ground water flow patterns in the St. Peter Aquifer.

The objectives of monitoring the Drift-Platteville Aquifer wells are to: 1) monitor the distribution of PAH and phenolics in the aquifer, thus evaluating the source and gradient control systems, and 2) further define the nature and extend of PAH and phenolics in the Northern Area of the Drift-Platteville Aquifer resulting from the activities of Reilly at the site. The analytical data will be used to compare levels of PAH and phenolics in the Drift-Platteville Aquifer with historical water quality data for the aquifer and with various criteria established in the Consent Decree-RAP for PAH and phenolics. Water level data will be used to evaluate ground water flow patterns in the Drift-Platteville Aquifer.

The Site Management Plan outlines the scope of work to be performed in order to monitor the ground water in the St. Louis Park, Minnesota area in accordance with the Consent Decree-RAP related to the Reilly Tar & Chemical Corporation N.P.L. site. Included in this plan are: 1) the identity of wells to be monitored, 2) the schedule for ground water monitoring, and 3) a description of the procedures that will be used for sample collection, water level measurement, sample handling, sample analysis, and reporting.

The time period covered by this Plan is from January 1, 1989, or the date of its acceptance and approval by the agencies if said acceptance/approval is not granted by January 1, to December 31, 1989. The next subsequent Sampling Plan (RAP section 3.3) will be submitted by October 31, 1989 covering the 1990 calendar year.

This Plan incorporates the requirements of RAP Sections 3.2, 3.3, 4.3, 5.1, 6.1.4, 7.3, 8.1.3, 9.1.3, 9.2.3, 9.3.3, and 9.6. Some of the monitoring required under these RAP Sections has already taken place in accordance with the Initial Sampling Plan, which was approved by the Agencies on June 22, 1988.

MONITORING SCHEDULE

The monitoring schedule outlined in this Plan indicates the starting criteria and the frequencies of monitoring as outlined in the RAP to determine when the wells are monitored (Tables 1 and 2). In general, the monitoring schedule will allow economies of scale in the field and in the laboratory by grouping the various monitoring events described by the RAP as much as possible. Samples will be collected within the time periods indicated on Tables 1 and 2, and all parties will be given two weeks notice in advance of routine sampling.

Tables 1 and 2 summarize the ground water monitoring schedule for the period through December 1989, and represent the minimum monitoring program that is likely to occur during the year. However, additional monitoring will take place if treated water from the GAC plant or ground water from active municipal drinking water wells exceeds the drinking water criteria established in the Consent Decree-RAP. This additional monitoring is described in Sections 4 and 12 of the RAP, and are reproduced in Appendix A of this Site Management Plan.

The duration of field sampling events will depend on the number and type of wells to be monitored. For estimating purposes, it is assumed that between 10 and 20 active pumping wells (e.g., municipal, industrial, or gradient/source control wells), or between 4 and 8 monitoring wells can be sampled in one day. It is a reasonable expectation that most sampling will take place over the better part of a week, and some sampling may be done over a longer time frame.

TABLE 1

SAMPLING PLAN GAC PLANT MONITORING SCHEDULE [a]

RAP Section	Sampling Points	Start of Monitoring	Sampling Frequency	Analyses[b]
4.3.1(C)	Treated water (TRTD)	Date of plan approval	Quarterly	PAH(ppt)[c]
4.3.3(C)	Feed water (FEED)	Date of plan approval	Annually	PAH(ppt)
4.3.4	Treated water	Date of plan approval	Annually	Extended PAH(ppt)
4.3.4	Treated or Feed water	Date of plan approval	Annually	Acid fraction compounds in EPA Test Method 625.

(a) This schedule does not include certain contingencies (e.g. exceedance monitoring) and, therefore, represents the minimum program that is likely to occur between the date this Plan is approved and December 31, 1989. Sections 4 and 12 of the RAP outline the additional monitoring that will be conducted if PAH criteria are exceeded. The first samples will be collected during the period indicated by the monitoring frequency following the date of the start of monitoring. The location of the GAC plant is shown in Figure 1.

(b) Lists of parameters and methods for analysis of PAH, extended PAH, and acid fraction compounds in EPA Test Method 625 are provided in the QAPP. Field blanks will be collected and analyzed at a frequency of one per day. Duplicate samples will be collected and analyzed at a frequency of one per 10 samples.

(c) ppt = parts per trillion. This signifies analysis using selected ion monitoring gas chromatography mass spectrometry.

TABLE 2
SAMPLING PLAN GROUND WATER MONITORING SCHEDULE [a]

Source of Water	RAP Section	Sampling[j] Points	Start of Monitoring	Sampling Frequency	Analyses[b]
Mt. Simon-Hinckley Aquifer	5.1	SLP11,SLP12, SLP13,SLP17	Date of plan approval	Annually	PAH(ppt)[c]
	5.3.2	New municipal wells within one mile of well W23	At the time of installation	Annually	PAH(ppt)
Ironton-Galesville Aquifer	6.1.4	W105 W38[e]	Date of plan approval	Semi-annually	PAH(ppb)[d]
	6.2.1	New municipal wells within one mile of well W23	At the time of installation	Annually	PAH(ppt)
Prairie du Chien-Jordan Aquifer	7.3(A)	SLP4	Start of pumping	Quarterly	PAH(ppt) phenolics
	7.3(B)	W23	Date of plan approval	Semi-annually	PAH(ppb)
	7.3(C)	SLP6,SLP7 or SLP9,W48	Date of plan approval	Quarterly	PAH(ppt)
	7.3(D)[k]	AHM or MGC[g] E2,E13,H3, SLP10 or SLP15, SLP14,SLP16,W402[h] W403,W119	Date of plan approval	Semi-annually	PAH(ppt)
	7.3(E)[k]	SLP5,H6,E3, E15,MTK6, W29,W40, W70,W401	Date of plan approval	Annually	PAH(ppt)
	7.3(F)	W112,W32, SLP8,SLP10, E4,E7	Date of plan approval	Quarterly	No Chemical analyses[f]
St. Peter Aquifer	8.1.3	SLP3 plus six additional monitoring wells[i]	Date of plan approval	Annually	PAH(ppt)

TABLE 2 (continued)

Source of Water	RAP Section	Sampling[j] Points	Start of Monitoring	Sampling Frequency	Analyses[b]
Drift-Platteville Aquifer	9.1.3 and 9.2.3	W420,W421, W422	Date of plan approval	Quarterly	PAH(ppb) and total phenols
	9.6	Drift:W2,W6 W10,W11,W12, W116,W117, W128,W135,W136 W423,W425,W427, P109,P112, Platteville: W1,W18,W19,W20, W27,W101, W120,W121, W124,W130, W131, W143,W424,W426, W428	Date of plan approval	Annually[i]	PAH(ppb) and total phenols

(a) This schedule does not include certain contingencies (e.g. exceedance monitoring) and, therefore, represents the minimum program that is likely to occur between the date this Plan is approved and December 31, 1989. Section 12 of the RAP outlines the additional sampling that will be conducted if the drinking water criteria are exceeded in samples from water supply wells. The first samples will be collected during the period indicated by the monitoring frequency following the date of the start of monitoring. Field blanks will be collected at a frequency of one per day, and one duplicate sample will be collected for every 10 samples.

(b) Lists of parameters and descriptions of the methods for analysis of PAH, phenolics, and expanded analyses are provided in the QAPP. Water levels will be measured each time samples are collected for analysis, except for those wells which prove to be inaccessible for such measurements.

(c) ppt = parts per trillion. This signifies analysis using selected ion monitoring gas chromatography mass spectrometry.

(d) ppb = parts per billion. This signifies analysis by EPA Method 625. If analytical results for individual wells are below 20 micrograms per liter (20 ppb) using this method, then the part per trillion method will be used on subsequent monitoring rounds.

(e) Water levels in W38 will be measured each time W105 is sampled.

TABLE 2 (continued)

(f) Water levels only (no monitoring) will be measured at these wells, except for those wells which prove to be inaccessible for such measurements.

(g) AHM = American Hardware Mutual, MGC = Minikahda Golf Course.

(h) Well W402 may or may not be available for sampling at the same time as the other wells on these lists. It will be sampled in conjunction with the monitoring performed in accordance with the schedule shown, once it has been constructed.

(i) If any of the wells listed here become damaged, destroyed, or otherwise unsuitable for sampling, alternate wells will be selected by the Project Leaders for monitoring.

(j) Sampling points are located on the maps shown in Figures 1 through 5. Letter prefixes to well codes are defined as follows:

W - 4-inch monitoring well

P - monitoring piezometer

SLP - St. Louis Park supply well

E - Edina supply well

H - Hopkins supply well

MTK - Minnetonka supply well

(k) Water level measurements will be made quarterly at these wells, except for those wells which prove to be inaccessible for such measurements.

(l) The six St. Peter Aquifer monitoring wells that will be monitored according to RAP Section 8.1.3 will be selected by the Project Leaders based on the results of the first and second monitoring rounds of 1988.

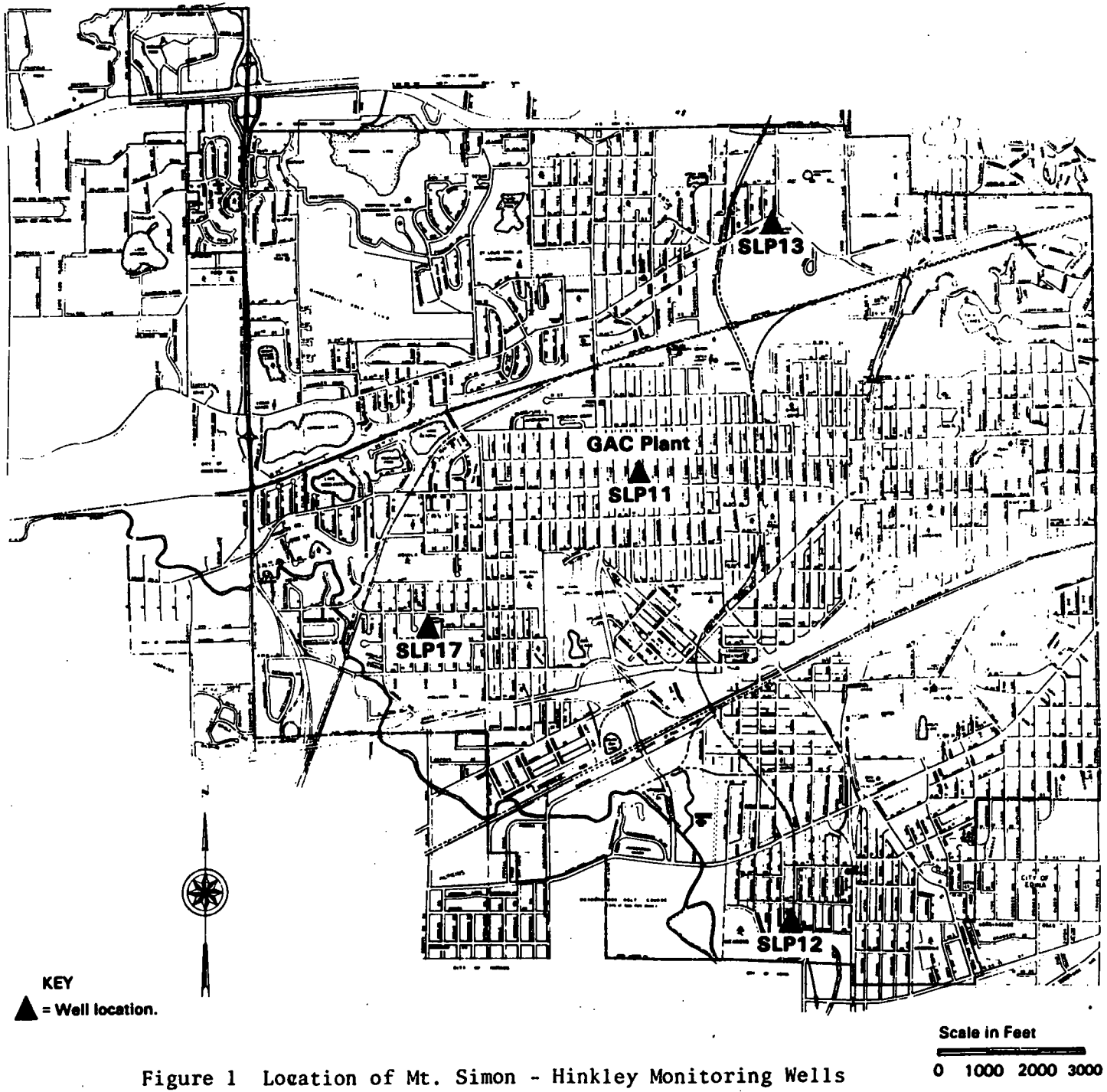

Figure 1 Location of Mt. Simon - Hinkley Monitoring Wells and St. Louis Park GAC Water-treatment Plant

NON-RESPONSIVE

Figure 2 Location of Praire du Chien-Jordan Aquifer Wells

NON-
RESPONSIVE

Figure 3 Location of Source and Gradient Control Wells

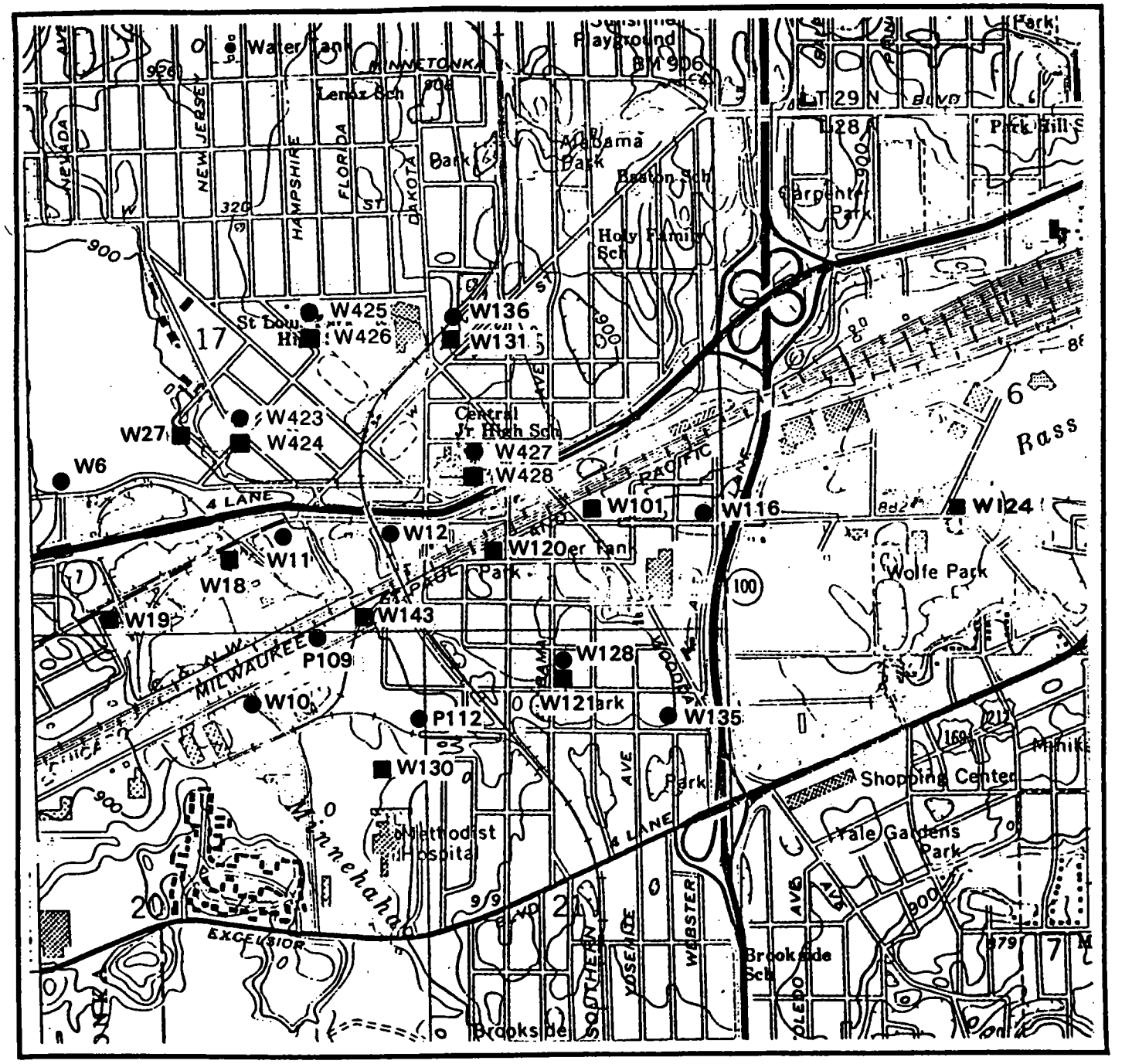

Figure 4 Location of Drift-Platteville Monitoring Wells

Reference: MGS, Miscellaneous Map Series,
M-57, Plate 1 of 2, Bedrock Geology,

NON-RESPONSIVE

EXPLANATION

▲W33 LOCATION AND PROJECT WELL NUMBER

▲ OBSERVATION WELL COMPLETED IN ST. PETER AQUIFER

■ OBSERVATION WELL COMPLETED IN BASAL ST. PETER CONFINING BED

● ST. PETER MONITORING WELLS CONSTRUCTED IN 1987

◉ WELL IN WHICH WATER LEVELS WERE MONITORED WITH A DIGITAL RECORDER DURING PART OF 1978-81

BEDROCK VALLEY/CONTACT WHERE UNCONSOLIDATED DRIFT DEPOSITS OVERLIE ST. PETER SANDSTONE

Figure 5 Existing St. Peter Aquifer Well Locations and Bedrock Valley

GROUND WATER SAMPLING PROCEDURES

An important distinction is made between the sampling procedures for active pumping wells (e.g. municipal wells) and for non-pumping monitoring wells. Active pumping wells are used on a regular basis, have dedicated pumps and associated plumbing, and have sample taps for collecting samples. Non-pumping monitoring wells may be new, or may have not been pumped for several years, and most require pumping and associated equipment for sampling. Another distinction is that the active pumping monitoring wells are typically located inside buildings whereas monitoring wells are not.

With these considerations in mind, this Plan has been developed so that the ground water monitoring program in each aquifer meets the requirements and intent of the RAP. Ground water monitoring will be conducted in accordance with the procedures given in the Quality Assurance Project Plan (QAPP), and with "Procedures for Ground Water Monitoring: Minnesota Pollution Control Agency Guidelines", April 1985.

Water Level Measurements

Water level measurements will be made using electric tapes or weighted steel tapes. Steel tapes will be used whenever possible because of their generally greater precision compared to electric tapes. Water level measurements using steel tapes will be made by suspending a known length of tape in the well so that the bottom end of the tape is below the water level. The lower portion of tape will be coated with blue chalk that exhibits a noticeable color change when wetted. The water level measurement will be obtained by subtracting the length of wetted tape from the total length of tape suspended below the measuring point of each well.

If reliable water marks on chalked portions of steel tapes can not be discerned because of water on the inside of the well casing or pump discharge pipe, then an electric tape will be used for water level measurements. Using the electric tape, the probe at the end of the tape will be lowered slowly in the well until contact with the water is made. Because of surface tension, readings of the water level made when the probe enters the water will differ from readings made when the probe leaves the water, thus breaking surface tension. To standardize these measurements, the second reading will always be used (i.e., the reading made when the probe leaves the water).

Water level measurement made for the purpose of defining ground water flow patterns in a particular aquifer will be performed independently from ground-water sampling, as a discrete event (probably lasting one or two days). The wells will be revisited for sampling, and measurements to determine the volume of water in the well will be made at that time.

Sample Collection at Active Pumping Wells

At active pumping wells the sampling team will first determine that the wells have actually been pumping during the period preceding sampling. This information may be derived from inspecting flow recorders or from interviewing knowledgeable persons regarding the wells (water department employees, well owners, etc.). The information will be documented in the field notes of the sampling team.

Water level measurements will then be made, if practical. The normal operation of the well will not be interrupted for the purpose of measuring water levels. An electric tape will be used to measure water levels in pumping wells. Sampling will proceed by filling the required containers with water from the sampling tap as near to the well head as possible, and before any holding tanks or treatment is encountered. The only exception to this is the GAC plant monitoring under RAP Section 4.3 which includes treated-water monitoring.

If it can not be determined that a well has been pumping at some time during the 24 hour period preceding sampling, or if it is known the well was not pumping, then the well shall be purged until field measurements of temperature, pH, and specific conductance have stabilized after at least three well volumes have been removed from the well. These measurements, water levels, and the amount of water pumped will be recorded in the field notes.

Sample Collection at Monitoring Wells and Piezometers

Because unanticipated or changed conditions may cause difficulty in the purging and sampling of the monitoring wells and piezometers, flexibility in the approach to sample retrieval is necessary. This Plan proposes that the sampling team be given latitude in the selection of purge/sample equipment and procedures necessary to compete the monitoring task.

Table 2 specifies the monitoring of Prairie du Chien-Jordan Aquifer monitor well W70 which is equipped with an operable dedicated submersible pump. Well purging and sample retrieval tasks will be completed with the aid of the pump in conformance with parameter monitoring established herein.

Monitoring wells and piezometers not equipped with dedicated submersible pumps will be purged using a nondedicated submersible pump, suction pump or bailer. During the purging of each well, temperature, pH, and specific conductance of the purge water will be monitored using a Hydrolab water quality monitor (or equivalent). Readings will be taken once per well volume. Stabilization of these readings will indicate that purging is complete and sampling may commence. Upon completion of well purging, samples will be collected from each well using a stainless steel or teflon bailer and a new length of nylon or polyester rope.

Samples will be collected by filling each of the appropriate sample containers in rapid succession, without prerinsing the containers with sample. The bottle will be held under the sample stream without allowing the mouth of the bottle to come in contact with the bailer and filled completely, and the cap securely tightened. Bottles will be checked for air and if air is visible, the cap removed and more sample added. All sample labels will be checked for completeness, sample custody forms completed and a description of the sampling event recorded in the field notebook.

The discharge from purging monitoring wells will be handled in accordance with the Contingency Plan (Appendix B). In general, if a visible sheen can be seen on the water surface, the discharge will be routed to the sanitary sewer. Otherwise, the storm sewer or surface water discharge will be used. Non-dedicated ground water sampling or monitoring equipment that comes in contact with the ground water will be decontaminated between uses, as described in the QAPP.

ANALYTICAL PROGRAM

Tables 1 and 2 show the ground water monitoring summary as prescribed in the RAP. Indicated on the tables are the analyses required. Expanded analyses including some priority and conventional pollutants may also be required according to RAP Section 9.3.3. Details of all analytical methodology can be found in the QAPP and it's appendices. All analyses will be performed at the Rocky Mountain Analytical Laboratory's (RMAL) Arvada, Colorado analytic facility. RMAL has agreed to provide a turnaround time of 30 working days from the receipt of samples to the submittal of analytical reports. The laboratory will notify the City of St. Louis Park if it can not meet this turnaround time.

Ground water monitoring will include two methods of PAH analyses depending upon the anticipated PAH concentration levels. Low level (nanograms per liter or part per trillion) PAH analyses will be performed utilizing selected ion monitoring (SIM) gas chromatography mass spectrometry (GC/MS). This method will be used to analyze samples from drinking water wells and from other wells for which the RAP requires drinking water criteria to be enforced (e.g., St. Peter Aquifer monitoring wells). Non-criteria level (micrograms per liter or part per billion) PAH analyses, using the Scanning GC/MS Method, will be performed on samples from wells that have historically contained elevated PAH concentrations (e.g., part per million levels in well W23), and on wells that are not subject to the RAP's requirements for meeting drinking water criteria (e.g., Drift- Platteville Aquifer monitoring wells).

Two methods are required for PAH analyses because the low level part per trillion SIM method is not appropriate for samples containing more than approximately 20 micrograms per liter of total PAH. Analysis of samples containing total PAH concentrations over 20 micrograms per liter, if performed with the low level method, requires multiple dilutions and increases the risk of cross-contamination of the samples. This decreases the reliability of the data. Not only will multiple dilutions increase the variability of measurements, but critical quality control information (e.g., surrogate recoveries) is lost. Therefore, for samples containing greater than 20 micrograms per liter of total PAH the analytical method that will be used is Scanning GC/MS Method as described in the Quality Assurance Project Plan (Section 4.6).

The Scanning GC/MS Method analysis will be performed on one-liter samples, and will have detection limits of 10 micrograms per liter. For wells that are tested with this non-criteria method, if the analytical results of the 1988 monitoring indicate total PAH concentrations less than 20 micrograms per liter, the low level method will be used to analyze samples in 1989. This procedure will allow an evaluation of long-term PAH concentrations around the fringe PAH contamination in the Drift-Platteville Aquifer.

Depending on the circumstances and the actual PAH level, 1988 analytical results using the low level that exceed 20,000 nanograms per liter of total PAH will indicate a switch to the Scanning GC/MS Method for 1989 sampling rounds.

REPORTING

The analytical reporting requirements of the Consent Decree and RAP are identified in Part K of the Consent Decree, and Sections 3.4, 4.3.5, 12.1.1, and 12.1.2 of the RAP. Park K requires Reilly to submit an annual progress report on March 15, 1990. This report will contain analytical reports as specified in Section 5.0 of the QAPP for this Plan, all water level measurements and chemical analyses that have not been presented in previous reports (e.g., the St. Peter Aquifer Remedial Investigation Report will present all of the data for the St. Peter Aquifer), and interpretive maps and tables, as specified in RAP Section 3.4(B) and (C). Also the effectiveness of the source and gradient control well systems in the Drift-Platteville Aquifer will be discussed in the annual report.

The reporting requirement for each aquifer, and for the GAC treatment plant, are described below.

GAC Treatment Plant

RAP Section 4.3.5 requires the City to submit an annual report that presents the results of all monitoring of the GAC treatment system. Analytical results for wellhead water, feed water, and treated water will be included in this report. The report will also describe briefly the operating performance of the GAC plant during the previous calendar year. The GAC plant annual reports are due each March 15th.

Mt. Simon-Hinckley Aquifer

The monitoring data for the Mt. Simon-Hinckley Aquifer will be included in the annual report. In addition to the results of all water level measurements and chemical analyses, the report will contain a map showing each well sampled with the concentrations of Other PAH, Carcinogenic PAH, and the sum of benzo(a) pyrene and dibenz(a,h) anthracene labelled by the location of each well in accordance with RAP Section 3.4(C). Since the Mt. Simon-Hinckley Aquifer wells are monitored on an annual basis, there will be only one sampling event to report.

Ironton-Galesville Aquifer

The monitoring data for the Ironton-Galesville Aquifer will be included in the annual report. Since well W105 is the only well that will be sampled in this aquifer and only one other well (W38) will be used for water level measurements, the monitoring data will be reported in tabular form as well as in map form as required by RAP Section 3.4.

Prairie du Chien-Jordan Aquifer

The monitoring data for the Prairie du Chien-Jordan Aquifer will be included in the annual report. The results of all water level measurements and chemical analyses will be included. For each of the quarterly measuring periods a water level contour map will be prepared with elevations labelled at each well. for each sampling event, a map showing each well sampled with the concentrations of Other PAH, Carcinogenic PAH, and the sum of benzo(a)pyrene and dibenz(a,h) anthracene labelled by the location of each well will be prepared in accordance with RAP Section 3.4(C).

St. Peter Aquifer

The monitoring data for the St. Peter Aquifer will be reported in the St. Peter Aquifer Remedial Investigation Report in accordance with RAP Section 8.1.4. The results of chemical analyses will be reported and a map showing each well sampled with the concentrations of Other PAH, Carcinogenic PAH, and the sum of benzo(a)pyrene and dibenz(a,h) anthracene labelled by the location of each well will be prepared in accordance with RAP Section 3.4.(C). Likewise, the results of water level measurements will be provided and a water level contour map will be prepared with elevations labelled at each well in accordance with RAP Section 3.4.(B).

Drift-Platteville Aquifer

The monitoring data for the Drift-Platteville Aquifer including the results of all water level measurements and chemical analyses, will be reported. A water level contour map will be prepared with elevations labelled at each well. A map showing each well sampled with the concentrations of Other PAH, Carcinogenic PAH, and the sum of benzo(a)pyrene and dibenz(a,h)anthracene labelled by the location of each well, and a map with phenolics concentrations labelled by the location of each well will be prepared in accordance with RAP Section 3.4. The Drift-Platteville Aquifer monitoring data will be included in the annual report to support a discussion of the results with respect to the effectiveness of the source and gradient control well systems.

siteplan

APPENDIX A

ADDITIONAL MONITORING REQUIREMENTS

QUALITY ASSURANCE BRANCH

NOV 15 1988

ENVIRONMENT SERVICES DIVISION

Level or Drinking Water Criterion is exceeded during the first year of operation of the system, Reilly shall immediately notify the Regional Administrator, the Director, and the Commissioner, and shall undertake such additional Monitoring as is required by Section 4.3.2.

(D) Routine Monitoring after two carbon changes shall be quarterly, unless the Regional Administrator, the Director, and the Commissioner determine that the observed service life of the carbon is too short to permit this frequency, in which case the Regional Administrator, the Director and the Commissioner shall notify Reilly of the required Monitoring frequency in accordance with Part G or H of the Consent Decree.

4.3.2. Carbon Replacement Monitoring

(A) If the analytical results from any treated water sample obtained pursuant to Section 4.3.1. exceed the Drinking Water Criterion for Other PAH or exceed the Advisory Level for either Carcinogenic PAH or the sum of benzo(a)pyrene and dibenz(a,h)anthracene, then Reilly shall collect two additional treated water samples at least 2 Days apart within one week of receiving the results of the exceedance sample. If the

analytical results from either one or both of the two additional samples also exceed the Drinking Water Criterion for Other PAH or the Advisory Level for either Carcinogenic PAH or the sum of benzo(a)pyrene and dibenz(a,h)anthracene, and neither of the conditions specified in (C)(1) and (2) below are met, then the carbon shall be replaced within 21 Days of receiving the additional sample results.

(B) If the analytical results from any treated water sample obtained pursuant to Section 4.3.1. exceed the Advisory Level for Other PAH, then Monitoring of treated water shall be conducted immediately according to Section 12.1. If the results of any two samples required by Section 12.1. exceed the Drinking Water Criterion for Other PAH, and neither of the conditions specified in (C)(1) and (2) below are met, then the carbon shall be replaced within 21 Days of receiving the additional sample results.

(C) If any analytical result from the additional samples taken as required by (A) or (B) above exceeds the Drinking Water Criterion for Other PAH, or the Advisory Level for either Carcinogenic PAH or the sum of benzo(a)pyrene and dibenz(a,h)anthracene during either

(1) within one year after the carbon treatment system is placed into service or

(2) within one year after the first carbon change if carbon was changed in the first year of operation of the carbon treatment system,

then Reilly shall conduct the Monitoring program specified in Section 4.6. Reilly shall report the results of the Section 4.6. Monitoring program to the Regional Administrator, the Director and the Commissioner within 7 Days of receiving the analytical data. If the treated water from the carbon treatment system is determined pursuant to Section 4.6. to exceed the Drinking Water Criterion for Other PAH or the Advisory Levels for Carcinogenic PAH or the sum of benzo(a)pyrene and dibenz(a,h)anthracene, then Reilly shall replace the carbon within 14 Days of making this determination. If the treated water is determined pursuant to Section 4.6. to meet the Drinking Water Criterion for Other PAH and the Advisory Levels for Carcinogenic PAH and the sum of benzo(a)pyrene and dibenz(a,h)anthracene, then normal GAC system operation and Monitoring in accordance with Sections 4.3.1.(B) and

(C) After the first month of operation, Monitoring of feed water shall be performed quarterly until the carbon has been changed twice. If the Regional Administrator, the Director and the Commissioner determine pursuant to Section 4.3.1.(B) that the GAC system is not operating properly, Reilly may, upon receipt of such determination, be required to resume biweekly Monitoring of feed water.

(D) After two carbon changes in the GAC system, feed water shall be Monitored annually.

4.3.4. Extended Monitoring

Treated water from the GAC system shall be sampled and analyzed annually for the extended list of PAH in Part A.2. of Appendix A, using gas chromatography/mass spectroscopy (GC/MS), or other methods approved by the Regional Administrator and the Director. During this extended analysis, any compounds listed in Part A.2. of Appendix A, or any other compounds which are detected with significant peak heights that are not routinely Monitored, shall be identified and, if possible, quantified, using a mass spectral library which contains extensive spectra of PAH compounds, such as the National Bureau of Standards mass spectral library. Reilly shall analyze a sample of treated or feed water once a year for the acid fraction compounds determined by EPA Test Method 625 or by other methods approved by the Regional Administrator and the Director.

12.

CONTINGENT ACTIONS FOR MUNICIPAL DRINKING WATER SUPPLY WELLS

12.1. Contingent Monitoring

NON-RESPONSIVE

(A) three consecutive samples yield results less than all of the Advisory Levels, in which case the sampling interval shall revert to the level specified for the affected well in Sections 3., 4.3., 5.1., 6.2.1., 7.3., or 8.4. above; or

(B) a sample yields results greater than a Drinking Water Criterion, in which case the requirements of Section 12.1.2., below, apply.

12.1.2. Exceedance of Drinking Water Criteria

(A) If the analytical result of any sample taken from an active municipal drinking water well pursuant to Section 12.1.1 exceeds the Drinking Water Criterion for Carcinogenic PAH, the sum of benzo(a)pyrene and dibenz(a,h)anthracene, or Other PAH, the Regional Administrator, the Director and the Commissioner shall be immediately notified by Reilly, and another sample shall be taken by Reilly within three Days of receiving the results of the first sample and analyzed. If the analytical result of the second sample is less than all of the Drinking Water Criteria but greater than any Advisory Level, a third sample shall be taken by Reilly within seven Days of receiving the results of the second sample and analyzed. If the results of this third sample are less than all of the Drinking Water Criteria, but greater than any Advisory Level, Reilly shall comply with the monthly sampling frequency specified in Section 12.1.1. above.

(B) If the analytical result of the second or third sample taken pursuant to Section 12.1.2.(A) above is greater than the Drinking Water Criterion for Carcinogenic PAH, the sum of benzo(a)pyrene and dibenz(a,h)anthracene, or Other PAH, Reilly shall Monitor the well weekly until such time as either: (1) three consecutive samples yield results below all of the Drinking Water Criteria, in which case Monitoring of the well shall revert to the normal schedule (including Advisory Level Monitoring as specified by Section 12.1.1. above if applicable); or, (2) three consecutive samples yield results above any Drinking Water Criterion, in which case Reilly shall immediately notify the Regional Administrator, the Director and the Commissioner. The Commissioner may then require the affected well to be taken out of service, in which case Reilly shall undertake the contingent actions specified in Section 12.2. below.

12.I.3. Analytical Turn-around Time

All Monitoring conducted pursuant to Section 12.1. shall be on a 21-Day turn-around time basis in accordance with Section 2.8.

APPENDIX B

CONTINGENCY PLAN

Contingent Actions for Contaminated Water

It is possible that groundwater contaminated with coal tar materials will be encountered during the sample retrieval operations. Groundwater generated during sample retrieval operations will be classified as contaminated if the water exhibits a discernible oil sheen or oil phase. Contaminated water will be pumped to the sanitary sewer if it contains less than ten percent organic material. Estimates of flow rate, disposal volume and water quality will be established and the Metropolitan Waste Control Commission (MWCC) will be informed before the discharge to the sanitary sewer if the estimated flow exceeds 150 gallons per workday from any individual site. Contaminated liquids containing more than ten percent organic material or failing to receive MWCC approval for discharge will be disposed of in accordance with all applicable local, state and federal rules and regulations and Part T of the Consent Decree. Uncontaminated water will be disposed of in the storm sewer or by other means acceptable to the City of St. Louis Park.

The City will be responsible for keeping the Environmental Protection Agency, Minnesota Pollution Control Agency and Reilly Tar & Chemical Corporation informed of all significant actions involving the generation of contaminated groundwater. All actions, decisions and communications by the City, Environmental Protection Agency, Minnesota Pollution Control Agency, and Reilly in dealing with contaminated soils will be in accordance with and subject to the provisions of Parts I, J, and O of the Consent Decree in the Reilly settlement.

QUALITY ASSURANCE PROJECT PLAN FOR SAMPLING AND ANALYSIS - GROUNDWATER AND GAC PLANT MONITORING

Prepared by

The City of St. Louis Park
St. Louis Park, MN 55416

Approved by: Gary Torf Date: 10/31/88
Gary Torf, Quality Assurance
Director, Rocky Mountain Analytical Laboratory

Approved by: James N. Grube Date: 10/31/88
James N. Grube, Project Manager
City of St. Louis Park, MN

Approved by: _____ Date: _____
Quality Assurance Officer
U.S. EPA Region V

Approved by: _____ Date: _____
Remedial Project Manager
U.S. EPA Region V

TABLE OF CONTENTS

		Page
1.	TITLE PAGE	1
2.	TABLE OF CONTENTS	2-4
3.	PROJECT DESCRIPTION	
	3.1 Background	5-6
	3.2 Objectives and Intended Data Usage	6-8
4.	PROJECT ORGANIZATION AND RESPONSIBILITIES	9-11
5.	QUALITY ASSURANCE OBJECTIVES	12-13
6.	SAMPLING PROCEDURES	14
	6.1 Training	14
	6.2 Document Control	14-25
	6.3 Sample Control Procedures and Chain of Custody	25
	6.3.1 Sample Identification	25-27
	6.3.2 Chain-of-Custody Procedures	27-29
	6.3.3 Field Forms	30
	6.4 Sampling Procedures - GAC Plant	30-31
	6.5 Groundwater Sampling and Water Level Measurements	32
	6.5.1 Decontamination	32
	6.5.2 Field Blanks	32
	6.5.3 Sample Containers	33
	6.5.4 Sample Collection - Monitoring Wells and Piezometers	33-35
	6.5.5 Sample Collection - Pumping Wells	35
	6.6 Sample Preservation, Shipment and Storage	35-36
	6.7 Field Measurement Equipment	36
	6.8 Duplicate Samples	36-37
7.	SAMPLE CUSTODY	38
	7.1 Security and Recordkeeping	38
	7.2 Final Evidence File	38
8.	CALIBRATION PROCEDURES	39
	8.1 Low Level (ppt) Analysis	39-41
	8.2 Non-Criteria Analysis	41
	8.3 Extended Analysis	41-43
	8.4 Phenolics	43

9.	ANALYTICAL PROCEDURES	44
	9.1 Low Level Analysis	44-45
	9.2 Non-Criteria Analysis	45
	9.3 Extended Analysis	45
	9.4 Phenolics	45
10.	DATA REDUCTION, VALIDATION AND REPORTING	46
	10.1 Data Reduction and Validation	46
	10.2 Turnaround Time	46
	10.3 Reporting/Data Deliverables	46-49
	10.4 Reporting Requirements for Samples Exceeding Advisory Levels or Drinking Water Criterion	50
	10.5 Final Evidence Files	50-51
11.	INTERNAL QUALITY CONTROL CHECK	52
	11.1 Low Level PAH and Non-Criteria PAH Analyses	52
	11.1.1 Method Blank Analysis	52
	11.1.2 Surrogate Compound Analysis	53
	11.1.3 Matrix Spike Analysis	53
	11.1.4 Duplicates	54
	11.1.5 Internal Standard Areas	54
	11.2 Extended Analysis	54
	11.3 Phenolics	54
	11.3.1 Blanks	54
	11.3.2 Laboratory Check Standard	54-55
	11.3.3 Matrix Spiles	55
	11.3.4 Duplicates	55
12.	PERFORMANCE AND SYSTEM AUDITS	56
13.	PREVENTIVE MAINTENANCE	57
	13.1 Service Contracts	57
	13.2 Instrument Logbooks	57
	13.3 Field Equipment	58
	13.3.1 Thermometer	58
	13.3.2 Water Level Measurement Tape	58
	13.3.3 Hydrolab	58
14.	SPECIFIC PROCEDURES TO ASSESS DATA PRECISION, ACCURACY AND COMPLETENESS	59
	14.1 External Components	59
	14.2 Internal Components	59-60
	14.3 Calculation Techniques	60-61

15. CORRECTIVE ACTION 62
15.1 Low Level PAH and Extended Analyses 62
15.1.1 Surrogates 62-64
15.1.2 Matrix Spikes 64
15.1.3 Blanks 65
15.2 Other Corrective Actions 65
15.2.1 Samples 65
15.2.2 Sample Extracts 65
15.2.3 Quality Control Samples 66
15.2.4 Performance and System Audits 66

16. QUALITY ASSURANCE REPORTS TO MANAGEMENT 67-69

APPENDIX A - STANDARD OPERATING PROCEDURES

APPENDIX B - DETERMINATION OF LOW LEVEL (PART PER TRILLION) PAH AND HETEROCYCLES IN WATER

- PHENOLICS, TOTAL RECOVERABLE - EPA METHOD 420.2

3. PROJECT DESCRIPTION

3.1 Background

Groundwater in the City of St. Louis Park, Minnesota has been contaminated by activities at a coal-tar distillation and wood preserving plant operated from 1917 to 1972. Numerous previous studies have identified polynuclear aromatic hydrocarbons (PAH) present in various aquifers beneath St. Louis Park and adjacent communities. Accordingly, the site of the plant operations was placed on the National Priorities List and the federal and state governments sought remediation of environmental contamination via United States District Court Case Civil No. 4-80-469.

A summary of the aquifers which underly the former wood preserving plant site, their approximate location below the surface level, the general use of the aquifers, and the relative maximum PAH concentrations measured in each unit (as stated in the federal government's Record of Decision in Case Civil No. 4-80-469) is as follows:

Aquifer	Approximate Depth (ft.)	Use	Upper Range of Contamination Total PAHs
Drift-Platteville	0 - 90	Private/Industrial wells	1000 ug/l offsite
St. Peter	90 - 200	Municipal/Private drinking water wells	10 ug/l offsite
Prairie du Chien-Jordan	250 - 500	Municipal drinking water wells	10 ug/l offsite
Ironton-Galesville	700 - 750	Industrial	10 ug/l is estimated to be on-site
Mt. Simon-Hinckley	800 - 1100	Municipal drinking water wells	Not detected

More extensive information relative to the identified level of PAH's in the various aquifers is provided in the following reports:

- Annual Monitoring Report for 1988
- St. Peter Aquifer Remedial Investigation Report (March 30, 1989)
- Drift-Platteville Aquifer (Northern Area) Remedial Investigation Report (March 30, 1989)

The United States Environmental Protection Agency (EPA), the Minnesota Pollution Control Authority (MPCA), the Minnesota Department of Health (MDH), the City of St. Louis park (City), and Reilly Tar & Chemical Corporation (Reilly) have agreed to acceptable water quality criteria for PAH. These criteria, as incorporated into the Consent Decree - Remedial Action Plan (RAP), in the case referenced above include the following concentration levels:

	Advisory Level	Drinking Water Criteria
o Sum of benzo(a) pyrene and dibenz(a,h) anthracene	3.0 ng/1*	5.6 ng/1
o Carcinogenic PAH	15 ng/1	28 ng/1
o Other PAH	175 ng/1	280 ng/1

*or the lowest concentration that can be quantified, whichever is greater

In conjunction with the implementation of remedial measures to limit the spread of contaminants, a granular activated carbon (GAC) treatment system has been installed to treat water from St. Louis Park (SLP) wells 10 and 15. Further provisions of the RAP call for long term monitoring of the influent and effluent of the GAC treatment plant and the major aquifers underlying the region. The general objective of the monitoring program is to identify the distribution of PAH and/or phenolics in the ground water. The analytical data will be used to evaluate contamination by comparing the levels of PAH and/or phenolics found in the various samples with historical water quality data and with water quality criteria established in the Consent Decree-RAP. The specific objectives of the sampling and analysis program, and therefore, the intended end use of the data vary slightly for the different aquifers (Mt. Simon-Hinckley, Ironton-Galesville, Prairie du Chien-Jordan, St. Peter, and Drift- Platteville) being monitored in accordance with the Consent Decree-RAP.

3.2 Objectives and Intended Data Usage

The GAC plant monitoring is being done to assess and continuously evaluate the performance of the treatment system. Analytical results for influent and effluent samples will be compared to the drinking water criteria for PAH as established in the Consent Decree-RAP. Based on these comparisons, decisions will be made on: 1) possible modifications to the treatment system (e.g., adding another carbon column), 2) system operations (e.g., when the carbon should be replaced), and 3) cessation of the treatment system, if desired, when sufficiently low concentrations of PAH in influent samples are demonstrated.

The objective of sampling the four existing Mt. Simon-Hinckley Aquifer municipal drinking water wells, and sampling any new Mt. Simon-Hinckley Aquifer municipal drinking water wells installed within one mile of well W23, and analyzing for PAH is to assure the continued protection of these wells from PAH resulting from activities of Reilly at the site. The analytical data will be used to make comparisons between the levels of PAH found in the Mt. Simon-Hinckley Aquifer, and the drinking water criteria established in the Consent Decree-RAP.

The objective of sampling and analyzing the Ironton-Galesville Aquifer source control well (W105) is to assess the levels of PAH in the discharge from W105 when it is pumping a monthly average of 25 gallons per minute. The data will be used to compare the concentration of total PAH in the samples to a cessation criterion of 10 micrograms per liter of total PAH established in the Consent Decree-RAP. Also, if any new Ironton-Galesville Aquifer drinking water wells are installed within one mile of well W23, then those wells will be sampled and analyzed for PAH to meet the objective of assuring protection of the well from PAH resulting from the activities of Reilly at the site. The analytical data would be used to compare the levels of PAH found in potential Ironton-Galesville Aquifer drinking water wells to the drinking water criteria established in the Consent Decree-RAP.

The objectives of monitoring the many Prairie du Chien-Jordan Aquifer wells, including municipal drinking water wells, private or industrial wells, and monitoring wells are to: 1) monitor the distribution of PAH in the aquifer, thus evaluating the source and gradient control system, and 2) assure the continued protection of drinking water wells from PAH resulting from the activities of Reilly at the site. The analytical data will be used to compare the levels of PAH in the Prairie du Chien-Jordan Aquifer to historical PAH data and to various criteria established in the Consent Decree-RAP (e.g., drinking water criteria for drinking water wells, and a cessation criterion of 10 micrograms per liter of total PAH for source control well W23). Analytical data for samples of the discharge from gradient control well SLP4 will be compared to discharge limitations in an NPDES permit which has been applied for pursuant to completion of a Feasibility Study to determine the appropriate disposition of SLP4 discharge. The draft NPDES permit shall contain the following effluent limitations.

Parameter	Daily Maximum Concentration	30-Day Average Concentration
Carcinogenic PAH	---	311 ng/l
Other PAH	34 ug/l	17 ug/l
Phenanthrene	2 ug/l	1 ug/l
Phenolics	---	10 ug/l

In addition to water quality data generation, water level data will be used for the purpose of determining ground water flow patterns in the Prairie du Chien-Jordan Aquifer.

The objective of monitoring St. Peter Aquifer wells is to determine the nature and extent of PAH in the St. Peter Aquifer resulting from the activities of Reilly at the site. The analytical data will be used to compare the levels of PAH in the St. Peter Aquifer to historical PAH data and to the drinking water criteria established in the Consent Decree-RAP. Water level data will be used to evaluate ground water flow patterns in the St. Peter Aquifer.

The objectives of monitoring the Drift-Platteville Aquifer wells are to: (1) monitor the distribution of PAH and phenolics in the aquifer, thus evaluating the source and gradient control systems, and (2) to further define the nature and extent of PAH and phenolics in the Northern Area of the Drift-Platteville Aquifer resulting from the activities of Reilly at the site. The analytical data will be used to compare levels of PAH and phenolics in the Drift-Platteville Aquifer with historical water quality data for the aquifer and with various criteria established in the Consent Decree-RAP for PAH and phenolics. Water level data will be used to evaluate ground-water flow patterns in the Drift-Platteville Aquifer.

The Site Management Plan outlines the scope of work to be performed in order to monitor the ground water in the St. Louis Park, Minnesota area in accordance with the Consent Decree-RAP related to the Reilly Tar & Chemical Corp. N.P.L. site. Included in this plan are: (1) the identity of wells to be monitored, (2) the schedule for ground water monitoring, and (3) a description of the procedures that will be used for sample collection, water level measurement, sample handling, sample analysis, and reporting.

The time period covered by this Plan is from the date of its acceptance and approval by the Agencies, or January 1, 1989 whichever date is later, to December 31, 1989. A subsequent Sampling Plan (RAP Section 3.3) will be submitted by October 31, 1989, covering the 1990 calendar year.

This Plan was prepared, in part, based on the knowledge and experience gained from monitoring conducted under the Initial Sampling Plan. The Initial Sampling Plan was approved in June 1988, and monitoring has been conducted in each aquifer and at the GAC plant in accordance with that Plan. Several improvements in the area of sample analysis have been incorporated into this Plan, while sample collection procedures remain unchanged. Elsewhere, this Plan has been updated to reflect the monitoring that has already taken place, changes in project personnel, and other procedural changes.

4. PROJECT ORGANIZATION AND RESPONSIBILITIES

This project is being conducted in accordance with the Consent Decree-Remedial Action Plan (RAP) for the Reilly Tar & Chemical Corporation N.P.L site in St. Louis Park, Minnesota. The parties to the Consent Decree include Reilly, the City, EPA, MPCA, and MDH. The project organization shown in Figure 4-1 indicates the involvement of the parties to the Consent Decree, as appropriate. The City is responsible for the completion of the monitoring tasks described in this Plan. The City's Project Manager is responsible for overall project management. The City shall be assisted by two consultants in the retrieval and laboratory analysis of water samples.

ENSR Consulting and Engineering (ENSR) will be responsible for the coordination of all field sample retrieval and Enseco/Rocky Mountain Analytical Laboratory (RMAL), with analytical facilities in Arvada, Colorado, will be responsible for the coordination and completion of all laboratory analyses. Responsibilities of the key positions in the organization of RMAL are described below:

- Laboratory Project Manager: The Laboratory Project Manager is ultimately responsible for all laboratories and is the primary point of contact for issues surrounding this Quality Assurance Project Plan (QAPP), resolving technical problems, modifications to Standard Operating Procedures (SOP's) etc.

- Laboratory Project Coordinator: The Laboratory Project Coordinator is responsible for the cordination of routine day to day project activities including project initiative, status tracking, data review and requests, inquiries and general communication related to the project.

- Operations Manager: The Operations Manager is responsible for oversight of preparation and analysis of PAH samples to ensure that project objectives, requirements and Quality Assurance/Quality Control (QA/QC) criteria are met.

- Laboratory Supervisor: The Laboratory Supervisor shall be responsible for daily supervision of technicians and analysts for PAH and total phenolics analyses.

- Preparation Supervisor: The Preparation Supervisor is responsible for oversight of sample extraction and preparation for analysis.

- Analyst: The Analyst is responsible for the analysis of water samples for the requested parameters utilizing the methods prescribed by this Plan.

- Technician: The Technician is responsible for sample extraction. This requires practical experience and knowledge in the techniques of liquid - liquid solvent extraction, Kuderna - Danish evaporation, and the quantitative preparation of sample extracts for analysis.

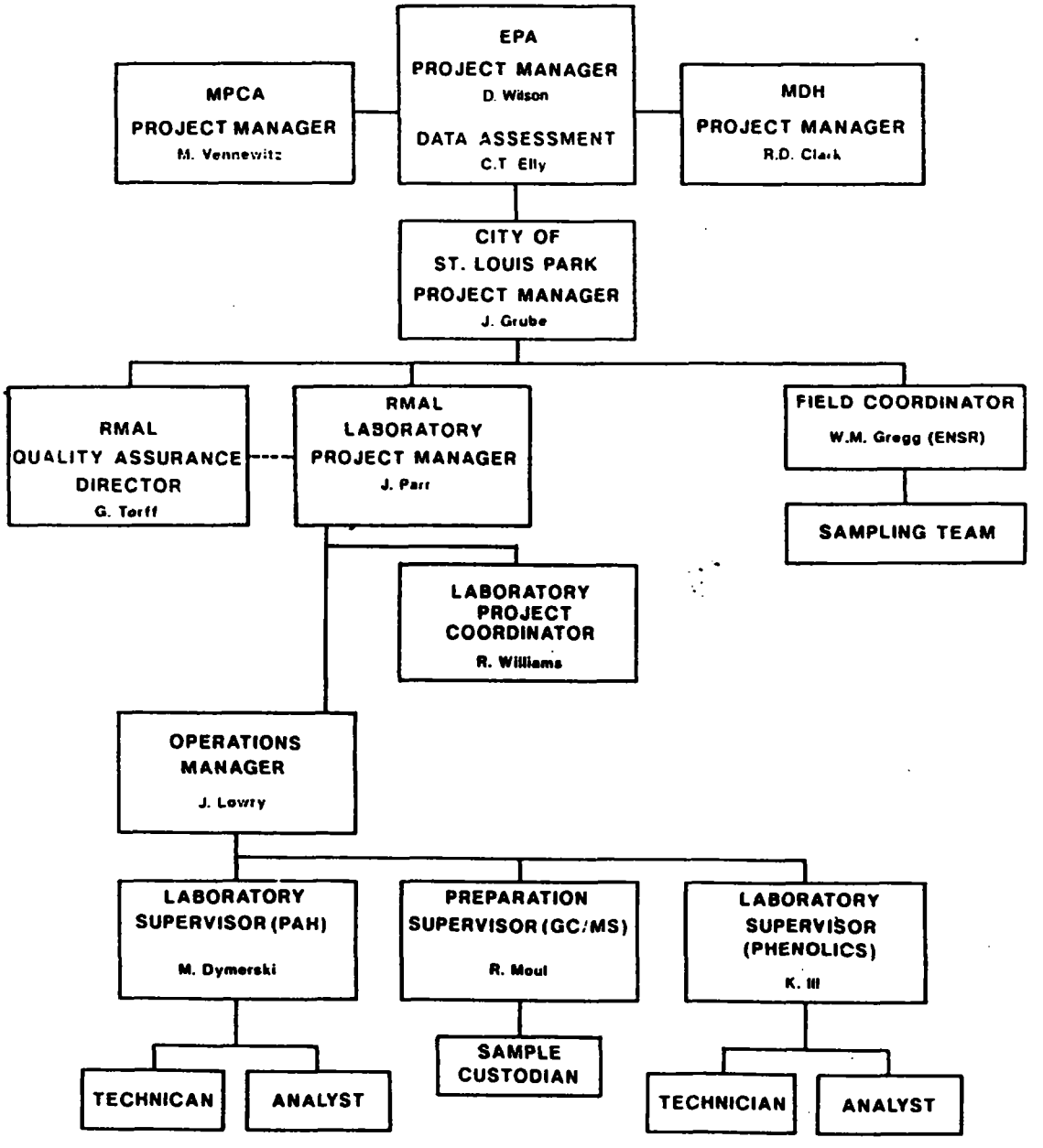

Figure 4-1 Project Organizational Chart

- Quality Assurance Director: The Quality Assurance Director is responsible for overall quality control oversight. The Quality Assurance Director supervises an independent QA/QC department and reports directly to the Division Director and Corporate Vice President for Quality Assurance.

- Data Assessment: The evaluation of data, as it is compiled and organized in accordance with the requirements of the QAPP, is the responsibility of the Operations Manager. Additional review, evaluation, and assessment of the data is performed by the Laboratory Manager, thereby providing additional assurance that the requirements of the QAPP are met.

The Sampling Team shall consist of employees of the City of St. Louis Park and ENSR. The team shall be responsible for sample collection; conducting field measurements (i.e. water level); and maintaining proper decontamination procedures stated in the QAPP.

The EPA is responsible for review and approval of this Plan. The Remedial Project Manager, EPA Region 5, and Quality Assurance Officer, EPA Region 5 shall be responsible for the review and approval of the Plan on behalf of the EPA.

The EPA Contract and Program Management Section (CPMS), Region V, shall be responsible for the review of up to 10 percent of the reports and data packages generated in accordance with Section 10.3. of this QAPP.

5. QUALITY ASSURANCE OBJECTIVES

The principal objectives of this Plan pertain to the collection of data that are sufficient to monitor the effectiveness of the GAC treatment system and to detect changes in groundwater quality. Therefore, the quality of the data gathered in this project can be defined in terms of the following elements:

- Completeness - a sufficient number of successful (valid) measurements to characterize the concentrations of PAH in the influent and effluent of the treatment system and in the aquifers of interest over a period of time. For this project, the completeness objective is that 90% of the laboratory analyses and 95% of the field measurements will produce valid data.

- Representativeness - the extent to which reported analytical results truly depict the PAH concentrations in the sampled environment. Representativeness is optimized through proper selection of sampling sites, times and procedures, through proper sample preservation, and through prompt extraction and analysis.

- Accuracy and Precision - Accurate and precise data will be achieved through the use of sampling and analytical procedures that minimize biases, through the use of standard procedures, through the meticulous calibration of analytical equipment and by implementing corrective action whenever measured accuracy and precision exceed pre-established limits. Accuracy and precision will be measured by the analysis of method spikes and duplicate samples.

  It is essential that representative ground water samples be retrieved for laboratory analyses. Accuracy and precision in the measurement of parameters used to monitor ground water as it is purged from monitor wells and piezometers will be achieved through the use of standard monitoring procedures carried out continuously during the sample retrieval task. Field measurement equipment will be calibrated in accordance with the manufacturer's recommendations, as outlined in Table 6-6, and appropriate corrective action will be initiated whenever measured accuracy and precision exceed pre-established limits.

- Sensitivity - determination of instrument sensitivity is accomplished by calibration using multiple concentrations of the analytes of interest. Once instrument sensitivity is demonstrated, analysis of replicate spiked samples of deionized reagent water at a concentration of 1-5 times the instrument sensitivity, is used to determine method sensitivity (i.e. method detection limit).

- Comparability - the extent to which comparisons among separate measurements will yield valid conclusions. Comparability among measurements in the monitoring program will be achieved through the use of rigorous standard sampling and analytical procedures.

- Traceability - the extent to which results can be substantiated by hard-copy documentation. Traceability documentation exists in two forms: that which links final numerical results to authoritative measurement standards, and that which explicitly describes the history of each sample from collection to analysis.

The fundamental mechanisms that will be employed to achieve these quality goals can be categorized as prevention, assessment and correction, as follows:

1) Prevention of defects in the quality through planning and design, documented instructions and procedures, and careful selection and training of skilled, qualified personnel;

2) Quality assessment through a program of regular audits and inspections to supplement continual informal review;

3) Permanent correction of conditions adverse to quality through a closed-loop corrective action system.

The St. Louis Park sampling program Quality Assurance Project Plan has been prepared in direct response to these goals. This Plan describes the quality assurance program to be implemented and the quality control procedures to be followed by RMAL during the course of laboratory analyses in support of the various site investigation studies for the St. Louis Park site. The Quality Assurance objectives will include field blanks, method blanks, field duplicates, surrogate spikes, and matrix spikes. Precision, accuracy and completeness criteria are established for each parameter of interest. The specific criteria for each analysis and parameter are set forth in detail in the following sections:

Objective	Frequency	Sections Discussing Criteria
Field Duplicates	10%	6.8, 11.1.4
Field Blanks	10%	6.5.2, 15.2.3
Method Blanks	5%	11.1.1, 15.1.3
Surrogate Spikes	100% of GC/MS analyses	11.1.2, 15.1.1
Matrix Spikes	5%	11.1.3, 15.1.2

6. SAMPLING PROCEDURES

Samples will be collected by ENSR and City personnel. The overall sampling program is summarized in Tables 6-1, 6-2, and 6-3, and Figures 6-1 through 6-5. This section discusses general QAPP provisions relevant to sample collection, containerization, packaging and shipping activities.

6.1 Training

All ENSR and City personnel working on the project will be properly trained, qualified individuals. Prior to commencement of work, personnel will be given instruction specific to this project, covering the following areas:

- Organization and lines of communication and authority
- Overview of the Site Management Plan and QAPP,
- Documentation requirements,
- Decontamination requirements,
- Health and Safety considerations.

Training of field personnel will be provided by the Field Coordinator or a qualified designee.

The analysts performing chemical analyses of samples will be trained in and will have exhibited proficiency in the analytical methods to be employed.

6.2 Document Control

Document Control for the Sampling Plan serves a two-fold purpose. It is a formal system of activities that ensures that:

1) All participants in the project are promptly informed of revisions of the QAPP; and

2) All documents generated during the course of the program are accounted for during, and at the end of the project.

This Plan and all Standard Operating Procedure documents have the following information on each page:

- Document Number
- Page Number
- Total number of pages in document
- Revision number
- Revision date

TABLE 6-1
SUMMARY OF SAMPLING AND ANALYTICAL PROGRAM

Sample Matrix	Field Parameter	Number of Samples	Laborary Parameters	Number of Samples	Field Blanks	Field Duplicates	Matrix Spike	Matrix Total
GAC Treated Water	X	X	PAH (ppt)	4	4 ?	4	4 ?	16
			Acid Fraction compounds[a]	1	~~X~~ 1	1	~~X~~ 1	2
GAC Feed Water	X	X	PAH (ppt)	4	~~X~~ 1	~~X~~ 1	~~X~~ 1	4
Groundwater	pH	46	PAH (ppt)	51	7	13	4	75
	temperature		PAH (ppb)	35	4	4	3	46
	Specific Conductance		Total Phenols	46	7	7	6	66
	water level							

(a) Analysis of sample for acid fraction compounds shall be in accordance with EPA Method 625

CLP SOW

TABLE 6-2
SAMPLING PLAN GAC PLANT
MONITORING SCHEDULE[a]

RAP Section	Sampling Points	Start of Monitoring	Sampling Frequency	Analyses[b]
4.3.1(C)	Treated water(TRTD)	Date of plan approval	Quarterly	PAH(ppt)[c]
4.3.3(C)	Feed water(FEED)	Date of plan approval	Annually	PAH(ppt)
4.3.4	Treated water	Date of plan approval	Annually	Extended PAH(~~ppt~~) ug/L
4.3.4	Treated or Feed water	Date of plan approval	Annually	Acid fraction compounds in EPA Test Method 625. ? or CLP SOW

(a) This schedule does not include certain contingencies (eg. exceedance monitoring) and, therefore, represents the minimum program that is likely to occur between the date this Plan is approved and December 31, 1989. Sections 4 and 12 of the RAP outline the additional sampling that will be conducted if PAH criteria are exceeded. The first samples will be collected during the period indicated by the monitoring frequency following the date of the start of monitoring. The location of the GAC plant is shown in Figure 6-1.

(b) List of parameters and methods for analysis of PAH, extended PAH, and acid fraction compounds in EPA Test Method 625 are provided in the QAPP. Field blanks will be collected and analyzed at a frequency of one for every 10 samples or fewer. Treated water will be duplicated at a rate of 100%. Feed water duplicate samples will be collected and analyzed at a frequency of one per 10 samples.

(c) ppt = parts per trillion. This signifies analysis using selected ion monitoring gas chromatography mass spectrometry.

TABLE 6-3
SAMPLING PLAN GROUND WATER
MONITORING SCHEDULE [a]

Source of Water	RAP Section	Sampling Points[j]	Start of Monitoring	Sampling Frequency	Analyses[b]	Duplicate Samples
Mt. Simon-Hinckley Aquifer	5.1	SLP11,SLP12, SLP13,SLP17	Date of plan approval	Annually	PAH(ppt)[c]	SLP17
	5.3.2	New municipal wells within one mile of well W23	At the time of installation	Annually	PAH(ppt)	
Ironton-Galesville Aquifer	6.1.4	W105 W38[e]	Date of plan approval	Semi-annually	PAH(ppb)[d]	W105
	6.2.1	New municipal wells within one mile of well W23	At the time of installation	Annually	PAH(ppt)	
Prairie du Chien-Jordan Aquifer	7.3(A)	SLP4	Start of pumping	Quarterly	PAH(ppt) phenolics	SLP4
	7.3(B)	W23	Date of plan approval	Semi-annually	PAH(ppb)	
	7.3(C)	SLP6,SLP7 or SLP9,W48	Date of plan approval	Quarterly	PAH(ppt)	SLP6
	7.3(D)[k]	AHM or MGC[g] E2,E13,H3, SLP10 or SLP15, SLP14,SLP16,W402[h] W403,W119	Date of plan approval	Semi-annually	PAH(ppt)	W119
	7.3(E)[k]	SLP5,H6,E3, E15,MTK6, W29,W40, W70,W401	Date of plan approval	Annually	PAH(ppt)	W70

TABLE 6-3 (Continued)

Source of Water	RAP Section	Sampling Points[j]	Start of Monitoring	Sampling Frequency	Analyses[b]	Duplicate Samples
	7.3(F)	W112,W32, SLP8,SLP10, E4,E7	Date of plan approval	Quarterly	No Chemical analyses[f]	
St. Peter Aquifer	8.1.3	SLP3 plus six additional monitoring wells[l]	Date of plan approval	Annually	PAH(ppt)	SLP3 1 Monitor Well
Drift-Platteville Aquifer	9.1.3 and 9.2.3	W420,W421, W422	Date of plan approval	Quarterly	PAH(ppb) and total phenols	W422
	9.6	Drift:W2,W6 W10,W11,W12, W116,W117, W128,W135,W136 W423,W425,W427, P109,P112, Platteville: W1,W18,W19,W20, W27,W101, W120,W121, W124,W130, W131, W143,W424,W426, W428	Date of plan approval	Annually[i]	PAH(ppb) and total phenols	W11,W423,W428

(a) This schedule does not include certain contingencies (e.g. exceedance monitoring) and, therefore, represents the minimum program that is likely to occur between the date this Plan is approved and December 31, 1989. Section 12 of the RAP outlines the additional sampling that will be conducted if the drinking water criteria are exceeded in samples from water supply wells. The first samples will be collected during the period indicated by the monitoring frequency following the date of the start of monitoring. Field blanks will be collected at a frequency of one for every 10 samples or fewer, and one duplicate sample will be collected for every 10 samples.

TABLE 6-3 (Continued)

(b) Lists of parameters and descriptions of the methods for analysis of PAH, phenolics, and expanded analyses are provided in the QAPP. Water levels will be measured each time samples are collected for analysis, except for those wells which prove to be inaccessible for such measurements.

(c) ppt = parts per trillion. This signifies analysis using selected ion monitoring gas chromatography mass spectrometry.

(d) ppb = parts per billion. This signifies analysis by the Non-Criteria Method. If analytical results for individual wells are below 20 micrograms per liter (20 ppb) using this method, then the Low Level Method will be used on subsequent monitoring rounds.

(e) Water levels in W38 will be measured each time W105 is sampled.

(f) Water levels only (no monitoring) will be measured at these wells, except for those wells which prove to be inaccessible for such measurements.

(g) AHM = American Hardware Mutual, MGC = Minikahda Golf Course.

(h) Well W402 may or may not be available for sampling at the same time as the other wells on these lists. It will be sampled in conjunction with the monitoring performed in accordance with the schedule shown, once it has been constructed.

(i) If any of the wells listed here become damaged, destroyed, or otherwise unsuitable for sampling, alternate wells will be selected by the Project Leaders for monitoring.

(j) Sampling points are located on the maps shown in Figures 1 through 5. Letter prefixes to well codes are defined as follows:

W - 4-inch monitoring well
P - monitoring piezometer
SLP - St. Louis Park supply well
E - Edina supply well
H - Hopkins supply well
MTK - Minnetonka supply well

(k) Water level measurements will be made quarterly at these wells, except for those wells which prove to be inaccessible for such measurements.

(l) The six St. Peter Aquifer monitoring wells that will be monitored according to RAP Section 8.1.3 will be selected by the Project Leaders based on the results of the first and second monitoring rounds of 1988.

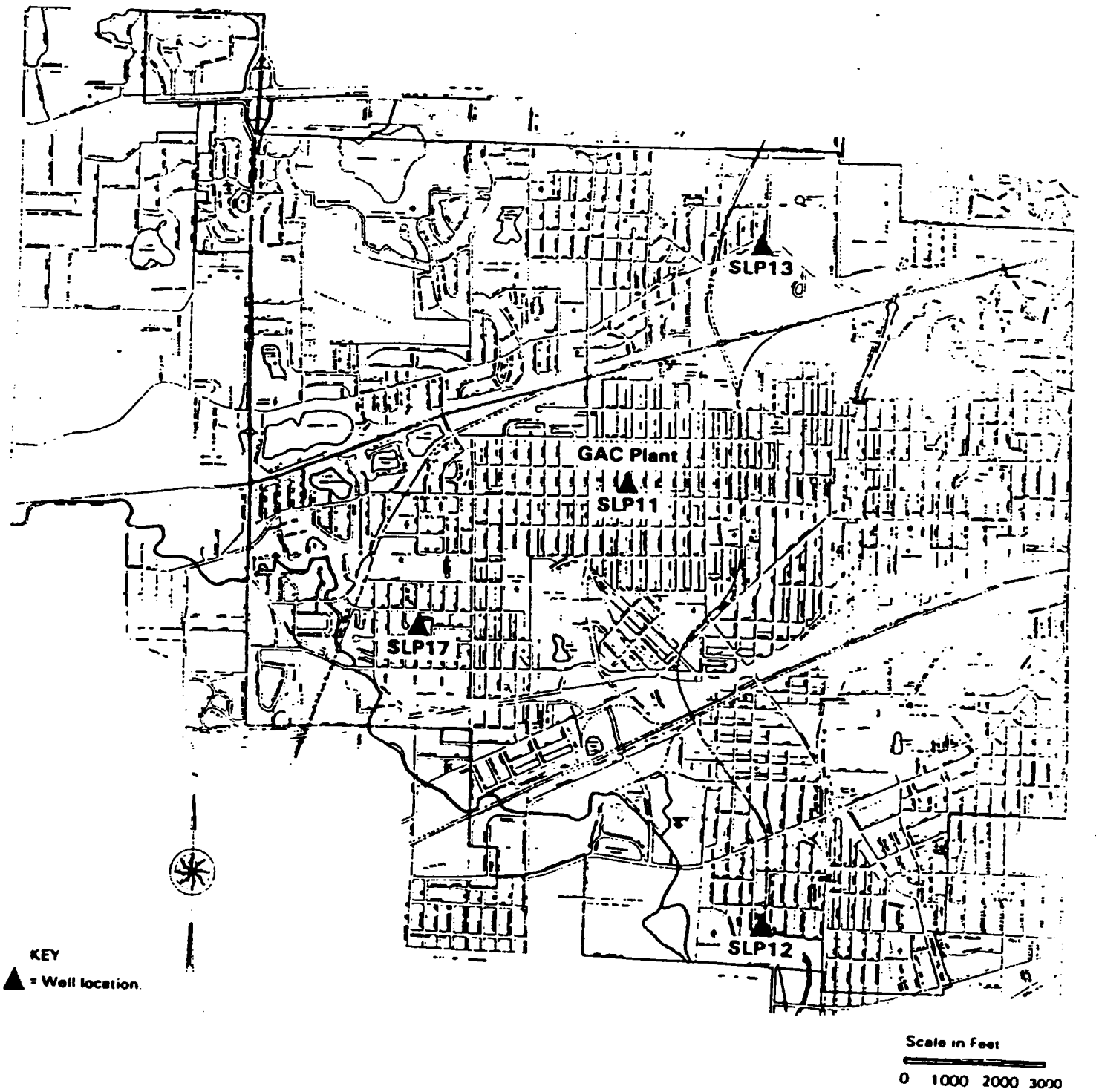

Figure 6-1 Location of Mt. Simon-Hinkley Monitoring Wells and St. Louis Park GAC Water-Treatment Plant

NON-RESPONSIVE

NON-RESPONSIVE

Figure 6-3 Location of Source and Gradient Control Wells

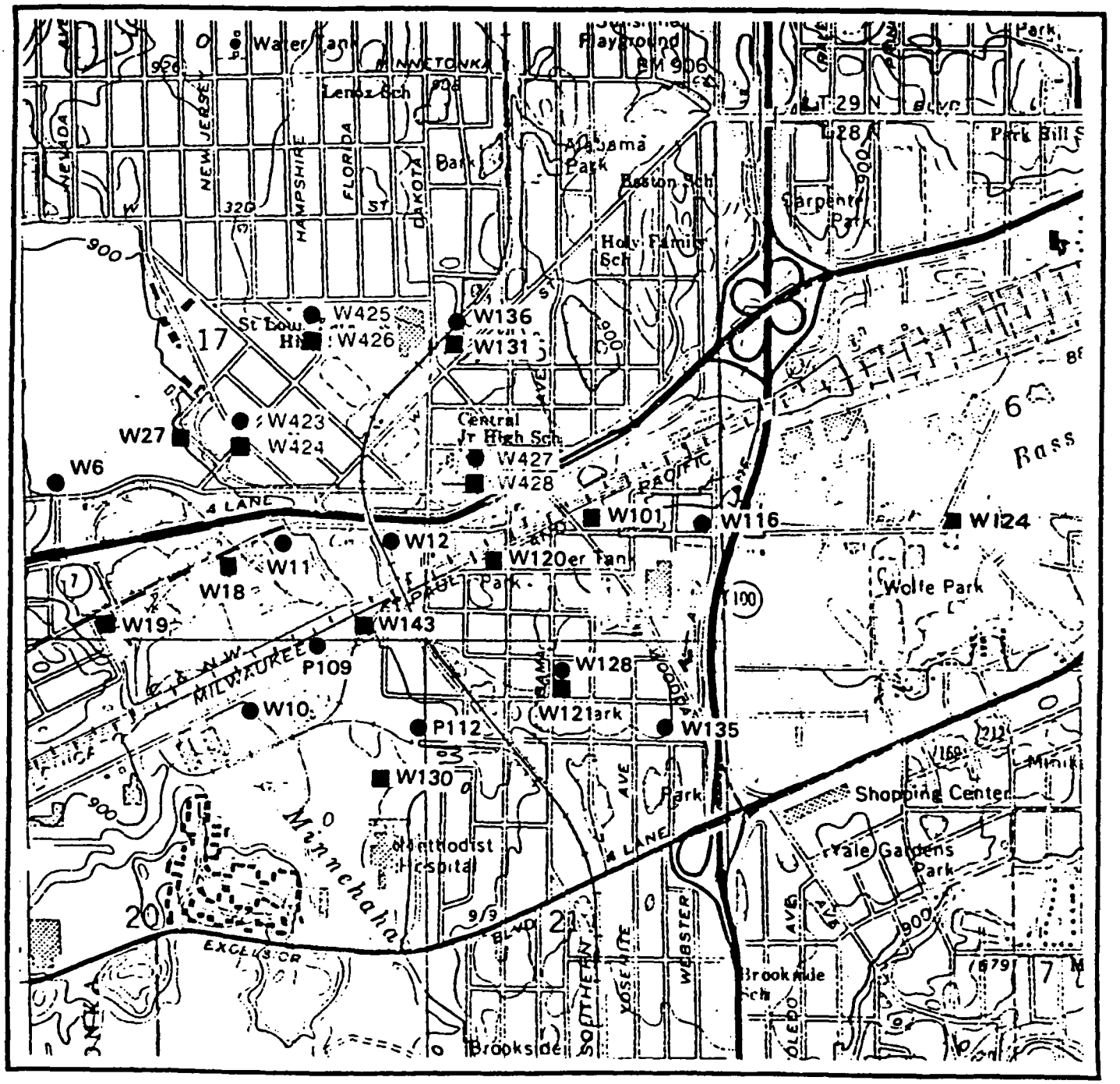

SCALE

0 500 1000 2000

FEET

N

EXPLANATION

● DRIFT WELLS

■ PLATTEVILLE WELLS

Figure 6-4 Location of Drift-Platteville Monitoring Wells

Reference: MGS, Miscellaneous Map Series,
M-57, Plate 1 of 2, Bedrock Geology,

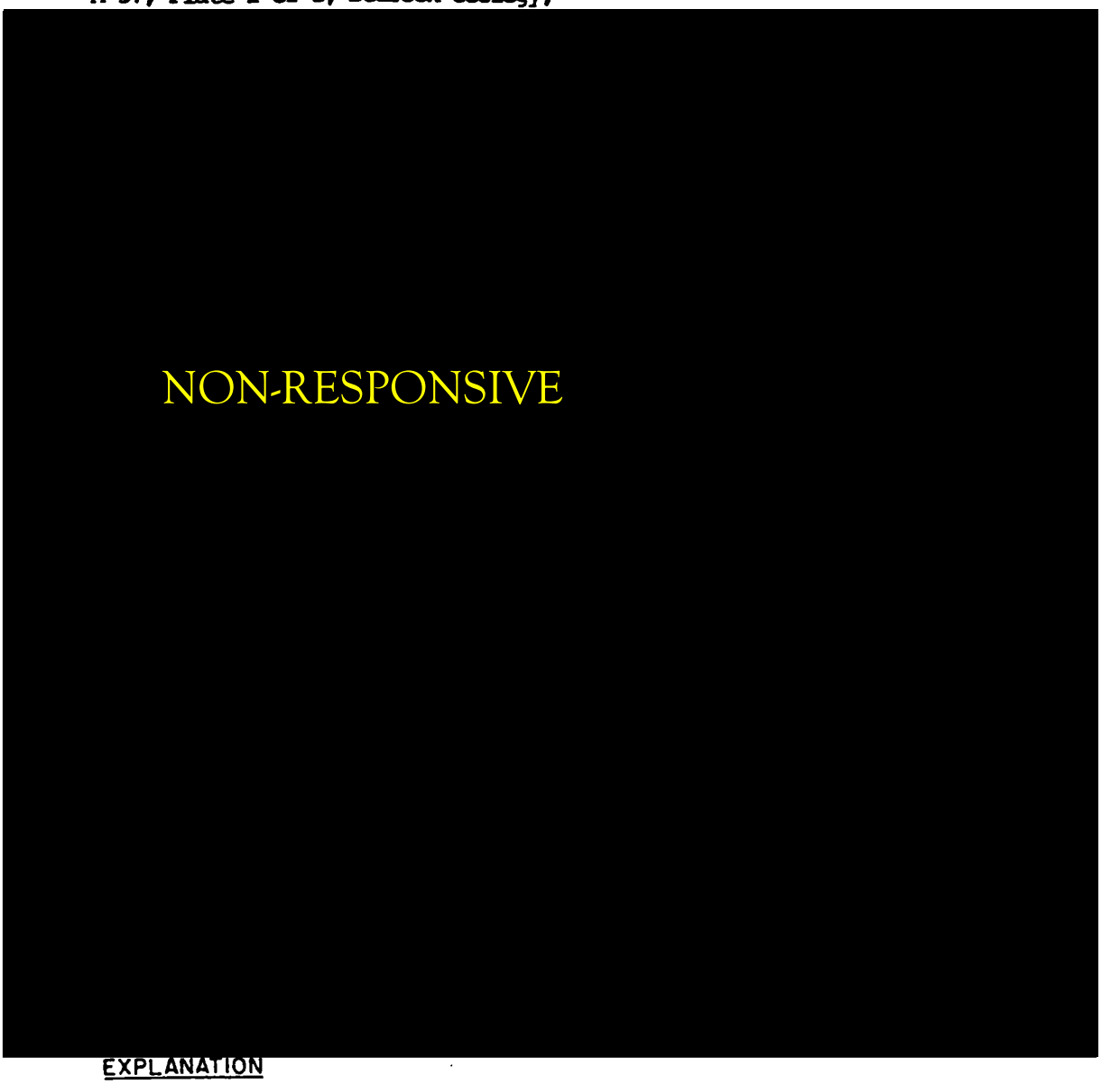

EXPLANATION

▲W33 LOCATION AND PROJECT WELL NUMBER

▲ OBSERVATION WELL COMPLETED IN ST. PETER AQUIFER

■ OBSERVATION WELL COMPLETED IN BASAL ST. PETER CONFINING BED

⊙ ST. PETER MONITORING WELLS CONSTRUCTED IN 1987

◉ WELL IN WHICH WATER LEVELS WERE MONITORED WITH A DIGITAL RECORDER DURING PART OF 1978-81

BEDROCK VALLEY/CONTACT WHERE UNCONSOLIDATED DRIFT DEPOSITS OVERLIE ST. PETER SANDSTONE

Fi ure 6-5 St. Peter Aquifer Well Locations and Bedrock Valley

When any of these documents are revised, the affected pages are reissued to all personnel listed as document holders with updated revision numbers and dates. Issuance of revisions is accompanied by explicit instructions as to which documents or portions of documents have become obsolete.

Control of, and accounting for documents generated during the course of the project is achieved by assigning the responsibility for document issuance and archiving. Table 6-4 lists the key documentation media for the project and corresponding responsible parties for issuance, execution and archiving.

6.3 Sample Control Procedures and Chain of Custody

In addition to proper sample collection, preservation, storage and handling, appropriate sample identification procedures and chain of custody are necessary to help insure the validity of the data.

6.3.1 Sample Identification

Sample labels shall be completed for each sample, using waterproof ink, unless prohibited by weather conditions. For example, a logbook notation would explain that a pencil was used to fill out the sample tag because a ballpoint pen would not function in freezing weather. The information recorded on the sample label includes:

Sample Number - Unique coded sample identification number as described below.

Time - A four-digit number indicating the military time of collection.

Sampler - Signature of person collecting the sample.

Remarks - Any pertinent observations or further sample description. The sample number includes three parts (source code, sampling point code, and date code) in the following sequence:

XXX-YYYYY-ZZZZZZ

TABLE 6-4
DOCUMENT CONTROL

Item	Issued By	Issued To	Archived By
Field Notebooks	Field Coordinator	Sampling Team	Field Coordinator
Field Equipment Calibration Forms	Field Coordinator	Sampling Team	Field Coordinator
Sample Logs	Field Coordinator	Sampling Team	Field Coordinator
Chain-of-Custody Forms	Lab Sample Custodian	Field Coordinator	Lab Sample Custodian
Sample Labels	Field Coordinator	Sampling Team	Lab Sample Custodian

XXX = Source Code

GAC Plant	= GAC
Mt. Simon-Hinckley Aquifer	= MSH
Ironton-Galesville Aquifer	= IGV
Prairie du Chien Jordan Aquifer	= PCJ
St. Peter Aquifer	= STP
Drift-Platteville Aquifer	= DPV

YYYYY = Sampling Point Code
Well identification as abbreviated in Tables 6-2 and 6-3

ZZZZ = Date Code
Month, day, year

Those samples which will be taken in accordance with this Plan for quality control purposes will be identified by appending to the sampling point codes the following:

Field blank = FB
Field duplicate = D
Matrix spike = MS
Matrix spike duplicate = MSD

As an example, a field blank sample taken for the Mt. Simon-Hinckley Aquifer, sampling point SLP11 on 1 January 1988 would be identified as follows:

MSH-SLP11FB-010188

During the sampling event, one sample will be taken per sampling point unless it is duplicated. Duplicate samples will be collected as specified in Tables 6-2 and 6-3. Those samples collected for matrix spike analysis will be selected at the time of sampling and labelled in the field.

Ater collection, identification, and preservation, the sample will be maintained under chain-of-custody procedures discussed below.

6.3.2 Chain-of-Custody Procedures

To maintain and document sample possession, chain-of-custody procedures will be followed. A sample is under custody if:

- It is in someone's possession, or
- It is in someone's view, after being in their possession, or
- It was in someone's possession and they locked it up to prevent tampering, or
- It is in a designated secure area.

Samples are accompanied by a Chain-of-Custody Record (Figure 6-6). When transferring the possession of samples, the individuals relinquishing and receiving will sign, date, and note the time on the record. This record documents sample custody transfer from the sampler, often through another person, to the analyst at the laboratory.

Minimum information recorded on the chain-of-custody record in addition to the signatures and dates of all custodians will include:

- Sampling site indentification
- Sampling date and time
- Identification of sample collector
- Sample identification
- Sample description (type and quantity)
- Analyses to be performed.

Samples will be packaged properly for shipment and dispatched to the appropriate laboratory for analysis, with a separate custody record accompanying each shipment. Shipping containers will be sealed for shipment to the laboratory. The method of shipment, courier name(s) and other pertinent information are entered in the "Remarks" box. Then tear off the last copy of the form and place the original and remaining copies in the container. After the container is closed, place the custody seals on the container.

Whenever samples are split with another laboratory, it is noted in the "Remarks" section. The note indicates with whom the samples are being split and is signed by both the sampler and recipient. If either party refuses a split sample, this will be noted and signed by both parties. The person relinquishing the samples to the facility or agency should request the signature of a representative of the appropriate party, acknowledging receipt of the samples. If a representative is unavailable or refuses to sign, this is noted in the "Remarks" space. When appropriate, as in the case where the representative is unavailable, the custody record should contain a statement that the samples were delivered to the designated location at the designated time.

Enseco - Rocky Mountain Analytical

4955 Yarrow Street
Arvada, Colorado 80002
303/421-6611 Facsimile: 303/431-7171

Attn: _____

CHAIN OF CUSTODY

No. 5001

SAMPLE SAFE™ CONDITIONS

1. Packed by: _____ Seal # _____
2. Seal Intact Upon Receipt by Sampling Co.: Yes No
3. Condition of Contents: _____
4. Sealed for Shipping by: _____
5. Initial Contents Temp.: _____ °C Seal # _____
6. Sampling Status: Done Continuing Until _____
7. Seal Intact Upon Receipt by Laboratory: Yes No
8. Contents Temperature Upon Receipt by Lab: _____ °C
9. Condition of Contents: _____

Enseco Client _____
Project _____
Sampling Co. _____
Sampling Site _____
Team Leader _____

Date	Time	Sample ID/Description	Sample Type	No. Containers	Analysis Parameters	Remarks

CUSTODY TRANSFERS PRIOR TO SHIPPING

Relinquished by: (signed)	Received by: (signed)	Date	Time
1			
2			
3			

SHIPPING DETAILS

Delivered to Shipper by: _____
Method of Shipment: _____ Airbill # _____
Received for Lab: _____ Signed: _____ Date/Time _____
Enseco Project No. _____

White and Pink Copies to Lab Yellow to Sampler SS-001

Figure 6-6 Sample Chain of Custody Record

6.3.3 Field Forms

In addition to sample labels and chain-of-custody forms, a bound field notebook will be maintained by the sample team leader to provide a daily record of significant events. All entries will be signed and dated. All members of the of the sampling team will use this notebook. The notebook will be kept as a permanent record.

6.4 Sampling Procedures - GAC Plant

Chain-of-custody forms will be completed and all samples shipped to RMAL's laboratory by overnight delivery on the same day they are collected.

Sampling points will be flushed for at least five minutes before collecting a sample. Each PAH sample will be collected in six one-liter amber glass bottles, which should be filled and capped in succession. PAH sample bottles will not be rinsed before being filled. The lids of all sample bottles will be taped using plastic adhesive tape after they are capped.

The GAC treated water samples will have to be collected from two sample taps -- one for each column (see Figure 6-7). This will be done by filling three one-liter bottles from the first column sample tap and then three more bottles from the second (six from each for duplicate samples). No notations distinguishing the two taps will be made on the labels. Only four PAH bottles will be extracted and the extracts composited for analysis.

Field blank samples will be prepared by transferring contaminant-free deionized water provided by RMAL into sample bottles in a fashion as closely similar to actual sample collection as possible. Field blank sample bottles will be filled, capped and taped in succession with individual bottles open to the atmosphere for an equal time as for actual process samples. Field blanks will be prepared in the area in which GAC treated water samples are collected.

Duplicate samples will be obtained by filling twelve 1-liter bottles at the sampling point by the procedure described above, splitting these into two groups of six bottles, and assigning a different sample number to each of the resulting six-bottle samples. All samples will be packed, cooled to a temperature less than $4^{o}C$, and shipped on the day they are collected.

The sampling team must recognize that great care is required to collect samples for part-per-trillion-level PAH analysis that are free from outside contamination. PAH compounds are present in cigarette smoke, engine exhaust and many petroleum derived oils, among other sources. There will be no smoking anywhere in the GAC treatment building on a day on which PAH samples are to be collected until the samples have been collected, sealed and packaged for shipment. Similarly, no vehicles will enter the GAC treatment building and the large access door will stay closed on sampling days. Disposable gloves will be worn when collecting, handling and packaging samples. Sample bottles will remain in closed shipping coolers until they are needed, and will be packaged and sealed for shipment as soon as possible after sampling.

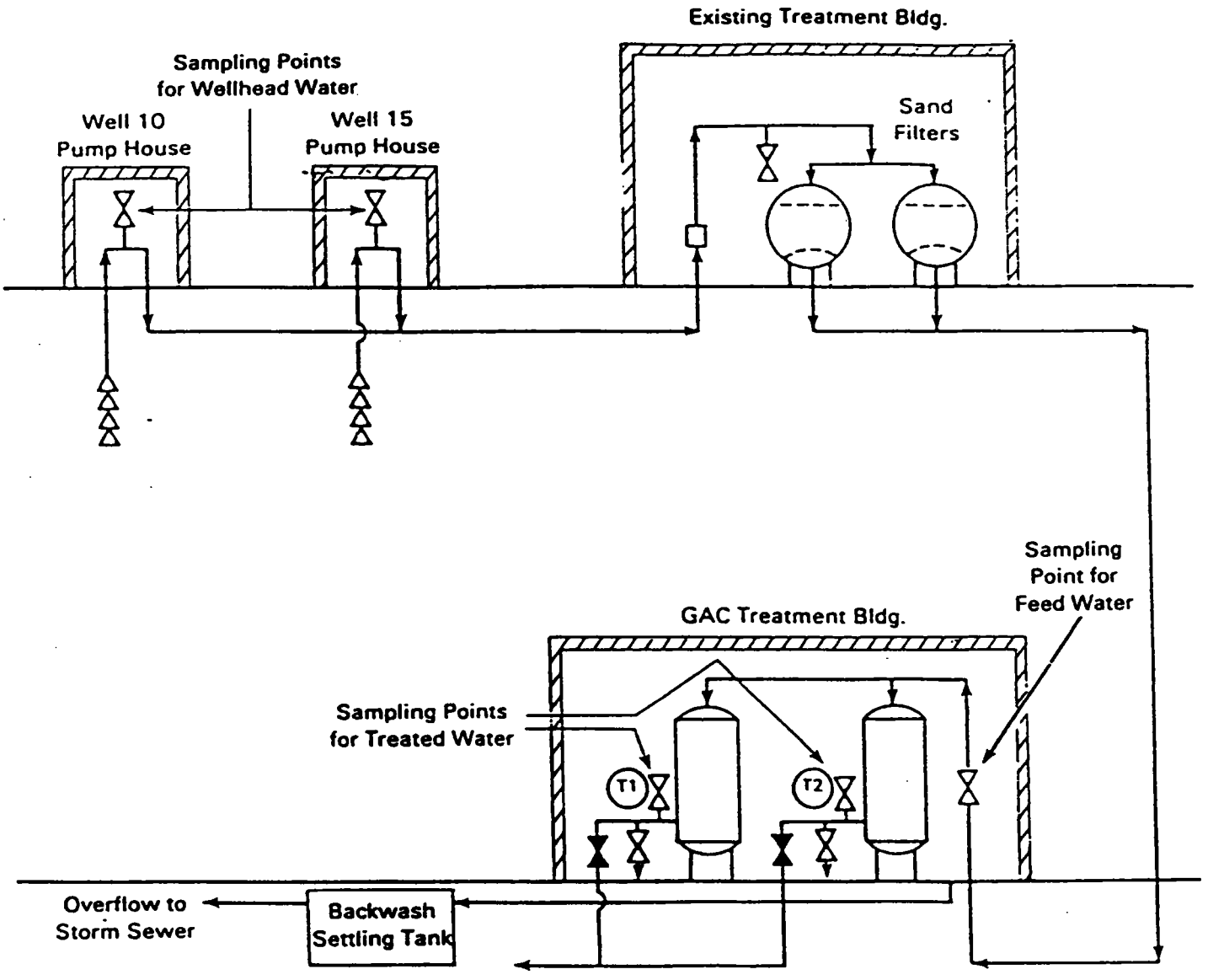

Figure 6-7 Sampling Locations

6.5 Ground-water Sampling and Water Level Measurements

Ground water samples will be collected and water level measured in accordance with the procedures outlined in this Plan. The wells involved in the monitoring program include municipal and commercial wells, piezometers and groundwater monitoring wells (see Table 6-3). Sampling procedures to accommodate the dimensions and configuration of each type of well are described below. Further details on well dimensions, water level measurements and sample acquisition strategies are given in the Site Management Plan.

The importance of proper sampling of wells cannot be over-emphasized. Even though the well being sampled may be correctly located and constructed, special precautions must be taken to ensure that the sample taken from that well is representative of the ground water at that location and that the sample is neither altered nor contaminated by the sampling and handling procedure. Sample collection will always proceed from the less contaminated sampling points to the monitoring wells containing progressively higher concentrations of PAH or phenolics.

6.5.1 Decontamination

The field decontamination procedure to be used on sampling equipment which comes into contact with groundwater samples is as follows:

- disassemble equipment, if applicable,
- high pressure, hot water steam clean, using potable water.

The laboratory decontamination procedure to be used on sampling equipment which comes into contact with groundwater samples is as follows:

- disassemble equipment
- rinse with methanol
- scrub with hot soapy water
- rinse three times with hot deionized water
- set on aluminum foil, dull side up, air dry
- bake for one hour at 200° C
- wrap with aluminum foil, dull side in

6.5.2 Field Blanks

Field blank samples will be prepared by transferring contaminant-free deionized water, provided by RMAL, into sample bottles in a fashion as closely similar to actual sample collection as possible. This will involve collecting samples through any non-dedicated sample equipment that is decontaminated between samples. Field blank sample bottles will be filled, capped and taped in succession with individual bottles open to the atmosphere for an equal time as for actual process samples. Field blanks will be prepared in the area where samples are being collected at a rate of one per day or where more than ten samples are collected in a day at a rate of one field blank per ten samples.

6.5.3 Sample Containers (See Table 6-5)

For PAH and Phenolics, 1 liter amber glass bottles will be used. Caps will be fitted with pre-cleaned Teflon liners. Six bottles are required for each Low Level PAH sample collected and ~~one~~ bottle for each Non-Criteria PAH sample two collected. One bottle is required for phenolics.

Bottles will be prepared as follows:

1. Wash bottles with hot detergent water.

2. Rinse thoroughly with tap water followed by three or more rinses with organic-free water.

3. Rinse with Burdick & Jackson quality redistilled acetone, followed by equivalent quality methylene chloride.

4. Allow to air dry in a contaminant free area.

5. Caps and liners must be washed and rinsed also.

   Bottles should be stored and shipped with the Teflon-lined caps securely fastened.

6.5.4 Sample Collection - Monitoring Wells and Piezometers

Because unanticipated or changed conditions may cause difficulty in the purging and sampling of the monitoring wells and piezometers, flexibility in the approach to sample retrieval is necessary. This Plan proposes that the sampling team be given latitude in the selection of purge/sample equipment and procedures necessary to complete the monitoring task.

Table 6-3 specifies that Prairie du Chien-Jordan Aquifer monitor well W70 be monitored, and that St. Peter Aquifer monitor wells W24 and W33 may be monitored. Each well is equipped with a dedicated submersible pump and it will be the responsibility of the sampling team to determine if the pump is operable. In the event the dedicated pump within any individual well is operable, well purging and sample retrieval tasks will be completed with the aid of the pump in conformance with parameter monitoring established herein. In the event the dedicated pump within any individual well is inoperable, the pump will be removed and purging/sampling procedures will be as established below.

Monitoring wells and piezometers not equipped with dedicated submersible pumps will be purged using a nondedicated submersible pump, suction pump or bailer. During the purging of each well, temperature, pH and specific conductance of the purge water will be monitored using a Hydrolab water quality monitor (or

TABLE 6-5
SAMPLE CONTAINERS, PRESERVATION PROCEDURES, AND
MAXIMUM HOLDING TIMES

Parameter	Containers[1]	Preservation[2]	Maximum Holding Time[3]
Water:			
PAH (PPT)	Six 1-liter amber glass bottles, Teflon-lined caps	cool, 4±2°C; protect from light	7 days (until extraction), 40 days after extraction
PAH (PPB)	Two 1-liter amber glass bottles, Teflon-lined caps	cool, 4±2°C, protect from light	7 days (until extraction), 40 days after extraction
Phenolics	One 1-liter amber glass bottle,	cool, 4±2°C	7 days (until extraction), 40 days after extraction

Ref: Federal Register Guidelines/Vol.49, No.209/Friday, October 26, 1984/p. 43260.

1 Matrix spike samples shall consist of the same matrix being analyzed, therefore double the normal volume when a related matrix spike sample is to be retrieved.

2 Sample preservation will be performed immediately upon sample collection.

3 Samples will be analyzed as soon as possible after collection. The times listed are the maximum times that samples may be held before analysis and still be considered valid.

equivalent). Readings will be taken once per well volume. Stabilization of these readings will indicate that purging is complete and sampling may commence. Upon completion of well purging, samples will be collected from each well using a stainless steel or teflon bailer and a new length of nylon or polyester rope. All nondedicated purging and sampling equipment will be decontaminated before use and between sampling points as described in Section 6.5.1.

Samples will be collected by filling each of the appropriate sample containers in rapid succession, without prerinsing the containers with sample. The bottle will be held under the sample stream without allowing the mouth of the bottle to come in contact with the bailer and filled completely, and the cap securely tightened. Bottles will be checked for air and if air is visible, the cap removed and more sample added. All sample labels will be checked for completeness, sample custody forms completed and a description of the sampling event recorded in the field notebook.

6.5.5 Sample Collection - Pumping Wells

At active pumping wells the sampling team will first determine that the wells have actually been pumping during the period preceding sampling. This information may be derived from inspecting flow recorders or from interviewing knowledgeable persons regarding the wells (water department employees, well owners, etc.). The information will be documented in the field notes of the sampling team.

Water level measurements will then be made, if practical. The normal operation of the well will not be interrupted for the purpose of measuring water levels. An electric tape will be used to measure water levels in pumping wells. Sampling will proceed by filling the required containers with water from the sampling tap as near to the well head as possible, and before any holding tanks or treatment is encountered.

If it can not be determined that a well has been pumping at some time during the 24 hour period preceding sampling, or if it is known the well was not pumping, then the well shall be purged until field measurements of temperature, pH, and specific conductance have stabilized after at least three well volumes have been removed from the well. These measurements, water levels, and the amount of water pumped will be recorded in the field notes.

6.6 Sample Preservation, Shipment and Storage

The samples will be iced or refrigerated at $4^{o}C$ from the time of collection until extraction. PAH's are known to be light sensitive; therefore, samples will be stored in amber bottles and kept away from prolonged exposure to light. All samples will be extracted within seven days of collection, and analysis completed within forty days following extraction.

Samples will be protected from breakage and shipped in coolers at a temperature of 4°C or less. An overnight carrier will be selected to insure delivery at the laboratory within 24-36 hours after collection.

Samples received at the laboratory will be checked for leakage and a notation made regarding sample temperature at time of receipt. All samples should be stored in an organic-free refrigerator at 4°C. Storage refrigerators will be kept locked to prevent unauthorized entry and to satisfy chain-of-custody requirements.

6.7 Field Measurement Equipment

All field measurement equipment will be controlled to ensure that measurements obtained are accurate and defensible. Table 6-6 summarizes the parameters to be monitored, the instruments to be used for each measurement, procedures including calibration and frequency, and quality control criteria (also refer to Appendix A, SOP 7320, Calibration and Operation of Hydrolab Water Quality Monitor).

In addition, these measurement devices will be issued through a formal equipment tracking system and operated by trained personnel.

6.8 Duplicate Samples

Duplicate samples will be collected by alternately filling sample bottles from the source being sampled. For six liter sample collection one bottle will be filled for the sample, then one bottle for the duplicate, then a second bottle for the sample and then a second bottle for the duplicate, etc. Duplicates will be taken for each analysis type and each sample type, at a rate of one duplicate sample being collected for each ten samples, with a minimum of one duplicate for any sample batch. There are two sample types for this program: GAC Plant treated water and groundwater. For purposes of fulfilling the 10% duplicate requirement, all the sampling points shown on Table 6-3 are the same sample type.

TABLE 6-6
FIELD MEASUREMENT EQUIPMENT QUALITY CONTROL

Device	Calibration	Routine Check Method	Routine Check Frequency	Routine Check Control Limits
pH Meter Hydrolab)	Standardize in three or more standard buffer solutions	Calibration check-analyze standard buffer solution	After every sample	±0.1 pH units
		Analyze duplicates	After every sample	±0.1 pH units
Conductivity Meter (Hydrolab)	Standardize using two or more KCL solutions	Calibration check-analyze standard KCL solution	1/10 samples	±1% of range being used
		Analyze duplicates	1/10 samples	±1% of range being used
NBS* Thermometer	Factory calibrated	Not required	Not required	±0.1° C
Water Level Measurement Device (Electric)	Factory calibrated	Not required	Not required	±0.01 Ft.

* NBS - National Bureau of Standards

7. SAMPLE CUSTODY

The St. Louis Park sampling program is a cooperative effort between the City and ENSR, whose responsibilities include sample retrieval, and RMAL, whose responsibilities include sample analysis. Proper sample handling and analysis is essential to the success of the study, therefore a formal sample custody procedure has been developed to insure the integrity of all samples. Sections 6.4 and 6.5 discuss field sampling aspects and Section 6.6 outlines procedures for sample preservation, shipment, and storage. This section covers quality related activities from receipt of samples at the RMAL analytical facilities through issuance of validated analytical data and the storage of data in the final evidence file.

7.1 Security and Recordkeeping

Samples entering the RMAL analytical facilities located in Arvada, Colorado, proceed through an orderly chain-of-custody sequence specifically designed to insure continuous integrity of both the sample and documentation.

Appendix A contains Standard Operating Procedures (SOP's) which address the following aspects of facility security and sample custody

- Building Security - SOP No. LP-RMA-0001
- Sample Log-in - LP-RMA-0003
- Use of Project Assignment Record - LP-RMA-0004
- Sample Receipt and Chain of Custody - SOP No. LP-RMA-0005

7.2 Final Evidence File

The final evidence (or data) files will be maintained for the period specified in the RAP. Evidence files will consist of all data necessary to completely reconstruct the analysis, and will consist of (at a minimum): all field documents, logs, project reports, raw data, continuing calibration checks, DFTPP tune, detection limits, chain of custody documentation, quality control data for blanks and matrix spikes, results forms, and a file custodian. In addition, the analytical report, which contains a brief discussion of the method and a more detailed narrative of any analytical issues is included in the package. RMAL will maintain these files in a secure, limited access area under the custody of the Director of Quality Assurance. RMAL maintains all GC/MS raw data files on tapes or other magnetic media for an indefinite period. This data will be available upon request.

8. CALIBRATION PROCEDURES

Calibration is required to ensure that the analytical system is operating correctly and functioning at the proper sensitivity to meet established detection limits. For this project calibration is required for the four analyses (Low Level, Non-Criteria, Extended, Phenolics). These four analyses are defined in Section 9 of this Plan.

The specific calibration requirements for each of these analyses are summarized in the subsections below.

8.1 Low-Level (ppt) Analysis

The calibration requirements are described in detail in the Standard Operating Procedure for ppt PAH analyses appended to this QAPP. The discussion below highlights the key aspects of the calibration requirements.

Prior to use of the method for low level analysis of PAH, a five-point response factor calibration curve must be established showing the linear range of the analysis.

A midpoint calibration standard is analyzed daily and the area of the primary characteristic ion is tabulated against concentration for each compound. The response factor (RF) for each compound listed in Table 8-1 is calculated.

These daily response factors for each compound must be compared to the initial calibration curve. If the daily response factors are within ±35 percent of the corresponding calibration curve value the analysis may proceed. If, for any analyte, the daily response factor is not within ±35 percent of the corresponding calibration curve value, the system is out of control and corrective action must be performed.

The quantitation mass ion, which represents the 100% abundance ion, is selected for quantitation and for the daily response factor measurement. The second ion, or confirmation ion, is used for confirmation of the identification. The daily response factor for the quantitation mass ion is compared to the initial calibration curve. During the analysis of the daily calibration standard the percent abundance of the confirmation ion is obtained. This percent abundance is used for identification purposes for samples analyzed during that day. The percent abundance values shown in Table 8-1 are typical values.

Mass tuning will be performed using the mass calibration compound FC43. Tuning will be performed to maximize the sensitivity of the mass spectrometer for the mass range of compounds being analyzed. In the FC43 spectra, the ion abundance of masses 131 and 219 are adjusted to a ratio of 1:1. These two ions are then maximized to be approximately 50 to 70% of the ion abundance of the base mass 69. This procedure maximizes the sensitivity of the instrument in the mass region of interest for the PAH analysis.

TABLE 8-1 TARGET COMPOUNDS AND KEY IONS
FOR LOW LEVEL PAH ANALYSES

CAS NO.	COMPOUND	QUANTITATION MASS ION	CONFIRMATION ION (% ABUNDANCE)
271-89-6	2,3-Benzofuran	118	90 (52)
496-11-7	2,3-Dihydroindene	117	118 (57)
95-13-6	1H-Indene	116	115 (108)
91-20-3	Naphthalene	128	102 (7)
4565-32-6	Benzo(B)Thiophene	134	89 (8)
91-22-5	Quinoline*	129	102 (20)
120-72-9	1H-Indole	171	90 (31)
91-57-6	2-Methylnaphthalene	141	115 (31)
90-12-0	1-Methylnaphthalene	141	115 (28)
92-52-4	Biphenyl	154	153 (35)
208-96-8	Acenaphthylene	152	151 (17)
83-32-9	Acenaphthene	154	153 (93)
132-64-9	Dibenzofuran	168	139 (40)
86-73-7	Fluorene	166	165 (90)
132-65-0	Dibenzothiophene	184	139 (19)
85-01-8	Phenanthrene	178	176 (19)
120-12-7	Anthracene	178	176 (19)
260-94-6	Acridine	179	178 (26)
86-74-8	Carbazole	167	166 (28)
206-44-0	Fluoranthene	202	200 (17)
129-00-0	Pyrene	202	200 (18)
56-55-3	Benzo(A)Anthracene*	228	226 (22)
218-01-9	Chrysene*	228	226 (26)
205-99-2	Benzo(B)Fluoranthene*	252	250 (22)
207-08-9	Benzo(K)Fluoranthene	252	250 (22)
192-97-2	Benzo(E)Pyrene	252	250 (35)
50-32-8	Benzo(A)Pyrene*	252	250 (26)
198-55-0	Perylene	252	250 (24)
193-39-5	Indeno (1,2,3-CD)Pyrene*	276	274 (25)
53-70-3	Dibenz(A,H)Anthracene*	278	279 (20)
191-24-2	Benzo(G,H,I)Perylene*	276	274 (25)
205-82-3	Benzo(J)Fluoranthene*	252	250 (22)

NOTE: The % abundance for the confirmation ion is a typical value. Although these ratios will vary, the relative intensities of confirmation ions must agree within plus or minus 20% between the calibration standard for any given day and the samples run on that day.

* Carcinogenic PAH as defined in Appendix A of the RAP.

The requirements above will be employed for all compounds in Table 8-1 with the exception of benzo(j)fluoranthene. An analytical standard is not available for this compound. The calibrated response of the closest eluting isomer, benzo(k)fluoranthene, will be used to establish a response factor. The quantitation ion, confirmation ion and percent abundance values for benzo(k)fluoranthene will also be used.

8.2 Non-Criteria Analysis

ppb

All non-criteria analyses will follow the calibration requirements described in the Contract Laboratory Program Statement of Work for semivolatiles (CLP SOW) dated 7/87. In summary, the SOW requires an initial verification that the mass spectrometer is tuned properly using decafluorotriphenyl phosphine (DFTPP). The SOW also requires an initial five-point calibration be performed for all compounds and that this calibration be verified by the analysis of a daily calibration standard.

The calibration requirements in the SOW are based on the determination of a diverse list of semivolatile organics. Calibration is verified on a daily basis by comparing the responses of a few select compounds, termed calibration check compounds (CCC). Only one of these compounds (acenaphthene) is a target PAH for this project. The response of another group of compounds, termed system performance check compounds (SPCC) are used to verify the analytical system is working properly. None of the SPCCs are target PAH for this project. Finally, the target PAH for this project contain compounds not measured under CLP protocols.

Accordingly, the procedures is the SOW for calibration have been modified to accommodate the differences in the monitoring lists. A calibration standard contains all of the analytes shown in Table 8-1 is used for both initial and continuing calibration in place of the CLP standard. The daily calibration is verified by comparing the response of all 32 compounds (not just a select few) to the response from the initial calibrations. The relative standard deviation (RSD) for each compound must be less than 35% or the system is out of control and corrective action must be performed. ?

The control limit for the daily calibration is based on the accuracy and precision objectives of this project and experience with this group of analytes. The limits in the CLP SOW, which is slightly more stringent, is based on a select group of compounds with extensive method performance data.

8.3 Extended Analysis

ppb ?

In addition to the compounds listed in Table 8-1, the compounds shown in Table 8-2 are required to be determined in the extended monitoring program. This extended list of compounds include phenols and other PAHs specified for this project.

TABLE 8-2
TARGET COMPOUNDS FOR EXTENDED ANALYSES

CAS NO.		
	A.	Other Carcinogenic PAH
195-19-7		benzo(c)phenanthrene
215-58-7		dibenz(a,c)anthracene
192-65-4		dibenzo(a,e)pyrene
189-64-0		dibenzo(a,h)pyrene
189-55-9		dibenzo(a,i)pyrene
57-97-6		7,12-dimethylbenz(a)anthracene
56-49-5		3-methylcholanthrene
	B.	Acidic Compounds Listed in EPA Method 625
108-95-2		phenol
95-57-8		2-Chlorophenol
88-75-5		2-nitrophenol
105-67-9		2,4-dimethylphenol
120-83-2		2,4-dichlorophenol
59-50-7		4-chloro-3-methylphenol
88-06-2		2,4,6-trichlorophenol
51-28-5		2,4-dinitrophenol
100-02-7		4-nitrophenol
534-52-1		4,6-dinitro-2-methylphenol
87-86-5		pentachlorophenol

Analyses for the extended list of compounds will be performed on the semivolatiles extract prepared as described in the CLP SOW.

Since most of the compounds on the extended monitoring list are also target compounds in the CLP protocol, the CLP calibration protocol will be followed.

The system is tuned with DFTPP and calibrated with the semivolatile compounds as specified in the CLP SOW. The compounds used to assess system performance and to verify the continuing calibration (SPCCs and CCCs) are used to verify that the system is in control. The control limits in the SOW are used. In addition, a separate calibration standard containing the PAH in Table 8-2 is used to establish response factors for these compounds.

8.4 Phenolics

method 420.2

A three-point calibration curve covering the linear range of the method will be analyzed prior to the analysis of any samples and with a minimal frequency of once per 12 hours.

9. ANALYTICAL PROCEDURES

9.1 Low Level Analysis

As specified in the Consent Decree, four types of analyses are to be performed as part of the RAP for this project. These four analyses are defined below, and the details of the specific analytical procedures are presented in subsequent subsections.

- Low Level: Refers to the determination of a specific list of 21 polynuclear aromatic hydrocarbons using GC/MS with operation in the selected ion monitoring (SIM) mode. The list of target PAH contains carcinogenic and non-carcinogenic compounds and is shown in Table 8-1 of the QAPP. The list includes 14 compounds which are not on EPA's priority pollutant, Appendix IX or Superfund target compound list. The analytical methodology is based on well known principles of GC/MS technology. Although there is no EPA method that embodies this technique for this class of compounds, methods developed for the measurement of polychlorinated dibenzodioxins (e.g., Methods 613 and 8280) are based on selected ion monitoring technology.

- Non-Criteria: The low level PAH method is designed to measure PAH at the sub-ppb level. At higher concentrations, the compounds can be measured under scanning GC/MS conditions. Since scanning GC/MS provides more reliable qualitative data, this method, termed "Non-Criteria PAH" is preferred for samples containing ppb concentrations of PAH. The method is based on the Contract Laboratory Program (CLP) protocol for semivolatile organics with the appropriate modifications to address the differences in the monitoring lists. ?

- Extended: Some samples are analyzed for the specific list of compounds shown in Table 8-2 of the QAPP using scanning GC/MS. This list, termed "extended" analyses, includes additional PAH, specific acid (phenolic) compounds and a provision for "identifying" unknown compounds. As in the non-criteria analyses, analyses are performed using CLP protocols with the appropriate modifications. ? ?

- Phenolics: Refers to the determination of "total phenols" using a colorimetric procedure. ?

A method has been developed for the analysis of selected target PAH and heterocycle compounds at the part per trillion level (ppt, ng/L) in water. The analysis is carried out by isolation of the target analytes by liquid-liquid extraction of the water sample with an organic solvent. Quantitation of the isolated target analytes is performed by gas chromatography/mass spectrometry (GC/MS) in the selected ion monitoring mode (SIM). The method is generally applicable for the measurement of any PAH or related compound. For this project, only those compounds listed in Table 8-1 will be determined.

In summary, a measured volume of sample is extracted with methylene chloride. Analysis of the concentrated extract is performed by gas chromatography/mass spectrometry using the selected ion monitoring scanning mode under electron impact ionization conditions. Specific details of this methodology can be found in Appendix B, Determination of Low Level (Part Per Trillion) PAH and Heterocycles in Water. This method is designed to analyze samples containing up to 600 ppt of an individual PAH. With dilution of the sample extract, the effective range of the method can be extended into the ppb range. However, sample dilutions may result in loss of information concerning recovery of surrogates. For this reason, an optional sample preparation technique is contained in the method. This optional technique can be used if historical information indicates that the target compounds are present in concentrations in excess of 600 ppt.

9.2 Non-Criteria Analysis

The selected target PAH and heterocycle compounds listed in Table 8-1 can be determined by GC/MS in the scanning mode at the ppb and higher concentrations. This analysis, termed non-criteria analyses, uses the methodology contained in the Contract Laboratory Program Statement of Work for semivolatiles dated 7/87 (CLP SOW). The only deviations from this SOW are as follows:

1. The calibration is performed as set forth in Section 8 of the QAPP.
2. The internal QC checks are set forth in Section 11 of this QAPP.
3. Data are reported only for those compounds listed in Table 8-1.

9.3 Extended Analysis

The target compounds listed in Table 8-2 are measured using the methodology contained in the Contract Laboratory Program Statement of Work (CLP SOW) for semivolatile organic date 7/87. The only deviations from this SOW are as follows:

1. The calibration is performed as described in Section 8 of the QAPP.

2. The only target compound in the analytical reports are those listed in Table 8-2.

9.4 Phenolics

Phenolics will be determined by Method 420.2 as published in the "Methods for Chemical Analysis for Water and Waste, EPA 600/4-79-020" (refer to Appendix B).

10. DATA REDUCTION, VALIDATION AND REPORTING

10.1 Data Reduction and Validation

All project data will be subjected to a three-tier process including review by operations, by the data review groups for inorganics and GC/MS and the final review by the project coordinator prior to its release. The review process has been developed to minimize errors associated with sample processing, sample analysis and data reporting and to ensure that information pertaining to a given sample is well documented.

Appendix A contains Standard Operating Procedures (SOP's) for laboratory data review. Refer to SOP No. LP-RMA-0002 for information relative to review policies and processes. In addition, the SOP's for the analytical methods contain the calculation techniques required to obtain reportable concentrations from the raw data.

10.2 Turnaround Time

In accordance with Section 3.2 of the RAP, RMAL has agreed to a 30 working day turnaround. The City, however, makes no enforceable commitment under the RAP except for a maximum of 7 days from sampling for extraction of organics and 40 days following extraction for analysis of organics. For non-organic analyses, the City makes no enforceable commitment under the RAP except to meet the recommended maximum analytical holding times.

10.3 Reporting/Data Deliverables

RMAL shall prepare summary reports and data packages in a format that mimics the format described in Exhibit B of Organic SOW 7/87 for the Contract Laboratory Program. Specifically, Form 1, SV-1 and SV-2 in Exhibit B of the CLP SOW will be changed to include the PAH list of parameters shown in Table 8-1 of the QAPP. Form II, SV-1 will show the surrogates for the PAH analysis. Form III, SV-1 will show the spike compounds for the PAH analyses. Form VI, SV-1 and SV-2 and Form VII, SV-1 and SV-2 will be altered to show just the target parameters shown in Table 8-1 of the QAPP. Finally, Form VIII, SV-1 and SV-2 will be modified to show the internal standards for the PAH method. In addition, in the low level PAH analyses, compounds which are determined to be present in the samples based on careful inspection of the data, but which do not meet the secondary ion confirmation criteria will be flagged with an asterisk (*). The reporting forms in Exhibit B will be modified to show the target lists of parameters, surrogates and spiking compounds for the low level PAH.

RMAL has determined the method detection limits for the part per trillion PAH analysis of water samples, utilizing GC/MS selected ion monitoring, according to the method described in Appendix B to Part 136 of the Friday, October 26, 1984 Federal Register, Vol. 49, No. 209 - Definition and Procedure for the Determination of the Method Detection - Revision 11.1. Table 10-1 lists the compounds, the observed concentrations of seven replicates spiked at 5 parts per trillion, the standard deviations and the method detection limits. RMAL has also determined the method detection limits for part per billion Phenolics according to Method 420.2 as published in the "Methods for Chemical Analysis for Water and Waste, EPA 600/4-79-020" (see Table 10-2).

These calculated method detection limits will be used in sample reporting as follows:

- Analytes detected at concentrations greater than or equal to the calculated method detection limits will be reported with no qualifiers.
- Analytes that are detected at concentrations less than the calculated method detection limits will be reported followed by a "J" qualifier which is used in the EPA Contract Lab Program (CLP) to indicate that a reported value is below the method detection limit.

The various items in the data package are listed below:

- Sample Traffic Reports or Chain-of-Custody
- Sample Data Summary Report Including:
  - Case narrative
  - Tabulated target compound results by fraction
  - Surrogate spike analysis results by fraction
  - Matrix spike/matrix spike duplicate results by fraction
  - Blank data by fraction
- Sample Data Package including:
  - Case narrative
  - Traffic reports
  - Raw data

The City will present reports in a manner consistent with the requirements of the RAP. In addition, data packages containing all elements listed above will be presented for up to 10 percent of the sample analyses completed. The EPA shall be responsible for identifying the specific sample analyses for which data packages will be provided.

Compound	Sample #1	Sample #2	Sample #3	Sample #4	Sample #5	Sample #6	Sample #7	Standard Deviation (s)	Method Detection Limit (3s) *
2,3-Benzofuran	19.4*	20.9*	18.0*	19.5*	20.3*	21.5*	16.6*	1.70*	5.1*
2,3-Dihydroindene	4.3	4.2	4.7	3.7	3.8	4.9	4.7	0.46	1.4
1H-Indene	4.4	4.2	4.6	3.9	4.1	4.7	4.6	0.30	0.9
Naphthalene	20.5*	21.0*	18.5*	20.3*	23.0*	23.5*	17.6*	2.15*	6.5*
Benzo(B)thiophene	3.6	3.5	3.9	3.4	3.3	3.8	4.1	0.29	0.9
Quinoline	4.7	4.0	4.1	3.7	3.3	4.4	4.1	0.45	1.4
1H-Indole	3.7	4.5	5.6	3.2	3.2	4.2	4.0	0.84	2.5
2-Methylnaphthalene	5.4	5.0	5.3	5.1	4.8	4.9	5.7	0.31	0.9
1-Methylnaphthalene	4.5	4.2	4.6	3.8	3.7	4.7	5.2	0.53	1.6
Biphenyl	17.9*	18.1*	16.4*	18.4*	18.1*	19.3*	15.0*	1.43*	4.3*
Acenaphthylene	3.9	3.6	4.6	3.7	3.5	4.4	4.5	0.46	1.4
Acenaphthene	4.2	3.7	4.7	3.5	3.5	4.1	4.1	0.43	1.3
Dibenzofuran	4.3	3.9	4.6	4.1	3.7	4.0	4.2	0.34	1.0
Fluorene	4.4	4.0	4.5	4.0	4.0	4.6	4.8	0.33	1.0
Dibenzothiophene	4.0	3.5	4.0	3.5	3.2	3.9	4.2	0.36	1.1
Phenanthrene	4.7	3.9	4.7	3.9	3.6	4.2	4.5	0.43	1.3
Anthracene	4.5	3.8	4.5	4.1	3.6	4.1	4.6	0.38	1.1
Acridine	4.1	4.3	4.9	4.1	3.8	2.4	2.3	0.98	2.9
Carbazole	4.5	3.2	4.8	3.5	3.9	3.1	3.8	0.64	1.9
Fluoranthene	4.5	3.8	4.7	3.9	3.6	4.4	4.7	0.45	1.4
Pyrene	4.3	3.7	4.4	3.9	3.4	4.2	4.7	0.45	1.4
Benzo(A)anthracene	4.6	3.6	4.0	3.6	3.3	5.3	5.3	0.83	2.5
Chrysene	4.3	3.3	3.7	3.3	2.9	5.1	5.3	0.94	2.8
Benzo(B)fluoranthrene	4.6	3.4	3.8	3.6	2.8	4.9	5.0	0.83	2.5
Benzo(K)fluoranthrene	4.1	3.2	3.5	3.2	3.2	4.9	4.8	0.76	2.3
Benzo(E)pyrene	4.9	3.8	4.1	3.3	3.5	4.9	4.4	0.64	1.9
Benzo(A)pyrene	4.5	3.2	3.8	3.2	2.9	4.8	4.5	0.76	2.3
Perylene	4.6	3.6	3.8	3.5	3.3	5.3	5.1	0.82	2.5
Indeno(1,2,3-CD)pyrene	4.5	3.4	3.4	2.9	3.0	4.5	4.2	0.69	2.1
Dibenz(A,H)anthracene **	4.2	3.5	3.6	3.1	3.3	4.6	4.1	0.54	1.6
Benzo(G,H,I)perylene	3.6	3.0	2.9	2.6	2.9	4.9	4.7	0.94	2.8

Note: Amount spiked = 5 ng/L.

* Data for 2,3-Benzofuran, Naphthalene and Biphenyl were obtained from previous detection limit study. Spike levels = 20 ng/L.

** Compounds co-elute

Figure 10-1 Method Detection Limit Report

TABLE 10-2

METHOD DETECTION LIMIT STUDY - TOTAL PHENOLICS

Sample #	Concentration Detected (mg/L)
1	0.0315
2	0.0340
3	0.0291
4	0.0315
5	0.0291
6	0.0291
7	0.0315

Calculated Standard Deviation = 0.0018

Calculated Method Detection Limit = 0.00579 mg/L
= 5.8 ug/L

10.4 Reporting Requirements for Samples Exceeding Advisory Levels or Drinking Water Criterion

For active drinking water wells, RMAL will notify the City of St. Louis Park by telephone, within 24 hours of completing an analysis, whenever a sample analysis is shown to exceed the following Advisory Levels or Drinking Water Criterion:

Parameter	Advisory Level	Drinking Water Criterion
Sum of Benzo(a)pyrene and Dibenz(a,h)anthracene*	3.0 ng/L*	5.6 ng/L
Total Carcinogenic PAH +	15 ng/L**	28 ng/L**
Total Other PAH	175 ng/L	280 ng/L

*Or the detection limit, whichever is largest.
**Different concentrations for additional carcinogenic PAH may be established in accordance with the procedure specified in Part D.1 of the Consent Decree.

+See Table 10-3.

10.5 Final Evidence Files

The final evidence (or data) files will be maintained for the period specified in the RAP. Evidence files will consist of all data necessary to completely reconstruct the analysis, and will consist of (at a minimum): all field documents, logs, project reports, raw data, continuing calibration checks, DFTPP tune, detection limits, chain of custody documentation, quality control data for blanks and matrix spikes, results forms, and a file custodian. In addition, the analytical report, which contains a brief discussion of the method and a more detailed narrative of any analytical issues is included in the package. RMAL will maintain these files in a secure, limited access area under the custody of the Director of Quality Assurance. RMAL maintains all GC/MS raw data files on tapes or other magnetic media for an indefinite period. This data will be available upon request.

TABLE 10-3

CARCINOGENIC PAH

benz(a)anthracene
benzo(b)fluoranthene
benzo(j)fluoranthene
benzo(ghi)perylene
benzo(a)pyrene
chrysene
dibenz(a,h)anthracene
indeno(1,2,3-c,d)pyrene
quinoline

11. INTERNAL QUALITY CONTROL

The internal quality control checks will include field blanks, method blanks, surrogate spikes, duplicate analyses, monitoring of internal standard area and matrix spike analyses. Each quality control check has a specific level of performance which will be reevaluated in an ongoing basis and amended as appropriate through mutual agreement of the Agencies and City. The specific details are presented below.

11.1 Low Level PAH and Non-Criteria Analyses

Internal quality control checks for the Low Level and Non-Criteria PAH analyses will consist of method blanks, surrogate compound analysis, matrix spike analysis, analysis of duplicate samples, and monitoring of internal standard areas.

11.1.1 Method Blank Analysis

A method blank consists of deionized, distilled laboratory water carried through the entire analytical scheme (extraction, concentration, and analysis). The method blank volume must be approximately equal to the sample volumes being processed.

Method blank analysis are performed at the rate of one per case*, each 14 calendar day period during which samples in a case are received, with every 20 samples of similar concentration and/or sample matrix, or whenever samples are extracted by the same procedure, whichever is most frequent.

Different control limits have been established relative to method blanks for the Low Level and Non-Criteria analyses since the target compounds in Table 8-1 are present as "laboratory contaminants" in method blanks at the ppt concentration level.

For the Low Level analyses, an acceptable method blank analysis must not contain any carcinogenic PAH in Table 8-1 at concentrations greater than or equal to the Method Detection Limits (MDL) in Figure 10-1 or any other PAH at a concentration greater than 5 times the MDL. For the Non-Criteria analyses, an acceptable method blank does not contain any PAH in Table 8-1 above 10 micrograms per liter. If the method blanks do not meet these criteria, the analytical system is out of control and the source of the contamination must be investigated and corrective measures taken and documented before further sample analysis proceeds.

* A case is a group or a set of samples collected from a particular site over a given period of time.

11.1.2 Surrogate Compound Analysis

As detailed in the SOP (Appendix B), the laboratory will spike all samples and quality control samples with deuterated PAH surrogate compounds. The surrogate compound will be spiked into the sample prior to extraction to measure individual sample matrix effects associated with sample preparation and analysis.

RMAL will take corrective action whenever the surrogate recovery is outside the acceptance criteria shown below. The corrective action is described in Section 15 of this QAPP.

Surrogate	Acceptance Criteria % Low-level	Non-criteria
Naphthalene-d8	14-108	25-175
Fluorene-d10	41-162	25-175
Chrysene-d12	10-118	25-175

11.1.3 Matrix Spike Analysis

The laboratory will spike and analyze 5% matrix spike samples. RMAL will spike seven representative compounds into water. These compounds and the spiking levels are listed below:

	PPT	Non-Criteria
Naphthalene	20 ng/L	50 ug/L
Fluorene	20	50
Chrysene	20	50
Indene	20	50
Quinoline	20	50
Benzo(e)pyrene	20	50
2-methyl naphthalene	20	50

The matrix spike criteria for data validity are as follows:

- The average of the percent recoveries for all compounds must fall between 20 and 150 percent.
- Only one compound can be below its required minimum percent recovery. These minimum percent recoveries are:
  1) 10% for chrysene
  2) 20% for all other compounds.

Corrective action will be performed if these criteria are not achieved as described in Section 15.

11.1.4 Duplicates

Percent difference between duplicates will be calculated for each detected compound.

11.1.5 Internal Standard Areas

The area of the internal standard will be monitored on each analysis. The area from the daily calibration standard will be used to set a daily acceptance criteria. If the internal standard areas in samples changes by more than a factor of two (-50% to + 100%) from the daily standard, corrective action must be performed.

11.2 Extended Analysis

The internal quality control checks for extended analyses will consist of surrogate spikes, matrix spikes, method blanks, etc. as described in the CLP SOW for semivolatile organics. The acceptance criteria are as defined in the SOW.

11.3 Phenolics

The internal quality control checks for phenolics will mimic those for inorganics in the CLP program and will include the analysis of a method blank, a laboratory check standard, a spike sample, and a duplicate sample. The specific details for each of these QC checks are summarized below.

11.3.1 Blanks

A "Preparation Blank" is analyzed with each batch of 20 samples. This blank is carried through the entire procedure, including the distillation step. Additional blanks, termed "Initial Calibration Blank" (ICB) and "Continuing Calibration Blank", (CCB) are also analyzed. These blanks are used only to evaluate the determinative step and are not distilled. They are analyzed at a frequency of one ICB per 20 samples and one CCB per 10 samples.

An acceptable blank must not contain phenolics above 5 micrograms per liter. If any of the blanks contain phenolics above 5 micrograms per liter, the system is out of control and corrective action must be performed.

11.3.2 Laboratory Check Standard

The calibration is verified by the analysis of two different laboratory check standards. An "Initial Calibration Verification" (ICV) check standard is analyzed at a frequency of one per 20 samples. This check is carried through the entire procedure, including the distillation step. The measured value from this check standard must be between 75% and 125% of the true value.

A "Continuing Calibration Verification" (CCV) check standard is analyzed at a frequency of one per 10 samples. This standard is used to verify the determinative step only. The measured value must be between 85% and 115% of the true value.

If the measured values from the check standards are not within control limits, the system is out of control and corrective action must be performed.

11.3.3. Matrix Spikes

As for the other tests, matrix spikes will be performed at a frequency of 5%. The spike level is 50 micrograms per liter. The recovery of the matrix spike must be between 75% and 125%. Corrective action is performed if these criteria are not achieved.

11.3.4 Duplicates

Duplicate analyses are performed at a frequency of 5%. Corrective action is performed if the relative difference from the duplicate analysis is greater than 70%.

12. PERFORMANCE AND SYSTEM AUDITS

Enseco/RMAL will be subjected to USEPA Performance and System Audits for approval/disapproval specific to the requirements of this program. The Contract Project Management Section (CPMS) of the Central Regional Laboratory (CRL) of Region V is responsible for the audits.

Enseco laboratories participate in a variety of federal and state certification programs, (including the EPA CLP), that subject each of the laboratories to stringent system and performance audits on a regular basis. A system audit is a review of laboratory operations conducted to verify that the laboratory has the necessary facilities, equipment, staff and procedures in place to generate acceptable data. A performance audit verifies the ability of the laboratory to correctly identify and quantitate compounds in blind check samples submitted by the auditing agency. The purpose of these audits is to identify those laboratories that are capable of generating scientifically sound data. Enseco is certified to perform environmental analyses under programs administered by the EPA, U.S. Army, U.S. Navy, and over 15 states. The most current list of Enseco certifications is available upon request.

In addition to external audits conducted by certifying agencies or clients, Enseco regularly conducts the following internal audits:

- Monthly systems audits conducted by the Division Quality Assurance (QA) Director.
- Quarterly audits conducted by the Corporate VP of QA.
- Special audits by the Divisional QA Director or Corporate VP of QA when a problem is suspected.

Enseco laboratories also routinely analyze internal check samples as described below:

- Laboratory QC check samples (LCS, SCS, and blanks) are analyzed at a frequency equal to at least 10% of the total number of samples analyzed (see Section 9).
- An independent commercial firm is contracted to provide all laboratories with blind check samples on a monthly basis. The results of the analyses of these samples are evaluated by the VP of QA.

The results of these internal check samples are used to identify areas where additional training is needed or clarification of procedures is required.

13. PREVENTIVE MAINTENANCE

Since instrumental methods of analysis require properly maintained and calibrated equipment, the operation and maintenance of modern analytical instrumentation is of primary importance in the production of acceptable data. In order to provide this data, RMAL subscribes to the following programs:

- maintenance agreements/service contracts with instrument manufacturers
- laboratory preventive maintenance program

13.1 Service Contracts

Analytical equipment utilized by RMAL laboratory personnel for this project are covered by maintenance agreements with the instrument manufacturers. These manufacturers provide for both periodic "preventive" service calls as well as the non-routine or emergency calls.

13.2 Instrument Logbooks

Individual instrument logbooks are maintained for each piece of equipment and located near the instrument. General information contained in the logbooks include:

- Inventory information:
  equipment name, model number, serial number, manufacturer, date of acquisition, original cost
- Service tasks and intervals:
  cleaning, calibration, operation based on the manufacturer's recommended schedule, and previous laboratory experience
- Service record:
  date of breakdown, date of return to service, downtime, problems, repairs, cost of repairs, who performed the repairs, parts required, etc.
- calibration/performance checks
- daily operational notes

Analysts are referred to manufacturers' operating manuals for specific procedures to be followed in the operation and/or maintenance of the individual instruments.

Laboratory preventive maintenance includes any tasks that can be performed in-house, i.e., systematic cleaning of component parts as recommended in the instrument manual. If problems cannot be corrected by laboratory personnel, the instrument service representative is contacted and a service call requested to correct the problem.

13.3 Field Equipment

All field equipment shall be inspected daily for damaged or missing pieces, which will be replaced as needed.

13.3.1 Thermometer

The field workers will handle the thermometer with care to preserve its measurement integrity. After each use, the thermometer will be rinsed with de-ionized or potable water, wiped dry, and returned to its protective case.

13.3.2 Water Level Measurement Tape

Before each use, the battery will be checked using the equipment's element test function, and replaced if necessary. The tape and probe will be wiped clean and rinsed with de-ionized or potable water after each use.

13.3.3 Hydrolab

The hydrolab instrument shall be maintained in accordance with the manufacturer's requirements. In particular, the battery will be checked daily, and replaced if necessary. The instrument shall be operated and stored at temperatures above freezing, to avoid damaging the instrument. After each use, the instrument will be rinsed with potable or de-ionized water, wiped dry and returned to its storage container. The sonde unit must be covered with its protective, water-filled cap.

14. SPECIFIC PROCEDURES TO ASSESS DATA PRECISION, ACCURACY AND COMPLETENESS

A quality control program is a systematic process that controls the validity of analytical results by measuring the accuracy and precision of each method and matrix, developing expected control limits, using these limits to detect errors or out-of-control events, and requiring corrective action techniques to correct, prevent or minimize the recurrence of these events. The quality assessment techniques described below consist of the techniques used to assure that statistical control has been achieved.

The accuracy and precision of sample measurements are influenced by both external and internal factors. External factors or errors are those associated with field collection and sample transportation. Internal factors or errors are those associated with laboratory analysis. External factors are defined briefly in Section 14.1. Internal factors are defined in Section 14.2.

14.1 External Components

The results for quality control samples taken in the field represent the best estimates of accuracy and precision for the samples, since these values reflect the entire process from samples collection through sample analysis. The frequency of these control samples is described in Sections 5 and 6. Below is a brief description of the information provided by each of these control samples:

- Field blank - provides an estimate of bias based on contamination; includes effects associated with sample preservation, shipping, preparation, and analysis.

- Field collected samples or duplicates - independent samples collected at the same point in space and time. These give the best measurement of precision for sample collection through analysis.

14.2 Internal Components

The results of quality control samples created in the laboratory represent estimates of analysis and precision for the preparation and analysis steps of sample handling. This section describes the quality control-type information provided by each of these analytical measurements. The frequency of each of these measurements is discussed in Sections 5 and/or 11.

- Surrogates - provide an estimate of bias based on recovery of similar compounds, but not the compounds analyzed, for each sample, preparation and analysis.

- Internal standard - an analyte that has the same characteristics as the surrogate, but is added to the sample extract just prior to analysis. It measures bias or change in instrument performance from sample to sample, incorporating matrix effects associated with the analysis process only.

- Matrix spikes - the matrix spike is added prior to preparation and analysis. The analyte used is the same as that being analyzed and usually is added to a selected few samples in a batch of analyses. It incorporates matrix effects associated with the laboratory analysis.

- Method blanks - provide an estimate of bias based on contamination.

14.3 Calculation Techniques

The quality assessment procedures described above require calculations of relative percent difference (duplicate analyses) and percent recovery (matrix and surrogate spikes). The techniques for performing these calculations are described below.

- Precision - is the degree to which the measurement is reproducible. Precision is assessed by duplicate measurements by calculating the Relative Percent Difference (RPD) between duplicate measurements. The RPD is calculated as follows:

$$RPD = \frac{|D_1 - D_2|}{(D_1 + D_2)/2} \times 100$$

where: RPD = relative percent difference

D_1 = first sample value

D_2 = second sample value (duplicate)

- Accuracy - is a determination of how close the measurement is to the true value.

  The determination of the accuracy of a measurement requires a knowledge of the true or accepted value for the signal being measured. Accuracy may be calculated in terms of percent recovery as follows:

$$\text{Percent Recovery} = \frac{X}{T} \times 100$$

where:

X = the observed value of measurement

T = "true" value

- Completeness - is a measure of the amount of valid data obtained from a measurement system compared with the amount that was expected to be obtained under correct normal conditions.

To be considered complete, the data set must contain all QC check analyses verifying precision and accuracy for the analytical protocol. In addition, all data are reviewed in terms of stated goals in order to determine if the data base is sufficient.

When possible, the percent completeness for each set of samples is calculated as follows:

$$\text{Completeness} = \frac{\text{valid data obtained}}{\text{total data planned}} \times 100\%$$

- Comparability - expresses the confidence with which one data set can be compared to another data set measuring the same property. Comparability is ensured through the use of established and approved analytical methods, consistency in the basis of analysis (wet weight, volume, etc.), and consistency in reporting units (ppm, ppb, etc.).

15. CORRECTIVE ACTION

Corrective actions are required whenever an out-of-control event or potential out-of-control event is noted. The investigative action taken is somewhat dependent on the analysis and the event.

Laboratory personnel are alerted that corrective actions may be necessary if:

- QC data are outside the warning or acceptable windows for precision and accuracy;
- Blanks contain target analytes above acceptable levels;
- Undesirable trends are detected in spike recoveries or RPD between duplicates;
- There are unusual changes in detection limits;
- Deficiencies are detected by the QA department during internal or external audits or from the results of performance evaluation samples; or
- Inquiries concerning data quality are received.

Corrective action procedures are often handled at the bench level by the analyst, who reviews the preparation or extraction procedure for possible errors, checks the instrument calibration, spike and calibration mixes, instrument sensitivity, and so on. If the problem persists or cannot be identified, the matter is referred to the laboratory supervisor, manager and/or QA department for further investigation. Once resolved, full documentation of the corrective action procedure is filed with the QA department.

Generally, out-of-control events or potential out-of-control events are noted on an out-of-control event form (see Figure 15-1). This form is part of the data package and, thus, must be completed prior to data approval. If an out-of-control event does occur during analysis, for instance, a surrogate recovery falls out the expected range, the analyst must describe on this form: the event, the investigative and corrective action taken, and the cause of the event, and notify the Laboratory Quality Control Director. In some cases, investigation of an out-of-control event will reveal no problems. In such cases, only the event and the investigative action is recorded. If an out-of-control event is discovered during data package review, the Laboratory Quality Control Director notifies the supervisor for corrective action.

15.1 Low-Level PAH and Extended Analyses

15.1.1 Surrogates

As discussed in Section 11.1.2, corrective action will be performed whenever the surrogate recovery is outside the following acceptance criteria:

QC Lot _____

Associated Samples _____

PROBLEM: (Briefly decribe problem) _____

Analyst:
Date:

- -

RESULTS/CONCLUSIONS of the Investigation:

Analyst:
Supervisor:
Date:

- -

CORRECTIVE ACTIONS (including follow-up)

Supervisor:
QA Approval:
Date:

Figure 15-1 Warning/Out-of-Control Form

Surrogate	Acceptance Criteria % Low-Level	Non-criteria
Naphthalene-d8	14-108	25-175
Fluorene-d10	41-162	25-175
Chrysene-d12	10-118	25-175

The following corrective action will be taken when required as stated above:

a) Check calculations to assure there are no errors;

b) Check internal standard and surrogate solutions for degradation, contamination, etc., and check instrument performance;

c) If the upper control limit is exceeded for only one surrogate, and the instrument calibration, surrogate standard concentration, etc. are in control, it can be concluded that an interference specific to the surrogate was present that resulted in the high recovery and this interference would not affect the quantitation of other target compounds. (The presence of this type of interference can be confirmed by evaluating the chromatographic peak shapes and ion intensities of the surrogates.)

d) If the surrogate could not be measured because the sample required a dilution, no corrective action is required. The recovery of the surrogate is recorded as D with the note surrogate diluted out.

e) Reanalyze the sample or extract if the steps above fail to reveal a problem. If reanalysis of the extracts yields surrogate spike recoveries within the stated limits, then the reanalysis data will be used. Both the original and reanalysis data will be reported.

15.1.2 Matrix Spikes

The matrix spike criteria for data validity are as follows:

- The average of the percent recoveries for all compounds must fall between 20 and 150 percent.

- Only one compound can be below its required minimum percent recovery (10%).

If the matrix spike criteria are not met, the matrix spike analysis will be repeated. If the subsequent matrix spike analysis meets the criteria, the data will be considered valid. Both matrix spike and surrogate spike recoveries will be used in assessing quality assurance/quality control for RMAL's analytical work.

15.1.3 Blanks

If target compounds are detected in the method blank above the MDL but less than 5 times the MDL the corrective action will consist of flagging the data and investigating the source of the problem to implement a corrective action for future work. If the concentration of a compound in the method blank exceeds five times the MDL, additional corrective action, including but not limited to, reanalysis of the blank and reanalysis of the samples may be required.

The relative concentration of compounds in both the samples and the blank are assessed as part of this corrective action. The results of these activities are documented in the narrative.

15.2 Other Corrective Actions

These sections discuss corrective actions which will be taken in the event that a sample or sample extract is lost or destroyed during shipment, storage or analysis, or in performance and system audits.

15.2.1 Samples

In order to minimize the possibility of sample destruction during shipment, six 1-liter bottles will be taken for all low-level (ppt) samples. For all samples, field blanks, matrix spikes, and matrix spike duplicates, subsequent extraction and analysis will be conducted on four intact 1-liter bottles. All field blanks will be collected in duplicate. One field blank will be analyzed with the sample set and the duplicate will be extracted and held. In the event that the field blank is lost during analysis or invalidated, the duplicate field blank will be analyzed and reported. Additional sample matrix will be required for matrix spike/matrix spike duplicate analyses.

If less than four liters of a sample remains after shipment and storage for analysis, the Program Manager will be notified and another sample will be collected and shipped to the laboratory for analysis. The analysis report for the sample batch containing the affected sample will clearly note in the discussion section that a replacement sample was taken.

15.2.2 Sample Extracts

If a sample extract is broken or lost during analysis, the Program Manager will be notified and will be responsible for determining the need for replacing the lost sample. The analysis report for the sample batch containing the affected sample will clearly note in the discussion section the action taken.

15.2.3 Quality Control Samples

If a method blank, or matrix spike is lost or broken during analysis, a replacement QC sample will be sampled and analyzed. The analysis report will clearly note that a replacement QC sample was analyzed.

If a field blank is lost or broken during shipment, storage, or analysis, its duplicate will be analyzed. The analysis report for the sample batch associated with the field blank will clearly note the occurrence in the discussion section.

15.2.4 Performance and System Audits

Each system audit is immediately followed by a debriefing, in which the auditor discusses his findings with the laboratory representatives. The debriefing serves a two-fold purpose. First, laboratory management is afforded an early summary of findings, which allows them to begin formulating corrective strategies, and second, the auditor has a chance to test preliminary conclusions and to correct any misconceptions before drafting his report.

The systems audit report (which may or may not contain performance audit findings) is first issued in draft to the Laboratory Quality Control Director. The QC Director distributes the draft to the Laboratory Director and appropriate supervisors to solicit comments and/or rebuttals. These responses are forwarded, in writing, to the auditor. The auditor makes revisions to the draft, on the basis of these responses, at his discretion. Any points of disagreement between the QA department and the laboratory organization are resolved through discussion before the final report is issued. Written responses to the draft report are attached to the final report as an appendix.

Final audit reports are issued to project management and to corporate management. Items requiring corrective action are documented on a Corrective Action Request Form addressed to the project manager. One copy is retained by QA upon issuance. The project manager receives the original and one copy. When satisfactory progress has been achieved on each requested action, the project manager or designee enters descriptions of actions and results on the form, then retains the copy and returns the original to QA to close the loop.

16. QUALITY ASSURANCE REPORTS TO MANAGEMENT

Executing and administering an effective QA program in a large and complex laboratory system demands the skills of a highly qualified staff. The organizational structure of Enseco's Quality Assurance Group (Fig. 16-1) provides a disciplined national management network which oversees and regulates all laboratory QA functions.

Enseco's Quality Assurance Group is headed by Kathleen A. Carlberg, Corporate Vice President of Quality Assurance, who reports directly to the Enseco Executive Committee and to the Chairman of the Board. As principal architect of Enseco's QA program, Ms. Carlberg has charted a rigid course to monitor and control laboratory operations. This involves the intricate process of developing QA manuals, QC protocols, training programs, Standard Operating Procedures (SOP's), uniform statistical data, interlaboratory and intralaboratory performance evaluation studies, and internal auditing programs. Ms. Carlberg is responsible for the administration and implementation of the QA program at all Enseco laboratories.

Laboratory QA activities are specifically designed to fulfill the requirements of both the individual laboratory and Enseco. Directing these activities as Division Director, Mark J. Bollinger, Ph.D. works closely with the laboratory Quality Assurance Director, Gary Torf, who enforces and monitors the program.

Because a QA program undergoes its most stringent test at the laboratory level, Laboratory QA Officers hold a cornerstone position in the organizational structure. Enseco QA Officers are highly skilled analytical scientists, knowledgeable in all aspects of laboratory operations. Their responsibilities include diagnosing quality defects and resolving problems with the analytical system; conducting performance evaluation studies, in-house audits, and walk-throughs; performing statistical analyses of data; auditing spike sample results; enforcing chain-of-custody procedures; assisting in the development of QA manual, SOPs and QC protocols; conducting QA training programs; and maintaining extensive records and archives of all QA/QC data.

Laboratory QA Officers report to both the laboratory president and to Ms. Carlberg. They also interface with one another in a peer evaluation and auditing system that encourages assistance and feedback, problem analysis, and collaboration on ways to improve laboratory performance.

In conjunction with the Laboratory QA Department, laboratory vice presidents, directors, and managers are responsible for a subset of QA activities, and work closely with supervisors to evaluate daily laboratory functions.

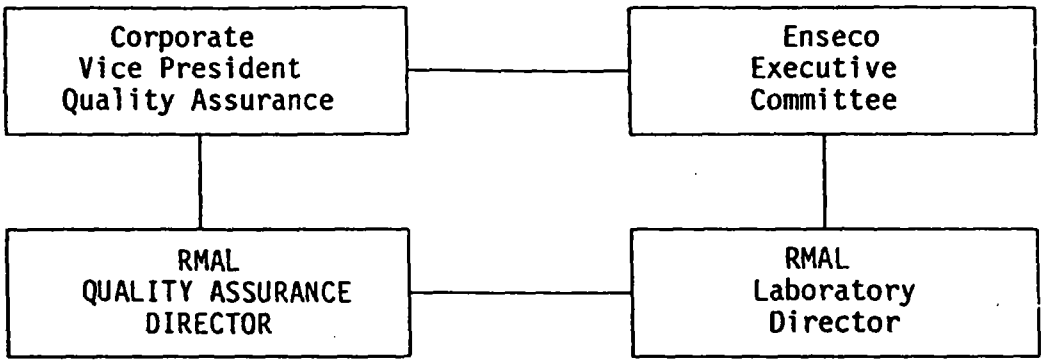

FIGURE 16-1 ENSECO QUALITY ASSURANCE GROUP ORGANIZATION CHART

The reporting system is a valuable tool for measuring the overall effectiveness of the QA program. It serves as an instrument for evaluating the program design, identifying problems and trends, and planning for future needs. Divisional QA Directors submit extensive monthly reports to the VP of QA and the Divisional Director. These reports include:

- The results of the monthly systems audit including any corrective actions taken;
- Performance evaluation scores and commentaries;
- Results of site visits and audits by regulatory agencies and clients;
- Performance on major contracts, (including CLP);
- Problems encountered and corrective actions taken;
- Holding time violations; and
- Comments and recommendations.

In addition, on a weekly basis, a summary of the 5% QA audit of reported data is sent to the Corporate QA Office.

The VP of QA submits weekly reports to the CEO and monthly report to the Enseco Management Committee and each Divisional Director. These reports summarize the information gathered through the laboratory reporting system and contain a thorough review and evaluation of laboratory operations throughout Enseco.

APPENDIX A

STANDARD OPERATING PROCEDURES

QUALITY ASSURANCE BRANCH

NOV 15 1988

ENVIRONMENT SERVICES DIVISION

INDEX OF STANDARD OPERATING PROCEDURES

SOP NUMBER	SUBJECT	NO. OF PAGES
SOP 7320	Calibration and Operation of Hydrolab Water Quality Monitor	8
LP-RMA-0001	Building Security	2
LP-RMA-0002	Laboratory Data Review	12
LP-RMA-0003	Sample Log-In	8
LP-RMA-0004	Use of Project Assignment Record	29
LP-RMA-0005	Sample Receipt and Chain of Custody	7

STANDARD OPERATING PROCEDURE
(REFER TO QAPP SECTION 6.7)

Title: Calibration and Operation of Hydrolab Water Quality Monitor

Date: 1st Qtr 198
Number: SOP 7320
Revision: 1

1.0 Applicability

This Standard Operating Procedure (SOP) provides basic instructions to be employed for the field operation of Hydrolab digital multimeters (Model Nos. 4041 and 8000). Hydrolabs are used for field measurement of water-quality parameters.

2.0 Responsibilities

The field team is responsible for ensuring that the Hydrolab unit is in proper operating condition prior to use in the field. All system-calibration checks are the responsibility of the field team.

3.0 Materials

- Hydrolab Operation and Maintenance Instruction Manual
- Hydrolab Sonde unit, battery pack and surface unit
- Hydrolab calibration-cup
- Two Fisher-brand laboratory potassium chloride (KCl) standard solutions (known conductivity at 25°C)
- Two freshly prepared pH buffer solutions. Generally pH 7.0 and pH 4.0 or 10.0 are used.
- Distilled or de-ionized water (approximately two liters)
- Chemical-free paper towels
- Screwdrivers (as supplied in the Hydrolab Accessory Kit)

4.0 Procedures

The Hydrolab provides simultaneous measurement of four water quality parameters; 1) dissolved oxygen, in mg/l, 2) temperature, in °C; 3) pH, in standard units, and 4) conductivity, in umhos/cm (uS/cm). The panel switch on the front of the indicator unit controls which parameter is being measured and read-out.

The display is read in the following manner; temperature, pH and dissolved oxygen are read out directly. For example, a temperature of 21.8°C will be displayed as 21.8. A dissolved oxygen (D.O.) or pH reading of 8.1 will be displayed at 08.1. Conductivity is read out directly on the 2k scale. If the 20k scale is required to measure higher conductivity the number that is displayed will need to be

ENVIRONMENTAL RESEARCH & TECHNOLOGY, INC. 696 VIRGINIA ROAD, CONCORD, MASSACHUSETTS 01742

1284b (12/78)

multiplied by 10. In the 200k scale the reading will be multiplied by 100. For example, suppose the sample being measured has a conductivity of 1527 uS/cm. Using the 2k scale, the display will show 1527 (direct read-out). Using the 20k scale the display will show 153 (153 x 10 = 1530 uS/cm). Using the 200k range the display will show 015 (015 x 100 = 1500 uS/cm). Only the Hydrolab model 4041 offers the three scale measurement. The Hydrolab model 8000 is restricted to measurement of conductivity within the range of 0-2000.

4.1 Hydrolab Calibration

A complete calibration check should be performed before going to and after returning from a field sampling/water quality measurement activity. The calibration procedures should be carried out in a controlled environment such as a laboratory, but a field office or closed-in shelter may also be used.

At least one hour prior to calibration, take the following preparatory steps:

1) Remove the "Storage-Cup" from the Sonde Unit.

2) Remove the protective guard from the dissolved oxygen sensor.

3) Install the "Calibration-Cup" on the Sonde Unit and fill to the brim with distilled water.

4) Seal the Calibration Cup with the soft plastic cap and store the sonde unit, calibration standards, and the distilled water at constant room temperature for at least one hour in order to bring the various sensors, temperature compensating elements, and the calibration solutions into thermal equlibrium (within a few degrees).

All of the calibration controls are located on the front panel of the Indicator Unit. Adjustments, if necessary, should be made in the following manner:

1) Remove the appropriate seal-screw for the parameter being adjusted.

2) Insert a small screwdriver through the access hole and adjust the calibration control in the direction which brings the reading into agreement with the value of the standard solution being employed.

3) Replace the seal-screw.

A RINSE STEP will be used several times during the calibration procedure. It is to be performed in the following manner: Fill the calibration cup halfway with de-ionized or distilled water. Snap on the soft plastic cap; shake the sonde unit for ten seconds and then pour out the water. Repeat twice more using fresh de-ionized or distilled water. Remove the cup and shake as much of the rinse water as possible from the electrodes.

4.1.1 Dissolved Oxygen Calibration

The Dissolved Oxygen system is the first to be calibrated since the water that has been stored in the calibration cup is used to maintain control of the temperature inside the cup. The calibration standard is either a water sample of a known D.O. concentration (determined in the laboratory by the Winkler or iodemtric method in accordance with Standard Methods for the Examination of Water and Wastewater, 15th Edition, APHA-AWWA-WPCF, 1980 or water-saturated air at the temperature inside the calibration cup. The following procedures are for the water-saturated air method for D.O. calibration.

Invert the Sonde Unit and remove the soft plastic cap. Pour off enough water to bring the level to just below the D.O. membrane- retainer O-ring. With a clean paper towel or tissue blot any moisture from the D.O membrane. Cover the calibration cup mouth with one of the hard plastic caps provided in the Accessory Kit. This will keep drafts from blowing on the membrane. Do not seal the cup with the plastic cap, because that could cause a partial-pressure change in the cup. Wait approximately 5 minutes, or until the reading is stable, then switch to the TEMPERATURE position and record the temperature reading. Refer to Table 1 for the correct oxygen concentration at this temperature. Since the table values refer to concentrations at Standard Pressure it will be necessary to correct the value for local barometric pressure. This should be done in the following manner:

Correct D.O. Setting = (Local Barometric Pressure/760mm) x (Table value at Cup Temperature)

EXAMPLE: If T = 28.5°C and Local Barometric Pressure = 800mm,

Correct D.O. Setting = (800mm/760mm) x (7.6 mg/l)
= 8.0 mg/l

0888J

If a barometer is not available, the equivalent pressure may be estimated from Table 2 which relates atmospheric pressure with elevation above mean sea level. Therefore, the approximate atmospheric pressure at an altitude of 2000 feet, for example, would be: Local Atmospheric Pressure = 705mm Hg.

Adjust the Dissolved Oxygen calibration control until the proper value (rounded to nearest tenth) is displayed. Pour our the water; and then follow with a RINSE STEP.

4.1.2 pH Calibration

Calibrating the pH system requires the use of two Fisher-brand pH laboratory buffer solutions. Depending upon the application, either pH 4.0 or pH 10.0 is used in addition to pH 7.0. Invert the sonde unit and fill the calibration cup with fresh pH 7.0 buffer solution. Switch to "pH", and wait approximately 5 minutes for thermal equilibrium. Then adjust the pH calibration control until 7.0 is displayed on the read-out.

Pour out the 7.0 buffer and repeat the RINSE STEP. Invert the sonde unit and screw on the calibration cup; fill with 10.0 or 4.0 buffer. After approximately 5 minutes, adjust the pH "Slope" control until either 10.0 or 4.0 (as appropriate for the buffer being used) is displayed on the read-out. Pour out the buffer and repeat the RINSE STEP <u>Two Times</u>

4.1.3 Conductivity Calibration

After the second RINSE STEP, take a clean paper towel or tissue, and blot most of the moisture in the electrode area so that the standard will not suffer dilution.

Install a clean calibration cup and invert the sonde unit. The conductivity system is calibrated using at least two prepared KCl standard solutions with a known conductivity at 25°C. From Table 3, select two standard solutions with values of approximately one-third and two-thirds of the range you are most likely to encounter in the field. For example, if you are going to be working in fresh water (0-2K scale) you would want to use a 0.01M standard and a 0.005M standard. Select the <u>more concentrated</u> of the two standards and pour it slowly down the side of the calibration cup until full. When the reading is stable, adjust the conductivity calibration control until the display matches

the value listed in Table 3. Empty the calibration cup and repeat the RINSE STEP Two Times. Pour in the second standard. Check the reading on the Display. It should be correct within ± 1% of the range being used. For example, if the 0-2K scale is used, the reading for the second standard should be correct within ± 20 uS/cm of the true value. Pour out the standard solution. Perform a RINSE STEP.

4.1.4 Temperature Calibration

The temperature system is factory calibrated and is accurate to ± 0.2°C. No calibration adjustment is provided. A periodic check of the temperature system against an NBS-traceable thermometer should be performed as a verification.

4.2 Final Preparation

Turn the system off and disconnect the system components. Replace all rubber dust caps. Remove the Calibration Cup from the Sonde Unit and replace the protective guard on the dissolved oxygen electrode. Fill the Storage Cup with tap water and install onto the Sonde Unit. The system is now calibrated and ready for field use.

4.3 Field Operation

Remove the Storage Cup from the calibrated sonde unit and install the guard or the optional sample circulator. Connect the system components. Lower the sonde unit into the water (sideways, if possible) and shake it to dislodge air bubbles trapped in the conductivity cell block. Release the sonde unit and lower it to sample depth. Wait until the readings stabilize (D.O. is the best indicator) and then record the value for each parameter. Repeat at new depths or locations.

When using for ground water sampling, pour/place a sample of ground water into the Storage Cup and attach it to the sonde so that all nodes are submerged.

Check the battery voltage occasionally; charge or change batteries if the level drops below 10.5 volts. DO NOT charge the battery routinely after each day's use. Doing so may shorten the life of the battery. Use the battery until the voltage level drops to between 10.5 and 11.0 volts. At this point put the battery on charge for 24 hours.

TABLE 1

DISSOLVED OXYGEN SATURATION VALUES IN DISTILLED WATER AT 760 mm Hg

Temp. (°C)	DO (mg/l)	Temp (°C)	DO (mg/l)
0.0	14.6	15.5	9.9
0.5	14.4	16.0	9.8
1.0	14.2	16.5	9.7
1.5	14.0	17.0	9.6
2.0	13.9	17.5	9.5
2.5	13.7	18.0	9.4
3.0	13.5	18.5	9.3
3.5	13.3	19.0	9.2
4.0	13.1	19.5	9.1
4.5	13.0	20.0	9.0
5.0	12.8	20.5	8.9
5.5	12.6	21.0	8.8
6.0	12.5	21.5	8.8
6.5	12.3	22.0	8.7
7.0	12.1	22.5	8.6
7.5	12.0	23.0	8.5
8.0	11.8	23.5	8.4
8.5	11.7	24.0	8.3
9.0	11.6	24.5	8.2
9.5	11.4	25.0	8.2
10.0	11.3	25.5	8.1
10.5	11.1	26.0	8.0
11.0	11.0	26.5	8.0
11.5	10.9	27.0	7.9
12.0	10.8	27.5	7.8
12.5	10.6	28.8	7.7
13.0	10.5	28.5	7.6
13.5	10.4	29.0	7.6
14.0	10.3	29.5	7.5
14.5	10.2	30.0	7.4
15.0	10.0	30.5	7.4

TABLE 2

Site Elevation (Feet above mean sea level)	Approximate Mean Barometric Pressure (mm Hg)
1000	733
1500	720
2000	705
2500	694
3000	680
3500	669
4000	656
4500	644
5000	632
5500	620
6000	609
6500	598
7000	586
7500	575
8000	564
8500	554
9000	543
9500	533
10000	523

TABLE 3

CONDUCTIVITY CALIBRATION STANDARDS

Conducitivies of Potassium Chloride Solutions at 25°C M.W. = 74.555			Conductivity Reading on Hydrolab Display for Given Range Setting (uS/cm)		
Conc.	Grams KCl/L	uS/cm	(0-2K)	(0-20K)	(0-200K)
0.0005	0.03728	73.9		-	-
0.001	0.07456	147.0	147	-	-
0.002	0.1491	292.0	292	-	-
0.005	0.3728	717.8	718	-	-
0.01	0.7456	1.413K	1413	141	-
0.02	1.491	2.767K	---	277	-
0.05	3.728	6.668K	---	667	-
0.1	7.456	12.90K	---	1290	129
0.2	14.911	24.82K	---	---	248
0.5	37.278	58.64K	---	---	586
1.0	74.555	111.9K	---	---	1119

NOTES:

(1) Two conductivity standards are recommended for each range setting (boxed-in values). Calibration adjustments will be made first with the higher concentration and then with the lower concentration.

(2) Single dashes indicate ranges which are not recommended for calibration checks.

(3) The Hydrolab model 8000 is restricted to conductivity readings between 0-2000 µS/cm (0-2k) scale), therefore conductivity readings and thus calibration solutions within the 0-20k and 0-200k ranges will not apply.

Enseco

STANDARD
OPERATING
PROCEDURE

Subject or Title: BUILDING SECURITY - REFER TO QAPP SECTION 7		Page 1 of 2
SOP No.: LP-RMA-0001	Revision No.: Original	Effective Date: 12/9/87

Supersedes:

1. Purpose:

The purpose of building security is to guarantee data security and confidentiality for the client as well as providing analytical data which is legally defensible.

2. Policies:

RMAL's security policy includes controlled access to the building, testing areas and data files, confidentially agreements with all personnel, identification badges for all personnel, electronic security and fire alarm systems, and a security guard. All visitors are also assigned visitor badges and are accompanied by RMAL staff during their stay in the facility.

3. Safety Issues: Not Applicable

4. Procedure:

Building Security

a. All exterior doors to the facility will remain locked at all times with the exception of the front entrance.
b. During the hours of 7:00 a.m. to 6:00 p.m., the front entrance or main reception area is controlled by the receptionist and secured by locked entries. The alarm system is not activated during this time period.
c. During the hours of 6:00 p.m. to 7:00 a.m., the front entrance is controlled by security guard. All persons entering or leaving the facility will be recorded by the security guard. The alarm system is activated during this time period to prevent all other exterior doors from being usable, including sample receiving and the patio doors.

Prepared by: [signature]	Date:
Management Approval: [signature]	Date: 12/10/87
QA Officer Approval: Robert C Hanisch	Date: 12/9/87

d. Sample receiving during the hours of 6:00 p.m.to 7:00 a.m. is permitted only with the assistance of the security guard.

Personnel Identification

a. All employees and visitors are required to wear security badges at all times while on the premises of all ENSECO divisions.
b. The personnel administrator is responsible for issuing a picture I.D. badge to an employee on the employee's first day of employment. Each employee is responsible for his/her badge. Additionally, each employee will be required to sign a "Confidentiality Agreement" which is included in the employee's personnel file.
c. The receptionist is responsible for issuing a badge to each visitor to the facility. Visitors must request a badge from the front office of the division they visit, sign the visitor log and must be accompanied by an ENSECO employee before access to any building will be allowed.

Building Alarm System

a. While it is not anticipated that employees will have to set or disarm the alarm system, it is important that employees understand the procedure. Unless used correctly, the alarm will go off and the Arvada Police Department will be called.
b. The procedure is confidential information and can be obtained from the Personnel Department.

5. Responsibilities:

a. It is the responsibility of each employee to maintain confidentiality of all clients data.
b. The Personnel Department is responsible for issuing employee identification badges and having signed "Confidentiality Agreements" in each employee's personnel file.
c. The receptionist is responsible for issuing visitor badges and for visitor sign-in during normal business hours. The security guard is likewise responsible for visitor and employee comings and goings between the hours of 6:00 p.m. and 7:00 a.m.
d. Employees escorting visitors are responsible for ensuring that visitation procedures are followed and that data confidentiality has not been compromised.

6. Comments:

STANDARD
OPERATING
PROCEDURE

Subject or Title: Laboratory Data Review - REFER TO QAPP SECTION 10.1		Page 1 of 12
SOP No.: LP-RMA-0002	Revision No.: Original	Effective Date: 12/9/87
Supersedes: -		

1. Purpose

All laboratory data will be subjected to a rigorous data review process prior to its release to the client. The review process has been developed to minimize errors associated with sample processing, sample analysis and data reporting and to ensure that information pertaining to a given sample is well-documented. The process consists of a three-level review whereby results generated for a specific project are evaluated to ensure that

- project is complete;
- precision, accuracy and detection limits are met;
- raw data interpretation is correct;
- all calculations are correct;
- contractual requirements are met; and,
- all information is well documented for archival purposes.

Enseco/RMAL uses a computerized Laboratory Information Management System (LIMS), as well as a variety of custom software programs designed to perform calculations, check results, generate reports, and to ensure data integrity and security. Whenever possible, historical client-specific data may aid in the review process as an additional check on generated results.

2. Policies

All project data will be subjected to a three-tier review process including review by operations, the data review group for inorganics, GC/MS, and chromatography and the final review by the project or client managers. Data will not be released to the client until the review process is completed.

Prepared by: Allen J. Medine, Ph.D.	Date: December 9, 1987
Management Approval: Paul Webb	Date: 12/10/87
QA Officer Approval: Robert E. Hamisch	Date: 12/10/87

3. Safety Issues

There are no direct safety issues which are of concern for the data review process. As with other non-analytical activities, caution should always be exercised when performing data review functions in the laboratory. For example, discussing problems with analysts, examining original samples, checking preparation aliquots will require review personnel to be in the laboratory or in appropriate storage areas. A review of safety concerns for all of these areas shall be implemented.

4. Procedure

The data review framework is essentially the same for the metals, non-metals, GC/MS and chromatography groups. The differences between each groups procedure are due to analysis differences, data entry and data correction software developed for LIMS. The data review process consists of three levels (LEVEL 1, LEVEL 2 and LEVEL 3). The general framework for the laboratory review process is shown in Figure 1.

A. LEVEL 1 REVIEW

The LEVEL 1 REVIEW begins at the analytical (bench) stage where LEVEL 1 review is primarily a self-review of all information generated during the analysis. During the analytical test, the analysts have much information concerning the precision, accuracy and problems. The intent of the data review program is to take advantage of this condition by review of all analytical details generated by the analyst and subsequent approval of the test results and QC by the analysts immediate supervisor. Specifically, the functions of the analyst and supervisor are as follows:

ANALYST:

1. Review Prep Lab Notes - Preparation lab notes are to be reviewed to determine if there were anomalies observed which may affect the analysis for certain parameters.

2. Review Special Instructions - For certain projects, the Client may have specified certain modifications to a standard test, analysis using a custom test, project specific QC, or special preparation of the sample.

3. Record All Necessary Information - While this may be considered more of an operations or analytical method concern, proper documentation of the analysis, in sufficient detail to allow re-creation of the analysis, is essential for an effective, efficient data review program and to permit development of a sound data archive program. An important part of data recording is to reveal whether

the test proceeded according to the Analytical Method SOP and that deviations from the method, anomalies during analysis, or that decisions concerning re-analysis are well-documented.

4. Check All Calculations - Errors frequently occur during calculations for standard curves, dilution factors, unit conversions, or extrapolations from instrument response to appropriate concentrations. The analysts will check ALL calculations, or verify data entry into software designed to perform calculations, examine results for agreement with expected results (i.e. order of magnitude or better) and indicate that calculations were reviewed on the LEVEL 1 REVIEW CHECKLIST.

5. Provide Data and QC Summary - Summaries of parameter concentrations and QC data generated are to be provided to the supervisor along with raw data (bench sheets, chromatograms, etc.) for supervisor approval of the analytical results.

6. Provide Out of Control/Anomally Sheet - Information regarding out of control situations or anomalies is necessary for review personnel to re-create the analysis when there are questions concerning the data which has been generated during the analysis. Holding time violations are to be clearly indicated along with the appropriate reasons for the violation.

7. LEVEL 1 REVIEW CHECKLIST - The function of the checklist is to indicate that the above items have been considered in the analysis. The LEVEL 1 REVIEW CHECKLIST is shown in Figure 2. There are more detailed items which are considered during the analysis and the review procedure by both analysts and the immediate supervisor in the GC/MS, GC, Metals and Inorganic Groups. Much of this information can be found on the LEVEL 2 CHECKLIST's. For example, in metals analysis using graphite furnace analysis, the analysts and supervisor will examine instrument standardization criteria (absorbance for standards,etc.), dilution factors, linear range compliance, detection limit adjustment and whether the Method of Standard Additions was required.

SUPERVISOR:

It is recognized that the analyst supervisors are not a part of the data review group. However, the supervisors are directly responsible for the analytical performance of the various analyst and, as such, are an integral part of the review process. The main functions of the supervisors are to review analysis as soon as possible and 1) accept analysis or 2) suggest re-analysis. As part of

the LEVEL 1 REVIEW process, supervisors will perform the following tasks:

1. Review analysis package for QC, reasonable results, holding tie violations and general acceptance of analysis. It is very important that re-analysis decisions be made at this level.

2. Signify approval on LEVEL 1 REVIEW CHECKLIST

3. Approval of data entry into data base management system

4. Schedule data entry (applicable to inorganics analysis at this time only).

It will be the responsibility of the supervisor to review and approve (or disapprove) the analysis on a daily basis. It will not be acceptable for supervisors to allow their review packages to stack up while other tasks are being performed. The review process depends on a continual flow of information through the the various levels. To meet turnaround times and other constraints of a commercial laboratory, it is essential for supervisors to provide a timely review of data generated by the analysts.

B. LEVEL 2 REVIEW: DATA REVIEW GROUPS

At the present time, separate data review groups exist in the inorganics division, the GC/MS division and the Chromatography division. A thorough review of the project data base takes place within the data review groups. There are numerous items which are common to each divisions review procedure. Each review group has developed a separate checklist to aid each reviewer in specifics related to the analytical tests. In addition, the reviewers in each group possess sufficient experience with the analyses conducted by the division to allow a comprehensive assessment of the precision and accuracy of the data generated.

The LEVEL 2 REVIEW is considered to be a peer review of the analytical data and review of project specific requirements. At this stage of the review, a complete check of the tests assigned to a project is made against the project data base to assess project completion. Additionally, the preparation lab notes, bench sheets, QC forms and anomally sheets are reviewed in detail to ensure that raw data has been interpreted correctly, that detection, precision and accuracy criteria are met, that the information is well documented for archival purposes, and that contractual requirements are also met.

Each data review group will evaluate the project data with respect to the LEVEL 2 REVIEW checklists. If any re-analysis is required at this stage, the decision is documented along with other project specific data. The LEVEL 2 REVIEW CHECKLISTS for each group are shown in Figures 3-5. The completion of the LEVEL 2 REVIEW is indicated on the checklists by the appropriate signature.

The reviewers will also provide information which is used by the report preparation personnel to prepare the final project report. Reviewers should provide comments on unusual or inconsistent results, anomalies, subcontractor data, and the extent of any necessary data qualification. Reviewers are to also assemble the complete package for report generation, including the above comments and raw data, when requested.

Following the completion of the review by the peer reviewers, the complete package will be examined by the data review supervisor. Supervisors will provide additional review of comments, anomalies, data qualification, and relationships between parameters, when appropriate. Approval of the LEVEL 2 REVIEW by the supervisor is also indicated on the LEVEL 2 REVIEW CHECKLIST.

The supervisors will also check the file for completeness, address comments from reviewers, and spot check results for reasonableness. The supervisors will also develop revisions to the data review SOP, provide training to data reviewers, assist development of computer knowledge-based review software and provide a continued evaluation of data review procedures.

At the completion of the review process for each division, the supervisor will change the project completion status in LIMS from status 4 to 7. Altering the project status in this way allows management to effectively move projects through the laboratory as rapidly as possible.

C: LEVEL 3 REVIEW: CLIENT MANAGERS

The last review of project data takes place at the client manager level. This review is directed at the results obtained, the clients needs, overall project results across analytical divisions, special instructions, analysis problems, the extent of data qualification. Client managers are not responsible for numerical errors, wrong analysis dates and other information which is the responsibility of LEVEL 1 and LEVEL 2 REVIEW.

5. Responsibilities

LEVEL 1 REVIEW

The operations supervisors are directly responsible for the approval of the analysis and the LEVEL 1 REVIEW CHECKLIST. The analysts are responsible for the analyst items on the checklist and being aware of what takes place during LEVEL 2 REVIEW.

LEVEL 2 REVIEW

The peer reviewers in each data review group (inorg., GC/MS and chromatography) are responsible for the detailed review of all project information as indicated on the LEVEL 2 REVIEW CHECKLIST. The data review supervisor is responsible for a brief examination of the project data and comments, additional comments appropriate for the final report, training reviewers, and developing review procedures to be used for the LEVEL 1 and LEVEL 2 REVIEW.

LEVEL 3 REVIEW

The client managers are responsible for ensuring that the client's needs have been met, that the data appears reasonable and that contractual requirements have been met.

6. Comments

For the review process to be effective in correcting problems and improving data generated in the laboratory, it is essential that reviewers inform operations supervisors and client managers on a regular basis of the problems which have been identified during the review process. Review checklists or written memos would be an effective means for alerting various personnel on problems which could be avoided or should be corrected.

LABORATORY DATA REVIEW FRAMEWORK

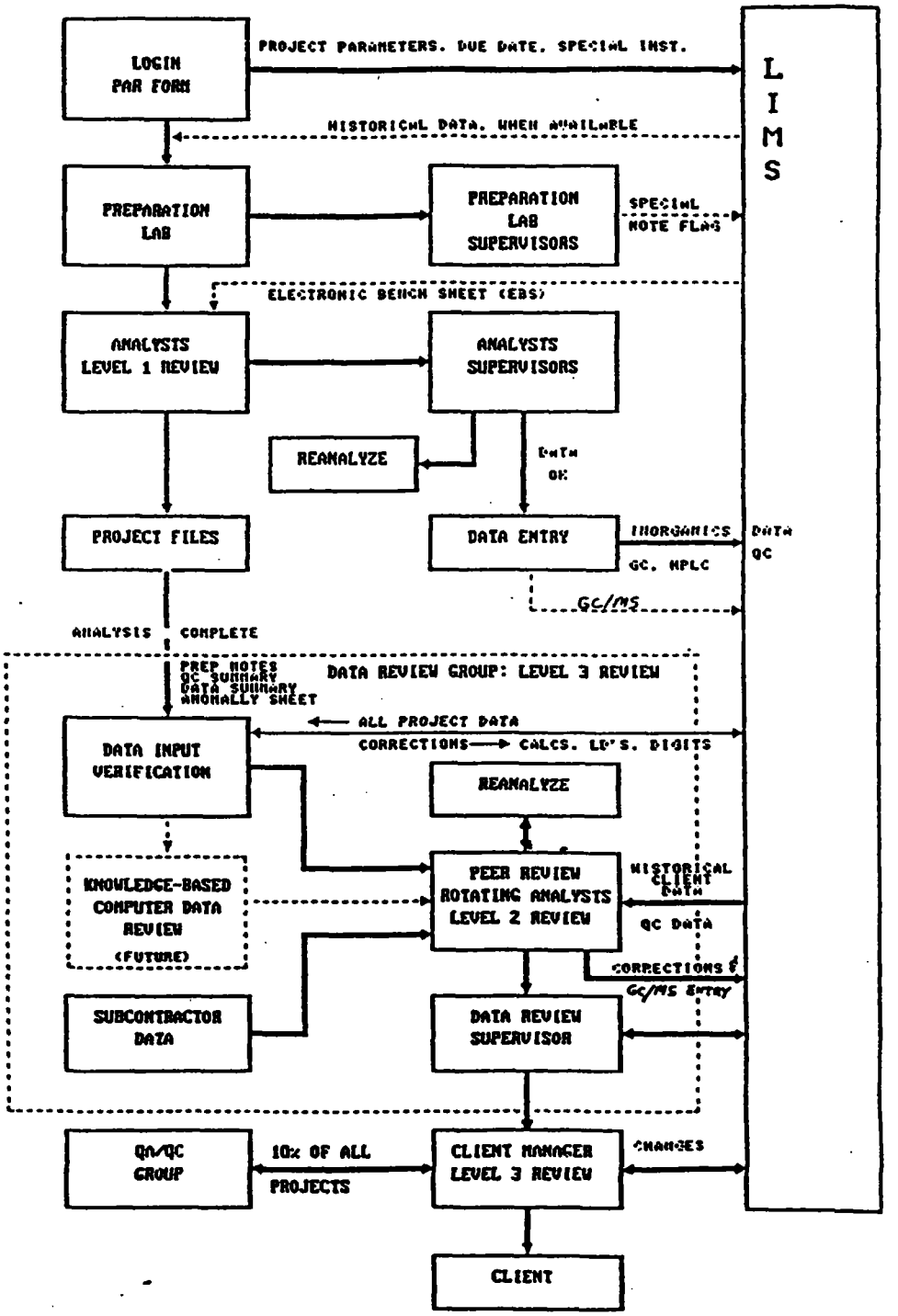

Figure 1 - Laboratory Data Review Framework Form

DATA REVIEW PROGRAM

LEVEL 1 REVIEW CHECKLIST PROJECT # _____

ANALYTICAL TEST_____

ANALYST ITEMS

Y N NA Preparation Lab Notes Reviewed

Y N NA Special Instructions Followed

Y N NA Samples Properly Preserved and in Proper Container

Y N NA Bench Sheets (Data Package Completed With All Information, Including Special Instructions

Y N NA Blank Correction Procedure Followed

Y N NA All Calculations Checked

Y N NA QC Within Limits

Y N NA Out of Control Form Filed

Y N NA Analysis Anomallies Noted

ANALYST COMMENTS:

ANALYSTS REVIEW_____ **DATE** _____

SUPERVISOR ITEMS

Y N NA Results Appear Reasonable

Y N NA Re-run Decision Documented

Y N NA Holding Time Violations Documented

SUPERVISOR COMMENTS:

SUPERVISOR APPROVAL_____ **DATE** _____

DATE DATA ENTERED _____**BY WHOM**_____

Figure 2 - Data Review Program Form

DATA REVIEW PROGRAM

LEVEL 2 REVIEW CHECKLIST PROJECT # _____

INORGANICS: METALS ____ NON-METALS ____

Y N NA Project Assignment Record (LIMS) vs. Actual Data

Y N NA Preparation Lab Notes Reviewed

Y N NA Special Instructions Followed, Check Item
- ____ Project Specific QC
- ____ Raw Data Requested
- ____ Limited Sample Volume
- ____ Special Preparation Needed
- ____ Custom Analytical Test
- ____ Special Holding Times
- ____ Other_____

Y N NA Bench Sheets (Analysis Package) Complete
Y N NA Special Instructions Noted
Y N NA Detection Limits Correct
Y N NA Blank Correction Procedure Followed
Y N NA Significant Digits Correct
Y N NA All Calculations Checked

Y N NA QC Checked and Acceptable
Y N NA QC Lot Assignment Correct
Y N NA Out of Control Form Filed

Y N NA Analysis Anomallies Noted

Y N NA Re-run Decision Documented

Y N NA Analysis Date Reflects Date of Accepted Data

Y N NA Holding Time Violations Documented

Y N NA Camera-Ready Report Cover Sheets Completed
Y N NA Prep sheet Attached
Y N NA Analysis Anomally Sheet Attached
Y N NA Raw Data Attached

LEVEL 2 REVIEW APPROVAL_____ DATE _____

CORRECTIONS ENTERED_____ DATE _____

SUPERVISOR APPROVAL_____ DATE _____

Figure 3 - Data Review Program Form

GC/MS DATA REVIEW CHECKLIST

- ☐ 1. Check LIMS Test vs SOP.
- ☐ 2. Check anomalies sheet and QC forms.
- ☐ 3. Check standard and see if it was updated.
- 4. Look at chromatogram for:
  - ☐ a. carry-over
  - ☐ b. truncating peaks
  - ☐ c. general chromatographic quality
  - ☐ d. very large unknown peaks
- ☐ 5. Recalculate run factors.
- ☐ 6. Check surrogates.
- 7. Check Quant list for:
  - ☐ a. linear ranges
  - ☐ b. co-eluting compounds
  - ☐ c. IS areas
  - ☐ d. carry-over
- ☐ 8. Check spectra for ID's and saturation.
- ☐ 9. Check if TID's are pulled if necessary.
- ☐ 10. Check chromatogram vs Quant list vs TID's.
- ☐ 11. Recalculate all target compounds and TID's.
- ☐ 12. Note any anomalies not on form already.
- ☐ 13. Over-all project review (compound types, ratios).

Figure 4 - GC/MS Data Review Checklist Form

DATA REVIEW PROGRAM

LEVEL 2 REVIEW CHECKLIST PROJECT # _____

CHROMATOGRAPHY

Y N NA Project Assignment Record (LIMS) vs. Actual Data

Y N NA Preparation Lab Notes Reviewed

Y N NA Special Instructions Followed, Check Item
____ Project Specific QC
____ Raw Data Requested
____ Limited Sample Volume
____ Special Preparation Needed
____ Custom Analytical Test
____ Special Holding Times
____ Other_____

Y N NA Bench Sheets (Analysis Package) Complete
Y N NA Special Instructions Noted
Y N NA Detection Limits Correct
Y N NA Blank Correction Procedure Followed
Y N NA Significant Digits Correct
Y N NA All Calculations Checked

Y N NA QC Checked and Acceptable
Y N NA QC Lot Assignment Correct
Y N NA Out of Control Form Filed

Y N NA Analysis Anomallies Noted

Y N NA Re-run Decision Documented

Y N NA Analysis Date Reflects Date of Accepted Data

Y N NA Holding Time Violations Documented

Y N NA Camera-Ready Report Cover Sheets Completed
Y N NA Prep sheet Attached
Y N NA Analysis Anomally Sheet Attached
Y N NA Raw Data Attached

LEVEL 2 REVIEW APPROVAL_____ DATE _____

CORRECTIONS ENTERED_____ DATE _____

SUPERVISOR APPROVAL_____ DATE _____

Figure 5 - Data Review Program Form

Enseco

STANDARD
OPERATING
PROCEDURE

Subject or Title: SAMPLE LOG-IN - REFER TO QAPP SECTION 7.1		Page 1 of 8
SOP No.: LP-RMA-0003	Revision No.: Original	Effective Date: 12/9/87
Supersedes:		

1. Purpose:

To create analyses records in the laboratory computer for notification to lab analysts.

2. Policies:

Log-in must be completed within 24 hours of authorization by a project manager. Authorization occurs when a PAR, Menu of Analytical Services (Figure 1), and Project Screen in the computer are filled out and the information is turned in to the Receiving area (Client Services).

3. Safety: Not Applicable

4. Procedure:

As log-in proceeds fill out the LOG-IN checklist (Figure 2) and address all the issues on this form.

a. Retrieve the samples from the walk in cooler. Compare the bottles with the paperwork and PAR. Check for the correct test and sample matrix and properly preserved bottles for tests.
b. Check that the labeling was done correctly and referenced properly on the chain of custody.
c. Read the Menu of Analytical Services and PAR. Check for any jobcodes and special instructions. Special instructions are entered in the computer using a text editor and are then visible to all analysts. These are entered by the project managers.
d. Go to Data Set Maintenance in the Computer. Modify the project screen to change the project from P(planned) to A(active). Verify the number of samples and the amount of $.
e. Using the group code editor in LIMS (laboratory computer) set up groups of tests according to the PAR. Duplicate and Matrix spiked samples (Project specific QC) need to have separate groups of tests. Print copies of these group codes.

Prepared by: Robert Kelly	Date: 12/10/87
Management Approval: Chuck Webb	Date: 12/10/87
QA Officer Approval: Robert C Hamisch	Date: 12/9/87

f. Go to the Log-in sample program. Assign the proper group code (groups of tests) to each sample separately, adding the received date, collections date, and client identification. List the bottles received for each sample and the location they will be placed. Samples placed on a hold status may or may not be logged in depending on the decision by the project manager.

g. Print a list of the samples, tests assigned, and bottles received through a select report. Print a copy of the project screen. Print an Acknowledgement letter indicating the samples received, RMAL numbers, and any discrepancies noted upon receipt.

h. Perform any compositing, filtering, or splitting necessary. Create any additional preserved bottles if necessary.

i. Fill out the Analysis request form for subcontract work (Figure 3) if necessary. A purchase order must also be filled out. For subcontracting to another Enseco facility fill out the Interlaboratory Analysis Request form (Figure 4).

j. Put samples in the proper locations. Volatiles are placed in refrigerators near the MS and GC areas. Waters for organic prep are placed in refrigerators near the Organic prep labs. Inorganic water bottles are placed in the walk in cooler and arranged by type of preservative. Solids and Wastes are stored in the walk in refrigerator on color coded shelves that are cross referenced by a color coded board in the receiving area.

k. All printed paperwork is placed in the project folder and it is reviewed by the supervisor. The folder is then stored in the Receiving area while the project is active.

l. Changes that need to be made to a project after log-in must be requested by filling out the Log in Change form (Figure 5).

5. Responsibilities:

Project manager is responsible for correctly filling out the PAR, special instructions, Menu of Analytical Services, and Project screen. Turnaround time is decided by the project manager. Sample Receiving technicians are responsible for transferring the information to the laboratory computer.

6. Definitions:

Special instructions - Typed instructions in LIMS to the operations groups and analysts that are necessary to complete the work and can not by indicated by using one of the computer tests.

Proj. #_____ Filled out by: _____

Client Name _____ Date: _____

MENU OF ANALYTICAL SERVICES (GENERAL INFO.)

Project manager must complete and submit this form to Sample Receiving along with PAR.

- **PROJECT TYPE:** [ ] Industrial [ ] EPA/CLP
- **WORK LEVEL DESIGNATION:** (specify one only) [ ] 1 [ ] 2 [ ] 3
- **ACKNOWLEDGMENT LETTER:** [ ] Normal [ ] Other Specify: _____
- **TURNAROUND:** [ ] Normal _____ (Report Due Date) [ ] Rush _____ (Verbal Results Due Date)

  _____ (Report Due Date)

  If rush, check boxes to indicate completion: [ ] Operation's Consent [ ] Rush mail message sent

  If rush, circle divisions involved: GC MS IN ME
- **BILLING:** List [ ] Std. Discount/Surcharge _____
  Note any special billing instructions:
  _____
- **SAMPLE DISPOSAL:**
  [ ] Return to client (30 days after completion of project.)
  [ ] Disposal by RMAL ($25/sample).
  [ ] Store beyond 30 days ($5/month/sample)
  Estimate additional time beyond 30 days. _____
  [ ] Other, specify:
  _____
- **REPORTABLES:**
  [ ] Standard RMAL "Camera Ready" Report only.
  [ ] Project Specific QC
  [ ] Special QC
  [ ] EPA/CLP, Specify package(s), (VOA, BNA, etc.)
  [ ] Special format
  [ ] Verbal results to client.

  Details: _____

Figure 1 - Menu of Analytical Services

LOG IN CHECKLIST

PROJECT #:_____ ADD ON #:_____

LOGGED BY:_____

PAR COMPLETE OR UPDATED?:_____

LIST PAR PROBLEMS:_____

_____

_____

PROJECT SCREEN CORRECT? (# of samples, $ amount)_____

SAMPLE MATRIX CORRECT?_____

TEST MATRIX CORRECT?_____

SHORT HOLDING TIMES ON BOARD?_____

VOAS ON BOARD?_____

CHAIN OF CUSTODY SIGNED?_____

SAMPLE BOTTLES LABELED CORRECTLY?_____

APPROPRIATE BOTTLES FOR PARAMETERS?_____

LIST BOTTLE PROBLEMS_____

_____

_____

VOA VIAL FOR VOA ANALYSIS?_____

SUBCONTRACT FORM FILLED OUT?_____

BOTTLES MADE TO SEND OUT?_____

BOTTLES BOXED AND PUT AWAY?_____

SPECIAL INSTRUCTIONS IN LIMS?_____

BNA OR VOA TESTS MODIFIED?_____

GROUP CODES SENT TO JEFF LOWRY?_____

Figure 2 - Log In Checklist

ANALYSIS REQUEST FOR SUBCONTRACTS

RMAL Project Number: _____

Laboratory to be subcontracted: _____

Project Manager: _____

Results Due: _____

Sample ID Number	Matrix	Parameter	Bottle Description	Comments

Figure 3 - Analysis Request for Subcontracts

INTERLABORATORY ANALYSIS

SHIP TO: *(circle one)*

CAL ERCO CLE GAS MAR HOU

Attention:

SEND RESULTS TO:
Rocky Mountain Analytical Laboratory
4955 Yarrow Street
Arvada, CO 80002
(303) 421-6611 FAC: (303) 431-7171

Attention:

CLIENT NAME | **PROJECT NO.**

Relinquished by: *(Signature)* Received by: *(Signature)* Date Time

Relinquished by: *(Signature)* Received by: *(Signature)* Date Time

Import Lab ID	Enseco ID	Client ID	Matrix (a, s, w)	Date Sampled	Date Rec'd	Date Auth.	Analysis Requested/ P.L. Item #	Sample Condition Upon Receipt

a. Written results required by (date): _____ Verbal results required by (date): _____

b. QC: ☐ Standard Enseco ☐ CLP Protocol ☐ Project-Specific _____

c. Sample Disposal: ☐ Enseco ☐ Return to Client ☐ Phone RMAL

d. Raw Data Copies Needed: ☐ Yes ☐ No

e. Detection Limits: ☐ Standard Product ☐ Other*

f. Holding Times: ☐ Enseco ☐ EPA-CLP ☐ Other*

g. *Special Instructions: _____

h. Intercompany Rebate: *(circle one)* 0% 5% 10% i. P.O. Number _____

Figure 4 - Interlaboratory Analysis

LOG-IN CHANGES

DATE _____

PROJECT #_____

CHANGE REQUESTED BY _____

DESCRIBE CHANGE (tests added or deleted,corrections,etc.)

_____

_____

_____

_____

_____

_____

_____

_____

_____

_____

_____

_____

PRICE LIST INCREASE:_____

NEW DATA DUE:_____

NEW REPORT DUE:_____

PROJECT MANGER SIGNATURE_____

Figure 5 - Log In Changes

Enseco

STANDARD
OPERATING
PROCEDURE

Subject or Title:		Page 1 of 29
USE OF PAR (Project Assignment Record) - Refer to QAPP Section 7.1		
SOP No.: LP-RMA-0004	Revision No.: Original	Effective Date: 12/9/87
Supersedes:		

1. Purpose:

To designate and authorize the tests required for each sample (or sample site) and the matrix of these samples in order for a sample receipt technician to assign these tests in the lab computer.

2. Policies:

PAR's are always filled out before the log-in process may take place. Changing a standard list of analytes for a test logged in must be approved by a senior level manager.

3. Procedure:

a. Choose one of the 4 types of PARs.

Long Form - for projects involving Mass spec., Chromatography, Inorganic and metal work. (Figure 1).
Inorganic - for only inorganic and metals work. (Figure 2)
Chromatography - for only chromatography work. (Figure 3)
Mass Spectrometry - for only Mass spec. work. (Figure 4)

b. Fill in the information at top. Group the samples by similar tests required for the same sample matrix. Indicate the proper sample matrix (Figure 5). Indicate the proper test matrix (see the choices on the PAR).

For tests 01 - water
20 - solid
40 - waste
16 - TCLP
13 - EP TOX

Prepared by: Beth Kelley	Date: 12/10/87
Management Approval: Chil Wolf	Date: 12/10/87
QA Officer Approval: Robert C. Hanisch	Date: 12/9/87

c. Mark the columns associated with each group of samples for the test desired (with an x). Some exceptions are:

S or Q are required for some tests to indicate single or quad analyses

T or D are required to indicate Total or Dissolved

C is required to indicate a change to a standard list. For any C marked there must be an explanation written on the PAR. For example some analytes might be deleted or added from a standard Priority Pollutant Semivolatile list.

d. New tests that are not on the PAR must be created by the Data Administrator following completion of the Request form (Figure 6). Generic tests are available as place holders while the test is being created.

5. Responsibilities:

Project managers are responsible for the accuracy of the PAR.

6. Comments:

TCLP preps must be assigned. They are not pulled with the job codes. Some tests are not to be changed or modified (ICPLIT). Not all created tests are on the PAR. Most of the tests that RMAL sends to subcontractors must be hand written on the PAR. (Figure 7)

7. Definitions:

Jobcode - groups of tests that will be automatically assigned by the computer by the use of a simple phrase; example RCRA01C assigns all RCRA tests.

LONG FORM pg 1. *Last Revision: 6/8/87 Current Revision: 9/15/87* Job Code Y N

Project #	Proj Mgr:	Prepared By:	Date: / /	Spcl Inst: Y N

GROUP	Smpl Mtx	Test Mtx	Client Description	RMA Sample Numbers
A				
B				
C				
D				
E				

Hazard Label:

<<< >>> <<<A >>> ORGANIC CHEMISTRY <<< >>> <<< >>>

GC/LC Analyses	Test ID	Matrices	A	B	C	D	E
SDWA Trihalomethanes	THM SDW	01					
* Halogenated Volatile Organics ##	601LI	01,20 ,16,46					
Halogenated VOA's (LOW DETECTION LIMIT)	601LIL	20					
* Aromatic Volatile Organics ##	602LI	01,20 ,16,46					
Aromatic VOA's (*LOW DETECTION LIMITS*)	602LIL	20					
Benzene, Toluene, Ethylbenzene, Xylenes	602BTEX	01,20 ,16,46					
SDWA Volatiles	MCL SDW	01					
Acrolein & Acrylonitrile	*603LI*	*01,20*					
Phenols	604LI	01,20					
Benzidines	*605LI*	*01,20*					
Phthalate Esters	606LI	01,20					
Nitrosamines	607LI	01,20					
Organochlorine Pesticides/PCB's 608	OCP PP	01,20 ,16,46					
OC Pest's/PCB's (LOW DETECTION LIMIT)	OCP PPL	20					
NPDES Organochlorine Pesticides/PCB's	OCP PP	01,20					
* HSL Organochlorine Pesticides/PCB's ##	OCP HSL	01,20					
HSL OCP's/PCB's (LOW DETECTION LIMIT)	OCPHSLL	20					
CLP/HSL Organochlorine Pesticides/PCB's	OCP CLP	01,20					
Appendix 8 or 9 Organochlorine Pest/PCB's	OCP AP9	01,20					
TCLP Characteristic Organochlorine Pests.	OCPTCLP	01,20,16,46					
* SDWA Organochlorine Pesticides	OCP SDW	01					
* RCRA Organochlorine Pesticides	OCP RCR	01,20					
PCB's	PCB	01,20, 45					
Nitro-Aromatics & Cyclic Ketones	*609LI*	*01,20*					
* Polynuclear Aromatic Hydrocarbons / 610	LC PNA	01,20 ,16,46					
Haloethers	*611LI*	*01,20*					
Chlorinated Hydrocarbons	*612LI*	*01,20*					
Organophosphate Pesticides ##	OPP	01,20					

Most Modifiable Test C - Change Noted
* Preferred Standard Product (01 & 20 Bolded) 01 & 20 Bolded - Std.Prd. DL

Figure 1 - Long Form for GC/MS, Inorganic, Metal Analyses

LONG FORM pg 2. *Last Revision: 6/8/87 Current Revision: 9/15/87*

GC/LC Analyses (cont.)	Test ID	Matrices	A	B	C	D	E
Appendix 8 or 9 Organophosphate Pesticides	OPP AP9	01,20					
Appendix 8 or 9 Herbicides	HRB AP9	01,20					
TCLP Herbicides	HRBTCLP	01,20, 16,46					
• SDWA Herbicides	HRB SDW	01					
* RCRA Herbicides ##	HRB RCR	01,20					
Triazines	*619LI*	*01,20*					
Carbamate & Urea Pesticides/ HPLC	632LI	01,20					
Penta & Tetrachlorophenol	PCP	01,20					
Ethylene Dibromide (EDB)	504LI	01,20					
Hydrocarbon Scan by FID	GC HYD	01,20					
Boiling Point Distribution By GC	GC BPD	01,20					
Water Miscible Solvents	GC DAI	01					
Semivolatiles by MSD	MSD BNA	01,20					
Volatiles by MSD	MSD VOA	01,20					
Semivolatiles by FID	GC BNA	01,20					
Base Neutrals by FID	GC BN	01,20					
Acids by FID	GC ACD	01,20					
Land Treatment Demonstration / HPLC	LC LTD	01,20,43, 16,46					
GC / MS Analyses							
Priority Pollutant Volatiles	VOA 624	01,20 ,40 16,46					
Pri. Pollutant VOA's (LOW DETECTION LIMIT)	VOA624L	20					
Priority Pollutant Semivolatiles	BNA 625	01,20 ,40 16,46					
Priority Pollutant Acid Organics	ACD 625	01,20 ,40					
Priority Pollutant Base/Neutral Organics	BN 625	01,20 ,40					
• Hazardous Substance List Volatiles	VOA HSL	01,20 ,40 16,46					
HSL Volatiles (LOW DETECTION LIMIT)	VOAHSLL	20					
• Hazardous Substance List Semivolatiles	BNA HSL	01,20,40 16,46					
* Hazardous Substance List Acid Organics	ACD HSL	01,20 ,40					
• Hazardous Substance List Base/Neutral Org	BN HSL	01,20,40					
CLP/HSL Volatiles (TID's Included)	VOA CLP	01,20,25					

Most Modifiable Test C-Change noted. Bolded 01 & 20 - Std.Prd.

• Preferred Standard Product (01 & 20 Bolded)

Figure 1 - Long Form for GC/MS, Inorganic, Metal Analyses

LONG FORM pg 3. *Last Revision: 6/8/87 Current Revision: 9/15/87*

GC / MS Analyses (cont.)	Test ID	Matrices	A	B	C	D	E
CLP/HSL Semivolatiles (TID's Included)	BNA CLP	01,20,25					
NPDES Volatiles Organics	VOA 624	01					
NPDES Semivolatiles Organics	BNA 625	01					
Appendix 8 or 9 Volatiles	VOA AP9	01,20,40, 16,46					
Appendix 8 or 9 Semivolatiles	BNA AP9	01,20,40, 16,46					
Appendix 8 or 9 Chlorinated Doxins & Furns	DXN AP9	01,20 *Div.22*					
CL4-CL8 Dioxions & Furans	DXN	01,20 *Div.22*					
Appendix 8 TID Volatiles	VOATID8	01,20,40, 16,46					
Appendix 8 TID Semivolatiles	BNATID8	01,20,40, 16,46					
TCLP / Waste Characteristic Volatiles	VOATCLP	01,20,40, 16,46					
TCLP / Waste Characteristic Semivolatiles	BNATCLP	01,20,40, 16,46					
TCLP / Land Restriction Volatiles	VOA LRR	01,20,40, 16,46					
TCLP / Land Restriction Semivolatiles	BNA LRR	01,20,40, 16,46					
Refinery Hazardous Constituents Volatiles	VOA REF	01,20,40, 16,46					
Refinery VOA's (LOW DETECTION LIMIT)	VOAREFL	20					
Refinery Hazardous Constituents BNA	BNA REF	01,20,40, 16,46					
Polynucleur Aromatic Hydrocarbons	BN PNA	01,20,40, 16,46					
Polynucleur Aromatic Hydrocarbons SIM	BNSIPNA	01,20,40, 16,46					
Tentative Identification Volatiles	VOA TID	01,20,40, 16,46					
Tentative Identification Semivolatiles	BNA TID	01,20,40, 16,46					
Characterization Volatiles	VOA CHR	01,20,40, 16,46					
Characterization Semivolatiles	BNA CHR	01,20,40, 16,46					
Direct Aqueous Injection Volatiles	VOA DAI	01					
Direct Aqueous Injection Semivolatiles	BNA DAI	01					

Bolded 01 & 20 - Std. Prd.

C - Change Noted

Figure 1 - Long Form for GC/MS, Inorganic, Metal Analyses

LONG FORM pg 4. *Last Revision: 6/8/87 Current Revision: 9/15/87*

<<< >>> <<< >>> INORGANIC CHEMISTRY <<< >>> <<< >>>

Physical Tests	Test ID	Matrices	A	B	C	D	E
@ Corrosivity By pH	METPH #	01,20					
Corrosivity, NACE	NACE	01,20					
@ Color	NESCOLR	01					
@ Odor	ODOR	01					
Particle Size / Hydrometer		20					
Particle Size / Sieve		20					
Ignitability, Closed Cup	FLSHPT	01,20,40					
Percent Oil/Water/Solid (O/W/S)	%OWS	40					
Percent O/W/S (Modified Oven Technique)	%OWSMOD	40					
Oil & Grease / Gravimetric	BAL O&G	01,20					
Oil & Grease / Infrared Spectrometer (IR)	IR O&G	01,20					
Aromatic Oil & Grease / (IR)	IR AO&G	01,20					
Total Petroleum Hydrocarbons (TPH) / (IR)	IR TPH	01,20					
Mineral Tests							
@ Specific Conductance	CELSC #	01,20					
@ Acidity	METACID	01,20					
@ pH	METPH #	01,20					
pH, Paste	METPHP	20					
@ Alkalinity, Total/Carb/Bicarb/Hydroxide	METALK	01,20					
Hardness, Titration	BURHARD						
Hardness, ICP	ICPHAR*						
Sodium Adsorption Ratio (SAR)	ICP SAR	01,20					
Cation Exchange Capacity	ICP CEC	20					
Ion Balance Calculation	IONBALCALC						
Ion Balance (Major Cations/Anions)	See Job Code: IONBALANCE						
Oxygen Demand / Carbon							
@ Biochemical Oxygen Demand (BOD)	METBOD	01					
Chemical Oxygen Demand (COD)	METCOD	01,20					
Total Organic Carbon (TOC)	TOCTOC#	01,*(20 Div.12)*					
Purgeable Organic Carbon (POC)	TOCPOC	01					
Dissolved Organic Carbon (DOC)	TOCDOC	01					

S-Single & Q-Quad for 01 Matrix Only; Other matrices do not need an additional letter
* T-Total, D-Dissolved, R-Recoverable.
@ SHORT HOLDING TIMES C-Change Noted.

Figure 1 - Long Form for GC/MS, Inorganic, Metal Analyses

LONG FORM pg 5. *Last Revision: 06/08/87 Current Revision: 09/15/87*

Nitrogen	Test ID	Matrices	A	B	C	D	E
Total Kjedahl Nitrogen (TKN)	TECTKN	01,20					
Ammonia, Nitrogen	TECNH3	01,20					
Ammonia, Distilled	TECNH3T	01,20					
@Nitrite, Nitrogen	TECNO2	01,20					
@Nitrate, Nitrogen	TECNO3	01,20					
Nitrite Plus Nitrate, Nitrogen	TECNOXT	01,20					
@ *Nitrate, IC*	*IC NO3*	*01,20*					
@ *Nitrite, IC*	*IC NO2*	*01,20*					
Total Organic Nitrogen	See Job Code : TON01						
Phosphorus							
@Orthophosphate, Colorimetric	TECO P	01,20					
@Orthophosphate, IC	IC PO4	01,20					
Polyphosphate, IC	IC PPO4	01,20					
Total Phosphorus, Colorimetric	TECT P	01,20					
Phosphorus, ICP	See ICP Suite Compounds						
Solids							
Total Solids (TS)	BALTS	01,20					
Total Suspended (TSS)	BALTSS	01					
@Total Dissolved Solids (TDS)	BALTDS	01					
Total Volatile Solids (TVS)	BALTVS	01,20					
Volatile Suspended Solids (VSS)	BALVSS	01					
@Turbidity (NTU)	SPETURB	01					
Settleable Solids (SS)	CONESS	01					
Microbiology							
@Coliform, Total	COLIF T	01					
@Coliform, Fecal	COLIF F	01					

S-Single & Quad for 01 Matrix Only; Other matrices do not need an additional letter
* T-Total, D-Dissolved, R-Recoverable.
C-Change noted.

@ SHORT HOLDING TIMES Underlined Items Are Preferred

Figure 1 - Long Form for GC/MS, Inorganic, Metal Analyses

LONG FORM pg 6. *Last Revision: 6/8/87 Current Revision: 9/15/87*

Sulphur	Test ID	Matrices	A	B	C	D	E
Sulfate, IC	IC SO4	01,20					
Sulfate, Turbidimetric	SPESO4	01,20					
@ Sulfite, Titrimetric	BURSO3	01,20					
@Sulfite, IC	IC SO3	01,20					
Sulfide, Colorimetric	SPES *	01,20					
Sulfide, IC	IC S	01,20					
Sulfur, ICP	See ICP Suite Compounds						
Sulfide - Reactive	SPES R	01,20					
Thiosulfate, IC	IC S2O3	01,20					
Thiocyanate, IC	IC SCN	01,20					
Cyanide							
Cyanide, Total	TECCN T	01,20					
Cyanide, Amenable to Chlorination	TECCN F	01,20					
Cyanide, Weak & Dissociable	TECCN W	01,20					
Cyanide, IC	IC CN	01,20					
Cyanide - Reactive	TECCN R	01,20					
Halogens							
Bromide, IC	IC BR	01,20					
Chloride, Titrimetric	BURCL	01,20					
Chloride, IC	IC CL	01,20					
@ Chlorine, Residual	POTCL2R	01,20					
Perchlorate, IC	IC CLO4	01,20					
Fluoride, Electrode	METF	01,20					
Fluoride, Distilled, Electrode	METF T	01,20					
Fluoride, IC	*IC F*	*01,20*					
Iodide, IC	IC I	01,20					
Total Organic Halogen (TOX)	TOXTOX#	01,20					
Purgeable Organic Halogen (POX)	TOXPOX	01					
Dissolved Organic Halogen (DOX)	TOXDOX	01					

S-Single & Q-Quad for 01 matrix only; Other matrices do not need an additional letter
* T-Total, D-Dissolved, R-Recoverable.
@ SHORT HOLDING TIMES, C-Change Noted. Underlined Items Are Preferred

Figure 1 - Long Form for GC/MS, Inorganic, Metal Analyses

LONG-FORM. pg 7. *Last Revision: 6/8/87 Current Revision: 9/15/87*

Radiochemistry	Test ID	Matrices	A	B	C	D	E
Gross Alpha & Beta	RADA&B	01,20					
Lead 210	RAPB210	01,20					
Radium 226	RAD226	01,20					
Radium 228	RAD228	01,20					
Thorium 230	RATH230	01,20					
Uranium, Natural	TOXDOX	01,20					
Other Tests							
Tannin / Lignin		01,20 *Div.22*					
Phenolics (4-AAP)	SPEPHEN	01,20					
@ Surfactants (MBAS)	SPEMBAS	01,20					
CLIENTHOLD							
TCLP Master Preps							
TCLP Prep / EXTRACTABLE Organics Only**	M40TCLPO	40					
TCLP Prep / VOLATILE Organics Only	M40ZHE	40					
TCLP Prep / METALS Only	M40TCLPM	40					
TCLP Prep / METALS & EXRACT. ORGS Only	M40TCLP	40					

** Includes Pesticides

S-Single & Q-Quad for 01 Matrix Only; Other matrices do not need an additional letter.
* D-Dissolved, T-Total, R-Recoverable;
@ SHORT HOLDING TIMES C-Change Noted.

Figure 1 - Long Form for GC/MS, Inorganic, Metal Analyses

LONG FORM pg 8. *Last Revision: 6/8/87 Current Revision: 9/15/87*

Trace Metals by ICP & AA	Test ID	Matrices	A	B	C	D	E
* ICP Scan / 27 Metals, Standard Product	ICP LI*	01,20					
ICP Metals, Soluble Salts	ICP SS	01,20					
ICP Suite / Choose From List Below	ICP*	01,20,T16,T46	See below				

Choose: ICP Suite, AA Metals	Test ID	A	B	C	D	E	Choose: ICP Suite, AA Metals	Test ID	A	B	C	D	E
Aluminum, ICP							Manganese, ICP						
Antimony, Furn AA	FSB*						Mercury, CV AA	CVHG*					
Antimony, ICP							Molybdenum, ICP						
Arsenic, Furn AA	FAS*						Nickel, ICP						
Arsenic, Hyd Gen	DIV. 22						Osmium, ICP						
Arsenic, ICP							Phosphorus, ICP						
Barium, ICP							Potassium, ICP						
Beryllium, ICP							Selenium, ICP						
Boron, ICP							Selenium, Furn AA	FSE*					
Cadmium, Furn AA	FCD*						Selenium, Hyd Gen	*Div. 22*					
Cadmium, ICP							Silica (SiO2), ICP						
Calcium, ICP							Silicon, ICP						
Chromium (III)	CR+3♦						Silver, Furn AA	FAG*					
Chromium (VI)	SPECR6*						Silver, ICP						
Chromium, ICP							Sodium, ICP						
Cobalt, ICP							Strontium, ICP						
Copper, ICP							Sulphur						
Iron, ICP							Thallium, Furn	FTL*					
Lead, Tot Organic							Tin, ICP						
Lead, Furnace AA	FPB*						Titanium, ICP						
Lead, ICP							Uranium, Natural						
Lithium, ICP							Vanadium, ICP						
Magnesium, ICP							Zinc, ICP						

* D-Dissolved, T-Total, R-Recoverable; (01,20,16,46 matrices for ICP* & Furnace Tests)
♦ DIS - Dissolved, TOT- Total.

Figure 1 - Long Form for GC/MS, Inorganic, Metal Analyses

LONG FORM pg 9. *Last Revision: 6/8/87 Current Revision: 9/15/87*

Inorganic Regulatory Packages	Job Code	Matrices	A	B	C	D	E
Appendix VIII Metals/Inorganics	AP8**MI	01,09,20,40,16					
Appendix IX Metals/Inorganics	AP9**MI	01,09,20,40,16					
Appendix IX Optional-Water Chem. Parameters	IONBALANCE	09					
Hazardous Substance List (HSL) Met/Inorg	HSL**MI	01,09,20,40,16					
CLP / HSL Metals/Inorganics	CLP**MI	01,09,20,40					
SDWA Primary Metals / Inorganics	SDWAP**M/I	01,09					
SDWA Secondary Metals / Inorganics	SDWAS**MI	01,09					
RCRA Total Metals	RCRA**M	01,09,20,40					
RCRA EP I Metals	EPI RCRM	Std.Prd. DL					
RCRA EP II Metals	EPII RCRM						
RCRA Groundwater Suitability	RCRAS**M/I/R	01,09					
RCRA Water Quality Metals/Inorganics	RCRAQ**MI	01,09					
RCRA Groundwater Quality Indicators	RCRAI**MI#	01,09					
Priority Pollutant Metals	PP**M	01,09,20,40,16					
Priority Pollutant Inorganics	PP**I	01,09,20,40					
Refinery Total Metals (Hazardous Constituent)	REFHC**M	01,09,20,40,16					
Refinery EP I Metals	EPI REFM	40					
Refinery EP II Metals	EPII REFM	40					
NPDES Part A Inorganics	NPDA**I	01					
NPDES Part B Metals / Inorganics / RAD	NPDB**MIR	01					
NPDES Part C Metals / Inorganics	PP**M/I	01,09,20,40					
TCLP Metals Aqueous Leachate	OTC**M	01,20,16					
TCLP Refinery Metals	See REFHC16M						

S-Single, Q-Quad

Figure 1 - Long Form for GC/MS, Inorganic, Metal Analyses

S LONG FORM pg10. *Last Revision: 6/8/87 Current Revision: 9/15/87*

Item Number	Changes

Comments To Sample Receiving :

Figure 1 - Long Form for GC/MS, Inorganic, Metal Analyses

JOB CODES pg 1 *Last Revision: 4/2/87 Issued: 6/8/87*

SDWA Drinking Water Parameters	J.CODE ID	Matrices	A	B	C	D	E
Primary Complete	SDWAP**C	01,09					
Primary Metals	SDWAP**M	01,09					
Primary Inorganics	SDWAP**I	01,09					
Primary Radiochemistry	SDWAP**R	01,09					
Primary Organics	SDWAP**O	01,09					
Secondary Metals / Inorganics	SDWAS**MI	01,09					
Priority Pollutants							
Complete	PP**C	01,09,20,40					
Metals	PP**M	01,09,20,40,16					
Inorganics	PP**I	01,09,20,40					
Organics	PP**O	01,09,20,40,16					
Hazardous Substance List							
Complete	HSL**C	01,09,20,40					
Metals/Inorganics	HSL**MI	01,09,20,40,16					
Organics	HSL**O	01,09,20,40,16					
RCRA Groundwater - Monitoring Parameters							
Suitability Complete	RCRAS**C	01,09					
Suitability Metals	RCRAS**M	01,09					
Suitability Inorganics	RCRAS**I	01,09					
Suitability Radiochemistry	RCRAS**R	01,09					
Suitability Organics	RCRAS**O	01,09					
Quality Metals / Inorganics	RCRAQ**MI	01,09					
Indicator Inorganics	RCRAI**I#	01,09					
CLP / EPA Report Packages							
Complete	CLP C						
Metals / Inorganics	CLP MI						
Organics	CLP O						

S-Single, Q-Quad For 01 & 09 Matrices Only

Figure 1 - Long Form for GC/MS, Inorganic, Metal Analyses

JOB CODES pg 2. *Last Revision: 4/2/87 Issued: 6/8/87*

Waste Characteristics & Other Tests	J.CODE ID	Matrices	A	B	C	D	E
WC Inorganics	RCRAWC40I	40					
EPI/ Metals	EPI RCRM						
EPI/ Organics	EPI RCRO						
EPII Oily Waste Metals	EPII RCRM						
TCLP Waste Characteristic *(mark one: M/O/C)*	OTC**M/O/C	01,20,16					
Land Restriction Rule	LRR**O	01,20,16					
RCRA Metals	RCRA**M	01,09,20,40,16					
Refinery Hazardous Constituents (HC)							
HC Complete	REFHC**C	01,09,20,40,16					
HC Metals	REFHC**M	01,09,20,40,16					
HC Organics	REFHC**O	01,09,20,40,16					
Waste Characteristics - Refinery							
Inorganics	REFWC**I	40					
EPI Metals	EPI REFM						
EPII Oily Waste Metals	EPII REFM						
Appendix 8 List							
Complete	AP8**C	01,09,20,40,16					
Metals / Inorganics	AP8**MI	01,09,20,40,16					
Organics	AP8**O	01,09,20,40,16					
Appendix 9 List							
Complete	AP9**C	01,09,20,40,16					
Metals / Inorganics	AP9**MI	01,09,20,40,16					
Organics	AP9**O	01,09,20,40,16					
Ionbalance							
Complete	IONBALANCE	01,09					
Cations	CATIONS	01,09					
Anions	ANIONS	01,09					

TCLP MASTER,(M40), PREPS : THESE ARE NO LONGER INCLUDED IN JOB CODES !!
YOU MUST PIECE THE M PREPS TOGETHER WITH DESIRED ANALYSES ; SEE FLOWCHARTS

TCLP Prep / EXTRACTABLE Organics Only *	M40TCLPO	40					
TCLP Prep / VOLATILE Organics Only	M40ZHE	40					
TCLP Prep / METALS Only	M40TCLPM	40					
TCLP Prep / METALS & EXTRACT. ORGS Only	M40TCLP	40					

* Includes Pesticides

Figure 1 - Long Form for GC/MS, Inorganic, Metal Analyses

INORG CHEMISTRY pg.1. *Last Revision: 6/8/87 Current Revision: 9/15/87* Job Code : Y N

Project #	Proj. Mgr.:	Prepared By:	Date: / /	Spcl. Inst: Y N

Group	Smpl Mtx	Test Mtx	Client Description	RMA Sample Numbers
A				
B				
C				
D				
E				

Hazard Label:

Physical Tests	Test ID	Matrices	A	B	C	D	E
@ Corrosivity by pH	METPH #	01,20					
Corrosivity, NACE	NACE	01,20					
@ Color	NESCOLR	01					
@ Odor	ODOR	01					
Particle Size / Hydrometer		20					
Particle Size / Sieve		20					
Ignitability, Closed Cup	FLSHPT	01,20,40					
Percent Oil / Water / Solids	%OWS	40					
Oil & Grease / Gravimetric	BAL O&G	01,20					
Oil & Grease / Infrared Spectrometer (IR)	IR O&G	01,20					
Aromatic Oil & Grease / IR	IR AO&G	01,20					
Total Petroleum Hydrocarbons (TPH) / IR	IR TPH	01,20					
Mineral Tests							
@ Specific Conductance	CELSC #	01,20					
@ Acidity	METACID	01,20					
@ pH	METPH #	01,20					
pH, Paste	METPHP	20					
@ Alkalinity, Total/Carb/Bicarb/Hydroxide	METALK	01,20					
Hardness, Titration	BURHARD						
Hardness, ICP	ICPHAR*						
Sodium Adsorption Ratio (SAR)	ICP SAR	01,20					
Cation Exchange Capacity	ICP CEC	20					
Ion Balance Calculation	IONBALCALC						
Ion Balance (Major Cations/Anions)	See Job Code: IONBALANCE						
Oxygen Demand / Carbon							
@ Biochemical Oxygen Demand (BOD)	METBOD	01					
Chemical Oxygen Demand (COD)	METCOD	01,20					
Total Organic Carbon (TOC)	TOCTOC#	01,*(20 Div.12)*					
Purgeable Organic Carbon (POC)	TOCPOC	01					
Dissolved Organic Carbon (DOC)	TOCDOC	01					

S-Single & Quad for 01 Matrix Only; Other matrices do not need an additional letter
* T-Total, D-Dissolved, R-Recoverable.
C-Change noted. @ SHORT HOLDING TIMES

Figure 2 - Inorganic and Metal Analyses

INORGANIC CHEMISTRY pg 2. *Last Revision: 6/8/87 Current Revision: 9/15/87*

Nitrogen	Test ID	Matrices	A	B	C	D	E
Total Kjedahl Nitrogen (TKN)	TECTKN	01,20					
Ammonia, Nitrogen	TECNH3	01,20					
Ammonia, Distilled	TECNH3T	01,20					
@ Nitrite, Nitrogen	TECNO2	01,20					
@ Nitrate, Nitrogen	TECNO3	01,20					
Nitrite Plus Nitrate, Nitrogen	TECNOXT	01,20					
@ *Nitrate, IC*	*IC NO3*	*01,20*					
@ *Nitrite, IC*	*IC NO2*	*01,20*					
Total Organic Nitrogen	See Job Code: TON01						
Phosphorus							
@ Orthophosphate, Colorimetric	TECO P	01,20					
@ Orthophosphate, IC	IC PO4	01,20					
Polyphosphate, IC	IC PPO4	01,20					
Total Phosphorus, Colorimetric	TECT P	01,20					
Phosphorus, ICP	See ICP Suite Compounds						
Solids							
Total Solids (TS)	BALTS	01,20					
Total Suspended Solids (TSS)	BALTSS	01					
Total Dissolved Solids (TDS)	BALTDS	01					
Total Volatile Solids (TVS)	BALTVS	01,20					
Volatile Suspended Solids (VSS)	BALVSS	01					
@ Turbidity (NTU)	SPETURB	01					
Settleable Solids (SS)	CONESS	01					
Microbiology							
@ Coliform, Total	COLIF T	01					
@ Coliform, Fecal	COLIF F	01					
Sulphur							
Sulfate, IC	IC SO4	01,20					
Sulfate, Turbidimetric	SPESO4	01,20					
@ Sulfite, Titrimetric	BURSO3	01,20					
@ Sulfite, IC	IC SO3	01,20					
Sulfide, Colorimetric	SPES *	01,20					
Sulfur, ICP	See ICP Suite Compounds						
Sulfide - Reactive	SPES R	01,20					
Thiosulfate, IC	IC S2O3	01,20					
Thiocyanate, IC	IC SCN	01,20					

* T-Total, D-Dissolved; for 01 matrix;
Total sulfide only, for 20 matrix.

Underlined Items Are Preferred

Figure 2 - Inorganic and Metal Analyses

INORGANIC CHEMISTRY pg 3. *Last Revision: 6/8/87 Current Revision: 9/15/87*

Cyanide	Test ID	Matrices	A	B	C	D	E
Cyanide, Total	TECCN T	01,20					
Cyanide, Amenable to Chlorination	TECCN F	01,20					
Cyanide, Weak & Dissociable	TECCN W	01,20					
Cyanide, IC	IC CN	01,20					
Cyanide - Reactive	TECCN R	01,20					
Halogens							
Bromide, IC	IC BR	01,20					
Chloride, Titrimetric	BURCL	01,20					
Chloride, IC	IC CL	01,20					
@ Chlorine, Residual	POTCL2R	01,20					
Perchlorate, IC	IC ClO4	01,20					
Fluoride, Electrode	*METF*	*01,20*					
Fluoride, Distilled, Electrode	METF T	01,20					
Fluoride, IC	IC F	01,20					
Iodide , IC	IC I	01,20					
Total Organic Halogen (TOX)	TOXTOX#	01,20					
Purgeable Organic Halogen (POX)	TOXPOX	01					
Dissolved Organic Halogen (DOX)	TOXDOX	01					
Radiochemistry							
Gross Alpha & Beta	RADA&B	01,20 *Div.12*					
Lead 210	RAPB210	01,20 *Div.12*					
Radium 226	RAD226	01,20 *Div.12*					
Radium 228	RAD228	01,20 *Div.12*					
Thorium 230	RATH230	01,20 *Div.12*					
Uranium, Natural	RADU	01,20 *Div.12*					
Other Tests							
@ Tannin / Lignin	DIV. 22	01,20					
Phenolics (4-AAP)	SPEPHEN	01,20					
@ Surfactants (MBAS)	SPEMBAS	01,20					
Major Anion Scan by Ion Chromatography	IC SCAN	01,20					
TCLP Master Prep							
TCLP Prep / METALS Only	M40TCLPM	40					

S-Single, Q-Quad, for 01 matrix only; *20 matrix leave blank.*

Underlined Items Are Preferred

Figure 2 - Inorganic and Metal Analyses

INORGANIC CHEMISTRY pg 4. *Last Revision: 6/8/87 Current Revision: 9/15/87*

Trace Metals by ICP & AA	Test ID	Matrices	A	B	C	D	E
ICP Scan / 27 Metals, Standard Product	ICP LI*	01,20,16					
ICP Metals , Soluble Salts	ICP SS	01,20					
ICP Suite / Choose from Lists Below	ICP*	01,20,T16,T46	See below				

Choose: ICP Suite, AA Metals	Test ID	A	B	C	D	E	Choose: ICP Suite, AA Metals	Test ID	A	B	C	D	E
Aluminum, ICP							Maganese, ICP						
Antimony, Furn AA	FSB*						Mercury, CV AA	CVHG*					
Antimony, ICP							Molybdenum, ICP						
Arsenic, Furn AA	FAS*						Nickel, ICP						
Arsenic, Hyd Gen	DIV. 22						Osmium, ICP						
Arsenic, ICP							Phosphorus, ICP						
Barium, ICP							Potassium, ICP						
Beryllium, ICP							Selenium, ICP						
Boron, ICP							Selenium, Furn AA	FSE*					
Cadmium, Furn AA	FCD*						Selenium, Hyd Gen	DIV. 22					
Cadmium, ICP							Silica (SiO2), ICP						
Calcium, ICP							Silicon, ICP						
Chromium (III)	CR+3♦						Silver, Furn AA	FAG*					
Chromium (VI)	SPECR6*						Silver, ICP						
Chromium, ICP							Sodium, ICP						
Cobalt, ICP							Strontium, ICP						
Copper, ICP							Sulphur						
Iron, ICP							Thallium, Furn	FTL*					
Lead, Tot Organic							Tin, ICP						
Lead, Furnace AA	FPB*						Titanium, ICP						
Lead, ICP							Uranium, Natural						
Lithium, ICP							Vanadium, ICP						
Magnesium, ICP							Zinc, ICP						

* D-Dissolved, T-Total, R-Recoverable; (01,20,16,46 matrix for ICP* and Furnace Tests)
♦ DIS - Dissolved, TOT- Total.

Figure 2 - Inorganic and Metal Analyses

INORGANIC CHEMISTRY pg 5. *Last Revision: 6/8/87 Current Revision: 9/15/87*

Inorganic Regulatory Packages	Job Code	Matrices	A	B	C	D	E
Appendix VIII Metals / Inorganics	AP8**MI	01,09,20,40,16					
Appendix IX Metals / Inorganics	AP9**MI	01,09,20,40,16					
Appendix IX Optional-Water Chemistry Param	IONBALANCE	09					
Hazardous Substance List (HSL) Met / Inorg	HSL**MI	01,09,20,40,16					
CLP / HSL Metals / Inorganics	CLP**MI	01,09,20,40					
SDWA Primary Metals / Inorganics	SDWAP**M/I	01,09					
SDWA Secondary Metals / Inorganics	SDWAS**MI	01,09					
RCRA Total Metals	RCRA**M	01,09,20,40,16					
RCRA EP I Metals	EPI RCRM						
RCRA EP II Metals	EPII RCRM						
RCRA Groundwater Suitability	RCRAS**M/I/R	01,09					
RCRA Water Quality Metals/Inorganics	RCRAQ**MI	01,09					
RCRA Groundwater Indicators	RCRAI**MI#	01,09					
Priority Pollutant Metals	PP**M	01,09,20,40,16					
Priority Pollutant Inorganics	PP**I	01,09,20,40					
Refinery Total Metals (Hazardous Constituent)	REFHC**M	01,09,20,40,16					
Refinery EP I Metals	EPI REFM	40					
Refinery EP II Metals	EPII REFM	40					
NPDES Part A Inorganics	NPDA**I	01					
NPDES Part B Metals / Inorganics / RAD	NPDB**MIR	01					
NPDES Part C Metals / Inorganics	PP**M/I	01,09,20,40					
TCLP Metals Waste Characteristic Metals	OTC**M	01,20,16					
TCLP Refinery Metals	See REFHC**M						

Item Number	Changes

Comments For Sample Receiving:

S -Single, Q -Quad for 01 matrix only

Figure 2 - Inorganic and Metal Analyses

JOB CODES pg 1 *Last Revision: 4/2/87 Issued: 6/8/87*

SDWA Drinking Water Parameters	J.CODE ID	Matrices	A	B	C	D	E
Primary Complete	SDWAP**C	01,09					
Primary Metals	SDWAP**M	01,09					
Primary Inorganics	SDWAP**I	01,09					
Primary Radiochemistry	SDWAP**R	01,09					
Primary Organics	SDWAP**O	01,09					
Secondary Metals / Inorganics	SDWAS**MI	01,09					
Priority Pollutants							
Complete	PP**C	01,09,20,40					
Metals	PP**M	01,09,20,40,16					
Inorganics	PP**I	01,09,20,40					
Organics	PP**O	01,09,20,40,16					
Hazardous Substance List							
Complete	HSL**C	01,09,20,40					
Metals/Inorganics	HSL**MI	01,09,20,40,16					
Organics	HSL**O	01,09,20,40,16					
RCRA Groundwater - Monitoring Parameters							
Suitability Complete	RCRAS**C	01,09					
Suitability Metals	RCRAS**M	01,09					
Suitability Inorganics	RCRAS**I	01,09					
Suitability Radiochemistry	RCRAS**R	01,09					
Suitability Organics	RCRAS**O	01,09					
Quality Metals / Inorganics	RCRAQ**MI	01,09					
Indicator Inorganics	RCRAI**I#	01,09					
CLP / EPA Report Packages							
Complete	CLP C						
Metals / Inorganics	CLP MI						
Organics	CLP O						

S-Single, Q-Quad For 01 & 09 Matrices Only

Figure 2 - Inorganic and Metal Analyses

JOB CODES pg 2. *Last Revision: 4/2/87 Issued: 6/8/87*

Waste Characteristics & Other Tests	J.CODE ID	Matrices	A	B	C	D	E
WC Inorganics	RCRAWC40I	40					
EPI/ Metals	EPI RCRM						
EPI/ Organics	EPI RCRO						
EPII Oily Waste Metals	EPII RCRM						
TCLP Waste Characteristic *(mark one: M/O/C)*	OTC**M/O/C	01,20,16					
Land Restriction Rule	LRR**O	01,20,16					
RCRA Metals	RCRA**M	01,09,20,40,16					
Refinery Hazardous Constituents (HC)							
HC Complete	REFHC**C	01,09,20,40,16					
HC Metals	REFHC**M	01,09,20,40,16					
HC Organics	REFHC**O	01,09,20,40,16					
Waste Characteristics - Refinery							
Inorganics	REFWC**I	40					
EPI Metals	EPI REFM						
EPII Oily Waste Metals	EPII REFM						
Appendix 8 List							
Complete	AP8**C	01,09,20,40,16					
Metals / Inorganics	AP8**MI	01,09,20,40,16					
Organics	AP8**O	01,09,20,40,16					
Appendix 9 List							
Complete	AP9**C	01,09,20,40,16					
Metals / Inorganics	AP9**MI	01,09,20,40,16					
Organics	AP9**O	01,09,20,40,16					
Ionbalance							
Complete	IONBALANCE	01,09					
Cations	CATIONS	01,09					
Anions	ANIONS	01,09					

TCLP MASTER,(M40), PREPS : THESE ARE NO LONGER INCLUDED IN JOB CODES !!
YOU MUST PIECE THE M PREPS TOGETHER WITH DESIRED ANALYSES ; SEE FLOWCHARTS

TCLP Prep / EXTRACTABLE Organics Only *	M40TCLPO	40					
TCLP Prep / VOLATILE Organics Only	M40ZHE	40					
TCLP Prep / METALS Only	M40TCLPM	40					
TCLP Prep / METALS & EXTRACT. ORGS Only	M40TCLP	40					

* Includes Pesticides

Figure 2 - Inorganic and Metal Analyses

ORGANIC CHEMISTRY pg 1 *Last Revision: 4/2/87 Issued: 6/8/87* Job Code Y N

Project #	Proj Mgr:	Prepared By:	Date: / /	Spcl Inst: Y N

GROUP	Smpl Mtx	Test Mtx	Client Description	RMA Sample Numbers
A				
B				
C				
D				
E				

Hazard Label:

GC/LC Analyses	Test ID	Approved Test Matrices	A	B	C	D	E
* SDWA Trihalomethanes	THM SDW	01					
* Halogenated Volatile Organics ##	601LI	01,20,16,46					
Halogenated VOA Orgs (LOW DETECTION LIMIT)	601LIL	20					
* Aromatic Volatile Organics ##	602LI	01,20,16,46					
Aromatic VOA Orgs (LOW DETECTION LIMIT)	602LIL	20					
Benzene, Toluene, Ethylbenzene, Xylenes	602BTEX	01,20 ,16,46					
SDWA Volatiles	MCL SDW	01					
Acrolein & Acrylonitrile	*603LI*	*01,20*					
Phenols	604LI	01,20					
Benzidines	*605LI*	*01,20*					
Phthalate Esters	606LI	01,20					
Nitrosamines	607LI	01,20					
Organochlorine Pesticides/PCB's 608	OCP PP	01,20					
OCP's/PCB's 608 (LOW DETECTION LIMIT)	OCP PPL	20					
NPDES Organochlorine Pesticides/PCB's	OCP PP	01,20					
* HSL Organochlorine Pesticides/PCB's ##	OCP HSL	01,20 ,16,46					
HSL OCP's/PCB's (LOW DETECTION LIMIT)	OCPHSLL	20					
CLP/HSL Organochlorine Pesticides/PCB's	OCP CLP	01,20					
Appendix 8 or 9 Organochlorine Pest/PCB's	OCP AP9	01,20					
TCLP Characteristic Organochlorine Pests.	OCPTCLP	01,20,16,46					
* SDWA Organochlorine Pesticides	OCP SDW	01					
* RCRA Organochlorine Pesticides	OCP RCR	01,20					
PCB's	PCB	01,20,45					
Nitro-Aromatics & Cyclic Ketones	*609LI*	*01,20*					
Polynuclear Aromatic Hydrocarbons / 610	LC PNA	01,20 ,16,46					
Haloethers	*611LI*	*01,20*					
Chlorinated Hydrocarbons	*612LI*	*01,20*					
Organophosphate Pesticides ##	OPP	01,20					
Appendix 8 or 9 Organophosphate Pesticides	OPP AP9	01,20					
Appendix 8 or 9 Herbicides	HRB AP9	01,20					

Most Modifiable Test C - Change Noted
* Preferred Standard Product (Bolded 01 & 20) 01 & 20 Bolded - Std.Prd. DL

Figure 3 - Chromotography Analyses

ORGANIC CHEMISTRY pg 2 *Last Revision: 4/2/87 Issued: 6/8/87*

GC/LC Analyses Cont.	Test ID	Matrices	A	B	C	D	E
TCLP Herbicides	HRBTCLP	01,20,16,46					
* SDWA Herbicides ##	HRB SDW	01					
* RCRA Herbicides ##	HRB RCR	01,20					
Triazines	*619LI*	*01,20*					
Carbamate & Urea Pesticides, HPLC	632LI	01,20					
Penta & Tetrachlorophenol	PCP	01,20					
Ethylene dibromide (EDB)	504LI	01,20					
Hydrocarbon Scan by FID	GC HYD	01,20					
Boiling Point Distribution By GC	GC BPD	01,20					
Water Miscible Solvents	GC DAI	01					
Semivolatiles by MSD	MSD BNA	01,20					
Volatiles by MSD	MSD VOA	01,20					
Semivolatiles by FID	GC BNA	01,20					
Base Neutrals by FID	GC BN	01,20					
Acids by FID	GC ACD	01,20					
Land Treatment Demonstration /HPLC	LC LTD	01,20,16,46					
CLIENTHOLD							

>>> Other <<<							
TCLP Prep / EXTRACTABLE ORGANICS Only	TCLPO	M40					
TCLP Prep / VOLATILES Only	ZHE	M40					

Item Number	Changes

Comments To Sample Receiving :

Most Modifiable Test C- Change noted

* Preferred Standard Product (01 & 20 Bolded)

Figure 3 - Chromotography Analyses

JOB CODES pg 1 *Last Revision: 4/2/87 Issued: 6/8/87*

SDWA Drinking Water Parameters	J.CODE ID	Matrices	A	B	C	D	E
Primary Complete	SDWAP**C	01,09					
Primary Metals	SDWAP**M	01,09					
Primary Inorganics	SDWAP**I	01,09					
Primary Radiochemistry	SDWAP**R	01,09					
Primary Organics	SDWAP**O	01,09					
Secondary Metals / Inorganics	SDWAS**MI	01,09					
Priority Pollutants							
Complete	PP**C	01,09,20,40					
Metals	PP**M	01,09,20,40,16					
Inorganics	PP**I	01,09,20,40					
Organics	PP**O	01,09,20,40,16					
Hazardous Substance List							
Complete	HSL**C	01,09,20,40					
Metals/Inorganics	HSL**MI	01,09,20,40,16					
Organics	HSL**O	01,09,20,40,16					
RCRA Groundwater - Monitoring Parameters							
Suitability Complete	RCRAS**C	01,09					
Suitability Metals	RCRAS**M	01,09					
Suitability Inorganics	RCRAS**I	01,09					
Suitability Radiochemistry	RCRAS**R	01,09					
Suitability Organics	RCRAS**O	01,09					
Quality Metals / Inorganics	RCRAQ**MI	01,09					
Indicator Inorganics	RCRAI**I#	01,09					
CLP / EPA Report Packages							
Complete	CLP C						
Metals / Inorganics	CLP MI						
Organics	CLP O						

S-Single, Q-Quad For 01 & 09 Matrices Only

Figure 3 - Chromotography Analyses

JOB CODES pg 2. *Last Revision: 4/2/87 Issued: 6/8/87*

Waste Characteristics & Other Tests	J.CODE ID	Matrices	A	B	C	D	E
WC Inorganics	RCRAWC40I	40					
EPI/ Metals	EPI RCRM						
EPI/ Organics	EPI RCRO						
EPII Oily Waste Metals	EPII RCRM						
TCLP Waste Characteristic *(mark one: M/O/C)*	OTC**M/O/C	01,20,16					
Land Restriction Rule	LRR**O	01,20,16					
RCRA Metals	RCRA**M	01,09,20,40,16					
Refinery Hazardous Constituents (HC)							
HC Complete	REFHC**C	01,09,20,40,16					
HC Metals	REFHC**M	01,09,20,40,16					
HC Organics	REFHC**O	01,09,20,40,16					
Waste Characteristics - Refinery							
Inorganics	REFWC**I	40					
EPI Metals	EPI REFM						
EPII Oily Waste Metals	EPII REFM						
Appendix 8 List							
Complete	AP8**C	01,09,20,40,16					
Metals / Inorganics	AP8**MI	01,09,20,40,16					
Organics	AP8**O	01,09,20,40,16					
Appendix 9 List							
Complete	AP9**C	01,09,20,40,16					
Metals / Inorganics	AP9**MI	01,09,20,40,16					
Organics	AP9**O	01,09,20,40,16					
Ionbalance							
Complete	IONBALANCE	01,09					
Cations	CATIONS	01,09					
Anions	ANIONS	01,09					

TCLP MASTER,(M40), PREPS : THESE ARE NO LONGER INCLUDED IN JOB CODES !!
YOU MUST PIECE THE M PREPS TOGETHER WITH DESIRED ANALYSES ; SEE FLOWCHARTS

TCLP Prep / EXTRACTABLE Organics Only *	M40TCLPO	40					
TCLP Prep / VOLATILE Organics Only	M40ZHE	40					
TCLP Prep / METALS Only	M40TCLPM	40					
TCLP Prep / METALS & EXTRACT. ORGS Only	M40TCLP	40					

* Includes Pesticides

Figure 3 - Chromotography Analyses

ORGANIC CHEMISTRY pg 1 Issued: 01/07/87 Revised: 03/03/87 Job Code : Y N

Project #	Proj Mgr:	Prepared By:	Date: / /	Spcl Inst: Y N

GROUP	Smpl Mtx	Test Mtx	Client Description	RMA Sample Numbers
A				
B				
C				
D				
E				

Hazard Label:

GC / MS ANALYSES	Test ID	Approved Test Matrices	A	B	C	D	E
Priority Pollutant Volatiles	VOA 624	01,20,40 16,46					
Priority Pollutant Semivolatiles	BNA 625	01,20,40 16,46					
Priority Pollutant Acid Organics	ACD 625	01,20,40					
Priority Pollutant Base/Neutral Organics	BN 625	01,20,40					
* Hazardous Substance List Volatiles	VOA HSL	01,20,40 16,46					
* Hazardous Substance List Semivolatiles	BNA HSL	01,20,40 16,46					
Hazardous Substance List Acid Organics	ACD HSL	01,20,40					
Hazardous Substance List Base/Neutral Org	BN HSL	01,20,40					
CLP/HSL Volatiles (TID's Included)	VOA CLP	01,20					
CLP/HSL Semivolatiles (TID's Included)	BNA CLP	01,20					
NPDES Volatile Organics	VOA 624	01					
NPDES Semivolatile Organics	BNA 625	01					
Appendix 8 or 9 Volatiles	VOA AP9	01,20,40, 16,46					
Appendix 8 or 9 Semivolatiles	BNA AP9	01,20,40, 16,46					
Appendix 8 or 9 Chlorinated Dioxins & Furans	DXN AP9	Div. 22					
Appendix 8 TID Volatiles	VOATID8	01,20,40, 16,46					
Appendix 8 TID Semivolatiles	BNATID8	01,20,40, 16,46					
TCLP Waste Characteristic Volatiles	VOATCLP	01,20,40, 16,46					
TCLP / Waste Characteristic Semivolatiles	BNATCLP	01,20,40, 16,46					
TCLP / Land Restriction Volatiles	VOA LRR	01,20,40, 16,46					
TCLP / Land Restriction Semivolatiles	BNA LRR	01,20,40, 16,46					
Refinery Hazardous Constituents Volatiles	VOA REF	01,20,40, 16,46					
Refinery Hazardous Constituents BNA	BNA REF	01,20,40, 16,46					
Polynuclear Aromatic Hydrocarbons	BN PNA	01,20,40, 16,46					
Polynuclear Aromatic Hydrocarbons SIM	BNSIPNA	01,20,40, 16,46					
Tentative Identification Volatiles	VOA TID	01,20,40, 16,46					
Tentative Identification Semivolatiles	BNA TID	01,20,40, 16,46					
Characterization Volatiles	VOA CHR	01,20,40, 16,46					
Characterization Semivolatiles	BNA CHR	01,20,40, 16,46					

C - Change Noted

* Preferred Standard Product (01 & 20 Bolded) Bolded 01 & 20 - Std. Prd.

Figure 4 - Mass Spectrometry Analyses

ORGANIC CHEMISTRY pg 2 Issued: 01/07/87 Revised: 03/03/87

GC / MS ANALYSES Cont.	Test ID	Matrices	A	B	C	D	E
Direct Aqueous Injection Volatiles	VOA DAI	01					
Direct Aqueous Injection Semivolatiles	BNA DAI	01					
>>> OTHER <<<							
TCLP Prep for Organics Only	TCLPO	M40					
TCLP Prep for Volatiles	ZHE	M40					
TCLP Prep for Organics & Metals	TCLP	M40					

Item Number	Changes

Comments To Sample Receiving :

Figure 4 - Mass Spectrometry Analyses

. JOB CODES pg 1. Issued: 03/03/87 Revised: 02/03/87

SDWA Drinking Water Parameters	J.CODE ID	Matrices	A	B	C	D	E
Primary Complete	SDWAP**C	01,09					
Primary Metals	SDWAP**M	01,09					
Primary Inorganics	SDWAP**I						
Primary Radiochemistry	SDWAP**R	01,09					
Primary Organics	SDWAP**O	01,09					
Secondary Metals / Inorganics	SDWAS**MI	01,09					
Priority Pollutants							
Complete	PP**C	01,09,20,40					
Metals	PP**M	01,09,20,40					
Inorganics	PP**I	01,09,20,40					
Organics	PP**O	01,09,20,40					
Hazardous Substance List							
Complete	HSL**C	01,09,20,40					
Metals/Inorganics	HSL**MI	01,09,20,40					
Organics	HSL**O	01,09,20,40					
CLP / EPA Report Packages							
Complete	CLP C						
Metals / Inorganics	CLP MI						
Organics	CLP O						
RCRA Groundwater - Monitoring Parameters							
Suitability Complete	RCRAS**C	01,09					
Suitability Metals	RCRAS**M	01,09					
Suitability Inorganics	RCRAS**I	01,09					
Suitability Radiochemistry	RCRAS**R	01,09					
Suitability Organics	RCRAS**O	01,09					
Quality Metals / Inorganics	RCRAQ**MI	01,09					
Indicator Inorganics	RCRAI**I#	01,09					
Waste Characteristics Tests							
WC Inorganics	RCRAWC40I	40					
EPI/ Metals	EPI RCRM						
EPI/ Organics	EPI RCRO						
EPII Oily Waste Metals	EPII RCRM						

S-Single, Q-Quad For 01 & 09 Matrices Only

Figure 4 - Mass Spectrometry Analyses

JOB CODES pg 2. Issued: 03/03/87 Revised: 02/0[illegible]/87

Refinery Hazardous Constituents (HC)	J.CODE ID	Matrices	A	B	C	D	E
HC Complete	REFHC**C	01,09,20,40					
HC Metals	REFHC**M	01,09,20,40					
HC Organics	REFHC**O	01,09,20,40					
Waste Characteristics - Refinery							
Inorganics	REFWC**I	40					
EPI Metals	EPI REFM						
EPII Oily Waste Metals	EPII REFM						
Appendix 8 List							
Complete	AP8**C	01,09,20,40					
Metals / Inorganics	AP8**MI	01,09,20,40					
Organics	AP8**O	01,09,20,40					
Appendix 9 List							
Complete	AP9**C	01,09,20,40					
Metals / Inorganics	AP9**MI	01,09,20,40					
Organics	AP9**O	01,09,20,40					
Ionbalance							
Complete	IONBALANCE	01,09					
Cations	CATIONS	01,09					
Anions	ANIONS	01,09					
TCLP - Refinery							
Complete	TCLPREF						
Metals	TCLPREFM						
Semivolatiles	TCLPREFBNA						
Volatiles	TCLPREFVOA						
TCLP - Waste Characteristics 6/13/86 Federal Registry							
(Federal Register) Complete	TCLPC						
Metals	TCLPM						
Semivolatiles	TCLPBNA						
Herbicides	TCLPHERB						
Pesticides	TCLPPEST						
TCLP - Land Restriction Rule							
Complete	TCLPLRRC						
TCLP Other							
601 List	TCLP601						
602 List	TCLP602						
PNA by 610	TCLPPNA						
Other							
RCRA Metals	RCRA**M	01,09,20,40					

Figure 4 - Mass Spectrometry Analyses

STANDARD
OPERATING
PROCEDURE

Subject or Title:		Page 1 of 7
SAMPLE RECEIPT AND CHAIN OF CUSTODY - REFER TO QAPP SECTION 7.1		
SOP No.: LP-RMA-0005	Revision No.: Original	Effective Date: 12/9/87
Supersedes:		

1. Purpose:

To document receipt of all samples to the laboratory. To notify lab personnel of all incoming samples. To notify lab personnel of arriving samples that contain short holding parameters. To record the transfer of samples from the client to the lab.

2. Policies:

Always assign a project number to every group of samples that arrive at the lab regardless of whether work is proceeded on them or not.

Project numbers are assigned in numerical order. USGS and MKE samples receive separate series of numbers. MKE samples require special chain of custody tracking.

3. Safety:

Always wear gloves and glasses while unpacking coolers. Coolers containing strong smelling samples must be unpacked under the hood area.

4. Procedure:

a. As samples arrive they are given a unique project number for each group of samples from one client and recorded in the log book (Figure 1).
b. Fill out the Sample checklist (Figure 2) while unpacking the samples.
c. For samples arriving by a courier check that the custody seals are intact.
d. Open the coolers, unpack the samples and check the information written on the chain of custody against what was received. Note any discrepancies such as missing samples, or broken bottles on the chain of custody form.
e. Label all the samples (usually by sampling sites) with a project number and unique sample number (1,2,3,etc.). Record these numbers on the chain of custody next to the client identifications.

Prepared by:	Date:
[signature]	12/10/87
Manageme[illegible] [illegible]pp[illegible]val:	Date: 2 10/87
QA [illegible] [illegible]pp[illegible]va[illegible]:	Date: 12/9/87

f. Sign and date the Chain of Custody (Figure 3). For samples hand delivered have the client sign and relinquish the custody. Always retain the top copy with the samples and only give a bottom copy to the client.
g. Look for any inorganic short holding parameters and sign in these samples on the inorganic short holding clipboard (Figure 4). Look for any volatile parameters and sign these samples in on the Volatile clipboard (Figure 5).
h. Take a picture of the samples. Label a manila file folder with the project number. Place the picture, checklist, chain of custody and any paperwork received in the folder.
i. Deliver the file folder to the appropriate project manager.
j. Place the samples in boxes and store in the walk in cooler on special shelves pending log in. Bottles needed to analyze the short holding parameters are placed in a special location in the walk in cooler.

5. Responsibilities:

Sample receiving personnel are responsible for signing the chain of custody upon receipt of samples, for knowing the location of the samples except when used by an analyst, and for signing out maximum security samples. Sample receiving personnel are responsible for noting the short holding parameters only when indicated on the paperwork from the client. Client managers must notify sample receiving if others are to be included.

6. Comments:

For maximum security of samples (beyond the storage in the secured facility) an internal chain of custody is provided. Analysts must sign for the samples in a special book and sign them in on return. The samples are stored in one of 3 locked refrigerators.

PROJECT #	CLIENT	PROJECT NAME	MATRIX	DEL. BY	DIV	DATE	MANAGER	LOCATED

Figure 1 - Log Book Record

PROJECT # [ ][ ][ ][ ][ ] DIV: [ ][ ][ ][ ]

COMPANY NAME: _____

SAMPLE CHECKLIST DONE BY: _____

____COOLER(S)#_____(RMAL/CLIENT)	Y	N
PICTURE TAKEN:		
SEALS INTACT:		
COOLER TEMP OK:		
BOTTLES BROKEN OR LEAKING:		
CONTAINERS LABELED:		
RADIATION DETECTION:		
CHAIN OF CUSTODY:		
CC AGREES WITH SAMPLES:		
VOA SAMPLES FILLED COMPLETLY:		
SEDIMENT PRESENT IN WATERS:		
SAMPLE CORRECTLY PRESERVED:		
SHORT HOLDING TIMES:		

( )MS ( )VOA ( )602 ( )IN

SAMPLE MATRIX: ( )WATER ( )SOIL ( )WASTE

OTHER: _____

TYPE OF BOTTLES: ( )RMA ( )CLIENT

DISCREPANCES: _____

Figure 2 - Sample Checklist

Enseco - Rocky Mountain Analytical

4955 Yarrow Street
Arvada, Colorado 80002
303/421-6611 Facsimile: 303/431-7171

CHAIN OF CUSTODY

No.

Attn: _____

Enseco Client _____

Project _____

Sampling Co. _____

Sampling Site _____

Team Leader _____

SAMPLE SAFE™ CONDITIONS

1. Packed by: _____ Seal # _____
2. Seal Intact Upon Receipt by Sampling Co.: Yes No
3. Condition of Contents: _____
4. Sealed for Shipping by: _____
5. Initial Contents Temp.: _____ °C Seal # _____
6. Sampling Status: Done Continuing Until _____
7. Seal Intact Upon Receipt by Laboratory: Yes No
8. Contents Temperature Upon Receipt by Lab: _____ °C
9. Condition of Contents: _____

Date	Time	Sample ID/Description	Sample Type	No. Containers	Analysis Parameters	Remarks

CUSTODY TRANSFERS PRIOR TO SHIPPING

	Relinquished by: (signed)	Received by: (signed)	Date	Time
1				
2				
3				

SHIPPING DETAILS

Delivered to Shipper by: _____

Method of Shipment: _____ Airbill # _____

Received for Lab: _____ Signed: _____ Date/Time _____

Enseco Project No. _____

White and Pink Copies to Lab Yellow to Sampler SS-001

Figure 3 - Sample Chain of Custody Record

INORGANIC SHORT HOLDING TIME PARAMETERS RECEIVED: _____ THIS PAGE COMPLETED: _____

SAMPLE NUMBERS:							
CALL DATE/TIME:							
PUT ON LIST BY/TIME:							
LABELS CHECKED:							
24 HRS	COLIFORMS (TOTAL)						
	COLIFORMS (FECAL)						
	Cr (VI)						
	ALKALINITY						
	pH (Q = Quad)						
	CN(A) (Q = Quad)						
	RES. CHLORINE						
	SULFITE						
	ODOR						
48 HRS	BOD						
	COLOR						
	MBAS (SURFACTANTS)						
	NITRATE-N						
	NITRITE-N						
	ORTHO-PHOSPHATE						
	TURBIDITY						
	SETTLEABLE SOLIDS						
	IC SCAN						

SOP No. LP-RMA-0005
Page: 6 of 7
Date: 12/9/87
Revision: Original

Figure 4 - Inorganic Short Holding Clipboard

* MS/QC SHORT HOLDING TIMES.

DATE: _____

PROJECT NUMBER :							
COLL. DATE / TIME :							
REC. DATE / TIME :							
PROJECT MANAGER :							
MASS SPEC:							
HSL							
P. POLLUTANTS							
Refinery							
TCLP							
APPENDIX-IX							
G. C. :							
BTEX							
602							
UNKNOWN	see manager	see manager	see manager	see manager	see manager	see manager	see manager
DONE BY							
COMMENTS:							

Figure 5 - Volatile Clipboard

APPENDIX B

STANDARD OPERATING PROCEDURE

DETERMINATION OF LOW LEVEL (PART PER TRILLION)

PAH AND HETEROCYCLES IN WATER

QUALITY ASSURANCE BRANCH

NOV 15 1988

ENVIRONMENT SERVICES DIVISION

Title: DETERMINATION OF LOW LEVEL (PART PER TRILLION)

PAH AND HETEROCYCLES IN WATER

1.0 Summary of the Method

This method has been designed for the analysis of polynuclear aromatic hydrocarbons (PAH) and heterocyclic compounds at the part per trillion level (ppt,ng/L) in water. The analysis is carried out by isolation of the target analytes by liquid-liquid extraction of the water sample with an organic solvent. Quantitation of the isolated target analytes is performed by gas chromatography mass spectrometry (GC/MS) in the selected ion monitoring mode (SIM). The compounds listed in Table 1 can be quantitatively determined using this analytical method.

This method has two options for the extraction of the samples depending on the sample type. The two options include a low and medium level extraction. The low level option has typical detection limits of 1.0 to 2.5 ppt. The medium level option is forty times higher in detection limits. A volume of sample dependent of the extraction option chosen is extracted with methylene chloride. Analysis of concentrated extract is performed by gas chromatography/mass spectrometry using the selected ion monitoring scanning mode under electron impact ionization conditions.

2.0 Interferences

Method interferences may be caused by contaminants in solvents, reagents, glassware, and other sample processing hardware that lead to discrete artifacts and/or elevated baselines in the ion current profiles. All of these materials must be routinely demonstrated to be free from interferences under the conditions of the analysis by running laboratory reagent blanks.

Matrix interferences may be caused by contaminants that are coextracted from the sample. The extent of matrix interferences will vary considerably from source to source, depending upon the nature of the environment being sampled.

An interference which is unique to selecting ion monitoring techiques can arise from the presence of an interfering compound which contains the quantitation mass ion. This event results in a positive interference to the reported value for the compound of interest. This interference is controlled to some degree by acquiring data for a confirmation ion. If the ion ratios between the quantitation ion and the confirmation ion are not the specified limits, then interferences may be present.

3.0 Apparatus and Materials

3.1 Glassware

Glassware must be scrupulously cleaned. Clean all glassware as soon as possible after use by rinsing with the last solvent used in it. This should be followed by detergent washing with hot water, and rinses with tap water, reagent water, then methanol.

Glassware should then be oven dried at 150°C for 30 minutes, and heated in a muffle furnace at 400°C for 15 to 30 minutes. Solvent rinses with benzene and methylene chloride may be substituted for the muffle furnace heating. Volumetric glassware should not be heated in a muffle furnace. After drying and cooling, glassware should be sealed and stored in a clean environment to prevent any accumulation of dust or other contaminants.

Store glassware inverted or capped with aluminum foil. The use of high purity reagents and solvents helps to minimize interference problems. Purification of solvents by distillation in all-glass systems may be required.

3.1.1 Separatory funnel - 2000 and 4000 ml, with Teflon stopcock.

3.1.2 Drying column - glass funnel with ~10 cm anhydrous sodium sulfate.

3.1.3 Concentrator tube, Kuderna-Danish - 10 mL, graduated (Kontes K-570050-1025 or equivalent). Calibration must be checked at the volumes employed in the test. Ground-glass stoppers are used to prevent evaporation of extracts.

3.1.4 Snyder column, Kuderna-Danish - Three-ball macro (Kontes K-503000-0121 or equivalent).

3.1.5 Evaporative flask, Kuderna-Danish - 500 mL (Kontes K-570001-0500 or equivalent). Attach to concentrator tube with springs or clips.

3.1.6 Nitrogen evaporation device equipped with a water bath that can be maintained at 35-40°C. The N-Evap by Organomation Associates, Inc., South Berlin, MA (or equivalent) is suitable.

3.1.7 Micro reaction vessels, 2.0 mL (Supelco 3-3295).

3.2 Gas Chromatograph

The analytical system includes a temperature programmable gas chromatograph and all required accessories including syringes, analytical columns, and gases. The injection port is designed for on-column injection when using packed columns and for spitless injection when using capillary columns.

3.3 Column

A Quadrex 25 meter fused silica capillary column coated with DB5 bonded phase, or equivalent.

3.4 Mass Spectrometer

A mass spectrometer operating at 70 ev (nominal) electron energy in the electron impact ionization mode and tuned to maximize the sensitivity of the instrument to the compounds being analyzed. The GC capillary column is fed directly into the ion source of the mass spectrometer.

A computer system interfaced to the mass spectrometer allows the continuous acquisition and storage on machine-readable media of all mass spectra obtained throughout the duration of the chromatographic program. The computer has software that allows searching any GC/MS data file for ions of a specific mass and plotting such ion abundances versus time or scan number. The computer allows acquisition at pre-selected mass windows for selected ion monitoring.

4.0 Reagents

4.1 Reagent water

Reagent water is defined as water in which the target compounds are not observed at or above the method detection limit.

4.2 Solvents

Acetone, methanol, methylene chloride, cyclohexane - Burdick & Jackson, distilled in glass, or equivalent.

4.3 Sodium sulfate

(ACS) Granular, anhydrous. Purify by heating at 400°C for 4 hours in a shallow tray.

4.4 Surrogate Spiking Solution

Depending on the extraction option chosen low or medium a surrogate solution is made by weighing an appropriate aliquot of each purified crystal into a volumetric flask and diluting to volume with methanol or acetone and added to the sample prior to extraction in methylene chloride. The compounds in the surrogate solutions are naphthalene-d8, fluorene-d10, and chrysene-d12. The low surrogate solution is at 10 ng/ml and 0.5 ml per liter of sample is added. The medium surrogate solution is at 1000 ng/ml and 1.0 ml is added to the 500 ml sample.

4.5 Internal Standard Solutions

A solution containing ca. 400 ng/mL of each internal standard is prepared by weighing an appropriate aliquot of each purified crystal into a volumetric flask and diluting to volume with methylene chloride. Fifty microliters of this solution is added to the 0.5 ml extract prior to analysis to give a concentration of the internal standards in the extract of 40 ng/mL.

4.6 Matrix Recovery Standard Spiking Solution

A solution containing the following compounds at the listed concentrations is prepared by weighing an appropriate aliquot of each purified crystal into a volumetric flask and diluting to volume with methanol or acetone. The concentrations of the spiking solution for both the low and medium level extractions are shown below:

Compound	Low Spiking Solution Concentration (ng/ml)	Medium Spiking Solution Concentration (ng/ml)
Naphthalene	20	2000
Fluorene	20	2000
Chrysene	20	2000
Indene	20	2000
Quinoline	20	2000
Benzo(e)pyrene	20	2000
2-methyl naphthalene	20	2000

The low spiking solution at 0.5 ml per liter of sample. The medium level spiking solution is added at 1.0 ml per 500 ml of sample.

5.0 Sample Preservation, Storage and Holding Times

5.1 Sample Preservation and Storage

The samples must be protected from light and refrigerated at 4°C (± 2°C) from the time of receipt until extraction and analysis. After analysis, extracts and unused sample volume must be protected from light and refrigerated at 4°C (± 2°C).

5.2 Holding Times

Samples must be extracted within 5 days of the time of sample receipt. Two days are allowed to ship samples from the field to the laboratory. The total time allowed from sample collection until extraction is therefore 7 days.

Extracts must be analyzed within 40 days of extraction.

6.0 Sample Extraction

6.1 Samples

pH>12 only

Samples are extracted at ph>12. A measured amount of sample is poured into a separatory funnel with the surrogate spiking solution. The surrogate solution is added as described in section 4.4. For the low extraction the sample size is 4-liters. Each 4-liter sample is separated into two 2-liter aliquots. The extract is then combined at the end of the extraction for concentration. The medium level extraction requires 500 ml of sample. The sample aliquots medium or low are then extracted three times (medium 60 mL; low 80 mL) with methylene chloride. The three methylene chloride extracts are passed through an anhydrous sodium sulfate drying column, and combined in a Kuderna-Danish evaporative concentrator.

The low level extract is concentrated to approximately 0.5 mL and transferred to a 2.0 mL microreaction vessel. The methylene chloride is evaporated using a nitrogen stream. The evaporative concentrator tube is successively rinsed with methylene chloride, the rinsings added to the reaction vessel and the methylene chloride again evaporated. This process is continued until at least five (5) 1 mL rinsings of the tube have occurred.

The final methylene chloride extract for the low level extraction is evaporated to 500 ul. All microreaction vessels

are permanently marked at the 500 ul level and additional methylene chloride added, when necessary, to insure a final 500 ul extract volume. The medium level extract is concentrated to 5.0 ml using the same procedure described above. The extract vessels are capped with a Teflon fitted septum cap and stored at 4°C prior to GC/MS analysis.

6.2 Method blank

Method blanks are prepared by treating a 4-L or 500 ml of laboratory reagent water exactly as described above depending on the option chosen. A method blank must be performed once each case*, each 14 calendar day period during which samples in a case are received, with every 20 samples of similar concentration and/or sample matrix or whenever samples are extracted by the same procedure, whichever is most frequent.

* A case is a group or a set of samples collected from a particular site over a given period of time.

6.3 Matrix Recovery Sample

Matrix recovery samples are prepared by spiking a sample as described in section 4.6. The fortified sample is extracted exactly as described above for samples. The laboratory will spike and analyze 5% matrix spike samples (i.e. one matrix spike with every 20 samples).

6.4 Duplicate Sample

For a minimum of 10% of the samples analyzed a duplicate sample will be taken at sampling and a duplicate analysis will be performed. This will be carried out to insure that an estimate of precision will be available.

7.0 GC/MS Calibrations

Prior to use of the method for low level analysis of PAH, a five-point response factor calibration curve must be established showing the linear range of the analysis. The concentrations of standards used to construct the calibration curve are 20, 40, 240, 1200, and 4800 ng/mL. These concentrations correspond to 2.5, 5, 30, 150, and 600 ng/L and 200, 400, 2400, 12000, and 48000 ng/L in the low and medium level methods, respectively. If the concentration of any target compound in a sample exceeds the linear range defined by the standards above, the extract must be diluted so that the

concentrations of all target compounds fall within the range of the calibration curve. For every 12 hours of GC/MS analysis, the mass spectrometer response for each PAH relative to the internal standard is determined, as described in the Calculations section, using daily check standards at concentrations of 40 ng/mL. Daily response factors for each compound must be compared to the initial calibration curve. If the daily response factors are within ~~±35~~ percent of the corresponding calibration curve value the analysis may proceed. If, for any analyte, the daily response factor is not within ~~±35~~ percent of the corresponding calibration curve value, a five-point calibration curve must be repeated for that compound prior to the analysis of samples. <35% <35%

Qualitative identification of target compounds will follow the relative retention time (RRT) criteria. Table 2 contains example RRT data for these compounds.

8.0 Daily GC/MS Performance Tests

The GC/MS will not be tuned to meet decafluorotriphenylphosphine (DFTPP) ion abundance criteria. EPA has dropped this requirement for selected ion monitoring (SIM) methods. This allows the laboratory to tune the instrument to maximize the sensitivity for the compounds being analyzed as described below.

Mass tuning will be performed using the mass calibration compound FC43. Tuning will be performed to maximize the sensitivity of the mass spectrometer for the mass range of compounds being analyzed. In the FC43 spectra, the ion abundance of masses 131 and 219 are adjusted to a approximate ratio of 1:1. These two ions are then maximized to be approximately 50 to 70% of the ion abundance of the base mass 69. This procedure maximizes the sensitivity of the instrument in the mass region of interest for the PAH analysis.

9.0 Gas Chromatography/Mass Spectrometry Analysis

Just prior to analysis an aliquot of internal standard solution is transferred to the sample vial using a 250 uL syringe to give a final internal standard concentration of 40 ng/mL in the extract. Representative aliquots are injected into the capillary column of the gas chromatograph using the following, or similar conditions:

Injector Temp - 250°C
Transfer Line Temp - 290°C
Initial Oven Temp - 30°C
Initial Hold Time - 1 min.
Ramp Rate - 10°C/min.
Final Temperature - 325°C

The effluent from the GC capillary column is fed directly into the ion source of the mass spectrometer. The MS is operated in the selected ion monitoring (SIM) mode using appropriate windows to include the quantitation and confirmation masses for each PAH as shown in Table 1. For all compounds detected at a concentration above the MDL, a check is made to insure the confirmation ion is present.

10.0 Calculations

10.1 Qualitative Identification

Obtain EICPs for the primary m/z and the confirmatory ion. The following criteria must be met to make a qualitative identification:

The characteristic masses of each parameter of interest must maximize in the same or within one scan of each other.

The retention time must fall within ±30 s of the retention time of the authentic compound.

The relative peak heights of the primary ion compared to the confirmation or secondary ion masses in the EICPs must fall within ±20% of the relative intensities of these masses in a reference mass spectrum. The reference mass spectrum can be obtained from a standard analyzed in the GC/MS system or from a reference library. In some instances a compound that does not meet secondary ion confirmation criteria may still be determined to be present in a sample after close inspection of the data by the mass spectrometric specialist. Supportive data includes the presents of the secondary ion but the ratio is greater than ± 20% of the primary ion which may be caused by an interference of the secondary ion. When the primary ion is not affected by interferences and the decision is agreed to by the reviewer, the compound is flagged with an asterisk (*) on the sample summary sheet.

Structural isomers that have very similar mass spectra and less than 30 s difference in retention time, can be explicitly identified only if the resolution between authentic isomers in a standard mix is acceptable. Acceptable resolution is achieved if the baseline to valley height between the isomers is less than 25% of the sum of the two peak heights. Otherwise, structural isomers are identified as isomeric pairs.

10.2 Quantitation

The following formula is used to calculate the response factors of the internal standard to each of the calibration standards.

$$RF = (A_s C_{is})/(A_{is} C_s)$$

where:

A_s = Area of the characteristic ion for the parameter to be measured.
A_{is} = Area of the characteristic ion for the internal standard.
C_{is} = Concentration of the internal standard, (ng/mL).
C_s = Concentration of the parameter to be measured, (ng/mL).

Based on these response factors, sample extract concentrations for each PAH is calculated using the following formula.

$$Ce = \frac{(A_s)(I_s)}{(A_{is})(RF)}$$

where:

Ce = Sample extract concentration (ng/mL)
A_s = Area of the characteristic ion for the parameter to be measured.
A_{is} = Area of the characteristic ion for the internal standard.
I_s = Amount of internal standard added to each extract (ng/mL).

The actual sample concentration (C) for each compound is calculated by the following formula:

$$C = (Ce) \times \frac{V_E}{V_s},$$

C = Concentration in Sample (ng/L)
V_E = The final extract volume (mL), and
V_s = The original volume of sample extracted (L).

11.0 Quality Control/Quality Assurance

11.1 GC/MS Tuning

The GC/MS is tuned as described in section 8.0.

11.2 GC/MS Initial Calibration and Continuing Calibration Check

Prior to the use of the method for low level analysis of PAH, a five-point response factor calibration curve must be established showing the linear range of the analysis.

Each calibration standard is analyzed and the area of the primary characteristic ion is tabulated against concentration for each compound. The response factor (RF) for each compound at each concentration level is calculated using the following equation:

$$RF = \frac{A_s}{A_{is}} \times \frac{C_{is}}{C_s}$$

A_s = Area of the characteristic ion for the compound to be measured.

A_{is} = Area of the characteristic ion for the specific internal standard.

C_{is} = Concentration of the internal standard

C_s = Concentration of the compound to be measured.

For every 12 hours of GC/MS analysis, the mass spectrometer response (RF) for each PAH of interest (Table 1) relative to the internal standard is determined.

These daily response factors for each compound must be compared to the initial calibration curve. The percent difference is calculated using the following equation:

$$\% \text{ Difference} = \frac{\overline{RFI} - RFC}{\overline{RFI}} \times 100$$

$\overline{RFI}$ = Average response factor from initial calibration.

RFC = Response factor from current verification check standard.

If the daily response factor are within ± 35 percent of the corresponding calibration curve value the analysis may proceed. If, for any analyte, the daily response factor is not within ± 35 percent of the corresponding calibration curve value, a five-point calibration curve must be repeated for that compound prior to the analysis of samples.

11.3 Method Blank Analysis

A method blank consists of deionized, distilled laboratory water carried through the entire analytical scheme (extraction, concentration, and analysis). The method blank volume must be approximately equal to the sample volumes being processed.

Method blank analysis are performed at the rate of one per case*, each 14 calendar day period during which samples in a case are received, with every 20 samples of similar concentration and/or sample matrix, or whenever samples are extracted by the same procedure, whichever is most frequent.

An acceptable method blank analysis must not contain any target compound in Table 1 at concentrations 5 times greater than Method Detection Limits (MDL). If the method blank does not meet these criteria, the analytical system is out of control and the source of the contamination must be investigated and corrective measures taken and documented before further sample analysis proceeds.

* A case is a group or a set of samples collected from a particular site over a given period of time.

11.4 Surrogate Compound Analysis

The laboratory will spike all samples and quality control samples with deuterated PAH surrogate compounds. The surrogate compounds will be spiked into the sample prior to extraction and this will measure individual sample matrix effects associated with sample preparation and analysis. They will include naphthalene-d_8, fluorene-d_{10}, and chrysene-d_{12}.

RMAL will take corrective action whenever the surrogate recovery for any one or more surrogates is outside the following acceptance criteria:

Surrogate	Acceptance Criteria % Low-Level
Naphthalene-d8	14-108
Fluorene-d10	41-162
Chrysene-d12	10-118

The following corrective action will be taken when required as stated above:

a) Check calculations to assure there are no errors;
b) Check internal standard and surrogate solutions for degradation, contamination, etc., and check instrument performance;
c) If the surrogate recovery is outside the control limits, the secondary ion may be used to check the quantitation of the surrogate. If the secondary ion meets within the control limits this recovery is reported with flag of # next to the percent recovery.
d) If the upper control limit is exceeded for only one surrogate, and the instrument calibration, surrogate standard concentration, etc. are in control, it can be concluded that an interference specific to the surrogate was present that resulted in high recovery and this interference would not affect the quantitation of other target compounds. The presence of this type of interference can be confirmed by evaluating the chromatographic peak shapes in ion intensities of the surrogate.
e) If the surrogate could not be measured because the sample required a dilution, no corrective action is required. The recovery of the surrogate is recorded as D with the note surrogate diluted out.
f) Reanalyze the sample or extract if the steps above fail to reveal a problem. If reanalysis of the extract yields surrogate recoveries within the stated limits, then the reanalysis data will be used. Both the original and reanalysis data will be reported.

11.5 Matrix Spike Analysis

The laboratory will spike and analyze 5% matrix spike samples. RMAL will spike seven representative compounds into water. These compounds and the spiking levels as listed in section 4.4. The initial matrix spike criteria for data validity are as follows:

- The average of the percent recoveries for all seven compounds must fall between 20 and 150 percent.
- Only one compound can be below its required minimum percent recovery. These minimum percent recoveries are:

1) 10% for chrysene and benz(e)pyrene
2) 20% for all other compounds.

Criteria for data validity for each individual matrix spike compound will be developed as data is collected and will be updated on a quarterly basis.

If the matrix spike criteria are not met, the matrix spike analysis will be repeated. If the subsequent matrix spike analysis meets the criteria, then the reanalysis data will be used. If not, the data for the sample will be reported but qualified as being outside the acceptance criteria of the method. Both the original and reanalysis data will be reported.

11.6 Duplicates

The laboratory will analyze 10% duplicate samples. Percent difference between duplicates will be calculated for each detected compound.

12.0 Data Deliverables

Data is presented in the format described in Exhibit B of Organic SOW 7/87 for the Contract Lab Program. The various items in the data package are listed below:

1) Sample Traffic Reports or Chain-of-Custody

2) Sample Data Summary Package Including:

- Case narrative
- Tabulated target compound results by fraction
- Surrogate spike analysis results by fraction
- Matrix spike/matrix spike duplicate results by fraction
- Blank data by fraction

3) Sample Data Package including:

- Case narrative
- Traffic reports
- Semivolatiles Data

The semivolatiles data packages will include a QC summary, the raw sample data, standards data and raw QC data.

TABLE 1

COMPOUNDS AND MS QUANTITATION MASS IONS

Compound	Quantitation Mass Ion	Confirmation Ion	Internal Standard Reference
Polynuclear Aromatic Hydrocarbons (PAH)			
Naphthalene	128	102	1
Acenaphthylene	152	151	1
Acenaphthene	154	153	1
Fluorene	166	165	1
Phenanthrene	178	176	2
Anthracene	178	176	2
Fluoranthene	202	200	2
Pyrene	202	200	2
Benzo(a)anthracene	228	226	3
Chrysene	228	226	3
Benzofluoranthenes	252	250	3
Benzo(a)pyrene	252	250	3
Indeno(1,2,3,cd)pyrene	276	274	3
Dibenz(a,h)anthracene	278	279	3
Benzo(g,h,i)perylene	276	274	3
Internal Standards			
1) Acenaphthene-d10	164		--
2) Phenanthrene-d10	188		--
3) Benzo(a)pyrene-d12	264		--
Surrogates			
1) Naphthalene-d8	136	134	1
2) Fluorene-d10	176	174	1
3) Chrysene-d12	240	241	3

TABLE 1 (Continued)

Compound	Quantitation Mass Ion	Confirmation Ion	Internal Standard Reference
Heterocycles and Other PAH			
Indene	116	115	1
Indole	117	90	1
2,3-dihydroindene	117	118	1
2,3-benzofuran	118	90	1
Quinoline	129	102	1
Benzo(b)thiophene	134	89	1
2-methylnapthalene	141	115	1
1-methylnapthalene	141	115	1
Biphenyl	154	153	1
Carbazole	167	166	2
Dibenzofuran	168	139	1
Acridine	179	178	2
Dibenzothiophene	184	139	2
Perylene	252	250	3
Benzo(e)pyrene	252	250	3
Internal Standards			
1) Acenaphthene-d10	164		--
2) Phenanthrene-d10	188		--
3) Benzo(a)pyrene-d12	264		--
Surrogates			
1) Naphthalene-d8	136	134	1
2) Fluorene-d10	176	174	2
3) Chrysene-d12	240	241	3

TABLE 2

RELATIVE RETENTION TIMES AND CONFIDENCE FOR THE COMPOUNDS ASSOCIATED WITH THE LOW LEVEL PAH AND HETEROCYCLE METHODOLOGY

	Absolute Retention Time (minutes)	Avg. RRT	SD	% RSD	95% Confidence Limits
Benzofuran	8:03	0.550	0.015	2.807	0.520-0.580
Dihydroindene	8:45	0.590	0.016	2.765	0.558-0.622
Indene	8:54	0.598	0.016	2.699	0.566-0.630
Naphthalene-d8(Surr.)	11:14	0.733	0.017	2.289	0.699-0.767
Naphthalene	11:16	0.735	0.017	2.289	0.701-0.769
Benzo(b)thiophene	11:25	0.743	0.017	2.258	0.709-0.777
Quinoline	12:06	0.783	0.017	2.140	0.749-0.817
Indole	12:55	0.824	0.018	2.167	0.788-0.860
2-methylnaphthalene	12:59	0.832	0.017	2.084	0.798-0.866
1-methylnaphthalene	13:15	0.848	0.017	2.055	0.814-0.882
Biphenyl	14:12	0.901	0.017	1.921	0.867-0.935
Acenaphthylene	15:15	0.962	0.018	1.822	0.927-0.988
Acenaphthene	15:44	0.988	0.018	1.849	0.952-1.024
Dibenzofuran	16:09	1.011	0.018	1.791	0.975-1.047
Fluorene-d10(Surr.)	16:57	0.872	0.015	1.735	0.842-0.902
Fluorene	17:01	0.875	0.015	1.745	0.845-0.905
Dibenzothiophene	19:08	0.974	0.016	1.617	0.942-1.006
Phenanthrene	19:28	0.988	0.016	1.589	0.956-1.020
Anthracene	19:34	0.994	0.016	1.597	0.962-1.026
Acridine	19:42	0.999	0.016	1.572	0.967-1.031
Carbazole	20:02	1.013	0.015	1.487	0.983-1.043
Fluoranthene	22:32	1.130	0.017	1.461	1.096-1.164
Pyrene	23:07	1.157	0.017	1.443	1.123-1.191
Benz(a)anthracene	26:16	0.873	0.012	1.325	0.849-0.897
Chrysene-d12 (Surr.)	26:18	0.874	0.012	1.320	0.850-0.898
Chrysene	26:22	0.876	0.012	1.320	0.852-0.900
Benzofluoranthenes	29:00	0.960	0.014	1.501	0.932-0.988
Benzo(e)pyrene	29:34	0.984	0.016	1.590	0.952-1.016
Benzo(a)pyrene	29:44	0.988	0.016	1.615	0.956-1.020
Perylene	29:55	0.996	0.016	1.644	0.964-1.028
Indeno(1,2,3 cd)pyrene	32:31	1.114	0.025	2.276	1.064-1.164
Dibenz(ah)anthracene	32:36	1.113	0.031	2.743	1.051-1.175
Benzo(ghi)perylene	33:17	1.149	0.028	2.422	1.093-1.205

TABLE 3

SELECTED ION MONITORING (SIM) SEQUENCES FOR PAH AND HETEROCYCLES

Sequence #	M/Z Scanned	Scan # Range	Start Time (min)
1	90,115,116,117,118	0 - 399	0:00
2	90,115,116,117,118	400 - 849	4:40
3	89,102,128,129,134,136	850 - 1064	9:55
4	90,115,117,141	1065 - 1169	12:26
5	151,152,153,154,164	1170 - 1354	13:39
6	139,165,166,168,176	1355 - 1524	15:49
7	139,176,178,179,184,188	1525 - 1684	17:48
8	166,167	1685 - 1799	19:40
9	200,202,226,228,240	1800 - 2299	21:00
10	241,250,252,256	2300 - 2479	26:50
11	250,252,264,268	2480 - 2649	28:56
12	274,276,278,279,302,303	2650 - 3500	30:55

TABLE 4
LOW LEVEL PNA SPIKE RESULTS

Compound	Conc. ng/L	Percent Recovery
2,3-Benzofuran #	4.3	86
2,3-Dihydroindene	4.7	94
1H-Indene #	4.3	87
Naphthalene	5.9	118
Benzo(B)thiophene #	3.8	76
Quinoline	5.9	118
1H-Indole #	4.7	94
2-Methylnaphthalene	5.0	101
1-Methylnaphthalene	4.4	87
Biphenyl	4.2	83
Acenaphthylene	4.1	82
Acenaphthene	4.4	88
Dibenzofuran	4.0	81
Fluorene	4.5	89
Dibenzothiophene #	4.2	85
Phenanthrene	5.3	105
Anthracene	4.4	89
Acridine	5.4	107
Carbazole	5.2	104
Fluoranthene	5.0	101
Pyrene	5.1	102
Benzo(A)anthracene	4.1	82
Chrysene	4.2	83
Benzo(B)fluoranthrene	4.0	80
Benzo(K)fluoranthrene	4.8	97
7,12-Dimethylbenzanthracene #	3.5	70
Benzo(E)pyrene	4.0	80
Benzo(A)pyrene	4.7	95
Perylene	4.0	80
3-Methylcholanthrene	4.0	81
Indeno(1,2,3-CD)pyrene	4.4	88
Dibenz(A,C)anthracene	4.5	90
Dibenz(A,H)anthracene	4.7	93
Benzo(G,H,I)perylene	4.9	98
Naphthalene-d8 *	---	72
Fluorene-d10 *	---	84
Chrysene-d12 *	---	74

Note: All compounds spiked at 5 ng/L.
Qualitative confirmation ion greater than +-20% of reference spectrum.
* Surrogate compound.

APPENDIX B

STANDARD OPERATING PROCEDURE

DETERMINATION OF LOW LEVEL (PART PER TRILLION) PAH AND HETEROCYCLES IN WATER

PHENOLICS, TOTAL RECOVERABLE

EPA METHOD 420.2

PHENOLICS, TOTAL RECOVERABLE

Method 420.2 (Colorimetric, Automated 4-AAP with Distillation)

STORET NO. 32730

1. Scope and Application
   1.1 This method is applicable to the analysis of drinking, surface and saline waters, domestic and industrial wastes.
   1.2 The method is capable of measuring phenolic materials from 2 to 500 *ug*/l in the aqueous phase using phenol as a standard. The working ranges are 2 to 200 *ug*/l and 10 to 500 *ug*/l.
2. Summary of Method
   2.1 This automated method is based on the distillation of phenol and subsequent reaction of the distillate with alkaline ferricyanide and 4-aminoantipyrine to form a red complex which is measured at 505 or 520 nm. The same manifold is used with the AAI or AAII.
3. Sample Handling and Preservation
   3.1 Biological degradation is inhibited by the addition of 1 g/l of copper sulfate to the sample and acidification to a pH of less than 4 with phosphoric acid. The sample should be kept at 4°C and analyzed within 24 hours after collection.
4. Interference
   4.1 Interferences from sulfur compounds are eliminated by acidifying the sample to a pH of less than 4.0 with H_3PO_4 and aerating briefly by stirring and adding $CuSO_4$.
   4.2 Oxidizing agents such as chlorine, detected by the liberation of iodine upon acidification in the presence of potassium iodide, are removed immediately after sampling by the addition of an excess of ferrous ammonium sulfate (6.5). If chlorine is not removed, the phenolic compounds may be partially oxidized and the results may be low.
   4.3 Background contamination from plastic tubing and sample containers is eliminated by filling the wash receptacle by siphon (using Kel-F tubing) and using glass tubes for the samples and standards.
5. Apparatus
   5.1 Technicon AutoAnalyzer (I or II)
      5.1.1 Sampler equipped with continuous mixer.
      5.1.2 Manifold.
      5.1.3 Proportioning pump II or III.
      5.1.4 Heating bath with distillation coil.
      5.1.5 Distillation head.
      5.1.6 Colorimeter equipped with a 50 mm flow cell and 505 or 520 nm filter.
      5.1.7 Recorder.
6. Reagents
   6.1 Distillation reagent: Add 100 ml of conc. phosphoric acid (85% H_3PO_4) to 800 ml of distilled water, cool and dilute to 1 liter.

Issued 1974

6.2 Buffered potassium ferricyanide: Dissolve 2.0 g potassium ferricyanide, 3.1 g boric acid and 3.75 g potassium chloride in 800 ml of distilled water. Adjust to pH of 10.3 with 1 N sodium hydroxide (6.3) and dilute to 1 liter. Add 0.5 ml of Brij-35. Prepare fresh weekly.

6.3 Sodium hydroxide (1N): Dissolve 40 g NaOH in 500 ml of distilled water, cool and dilute to 1 liter.

6.4 4-Aminoantipyrine: Dissolve 0.65 g of 4-aminoantipyrine in 800 ml of distilled water and dilute to 1 liter. Prepare fresh each day.

6.5 Ferrous ammonium sulfate: Dissolve 1.1 g ferrous ammonium sulfate in 500 ml distilled water containing 1 ml H_2SO_4 and dilute to 1 liter with freshly boiled and cooled distilled water.

6.6 Stock phenol: Dissolve 1.00 g phenol in 500 ml of distilled water and dilute to 1000 ml. Add 1 g $CuSO_4$ and 0.5 ml conc. H_3PO_4 as preservative. 1.0 ml = 1.0 mg phenol.

6.7 Standard phenol solution A: Dilute 10.0 ml of stock phenol solution (6.6) to 1000 ml. 1.0 ml = 0.01 mg phenol.

6.8 Standard phenol solution B: Dilute 100.0 ml of standard phenol solution A (6.7) to 1000 ml with distilled water. 1.0 ml = 0.001 mg phenol.

6.9 Standard solution C: Dilute 100.0 ml of standard phenol solution B (6.8) to 1000 ml with distilled water. 1.0 ml = 0.0001 mg phenol.

6.10 Using standard solution A, B or C prepare the following standards in 100 ml volumetric flasks. Each standard should be preserved by adding 0.1 g $CuSO_4$ and 2 drops of conc. H_3PO_4 to 100.0 ml.

ml of Standard Solution	Conc. ug/l
Solution C	
1.0	1.0
2.0	2.0
3.0	3.0
5.0	5.0
Solution B	
1.0	10.0
2.0	20.0
5.0	50.0
10.0	100.0
Solution A	
2	200
3	300
5	500

7. Procedure

7.1 Set up the manifold as shown in Figures 1 or 2.

7.2 Fill the wash receptacle by siphon. Use Kel-F tubing with a fast flow (1 liter/hr).

7.3 Allow colorimeter and recorder to warm up for 30 minutes. Run a baseline with all reagents, feeding distilled water through the sample line. Use polyethylene tubing for

sample line. When new tubing is used, about 2 hours may be required to obtain a stable baseline. This two hour time period may be necessary to remove the residual phenol from the tubing.

7.4 Place appropriate phenol standards in sampler in order of decreasing concentration. Complete loading of sampler tray with unknown samples, using glass tubes.
NOTE 1: If samples have not been preserved as instructed in (3.1), add 0.1 g $CuSO_4$ and 2 drops of conc. H_3PO_4 to 100 ml of sample.

7.5 Switch sample line from distilled water to sampler and begin analysis.

8. Calculation

8.1 Prepare standard curve by plotting peak heights of standards against concentration values. Compute concentration of samples by comparing sample peak heights with standards.

9. Precision and Accuracy

9.1 In a single laboratory (EMSL), using sewage samples at concentrations of 3.8, 15, 43 and 89 *ug*/1, the standard deviations were ±0.5, ±0.6, ±0.6 and ±1.0 *ug*/1, respectively. At concentrations of 73, 146, 299 and 447 *ug*/1, the standard deviations were ±1.0, ±1.8, ±4.2 and ±5.3 *ug*/1, respectively.

9.2 In a single laboratory (EMSL), using sewage samples at concentrations of 5.3 and 82 *ug*/1, the recoveries were 78% and 98%. At concentrations of 168 and 489 *ug*/1, the recoveries were 97% and 98%, respectively.

Bibliography

1. Technicon AutoAnalyzer II Methodology, Industrial Method No. 127–71W, AAII.
2. Standard Methods for the Examination of Water and Wastewater, 14th Edition, p 574, Method 510 (1975).
3. Gales, M.E. and Booth, R.L., "Automated 4 AAP Phenolic Method", AWWA 68, 540 (1976).

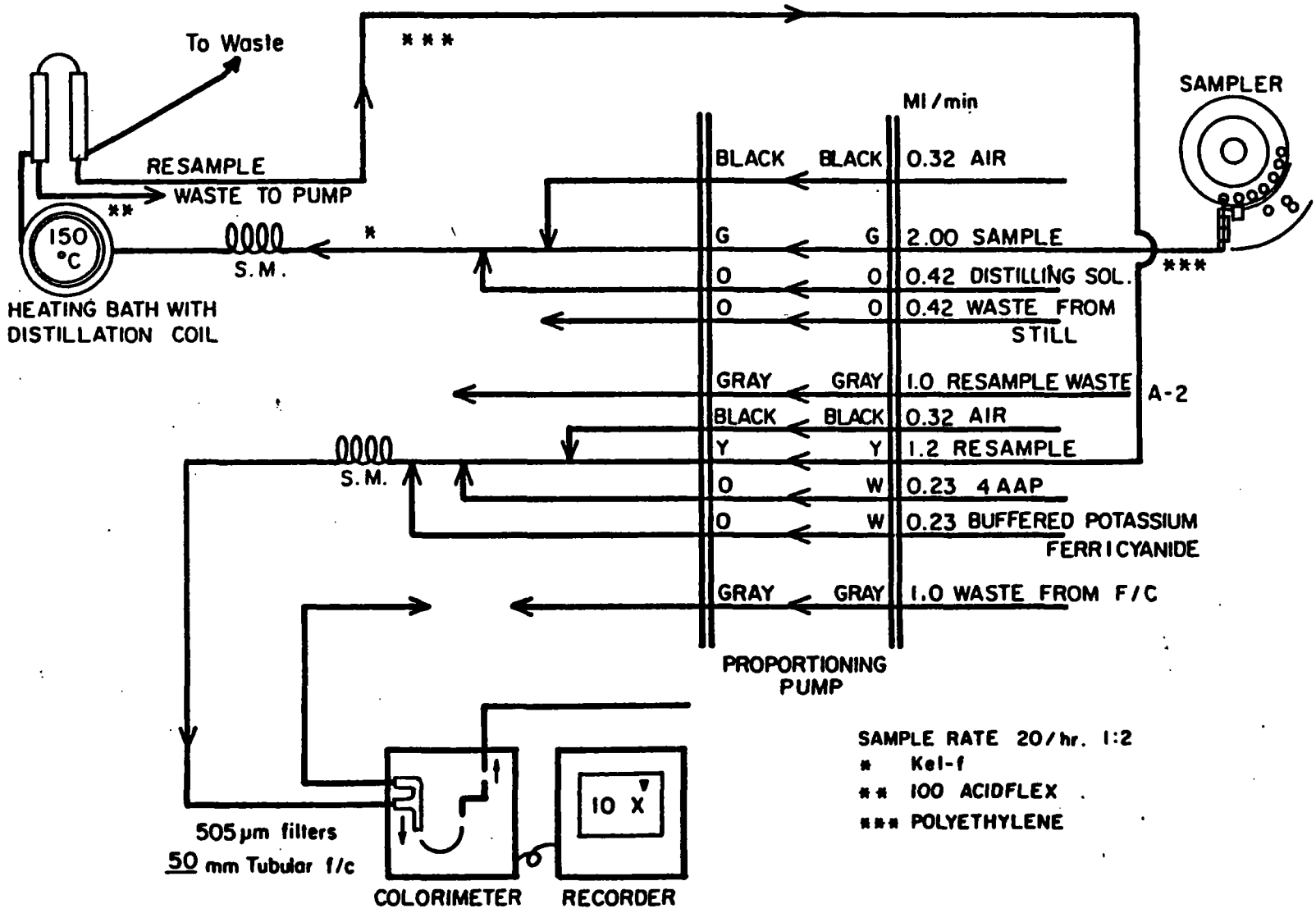

FIGURE 1. PHENOL AUTO ANALYZER I

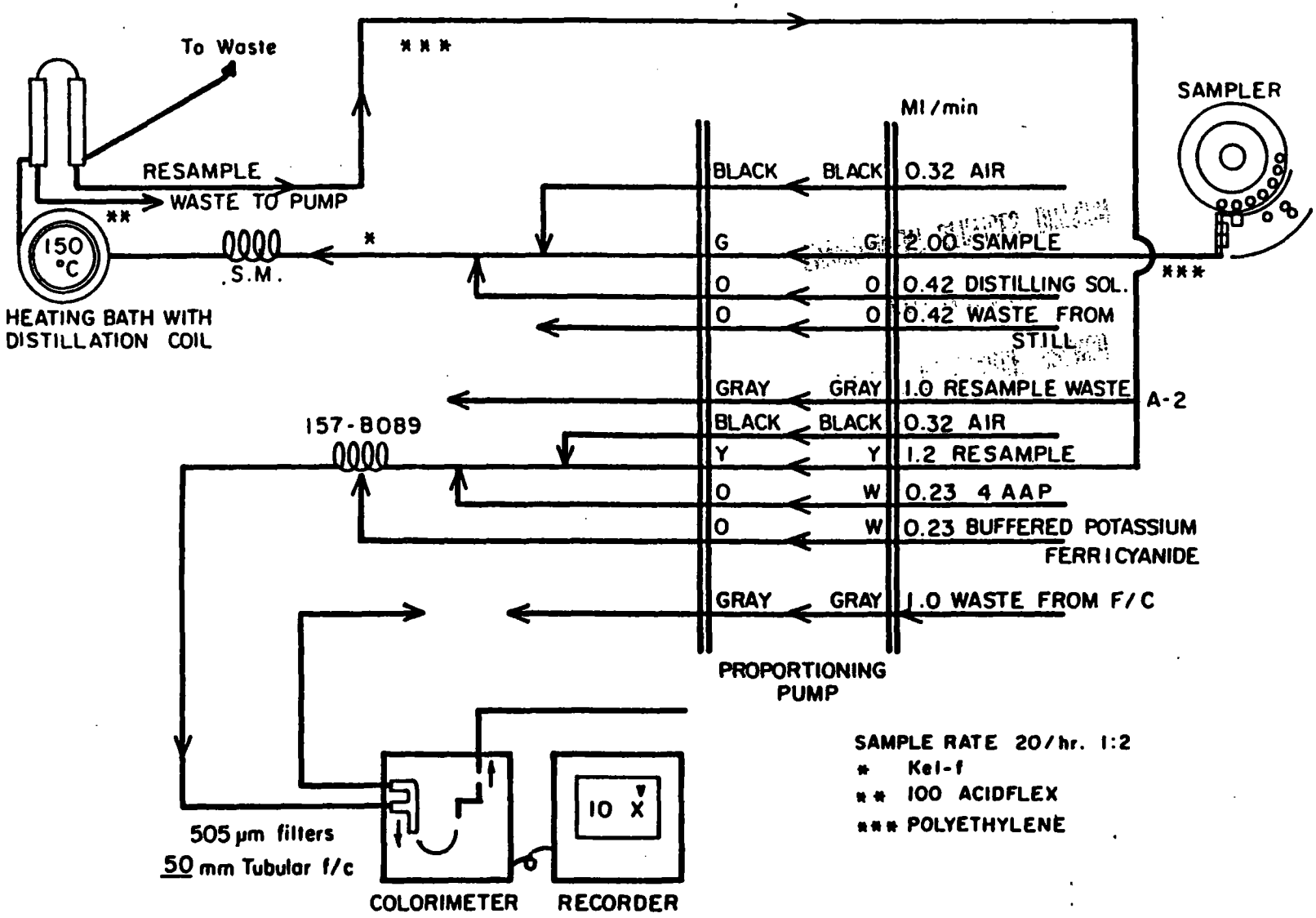

FIGURE 2. PHENOL AUTO ANALYZER II

HEALTH AND SAFETY PLAN

QUALITY ASSURANCE BRANCH

NOV 15 1988

ENVIRONMENT SERVICES DIVISION

HEALTH AND SAFETY PLAN

Introduction

This Health and Safety Plan applies to personnel who will potentially be exposed to groundwater affected by creosote or coal tar constituents during the retrieval of groundwater samples from active pumping wells, the GAC plant, monitor wells, and piezometers. This plan has been designated to comply with, as a minimum, the requirements set forth in 29 CFR 1910.120, the OSHA standards governing hazardous waste operations. In no case may work be performed in a manner that conflicts with the intent of or the safety concerns expressed in this plan.

Materials of Concern and effects of Overexposure

The materials of concern which have been identified for this project are coal tar and creosote related materials including naphthalene, other polynuclear aromatic hydrocarbons (PAH) and phenolic compounds.

Coal tar and creosote are typically irritating to the eyes, skin and respiratory tract. Acute skin contact may cause burning and itching while prolonged contact and poor hygiene practices may produce dermatitis. Prolonged skin contact with creosote must be avoided to prevent the possibility of skin absorption.

Naphthalene is a hemolytic agent which, upon overexposure to the vapor or ingestion of the solid, may produce a variety of symptoms associated with the breakdown of red blood cells. Naphthalene is also irritating to the eyes and repeated or prolonged contact has been associated with the production of cataracts.

Repeated exposure to certain PAH compounds has been associated with the production of cancer. Contact of PAH compounds with the skin may cause photosensitization of the skin producing skin burns after subsequent exposure to ultraviolet radiation.

Phenolics are generally strong irritants which can have a corrosive effect on the skin and can also rapidly penetrate the skin. Overexposure to phenols and phenolic compounds may cause convulsions as well as liver and kidney damage.

Hazard Assessment

Initial

Because of the relatively low vapor pressures associated with PAH compounds (generally less than 10^{-4} mm Hg at $20^{o}C$), they are not expected to present a vapor hazard. The most likely threat of exposure to these compounds will be via skin contact.

TABLE 1

ACTION LIMITS FOR AIR CONTAMINANTS

Limit	Persistent Concentration in the Breathing Zone	Procedure
Lower	5 ppm	Don respirators, step up monitoring.
Upper	50 ppm	Stop work and back off from immediate work area until levels subside in the breathing zone.

Action Limits

The American Conference of Governmental Industrial Hygienists (ACGIH) has established threshold limit values (TLV) for phenol and naphthalene at 5 and 10 ppm, respectively, as 8-hour time weighted averages (TWA). Based on these values, the action limits in Table 1 have been set. The lower limit of 5 ppm is based on the TLV for phenol while the upper limit of 50 ppm is based on a minimum protection factor of 10 for a half-mask, air purifying respirator.

Response

When the PID yields persistent breathing-zone readings at or above the lower action limit, workers in the affected area will don respirators. Air sampling will continue on a more frequent basis. If readings are persistent at or above the upper limit, workers shall back off from the immediate work area until measured breathing-zone concentrations fall below the lower limit, at which time operations will resume and normal air monitoring will continue. If breathing zone levels do not fall below the upper limit, workers are to leave the work area and report the condition immediately to the City, the Engineer, or its representative. If necessary, engineering controls will be instituted to maintain vapor concentrations below the upper limit or arrangements will be made to upgrade to Level B protection.

Personal Protective Equipment

Personal protective equipment (PPE) will be donned, as necessary, based on the hazards encountered. Listed below is the personal protective equipment to be utilized during this project and the conditions requiring its use.

Personal Protective Equipment

- Coveralls - Polyethylene coated Tyvek if work involves contact with affected soil or groundwater.
- Boots - Chemical resistant type if work involves contact with affected soil or groundwater.
- Hard Hat - When working in the vicinity of operating heavy machinery.
- Face shield - If splash hazard exists.
- Gloves - Nitrile for potential contact with affected soil or groundwater.
- Respirator - MSA Comfo II with GMC-H Cartridges if PID reading exceeds 5 ppm or if dust or odors become objectionable.
- Chemical Safety Goggles - If eye irritation occurs.

Because of the carcinogenicity of certain PAH compounds, and because of the skin hazards associated with PAH and phenolic compounds, it is important that appropriate protective clothing be worn during work activities, which may involve the possibility of skin contact with affected soil or groundwater. As a minimum, the presence of visible creosote or coal tar related material shall constitute evidence of affected soil or groundwater.

Health and Safety Training

Personnel covered by this Health and Safety Plan must have received appropriate health and safety training prior to their working on the site. Training will include:

- Requirements for and use of respirators and personal protective equipment.
- Required personal hygiene practices.
- Requirements for employees to work in pairs.
- Proper material handling.
- Proper sampling procedures.
- Maintenance of safety equipment.
- Effective response to any emergency.
- Emergency procedures.
- Hazard zones.
- Decontamination methods.
- General safety precautions.

A copy of the Standard Safety Procedures (Table 2) will be given to each worker covered by this Health and Safety Plan.

Decontamination

Administrative procedures require hygienic practices consistent with work hazards. Employees will be instructed in the training program on proper personal hygiene procedures.

Contaminated, reuseable PPE, such as boots, hard hats, face shields and goggles, will be decontaminated prior to leaving the site. The decontamination procedure follows:

- Rinse with water to remove gross contamination.
- Wash in Alconox or equivalent detergent solution.
- Rinse with clean water.

Contaminated, disposable PPE, such as Tyvek coveralls and gloves will be placed in 55-gallon drums and stored while arrangements are made for disposal.

TABLE 2

STANDARD SAFETY PROCEDURES

- Employees are required to work in pairs.
- Wash face and hands prior to eating, smoking, or leaving the site.
- No smoking or eating is allowed in the work area during excavation or sampling activities.
- Wearing of contact lenses is not permitted in the work area.
- Contaminated material (e.g., Tyvek coveralls) must be properly disposed of before leaving the site.
- All work must be conducted in accordance with local, state and federal EPA and OSHA regulations, particularly 29 CFR 1910.120.

Respirators, if used, will be cleaned and disinfected after each day of use. The facepiece (with cartridge removed) will be washed in a hypochlorite (or equivalent) disinfecting solution, rinsed in warm water and air dried in a clean place.

Emergency Procedures

This Health and Safety Plan has been established to allow site operations to be conducted without adverse impacts on worker health and safety as well as public health and safety. In addition, supplementary emergency response procedures have been developed to cover extraordinary conditions at the site.

General

All accidents and unusual events will be dealt with in a manner to minimize a continued health risk to site workers. In the event that an accident or other unusual event occurs, the following procedure will be followed:

- First aid or other appropriate initial action will be administered by those closest to the accident/event. This assistance will be conducted so that those rendering assistance are not placed in a situation of unacceptable risk. In the event that a worker is caught in a trench collapse, call for emergency assistance immediately.

- All accidents/unusual events must be immediately reported to the Owner.

- All workers on site should conduct themselves in a mature, calm manner in the event of an accident/unusual event, to avoid spreading the danger to themselves, surrounding workers and the community.

Responses to Specific Situations

Emergency procedures for specific situations are given in the following paragraphs.

<u>Worker Injury</u>

If an employee in an affected area is physically injured, Red Cross first-aid procedures will be followed. Depending on the severity of the injury, emergency medical response may be sought.

If the injury to the worker is chemical in nature (e.g., overexposure), the following first-aid procedures are to be instituted:

- Eye Exposure - If affected solids or liquids get into the eyes, wash eyes immediately using large amounts of water and lifting the lower and upper lid occasionally. Obtain medical attention immediately.

- Skin Exposure - If affected solids or liquids get on the skin, promplty wash the affected skin using soap or mild detergent and water. Obtain medical attention immediately when exposed to concentrated solids or liquids.

- Inhalation - If a person inhales large amounts of a toxic vapor, move the exposed person to fresh air at once. If breathing has stopped, perform artificial respiration. Keep the affected person warm and at rest. Obtain medical attention as soon as possible.

- Swallowing - When affected solids or liquids have been swallowed, the Poison Control Center will be contacted and their recommended procedures followed.

Emergency Notification

In an extraordinary event that might be damaging to personnel or adjacent property, immediate notification of the proper emergency service will be required. The proper emergency service is determined by the nature of the emergency.

EMERGENCY NOTIFICATION

Fire Department	911
Ambulance	911
Police Department	911
Methodist Hospital	932-5000
Poison Control Center	347-3141

OTHER CONTACTS

MPCA - Michael Vennewitz	612-296-7782
EPA - Erin Moran	312-886-7238
City of St. Louis Park - James Grube	612-924-2551
- William Gregg (ENSR)	612-924-0117

COMMUNITY RELATIONS PLAN

COMMUNITY RELATIONS PLAN

The Initial Sampling Plan is to be completed in accordance with the Consent Decree - Remedial Action Plan for Reilly Tar & Chemical Corporation's St. Louis Park, Minnesota, N.P.L. Site. All community relations programs related to this work will be coordinated through the following agencies:

United States	Ms. Judy Beck United States Environmental Protection Agency (312) 353-1325
State of Minnesota	Ms. Susan Brustman Minnesota Pollution Control Agency (612) 296-7769
City of St. Louis Park	Ms. Sharon Klumpp City of St. Louis Park (612) 924-2523

Information necessary to conduct the Community Relations Plan will be provided by the City and Reilly.