TXDOT RIGHT-OF-WAY FIELD SAMPLING PLAN

Prepared for

McGinnes Industrial Maintenance Corporation
International Paper Company

Prepared by

Anchor QEA, LLC
614 Magnolia Avenue
Ocean Springs, Mississippi 39564

July 2010

9184345

TABLE OF CONTENTS

1 INTRODUCTION 4

1.1 Objectives and Overview 5

1.2 Project Organization 6

1.2.1 Laboratories 8

2 SAMPLING PROCEDURES 10

2.1 Schedule 10

2.2 Field Survey and Sampling Methods 10

2.2.1 Sampling Equipment and Supplies 10

2.2.2 Sample Location Positioning 11

2.2.3 Soil Sample Collection 12

2.2.4 Equipment Decontamination 12

2.3 Field Quality Control Samples 13

2.4 Sample Packaging and Transport 14

2.5 Study-Derived Wastes 15

3 FIELD DOCUMENTATION 16

3.1 Field Log Book 16

3.2 Chain-of-Custody Procedures 18

3.3 Station Numbering 19

3.4 Sample Identifiers 19

4 FIELD DATA MANAGEMENT AND REPORTING PROCEDURES 21

5 REFERENCES 22

List of Tables

Table 1 Sample Collection Matrix

Table 2 Sample Containers, Preservation, and Holding Time Requirements

List of Figures

Figure 1 Overview of RI/FS Sediment Sampling Locations and Proposed TxDOT Right-of-Way and Soil Sample Locations
Figure 2 TxDOT Right-of-Way Soil Sample Locations
Figure 3 Remedial Investigation/Feasibility Study Human Health Intertidal Soil/Sediment Sampling Locations in and near the TxDOT Right-of-Way

List of Appendices

Appendix A Utility Easements

LIST OF ACRONYMS AND ABBREVIATIONS

Abbreviation	Definition
Anchor QEA	Anchor QEA, LLC
AOC	Administrative Order on Consent
COC	chain-of-custody
DGPS	differential global positioning system
dw	dry weight
FL	Field Lead
FSP	Field Sampling Plan
GPS	global positioning system
HASP	Health and Safety Plan
I-10	Interstate Highway 10
Integral	Integral Consulting Inc.
IPC	International Paper Company
kg	kilogram
MIMC	McGinnes Industrial Maintenance Corporation
ng	nanogram
PRG	preliminary remediation goal
QA	quality assurance
QA/QC	quality assurance and quality control
QC	quality control
RI/FS	Remedial Investigation and Feasibility Study
ROW	Right-Of-Way
Site	San Jacinto River Waste Pits Superfund Site
SOP	standard operating procedure
TCEQ	Texas Commission on Environment Quality
TCRA	time critical removal action
TEQ	toxicity equivalent
Tract	Virgil C. McGinnes, Trustee tract
TXDOT	Texas Department of Transportation
UAO	Unilateral Administrative Order
USEPA	U.S. Environmental Protection Agency

1 INTRODUCTION

This document presents the Field Sampling Plan (FSP) prepared on behalf of McGinnes Industrial Maintenance Corporation (MIMC) and International Paper Company (IPC) for a focused soil sampling effort on a right-of-way (ROW) owned by the Texas Department of Transportation (TxDOT) in Harris County, Texas (Figure 1). The ROW is adjacent to Interstate Highway 10 (I-10) and to the area referred to as the Virgil C. McGinnes, Trustee tract (Tract), which is part of the San Jacinto River Waste Pits Superfund Site (the Site). This FSP was prepared by Anchor QEA, LLC (Anchor QEA) on behalf of MIMC and IPC. Subject to obtaining access to the ROW from TxDOT, Anchor QEA is planning to implement the sampling event as soon as possible after approval of the work plan.

The Tract is located immediately north of the I-10 Bridge on the western bank of the San Jacinto River. The Tract was used for approximately an eight month period of time in 1965 and 1966 for the disposal of paper mill waste sludge. The waste was reportedly brought to the Tract by barges from which the waste was pumped into the surface impoundments on the Tract (TCEQ and USEPA 2006).

MIMC and IPC have entered into an Administrative Order on Consent (AOC) to perform an early response action, referred to as a TCRA, for source control and Site stabilization. USEPA has also issued a Unilateral Administrative Order (UAO) to MIMC and IPC that provides for the performance of a remedial investigation and feasibility study (RI/FS) of the Site. The soil sampling discussed in this FSP is to be performed in connection with obtaining access from TxDOT to a portion of the ROW in order to allow vehicular and personnel access to and egress from the Site during implementation of the TCRA and the RI/FS. The FSP provides for the collection of surface and subsurface soil samples in the TxDOT ROW on the north and south sides of the I-10 Bridge, within the preliminary RI/FS Site perimeter (Figures 1 and 2). As shown on Figure 1, these TxDOT ROW soil samples will be collected on a grid pattern that is consistent with the grid pattern that was developed to determine the potential nature and extent of contamination in the San Jacinto River, as part of the RI/FS and approved by USEPA (Anchor QEA, LLC and Integral Consulting Inc., 2010). Figure 2 shows the sample locations. The three subsurface soil sampling locations shown on Figures 1 and 2 (TxDOT004, TxDOT005, and TxDOT012) were chosen by TxDOT with a request for discrete surface samples (0-12 inches) and subsurface samples (48 – 60 inches). Additional

soil sampling and analyses are planned throughout the RI/FS project area as part of the RI/FS process, including 20 soil/sediment samples from intertidal areas that are adjacent to the TxDOT Right-of-Way, as shown in Figure 3. Some of the RI/FS sample stations are being relocated or abandoned during sampling efforts because of field obstacles, such as concrete aprons and rip rap to protect the shoreline and bridge, through an approval process with EPA. The final number of stations and locations may vary from those shown in Figure 3.

This FSP will be implemented in a manner consistent with the Sediment Quality Assurance Project Plan and RI/FS Work Plan prepared for the RI/FS (Integral Consulting Inc. and Anchor QEA, LLC, 2010). Specifically, the RI/FS Work Plan contains information regarding Site background, existing data and conditions, and quality assurance and quality control (QA/QC) procedures and processes that will be followed during sampling work. This FSP incorporates that information and those procedures by reference, and provides additional task-specific information as pertinent. These samples will be collected upon approval of this FSP.

1.1 Objectives and Overview

The primary purpose of this sampling effort is to document conditions in the ROW for purposes of an access agreement with TxDOT. The access agreement will permit MIMC and IPC to conduct RI/FS and TCRA activities. The data to be generated under this FSP will, among other things, will be used to determine the impact, if any, of the disposal activities associated with the Tract on TxDOT's ROW and associated utility easements shown in Appendix A.

The scope of the soil sampling to be performed as part of this FSP can be summarized as follows:

- Collection of soil samples from 12 locations within the TxDOT ROW and the RI/FS preliminary Site perimeter (Figures 1 and 2).
- Analysis of samples from each location from 0-12 inches below grade for dioxins and furans (as TEQs), and the other primary and secondary contaminants of concern (COC) identified for the Site in the RI/FS process. A full listing of those COC is

provided in Table 2. All analytical chemistry sampling results will be reported on a dry weight basis.

- Analysis of composite samples from 48 inches to 60 inches for dioxins and furans (as TEQs), and the other primary and secondary contaminants of concern (COC) identified for the Site in the RI/FS process, from three of the surface sample locations (TxDOT004, TxDOT005, and TxDOT012), selected by TxDOT (Figures 1 and 2).

This information will be analyzed in conjunction with the twenty (20) human health and ecological exposure sediment sample results that are planned as part of the RI/FS. The locations of these RI/FS samples are shown in Figure 3. As noted above, some of the RI/FS sample stations are being relocated or abandoned during sampling efforts because of field obstacles, such as concrete aprons and rip rap to protect the shoreline and bridge, through an approval process with EPA. The final number of stations and locations may vary from those shown in Figure 3.

This FSP describes the project organization and field methods that will be used to collect soil samples. Section 2 of this FSP describes the field procedures and sample packaging and shipping requirements that will be followed by the technical team during the field study. Section 3 summarizes field documentation and chain-of-custody (COC) procedures. Field data reporting and field custody procedures are discussed in Section 4.

1.2 Project Organization

MIMC and IPC have retained Anchor QEA to perform this FSP. Integral Consulting, Inc. will also be providing support for database administration and analytical laboratory coordination. The primary contacts for each organization, including USEPA oversight are provided in the following tables:

Title	Name	Contact Information
USEPA	Valmichael Leos	U.S. Environmental Protection Agency Region 6 1445 Ross Avenue Dallas, TX 75202-2773 (214) 665-2283 leos.valmichael@epa.gov

McGinnes Industrial Maintenance Corporation Project Manager	Andrew Shafer	McGinnes Industrial Maintenance Corp. 9590 Clay Road Houston, TX 77080 (713) 772-9100 Ext. 109 dshafer@wm.com
International Paper Company Project Manager	Philip Slowiak	International Paper Company 6400 Poplar Avenue Memphis, TN 38197-0001 (901) 419-3845 philip.slowiak@ipaper.com

The names and quality assurance (QA) responsibilities of key project personnel for Anchor QEA who will be involved in these sampling and analysis activities are provided below:

FSP Personnel Quality Assurance Responsibilities

Title	Responsibility	Name	Contact Information
Project Coordinator	Coordination of project information and related communications on behalf of IPC and MIMC	David Keith	Anchor QEA, LLC 614 Magnolia Avenue Ocean Springs, MS 39564 (228) 818-9626 dkeith@anchorqea.com
Anchor QEA Corporate Health and Safety Managers	Oversight of health and safety program for field tasks associated with RI/FS	David Templeton	Anchor QEA, LLC 1423 Third Avenue Suite 300 Seattle, WA 98101 (206) 287-9130 dtempleton@anchorqea.com
Field Lead Anchor QEA	Field data collection and implementation of the Health and Safety Plan in the field	Jason Kase	Anchor QEA, LLC 4208 Cherry Laurel Drive Pensacola, FL 32054 (850) 912-8400 jkase@anchorqea.com
Project Database Administrator Integral	Database development and data management	Dreas Nielson	Integral Consulting Inc. 411 First Avenue South Suite 550 Seattle, WA 98104 (206) 957-0351 dnielson@integral-corp.com
Project Laboratory QA Coordinator Integral	Completeness of QA documentation and procedures	Craig Hutchings	Integral Consulting Inc. 1205 West Bay Drive NW Olympia, WA 98502 (360) 705-3534 chutchings@integral-corp.com

1.2.1 Laboratories

The following responsibilities apply to the project manager and QA (quality assurance) manager at the analytical laboratories used for this task.

The laboratory project manager is responsible for the successful and timely completion of sample analyses, and for performing the following tasks:

- Ensure that samples are received and logged in correctly, that the correct methods and modifications are used, and that data are reported within specified turnaround times.
- Review analytical data to ensure that procedures were followed as required in the FSP, the cited methods, and laboratory standard operating procedures (SOPs).
- Keep the task QA coordinator apprised of the schedule and status of sample analyses and data package preparation.
- Notify the task QA coordinator if problems occur in sample receiving, analysis, or scheduling, or if control limits cannot be met.
- Take appropriate corrective action as necessary.
- Report data and supporting QA information as specified in this FSP.

The laboratory QA manager is responsible for overseeing the QA activities in the laboratory and ensuring the quality of the data for this project. Specific responsibilities include the following:

- Oversee and implement the laboratory's QA program.
- Maintain QA records for each laboratory production unit.
- Ensure that QA and quality control (QC) procedures are implemented as required for each method and provide oversight of QA/QC practices and procedures.
- Review and address or approve nonconformity and corrective action reports.

Coordinate response to any QC issues that affect this project with the Laboratory Project Manager.

2 SAMPLING PROCEDURES

The following sections describe the detailed procedures and methods that will be used during this sampling event, including sampling procedures, recordkeeping, sample handling, storage, and field QC procedures. All field activities will be conducted in accordance with the Health and Safety Plan San Jacinto River Waste Pits Superfund Site (HASP; Anchor QEA 2009). Station locations and sampling matrices are outlined in Table 1.

2.1 Schedule

This sampling event will occur as soon as this work plan is approved, TxDOT grants access to the ROW for purposes of performing the sampling, and weather and other uncontrollable forces, such as tides, winds, etc. allow for access. Laboratory analytical work will be expedited so that preliminary results are available within one week of sampling and final laboratory results will be available within two weeks. Data validation will occur approximately two to three weeks after the final laboratory report is provided.

2.2 Field Survey and Sampling Methods

Soil chemistry samples will be collected at station locations equally spaced along the TxDOT ROW (Figure 1). The following sections describe the sampling equipment, sampling methods, sample handling, and shipping.

2.2.1 Sampling Equipment and Supplies

Field equipment and supplies include sampling equipment (i.e., hand auger), utensils, decontamination supplies, sample containers, coolers, shipping containers, log books and forms, personal protection equipment, and personal gear. Protective wear (e.g., gloves) is required to minimize the possibility of cross-contamination between sampling locations. Additional information on protective wear for this project is provided in the HASP.

Sample jars, preservatives, coolers, and packaging material for the samples will be supplied by the analytical laboratory. Details on the numbers and type of sample containers are provided in Table 2 of this FSP. The Field Lead (FL) and field personnel in charge of sample handling in the field will use a sample matrix table (Table 1) as a QC check to ensure that all

samples have been collected at a given station. This table includes the total number and type of sample jars required for each analysis at each sampling station.

Commercially available, pre-cleaned jars will be used for the samples, and the testing laboratories will maintain a record of certification from the suppliers. The bottle shipment documentation will include batch numbers. With this documentation, jars can be traced to the supplier, and bottle-wash analysis results can be reviewed. The bottle-wash certificate documentation will be archived.

Sample containers will be clearly labeled at the time of sampling. Labels will include the task name, sample location and number, sampler's initials, analyses to be performed, and sample date and time. Sample numbering and identification procedures are described in detail in Sections 3.3 and 3.4.

2.2.2 Sample Location Positioning

Latitude and longitude coordinates will be obtained at the locations where samples are collected. A differential global positioning system (DGPS) will be used to document the sample collection locations. The standard projection method to be used during field activities is Horizontal Datum: NAD1983_StatePlane, Texas South Central, FIPS 4204, U.S. feet. The positioning objective is to accurately determine and record the positions of all sampling locations to within ±2 m. Proposed soil sampling location coordinates are provided in Table 1. If field conditions permit, actual sample locations should fall within a 5 foot radius of the planned positions. In all cases the actual sample location coordinates should be recorded at each station.

The DGPS unit consists of a global positioning system (GPS) receiver and a differential receiver located at a horizontal control point. At the control point, the GPS-derived position is compared with the known horizontal location, offsets or biases are calculated, and the correction factors are telemetered to the GPS receiver. Positioning accuracies on the order of ±1 to 3 m can be achieved by avoiding the few minutes per day when the satellites are not providing the appropriate quality of signal. The GPS unit provides the operator with a listing

of the time intervals during the day when accuracies are decreased. Avoidance of these time intervals permits the operator to maintain better positioning accuracy.

2.2.3 Soil Sample Collection

The equipment and procedures that will be used to collect surface soil samples are discussed in this section. The twelve locations that will be sampled (Stations TxDOT001 through 012) are shown on Figure 1 and are listed in Table 1.

Surficial and subsurface soil samples (0 to 12 inches - 0-30 cm) will be collected with a hand or bucket auger. A hydraulic push probe (e.g. Geoprobe) will be utilized to collect continuous soil cores for stations that require subsurface samples (48 – 60 inches). If there is a significant vegetative cover, the vegetative material will be removed prior to sampling. The thickness of the vegetative cover will be noted in the field log book. The Anchor QEA FL will ensure adequate penetration depth is attained. A stainless-steel ruler or tape measure will be used to determine that the sampling criterion for adequate penetration depth has been met and that the correct thickness and interval of soil has been removed. A decontaminated stainless-steel spoon will be used to collect the soil from the auger and/or geoprobe core. Soil will be placed into a decontaminated stainless-steel bowl and homogenized using a stainless-steel spoon or other stainless-steel mixing implement until the soil attains a visually uniform color and texture.

Soil subsamples will then be removed for dioxin/furan analyses by placement in labeled, laboratory-cleaned sample containers with Teflon-lined lids (Table 2). Each sample container will be clearly labeled with the task name, sample number, type of analysis to be performed, date and time, and initials of person(s) preparing the sample. Immediately after sample containers are filled, the samples will be stored on ice (4±2°C).

2.2.4 Equipment Decontamination

Before sampling begins at a location, the sampling equipment will be scrubbed with a standard detergent (e.g., Alconox® or Liquinox®), rinsed with distilled water and air-dried. Equipment used for compositing the soil samples (i.e., stainless-steel bowls and spoons) will follow the same basic decontamination sequence, except that the final rinse will be with

laboratory-grade deionized water. After cleaning, the decontaminated sample homogenizing equipment will be covered with aluminum foil to protect it from possible contamination.

All non-dedicated sampling equipment that comes into contact with the soil samples (e.g., hand auger, stainless-steel bowls, and utensils) will be decontaminated prior to use and between samples. Non-dedicated sampling equipment will be decontaminated according to the procedures outlined above. If samples are collected that include obvious oily contamination, the sampling equipment used to collect and process them will be decontaminated using a separate decontamination station dedicated to heavily impacted equipment. This equipment will be wiped with a solvent following the initial decontamination, and it will undergo a second decontamination sequence using the standard decontamination procedures used for the non-oil-impacted equipment.

2.3 Field Quality Control Samples

Field QC samples will be used to assess sample variability and evaluate potential sources of contamination. The types of QC samples that will be collected are described in this section. The estimated numbers of field QC samples to be collected is listed in the sample matrix table (Table 1). If QC problems are encountered, they will be brought to the attention of the Project Manager. Corrective actions, if appropriate, will be implemented to meet the task's data quality indicators.

Field QC samples will include field split samples, standard reference materials, equipment filter wipe blanks, and filter blanks. The following QC samples will be collected in the field and analyzed by the analytical laboratory:

- Field split samples will be collected and analyzed to assess the variability associated with sample processing and laboratory variability. Blind field split samples will be collected at a minimum frequency of 1 field split sample per 20 soil sampling stations. Samples will be assigned unique numbers and will not be identified as field splits to the laboratory. A field split sample will be collected at every twentieth station.
- Standard reference materials are samples of known concentration that have typically undergone multi-laboratory analyses using a standard method. Reference materials

provide a measure of analytical performance and/or analytical method bias. Standard reference materials for the dioxin/furan analyses will be provided by the laboratory.

- Equipment filter wipe blanks will be collected to help identify possible contamination from the sampling environment or from the sampling equipment (e.g., hand auger, spoons, and bowls). Equipment filter wipe blanks will be generated at approximately 5 percent of the sampling stations at a minimum. All equipment wipe samples will be clearly noted in the field log (e.g., sample identifier, equipment type, date and time of collection, analysis, and filter lot number).
- A minimum of one field equipment filter wipe blank will be collected for each kind of sampling equipment used for chemical analyses. A filter wipe blank will be collected at every twentieth station. One equipment wipe will be prepared for each analysis type. If multiple analyses are requested, separate sets of filter wipes will be collected for each analysis type and for each kind of sampling equipment used, as the equipment can be wiped down only once for each piece of filter paper. This ensures that the filter wipe result represents the most conservative estimate of cross contamination for each analysis type. (Note: Filter papers must be stored in their original box, wrapped carefully in three layers of aluminum foil, or contained in a glass jar. The filter paper box cannot be stored in plastic bags or containers.)
- Filter blanks are prepared in the field to evaluate potential background concentrations present in filter paper used for the equipment filter wipe blank. Filter blanks will be collected at a minimum frequency of one for each lot number of filter papers used for collecting the equipment wipe blanks.

2.4 Sample Packaging and Transport

As mentioned above, sample coolers and packing materials will be supplied by the analytical laboratories. Individual sample jars will be labeled and placed into plastic bags and sealed. Samples will then be packed in a cooler lined with a large plastic bag. Glass jars will be packed to prevent breakage and separated in the cooler by bubble wrap or other shock-absorbent material. Ice in sealed plastic bags will then be placed in the cooler to maintain a temperature of approximately 4°C (±2°C). When the cooler is full, the COC form will be placed into a zip-locked bag and taped to the inside lid of the cooler. A temperature blank will be added to each cooler. Each cooler will be sealed with two COC seals, one each on the

front and side of the cooler. Labels indicating "This End Up "with an arrow and "Fragile" will be attached to each cooler.

The shipping containers will be clearly labeled (i.e., name of task, time and date container was sealed, person sealing the cooler, and company name and address) for positive identification. These packaging and shipping procedures are in accordance with U.S. Department of Transportation regulations (49 CFR 173.6 and 49 CFR 173.24). Coolers containing samples for chemical analyses will be transported to the laboratory by courier or overnight shipping service.

After the chemistry samples have been received by the laboratory, they will be stored under refrigeration (4±2°C).

2.5 Study-Derived Wastes

Any liquid or dry waste (e.g., decontamination liquids, contaminated boots, bibs, Tyvek™ suits, soils, paper towels, gloves, etc.) generated during sampling will be containerized and disposed of by a subcontractor specialized in hazardous waste removal. The subcontractor will be required to have, at a minimum, a waste management service that provides the following:

- Proper waste identification including full analytical capability
- Pick up and disposal of a broad range of hazardous wastes
- Safe and proper transportation
- Environmentally sound treatment and disposal
- Regularly scheduled service visits with manifest and label preparation

3 FIELD DOCUMENTATION

The integrity of each sample from the time of collection to the point of data reporting must be maintained. Proper record-keeping and COC procedures will allow samples to be traced from collection to final disposition. Representative photographs will be taken of each type of sample material that is collected (e.g. sandy material, silty sand, soil, etc.).

3.1 Field Log Book

All field activities and observations will be noted in a log book. The field log book will be a bound document and may contain individual field and sample log forms (depending on the sampling activity). Information will include personnel, date, time, station designation, sampler, types of samples collected, and general observations. Any changes that occur during sampling (e.g., personnel, responsibilities, or deviations from the FSP) and the reasons for these changes will be documented. The log book will identify visitors (if any) to the ROW and the number of photographs taken at each sampling location. Each FL is responsible for ensuring that their respective field log book and all field data forms are correct. Requirements for log book entries will include the following:

- Log books will be bound, with consecutively numbered pages.
- Removal of any pages, even if illegible, will be prohibited.
- Entries will be made legibly with black (or dark) waterproof ink.
- Unbiased, accurate language will be used.
- Entries will be made while activities are in progress or as soon afterward as possible (the date and time that the notation is made should be recorded, as well as the time of the observation itself).
- Each consecutive day's first entry will be made on a new, blank page.
- The date and time, based on a 24-hour clock (e.g., 0900 a.m. for 9:00 a.m. and 2100 for 9:00 p.m.), will appear on each page.

In addition to the preceding requirements, the person recording the information must initial and date each page of the field log book. If more than one individual makes entries on the same page, each recorder must initial and date each entry. The bottom of the page must be signed and dated by the individual who makes the last entry.

Log book corrections will be made by drawing a single line through the original entry, allowing the original entry to be read. The corrected entry will be written alongside the original. Corrections will be initialed and dated and may require a footnote for explanation.

The type of information that may be included in the field log book and/or field data forms includes the following:

- Task name, task location, and task number
- Task start date and end date
- Weather conditions
- Name of person making entries and other field staff
- Visitors to the ROW, if any
- Station name and location
- Date and collection time of each sample
- The sample number for each sample to be submitted for laboratory analysis
- The sampling location name, date, gear, and sampling location coordinates derived from GPS
- Specific information on each type of sampling activity
- The sample number, date and time of collection, equipment type, and the lot number for the box of filter papers used for field QC samples
- Observations made during sample collection, including weather conditions, complications, and other details associated with the sampling effort
- Sample description (source and appearance, such as soil type, color, presence of anthropogenic material, and presence and type of biological structures, other debris, oil sheens, and odor)
- Soil penetration depth (nearest 0.5 cm) based on soil depth at the center of the excavation
- Any visible debris near any of the sampling locations
- Any surface vegetation that is removed from the sampling location prior to sampling
- The locations of any surface water runoff or seeps that are located near any of the sampling stations
- The number of photographs taken at the sampling location
- A record of health and safety meetings, updates, and related monitoring

- Any deviation from the FSP and reasons for deviation

In addition, a sampling location map will be updated during sampling and will be maintained throughout the sampling event. All log books must be completed at the time that any observations are made. Copies of all log books and forms will be retained by the technical team.

3.2 Chain-of-Custody Procedures

Samples are in custody if they are in the custodian's view, stored in a secure place with restricted access, or placed in a container secured with custody seals. A COC record will be signed by each person who has custody of the samples and will accompany the samples at all times. Copies of the COC will be included in laboratory and QA/QC reports.
At a minimum, the form will include the following information:

- Site name
- FL's name and team members responsible for collection of the listed samples
- Collection date and time for each sample
- Sample type (i.e., sample for immediate analysis or archive)
- Number of sample containers shipped
- Requested analyses
- Sample preservation information (if any)
- Name of the carrier relinquishing the samples to the transporter, noting date and time of transfer, and the designated sample custodian at the receiving facility

Anchor QEA's FL (or delegate) will be the designated field sample custodian for their respective sampling events and will be responsible for all sample tracking and COC procedures for the samples that their team collected in the field. The field sample custodian will be responsible for final sample inventory and will maintain sample custody documentation. The field sample custodian will complete COC forms prior to removing samples from the field. Upon transferring samples to the laboratory sample custodian (if a local laboratory is selected) or shipping courier (as appropriate), the field sample custodian will sign, date, and note the time of transfer on the COC forms. The original COC forms will

be transported with the samples to the laboratories. All samples will be shipped to the testing laboratories in either coolers or shipping containers sealed with custody seals. Each laboratory will designate a sample custodian who will be responsible for receiving samples and documenting their progress through the laboratory analytical process. The sample custodian for each laboratory will establish the integrity of the custody seals upon sample arrival at the laboratory. The laboratory sample custodian will also ensure that the COC and sample tracking forms are properly completed, signed, and initialed upon receipt of the samples.

When the laboratory receives the samples, the laboratory sample custodian will conduct an inventory by comparing sample labels to those on the COC document. The custodian will enter the sample number into a laboratory tracking system by task code and sample designation. The custodian will assign a unique laboratory number to each sample and will be responsible for distributing the samples to the appropriate analyst or for storing samples at the correct temperature in an appropriate secure area.

3.3 Station Numbering

All stations will be assigned a unique identification code based on a designation scheme designed to suit the needs of the field personnel, data management, and data users. Station numbers will include "TxDOT" to indicate that the samples were taken from the TxDOT ROW. The letters will be followed by a number to identify the station position. An example station number and depth interval would be TxDOT001.

Station numbers will not be recorded on sample labels or COC forms to prevent analytical laboratories from seeing the relationships between samples and stations.

3.4 Sample Identifiers

Each sample from a given station will also have a unique label identifier. Sample identifiers will be established before field sampling begins and assigned to each sample as it is collected. Sample identifiers consist of codes designed to fulfill the following purposes: 1) to identify related samples (i.e., field split samples) to ensure proper data analysis and interpretation; and 2) to track individual sample containers to ensure that the laboratory receives all of the

material associated with a single sample. To accomplish these purposes, each container is assigned a sample number and a tag number. These codes and their uses are described below:

- A sample identifier for each sample will be created as follows: the station number (e.g., TxDOT001), followed by a two-letter code for the kind of sample collected at a given location (SO = soil sample), and then followed by the depth interval (e.g. 0 – 12 (inches) or 48 – 60 (inches)).
- Following the sample identifier, an alphanumeric identifier will follow, indicating sample type. "N" will designate normal samples; "D" will designate a homogenized split sample (e.g. TxDOT001-SO_0-12N).

For equipment filter wipe blanks, sequential numbers starting at 900 will be assigned instead of station numbers. For example, the first filter wipe blank for a soil sample collected with a stainless steel spoon and stainless steel bowl will be labeled as SOFW-901A (SO = soil, FW = filter wipe, A = hand auger).

4 FIELD DATA MANAGEMENT AND REPORTING PROCEDURES

During field operations, effective data management is critical to providing consistent, accurate, and defensible data and data products. Daily field records (a combination of field log books, field forms, if any, and COC forms) will make up the main documentation for field activities. Upon completion of sampling, field notes, data sheets (if any), and COC forms will be scanned to create an electronic record. Field data will be manually entered into the project database. One hundred percent of the transferred data will be verified based on hard copy records. Electronic QA checks to identify anomalous values will also be conducted following entry.

A draft data summary report will be provided to TxDOT within one week of MIMC and IP receiving the results of the final data validation. Final laboratory reports and data validation reports will be provided to TxDOT as attachments to the data summary report.

5 REFERENCES

Anchor QEA, 2010. Remedial Investigation/Feasibility Study Work Plan San Jacinto River Waste Pits Superfund Site. Prepared for McGinnes Industrial Maintenance Corporation, International Paper Company, and U.S. Environmental Protection Agency, Region 6. Anchor QEA, Ocean Springs, MS. April 2010.

Anchor QEA, 2009. Health and Safety Plan San Jacinto River Waste Pits Superfund Site. Prepared for McGinnes Industrial Maintenance Corporation, International Paper Company, and U.S. Environmental Protection Agency, Region 6. Anchor QEA, Ocean Springs, MS.

Integral Consulting Inc. and Anchor QEA, LLC, 2010. Sediment Sampling and Analysis Plan. Prepared for McGinnes Industrial Maintenance Corporation, International Paper Company, and U.S. Environmental Protection Agency, Region 6. Integral Consulting, Seattle, WA, Anchor QEA, Ocean Springs, MS. April 2010.

TCEQ and USEPA, 2006. Screening Site Assessment Report San Jacinto River Waste Pits, Channelview, Harris County, Texas. TXN000606611. Texas Commission on Environmental Quality and U.S. Environmental Protection Agency.

USEPA, 2009. Guidance on Recommended Interim Preliminary Remediation Goals for Dioxin in Soil at Comprehensive Environmental Response, Compensation, and Liability Act (CERLA) and Resource Conservation and Recovery Act (RCRA) Sites. December 2009.

TABLES

Table 1
Sample Collection Matrix

Station	Sample ID	Sample Type	Number of Subsamples	Soil (1/Station) PCDD/F 8 oz WMG 4±2 °C	Coordinates[a]	
					X	Y
☐ TxDOT001	TxDOT001-SO-0-12-N	Soil Core	1		3215250.00	13857745.54
☐ TxDOT002	TxDOT002-SO-0-12-N	Soil Core	1		3215752.24	13857690.17
☐ TxDOT003	TxDOT003-SO-0-12-N	Soil Core	1		3216246.70	13857460.74
☐ TxDOT004	TxDOT004-SO-0-12-N	Soil Core	1		3216749.23	13857222.69
☐ TxDOT004	TxDOT004-SO-12-60-N	Soil Core	1		3216749.23	13857222.69
☐ TxDOT005	TxDOT005-SO-0-12-N	Soil Core	1		3217249.91	13856985.10
☐ TxDOT005	TxDOT005-SO-12-60-N	Soil Core	1		3217249.91	13856985.10
☐ TxDOT006	TxDOT006-SO-0-12-N	Soil Core	1		3217945.73	13856669.64
☐ TxDOT007	TxDOT007-SO-0-12-N	Soil Core	1		3215250.00	13857585.99
☐ TxDOT008	TxDOT008-SO-0-12-N	Soil Core	1		3215750.00	13857502.27
☐ TxDOT009	TxDOT009-SO-0-12-N	Soil Core	1		3216246.84	13857300.68
☐ TxDOT010	TxDOT010-SO-0-12-N	Soil Core	1		3216746.17	13857042.53
☐ TxDOT011	TxDOT011-SO-0-12-N	Soil Core	1		3217188.59	13856832.01
☐ TxDOT012	TxDOT012-SO-0-12-N	Soil Core	1		3217769.23	13856557.09
☐ TxDOT012	TxDOT012-SO-12-60-N	Soil Core	1		3217769.23	13856557.09
Field Quality Assurance / Quality Control Samples						
☐ TxDOT###	TxDOT###-SO-#-##-D	NA	1		TBD	TBD
☐ TxDOT901	SOFW-901A	NA	1		NA	NA
☐ Filter Blank	FB-902	NA	1		NA	NA
☐ SRM	SRM-903	NA	1		NA	NA

Notes

PCDD/F = polychlorinated dibenzo-*p* -dioxin and polychlorinated dibenzofuran

WMG = wide mouth glass

TBD = To be determined

NA = Not applicable

a - NAD 1983; State Plane Texas South Central FIPS 4204; US feet. Coordinates provided correspond to proposed station locations represented on Figure 2. Coordinates for actual station locations will be collected in the field.

Table 2
Sample Containers, Preservation, and Holding Time Requirements

Matrix	Container [a]		Laboratory	Parameter	Preservation	Holding Time	Sample Size [b]
	Type	Size					
Soil							
	WMG	8 oz.	TBD	Percent moisture	4±2°C	6 months	10 g
				Dioxins/furans	4±2°C/Deep frozen (-20°C) [c]/ -10°C [d]	1 year/1 year [e]	50 g
Equipment Filter Wipe Blanks							
	WMG	4 oz.	TBD	Dioxins/furans	4±2°C	1 year/1 year [e]	1 wipe

Notes

TBD = to be determined
WMG = wide mouth glass
a - The size and number of containers may be modified by the analytical laboratory.
b - Sample sizes may be modified by the analytical laboratory.
c - Samples will be shipped to the laboratory on ice at 4±2°C. Once received at the laboratory, samples will be stored at -20°C.
d - Extracts will be stored at -10°C.
e - Holding time for samples prior to extraction/ holding time for extracts.

FIGURES

P:\Projects\C643_SJWaste_IPC\Production_MXDs\Soil_SAP_TCRA Access Road\Final\Figure_1.mxd - 5/13/2010 @ 3:54:04 PM

ANCHOR QEA

integral consulting inc.

0 800

Scale in Feet

FEATURE SOURCES:
Parcel Boundaries: Harris County Appraisal District

Proposed Soil Sample
Preliminary Site Perimeter
Field Triplicate
Parcel Boundary

Proposed Locations

Surface Sediment (Primary and Secondary COPCs)
Surface Sediment (Primary COPCs)
Surface Sediment (Primary and Secondary COPCs) and Core (Primary COPCs)
Additional Geotechnical Samples From Core
Geoprobe Core Locations

Figure 1
Overview of RI/FS Sediment Sampling Locations and Proposed TxDOT Right-of-Way and Soil Sample Locations
TxDOT Right-of-Way Field Sampling Plan
SJRWP Superfund/MIMC and IPC

P:\Projects\C643_SJWaste_IPC\Production_MXDs\Soil_SAP_TCRA Access Road\Final\Figure_2_TCRA_TexasDOT.mxd - 7/16/2010 @ 8:37:53 AM

ANCHOR QEA integral consulting inc.

Proposed Soil Sample

Parcel Boundary

0 200 Feet

FEATURE SOURCES:
Aerial Imagery: 0.5-meter. Photo Date: 01/14/2009
Texas Strategic Mapping Program (StratMap), TNRIS
Parcel Boundaries: Harris County Appraisal District

Figure 2
TxDOT Right-of-Way Soil Sample Locations
TxDOT Right-of-Way Field Sampling Plan
SJRWP Superfund/MIMC and IPC

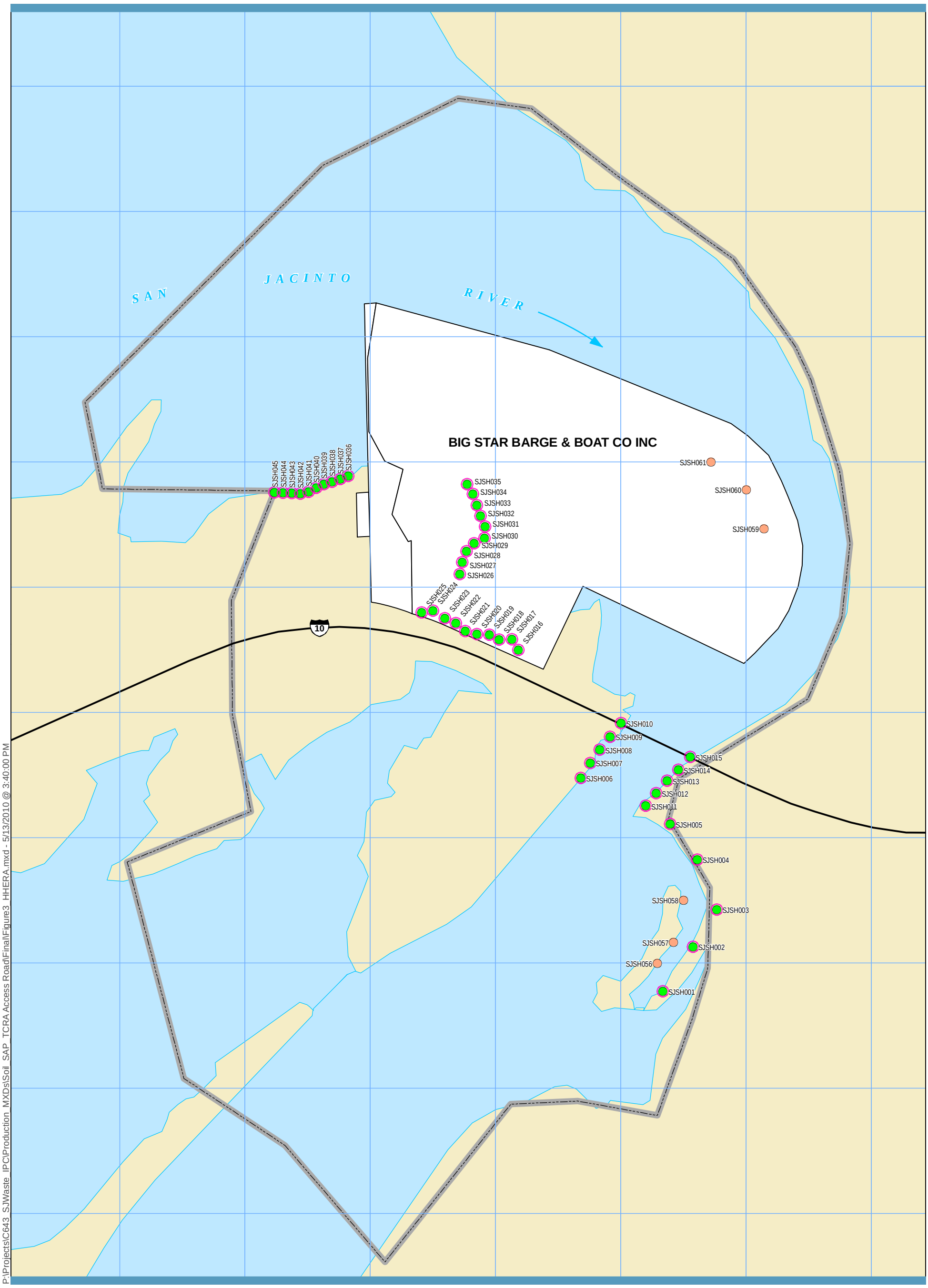

P:\Projects\C643_SJWaste_IPC\Production_MXDs\Soil_SAP_TCRA Access Road\Final\Figure3_HHERA.mxd - 5/13/2010 @ 3:40:00 PM

ANCHOR QEA

integral consulting inc.

0 800

Scale in Feet

Preliminary Site Perimeter

Harris

Parcel Boundary

Proposed Locations

Human Health Surface Sediment (Primary COPCs)

Human Health Surface Sediment and Subsurface Sediment (Primary COPCs)

ERA Surface Sediment (Primary COPCs)

FEATURE SOURCES:
Parcel Boundaries: Harris County Appraisal District

Figure 3

Remedial Investigation/Feasibility Study Human Health Intertidal Soil/Sediment Sampling Locations in and near the TxDOT Right-of-Way

TxDOT Right-of-Way Field Sampling Plan

SJRWP Superfund/MIMC and IPC

APPENDIX A
UTILITY EASEMENTS

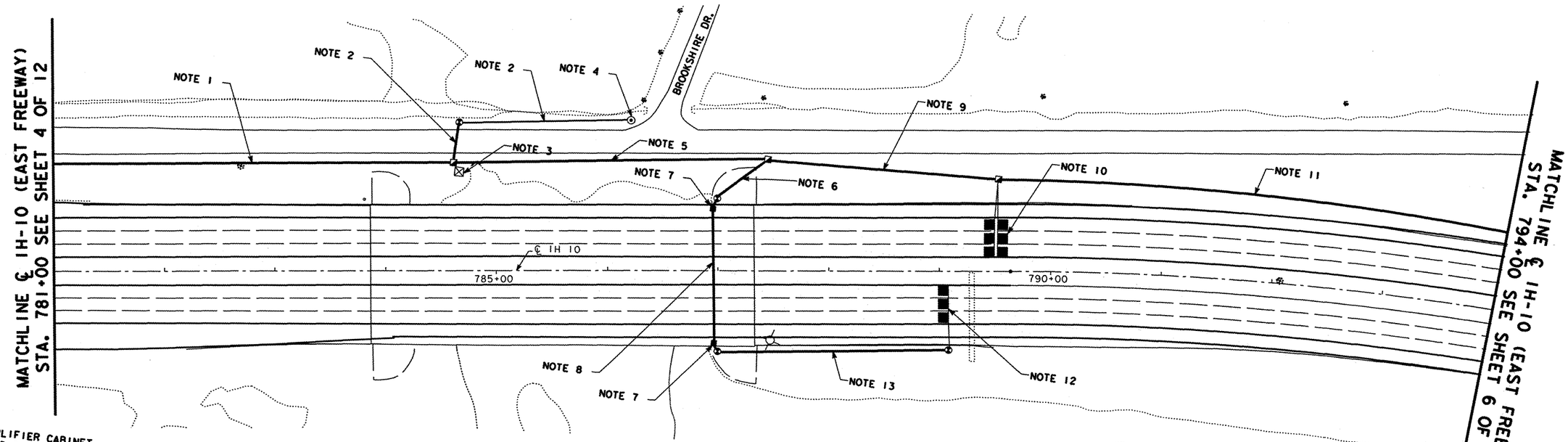

2. EXISTING
1-2" CONDUIT
2#6XHHW, 1#6 BARE (CABINET POWER)

3. EXISTING
DETECTOR AMPLIFIER CABINET
DETECTOR CARD RACK W/5 CARDS
DETECTOR CARD RACK POWER SUPPLY
3-3" CONDUITS TO GRD. BOX
1-2" CONDUIT TO GRD. BOX
IN COND. #1(3") - 1-12 PAIR #22 COMM. CABLE (FTM LOOPS)
9 LOOP LEAD-IN CABLES ⓘ
IN COND. #2(2") - 2#6XHHW, 1#6 BARE (CABINET POWER)

4. EXISTING
SERVICE POLE (TYPE B)
17733 MORELAND

5. EXISTING
4-3" CONDUITS
IN COND. #1 - 1 SINGLE MODE FIBER OPTIC CABLE
1 MULTIMODE FIBER OPTIC CABLE
1-6 PAIR #22 COMM. CABLE (VOICE COMM.)
IN COND. #2 - 9 LOOP LEAD-IN CABLES ⓘ

6. EXISTING
1-2" CONDUIT
3 LOOP LEAD-IN CABLES ⓘ

7. EXISTING
JUNCTION BOX
2-2" RMC TO GRD. BOX
IN COND. #1 - 3 LOOP LEAD-IN CABLES ⓘ

8. EXISTING
2-2" RMC (STRAPED TO ABUTMENT)
IN COND. #1 - 3 LOOP LEAD-IN CABLES ⓘ

9. EXISTING
4-3" CONDUITS
IN COND. #1 - 1 SINGLE MODE FIBER OPTIC CABLE
1 MULTIMODE FIBER OPTIC CABLE
1-6 PAIR #22 COMM. CABLE (VOICE COMM.)
IN COND. #2 - 6 LOOP LEAD-IN CABLES ⓘ

10. EXISTING
6 TYPE 1 LOOPS ⓘ

11. EXISTING
4-3" CONDUITS
IN COND. #1 - 1 SINGLE MODE FIBER OPTIC CABLE
1 MULTIMODE FIBER OPTIC CABLE
1-6 PAIR #22 COMM. CABLE (VOICE COMM.)

12. EXISTING
3 TYPE 1 LOOPS ⓘ

13. EXISTING
1-2" CONDUIT
3 LOOP LEAD-IN CABLES ⓘ

NOTE:
ⓘ TO BE ABANDONED

LEGEND
NEW CONDUIT
EXISTING CONDUIT
NEW GROUND BOX: TYPE 1
EXISTING GROUND BOX: TYPE 1
NEW GROUND BOX: TYPE 2
EXISTING GROUND BOX: TYPE 2
JUNCTION BOX
EXISTING COMMUNICATION HUB BUILDING
EXISTING CCTV CAMERA
EXISTING SEVICE POLE
EXISTING TYPE 1 LOOPS
EXISTING CABINET
RADAR VEHICLE SENSING DEVICE
RADAR VEHICLE SENSING DEVICE POLE

STATE OF TEXAS
DAVID MUÑOZ
69516
REGISTERED PROFESSIONAL ENGINEER

The seal appearing on this document was authorized by David Muñoz P.E. 69516, on 8-3, 2007

David Muñoz P.E.

SCALE: 1" = 100'

FILE NAME: IH-10-292-05 DGN

NAME:ENTER DATA

TEXAS DEPARTMENT OF TRANSPORTATION
IH 10 (EAST FREEWAY)

© 2007 TXDOT

COMPUTERIZED TRANSPORTATION MANAGEMENT SYSTEM LAYOUT

DN: RFB	DRAWING	DATE	FED. RD.		SHEET
CK. DN: KPB	ORIGINAL				

1. EXISTING
4-3" CONDUITS
IN COND. #1 - 1 SINGLE MODE FIBER OPTIC CABLE
1 MULTIMODE FIBER OPTIC CABLE
1-6 PAIR #22 COMM. CABLE (VOICE COMM.)

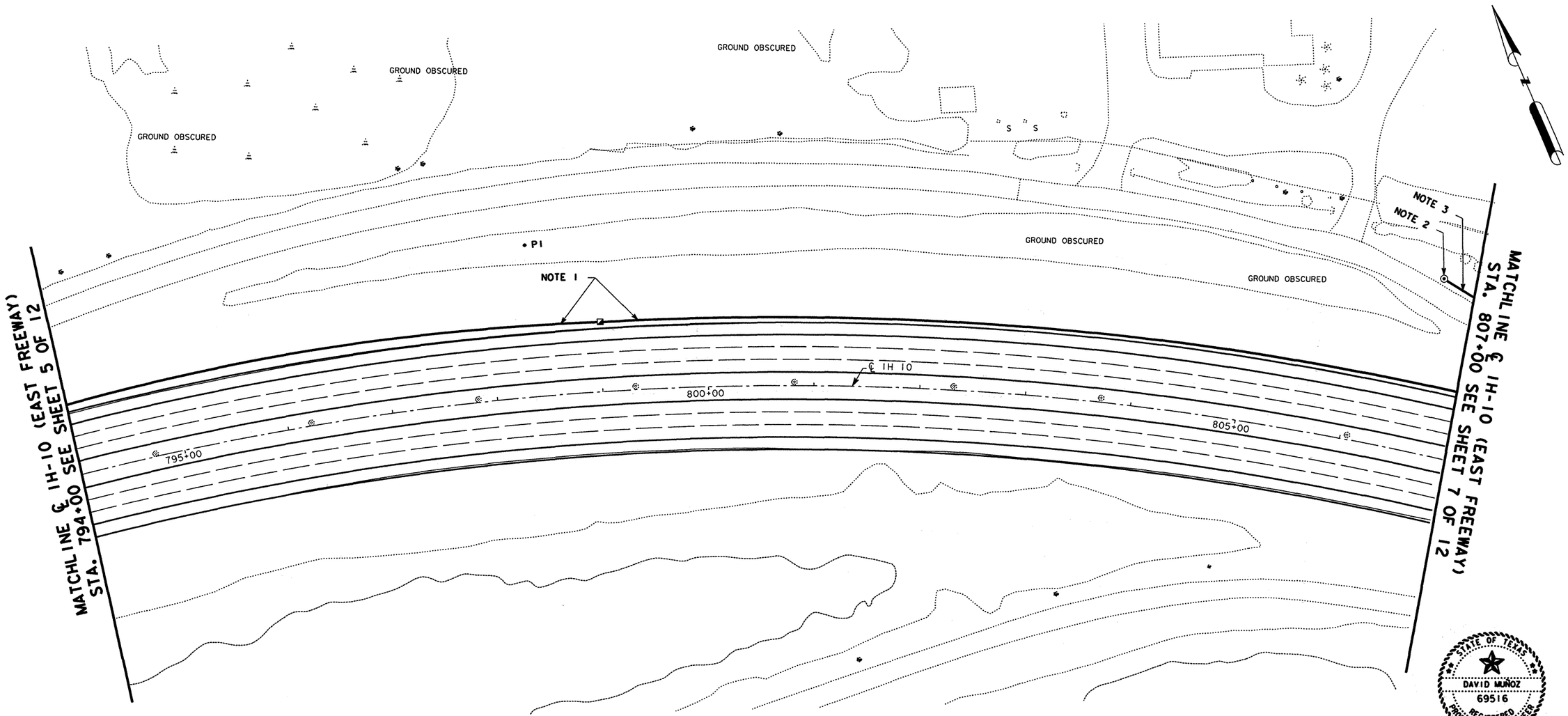

2. EXISTING
SERVICE POLE

3. EXISTING
1-2" CONDUIT
2#6#XHHW, 1#6 BARE (CCTV POWER)

STATE OF TEXAS
DAVID MUÑOZ
69516
REGISTERED PROFESSIONAL ENGINEER

The seal appearing on this document was authorized by David Muñoz P.E. 69516, on 8-3, 2007

David Muñoz P.E.

NO CTMS WORK ON THIS SHEET
FOR INFORMATION ONLY

SEE SHEET 5 OF 12
FOR LEGEND

SCALE: 1" = 100'

FILE NAME: IH-10-292-06.DGN

TEXAS DEPARTMENT OF TRANSPORTATION
IH 10 (EAST FREEWAY)

© 2007 TXDOT

COMPUTERIZED TRANSPORTATION MANAGEMENT SYSTEM LAYOUT

SHEET 6 OF 12

DN: RFB	DRAWING	DATE	FED. RD. DIV. NO.	STATE	PROJECT NO.				HIGHWAY NO.
CK DN: KPB	ORIGINAL	MAY 07	6	TEXAS					IH 10
DW: CCF			STATE DIST. NO.	COUNTY		CONTROL NO.	SECTION NO.	JOB NO.	SHEET NO.
CK DW: SC			HOUSTON	HARRIS		0508	01	292	427
TR:									
CK TR:									

NAME:ENTER DATA

1. EXISTING
   1-2" CONDUIT
   2#6XHHW, 1#6 BARE (CCTV POWER)

2. EXISTING
   CCTV CAMERA
   CAMERA SUPPORT POLE & FOUNDATION
   CCTV CABINET
   CCTV FIELD EQUIPMENT
   1 STAND ALONE LDM
   VIDEO FIBER OPTIC TX (M/M)
   3-2" CONDUITS TO GRD. BOX
   IN COND. #1 - 1-6 PAIR #22 COMM. CABLE (CCTV)
   IN COND. #2 - 2#6XHHW, 1#6 BARE (CCTV POWER)
   IN COND. #3 - FIBER DROP CABLE

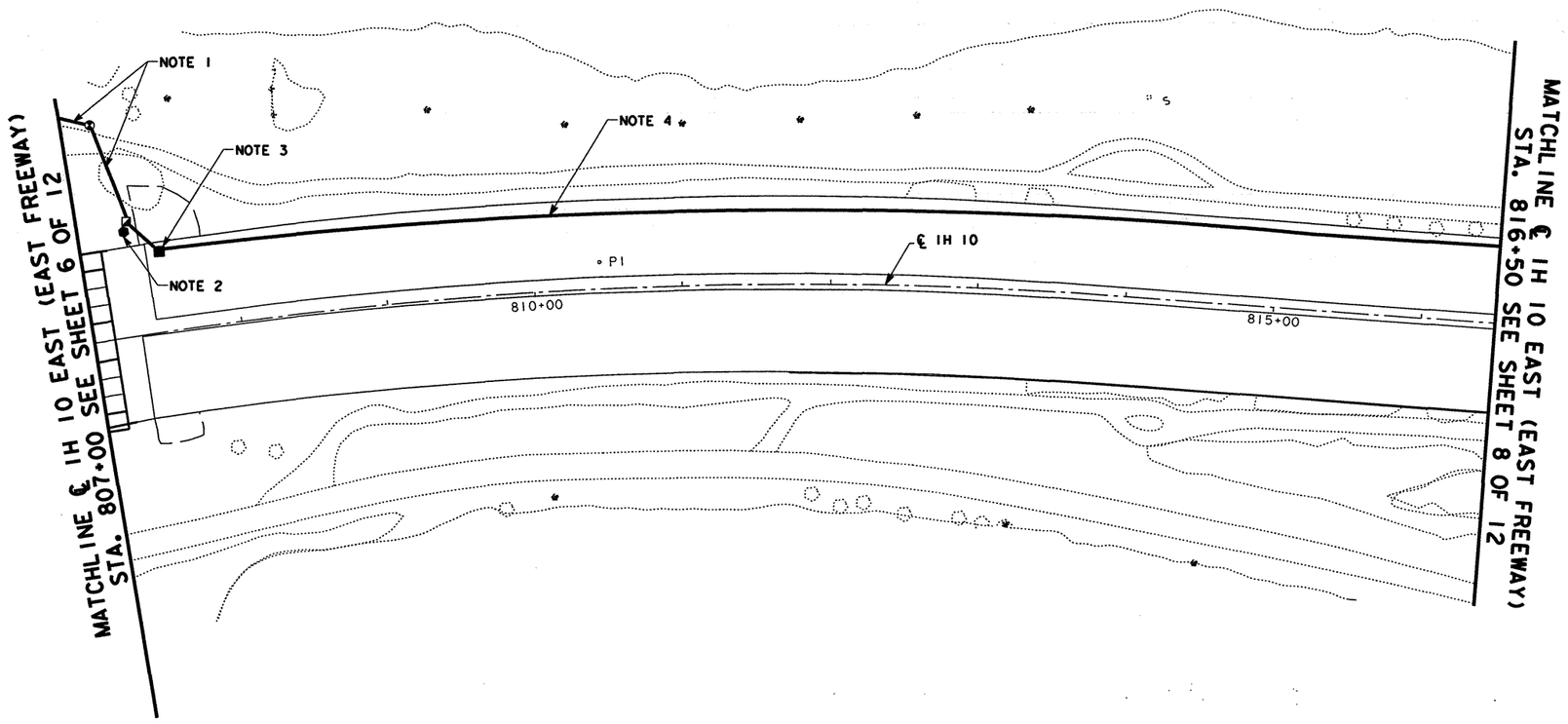

3. EXISTING
   JUNCTION BOX
   4-3" RMC TO GRD. BOX
   IN COND. #1 - 1 SINGLE MODE FIBER OPTIC CABLE
   1 MULTIMODE FIBER OPTIC CABLE
   FIBER DROP CABLE
   1-6 PAIR #22 COMM. CABLE (VOICE COMM.)
   IN COND. #2 - 1-6 PAIR #22 COMM. CABLE (CCTV)

4. EXISTING
   4-3" RMC (SUSPENDED BENEATH BRIDGE)
   IN COND. #1 - 1 SINGLE MODE FIBER OPTIC CABLE
   1 MULTIMODE FIBER OPTIC CABLE
   FIBER DROP CABLE
   1-6 PAIR #22 COMM. CABLE (VOICE COMM.)
   IN COND. #2 - 1-6 PAIR #22 COMM. CABLE (CCTV)

NO CTMS WORK ON THIS SHEET
FOR INFORMATION ONLY

SEE SHEET 5 OF 12
FOR LEGEND

SCALE: 1" = 100'

FILE NAME: IH-10-292-07.DGN

STATE OF TEXAS
DAVID MUÑOZ
69516
REGISTERED PROFESSIONAL ENGINEER

The seal appearing on this document was authorized by David Muñoz P.E. 69516, on 8-3, 2007

David Muñoz, P.E.

TEXAS DEPARTMENT OF TRANSPORTATION
IH 10 (EAST FREEWAY)

© 2007 TXDOT

COMPUTERIZED TRANSPORTATION MANAGEMENT SYSTEM LAYOUT

SHEET 7 OF 12

DN: RFB	DRAWING	DATE	FED. RD. DIV. RD.	STATE	PROJECT NO.				HIGHWAY NO.
CK DN: KPB	ORIGINAL	MAY 07	6	TEXAS					IH 10
DN: CCF			STATE DIST. NO.	COUNTY		CONTROL NO.	SECTION NO.	JOB NO.	SHEET NO.
CK DN: SC			HOUSTON	HARRIS		0508	01	292	488
TR:									
CK TR:									

NAME:ENTER DATA

1. EXISTING
   4-3" RMC (SUSPENDED BENEATH BRIDGE)
   IN COND. #1 - 1 SINGLE MODE FIBER OPTIC CABLE
                 1 MULTIMODE FIBER OPTIC CABLE
                 FIBER DROP CABLE
                 1-6 PAIR #22 COMM. CABLE (VOICE COMM.)
   IN COND. #2 - 1-6 PAIR #22 COMM. CABLE (CCTV)

2. EXISTING
   JUNCTION BOX

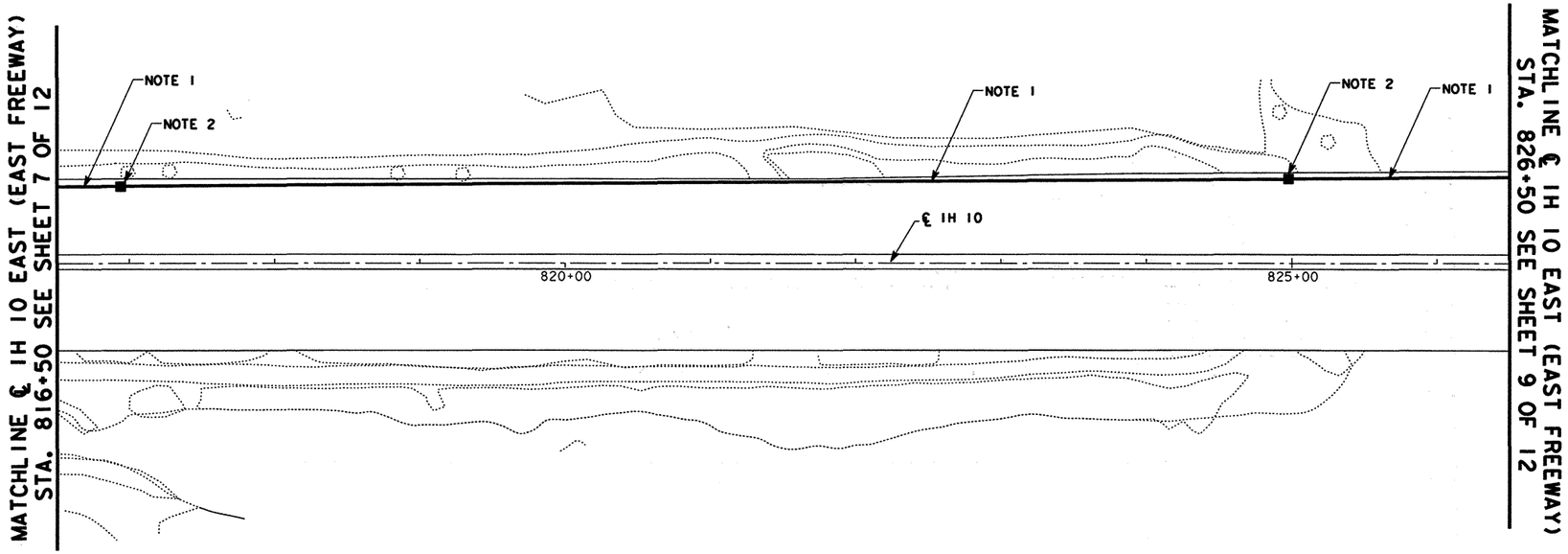

NO CTMS WORK ON THIS SHEET
FOR INFORMATION ONLY

SEE SHEET 5 OF 12
FOR LEGEND

SCALE: 1" = 100'

FILE NAME: IH-10-292-08.DGN

STATE OF TEXAS
DAVID MUÑOZ
69516
REGISTERED PROFESSIONAL ENGINEER

The seal appearing on this document was authorized by David Muñoz P.E. 69516, on 8-3, 2007

David Muñoz, P.E.

TEXAS DEPARTMENT OF TRANSPORTATION
IH 10 (EAST FREEWAY)

© 2007 TXDOT

COMPUTERIZED TRANSPORTATION MANAGEMENT SYSTEM LAYOUT

SHEET 8 OF 12

DN: RFB	DRAWING	DATE	FED. RD. DIV. RD.	STATE	PROJECT NO.				HIGHWAY NO.
CK DN: KPB	ORIGINAL	MAY 07	6	TEXAS					IH 10
DW: CCF			STATE DIST. NO.	COUNTY		CONTROL NO.	SECTION NO.	JOB NO.	SHEET NO.
CK DW: SC			HOUSTON	HARRIS		0508	01	292	489
TR:									
CK TR:									

NAME:ENTER DATA

1. EXISTING
4-3" RMC (SUSPENDED BENEATH BRIDGE)
IN COND. #1 - 1 SINGLE MODE FIBER OPTIC CABLE
1 MULTIMODE FIBER OPTIC CABLE
FIBER DROP CABLE
1-6 PAIR #22 COMM. CABLE (VOICE COMM.)
IN COND. #2 - 1-6 PAIR #22 COMM. CABLE (CCTV)

2. EXISTING
JUNCTION BOX
4-3" RMC (SUSPENDED BENEATH BRIDGE)
IN COND. #1 - 1 SINGLE MODE FIBER OPTIC CABLE
1 MULTIMODE FIBER OPTIC CABLE
FIBER DROP CABLE
1-6 PAIR #22 COMM. CABLE (VOICE COMM.)
IN COND. #2 - 1-6 PAIR #22 COMM. CABLE (CCTV)

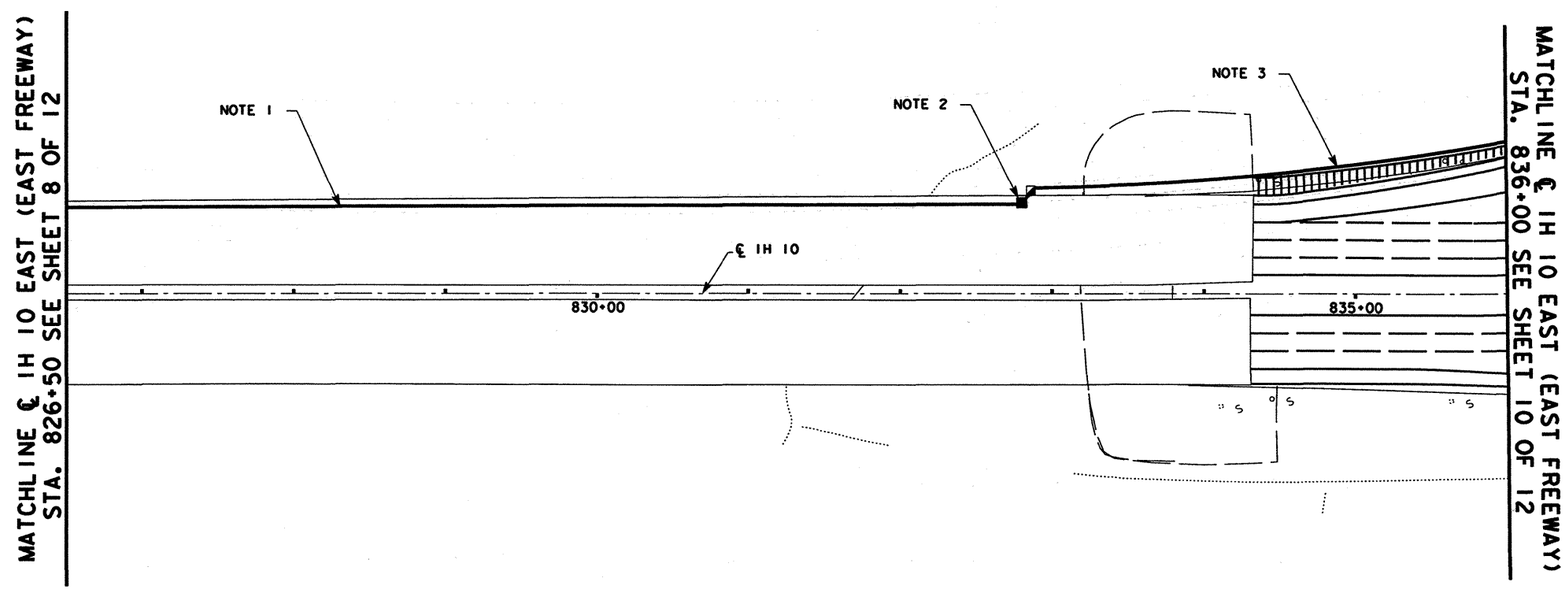

3. EXISTING
4-3" CONDUITS
IN COND. #1 - 1 SINGLE MODE FIBER OPTIC CABLE
1 MULTIMODE FIBER OPTIC CABLE
FIBER DROP CABLE
1-6 PAIR #22 COMM. CABLE (VOICE COMM.)
IN COND. #2 - 1-6 PAIR #22 COMM. CABLE (CCTV)

NO CTMS WORK ON THIS SHEET
FOR INFORMATION ONLY

SEE SHEET 5 OF 12
FOR LEGEND

SCALE: 1" = 100'

FILE NAME: IH-10-292-09.DGN

STATE OF TEXAS
DAVID MUÑOZ
69516
REGISTERED PROFESSIONAL ENGINEER

The seal appearing on this document was authorized by David Muñoz P.E. 69516, on 8-3, 2007

David Muñoz, P.E.

TEXAS DEPARTMENT OF TRANSPORTATION
IH 10 (EAST FREEWAY)

© 2007 TXDOT

COMPUTERIZED TRANSPORTATION MANAGEMENT SYSTEM LAYOUT

SHEET 9 OF 12

DN: RFB	DRAWING	DATE	FED. RD. DIV. RD.	STATE	PROJECT NO.					HIGHWAY NO.
CK DN: KPB	ORIGINAL	MAY 07	6	TEXAS						IH 10
DW: CCF			STATE DIST. NO.	COUNTY		CONTROL NO.	SECTION NO.	JOB NO.	SHEET NO.	
CK DW: SC			HOUSTON	HARRIS		0508	01	292	490	
TR:										
CK TR:										

NAME:ENTER DATA

CenterPoint Energy (Gas)
08-0153

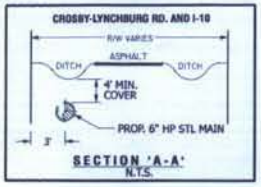

SECTION 'A-A'
N.T.S.

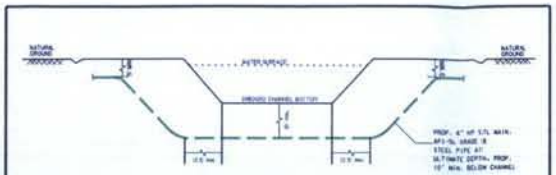

SAN JACINTO RIVER CROSSING PROFILE 'B-B'
N.T.S.

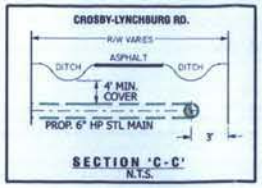

SECTION 'C-C'
N.T.S.

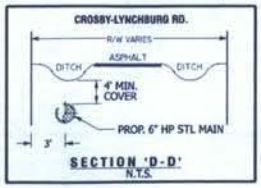

SECTION 'D-D'
N.T.S.

STATE OF TEXAS
JOSEPH PAUL MAAS
69683
REGISTERED PROFESSIONAL ENGINEER

11-26-07

LOCATION MAP

PROJECT LOCATION

GENERAL NOTES

1. FIELD LOCATE & VERIFY ALL EXISTING FEEDS, MAINS, AND SERVICES.
2. MAINTAIN A MINIMUM DEPTH OF 4' UNLESS OTHERWISE SPECIFIED.
3. PRESSURE TEST AT 375 PSIG FOR 24 HOURS WITH A TEST CHART.
4. CONTACT ENGINEER MATTHEW SMITH FOR ANY FIELD CHANGES.
   PHONE: 713-207-4976

LEGEND AND NOTES

EXIST. 4" HP MAIN		PROP. 334 PAG MAG. ANODE	
EXIST. 2" IP MAIN		PROP. LINE MARKER	
PROP. 6" HP STL. GRADE B, API 5L X42 O.D. 0.280" W.T. SMLS. ASTM A106 W.O. # 4000080		PROP. LOC. TEST STA.	

P:32460733 | O:32400728 | EM:499-C | LAMBERT:6159C | Z:056 | G:048 | TIC:004 | SOG:71000

DESIGNED BY: MATTHEW SMITH	713-207-4976	RECOMMENDED BY:	DATE:	DRAWN BY: ANDRE KIDDE
ESTIMATED COST:	CONTRIBUTION			DATE: 11/06/07
DATE NEEDED:				SCALE: 1"=200'
PURPOSE AND NECESSITY: THE PROPOSED MAIN WILL SERVE AS A HIGH PRESSURE FEED TO INDUSTRIAL CUSTOMERS ALONG LYNCHBURG RD.		APPROVED BY:	DATE:	SHEET: 1 OF 3

LYNCHBURG RD.

CenterPoint Energy
Houston Electric, LLC

WO No: ED4-071465

CenterPoint Energy (Gas)
08-0153

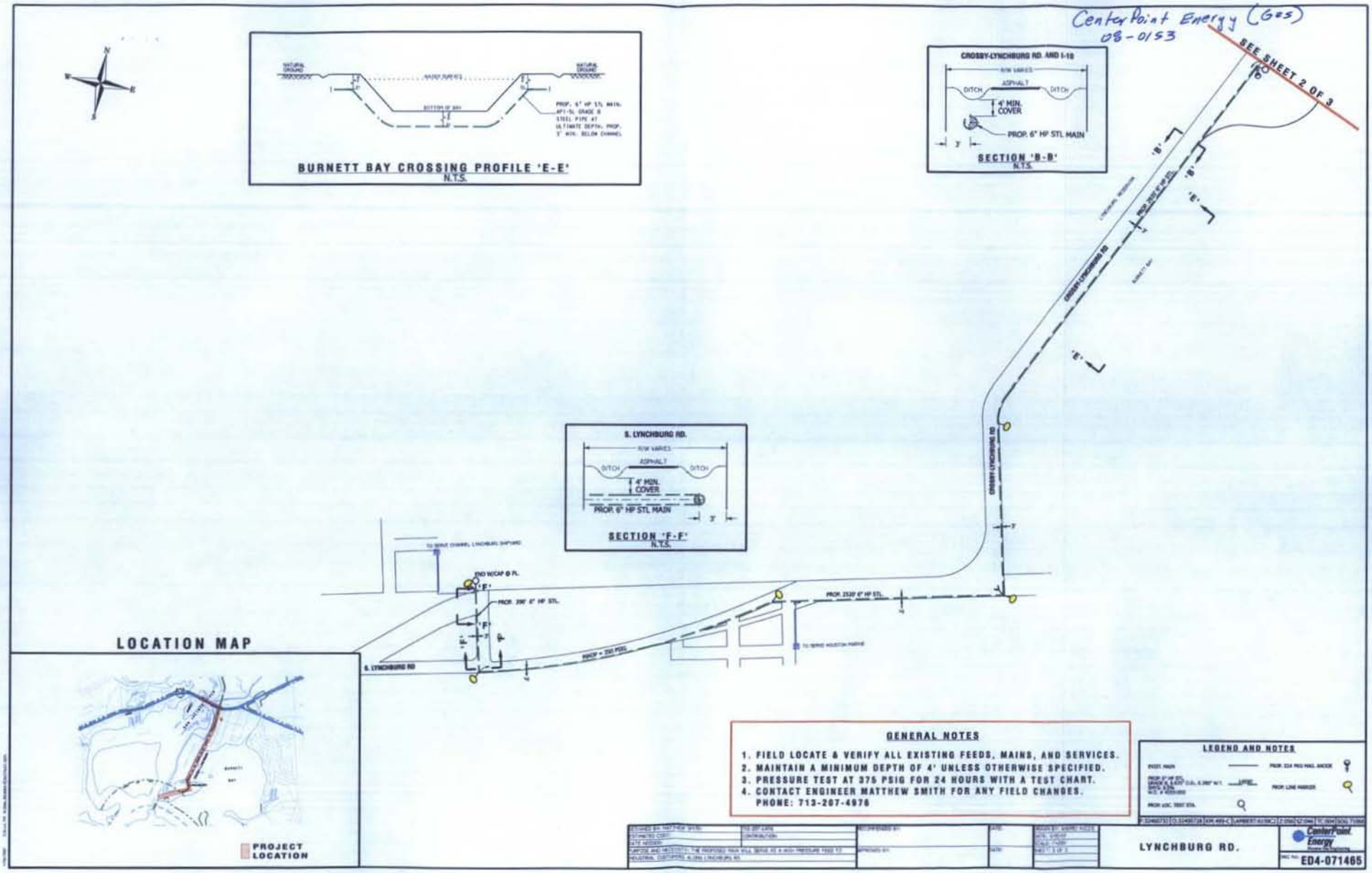

CenterPoint Energy (Gas)
08-0153

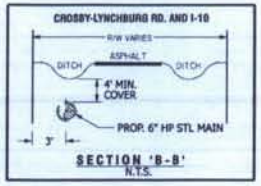

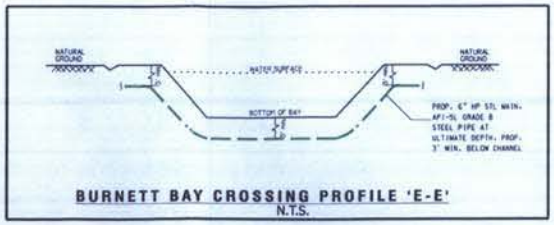

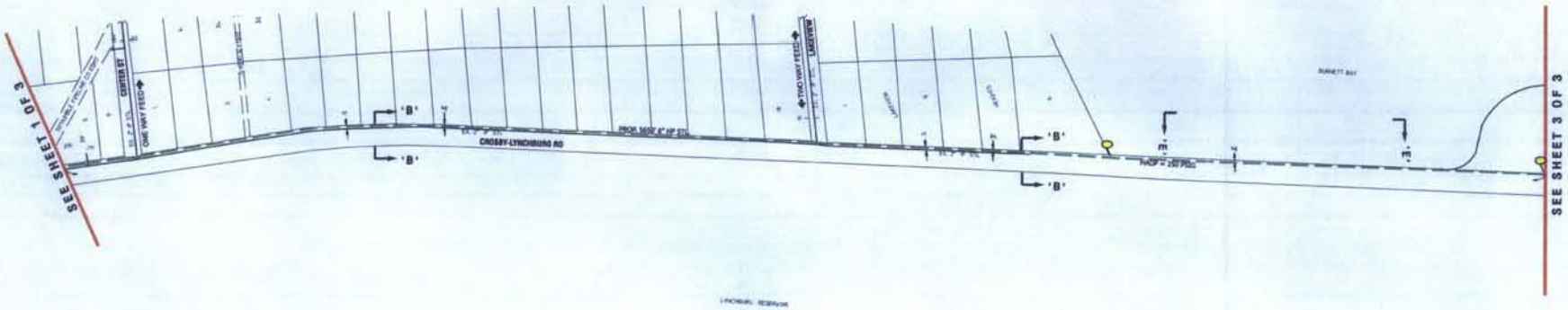

LOCATION MAP

PROJECT LOCATION

GENERAL NOTES

1. FIELD LOCATE & VERIFY ALL EXISTING FEEDS, MAINS, AND SERVICES.
2. MAINTAIN A MINIMUM DEPTH OF 4' UNLESS OTHERWISE SPECIFIED.
3. PRESSURE TEST AT 375 PSIG FOR 24 HOURS WITH A TEST CHART.
4. CONTACT ENGINEER MATTHEW SMITH FOR ANY FIELD CHANGES.
   PHONE: 713-207-4978

LEGEND AND NOTES

EXIST. 4" HP MAIN		PROP. 33# MIG MAG. ANODE	
EXIST. 2" SP MAIN		PROP. LINE MARKER	
PROP. 6" HP STL GRADE B, 0.237 O.D., 0.280" WT. SMYS: 42 ksi, API 5L X42		PROP. LOC. TEST STA.	

P:324607.23	Q:3240673.8	KM-459-C	LAMBERT:6159C1	Z:058	SZ:046	TC:004	SOG:71000

DESIGNED BY: MATTHEW SMITH	713-207-4978	DESIGNED BY:	DATE:	DRAWN BY: ANDRE TIZZE	LYNCHBURG RD.	CenterPoint Energy
ESTIMATED COST:	CONTRIBUTION			DATE: 5-18-07		
DATE NEEDED:				SCALE: 1"=100'		
PURPOSE AND NECESSITY: THE PROPOSED MAIN WILL SERVE AS A HIGH PRESSURE FEED TO INDUSTRIAL CUSTOMERS ALONG LYNCHBURG RD.		APPROVED BY:	DATE:	SHEET: 2 OF 3		DWG. No. ED4-071465

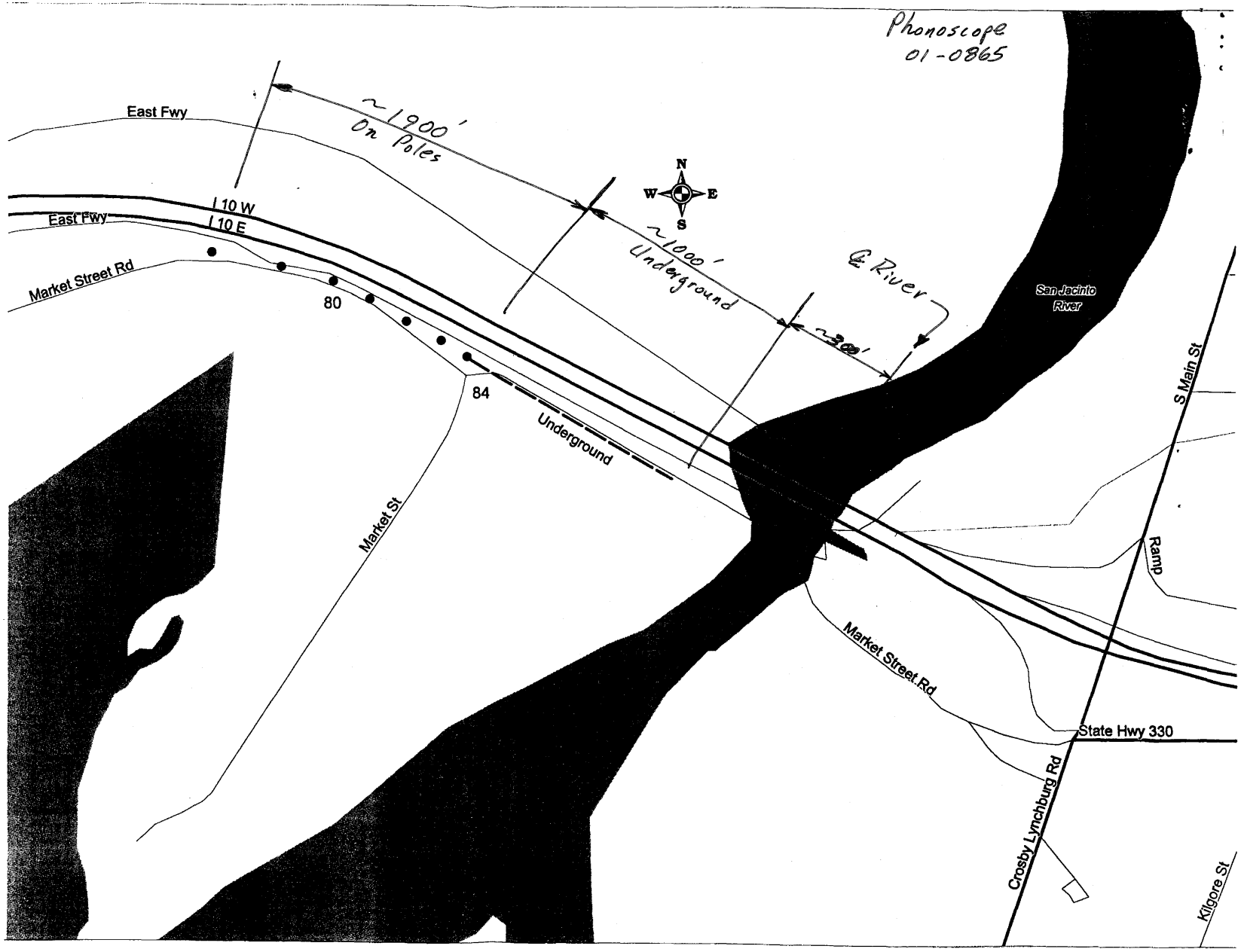
Phonoscope
01-0865
~1900'
On Poles
~1000'
Underground
~300'
℄ River
N
W
E
S
East Fwy
East Fwy
I 10 W
I 10 E
Market Street Rd
80
84
Underground
Market St
San Jacinto
River
S Main St
Ramp
Market Street Rd
State Hwy 330
Crosby Lynchburg Rd
Kilgore St

SW Bell
Permit 66-2697

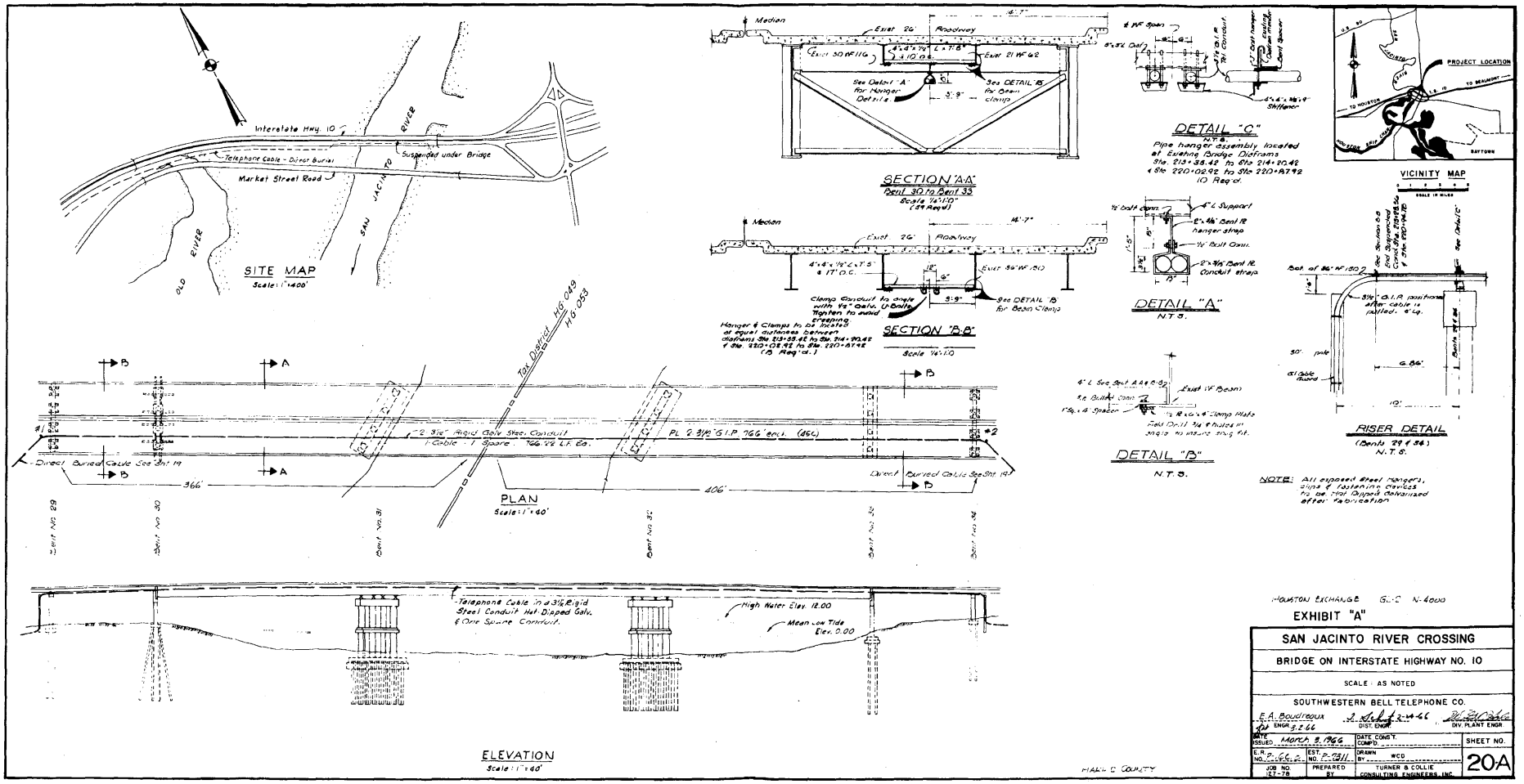

HOUSTON EXCHANGE G.C. N-4000

EXHIBIT "A"

SAN JACINTO RIVER CROSSING	
BRIDGE ON INTERSTATE HIGHWAY NO. 10	
SCALE: AS NOTED	
SOUTHWESTERN BELL TELEPHONE CO.	
E.A. Boudreaux, Dist. Engr. 3-2-66 / Dist. Engr. 3-14-66 / Div. Plant Engr.	
DATE ISSUED MARCH 8, 1966	DATE CONST. COMP'D.
E.R.P. NO. 66-2	EST. NO. P-7311
JOB NO. 127-78	PREPARED BY TURNER & COLLIE CONSULTING ENGINEERS, INC.
SHEET NO. 20A	

S W Bell Bridge Attachment Agreement
Jan. 9, 1995
1 of 13

Exhibit

EXHIBIT A

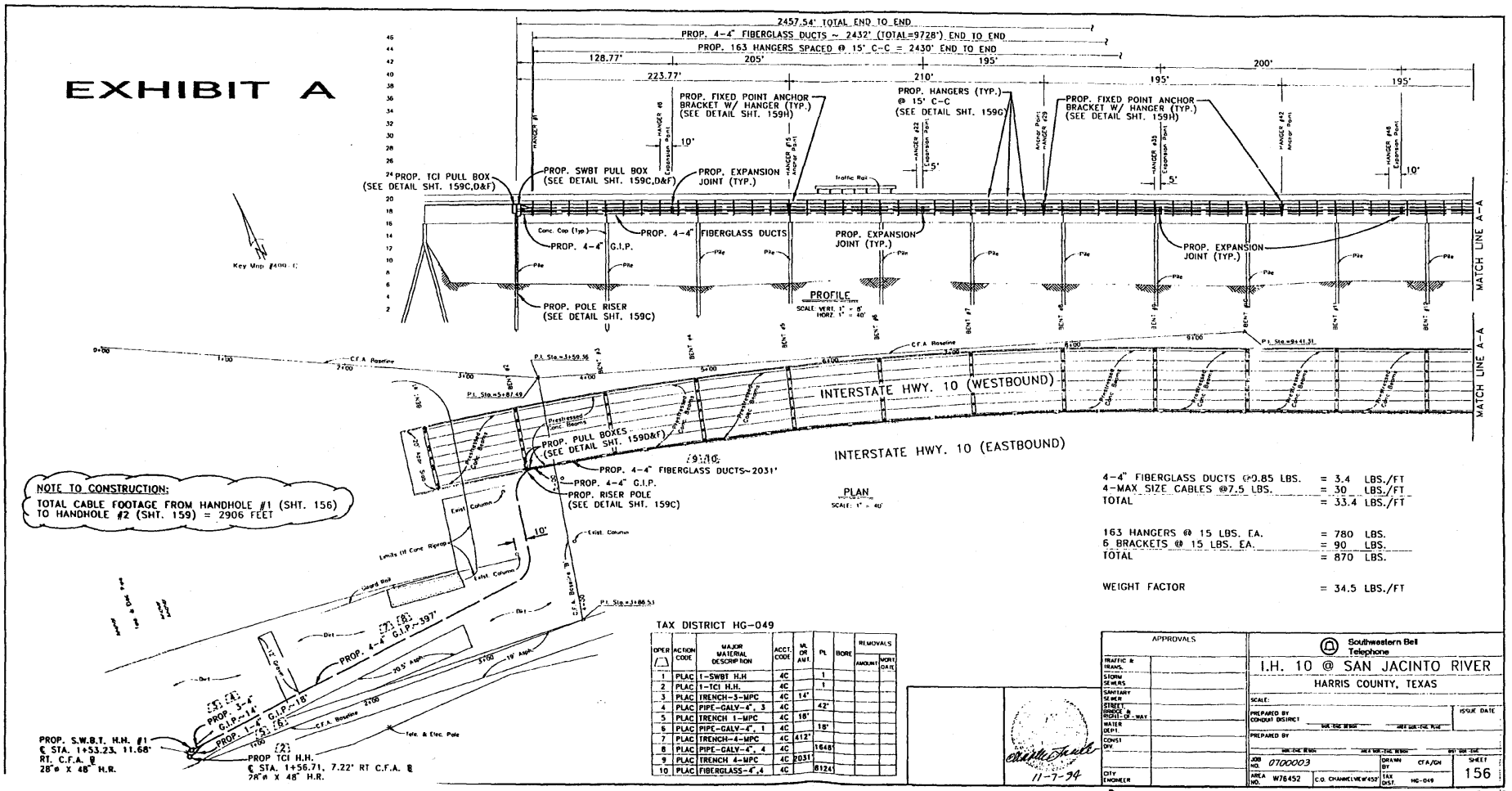

4-4" FIBERGLASS DUCTS @0.85 LBS. = 3.4 LBS./FT
4-MAX SIZE CABLES @7.5 LBS. = 30 LBS./FT
TOTAL = 33.4 LBS./FT

163 HANGERS @ 15 LBS. EA. = 780 LBS.
6 BRACKETS @ 15 LBS. EA. = 90 LBS.
TOTAL = 870 LBS.

WEIGHT FACTOR = 34.5 LBS./FT

TAX DISTRICT HG-049

OPER	ACTION CODE	MAJOR MATERIAL DESCRIPTION	ACCT. CODE	MA OR AWT.	PL	BORE	REMOVALS AMOUNT	REMOVALS WORK DATE
1	PLAC	1-SWBT H.H	4C		1			
2	PLAC	1-TCI H.H.	4C		1			
3	PLAC	TRENCH-3-MPC	4C	14'				
4	PLAC	PIPE-GALV-4", 3	4C		42'			
5	PLAC	TRENCH 1-MPC	4C	18'				
6	PLAC	PIPE-GALV-4", 1	4C		18'			
7	PLAC	TRENCH-4-MPC	4C	412'				
8	PLAC	PIPE-GALV-4", 4	4C		1648'			
9	PLAC	TRENCH 4-MPC	4C	2031'				
10	PLAC	FIBERGLASS-4",4	4C		8124'			

APPROVALS

TRAFFIC & TRANS.
STORM SEWERS
SANITARY SEWER
STREET, BRIDGE & RIGHT-OF-WAY
WATER DEPT.
CONST. DIV.
CITY ENGINEER

11-7-94

Southwestern Bell Telephone

I.H. 10 @ SAN JACINTO RIVER
HARRIS COUNTY, TEXAS

SCALE:
PREPARED BY CONDUIT DISTRICT
PREPARED BY
ISSUE DATE

JOB NO. 0700003
DRAWN BY CTA/CH
AREA NO. W76452
C.O. CHANNELVIEW#457
TAX DIST. HG-049
SHEET 156

942891BA 1:40

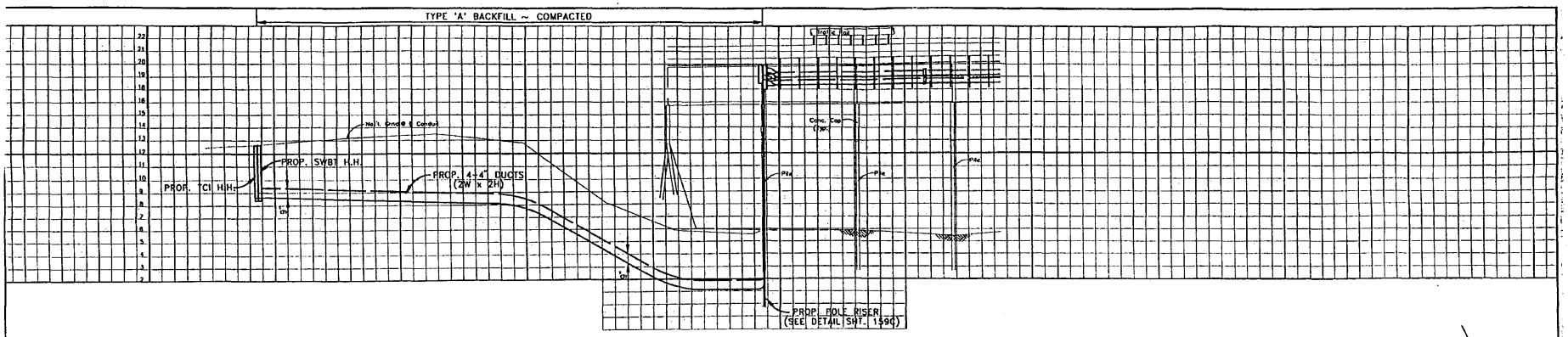

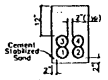

SECTION OF PROP. 4-4" DUCTS

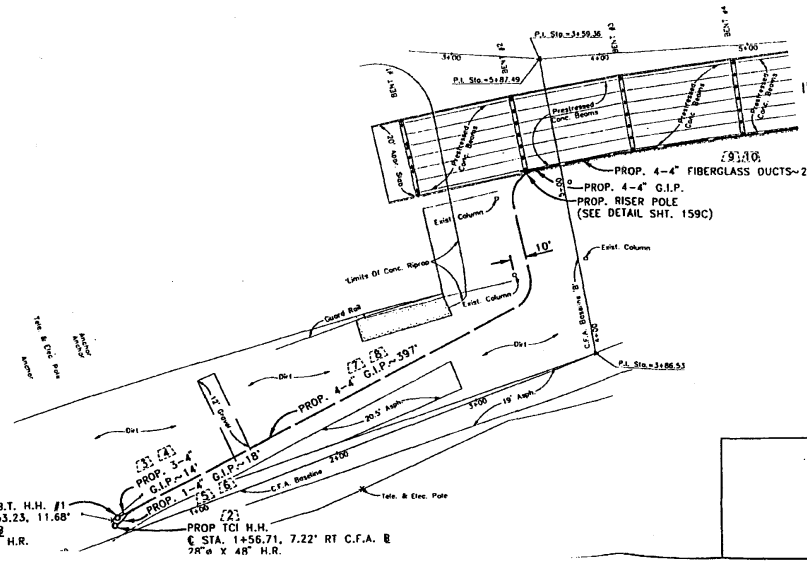

FOR PLACING INFO SEE SHEET 156

EXHIBIT A

APPROVALS	
TRAFFIC & TRANS.	
STORM SEWERS	
SANITARY SEWER	
STREET, BRIDGE & RIGHT-OF-WAY	
WATER DEPT.	
COWST DIV.	
CITY ENGINEER	

11-7-94

Southwestern Bell Telephone

I.H. 10 @ SAN JACINTO RIVER

HARRIS COUNTY, TEXAS

SCALE: PLAN 1"= 40' PROFILE VERT. 1"= 4' PROFILE HORZ. 1"= 40'

PREPARED BY CONDUIT DISTRICT

PREPARED BY

ISSUE DATE

JOB NO. 0100003 | DRAWN BY CFA/CH | SHEET 156A

AREA NO. W76452 | C.D. CHANNELVIEW452 | TAX DIST. HC-049

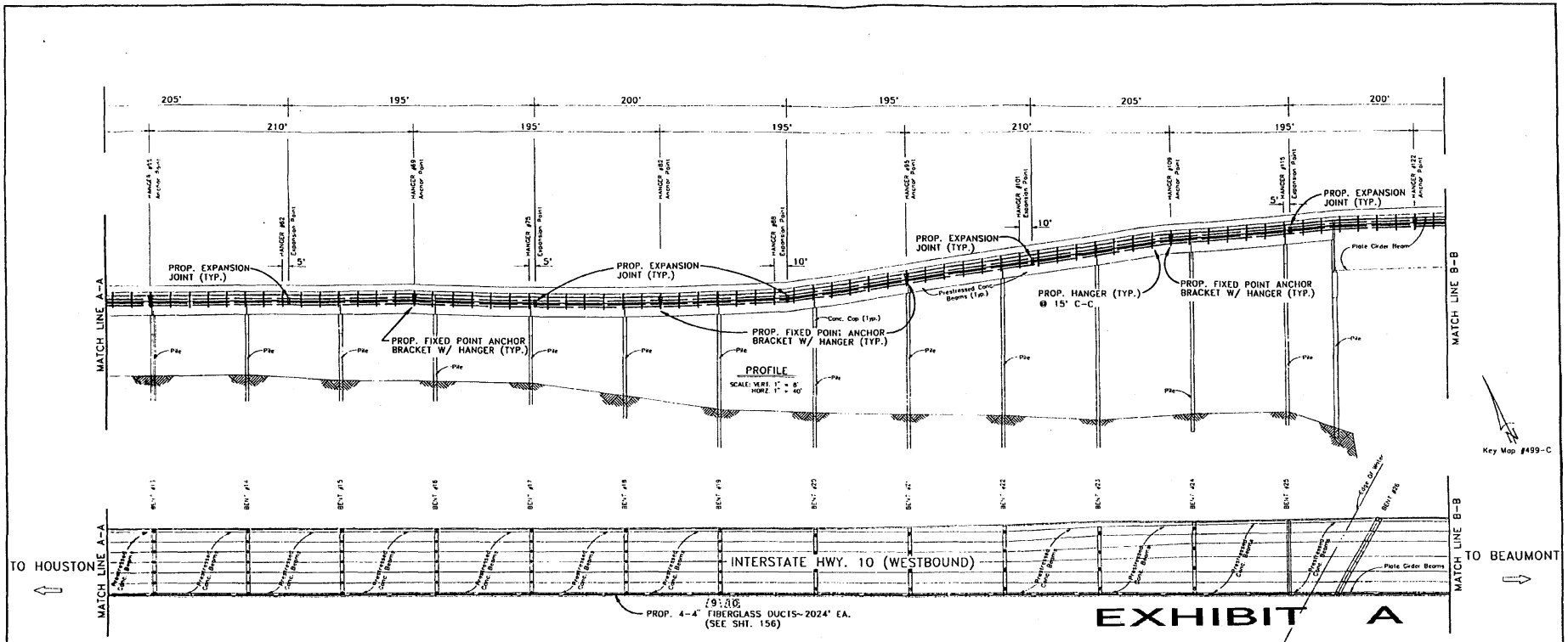

PLAN
SCALE: 1" = 40'

APPROVALS	
TRAFFIC & TRANS.	
STORM SEWERS	
SANITARY SEWER	
STREET, BRIDGE & RIGHT-OF-WAY	
WATER DEPT.	
CONST. DIV.	
CITY ENGINEER	

Southwestern Bell Telephone

I.H. 10 @ SAN JACINTO RIVER

HARRIS COUNTY, TEXAS

SCALE:

PREPARED BY CONDUIT DISTRICT — SUB.-CHE. DESIGN — AREA SUB.-CHE. PLAN

ISSUE DATE

PREPARED BY — SUB.-CHE. DESIGN — AREA SUB.-CHE. DESIGN — DIST. SUB.-CHE.

JOB NO. 0100003 — DRAWN BY CTA/CM — SHEET 157

AREA NO. W76452 — C.O. CHANNELVIEW#457 — TAX DIST. HG-049

94289188 1:40

COBB, FENDLEY & ASSOCIATES, INC JOB NO. 94289-01 F.B.# 860

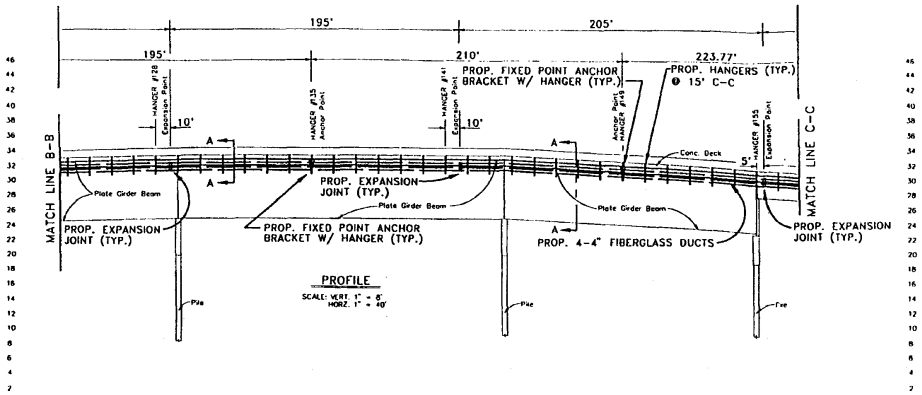

PROFILE

SCALE: VERT. 1" = 8'
HORZ. 1" = 40'

Key Map #499-C

TCI H.H. #1 (SHT. #156) TO ELEC. POLE (SHT. #159)
3302' W-W, 3303' C-C

SWBT H.H. #1 (SHT. #156) TO SWBT H.H. #2 (SHT. #159)
2857' W-W, 2860' C-C

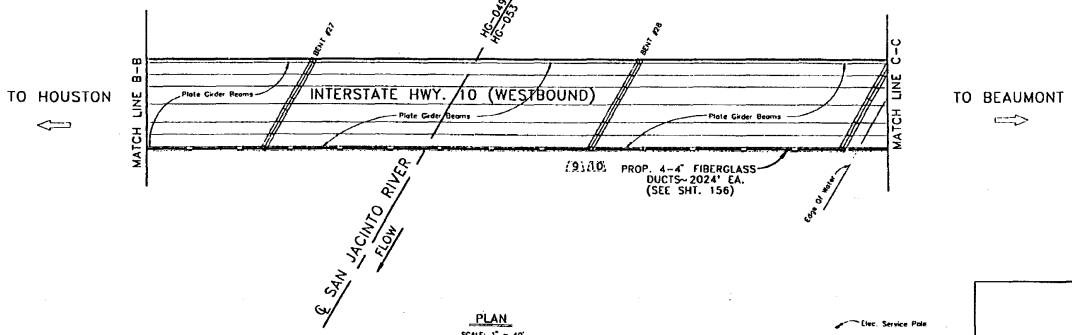

PLAN

SCALE: 1" = 40'

EXHIBIT A

APPROVALS	
TRAFFIC & TRANS.	
STORM SEWERS	
SANITARY SEWER	
STREET, BRIDGE & RIGHT-OF-WAY	
WATER DEPT.	
CONST. DIV.	
CITY ENGINEER	

11-7-94

Southwestern Bell Telephone

I.H. 10 @ SAN JACINTO RIVER

HARRIS COUNTY, TEXAS

SCALE:

PREPARED BY CONDUIT DISTRICT — HOR.-LINE DESIGN — HOR.-LINE DRAWN — VERT.-LINE DESIGN — VERT.-LINE DRAWN

ISSUE DATE

PREPARED BY — HOR.-LINE DESIGN — HOR.-LINE DRAWN — VERT.-LINE DESIGN — VERT.-LINE DRAWN

JOB NO. 0100003	DRAWN BY CFA/GH	SHEET 158
AREA NO. W76452	C.O. CHANNEL/VE W4527	TAX DIST. HG-049/HG-053

9428918C 1:40

COBB, FENDLEY & ASSOCIATES, INC JOB NO. 94289-01 F.B.# 860

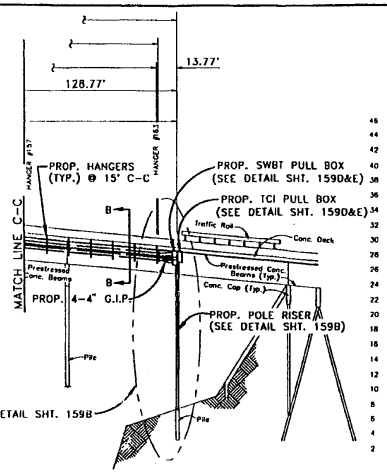

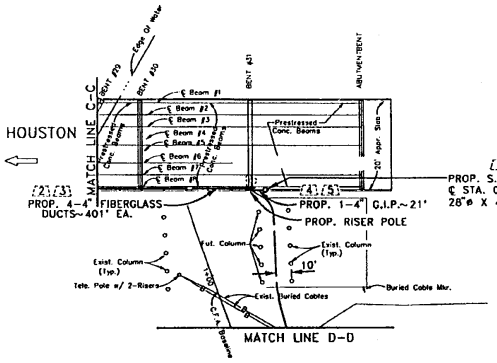

TO BEAUMONT

PROP. S.W.B.T. H.H. #2
℄ STA. 0+59, 53.5' LT C.F.A. ℄
28"ø X 48"H.R.

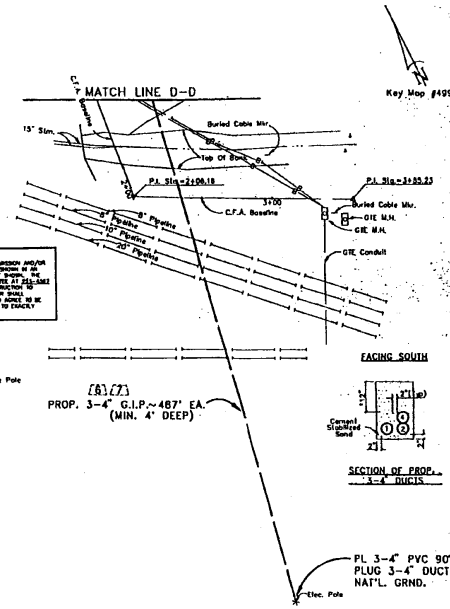

CAUTION: UNDERGROUND GAS FACILITIES
LOCATION OF EXISTING LINES (TO INCLUDE WATER GAS TRANSMISSION AND/OR INDUSTRIAL GAS SUPPLY CORPORATION MAIN) APPLICABLE) ARE SHOWN IN AN APPROXIMATE LOCATION ONLY. SERVICE LINES ARE USUALLY NOT SHOWN. THE CONTRACTOR SHALL CONTACT THE UTILITY COORDINATING COMMITTEE AT 713-2382 OR 1-800-669-8344 A MINIMUM OF TWO WORKING DAYS PRIOR TO CONSTRUCTION. THE CONTRACTOR SHALL PRECISELY LOCATE LINES FIELD LOCATION PRIOR TO CONSTRUCTION OR KNOW THE EXACT LOCATION BEFORE CONDUCTING WORK AND ARE TO BE FULLY RESPONSIBLE FOR ANY DAMAGES CAUSED BY THE FAILURE TO EXACTLY LOCATE AND PRESERVE THESE UNDERGROUND FACILITIES.

EXHIBIT A

TAX DISTRICT HG-053

OPER	ACTION CODE	MAJOR MATERIAL DESCRIPTION	ACCT. CODE	ML OR AMT.	PL	BORE	REMOVALS AMOUNT	REMOVALS MONT DATE
1	PLAC	1-SWBT HANDHOLE	4C		1			
2	PLAC	TRENCH-4-MPC	4C	401'				
3	PLAC	FIBERGLASS-4", 4	4C		1604			
4	PLAC	TRENCH-1-MPC	4C	46'				
5	PLAC	PIPE-GALV-4", 1	4C		46'			
6	PLAC	TRENCH-3-MPC	4C	487'				
7	PLAC	PIPE-GALV-4", 3	4C		1461			

STATE OF TEXAS
CHARLES S. FOWLER
49243
REGISTERED PROFESSIONAL ENGINEER
11-7-94

APPROVALS	
TRAFFIC & TRANS.	
STORM SEWERS	
SANITARY SEWER	
STREET, BRIDGE & RIGHT-OF-WAY	
WATER DEPT.	
CONST. DIV.	
CITY ENGINEER	

Southwestern Bell Telephone

I.H. 10 @ SAN JACINTO RIVER

HARRIS COUNTY, TEXAS

SCALE:

PREPARED BY CONDUIT DISTRICT — MKL-DAL DESIGN — MKL-DAL-DSL PLAN — ISSUE DATE

PREPARED BY — MKL-DAL DESIGN — MKL-DAL DESIGN — MKL-DAL-DSL

JOB NO. 0100003 — DRAWN BY — CFA/CH.

AREA NO. W76452 — C.O. CHANNELVIEW 48-8" — TAX DIST. HG-049/HG-053 — SHEET 159

COBB, FENDLEY & ASSOCIATES, INC. JOB NO. 94289-01 ; F.B. # 860 — 942891B0 1-94

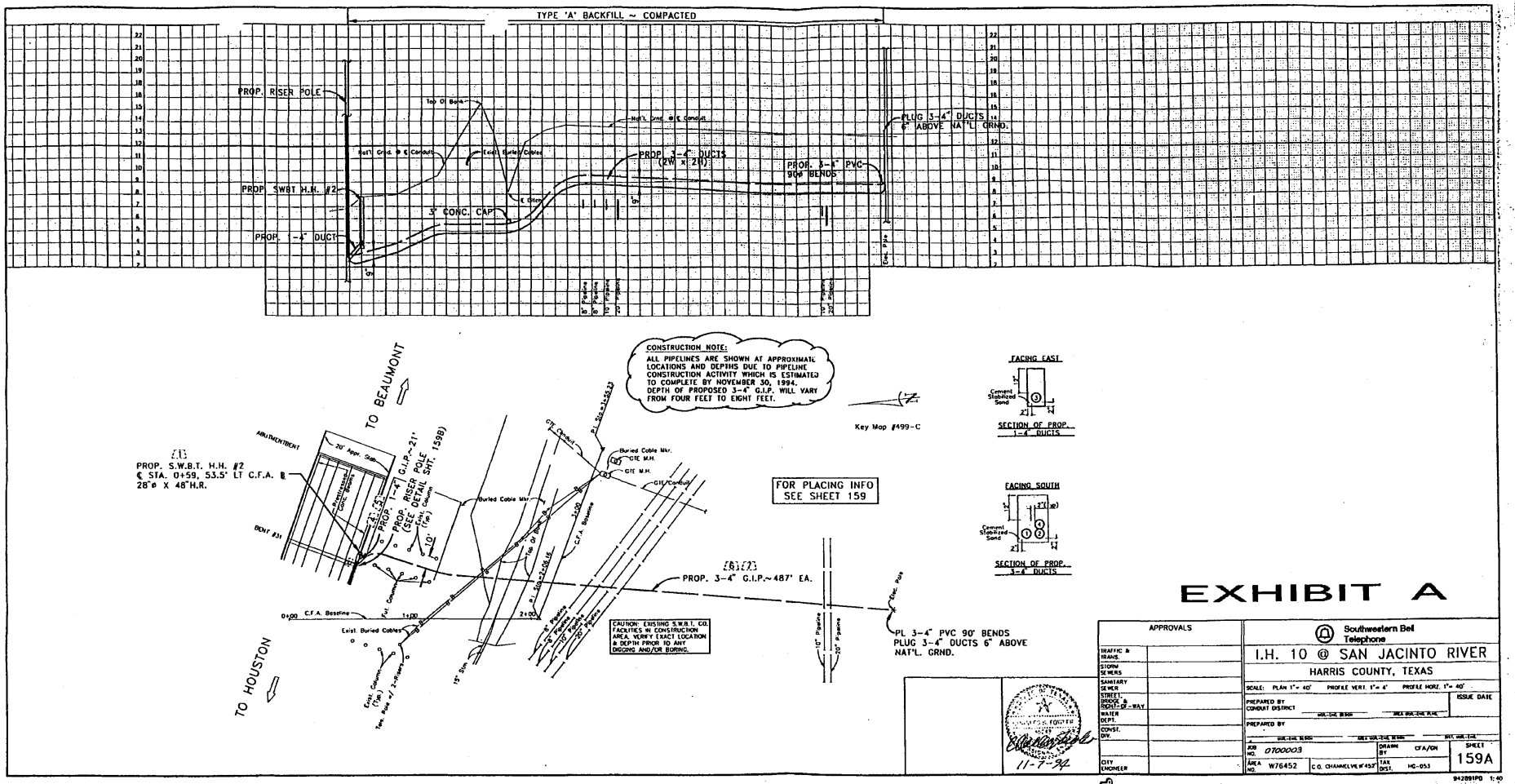

EXHIBIT A

APPROVALS	
TRAFFIC & TRANS.	
STORM SEWERS	
SANITARY SEWER	
STREET, BRIDGE & RIGHT-OF-WAY	
WATER DEPT.	
CONST. DIV.	
CITY ENGINEER	

STATE OF TEXAS — CHARLES FORSTER — REGISTERED PROFESSIONAL ENGINEER — 11-7-94

Southwestern Bell Telephone

I.H. 10 @ SAN JACINTO RIVER

HARRIS COUNTY, TEXAS

SCALE: PLAN 1"= 40' PROFILE VERT. 1"= 4' PROFILE HORZ. 1"= 40'

PREPARED BY CONDUIT DISTRICT — ISSUE DATE

PREPARED BY

JOB NO.	0700003	DRAWN BY	CFA/CN	SHEET
AREA NO.	W76452	C.O. CHANNELVIEW #457	TAX DIST. HC-053	159A

COBB, FENDLEY & ASSOCIATES, INC JOB NO. 94289-01 F.B.# 860

94289IPG 1:40

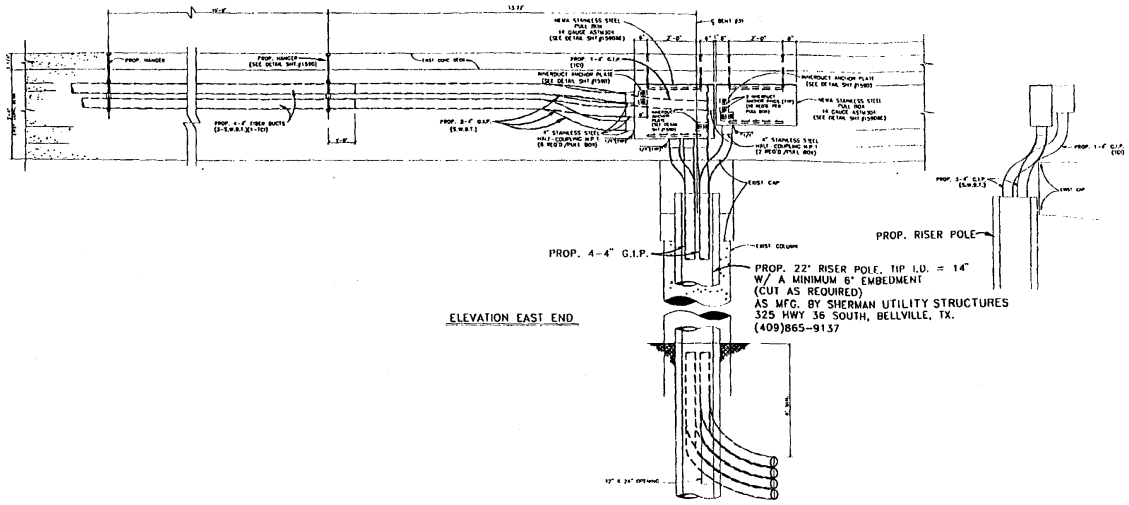

ELEVATION EAST END

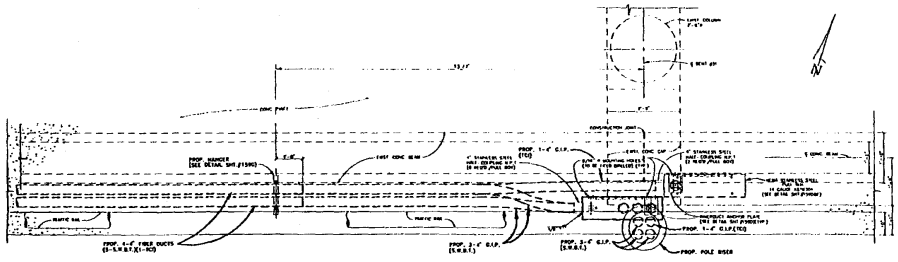

PLAN EAST END

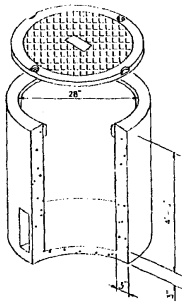

F023D-M48
QUICKSET® 28" DIAMETER
FIBER OPTICS SPLICE ENCLOSURE
N.T.S.

EXHIBIT A

APPROVALS	
TRAFFIC & SIGNAL DESIGN	
STORM SEWERS	
SANITARY SEWER	
STREET, BRIDGE & RIGHT-OF-WAY	
WATER DEPT.	
CONST DIV.	
CITY ENGINEER	

11-7-94

Southwestern Bell Telephone

I.H. 10 @ SAN JACINTO RIVER

HARRIS COUNTY, TEXAS

SCALE: 1/2" = 1'-0"

PREPARED BY CONDUIT DISTRICT — SUR. LINE DESIGN — MEX SUR. CHG PLAN — ISSUE DATE

PREPARED BY — SUR. LINE DESIGN — AREA SUR. LINE DESIGN — DIST. SUR. LINE

JOB NO. 070003		DRAWN BY CFA/DCM/GN	SHEET 159B
AREA NO. W7-6452	C.O. CHANGE LEVER 452	TAS DIST. HC-049 HC-053	

COBB, FENDLEY & ASSOCIATES, INC JOB NO. 94289-01 F.B.

94289108 1.20

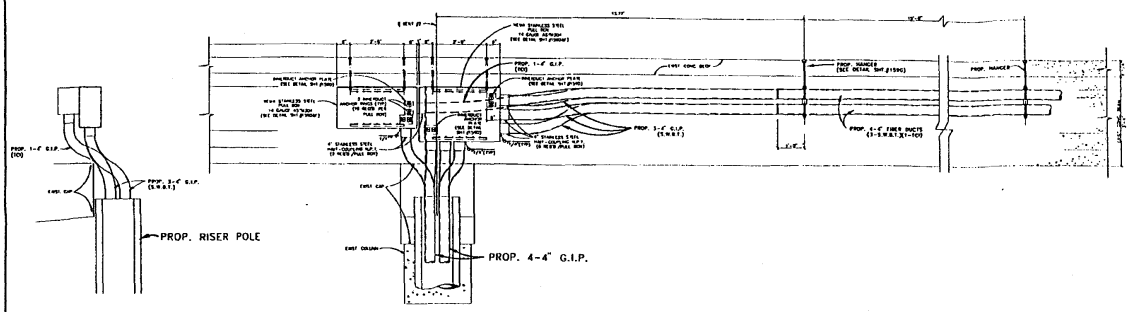

ELEVATION WEST END

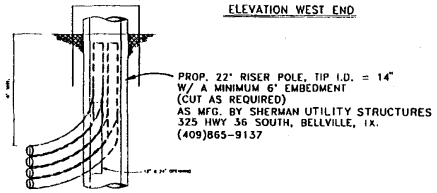

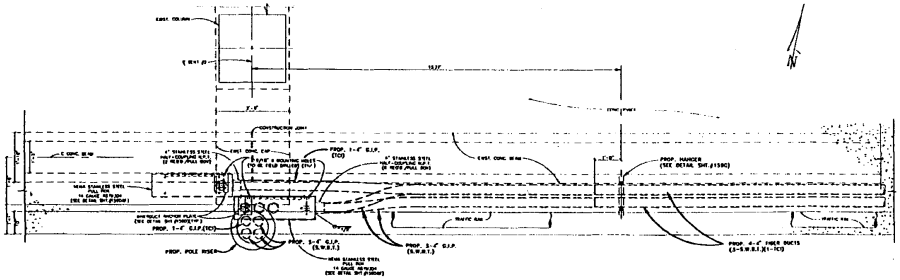

PLAN WEST END

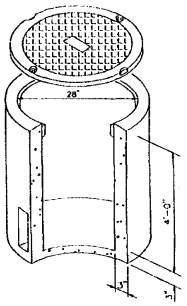

F023D-M48
QUICKSET 28" DIAMETER
FIBER OPTICS SPLICE ENCLOSURE
N.T.S.

EXHIBIT A

APPROVALS	
TRAFFIC & SIGNAL DESIGN	
STORM SEWERS	
SANITARY SEWER	
STREET, BRIDGE & RIGHT-OF-WAY	
WATER DEPT.	
CONST. DIV.	
CITY ENGINEER	

11-7-94

Southwestern Bell Telephone

I.H. 10 @ SAN JACINTO RIVER

HARRIS COUNTY, TEXAS

SCALE: 1/2" = 1'-0"

PREPARED BY CONDUIT DISTRICT

PREPARED BY

ISSUE DATE

JOB NO. 0700003		DRAWN BY CFA/DCM/CN	SHEET 159C
AREA NO. W7-6452	CO CHANNELVIEW 452	TAX DIST. HG-049	

COBB, FENDLEY & ASSOCIATES, INC JOB NO. 94289-01 F.B. # 860

94289IOC 1:20

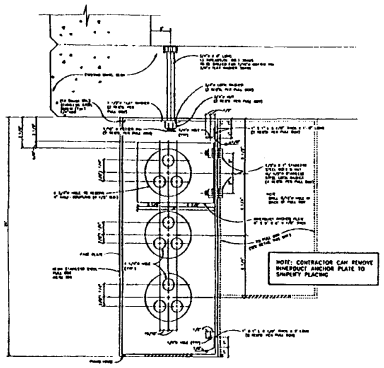

CROSS-SECTION OF S.W.B.T. CO. PULL BOX
SCALE 1" = 1'-0"

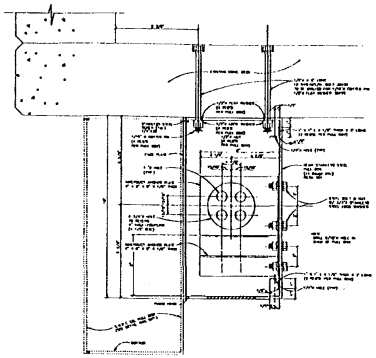

CROSS-SECTION OF TCI PULL BOX
SCALE 1" = 1'-0"

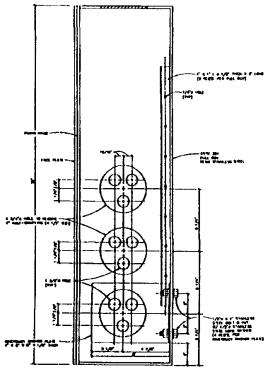

BOTTOM OF S.W.B.T. CO. PULL BOX
SCALE 1" = 1'-0"

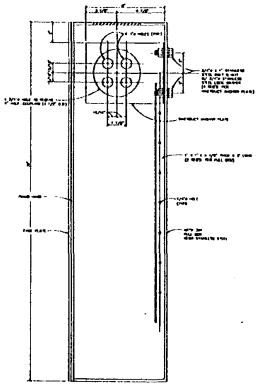

BOTTOM OF TCI PULL BOX
SCALE 1" = 1'-0"

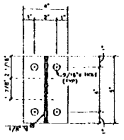

PLAN VIEW

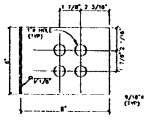

SIDE VIEW

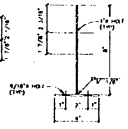

ELEVATION

INNERDUCT ANCHOR PLATE DETAIL
(2 REQ'D. PER PULL BOX)
4" x 4" x 1/8" THICK
SCALE 1/4" = 1"

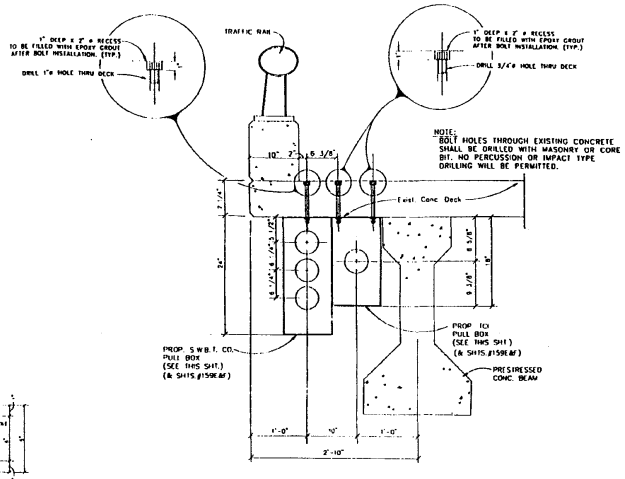

SECTION B-B
SCALE: 1" = 1'-0"

EXHIBIT A

APPROVALS	
TRAFFIC & SIGNAL DESIGN	
STORM SEWERS	
SANITARY SEWER	
STREET, BRIDGE & RIGHT-OF-WAY	
WATER DEPT.	
CONST. DIV.	
CITY ENGINEER	

11-7-94

Southwestern Bell Telephone

I.H. 10 @ SAN JACINTO RIVER

HARRIS COUNTY, TEXAS

SCALE: AS NOTED

PREPARED BY CONDUIT DISTRICT — HOR.-ENG. DESIGN — AREA HOR.-ENG. PLANS — ISSUE DATE

PREPARED BY — HOR.-ENG. DESIGN — AREA HOR.-ENG. DESIGN — DIST. HOR.-ENG.

JOB NO. 0700003 — DRAWN BY CFA/DCM/CH — SHEET 159D

AREA NO. W7-6452 — CO. CHANNELVIEW 452' — TAX DIST. HC-049 HC-053

94289100 1:20

COBB, FENDLEY & ASSOCIATES, INC JOB NO. 94289-01 F.B.

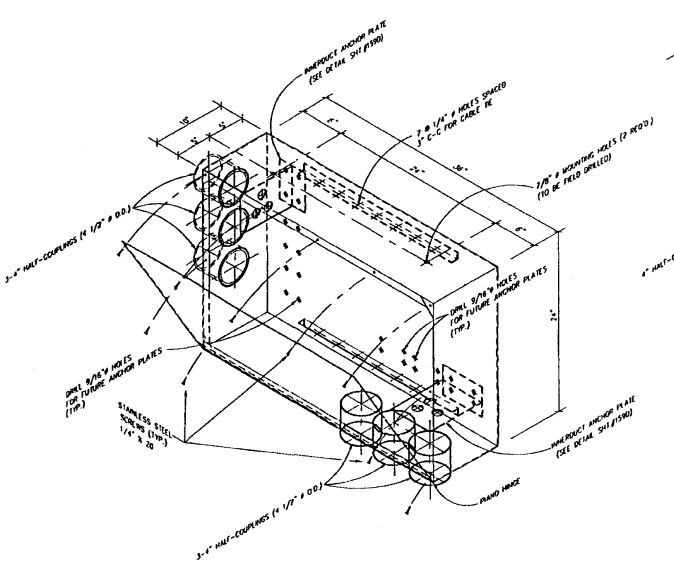

S.W.B.T. STAINLESS STEEL PULL BOX
EAST END OF BRIDGE
NEMA 36" X 24" X 10" SS

SCALE: 1 1/2" = 1'-0"
AS MFG. BY NEMA ENCLOSURE MFG. INC.
6831 AVE. W
HOUSTON, TEXAS 77011
OR EQUIVALENT
713-921-2233

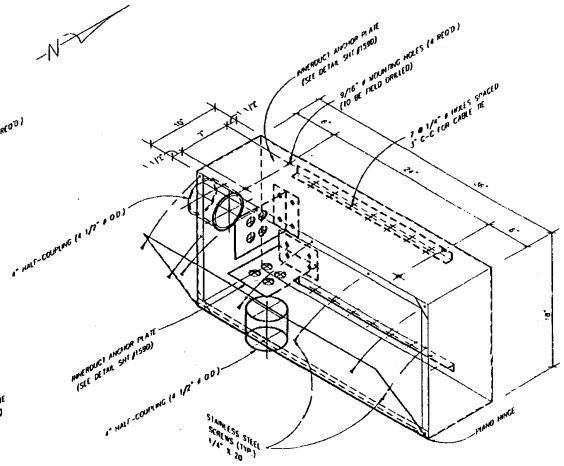

TCI STAINLESS STEEL PULL BOX
EAST END OF BRIDGE
NEMA 36" X 18" X 10" SS

SCALE: 1 1/2" = 1'-0"
AS MFG. BY NEMA ENCLOSURE MFG. INC.
6831 AVE. W
HOUSTON, TEXAS 77011
OR EQUIVALENT
713-921-2233

BILL OF MATERIAL FOR PULL BOXES

ITEM	DESCRIPTION	QUANTITY
(A)	NEMA 36" x 24" x 10" PULL BOX PER DRAWING (S.W.B.T. EAST END)	1
(B)	NEMA 36" x 24" x 10" PULL BOX PER DRAWING (S.W.B.T. WEST END)	1
(C)	NEMA 36" x 18" x 10" PULL BOX PER DRAWING (TCI EAST END)	1
(D)	NEMA 36" x 18" x 10" PULL BOX PER DRAWING (TCI WEST END)	1
(E)	INNER-DUCT ANCHOR PLATE (STAINLESS STEEL)	8
(F)	1/2"ø x 1"- 13 THRDS./IN. BOLTS 304SS	32
(G)	1/2"ø LOCK WASHERS 304SS	40
(H)	1/2"ø NYLOX NUTS - 13 THRDS./IN. 18-8 STAINLESS	32
(I)	3/4"ø x 8"- 13 THRDS./IN. BOLTS 304SS BOLTS TO BE DRILLED FOR 1/16"ø COTTER PINS (FOR MOUNTING S.W.B.T. BOX)	4
(J)	3/4"ø LOCK WASHERS 304SS	4
(K)	1 1/2"ø FLAT WASHERS 304SS (FOR MOUNTING S.W.B.T. BOX)	4
(L)	3/4"ø NYLOX NUTS - 13 THRDS./IN. 18-8 STAINLESS	4
(M)	1/2"ø x 8"- 13 THRDS./IN. BOLTS 304SS BOLTS TO BE DRILLED FOR 1/16"ø COTTER PINS (FOR MOUNTING TCI BOX)	8
(N)	1/2"ø FLAT WASHERS 304SS	16
(O)	1/16"ø COTTER PINS-STAINLESS	12
(P)	1/4" x 20 STAINLESS STEEL SCREWS FOR FACE PLATE	36

APPROX. WEIGHT PER PULL BOX = 102 lbs.

EXHIBIT A

APPROVALS

TRAFFIC & SIGNAL DESIGN	
STORM SEWERS	
SANITARY SEWER	
STREET, BRIDGE & RIGHT-OF-WAY	
WATER DEPT.	
CONST. DIV.	
CITY ENGINEER	11-7-94

Southwestern Bell Telephone

I.H. 10 @ SAN JACINTO RIVER

HARRIS COUNTY, TEXAS

SCALE: AS NOTED

PREPARED BY CONDUIT DISTRICT — MGR-ENG. DESIGN — AREA MGR-ENG. PLAN — ISSUE DATE

PREPARED BY — MGR-ENG. DESIGN — AREA MGR-ENG. DESIGN — DIST. MGR-ENG.

JOB NO. 0700003			DRAWN BY	CFA/DCH/GN	SHEET 159E
AREA NO. W7-6452	C.O.	CHANNELVIEW '452'	TAX DIST.	HC-053	

94289IDE 1:20

COBB, FENDLEY & ASSOCIATES, INC JOB NO. 94289-01 F.B.#

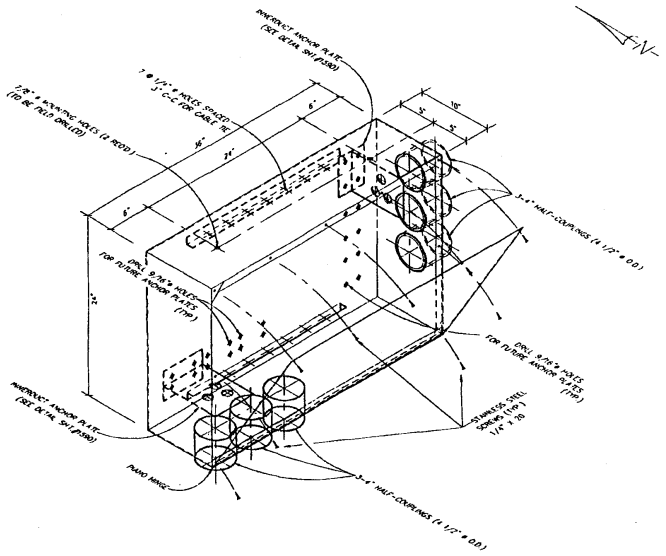

S.W.B.T. STAINLESS STEEL PULL BOX
WEST END OF BRIDGE
NEMA 36" X 24" X 10" SS
SCALE: 1 1/2" = 1'-0"
AS MFG. BY NEMA ENCLOSURE MFG. INC.
6831 AVE. W.
HOUSTON, TEXAS 77011
OR EQUIVALENT
713-921-2733

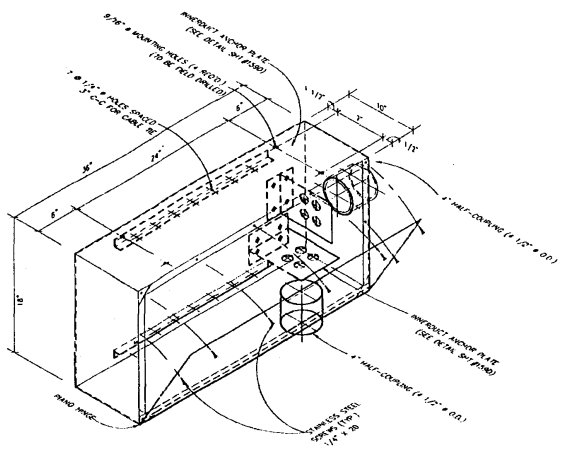

TCI STAINLESS STEEL PULL BOX
WEST END OF BRIDGE
NEMA 36" X 18" X 10" SS
SCALE: 1 1/2" = 1'-0"
AS MFG. BY NEMA ENCLOSURE MFG. INC.
6831 AVE. W.
HOUSTON, TEXAS 77011
OR EQUIVALENT
713-921-2733

EXHIBIT A

APPROVALS	
TRAFFIC & SIGNAL DESIGN	
STORM SEWERS	
SANITARY SEWER	
STREET, BRIDGE & RIGHT-OF-WAY	
WATER DEPT.	
CONST. DIV.	
CITY ENGINEER	C. Charles Jones 11-7-94

Southwestern Bell Telephone

I.H. 10 @ SAN JACINTO RIVER

HARRIS COUNTY, TEXAS

SCALE: AS NOTED

PREPARED BY CONDUIT DISTRICT — NOR-TRAC DESIGN — AREA NOR-CAD, PLANS

ISSUE DATE

PREPARED BY — NOR-TRAC DESIGN — AREA NOR-CAD DESIGN — AREA NOR-TRC

JOB NO.	0100003		DRAWN BY	CFA/DCM/GH	SHEET
AREA NO.	W7-6457	C.O. CHANNELVIEW 457	TAX DIST.	HG-049	159F

COBB, FENDLEY & ASSOCIATES, INC JOB NO. 94269-01 F.B.

94269IDF 1:20

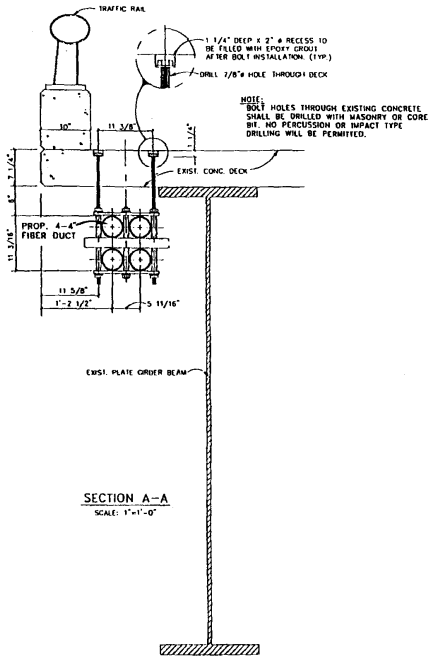

SECTION A-A
SCALE: 1"=1'-0"

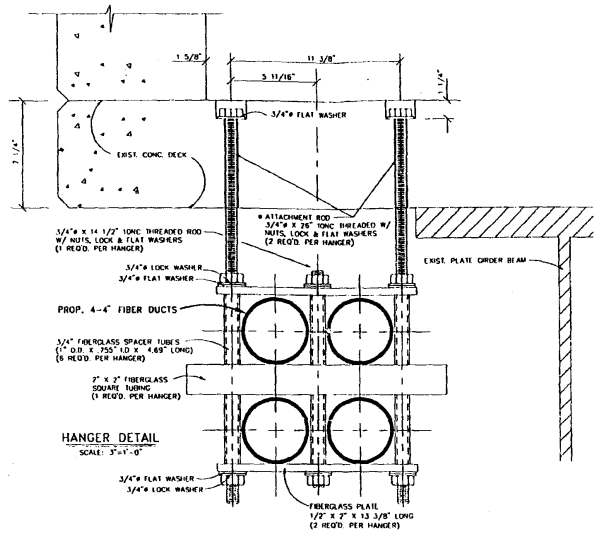

HANGER DETAIL
SCALE: 3"=1'-0"

BILL OF MATERIALS
FOR CONDUIT HANGERS & EXPANSION JOINTS

ITEM	DESCRIPTION	NO. REQ'D.
* AMERICAN U-TEL FIBERGLASS DUCT SUPPORT HANGER	STANDARD HANGING FOR 4-4" FIBERGLASS DUCTS - 2W x 2H (HOT DIP GALVANIZED HARDWARE) (APPROX. WEIGHT/HANGER = 15 LBS.)	163
FIXED POINT ANCHOR BRACKET	2 EA. PER FIXED ANCHOR POINT	22
AMERICAN U-TEL ATTACHMENT ROD	3/4"ø x 8" 10NC THREADED w/ NUTS & LOCK WASHERS HOT DIP GALVANIZED (2 EA. PER FIXED POINT ANCHOR BRACKET)	44
AMERICAN U-TEL FLAT WASHER	3/4"ø FLAT WASHER HOT DIP GALVANIZED (2 EA. PER FIXED POINT ANCHOR BRACKET)	44
AMERICAN U-TEL SPLIT ANCHOR RING #12351	SPLIT ANCHOR RING (4 EA. PER FIXED POINT ANCHOR BRACKET)	88
AMERICAN U-TEL RED THREAD FIBERGLASS EXPANSION JOINT #12353	NON-GASKETED EXPANSION JOINT	12
AMERICAN U-TEL FIBERGLASS CONDUIT #12370-04	4" FIBERGLASS PIPE (APPROX. WEIGHT/FT. = .85 LBS.)	9728'

* ATTACHMENT RODS TO BE 3/4"ø x 26" LONG 10NC THREADED HOT DIP GALVANIZED

HANGERS MANUFACTURED BY :
AMERICAN U-TEL
9760 SMITH RD.
WILLOUGHBY, OHIO 44094
TELE. #(216)946-6027

1. LANE CLOSURE OF I.H. 10 WILL BE PERMITTED FROM 6:00 A.M. UNTIL 5:00 P.M. ON SATURDAYS AND SUNDAYS ONLY.
2. ALL BOLT HOLES DRILLED THROUGH THE BRIDGE DECK WILL BE FILLED WITH EPOXY GROUT AFTER BOLT INSTALLATION.
3. S.W.B.T. CO. WILL PROVIDE ALL GALVANIZED IRON PIPE, FIBER GLASS PIPE, PIPE HANGERS, ANCHOR BOLTS, BRACKETS, EXPANSION JOINTS, AND ASSOCIATED HARDWARE FOR MOUNTING AND/OR PLACING PULL BOXES, HANDHOLES, AND PRESTRESSED CONCRETE RISER POLES FOR THIS PROJECT.

ALL ANCHOR PARTS TO BE HOT DIPPED GALVANIZED IN ACCORDANCE WITH ASTM SPECIFICATION A-123

STRUCTURAL STEEL SHALL BE IN ACCORDANCE WITH ASTM SPECIFICATION A-36.

BOLT, NUTS & WASHERS MUST BE IN ACCORDANCE WITH ASTM SPECIFICATION A-325.

EXHIBIT A

APPROVALS	
TRAFFIC & SIGNAL DESIGN	
STORM SEWERS	
SANITARY SEWER	
STREET, BRIDGE & RIGHT-OF-WAY	
WATER DEPT.	
CONST. DIV.	
CITY ENGINEER	11-7-94

Southwestern Bell Telephone

I.H. 10 @ SAN JACINTO RIVER

HARRIS COUNTY, TEXAS

SCALE: AS NOTED

PREPARED BY CONDUIT DISTRICT — HDR-ENG. DESIGN — AREA HDR-ENG. PLANS

PREPARED BY — HDR-ENG. DESIGN — AREA HDR-ENG. DESIGN — DIST. HDR-ENG.

ISSUE DATE

JOB NO. 0100003 — DRAWN BY CFA/GH — SHEET 159G

AREA NO. W7-6457 — CO. CHANNELVIEW '452' — TAX DIST. HG-049 HG-053

COBB, FENDLEY & ASSOCIATES, INC JOB NO. 94248-01 F.B.#

94289100 1:1

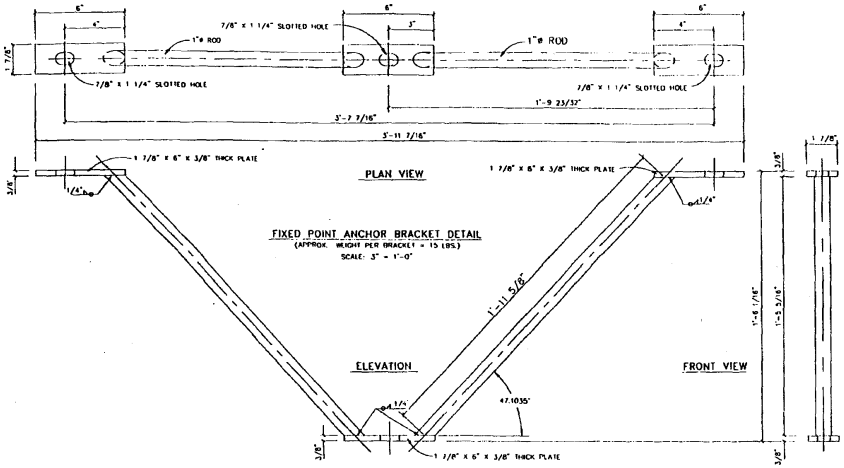

FIXED POINT ANCHOR BRACKET DETAIL
(APPROX. WEIGHT PER BRACKET = 15 LBS.)
SCALE: 3" = 1'-0"

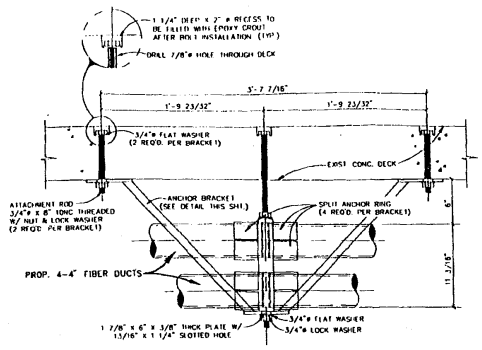

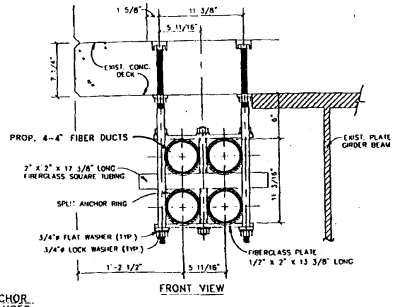

FIXED POINT ANCHOR BRACKET W/ HANGER
(APPROX. WEIGHT PER BRACKET W/ HANGER = 30 LBS.)

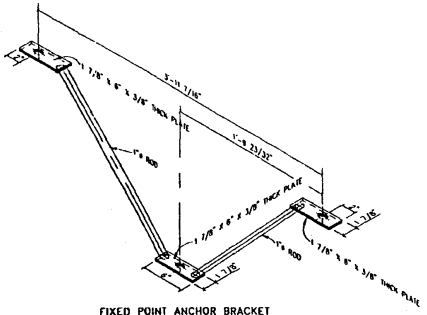

FIXED POINT ANCHOR BRACKET
(2 REQ'D. PER FIXED POINT HANGER)
SCALE: 1 1/2" = 1'-0"

NOTE:

ALL ANCHOR PARTS TO BE HOT DIPPED GALVANIZED IN ACCORDANCE WITH ASTM SPECIFICATION A-123 AFTER FABRICATION.

STRUCTURAL STEEL SHALL BE IN ACCORDANCE WITH ASTM SPECIFICATION A-36.

BOLT, NUTS & WASHERS MUST BE IN ACCORDANCE WITH ASTM SPECIFICATION A-325.

EXHIBIT A

APPROVALS	
TRAFFIC & SIGNAL DESIGN	
STORM SEWERS	
SANITARY SEWER	
STREET, BRIDGE & RIGHT-OF-WAY	
WATER DEPT.	
CONST. DIV.	
CITY ENGINEER	

11-7-94

Southwestern Bell Telephone

I.H. 10 @ SAN JACINTO RIVER

HARRIS COUNTY, TEXAS

SCALE: AS NOTED

PREPARED BY CONDUIT DISTRICT — SUR.-ENG. DESIGN — AREA SUR.-ENG. PLANS — ISSUE DATE

PREPARED BY — SUR.-ENG. DESIGN — AREA SUR.-ENG. DESIGN — DIST. SUR.-ENG.

JOB NO. 0100003		DRAWN BY CFA/GM	SHEET 159H
AREA NO. W7-6457	C.O. CHANNELVIEW '452'	TAX DIST. HG-049 HG-053	

COBB, FENDLEY & ASSOCIATES, INC JOB NO. 94289-01 F.B.

942891DH 1-1