EPA

Form Approved
OMB No. 2010-0019
Approval Expires 12-31-89

UNITED STATES ENVIRONMENTAL PROTECTION AGENCY

Comprehensive Assessment Information Rule

REPORTING FORM

90-9300000 11

EPA-OTS
000787026U

When completed, send this form to:

Document Processing Center
Office of Toxic Substances, TS-790
U.S. Environmental Protection Agency
401 M Street, SW
Washington, DC 20460
Attention: CAIR Reporting Office

For Agency Use Only:

Date of Receipt: _____

Document Control Number: _____

Docket Number: _____

EPA Form 7710-52

_____4. Have you submitted a completed separate form for each substance you are required to report on?

_____5. Have you submitted a completed separate form for each site at which you manufacture, import, or process a listed substance?

_____6. For each listed substance you must report on, have you reported on all activities you engage in at each site using the listed substance on the same reporting form?

_____7. If you are claiming information as Confidential Business Information (CBI), have you completed the CBI substantiation form in Appendix II of the form for each category containing CBI? Failure to submit a completed CBI substantiation form with a reporting form containing CBI will result in the waiver of your claim of confidentiality.

_____8. For each question that you are required to answer, have you responded by either providing the data, stating not applicable ("N/A"), or, if the question permits, stating unknown ("UK")?

_____9. Have you right justified your responses to questions asked that require respondents to give a numeric response in a series of boxes (e.g., the answer "372" is entered as [0][0][3][7][2])?

_____10. Have your responses been given in alpha, numeric or alpha-numeric form such as 3 million or 3,000,000? Responses must not be given in scientific notation such as 3×10^6.

_____11. If you needed additional space to report the required data, have you checked the continuation sheet box at the bottom of each page that requires additional space; attached additional copies of the specific questions of this form that contain additional information; and listed the attachments in Appendix I of the reporting form?

1.03 Does the substance you are reporting on have an "x/p" designation associated with i in the above-listed Federal Register Notice?

CBI

[ ]

Yes ..... [X] Go to question 1.(

No ..... [ ] Go to question 1.(

1.04 a. Do you manufacture, import, or process the listed substance and distribute it under a trade name(s) different than that listed in the Federal Register Notice? Circle the appropriate response.

CBI

[ ]

(Yes) .....(

No .....

b. Check the appropriate box below:

[X] You have chosen to notify your customers of their reporting obligations

Provide the trade name(s) .... SMRD 900 Series

[ ] You have chosen to report for your customers

[ ] You have submitted the trade name(s) to EPA one day after the effective date of the rule in the Federal Register Notice under which you are reporting.

1.05 If you buy a trade name product and are reporting because you were notified of your reporting requirements by your trade name supplier, provide that trade name.

CBI

[ ]

Trade name ....N/A..... _____

Is the trade name product a mixture? Circle the appropriate response.

Yes .....

No .....

1.06 Certification -- The person who is responsible for the completion of this form must sign the certification statement below:

CBI

[ ]

"I hereby certify that, to the best of my knowledge and belief, all information entered on this form is complete and accurate."

Charles B. Chilton	CB Chilton	10/30/89
NAME	SIGNATURE	DATE SIGNED

Manager, Industrial Safety	(215) 354 - 4570
TITLE	TELEPHONE NO.

[ ] Mark (X) this box if you attach a continuation sheet.

PART B CORPORATE DATA

1.09 Facility Identification

CBI Name [G][E][N][E][R][A][L] [E][L][E][C][T][R][I][C] [A][S][T][R][O] SP AC E

[ ] Address [2][3][0] [G][O][D][A][R][D] [R][I][V][D]
Street

[K][I][N][G] [O][F] [P][R][U][S][S][I][A]
City

[P][A] [1][9][4][0][6]--[ ]
State Zip

Dun & Bradstreet Number .....[0][0]-[1][6][8]-[0][7][1][9]

EPA ID Number .....[0][0][1][6][8][0][7][1][9]

Employer ID Number .....[ ]

Primary Standard Industrial Classification (SIC) Code .....[3][7][6][9]

Other SIC Code .....[ ]

Other SIC Code .....[ ]

1.10 Company Headquarters Identification

CBI Name [G][E][N][E][R][A][L] [E][L][E][C][T][R][I][C] [C][O]

[ ] Address [3][1][3][5] [E][A][S][T][O][N] [I][U][R][N][P][I][K][E]
Street

[F][A][I][R][F][I][E][L][D]
City

[C][T] [0][6][4][3][1]--[ ]
State Zip

Dun & Bradstreet Number .....[0][0]-[1][6][8]-[0][7][1][9]

Employer ID Number .....[1][4][0][6][8][9][3][4]

[ ] Mark (X) this box if you attach a continuation sheet.

1.14 Facility Acquired -- If you purchased this facility during the reporting year, provide the following information about the seller:

CBI Name of Seller [ ]

[ ] Mailing Address [ ]
Street

[ ]
City

[ ][ ] [ ][ ][ ][ ][ ]--[ ][ ][ ][ ]
State Zip

Employer ID Number .....[ ][ ][ ][ ][ ][ ][ ][ ]

Date of Sale .....[ ][ ] [ ][ ] [ ][ ]
Mo. Day Yea

Contact Person [ ]

Telephone Number .....[ ][ ][ ]-[ ][ ][ ]-[ ][ ][ ][ ]

1.15 Facility Sold -- If you sold this facility during the reporting year, provide the following information about the buyer:

CBI Name of Buyer [ ]

[ ] Mailing Address [ ]
Street

[ ]
City

[ ][ ] [ ][ ][ ][ ][ ]--[ ][ ][ ][ ]
State Zip

Employer ID Number .....[ ][ ][ ][ ][ ][ ][ ][ ]

Date of Purchase .....[ ][ ] [ ][ ] [ ][ ]
Mo. Day Yea

Contact Person [ ]

Telephone Number .....[ ][ ][ ]-[ ][ ][ ]-[ ][ ][ ][ ]

[ ] Mark (X) this box if you attach a continuation sheet.

PART C IDENTIFICATION OF MIXTURES

1.17 Mixture -- If the listed substance on which you are required to report is a mixture or a component of a mixture, provide the following information for each component chemical. (If the mixture composition is variable, report an average percentage of each component chemical for all formulations.)

CBI

[ ]

Component Name	Supplier Name	Average % Composition by Weight (specify precision, e.g., 45% ± 0.5%)
2,4-toluene diisocyanate	Morton Thiokol, Inc.	6.5% ± .5%
UK		
		Total 100%

Note: Material Safety Data Sheet identifies only one hazardous ingredient; no other ingredients are identified.

[ ] Mark (X) this box if you attach a continuation sheet.

2.04 State the quantity of the listed substance that your facility manufactured, imported, or processed during the 3 corporate fiscal years preceding the reporting year in descending order.

CBI

[ ] Year ending ..... [1][2] [8 7
Mo. Year

Quantity manufactured ..... N/A kg

Quantity imported ..... N/A kg

Quantity processed ..... 22.0 kg

Year ending ..... [1][2] [8][6
Mo. Year

Quantity manufactured ..... N/A

Quantity imported ..... N/A k

Quantity processed ..... 22.0 k

Year ending ..... [1][2] [8][5
Mo. Year

Quantity manufactured ..... N/A k

Quantity imported ..... N/A k

Quantity processed ..... 22.0 k

2.05 Specify the manner in which you manufactured the listed substance. Circle all appropriate process types.

CBI N/A

[ ]

Continuous process .....

Semicontinuous process .....

Batch process .....

[ ] Mark (X) this box if you attach a continuation sheet.

2.09 For the three largest volume manufacturing or processing process types involving the listed substance, specify the number of days you manufactured or processed the listed substance during the reporting year. Also specify the average number of hours per day each process type was operated. (If only one or two operations are involved, list those.)

CBI

[ ]

	Days/Year	Average Hours/Day
Process Type #1 (The process type involving the largest quantity of the listed substance.)		
Manufactured	N/A	N/A
Processed	180	4
Process Type #2 (The process type involving the 2nd largest quantity of the listed substance.)		
Manufactured	N/A	N/A
Processed	250	1
Process Type #3 (The process type involving the 3rd largest quantity of the listed substance.)		
Manufactured	N/A	N/A
Processed	250	6

→ 2.10 State the maximum daily inventory and average monthly inventory of the listed substance that was stored on-site during the reporting year in the form of a bulk chemical.

CBI

[ ]

Maximum daily inventory ..... 8.6 kg

Average monthly inventory ..... 8.6 kg

[ ] Mark (X) this box if you attach a continuation sheet.

2.12 Existing Product Types -- List all existing product types which you manufactured, imported, or processed using the listed substance during the reporting year. List the quantity of listed substance you use for each product type as a percentage of the total volume of listed substance used during the reporting year. Also list the quantity of listed substance used captively on-site as a percentage of the value listed under column b., and the types of end-users for each product type. (Refer to the instructions for further explanation and an example.)

CBI
[ ]

a. Product Types[1]	b. % of Quantity Manufactured, Imported, or Processed	c. % of Quantity Used Captively On-Site	d. Type of End-Users[2]
K	100	99	H
N/A	N/A	N/A	N/A

[1]Use the following codes to designate product types:

A = Solvent
B = Synthetic reactant
C = Catalyst/Initiator/Accelerator/Sensitizer
D = Inhibitor/Stabilizer/Scavenger/Antioxidant
E = Analytical reagent
F = Chelator/Coagulant/Sequestrant
G = Cleanser/Detergent/Degreaser
H = Lubricant/Friction modifier/Antiwear agent
I = Surfactant/Emulsifier
J = Flame retardant
K = Coating/Binder/Adhesive and additives
L = Moldable/Castable/Rubber and additive
M = Plasticizer
N = Dye/Pigment/Colorant/Ink and additive
O = Photographic/Reprographic chemical and additives
P = Electrodeposition/Plating chemicals
Q = Fuel and fuel additives
R = Explosive chemicals and additives
S = Fragrance/Flavor chemicals
T = Pollution control chemicals
U = Functional fluids and additives
V = Metal alloy and additives
W = Rheological modifier
X = Other (specify) N/A

[2]Use the following codes to designate the type of end-users:

I = Industrial
CM = Commercial
CS = Consumer
H = Other (specify) Government

[ ] Mark (X) this box if you attach a continuation sheet.

2.14 CBI [ ] Final Product -- Complete the following table for each type of final product manufactured, imported, or processed at your facility that contains the listed substance other than as an impurity.

a. Product Type[1]	b. Final Product's Physical Form[2]	c. Average % Composition of Listed Substance in Final Product	d. Type of End-Users[3]
K	F4	100	H
K	B	100	H
N/A	N/A	N/A	N/A

[1]Use the following codes to designate product types:

A = Solvent
B = Synthetic reactant
C = Catalyst/Initiator/Accelerator/Sensitizer
D = Inhibitor/Stabilizer/Scavenger/Antioxidant
E = Analytical reagent
F = Chelator/Coagulant/Sequestrant
G = Cleanser/Detergent/Degreaser
H = Lubricant/Friction modifier/Antiwear agent
I = Surfactant/Emulsifier
J = Flame retardant
K = Coating/Binder/Adhesive and additives
L = Moldable/Castable/Rubber and additive
M = Plasticizer
N = Dye/Pigment/Colorant/Ink and additive
O = Photographic/Reprographic chemical and additives
P = Electrodeposition/Plating chemicals
Q = Fuel and fuel additives
R = Explosive chemicals and additives
S = Fragrance/Flavor chemicals
T = Pollution control chemicals
U = Functional fluids and additives
V = Metal alloy and additives
W = Rheological modifier
X = Other (specify) N/A

[2]Use the following codes to designate the final product's physical form:

A = Gas
B = Liquid
C = Aqueous solution
D = Paste
E = Slurry
F1 = Powder
F2 = Crystalline solid
F3 = Granules
F4 = Other solid
G = Gel
H = Other (specify) N/A

[3]Use the following codes to designate the type of end-users:

I = Industrial
CM = Commercial
CS = Consumer
H = Other (specify) Government

[ ] Mark (X) this box if you attach a continuation sheet.

2.17 State the quantity of the listed substance that you exported during the reporting
CBI year.

[ ]

In bulk ..... _____ kg/y

As a mixture ..... _____ kg/y

In articles ..... _____ kg/y

[ ] **Mark (X) this box if you attach a continuation sheet.**

3.03 a. Circle all applicable containers used to transport the listed substance to your facility.
CBI

[ ]

Bags 1

Boxes 2

Free standing tank cylinders 3

Tank rail cars 4

Hopper cars 5

Tank trucks 6

Hopper trucks 7

Drums 8

Pipeline 9

Other (specify) 5 gallon can 10

b. If the listed substance is transported in pressurized tank cylinders, tank rail cars, or tank trucks, state the pressure of the tanks.

Tank cylinders ..N/A..... _____ mmHg

Tank rail cars ..N/A..... _____ mmHg

Tank trucks .....N/A..... _____ mmHg

[ ] Mark (X) this box if you attach a continuation sheet.

PART C RAW MATERIAL VOLUME

3.05 State the quantity of the listed substance used as a raw material during the
CBI reporting year in the form of a class I chemical, class II chemical, or polymer, and the percent composition, by weight, of the listed substance.

[ ]

	Quantity Used (kg/yr)	% Composition by Weight of Listed Substance in Raw Material (specify ± % precision)
Class I chemical	350.00	6.5% ± .5%
	N/A	N/A
Class II chemical		
Polymer		

[ ] Mark (X) this box if you attach a continuation sheet.

4.03 Submit a copy or reasonable facsimile of any hazard information (other than an MSDS) that is provided to your customers/users regarding the listed substance or any formulation containing the listed substance. Indicate whether this information has been submitted by circling the appropriate response.

Yes .....

No ..... (

4.04 For each activity that uses the listed substance, circle all the applicable number(s corresponding to each physical state of the listed substance during the activity listed. Physical states for importing and processing activities are determined at the time you import or begin to process the listed substance. Physical states for manufacturing, storage, disposal and transport activities are determined using the final state of the product.

CBI

[ ]

Activity	Physical State				
	Solid	Slurry	Liquid	Liquified Gas	Ga
Manufacture N/A	1	2	3	4	
Import N/A	1	2	3	4	
Process	1	2	3	4	
Store	1	2	3	4	
Dispose	1	2	3	4	
Transport	1	2	3	4	

[ ] Mark (X) this box if you attach a continuation sheet.

PART B FIRE, EXPLOSION, AND OTHER HAZARD DATA

4.06 For each physical state of the listed substance, specify the corresponding flashpoint, and the test method used to derive the flashpoint value.

Solid

Flashpoint ..... _____

Test method ..... _____

Liquid

Flashpoint ..... _____

Test method ..... _____

Gas/Vapor

Flashpoint ..... _____

Test method ..... _____

Indicate if hazard information/MSDS has been submitted in lieu of response by circling the appropriate response.

Yes .....

No .....

4.07 Indicate the temperature at which the listed substance undergoes autopolymerization or autodecomposition.

Autopolymerizes at ..... _____

Autodecomposes at ..... _____

Indicate if hazard information/MSDS has been submitted in lieu of response by circling the appropriate response.

Yes .....

No .....

[ ] Mark (X) this box if you attach a continuation sheet.

4.09 Extinguishing Media -- Identify (Y/N/NA/UK) all known methods for extinguishing flames caused by each product type which contains the listed substance. (Refer to the instructions for the definition of Y, N, NA and UK.)

Extinguishing Media	Product Types Containing the Listed Substanc					
	1	2	3	4	5	6
Water	___	___	___	___	___	___
Foam	___	___	___	___	___	___
CO_2	___	___	___	___	___	___
Dry chemical (e.g., sodium bicarbonate)	___	___	___	___	___	___
Halogenated hydrocarbon (e.g., carbon tetrachloride, methyl bromide)	___	___	___	___	___	___
Other (specify) _____	___	___	___	___	___	___

Indicate if hazard information/MSDS has been submitted in lieu of response by circling the appropriate response.

Yes .....

No .....

---

[1]Identify the product types listed under each column (1-6) in the following table:

Product Type No.	Product Type Identity
1	_____
2	_____
3	_____
4	_____
5	_____
6	_____

[ ] Mark (X) this box if you attach a continuation sheet.

4.11 Incompatibility -- List all chemicals, materials, or categories of chemicals or materials that you know are incompatible with the listed substance and the reason wh they are incompatible. (Refer to the instructions for further explanation and an example.)

CAS No.	Name	Reaction (specify)

Indicate if hazard information/MSDS has been submitted in lieu of response by circling the appropriate response.

Yes .....

No .....

4.12 Autoxidation -- Is the listed substance capable of autoxidation? Circle the appropriate response.

Yes .....

No .....

Unknown .....

Indicate if hazard information/MSDS has been submitted in lieu of response by circling the appropriate response.

Yes .....

No .....

[ ] Mark (X) this box if you attach a continuation sheet.

4.15 Shipment Procedures -- If you use an inhibitor or stabilizer when shipping the listed substance in bulk form, specify its name, whether it inhibits or stabilizes the listed substance, the amount normally added, and the duration of its effectiveness.

CBI

[ ]

Name of Additive	Inhibitor or Stabilizer[1]	Amount Normally Added (ppm or %)	Duration of Effectiveness (specify units)

Indicate if hazard information/MSDS has been submitted in lieu of response by circling the appropriate response.

Yes .....

No .....

[1]Use the following codes to designate inhibitor and stabilizer:

I = Inhibitor
S = Stabilizer

[ ] Mark (X) this box if you attach a continuation sheet.

PART B PARTITION COEFFICIENTS

5.02 a. Specify the half-life of the listed substance in the following media. UK

Media	Half-life (specify units)
Groundwater	UK
Atmosphere	UK
Surface water	UK
Soil	UK

b. Identify the listed substance's known transformation products that have a half-life greater than 24 hours. UK

CAS No.	Name	Half-life (specify units)		Media
			in	
			in	
			in	
			in	

5.03 UK Specify the octanol-water partition coefficient, K_{ow} ... UK at 25

Method of calculation or determination ..... _____

5.04 UK Specify the soil-water partition coefficient, K_d ..... UK at 25

Soil type ..... _____

5.05 UK Specify the organic carbon-water partition coefficient, K_{oc} ..... UK at 25

5.06 UK Specify the Henry's Law Constant, H ..... _____ atm-m^3/mo

[ ] Mark (X) this box if you attach a continuation sheet.

SECTION 6 ECONOMIC AND FINANCIAL INFORMATION

6.01 Company Type -- Circle the number which most appropriately describes your company.

CBI

[__]

Corporation 1

Sole proprietorship 2

Partnership 3

Other (specify) _____ 4

6.02 At the end of the reporting year, were you constructing additional facilities at this site that were not yet in operation at the end of the reporting year, but which are now being used or will be used in the future for manufacturing, importing, or processing the listed substance? Circle the appropriate response.

CBI

[__] Yes 1

No 2

6.03 List all of the product types that you manufacture that contain the listed substance as a raw material, and the percentage of the name-plate capacity dedicated to the listed substance that each product type represents. The total of all capacity percentiles should equal 100 percent. State the total name-plate capacity of the process type(s) used to manufacture all product types that contain the listed substance.

CBI

[__]

Product Type	% Total Capacity

State the total name-plate capacity of the process type(s) used to manufacture all product types that contain the listed substance: _____ kg/y

[__] Mark (X) this box if you attach a continuation sheet.

6.06 CBI [ ] State your average total and variable costs of manufacturing, importing, and processing the listed substance during the reporting year. (For an explanation of these costs, refer to the instructions.)

Average Total Costs

Manufacturing ..... _____ $/kg

Importing ..... _____ $/kg

Processing ..... _____ $/kg

Average Variable Costs

Manufacturing ..... _____ $/kg

Importing ..... _____ $/kg

Processing ..... _____ $/kg

6.07 State your average purchase price of the listed substance, if purchased as a raw material during the reporting year.

CBI

[ ] Average purchase price ..... _____ $/k

6.08 CBI State your company's total sales and sales of the listed substance sold in bulk for the reporting year.

[ ] Year ending ..... [ ][ ] Mo. [ ][ ] Year

Company's total sales ($) ..... _____

Sales of listed substance ($) ..... _____

[ ] Mark (X) this box if you attach a continuation sheet.

6.09 State your company's total sales and sales of the listed substance sold in bulk for the corporate fiscal year preceding the reporting year. (Refer to the instructions for question 6.08 for the methodology used to answer this question.)

CBI

[ ]

Year ending ..... [ ][ ] [ ][ ]
Mo. Year

Company's total sales ($) ..... _____

Sales of listed substance ($) ..... _____

6.10 State your company's total sales and sales of the listed substance sold in bulk for the 2 corporate fiscal years preceding the reporting year in descending order. (Refer to the instructions for question 6.08 for the methodology used to answer this question.)

CBI

[ ]

Year ending ..... [ ][ ] [ ][ ]
Mo. Year

Company's total sales ($) ..... _____

Sales of listed substance ($) ..... _____

Year ending ..... [ ][ ] [ ][ ]
Mo. Year

Company's total sales ($) ..... _____

Sales of listed substance ($) ..... _____

[ ] Mark (X) this box if you attach a continuation sheet.

7.02 In accordance with the instructions, provide a separate process block flow diagram showing each of the three major (greatest volume) process types involving the listed substance.

CBI

[ ] Process type ..... _____

[ ] Mark (X) this box if you attach a continuation sheet.

7.04 Describe the typical equipment types for each unit operation identified in your process block flow diagram(s). If a process block flow diagram is provided for more than one process type, photocopy this question and complete it separately for each process type.

CBI

[ ] Process type ..... Urethane Coating

Unit Operation ID Number	Typical Equipment Type	Operating Temperature Range (°C)	Operating Pressure Range (mm Hg)	Vessel Composition
7.1	container (beaker)	ambient	atmospheric	-
7.2	vacuum chamber	ambient	3	-
7.3	spray booth	ambient	atmospheric	-
7.4	needle	ambient	atmospheric	-

[ ] Mark (X) this box if you attach a continuation sheet.

7.06 Characterize each process stream identified in your process block flow diagram(s). If a process block flow diagram is provided for more than one process type, photocopy this question and complete it separately for each process type. (Refer to the instructions for further explanation and an example.)

CBI

[ ] Process type ..... Urethane Coating

a. Process Stream ID Code	b. Known Compounds[1]	c. Concentrations[2,3] (% or ppm)	d. Other Expected Compounds	e. Estimated Concentrations (% or ppm)
~~7A-H~~	Solithane 113	40 to 100%	N/A	N/A
	C113-300	60 to 0%	N/A	N/A
	Additives		N/A	N/A

7.06 continued below

NOTE: The above concentrations were determined using engineering calculations, measured by weight.

[ ] Mark (X) this box if you attach a continuation sheet.

SECTION 8 RESIDUAL TREATMENT GENERATION, CHARACTERIZATION, TRANSPORTATION, AND MANAGEMENT

General Instructions:

For questions 8.04-8.06, provide a separate response for each residual treatment block flow diagram provided in question 8.01, 8.02 or 8.03. Identify the process type from which the information is extracted.

For questions 8.05-8.33, the Stream Identification Codes are those process streams listed in either the Section 7 or Section 8 block flow diagrams which contain residuals for each applicable waste management method.

For questions 8.07-8.33, if residuals are combined before they are handled, list those Stream Identification Codes on the same line.

Questions 8.09-8.33 refer to the waste management activities involving the residuals identified in either the Section 7 or Section 8 block flow diagrams. Not all Stream Identification Codes used in the sample answers (e.g., for the incinerator questions) have corresponding process streams identified in the block flow diagram(s). These Stream Identification codes are for illustrative purposes only.

For questions 8.11-8.33, if you have provided the information requested on one of the EPA Office of Solid Waste surveys listed below within the three years prior to your reporting year, you may submit a copy or reasonable facsimile in lieu of answering those questions which the survey addresses. The applicable surveys are: (1) Hazardous Waste Treatment, Storage, Disposal, and Recycling Survey; (2) Hazardous Waste Generator Survey; or (3) Subtitle D Industrial Facility Mail Survey.

[ ] Mark (X) this box if you attach a continuation sheet.

8.02 In accordance with the instructions, provide residual treatment block flow diagram(s) which describe each of the treatment processes used for residuals identified in question 7.02.

CBI

[ ] Process type ..... _____

[ ] Mark (X) this box if you attach a continuation sheet.

8.04 Describe the typical equipment types for each unit operation identified in your residual treatment block flow diagram(s). If a residual treatment block flow diagram is provided for more than one process type, photocopy this question and complete it separately for each process type.

CBI

[ ] Process type ..... _____

Unit Operation ID Number (as assigned in questions 8.01, 8.02, or 8.03)	Typical Equipment Type

[ ] Mark (X) this box if you attach a continuation sheet.

8.05 (continued)

[1]Use the following codes to designate the type of hazardous waste:

I = Ignitable
C = Corrosive
R = Reactive
E = EP toxic
T = Toxic
H = Acutely hazardous

[2]Use the following codes to designate the physical state of the residual:

GC = Gas (condensible at ambient temperature and pressure)
GU = Gas (uncondensible at ambient temperature and pressure)
SO = Solid
SY = Sludge or slurry
AL = Aqueous liquid
OL = Organic liquid
IL = Immiscible liquid (specify phases, e.g., 90% water, 10% toluene)

8.05 continued below

[ ] Mark (X) this box if you attach a continuation sheet.

8.05 (continued)

[5]Use the following codes to designate how the concentration was measured:

V = Volume
W = Weight

[6]Specify the analytical test methods used and their detection limits in the table below. Assign a code to each test method used and list those codes in column e.

Code	Method	Detection Limi (± ug/l)
1	NA	NA
2		
3		
4		
5		
6		

[ ] Mark (X) this box if you attach a continuation sheet.

EXHIBIT 8-1.
(Refers to question 8.06(b))

WASTE DESCRIPTION CODES

These waste description codes were developed specifically for this survey to supplement the descriptions listed with the RCRA and other waste codes. (These waste description codes are not regulatory definitions.)

WASTE DESCRIPTION CODES FOR HAZARDOUS WASTE DESCRIBED BY A SINGLE RCRA F, K, P, OR U WASTE CODE

A01 Spent solvent (F001-F005, K086)
A02 Other organic liquid (F001-F005, K086)
A03 Still bottom (F001-F005, K086)
A04 Other organic sludge (F001-F005, K086)
A05 Wastewater or aqueous mixture
A06 Contaminated soil or cleanup residue
A07 Other F or K waste, exactly as described*
A08 Concentrated off-spec or discarded product
A09 Empty containers
A10 Incinerator ash
A11 Solidified treatment residue
A12 Other treatment residue (specify in "Facility Notes")
A13 Other untreated waste (specify in "Facility Notes")

*"Exactly as described" means that the waste matches the description of the RCRA waste code.

INORGANIC LIQUIDS—Waste that is primarily inorganic and highly fluid (e.g., aqueous), with low suspended inorganic solids and low organic content.

B01 Aqueous waste with low solvents
B02 Aqueous waste with low other toxic organics
B03 Spent acid with metals
B04 Spent acid without metals
B05 Acidic aqueous waste
B06 Caustic solution with metals but no cyanides
B07 Caustic solution with metals and cyanides
B08 Caustic solution with cyanides but no metals
B09 Spent caustic
B10 Caustic aqueous waste
B11 Aqueous waste with reactive sulfides
B12 Aqueous waste with other reactives (e.g., explosives)
B13 Other aqueous waste with high dissolved solids
B14 Other aqueous waste with low dissolved solids
B15 Scrubber water
B16 Leachate
B17 Waste liquid mercury
B18 Other inorganic liquid (specify in "Facility Notes")

INORGANIC SLUDGES—Waste that is primarily inorganic, with moderate-to-high water content and low organic content; pumpable.

B19 Lime sludge without metals
B20 Lime sludge with metals/metal hydroxide sludge
B21 Wastewater treatment sludge with toxic organics
B22 Other wastewater treatment sludge
B23 Untreated plating sludge without cyanides
B24 Untreated plating sludge with cyanides
B25 Other sludge with cyanides
B26 Sludge with reactive sulfides
B27 Sludge with other reactives
B28 Degreasing sludge with metal scale or filings
B29 Air pollution control device sludge (e.g., fly ash, wet scrubber sludge)
B30 Sediment or lagoon dragout contaminated with organics
B31 Sediment or lagoon dragout contaminated with inorganics only
B32 Drilling mud
B33 Asbestos slurry or sludge
B34 Chloride or other brine sludge
B35 Other inorganic sludge (specify in "Facility Notes")

INORGANIC SOLIDS—Waste that is primarily inorganic and solid, with low organic content and low-to-moderate water content; not pumpable.

B36 Soil contaminated with organics
B37 Soil contaminated with inorganics only
B38 Ash, slag, or other residue from incineration of wastes
B39 Other "dry" ash, slag, or thermal residue
B40 "Dry" lime or metal hydroxide solids chemically "fixed"
B41 "Dry" lime or metal hydroxide solids not "fixed"
B42 Metal scale, filings, or scrap
B43 Empty or crushed metal drums or containers
B44 Batteries or battery parts, casings, cores
B45 Spent solid filters or adsorbents
B46 Asbestos solids and debris
B47 Metal-cyanide salts/chemicals
B48 Reactive cyanide salts/chemicals
B49 Reactive sulfide salts/chemicals
B50 Other reactive salts/chemicals
B51 Other metal salts/chemicals
B52 Other waste inorganic chemicals
B53 Lab packs of old chemicals only
B54 Lab packs of debris only
B55 Mixed lab packs
B56 Other inorganic solids (specify in "Facility Notes")

INORGANIC GASES—Waste that is primarily inorganic with a low organic content and is a gas at atmospheric pressure.

B57 Inorganic gases

ORGANIC LIQUIDS—Waste that is primarily organic and is highly fluid, with low inorganic solids content and low-to-moderate water content.

B58 Concentrated solvent-water solution
B59 Halogenated (e.g., chlorinated) solvent
B60 Nonhalogenated solvent
B61 Halogenated/nonhalogenated solvent mixture
B62 Oil-water emulsion or mixture
B63 Waste oil
B64 Concentrated aqueous solution of other organics
B65 Concentrated phenolics
B66 Organic paint, ink, lacquer, or varnish
B67 Adhesives or epoxies
B68 Paint thinner or petroleum distillates
B69 Reactive or polymerizable organic liquid
B70 Other organic liquid (specify in "Facility Notes")

ORGANIC SLUDGES—Waste that is primarily organic, with low-to-moderate inorganic solids content and water content; pumpable.

B71 Still bottoms of halogenated (e.g., chlorinated) solvents or other organic liquids
B72 Still bottoms of nonhalogenated solvents or other organic liquids
B73 Oily sludge
B74 Organic paint or ink sludge
B75 Reactive or polymerizable organics
B76 Resins, tars, or tarry sludge
B77 Biological treatment sludge
B78 Sewage or other untreated biological sludge
B79 Other organic sludge (specify in "Facility Notes")

ORGANIC SOLIDS—Waste that is primarily organic and solid, with low-to-moderate inorganic content and water content; not pumpable.

B80 Halogenated pesticide solid
B81 Nonhalogenated pesticide solid
B82 Solid resins or polymerized organics
B83 Spent carbon
B84 Reactive organic solid
B85 Empty fiber or plastic containers
B86 Lab packs of old chemicals only
B87 Lab packs of debris only
B88 Mixed lab packs
B89 Other halogenated organic solid
B90 Other nonhalogenated organic solid

ORGANIC GASES—Waste that is primarily organic with low-to-moderate inorganic content and is a gas at atmospheric pressure.

B91 Organic gases

EXHIBIT 8-2. (continued)

MANAGEMENT METHODS

17WT Ferrous sulfate
18WT Other chromium reduction

Complexed metals treatment (other than chemical precipitation by pH adjustment)
19WT Complexed metals treatment

Emulsion breaking
20WT Thermal
21WT Chemical
22WT Other emulsion breaking

Adsorption
23WT Carbon adsorption
24WT Ion exchange
25WT Resin adsorption
26WT Other adsorption

Stripping
27WT Air stripping
28WT Steam stripping
29WT Other stripping

Evaporation
30WT Thermal
31WT Solar
32WT Vapor recompression
33WT Other evaporation

Filtration
34WT Diatomaceous earth
35WT Sand
36WT Multimedia
37WT Other filtration

Sludge devatering
38WT Gravity thickening
39WT Vacuum filtration
40WT Pressure filtration (belt, plate and frame, or leaf)
41WT Centrifuge
42WT Other sludge devatering

Air flotation
43WT Dissolved air flotation
44WT Partial aeration
45WT Air dispersion
46WT Other air flotation

Oil skimming
47WT Gravity separation
48WT Coalescing plate separation
49WT Other oil skimming

Other liquid phase separation
50WT Decanting
51WT Other liquid phase separation

Biological treatment
52WT Activated sludge
53WT Fixed film-trickling filter
54WT Fixed film-rotating contactor
55WT Lagoon or basin, aerated
56WT Lagoon, facultative
57WT Anaerobic
58WT Other biological treatment

Other vastewater treatment
59WT Wet air oxidation
60WT Neutralization
61WT Nitrification
62WT Denitrification
63WT Flocculation and/or coagulation
64WT Settling (clarification)
65WT Reverse osmosis
66WT Other vastewater treatment

OTHER VASTE TREATMENT

1TR Other treatment
2TR Other recovery for reuse

ACCUMULATION

1A Containers
2A Tanks

STORAGE

1ST Container (i.e., barrel, drum)
2ST Tank
3ST Waste pile
4ST Surface impoundment
5ST Other storage

DISPOSAL

1D Landfill
2D Land treatment
3D Surface impoundment (to be closed as a landfill)
4D Underground injection well

---

[1]Chemical precipitation is a treatment operation whereby the pH of a vaste is adjusted to the range necessary for removal (precipitation) of contaminants. However, if the pH is adjusted solely to achieve a neutral pH, THE OPERATION SHOULD BE CONSIDERED NEUTRALIZATION (60WT).

8.09 Identify each off-site facility (including POTWs) that manages the residuals identified in your process block or residual treatment block flow diagram(s), and the quantity that each managed during the reporting year. Photocopy this question and complete it separately for each off-site facility.

CBI

[_]

Stream ID Code	Annual Quantity (kg)
________	________
________	________
________	________
________	________
________	________
________	________
________	________
________	________
________	________
________	________

Facility Name [_]

Address [_]
Street

[_]
City

[_][_] State [_][_][_][_][_]--[_][_][_][_] Zip Code

EPA Identification Number (i.e., Hazardous Waste Facility ID Number) .... [_][_][_][_][_][_][_][_][_][_][_][_]

[_] Mark (X) this box if you attach a continuation sheet.

8.11 On-Site Storage or Treatment in Piles -- Complete this table for the five largest (by volume) piles that are used on-site to store or treat the residuals identified in your process block or residual treatment block flow diagram(s).

CBI

[ ]

Pile	Quantity Managed per Year (cubic meters)	Under Roofed Structure (Y/N)	Type of Containment Provided[1]	Synthetic Liner Base (Y/N)[2]	Frequency of Transfer and/or Handling Operations[3]	Stream ID Code
1						
2						
3						
4						
5						

Indicate if Office of Solid Waste survey has been submitted in lieu of respons by circling the appropriate response.

Yes .....

No .....

---

[1]Use the following codes to designate the type of containment provided:

C = Complete (includes both dike containment and underground (leachate) containment)
P1 = Partial-1 (includes just dike containment)
P2 = Partial-2 (includes just underground (leachate) containment)
N = None

[2]Waste may lie directly on the synthetic liner or the liner may be covered with a clay layer

[3]Use the following codes to designate frequency of transfer and/or handling operations:

A = Daily
B = Weekly
C = Monthly
D = Other (specify) _____

[ ] Mark (X) this box if you attach a continuation sheet.

8.13 On-Site Storage, Treatment, or Disposal in Containers -- Complete the following table for the five largest (by volume) types of free standing containers that are used on-site to store, treat, or dispose of the residuals identified in your process block or residual treatment block flow diagram(s).

CBI

[ ]

Container	Design Capacity (liters)	Quantity Stored per Year (liters)	Treat-ment Types[1]	Average Length of Storage (days)	Average Daily Stored Quantity (liters)	Maximum Operational Storage Capacity (liters)	Storage Base Material[2]	Stream ID Code
1								
2								
3								
4								
5								

Indicate if Office of Solid Waste survey has been submitted in lieu of response by circling the appropriate response.

Yes 1

No 2

[1]Indicate "S" for storage and use the codes provided in Exhibit 8-3 to designate treatment types

If residual is stored, indicate (Y/N) in parenthesis whether the storage area is designed and operated to collect and contain surface runoff

[2]Use the following codes to designate storage base materials:

A = Concrete
B = Asphalt
C = Soil
D = Other (specify) _____

[ ] Mark (X) this box if you attach a continuation sheet.

8.14 On-Site Burning in Boilers -- Complete the following table for the five largest (by capacity) boilers that are used on-site to burn the residuals identified in your process block or residual treatment block flow diagram(s).

CBI

[ ]

Boiler	Boiler Type[1]	Average Boiler Load[2] (%)	Average Fuel Replacement Ratio[3] (%)	Stream ID Code
1				
2				
3				
4				
5				

Indicate if Office of Solid Waste survey has been submitted in lieu of response by circling the appropriate response.

Yes 1

No 2

---

[1]Use the following codes to designate boiler type:

F = Fire tube
W = Water tube

[2]Designate the average boiler load when firing residual (percent of capacity)

[3]Designate the average fuel replacement ratio as a percentage (heat-input basis)

[ ] Mark (X) this box if you attach a continuation sheet.

8.16 Provide the following information for the residuals identified in your process block or residual treatment block flow diagram(s) that are burned in on-site boilers. Photocopy this question and complete it separately for each boiler.

CBI

[ ] Boiler number ..... _____

Stream ID code(s) ..... _____

	Residual, as Fired (or residual mixture if residuals are blended)	Boiler Fuel, as Fired (residual(s) plus primary fuel)
Btu content (J/kg)		
Average	_____	_____
Minimum	_____	_____
Total halogen content (% by wt.)		
Average	_____	_____
Maximum	_____	_____

Indicate if Office of Solid Waste survey has been submitted in lieu of respons by circling the appropriate response.

Yes .....

No .....

[ ] Mark (X) this box if you attach a continuation sheet.

8.18 Complete the following table for the five largest (by capacity) boilers that are used on-site to burn the residuals identified in your process block or residual treatment block flow diagram(s).

CBI

[ ]

Boiler	Air Pollution Control Device[1]	Types of Emissions Data Available
1		
2		
3		
4		
5		

Indicate if Office of Solid Waste survey has been submitted in lieu of response by circling the appropriate response.

Yes .....

No .....

---

[1]Use the following codes to designate the air pollution control device:

S = Scrubber (include type of scrubber in parenthesis)
E = Electrostatic precipitator
O = Other (specify) _____

[ ] Mark (X) this box if you attach a continuation sheet.

8.20 On-Site Burning in Incinerators -- Complete the following table for the three largest (by capacity) incinerators that are used on-site to burn the residuals identified in your process block or residual treatment block flow diagram(s).

CBI

[ ]

Incinerator	Incinerator Type[1]	Primary Incinerator Fuel[2]	Average Fuel Replacement Ratio[3]	Stream ID Code
1				
2				
3				

Indicate if Office of Solid Waste survey has been submitted in lieu of response by circling the appropriate response.

Yes .....

No .....

---

[1]Use the following codes to designate the incinerator type:

1I = Liquid injection
2I = Rotary or rocking kiln
3I = Rotary kiln with a liquid injection unit
4I = Two stage
5I = Fixed hearth
6I = Multiple hearth
7I = Fluidized bed
8I = Infrared
9I = Fume/vapor
10I = Pyrolytic destructor
11I = Other (specify) _____

[2]Use the following codes to designate the primary incinerator fuel:

A = Oil
B = Gas
C = Coal
D = Wood
E = Other (specify) _____

[3]Designate the percentage of auxiliary fuel used when firing residual (percent of capacity)

[ ] Mark (X) this box if you attach a continuation sheet.

8.21 Complete the following table for the three largest (by capacity) incinerators that are used on-site to burn the residuals identified in your process block or residual treatment block flow diagram(s).

CBI

[ ]

Incinerator	Incinerator Heat Capacity (heat input in kJ/hr)	Feed Type[1]
1		
2		
3		

Indicate if Office of Solid Waste survey has been submitted in lieu of response by circling the appropriate response.

Yes .....

No .....

[1]Use the following codes to designate feed type:

A = Liquid nozzle type (specify) _____
B = Atomizing pressure (specify) _____
C = Solid-batch charge
D = Solid-continuous charge

[ ] Mark (X) this box if you attach a continuation sheet.

8.25

8.24 Stack Parameters -- Provide the following information on stack parameters for three largest (by capacity) incinerators that are used on-site to burn the residuals identified in your process block or residual treatment block flow diagram(s).

CBI Photocopy this question and complete it separately for each incinerator.

[ ] Incinerator number ..... NA

Stack height	NA	m
Stack inner diameter (at outlet)	NA	m
Exhaust temperature	NA	°C
Vertical or horizontal stack	NA	(V or H)
Annual emissions for the listed substance	NA	kg/yr
Height of attached or adjacent building	NA	m
Width of attached or adjacent building	NA	m
Building cross-sectional area	NA	m^2
Emission exit velocity	NA	m/sec
Average emission rate of exit stream	NA	kg/min
Maximum emission rate of exit stream	NA	kg/min
Average duration of maximum emission rate of exit stream .	NA	min
Frequency of maximum emission rate of exit stream	NA	times/yea

Indicate if Office of Solid Waste survey has been submitted in lieu of respons by circling the appropriate response.

Yes .....

(No) .....

[ ] Mark (X) this box if you attach a continuation sheet.

8.25 Provide the following information on the incinerator feed for the three largest (by capacity) incinerators that are used on-site to burn the residuals identified in you process block or residual treatment block flow diagram(s). Photocopy this question and complete it separately for each incinerator.

CBI

[ ] Incinerator number ..... _____

Stream ID code(s) ..... _____

	Residual, as Fired (or residual mixture if residuals are blended)	Incinerator Fue as Fired (residual(s) pl primary fuel)
Btu content (J/kg)		
Average	_____	_____
Minimum	_____	_____
Feed rate (kg/hr)	_____	_____
Feed rate (J/hr)(kg/hr x J/kg)	_____	_____
Total halogen content (% by weight)		
Average	_____	_____
Maximum	_____	_____
Total ash content (% by weight)		
Average	_____	_____
Maximum	_____	_____
Total water content (% by weight)		
Average	_____	_____
Maximum	_____	_____

Indicate if Office of Solid Waste survey has been submitted in lieu of respo by circling the appropriate response.

Yes .....

No .....

[ ] Mark (X) this box if you attach a continuation sheet.

8.27 On-Site Storage, Treatment or Disposal in a Land Treatment Site -- Complete the following table for each on-site land treatment site that is used to store, treat, o dispose of the residuals identified in your process block or residual treatment bloc flow diagram(s).

CBI

[ ] Total area actively used for land treatment ..... _____ m

Average slope of site (degree incline) ..... _____

Surface water runoff management[1] ..... _____

Indicate if Office of Solid Waste survey has been submitted in lieu of respons by circling the appropriate response.

Yes .....

No .....

---

[1]Use the following codes to describe the management practices for surface water runoff:

A = Collection prior to treatment
B = Reapplication to the site
C = Canalization prior to treatment
D = Other (specify) _____

[ ] Mark (X) this box if you attach a continuation sheet.

8.29 On-Site Storage, Treatment, or Disposal in Surface Impoundments -- Complete the following table for the five largest (by volume) surface impoundments that are used on-site to treat, store, or dispose of the residuals identified in your process block or residual treatment block flow diagram(s).

CBI

[ ]

Impoundment	Total Capacity (liters)	Specify Storage, Disposal or Treatment Type if Applicable[1]	Average Residency Time (days)[2]	SYNTHETIC LINER		CLAY LINER		LEACHATE COLLECTION SYSTEM		Stream ID Code
				No. of Liners	Thickness (cm)[3]	No. of Liners	Thickness (cm)[3]	Installed (Y/N)	Leachate Collected (Y/N)	
1										
2										
3										
4										
5										

Indicate if Office of Solid Waste survey has been submitted in lieu of response by circling the appropriate response.

Yes 1

No 2

[1]Indicate "S" for storage, "D" for disposal, or use the codes provided in Exhibit 8-3 (which follows question 8.13) to designate treatment type

[2]Indicate the residency time for the surface impoundment's flow through stream. In addition, indicate in parenthesis using the following codes the frequency with which the impoundment is dredged to clear the residue that collects on the bottom:

A = Daily
B = Weekly
C = Monthly
D = Other (specify) _____

[3]Indicate the thickness of each liner

[ ] Mark (X) this box if you attach a continuation sheet.

8.30 On-Site Disposal in Landfill Cells -- Complete the following table for the five largest (by volume) landfill cells that are used on-site to dispose of the residuals identified in your process block or residual treatment block flow diagram(s).

CBI

[ ]

Landfi Ce	Quantity per year (kg)	DRAINAGE LAYER Installed (Y/N)	DRAINAGE LAYER Thickne s (cm)	CLAY LINER No. of Liners	CLAY LINER Thi s (	SYNTHETIC LINER No. of Liners	SYNTHETIC LINER Material	SYNTHETIC LINER Thickness m)[1]	Stream ID Code
2									
3									
4									
5									

Indicate if Office of Solid Waste survey has been submitted in lieu of response by circling the appropriate response.

Yes 1

No 2

[1]Indicate the thickness of each liner

[ ] Mark (X) this box if you attach a continuation sheet.

8.33 On-Site Disposal in Injection Wells -- Complete the following table for the five largest (by volume) injection wells that are used on-site to dispose of the residuals identified in your process block or residual treatment block flow diagram(s).

CBI

[ ]

Well	Well Type[1]	Quantity Disposed (liters)[2]	Stream ID Code
1			
2			
3			
4			
5			

Indicate if Office of Solid Waste survey has been submitted in lieu of response by circling the appropriate response.

Yes 1

No 2

---

[1]Use the following codes to designate well type:

A = Wells that dispose below deepest groundwater with <10,000 mg/l of total dissolved solids
B = Wells that dispose into a formation containing groundwater with <10,000 mg/l total dissolved solids
C = Wells that dispose above all groundwater
D = Other (specify) _____

[2]Indicate the quantity of listed substance disposed

[ ] Mark (X) this box if you attach a continuation sheet.

SECTION 9 WORKER EXPOSURE

General Instructions:

Questions 9.03-9.25 apply only to those processes and workers involved in manufacturing or processing the listed substance. Do not include workers involved in residual waste treatment unless they are involved in this treatment process on a regular basis (i.e., exclude maintenance workers, construction workers, etc.).

[ ] Mark (X) this box if you attach a continuation sheet.

9.02 In accordance with the instructions, complete the following table for each activity in which you engage.

CBI

[ ]

a. Activity	b. Process Category	c. Yearly Quantity (kg)	d. Total Workers	e. Total Worker-Hours
Manufacture of the listed substance	Enclosed	N/A	N/A	N/A
	Controlled Release	N/A	N/A	N/A
	Open	N/A	N/A	N/A
On-site use as reactant	Enclosed	N/A	N/A	N/A
	Controlled Release	N/A	N/A	N/A
	Open	3-4 *	1	100
On-site use as nonreactant	Enclosed	N/A	N/A	N/A
	Controlled Release	N/A	N/A	N/A
	Open	N/A	N/A	N/A
On-site preparation of products	Enclosed	N/A	N/A	N/A
	Controlled Release	N/A	N/A	N/A
	Open	N/A	N/A	N/A

* of a 6-7% concentration of TDI

[X] Mark (X) this box if you attach a continuation sheet.

9.02 In accordance with the instructions, complete the following table for each activity in which you engage.

CBI

[ ]

a. Activity	b. Process Category	c. Yearly Quantity (kg)	d. Total Workers	e. Total Worker-Hours
Manufacture of the listed substance	Enclosed	N/A	N/A	N/A
	Controlled Release	N/A	N/A	N/A
	Open	N/A	N/A	N/A
On-site use as reactant	Enclosed	N/A	N/A	N/A
	Controlled Release	N/A	N/A	N/A
	Open	50*	46	16,000
On-site use as nonreactant	Enclosed	N/A	N/A	N/A
	Controlled Release	N/A	N/A	N/A
	Open	N/A	N/A	N/A
On-site preparation of products	Enclosed	N/A	N/A	N/A
	Controlled Release	N/A	N/A	N/A
	Open	N/A	N/A	N/A

* of a 6-7% concentration of TDI

[X] Mark (X) this box if you attach a continuation sheet.

9.02 In accordance with the instructions, complete the following table for each activity in which you engage.

CBI

[ ]

a. Activity	b. Process Category	c. Yearly Quantity (kg)	d. Total Workers	e. Total Worker-Hours
Manufacture of the listed substance	Enclosed	N/A	N/A	N/A
	Controlled Release	N/A	N/A	N/A
	Open	N/A	N/A	N/A
On-site use as reactant	Enclosed	N/A	N/A	N/A
	Controlled Release	N/A	N/A	N/A
	Open	2*	24	19,750
On-site use as nonreactant	Enclosed	N/A	N/A	N/A
	Controlled Release	N/A	N/A	N/A
	Open	N/A	N/A	N/A
On-site preparation of products	Enclosed	N/A	N/A	N/A
	Controlled Release	N/A	N/A	N/A
	Open	N/A	N/A	N/A

* of a 6-7% concentration of TDI

[X] Mark (X) this box if you attach a continuation sheet.

9.02 In accordance with the instructions, complete the following table for each activity in which you engage.

CBI

[ ]

a. Activity	b. Process Category	c. Yearly Quantity (kg)	d. Total Workers	e. Total Worker-Hours
Manufacture of the listed substance	Enclosed	N/A	N/A	N/A
	Controlled Release	N/A	N/A	N/A
	Open	N/A	N/A	N/A
On-site use as reactant	Enclosed	N/A	N/A	N/A
	Controlled Release	N/A	N/A	N/A
	Open	24*	9	1,350
On-site use as nonreactant	Enclosed	N/A	N/A	N/A
	Controlled Release	N/A	N/A	N/A
	Open	N/A	N/A	N/A
On-site preparation of products	Enclosed	N/A	N/A	N/A
	Controlled Release	N/A	N/A	N/A
	Open	N/A	N/A	N/A

* of a 6-7% concentration of TDI

[X] Mark (X) this box if you attach a continuation sheet.

9.02 In accordance with the instructions, complete the following table for each activity in which you engage.

CBI

[ ]

a. Activity	b. Process Category	c. Yearly Quantity (kg)	d. Total Workers	e. Total Worker-Hours
Manufacture of the listed substance	Enclosed	N/A	N/A	N/A
	Controlled Release	N/A	N/A	N/A
	Open	N/A	N/A	N/A
On-site use as reactant	Enclosed	N/A	N/A	N/A
	Controlled Release	N/A	N/A	N/A
	Open	N/A	N/A	N/A
On-site use as nonreactant	Enclosed	N/A	N/A	N/A
	Controlled Release	N/A	N/A	N/A
	Open	N/A	N/A	N/A
On-site preparation of products	Enclosed	N/A	N/A	N/A
	Controlled Release	N/A	N/A	N/A
	Open	250 *	4	1,460

* of a 6 to 7% concentration of TDI

[X] Mark (X) this box if you attach a continuation sheet.

9.04 **In accordance with the instructions, provide your process block flow diagram(s) and indicate associated work areas.**

CBI

[ ] **Process type .....** Mixing and Component Fabrication

Work Area 2 - Development Laboratory

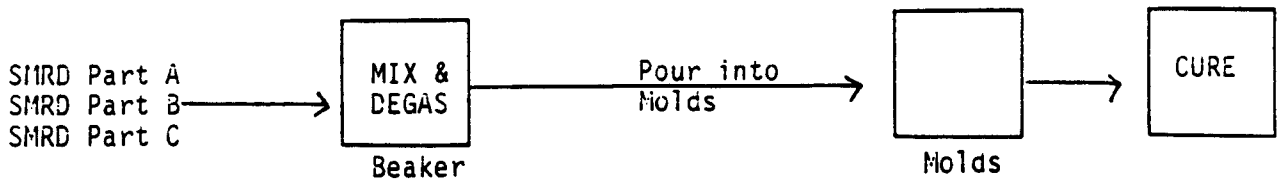

[X] **Mark (X) this box if you attach a continuation sheet.**

9.04 **In accordance with the instructions, provide your process block flow diagram(s) and indicate associated work areas.**

CBI

[ ] **Process type .....** Mixing and Application to Electronic Components

Work Area 3 - Electronics Shop

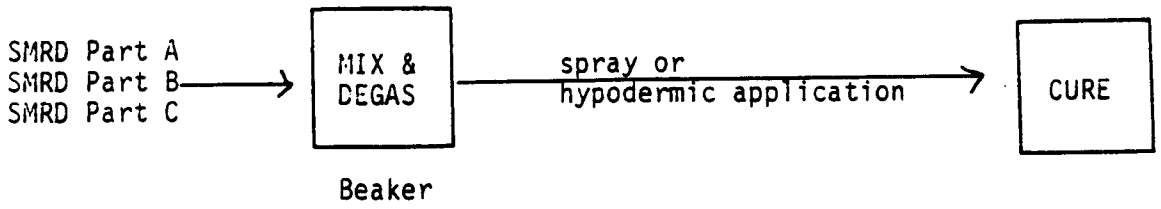

[X] **Mark (X) this box if you attach a continuation sheet.**

9.04 **In accordance with the instructions, provide your process block flow diagram(s) and indicate associated work areas.**

CBI

[ ] **Process type .....** Application to Spacecraft Components

Work Area 4 - PreAssembly

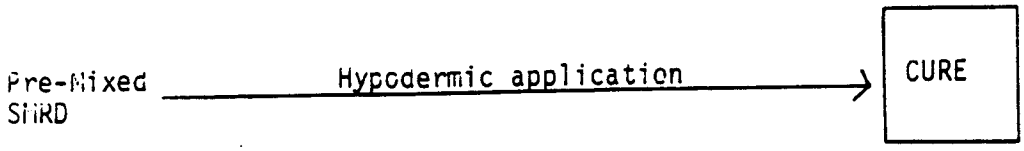

[ ] **Mark (X) this box if you attach a continuation sheet.**

9.04 **In accordance with the instructions, provide your process block flow diagram(s) and indicate associated work areas.**

CBI

[ ] **Process type .....** Mixing and application to spacecraft

Work Area 5 - Final Assembly

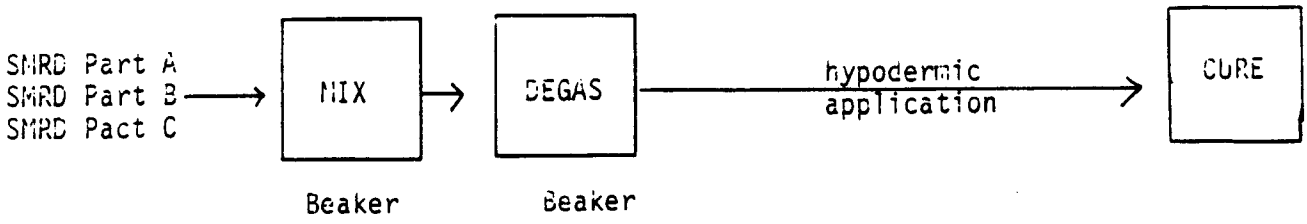

[ ] **Mark (X) this box if you attach a continuation sheet.**

9.04 In accordance with the instructions, provide your process block flow diagram(s) and indicate associated work areas.

CBI

[ ] Process type ..... Mixing and Kit Preparation

Work Area 1 - Materials Engineering Lab

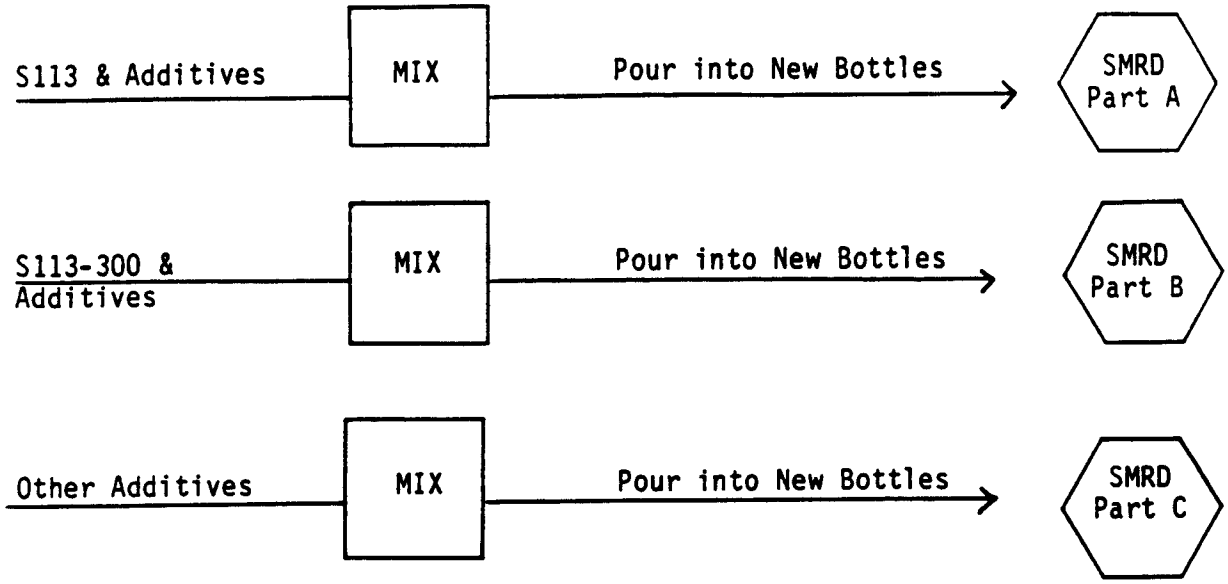

[X] Mark (X) this box if you attach a continuation sheet.

9.06 Complete the following table for each work area identified in question 9.05, and for each labor category at your facility that encompasses workers who may potentially come in contact with or be exposed to the listed substance. Photocopy this question and complete it separately for each process type and work area.

CBI

[ ] Process type ..... Mixing and Kit Preparation

Work area ..... Materials Engineering Lab

Labor Category	Number of Workers Exposed	Mode of Exposure (e.g., direct skin contact)	Physical State of Listed Substance[1]	Average Length of Exposure Per Day[2]	Number of Days per Year Exposed
B	2	direct skin contact	OL	D	100
C	1	direct skin contact	OL	D	100
A	1	direct skin contact	OL	A	100

[1]Use the following codes to designate the physical state of the listed substance at the point of exposure:

GC = Gas (condensible at ambient temperature and pressure)
GU = Gas (uncondensible at ambient temperature and pressure; includes fumes, vapors, etc.)
SO = Solid
SY = Sludge or slurry
AL = Aqueous liquid
OL = Organic liquid
IL = Immiscible liquid (specify phases, e.g., 90% water, 10% toluene)

[2]Use the following codes to designate average length of exposure per day:

A = 15 minutes or less
B = Greater than 15 minutes, but not exceeding 1 hour
C = Greater than one hour, but not exceeding 2 hours
D = Greater than 2 hours, but not exceeding 4 hours
E = Greater than 4 hours, but not exceeding 8 hours
F = Greater than 8 hours

[ ] Mark (X) this box if you attach a continuation sheet.

9.06 Complete the following table for each work area identified in question 9.05, and for each labor category at your facility that encompasses workers who may potentially come in contact with or be exposed to the listed substance. Photocopy this question and complete it separately for each process type and work area.

CBI

[ ] Process type ..... Component Fabrication

Work area ..... Development Lab

Labor Category	Number of Workers Exposed	Mode of Exposure (e.g., direct skin contact)	Physical State of Listed Substance[1]	Average Length of Exposure Per Day[2]	Number of Days per Year Exposed
D	1	skin contact	OL	A	12
E	3	skin contact	OL	A	12
E	1	skin contact	OL	C	12

[1]Use the following codes to designate the physical state of the listed substance at the point of exposure:

GC = Gas (condensible at ambient temperature and pressure)
GU = Gas (uncondensible at ambient temperature and pressure; includes fumes, vapors, etc.)
SO = Solid
SY = Sludge or slurry
AL = Aqueous liquid
OL = Organic liquid
IL = Immiscible liquid (specify phases, e.g., 90% water, 10% toluene)

[2]Use the following codes to designate average length of exposure per day:

A = 15 minutes or less
B = Greater than 15 minutes, but not exceeding 1 hour
C = Greater than one hour, but not exceeding 2 hours
D = Greater than 2 hours, but not exceeding 4 hours
E = Greater than 4 hours, but not exceeding 8 hours
F = Greater than 8 hours

[ ] Mark (X) this box if you attach a continuation sheet.

9.06 Complete the following table for each work area identified in question 9.05, and for each labor category at your facility that encompasses workers who may potentially come in contact with or be exposed to the listed substance. Photocopy this question and complete it separately for each process type and work area.

CBI

[ ] Process type ..... Mixing and Application to Electronic Components

Work area ..... Electronics Shop

Labor Category	Number of Workers Exposed	Mode of Exposure (e.g., direct skin contact)	Physical State of Listed Substance[1]	Average Length of Exposure Per Day[2]	Number of Days per Year Exposed
D	1	skin contact	OL	B	250
H&I	38	skin contact	OL	B	250
F	2	skin contact	OL	E	250
G	6	skin contact	OL	A	250

[1]Use the following codes to designate the physical state of the listed substance at the point of exposure:

GC = Gas (condensible at ambient temperature and pressure)
GU = Gas (uncondensible at ambient temperature and pressure; includes fumes, vapors, etc.)
SO = Solid
SY = Sludge or slurry
AL = Aqueous liquid
OL = Organic liquid
IL = Immiscible liquid (specify phases, e.g., 90% water, 10% toluene)

[2]Use the following codes to designate average length of exposure per day:

A = 15 minutes or less
B = Greater than 15 minutes, but not exceeding 1 hour
C = Greater than one hour, but not exceeding 2 hours
D = Greater than 2 hours, but not exceeding 4 hours
E = Greater than 4 hours, but not exceeding 8 hours
F = Greater than 8 hours

[ ] Mark (X) this box if you attach a continuation sheet.

9.06 Complete the following table for each work area identified in question 9.05, and for each labor category at your facility that encompasses workers who may potentially come in contact with or be exposed to the listed substance. Photocopy this question and complete it separately for each process type and work area.

CBI

[ ] Process type ..... Application to Spacecraft Components

Work area ..... PreAssembly Shop

Labor Category	Number of Workers Exposed	Mode of Exposure (e.g., direct skin contact)	Physical State of Listed Substance[1]	Average Length of Exposure Per Day[2]	Number of Days per Year Exposed
D	1	skin contact	OL	A	150
L	12	skin contact	OL	B	150
K	3	skin contact	OL	A	150
M	2	skin contact	OL	E	300
N	7	skin contact	OL	C	150

[1]Use the following codes to designate the physical state of the listed substance at the point of exposure:

GC = Gas (condensible at ambient temperature and pressure)
GU = Gas (uncondensible at ambient temperature and pressure; includes fumes, vapors, etc.)
SO = Solid
SY = Sludge or slurry
AL = Aqueous liquid
OL = Organic liquid
IL = Immiscible liquid (specify phases, e.g., 90% water, 10% toluene)

[2]Use the following codes to designate average length of exposure per day:

A = 15 minutes or less
B = Greater than 15 minutes, but not exceeding 1 hour
C = Greater than one hour, but not exceeding 2 hours
D = Greater than 2 hours, but not exceeding 4 hours
E = Greater than 4 hours, but not exceeding 8 hours
F = Greater than 8 hours

[ ] Mark (X) this box if you attach a continuation sheet.

9.06 Complete the following table for each work area identified in question 9.05, and for each labor category at your facility that encompasses workers who may potentially come in contact with or be exposed to the listed substance. Photocopy this question and complete it separately for each process type and work area.

CBI

[ ] Process type ..... Mixing and application to spacecraft

Work area ..... Final Assembly

Labor Category	Number of Workers Exposed	Mode of Exposure (e.g., direct skin contact)	Physical State of Listed Substance[1]	Average Length of Exposure Per Day[2]	Number of Days per Year Exposed
D	2	skin contact	OL	E	250
O	1	skin contact	OL	E	250
P	27	skin contact	OL	E	250
Q	3	skin contact	OL	E	250
R	3	skin contact	OL	E	250

[1]Use the following codes to designate the physical state of the listed substance at the point of exposure:

GC = Gas (condensible at ambient temperature and pressure)
GU = Gas (uncondensible at ambient temperature and pressure; includes fumes, vapors, etc.)
SO = Solid
SY = Sludge or slurry
AL = Aqueous liquid
OL = Organic liquid
IL = Immiscible liquid (specify phases, e.g., 90% water, 10% toluene)

[2]Use the following codes to designate average length of exposure per day:

A = 15 minutes or less
B = Greater than 15 minutes, but not exceeding 1 hour
C = Greater than one hour, but not exceeding 2 hours
D = Greater than 2 hours, but not exceeding 4 hours
E = Greater than 4 hours, but not exceeding 8 hours
F = Greater than 8 hours

[ ] Mark (X) this box if you attach a continuation sheet.

9.07 For each labor category represented in question 9.06, indicate the 8-hour Time Weighted Average (TWA) exposure levels and the 15-minute peak exposure levels. Photocopy this question and complete it separately for each process type and work area.

CBI

[ ] Process type ..... Mixing and Application to Electronic Components

Work area ..... Electronics Shop

La[illegible]egory	8-hour TWA Exposure Level (ppm, mg/m^3, other-specify)	15-Minute Peak Exposure Leve (ppm, mg/m^3, other-specify)
D	No Data	No Data
H&I	No Data	No Data
F	No Data	No Data
G	No Data	No Data

[ ] Mark (X) this box if you attach a continuation sheet.

9.07 For each labor category represented in question 9.06, indicate the 8-hour Time Weighted Average (TWA) exposure levels and the 15-minute peak exposure levels. Photocopy this question and complete it separately for each process type and work area.

CBI

[ ] Process type ..... Application to Spacecraft Components

Work area ..... PreAssembly Shop

Labor Category	8-hour TWA Exposure Level (ppm, mg/m^3, other-specify)	15-Minute Peak Exposure Level (ppm, mg/m^3, other-specify)
D	No Data	No Data
L	No Data	No Data
K	No Data	No Data
M	No Data	No Data
N	No Data	No Data

[ ] Mark (X) this box if you attach a continuation sheet.

9.07 For each labor category represented in question 9.06, indicate the 8-hour Time Weighted Average (TWA) exposure levels and the 15-minute peak exposure levels. Photocopy this question and complete it separately for each process type and work area.

CBI

[ ] Process type ..... Mixing and Application to Spacecraft

Work area ..... Final Assembly

La[illegible]egory	8-hour TWA Exposure Level (ppm, mg/m^3, other-specify)	15-Minute Peak Exposure Leve (ppm, mg/m^3, other-specify)
D	No Data	No Data
O	No Data	No Data
P	No Data	No Data
Q	No Data	No Data
R	No Data	No Data

[ ] Mark (X) this box if you attach a continuation sheet.

PART B WORK PLACE MONITORING PROGRAM

9.08 If you monitor worker exposure to the listed substance, complete the following table.

CBI

[ ] NO DATA

Sample/Test	Work Area ID	Testing Frequency (per year)	Number of Samples (per test)	Who Samples[1]	Analyzed In-House (Y/N)	Number of Years Records Maintained
	No monitoring data available for this substance at this time.					
Personal breathing zone	NA	NA	NA	NA	NA	NA
General work area (air)						
Wipe samples						
Adhesive patches						
Blood samples						
Urine samples						
Respiratory samples						
Allergy tests						
Other (specify) _____						
Other (specify) _____						
Other (specify) _____						

[1]Use the following codes to designate who takes the monitoring samples:

A = Plant industrial hygienist
B = Insurance carrier
C = OSHA consultant
D = Other (specify) _____

[ ] Mark (X) this box if you attach a continuation sheet.

9.11 If you conduct routine medical tests for monitoring the health effects of exposure to the listed substance, specify the type and frequency of the tests.

CBI

[ ] Test Description	Frequency (weekly, monthly, yearly, etc.)
Complete physical by MD	NA
Blood work	
Vital capacity tests	
Chest X-ray	

[ ] **Mark (X) this box if you attach a continuation sheet.**

PART C ENGINEERING CONTROLS

9.12 Describe the engineering controls that you use to reduce or eliminate worker exposur to the listed substance. Photocopy this question and complete it separately for eac process type and work area.

CBI

[ ] Process type ..... Application to Spacecraft components

Work area .....

Engineering Controls	Used (Y/N)	Year Installed	Upgraded (Y/N)	Year Upgraded
Ventilation:				
Local exhaust	Y	1985	N	NA
General dilution	N	NA	N	NA
Other (specify)	N	NA	N	NA
Vessel emission controls	N	NA	N	NA
Mechanical loading or packaging equipment	N	NA	N	NA
Other (specify)	N	NA	N	NA

[ ] Mark (X) this box if you attach a continuation sheet.

PART C ENGINEERING CONTROLS

9.12 Describe the engineering controls that you use to reduce or eliminate worker exposure to the listed substance. Photocopy this question and complete it separately for each process type and work area.

CBI

[ ] Process type ..... Mixing and Application to Electronic Components

Work area ..... Electronics Shop

Engineering Controls	Used (Y/N)	Year Installed	Upgraded (Y/N)	Year Upgraded
Ventilation:				
Local exhaust	Y	NA	N	NA
General dilution	N	NA	N	NA
Other (specify)	N	NA	N	NA
Vessel emission controls	N	NA	N	NA
Mechanical loading or packaging equipment	N	NA	N	NA
Other (specify)				

[ ] Mark (X) this box if you attach a continuation sheet.

PART C ENGINEERING CONTROLS

9.12 Describe the engineering controls that you use to reduce or eliminate worker exposure to the listed substance. Photocopy this question and complete it separately for each process type and work area.

CBI

[ ] Process type ..... Mixing and Component Fabrication

Work area ..... Development Lab

Engineering Controls	Used (Y/N)	Year Installed	Upgraded (Y/N)	Year Upgraded
Ventilation:				
Local exhaust	Y	NA	N	NA
General dilution	N	NA	N	NA
Other (specify)	N	NA	N	NA
Vessel emission controls	N	NA	N	NA
Mechanical loading or packaging equipment	N	NA	N	NA
Other (specify)				

[ ] Mark (X) this box if you attach a continuation sheet.

PART C ENGINEERING CONTROLS

9.12 Describe the engineering controls that you use to reduce or eliminate worker exposur to the listed substance. Photocopy this question and complete it separately for eac process type and work area.

CBI

[ ] Process type ..... Mixing and application to spacecraft

Work area ..... Final Assembly

Engineering Controls	Used (Y/N)	Year Installed	Upgraded (Y/N)	Year Upgradec
Ventilation:				
Local exhaust	N	NA	N	NA
General dilution	N	NA	N	NA
Other (specify)	N	NA	N	NA
Vessel emission controls	N	NA	N	NA
Mechanical loading or packaging equipment	N	NA	N	NA
Other (specify) use of hypodermics	Y	NA	N	NA

[ ] Mark (X) this box if you attach a continuation sheet.

9.13 Describe all equipment or process modifications you have made within the 3 years prior to the reporting year that have resulted in a reduction of worker exposure to the listed substance. For each equipment or process modification described, state the percentage reduction in exposure that resulted. Photocopy this question and complete it separately for each process type and work area.

CBI

[ ] Process type ..... No equipment modifications for any process in last 3 yrs.

Work area .....

Equipment or Process Modification	Reduction in Worker Exposure Per Year (%)
NA	NA

[ ] Mark (X) this box if you attach a continuation sheet.

PART D PERSONAL PROTECTIVE AND SAFETY EQUIPMENT

9.14 Describe the personal protective and safety equipment that your workers wear or use in each work area in order to reduce or eliminate their exposure to the listed substance. Photocopy this question and complete it separately for each process type and work area.

CBI

[ ] Process type ..... Mixing and Component Fabrication

Work area ..... Development Lab

Equipment Types	Wear or Use (Y/N)
Respirators	N
Safety goggles/glasses	Y
Face shields	N
Coveralls	N
Bib aprons	N
Chemical-resistant gloves	N
Other (specify)	
Lab coats	Y

[ ] Mark (X) this box if you attach a continuation sheet.

PART D PERSONAL PROTECTIVE AND SAFETY EQUIPMENT

9.14 Describe the personal protective and safety equipment that your workers wear or use in each work area in order to reduce or eliminate their exposure to the listed substance. Photocopy this question and complete it separately for each process type and work area.

CBI

[ ] Process type ..... Mixing and Application to Spacecraft

Work area ..... Final Assembly

Equipment Types	Wear or Use (Y/N)
Respirators	N
Safety goggles/glasses	Y
Face shields	N
Coveralls	N
Bib aprons	N
Chemical-resistant gloves	Y
Other (specify)	
Lab coats	Y

[ ] Mark (X) this box if you attach a continuation sheet.

PART D PERSONAL PROTECTIVE AND SAFETY EQUIPMENT

9.14 Describe the personal protective and safety equipment that your workers wear or use in each work area in order to reduce or eliminate their exposure to the listed substance. Photocopy this question and complete it separately for each process type and work area.

CBI

[ ] Process type ..... Mixing and application to electronic components

Work area ..... _____

Equipment Types	Wear or Use (Y/N)
Respirators	N
Safety goggles/glasses	Y
Face shields	N
Coveralls	N
Bib aprons	N
Chemical-resistant gloves	Y
Other (specify)	
Lab coats	Y

[ ] Mark (X) this box if you attach a continuation sheet.

PART D PERSONAL PROTECTIVE AND SAFETY EQUIPMENT

9.14 Describe the personal protective and safety equipment that your workers wear or use in each work area in order to reduce or eliminate their exposure to the listed substance. Photocopy this question and complete it separately for each process type and work area.

BI

[ ] Process type ..... Application to spacecraft components

Work area ..... Preassembly Shop

Equipment Types	Wear or Use (Y/N)
Respirators	N
Safety goggles/glasses	Y
Face shields	N
Coveralls	N
Bib aprons	N
Chemical-resistant gloves	Y
Other (specify)	
Lab coats	Y

[ ] Mark (X) this box if you attach a continuation sheet.

9.15 If workers use respirators when working with the listed substance, specify for each process type, the work areas where the respirators are used, the type of respirators used, the average usage, whether or not the respirators were fit tested, and the type and frequency of the fit tests. Photocopy this question and complete it separately for each process type.

CBI Respirators not used for any processes

[ ] Process type ..... _____

Work Area	Respirator Type	Average Usage[1]	Fit Tested (Y/N)	Type of Fit Test[2]	Frequency of Fit Tests (per year)
NA	NA	NA	NA	NA	NA

[1]Use the following codes to designate average usage:

A = Daily
B = Weekly
C = Monthly
D = Once a year
E = Other (specify) _____

[2]Use the following codes to designate the type of fit test:

QL = Qualitative
QT = Quantitative

[ ] Mark (X) this box if you attach a continuation sheet.

9.17 Respirator Training Program -- Describe your respirator training and re-training programs for each type of respirator used when working with the listed substance. Photocopy this question and complete it separately for each respirator type.

a.

Respirator type ..... Respirators not used for any processes

Type of Training[1]	Number of Workers Trained	Location of Training[2]	Length of Training (hrs)	Person Performing Training[3]	Frequency[4]
NA	NA	NA	NA	NA	NA

b.

Respirator type .....

Type of Re-training[1]	Number of Workers Re-trained	Location of Re-Training[2]	Length of Re-Training (hrs)	Person Performing Re-Training[3]	Frequency[4]
NA	NA	NA	NA	NA	NA

[1]Use the following codes to designate the type of training or re-training:

E = Emergency
R = Routine

[2]Use the following codes to designate the location of training or re-training:

A = Outside plant instruction
B = In-house classroom instruction
C = On-the-job
D = Other (specify) _____

[3]Use the following codes to designate the person who performs the training or re-training:

A = Plant industrial hygienist
B = Supervisor
C = Foreman
D = Other (specify) _____

[4]Use the following codes to designate the frequency of respirator training or re-training:

A = Monthly
B = Fixed monthly
C = Other (specify) _____

[ ] Mark (X) this box if you attach a continuation sheet.

PART E WORK PRACTICES

9.19 Describe all of the work practices and administrative controls used to reduce or eliminate worker exposure to the listed substance (e.g., restrict entrance only to authorized workers, mark areas with warning signs, insure worker detection and monitoring practices, provide worker training programs, etc.). Photocopy this question and complete it separately for each process type and work area.

CBI

[ ]

Process type ..... Mixing and Kit Preparation

Work area ..... Materials Engineering

Worker training programs; All work required to be performed in laboratory hood that has been verified by the Industrial Hygienist to have adequate capture velocity; Listed substance only used in small quantities.

9.20 Indicate (X) how often you perform each housekeeping task used to clean up routine leaks or spills of the listed substance. Photocopy this question and complete it separately for each process type and work area.

Process type ..... Mixing and Kit preparation

Work area ..... Materials Engineering

Housekeeping Tasks	Less Than Once Per Day	1-2 Times Per Day	3-4 Times Per Day	More Than 4 Times Per Day
Sweeping		X		
Vacuuming	X			
Water flushing of floors	X			
Other (specify)				
	NA			

NOTE: The above is general housekeeping - not just for TDI cleanup - TDI is not normally spilled

[ ] Mark (X) this box if you attach a continuation sheet.

PART E WORK PRACTICES

9.19 Describe all of the work practices and administrative controls used to reduce or eliminate worker exposure to the listed substance (e.g., restrict entrance only to authorized workers, mark areas with warning signs, insure worker detection and monitoring practices, provide worker training programs, etc.). Photocopy this question and complete it separately for each process type and work area.

CBI

[ ]

Process type ..... Mixing and Component Fabrication

Work area ..... Development Lab

Entrance restricted to authorized workers; workers trained and certified; all work required to be performed in a hood verified by the Industrial Hygiene staff to have adequate capture velocity; listed substance only used in very small quantity; medical monitoring

9.20 Indicate (X) how often you perform each housekeeping task used to clean up routine leaks or spills of the listed substance. Photocopy this question and complete it separately for each process type and work area.

Process type ..... Mixing and Component FAbrication

Work area ..... Development Lab

Housekeeping Tasks	Less Than Once Per Day	1-2 Times Per Day	3-4 Times Per Day	More Than 4 Times Per Day
Sweeping	X			
Vacuuming	X			
Water flushing of floors	X			
Other (specify)	X			
Clean work benches				

[ ] Mark (X) this box if you attach a continuation sheet.

PART E WORK PRACTICES

9.19 Describe all of the work practices and administrative controls used to reduce or eliminate worker exposure to the listed substance (e.g., restrict entrance only to authorized workers, mark areas with warning signs, insure worker detection and monitoring practices, provide worker training programs, etc.). Photocopy this question and complete it separately for each process type and work area.

CBI

[ ]

Process type ..... Mixing and application to electronic parts

Work area ..... Electronics Shop

Limited access by authorized workers; training and certification of workers; all work required to be performed in a lab hood verified by the Industrial Hygiene staff to have adequate capture velocity; listed substance used in small quantities; medical monitoring.

9.20 Indicate (X) how often you perform each housekeeping task used to clean up routine leaks or spills of the listed substance. Photocopy this question and complete it separately for each process type and work area.

Process type ..... Mixing and Application to electronic parts

Work area .....Electronics Shop

Housekeeping Tasks	Less Than Once Per Day	1-2 Times Per Day	3-4 Times Per Day	More Than 4 Times Per Day
Sweeping	X			
Vacuuming	X			
Water flushing of floors	X			
Other (specify) Clean work benches		X		

*Clean room, cleaning required very infrequently.

[ ] Mark (X) this box if you attach a continuation sheet.

PART E WORK PRACTICES

9.19 Describe all of the work practices and administrative controls used to reduce or eliminate worker exposure to the listed substance (e.g., restrict entrance only to authorized workers, mark areas with warning signs, insure worker detection and monitoring practices, provide worker training programs, etc.). Photocopy this question and complete it separately for each process type and work area.

CBI

[ ]

Process type ..... Application to spacecraft components

Work area ..... Preassembly Shop

Semi-restricted entrance; workers trained and certified; listed substance used in very small quantities; medical monitoring.

9.20 Indicate (X) how often you perform each housekeeping task used to clean up routine leaks or spills of the listed substance. Photocopy this question and complete it separately for each process type and work area.

Process type ..... Application to spacecraft components

Work area ..... Preassembly Shop

Housekeeping Tasks	Less Than Once Per Day	1-2 Times Per Day	3-4 Times Per Day	More Than 4 Times Per Day
Sweeping	X			
Vacuuming	X			
Water flushing of floors	X			
Other (specify)				
Clean benches		X		

[ ] Mark (X) this box if you attach a continuation sheet.

PART E WORK PRACTICES

9.19 Describe all of the work practices and administrative controls used to reduce or eliminate worker exposure to the listed substance (e.g., restrict entrance only to authorized workers, mark areas with warning signs, insure worker detection and monitoring practices, provide worker training programs, etc.). Photocopy this question and complete it separately for each process type and work area.

CBI

[ ]

Process type ..... Mixing and application to spacecraft

Work area ..... Final assembly

Restricted work area, training and certification of workers; listed substance only used in very small quantities; medical monitoring.

9.20 Indicate (X) how often you perform each housekeeping task used to clean up routine leaks or spills of the listed substance. Photocopy this question and complete it separately for each process type and work area.

Process type ..... Mixing and application to spacecraft

Work area ..... Final Assembly

Housekeeping Tasks	Less Than Once Per Day	1-2 Times Per Day	3-4 Times Per Day	More Than 4 Times Per Day
Sweeping	X			
Vacuuming	X			
Water flushing of floors	X			
Other (specify)				
Clean work benches	X			

*Clean room, cleaning required very infrequently.

[ ] Mark (X) this box if you attach a continuation sheet.

SECTION 10 ENVIRONMENTAL RELEASE

General Instructions:

Complete Part E (questions 10.23-10.35) for each non-routine release involving the list substance that occurred during the reporting year. Report on all releases that are equa to or greater than the listed substance's reportable quantity value, RQ, unless the releas is federally permitted as defined in 42 U.S.C. 9601, or is specifically excluded under the definition of release as defined in 40 CFR 302.3(22). Reportable quantities are codified in 40 CFR Part 302. If the listed substance is not a hazardous substance under the Comprehensive Environmental Response, Compensation, and Liability Act of 1980 (CERCLA) and thus, does not have an RQ, then report releases that exceed 2,270 kg. If such a substance however, is designated as a CERCLA hazardous substance, then report those releases that ar equal to or greater than the RQ. The facility may have answered these questions or simila questions under the Agency's Accidental Release Information Program and may already have this information readily available. Assign a number to each release and use this number throughout this part to identify the release. Releases over more than a 24-hour period ar not single releases, i.e., the release of a chemical substance equal to or greater than ar RQ must be reported as a separate release for each 24-hour period the release exceeds the RQ.

For questions 10.25-10.35, answer the questions for each release identified in question 10.23. Photocopy these questions and complete them separately for each release.

PART A GENERAL INFORMATION

10.01 Where is your facility located? Circle all appropriate responses.

CBI

[ ] Industrial area .....

Urban area .....(

Residential area .....(

Agricultural area .....

Rural area .....

Adjacent to a park or a recreational area .....

Within 1 mile of a navigable waterway .....

Within 1 mile of a school, university, hospital, or nursing home facility .....(

Within 1 mile of a non-navigable waterway .....

Other (specify) _____ .....

[ ] Mark (X) this box if you attach a continuation sheet.

10.02 Specify the exact location of your facility (from central point where process unit is located) in terms of latitude and longitude or Universal Transverse Mercader (UTM) coordinates.

Latitude ..... 040 ° 05 ' 26 "

Longitude ..... 075 ° 24 ' 01 "

UTM coordinates ..... Zone _____, Northing _____, Easting _____

10.03 If you monitor meteorological conditions in the vicinity of your facility, provide the following information.

NA

Average annual precipitation ..... _____ inches/year

Predominant wind direction ..... _____

10.04 Indicate the depth to groundwater below your facility.

NA Depth to groundwater ..... _____ meters

10.05 For each on-site activity listed, indicate (Y/N/NA) all routine releases of the listed substance to the environment. (Refer to the instructions for a definition of Y, N, and NA.)

CBI

[ ]

On-Site Activity	Environmental Release Air	Water	Land
Manufacturing	NA	NA	NA
Importing	NA	NA	NA
Processing	Y	NA	NA
Otherwise used	NA	NA	NA
Product or residual storage	NA	NA	NA
Disposal	NA	NA	NA
Transport	NA	NA	NA

[ ] Mark (X) this box if you attach a continuation sheet.

10.07 Complete the following table for each process stream containing the listed substanc as identified in your process block or residual treatment block flow diagram(s). Photocopy this question and complete it separately for each process type.

CBI

[__]

Process type ..... _____

Process Stream ID Code	Media Affected[1]	Average Amount of Listed Substance Released[2]	Number of Batches/Year	Days of Operation/ Year

[1]Use the following codes to designate the media affected:

A = Air
B = Land
C = Groundwater
D = POTW
E = Navigable waterway
F = Non-navigable waterway
G = Other (specify) _____

[2]Specify the average amount of listed substance released to the environment and use the following codes to designate the units used to measure the release:

A = kg/day
B = kg/batch

[__] Mark (X) this box if you attach a continuation sheet.

10.09 Point Source Emissions -- Identify each emission point source containing the listed substance in terms of a Stream ID Code as identified in your process block or residual treatment block flow diagram(s), and provide a description of each point source. Do not include raw material and product storage vents, or fugitive emissio sources (e.g., equipment leaks). Photocopy this question and complete it separatel for each process type.

CBI

[ ]

Process type ..... All processes

Point Source ID Code	Description of Emission Point Source
NA	NA

No point source emissions.

[ ] Mark (X) this box if you attach a continuation sheet.

10.11 Stack Parameters -- Identify the stack parameters for each Point Source ID Code identified in question 10.09 by completing the following table.

CBI

[ ]

Point Source ID Code	Stack Height(m)	Stack Inner Diameter (at outlet) (m)	Exhaust Temperature (°C)	Emission Exit Velocity (m/sec)	Building Height(m)[1]	Building Width(m)[2]	Vent Type[3]
NA	NA	NA	NA	NA	NA	NA	NA

[1]Height of attached or adjacent building

[2]Width of attached or adjacent building

[3]Use the following codes to designate vent type:

H = Horizontal
V = Vertical

[ ] Mark (X) this box if you attach a continuation sheet.

10.13 Equipment Leaks -- Complete the following table by providing the number of equipment types listed which are exposed to the listed substance and which are in service according to the specified weight percent of the listed substance passing through the component. Do this for each process type identified in your process block or residual treatment block flow diagram(s). Do not include equipment types that are not exposed to the listed substance. If this is a batch or intermittently operated process, give an overall percentage of time per year that the process type is exposed to the listed substance. Photocopy this question and complete it separately for each process type.

CBI

[ ] Process type ..... NA

Percentage of time per year that the listed substance is exposed to this process type ..... _____%

Equipment Type	Number of Components in Service by Weight Percent of Listed Substance in Process Stream					
	Less than 5%	5-10%	11-25%	26-75%	76-99%	Greater than 99%
Pump seals[1]						
Packed	NA					
Mechanical						
Double mechanical[2]						
Compressor seals[1]						
Flanges						
Valves						
Gas[3]						
Liquid						
Pressure relief devices[4] (Gas or vapor only)						
Sample connections						
Gas						
Liquid						
Open-ended lines[5] (e.g., purge, vent)						
Gas						
Liquid						

[1] List the number of pump and compressor seals, rather than the number of pumps or compressors

10.13 continued on next page

[ ] Mark (X) this box if you attach a continuation sheet.

10.15 Equipment Leak Detection -- If a formal leak detection and repair program is in place, complete the following table regarding those leak detection and repair procedures. Photocopy this question and complete it separately for each process type.

CBI

[ ] Process type ..... NA

Equipment Type	Leak Detection Concentration (ppm or mg/m^3) Measured at ___ Inches from Source	Detection Device[1]	Frequency of Leak Detection (per year)	Repairs Initiated (days after detection)	Repairs Completed (days after initiated)
Pump seals					
Packed	NA	NA	NA	NA	NA
Mechanical					
Double mechanical					
Compressor seals					
Flanges					
Valves					
Gas					
Liquid					
Pressure relief devices (gas or vapor only)					
Sample connections					
Gas					
Liquid					
Open-ended lines					
Gas					
Liquid					

[1]Use the following codes to designate detection device:

POVA = Portable organic vapor analyzer
FPM = Fixed point monitoring
O = Other (specify) _____

[ ] Mark (X) this box if you attach a continuation sheet.

PART D RELEASE TO WATER

10.17 National Pollutant Discharge Elimination System (NPDES) Discharges -- Complete the following information for each body of water NPDES discharges are discharged into. If discharges are to more than one body of water, photocopy this question and complete it separately for each discharge.

CBI

[__]

Discharge source (stream ID code) ..... _____

Is discharge to a moving or standing body of water? Circle the appropriate response.

Moving body of water 1

Standing body of water 2

Estimated average base flow (moving) ..... _____ l/day

Estimated average volume (standing) ..... _____ l

Average volume of discharge from facility ..... _____ l/day

_____ days/year

Maximum volume of discharge from facility ..... _____ l/day

_____ days/year

Average concentration of listed substance in discharge .... _____ mg/l or ppm

Maximum concentration of listed substance in discharge .... _____ mg/l or ppm

10.18 Publicly Owned Treatment Works (POTW) -- Complete the following information for discharges containing the listed substance which are discharged to a POTW from your facility.

CBI

[__] Discharge source (stream ID code) ..... _____

Average volume of discharge from facility ..... _____ l/day

_____ days/year

Maximum volume of discharge from facility ..... _____ l/day

_____ days/year

Average concentration of listed substance in discharge .... _____ mg/l or ppm

Maximum concentration of listed substance in discharge .... _____ mg/l or ppm

[__] Mark (X) this box if you attach a continuation sheet.

PART E NON-ROUTINE RELEASES

10.23 Indicate the date and time when the release occurred and when the release ceased or was stopped. If there were more than six releases, attach a continuation sheet and list all releases.

Release	Date Started	Time (am/pm)	Date Stopped	Time (am/pm)
1	NA	NA	NA	NA
2				
3				
4				
5				
6				

10.24 Specify the weather conditions at the time of each release.

Release	Wind Speed (km/hr)	Wind Direction	Humidity (%)	Temperature (°C)	Precipitation (Y/N)
1					
2					
3					
4					
5					
6					

[ ] Mark (X) this box if you attach a continuation sheet.

10.27 Circle all appropriate responses relating to the cause and the effects of the release.

Release No. ..... N/A

Cause of Release

Equipment failure .....

Operator error .....

Bypass condition .....

Upset condition .....

Fire .....

Unknown .....

Other (specify) _____ .....

Results of Release

Spill .....

Vapor release .....

Explosion .....

Fire .....

Other (specify) _____ .....

[ ] Mark (X) this box if you attach a continuation sheet.

10.28 (continued)

c. Local

Agency [_]]_]_]_]_]_]_]_]_]_]_]_]_]_]_]_]_]_]_]_]

Office [_]]_]_]_]_]_]_]_]_]_]_]_]_]_]_]_]_]_]_]_]

Contact Person [_]]_]_]_]_]_]_]_]_]_]_]_]_]_]_]_]_]_]_]_]

Address [_]]_]
Street

[_]]_]
City

[_]_]
State

Telephone Number .... [_]_]_]-[_]_]_]-[_]_]_]_]

Date Notified .... [_]_] [_]_] [_]_]
Mo. Day Year

Time Notified .... [_]_]_]_] am/pm

10.29 For each of the proximities listed below, indicate whether the population living within that proximity was notified of, or evacuated because of the release. Specify who notified the population, the number of people evacuated, if any, and the date and time of day the evacuation began.

Release No. .... ______

Proximity to the Release	Notified of Release (Y/N)	Notifying Person	Notifying Person's Telephone Number	Area Evacuated (Y/N)	Number of Persons Evacuated	Date and Time of Day Evacuation Began
1/4 mile	______	______	______	______	______	______
1/2 mile	______	______	______	______	______	______
1 mile	______	______	______	______	______	______
Other (specify)	______	______	______	______	______	______

[_] Mark (X) this box if you attach a continuation sheet.

10.33 Indicate which of the prevention practices and policies listed in question 10.32 were ineffective in preventing the release from reaching the environment.

Release No. ..... _____

_____

_____

_____

_____

10.34 Describe all repairs and/or preventive measures (management practices, operational changes, etc.) made to equipment or operations as a result of the release.

Release No. ..... _____

_____

_____

_____

_____

10.35 Describe additional preventive measures that will be taken to minimize the possibilities of recurrence.

Release No. ..... _____

_____

_____

_____

_____

[ ] Mark (X) this box if you attach a continuation sheet.

SECTION 1: PRODUCT INFORMATION

PRODUCT NAME: SOLITHANE 113 EFFECTIVE DATE: 02/24/89

CHEMICAL NAME: Isocyanate Terminated Polyol SUPERCEDES: 12/87

PRODUCT USE: Coatings and Castings

EMERGENCY PHONE: (815)338-1800 (24 hours/day) OTHER INFORMATION PHONE: (312)807-3421

SECTION 2: HAZARDOUS INGREDIENTS

CHEMICAL NAME/COMMON NAME	% [1]	CAS NO.	OSHA PEL	ACGIH TLV	OTHER
*Toluene Diisocyanate/ TDI	6-7	584-84-9	0.02 ppm [2]	0.005 ppm	TLV-STEL = 0.02 ppm

SECTION 3: PHYSICAL DATA [1]

% NON-VOLATILES: 93

VAPOR DENSITY (Air = 1): > 6

pH: Not Applicable

BOILING POINT: 482 F (250 C) @ 760 mm Hg

VAPOR PRESSURE: Not Applicable

SOLUBILITY IN WATER: Not Applicable

SPECIFIC GRAVITY (water = 1): 1.073

EVAPORATION RATE (nBUOAc = 1): < 1

APPEARANCE AND ODOR: Pale Yellow; Irritating Pungent Odor

SECTION 4: FIRE AND EXPLOSION HAZARDS

FLASH POINT: > 200 F (94 C)

METHOD USED: Setaflash

FLAMMABLE LIMITS:
LEL: Not Applicable
UEL: Not Applicable

[1] Typical amount, not a specification.
[2] Governed by a ceiling limit value (C) - The value which should not be exceeded during any part of the working exposure.

EXTINGUISHING MEDIA: Use foam, dry chemical.

SPECIAL FIRE FIGHTING PROCEDURES: Full emergency equipment with NIOSH/MSHA approved self-contained full-face positive pressure breathing apparatus should be worn.

UNUSUAL FIRE AND EXPLOSION HAZARDS: None known.

HAZARDOUS DECOMPOSITION PRODUCTS: Carbon monoxide, carbon dioxide, oxides of nitrogen, possibly aromatic amines, aldehydes, ammonia, and small amounts of hydrogen cyanide under burning conditions.

SECTION 5: HEALTH HAZARD DATA

ORAL TOXICITY:
Unknown for product mixture. Animal experiments indicate that the toxic effects of TDI or polymeric isocyanates when ingested are slight. The LD50 in rats for TDI is 5840 mg/kg. From these experiments, it is believed that ingestion of TDI or polymeric isocyanates would not be fatal to humans, but could result in irritation and corrosive action on the mouth and stomach tissue.

TDI: orl-rat: LD50: 5800 mg/kg (R.T.E.C.S. No. CZ 6300000)

SECTION 5: HEALTH HAZARD DATA, continued

DERMAL TOXICITY:
Unknown for product mixture. Isocyanates react with skin protein and tissue moisture. If not promptly removed, liquid spills on the skin can cause reddening, swelling, and blistering of the exposed skin. REPEATED SKIN CONTACT HAS CAUSED SKIN SENSITIZATION IN HUMANS AND SHOULD BE AVOIDED.

TDI: skn-rbt: 500 mg/24H MOD

EYE:
Unknown for product mixture. EYE CONTACT - LIQUID ISOCYANATES SPLASHED INTO THE EYES CAN BE HARMFUL TO THE DELICATE EYE TISSUE AND MUST BE AVOIDED. Injury results from reaction of the isocyanate with the eye fluid which may dehydrate the tissue and result in severe irritation of the eyelid and possible damage to the cornea (corneal opacity). Exposure to high concentrations of isocyanate vapor can lead to formation of solid crystals in the eye fluid causing mechanical irritation of the eyes hours after exposure.

TDI: eye-rbt: 100 mg SEV

INHALATION TOXICITY:
Unknown for product mixture. Inhalation of isocyanate vapors can produce severe irritation of the mucous membranes in the respiratory tract, i.e. nose, throat, and lungs. Exposure of humans to concentrations of isocyanate vapor in excess of the maximum acceptable concentration has caused illness characterized by breathlessness, chest discomfort and reduced pulmonary function. Massive exposure to high concentrations has caused, within minutes, irritation of the trachea and larynx and severe coughing spasms. Massive exposure may also lead to bronchitis, bronchial spasm, and/or pulmonary edema (chemical pneumonitis). Concentrations of isocyanate vapors should be maintained below the TLV by engineering controls. Can cause sensitization in humans.

TDI: ihl-hmn: TCLo: 0.02 ppm/2Y:PUL
ihl-hmn: TCLo: 0.5 ppm:IRR

References: N.I.O.S.H. - R.T.E.C.S., 1982.
Sax: Dangerous Properties of Industrial Materials (1984)

CHRONIC TOXICITY:

Unknown for product mixture. Toluene diisocyanate (TDI) is considered a suspect carcinogen as tested by National Toxicology Program, 1983, in rats and female mice. Administered by gavage to rats, TDI caused subcutaneous neoplasms or cancers in both sexes. Additionally, males developed pancreatic neoplasms and females, pancreatic, liver and mammary neoplasms. In mice similarly exposed, TDI caused circulatory neoplasms and cancers (combined) and liver neoplasms in females but was not carcinogenic to males. (NTP 1983 Program Tech Report on Carcinogenic Study of Commercial Grade of TDI.)

EFFECTS OF OVEREXPOSURE:

INGESTION:
Unknown for product mixture. May cause gastrointestinal irritation, nausea, drowsiness, and possibly unconsciousness.

SKIN CONTACT:
Unknown for product mixture. Repeated or prolonged contact may cause skin dryness, redness, swelling and dermatitis. Isocyanate sensitization is possible.

SECTION 5: HEALTH HAZARD DATA, continued

EYE CONTACT:
Unknown for product mixture. Vapor and liquid are severe eye irritants. May produce severe eye irritation and corneal edema.

INHALATION:
Unknown for product mixture. Vapors are severe nasal and respiratory irritants. High exposure to the solvent vapors may result in headache, narcotic effect, and unconsciousness. Asthmatic-type symptoms may develop as a reaction to residual isocyanate monomers.

ACUTE SYSTEMIC EFFECTS:
May cause irritation of the eyes, nose and throat. Severe overexposure may cause weakness, drowsiness and unconsciousness.

CHRONIC SYSTEMIC EFFECTS:
Signs and symptoms from chronic exposure resemble those from acute mishaps but are in part systemically more severe. Extended exposure to isocyanate vapors may cause sensitization resulting in asthmatic symptoms.

NOTES:
Medical conditions generally recognized as being aggravated by exposure:

- Toxicity testing on the product mixture has not been conducted. Comments in SECTION V pertain only to the constituent(s) listed in SECTION II.

- Persons with pre-existing skin disorders may be more susceptible to the effects of the isocyanate.

- In persons with impaired pulmonary function, especially those with obstructive airway diseases, the breathing of isocyanate vapors might cause exacerbation of symptoms due to irritant properties. Individuals with pre-existing pulmonary problems such as asthma may also be more susceptible to the isocyanate.

SECTION 6: EMERGENCY HEALTH AND FIRST AID PROCEDURES

EYE CONTACT: May cause eye irritation and if not removed immediately can produce burns. Immediately rinse eyes with constant stream of fresh water for 15 minutes, lifting upper and lower eyelids frequently. Consult a physician immediately.

SKIN CONTACT: Remove contaminated clothing and wash exposed skin thoroughly with warm water and soap. If irritation is present after washing, get medical attention.

INHALATION: Remove exposed person to fresh air. If breathing has stopped perform artificial respiration. Keep the affected person warm and at rest. Get medical attention immediately.

INGESTION: DO NOT induce vomiting. Obtain medical attention immediately, if unavailable contact nearest Poison Control Center. Keep affected person warm and at rest.

NOTE TO PHYSICIAN: Supportive therapy is recommended. No known antidote. Careful lavage may be indicated after ingestion.

SECTION 7: REACTIVITY DATA

STABLE OR UNSTABLE:
Stable under normal conditions of usage.

CONDITIONS TO AVOID:
Storage at temperatures above 110 F and moisture contact.

INCOMPATIBLE SUBSTANCES:
Oxidizing substances.

CAN HAZARDOUS POLYMERIZATION OCCUR:
Will not occur.

HAZARDOUS DECOMPOSITION PRODUCTS AND CONDITIONS:
Carbon monoxide, carbon dioxide, oxides of nitrogen, possibly aromatic amines, aldehydes, ammonia, and small amounts of hydrogen cyanide under burning conditions.

SECTION 8: SPILL AND LEAK PROCEDURES

RESPONSE TO SPILLS:
Stop discharge and contain spill or contaminated material using dike, barrier, or other means. Recover with pumping equipment, vacuum truck, sorbents or by other means. Neutralize by soaking with 5% ammonia solution or water with 10% isopropanol. Open containers should not be closed for disposal until all foaming or bubbling has stopped. Place material in suitable containers for further handling.

HAZARDS TO BE AVOIDED:
Do not flush to stream, other bodies of water or sewer unless authorized. Avoid contact with skin or clothing. Other hazards see Section Nos. IV (Fire and Explosion Data), V (Health Hazard Data), and IX (Control Measures).

SPILL NOTIFICATION:
This product contains one or more hazardous substances as listed in 40 CFR 302.4, which, if released into the environment in a quantity equal to or greater than the reportable quantity, must immediately be reported to the National Response Center (NRC), Telephone No. 1-800-424-8802. Check Federal, State and local reporting regulations.

DISPOSAL METHODS:
(a) Recycle, if feasible.
(b) Incinerate in authorized facility.
(c) Treatment at Industrial or Liquid Waste treatment facility.
(d) Landfill in authorized facility. (Solidification or fixation may be required prior to landfill disposal.)

NOTES:
THIS MATERIAL IF BEING DISCARDED DISPOSE OF IN ACCORDANCE WITH LOCAL, STATE, AND FEDERAL REGULATIONS.

SECTION 9: CONTROL MEASURES

RESPIRATORY PROTECTION:
Use NIOSH/MSHA approved respiratory protection within equipment limitations. Consult OSHA 29 CFR, 1910.134, Respiratory Protection. S.C.B.A. or air line respirators may be required for protection against the isocyanate. An Industrial Hygienist should be consulted to aid in this determination and for consultation regarding respirator selection, use and training.

OTHER PROTECTIVE EQUIPMENT:

FOR HANDS AND BODY:
Chemical resistant gloves are recommended for hand protection. Work clothing for general body protection and other protective clothing as necessary to prevent repeated or prolonged skin contact.

FOR EYES:
Safety glasses, face shields (eight-inch minimum) or splash-proof chemical goggles in addition to safety glasses during pouring and dispensing or where other eye hazards exist.

OTHER:
- Use under well-ventilated conditions.
- For personal hygiene protection we recommend that employees wash thoroughly after handling product. Always wash-up before eating, drinking, smoking or using restroom facilities.
- Properly bond and ground all containers during pouring, dispensing and mixing operations to minimize the static charge buildup.

VENTILATION:
Exhaust ventilation at all vapor release points is recommended to maintain vapors below lowest TLV of substance in mixture.

SECTION 10: SPECIAL PRECAUTIONS

RECOMMENDED STORAGE PRACTICE AND CONDITIONS:
Store between 50 and 100 F in dry area. Storage at higher temperatures causes polymerization.

SECTION 10: SPECIAL PRECAUTIONS, continued

OTHER PRECAUTIONS:
For industrial use-only. Use with adequate ventilation. Avoid skin contact. Eyewash and shower should be available.
Always wash-up after handling and before eating, drinking, smoking or using restroom facilities.

SECTION 11: LABELING INFORMATION

DOT SHIPPING NAME:	Non-Regulated
DOT LABEL:	Not Applicable
DOT IDENTIFICATION NO.:	Not Applicable
MORTON PRECAUTIONARY LABEL NO.:	L177

SECTION 12: REGULATORY INFORMATION

SARA TITLE III, SECTION 313 REQUIREMENTS:

Substances identified with an asterisk in SECTION 2 - HAZARDOUS INGREDIENTS, are toxic chemicals under Section 313. If no material is identified with an asterisk, then this product contains no substance reportable under this notification requirement.

SECTION 13: USERS RESPONSIBILITY

A BULLETIN SUCH AS THIS CANNOT BE EXPECTED TO COVER ALL POSSIBLE INDIVIDUAL SITUATIONS. AS THE USER HAS THE RESPONSIBILITY TO PROVIDE A SAFE WORKPLACE, ALL ASPECTS OF AN INDIVIDUAL OPERATION SHOULD BE EXAMINED TO DETERMINE IF, OR WHERE, PRECAUTIONS - IN ADDITION TO THOSE DESCRIBED HEREIN - ARE REQUIRED. ANY HEALTH HAZARD AND SAFETY INFORMATION CONTAINED HEREIN SHOULD BE PASSSED ON TO YOUR CUSTOMERS OR EMPLOYEES, AS THE CASE MAY BE. MORTON THIOKOL, INC. MUST RELY ON THE USER TO UTILIZE THE INFORMATION WE HAVE SUPPLIED TO DEVELOP WORK PRACTICE GUIDELINES AND EMPLOYEE INSTRUCTIONAL PROGRAMS FOR THE INDIVIDUAL OPERATION.

DISCLAIMER OF LIABILITY

The information contained herein is, to the best of our knowledge and belief, accurate. However, since the conditions of handling and use are beyond our control, we make no guarantee of results, and assume no liability for damages incurred by use of this material. All chemicals may present unknown health hazards and should be used with caution. Although certain hazards are described herein, we cannot guarantee that these are the only hazards which exist. Final determination of suitability of the chemical is the sole responsibility of the user. Users of any chemical should satisfy themselves that the conditions and methods of use assure that the chemical is used safely. NO REPRESENTATIONS OR WARRANTIES, EITHER EXPRESSED OR IMPLIED, OF MERCHANTABILITY, FITNESS FOR A PARTICULAR PURPOSE OR ANY OTHER NATURE ARE MADE HEREUNDER WITH RESPECT TO THE INFORMATION CONTAINED HEREIN OR THE CHEMICAL TO WHICH THE INFORMATION REFERS. It is the responsibility of the user to comply with all applicable Federal, State and local laws and regulations.

Nothing contained herein is to be construed as a recommendation for use in violation of any patents or of applicable laws or regulations.

INITIALS: DBW:PSF - Chicago
SKF:mes - Woodstock

COMMONWEALTH OF PENNSYLVANIA ADDENDUM TO

MATERIAL SAFETY DATA SHEET

SOLITHANE 113

All of the materials in this product that are required by the Commonwealth of Pennsylvania to be identified are either listed below or in SECTION 2 of the Material Safety Data Sheet. In addition, some of the materials identified may have been placed by the Commonwealth of Pennsylvania on their Hazardous Substance List.

INGREDIENTS	CAS NUMBER	WEIGHT %
Isocyanate Terminated Polyol	Proprietary	93-94

The specific chemical identity of any substance not identified with a Chemical Abstracts Service Number is being withheld as a trade secret.

MSDS EFFECTIVE DATE: 02/24/89
ADDENDUM EFFECTIVE DATE: 02/24/89

SKF:mes

APPENDIX II: Substantiation Form and Instructions to Accompany Claims of Confidentiality Under the Comprehensive Assessment Information Rule (CAIR)

If you assert one or more claims of confidentiality for information submitted on a Comprehensive Assessment Information Rule (CAIR) form, please answer, pursuant to 40 CFR 740.219, all the following questions in the space provided. Type all responses. If you need more space to answer a particular question, please use additional sheets. If you us additional sheets, be sure to include the section, number, and (if applicable) subpart of the question being answered, and write your facility's name and Dun & Bradstreet Number i the lower right-hand corner of each sheet. A completed copy of this form must accompany all submissions containing one or more claims of confidentiality. Failure to do so will result in the waiver of your claim of confidentiality.

EPA has identified six information categories as those which encompass all claims of confidentiality. These are: Submitter identity (h); Substance identity (i); Volume manu factured, imported, or processed (j); Use information (k); Process information (l); and Other information (m). Respondents who assert a CBI claim on the reporting form must mar the letter(s) (h through m) that represent(s) the appropriate category(ies) of confidentiality in the box adjacent to the question, and answer the questions in this form.

Respondents who assert a CBI claim for information submitted under CAIR must also provide EPA with sanitized and unsanitized versions of their submissions. The unsanitize version must be complete and contain all information being claimed as confidential. The sanitized copy must contain only information not claimed as confidential. EPA will place the second copy of the submission in the public file. Failure to submit the second copy the form at the time the respondent submits the reporting form containing confidential information or after receipt of a notice from EPA thereafter will result in a waiver of t respondent's claim of confidentiality.

Please indicate the CAS Registry Number (if known) or chemical name (if the CAS Registry Number is not known) for the substance that is the subject of this form:

_____

If you are reporting on a tradename, please provide the tradename for the substance that the subject of this form:

_____

Does this form contain CBI? [ ] Yes [ ] No

If the answer to this question is yes, you must bracket the text claimed as CBI. Any unbracketed information may be placed in the public file.

[ ] Mark (X) this box if you attach a continuation sheet.

(5) If the information you wish to claim as confidential were to be disclosed to the public by EPA, how much difficulty would a new competitor have in entering the market for this substance, considering such constraints as capital and marketing costs, specialized marketing expertise, or unusual production processes?

(6) Has EPA, another Federal agency, or a Federal Court made any pertinent confidentiality determinations for information regarding this substance?

[ ] Yes [ ] No

If so, please identify the entity and provide EPA with copies of such determinations.

B. Submitter Identity (code h). Respondents who assert CBI claims for submitter identity must also answer the following questions:

(1) Approximately how many competitors do you have in the market for this substance or the final product containing this substance?

(2) What harm, if any, would result from EPA's disclosure of the submitter identity? Provide detailed descriptions of both the probable harm from disclosure and the causal relationship between disclosure and harm.

(3) If you have also asserted a claim of confidentiality for substance identity, what harm to your company's competitive position would result from disclosure of your company's identity if the substance identity were to remain confidential?

[ ] Mark (X) this box if you attach a continuation sheet.

(c) If the substance is formulated with other chemicals, list them, and state the concentration of the claimed substance in the mixture.

(3) (a) If the substance leaves the site in a product that is available to the public o your competitors, can the substance be identified by analysis of the product?

[ ] Yes [ ] No

(b) Is it likely that a competitor has attempted or will attempt to chemically analyze the substance?

[ ] Yes [ ] No

(c) Would the cost and difficulty of such analysis be great or small? Why?

(4) What harm, if any, would result from EPA's public disclosure of the specific chemica identity? Provide detailed descriptions of both the probable harm to your company from disclosure and the causal relationship between release and harm.

(5) Would public disclosure of the specific chemical identity reveal to your competitors the use of the substance or the process by which this substance is manufactured?

[ ] Mark (X) this box if you attach a continuation sheet.

(2) If you have also claimed substance identity as confidential and EPA keeps confidenti: the link between the substance identity and the use data, the substance identity will not be associated in any way with the use data. In this case, what harm to your company's competitive position would result from disclosing the use data? How could a competitor u: this information? What is the causal relationship between the disclosure and the harm?

(3) If you have claimed neither submitter nor substance identity as confidential, what harm, if any, would result from release of your use information? Provide a detailed description of both the harm and the causal relationship between disclosure and harm.

F. Process information (code 1). Respondents who assert CBI claims for process information must also answer the following questions:

(1) If you have also claimed submitter identity as confidential and EPA keeps confidenti: the link between your company identity and process information, your identity will not be associated in any way with this information. In this case, what harm to your competitive position would result from disclosing the process information? How could a competitor us this information? What is the causal relationship between the disclosure and the harm?

(2) If you have also claimed substance identity as confidential and EPA keeps confidenti the link between the substance identity and the process information, the substance identi will not be associated in any way with the process information. In this case, what harm your company's competitive position would result from disclosing the process information? How could a competitor use this information? What is the causal relationship between the disclosure and the harm?

[ ] Mark (X) this box if you attach a continuation sheet.

I certify that I have personally examined and am familiar with the information submitted in this CBI Substantiation Form and all attached documents. Based on my inquiry of those individuals immediately responsible for obtaining the information, I believe that the information is true, accurate, and complete.

NAME	SIGNATURE	DATE SIGNED
TITLE	(_____) TELEPHONE NO.	

[ ] Mark (X) this box if you attach a continuation sheet.