CONTAINS NO CBI

8 JUL 11 PM 1:32

SECTION 1 GENERAL MANUFACTURER, IMPORTER, AND PROCESSOR INFORMATION

PART A GENERAL REPORTING INFORMATION

1.01 This Comprehensive Assessment Information Rule (CAIR) Reporting Form has been completed in response to the Federal Register Notice of..... [1][2] [2][2] [8][8]
mo. day year

CBI

[ ] a. If a Chemical Abstracts Service Number (CAS No.) is provided in the Federal Register, list the CAS No. ..... [0][2][6][4][7][1]-[6][2]-[5]

b. If a chemical substance CAS No. is not provided in the Federal Register, list either (i) the chemical name, (ii) the mixture name, or (iii) the trade name of the chemical substance as provided in the Federal Register.

(i) Chemical name as listed in the rule ..... N/A

(ii) Name of mixture as listed in the rule .... N/A

(iii) Trade name as listed in the rule ..... N/A

c. If a chemical category is provided in the Federal Register, report the name of the category as listed in the rule, the chemical substance CAS No. you are reporting on which falls under the listed category, and the chemical name of the substance you are reporting on which falls under the listed category.

Name of category as listed in the rule ..... N/A

CAS No. of chemical substance ..... [N][A][ ][ ][ ][ ]-[ ][ ]-[ ]

Name of chemical substance ..... N/A

1.02 Identify your reporting status under CAIR by circling the appropriate response(s).

CBI

[ ]

Manufacturer 1

Importer 2

Processor ..... (3)

X/P manufacturer reporting for customer who is a processor 4

X/P processor reporting for customer who is a processor 5

EPA-OTS

000622892T

90-890000538

[ ] Mark (X) this box if you attach a continuation sheet.

1.03 Does the substance you are reporting on have an "x/p" designation associated with it in the above-listed Federal Register Notice?

CBI

[ ]

Yes ..... [X] Go to question 1.04

No ..... [ ] Go to question 1.05

1.04 a. Do you manufacture, import, or process the listed substance and distribute it under a trade name(s) different than that listed in the Federal Register Notice? Circle the appropriate response.

CBI

[ ]

Yes 1

(No) 2

b. Check the appropriate box below:

[ ] You have chosen to notify your customers of their reporting obligations

Provide the trade name(s) .... _____

_____

[ ] You have chosen to report for your customers

[ ] You have submitted the trade name(s) to EPA one day after the effective date of the rule in the Federal Register Notice under which you are reporting.

1.05 If you buy a trade name product and are reporting because you were notified of your reporting requirements by your trade name supplier, provide that trade name.

CBI

[ ]

Trade name ..... _____

Is the trade name product a mixture? Circle the appropriate response.

Yes 1

(No) 2

1.06 Certification -- The person who is responsible for the completion of this form must sign the certification statement below:

CBI

[ ]

"I hereby certify that, to the best of my knowledge and belief, all information entered on this form is complete and accurate."

Mike Mahoney	Joseph M. Mahoney	7-7-89
NAME	SIGNATURE	DATE SIGNED

General Manager	(205) 437 - 2148
TITLE	TELEPHONE NO.

[ ] Mark (X) this box if you attach a continuation sheet.

1.07 Exemptions From Reporting -- If you have provided EPA or another Federal agency with the required information on a CAIR Reporting Form for the listed substance within the past 3 years, and this information is current, accurate, and complete for the time period specified in the rule, then sign the certification below. You are required to complete section 1 of this CAIR form and provide any information now required but not previously submitted. Provide a copy of any previous submissions along with your Section 1 submission.

CBI [__]

"I hereby certify that, to the best of my knowledge and belief, all required information which I have not included in this CAIR Reporting Form has been submitted to EPA within the past 3 years and is current, accurate, and complete for the time period specified in the rule."

NA		
NAME	SIGNATURE	DATE SIGNED
TITLE	(_____) _____ - _____ TELEPHONE NO.	DATE OF PREVIOUS SUBMISSION

1.08 CBI Certification -- If you have asserted any CBI claims in this report you must certify that the following statements truthfully and accurately apply to all of those confidentiality claims which you have asserted.

CBI [__]

"My company has taken measures to protect the confidentiality of the information, and it will continue to take these measures; the information is not, and has not been, reasonably ascertainable by other persons (other than government bodies) by using legitimate means (other than discovery based on a showing of special need in a judicial or quasi-judicial proceeding) without my company's consent; the information is not publicly available elsewhere; and disclosure of the information would cause substantial harm to my company's competitive position."

NA		
NAME	SIGNATURE	DATE SIGNED
TITLE	(_____) _____ - _____ TELEPHONE NO.	

[__] Mark (X) this box if you attach a continuation sheet.

PART B CORPORATE DATA

1.09 Facility Identification

CBI Name [H I G H _ S T A N D A R D _ P A D _ I N C _ _ _ _ _]

[_] Address [1 0 4 _ T E N N E S S E E _ _ _ _ _ _ _ _ _ _ _ _]
Street

[S T E V E N S O N _]
City

[A L] [3 5 7 7 2]--[_ _ _ _]
State Zip

Dun & Bradstreet Number .....NONE.....[_ _]-[_ _ _]-[_ _ _ _]

EPA ID Number .....NONE.....[_ _ _ _ _ _ _ _ _]

Employer ID Number .....[_ _ _ _ _ _ U K]

Primary Standard Industrial Classification (SIC) Code .....[3 0 8 6]

Other SIC Code .....[_ _ _ _]

Other SIC Code .....[_ _ _ _]

1.10 Company Headquarters Identification

CBI Name [H I G H _ S T A N D A R D _ P A D _ I N C _ _ _ _ _]

[_] Address [1 0 4 _ T E N N E S S E E _ _ _ _ _ _ _ _ _ _ _ _]
Street

[S T E V E N S O N _]
City

[A L] [3 5 7 7 2]--[_ _ _ _]
State Zip

Dun & Bradstreet Number .....NONE.....[_ _]-[_ _ _]-[_ _ _ _]

Employer ID Number .....[_ _ _ _ _ _ U K]

[_] Mark (X) this box if you attach a continuation sheet.

1.11 Parent Company Identification

CBI Name [O H I O _ D E C O R A T I V E _ P R O D U C T S _ _]

[ ] Address [2 2 0 _ S. _ E L I Z A B E T H _ S T R E E T _ _]
Street

[S P E N C E R V I L L E _ _ _ _ _ _ _ _ _ _ _ _]
City

[O H] [4 5 8 8 7]--[_ _ _ _]
State Zip

Dun & Bradstreet Number .....[0 0]-[5 0 3]-[6 2 6 4]

1.12 Technical Contact

CBI Name [M I K E _ M A H O N E Y _ _ _ _ _ _ _ _ _ _ _ _]

[ ] Title [G E N E R A L _ M A N A G E R _ _ _ _ _ _ _ _ _ _]

Address [1 0 4 _ T E N N E S S E E _ A V E N U E _ _ _ _ _]
Street

[S T E V E N S O N _ _ _ _ _ _ _ _ _ _ _ _ _ _ _ _ _ _]
City

[A L] [3 5 7 7 2]--[_ _ _ _]
State Zip

Telephone Number .....[2 0 5]-[4 3 7]-[2 1 4 8]

1.13 This reporting year is from ..... [0 7] [8 7] to [0 6] [8 8]
Mo. Year Mo. Year

[ ] Mark (X) this box if you attach a continuation sheet.

1.14 Facility Acquired -- If you purchased this facility during the reporting year, provide the following information about the seller:

NA

CBI Name of Seller [__]

[__] Mailing Address [__]
Street

[__]
City

[__][__] [__][__][__][__][__]--[__][__][__][__]
State Zip

Employer ID Number .....[__][__][__][__][__][__][__][__]

Date of Sale .....[__][__] [__][__] [__][__]
Mo. Day Year

Contact Person [__]

Telephone Number .....[__][__][__]-[__][__][__]-[__][__][__][__]

1.15 Facility Sold -- If you sold this facility during the reporting year, provide the following information about the buyer:

NA

CBI Name of Buyer [__]

[__] Mailing Address [__]
Street

[__]
City

[__][__] [__][__][__][__][__]--[__][__][__][__]
State Zip

Employer ID Number .....[__][__][__][__][__][__][__][__]

Date of Purchase .....[__][__] [__][__] [__][__]
Mo. Day Year

Contact Person [__]

Telephone Number .....[__][__][__]-[__][__][__]-[__][__][__][__]

[__] Mark (X) this box if you attach a continuation sheet.

1.16 For each classification listed below, state the quantity of the listed substance that was manufactured, imported, or processed at your facility during the reporting year.

CBI

[__]

Classification	Quantity (kg/yr)
Manufactured	N/A
Imported	N/A
Processed (include quantity repackaged)	81,637
Of that quantity manufactured or imported, report that quantity:	
In storage at the beginning of the reporting year	N/A
For on-site use or processing	N/A
For direct commercial distribution (including export)	N/A
In storage at the end of the reporting year	N/A
Of that quantity processed, report that quantity:	
In storage at the beginning of the reporting year	UK
Processed as a reactant (chemical producer)	81,637
Processed as a formulation component (mixture producer)	N/A
Processed as an article component (article producer)	N/A
Repackaged (including export)	N/A
In storage at the end of the reporting year	UK

[__] Mark (X) this box if you attach a continuation sheet.

PART C IDENTIFICATION OF MIXTURES

1.17 Mixture -- If the listed substance on which you are required to report is a mixture or a component of a mixture, provide the following information for each component chemical. (If the mixture composition is variable, report an average percentage of each component chemical for all formulations.)

CBI

[ ]

Component Name	Supplier Name	Average % Composition by Weight (specify precision, e.g., 45% ± 0.5%)
N/A		
		Total 100%

[ ] Mark (X) this box if you attach a continuation sheet.

2.04 State the quantity of the listed substance that your facility manufactured, imported, or processed during the 3 corporate fiscal years preceding the reporting year in descending order.

CBI

[ ] Year ending ..... [0][6] [8][7]
Mo. Year

Quantity manufactured ..... N/A kg

Quantity imported ..... N/A kg

Quantity processed ..... 80,845 kg

Year ending ..... [0][6] [8][6]
Mo. Year

Quantity manufactured ..... N/A kg

Quantity imported ..... N/A kg

Quantity processed ..... 33,686 kg

Year ending ..... [ ][ ] [ ][ ]
Mo. Year

Plant purchased 02-86

Quantity manufactured ..... N/A kg

Quantity imported ..... N/A kg

Quantity processed ..... N/A kg

2.05 Specify the manner in which you manufactured the listed substance. Circle all appropriate process types.

CBI

[ ]

N/A

Continuous process 1

Semicontinuous process 2

Batch process 3

[ ] Mark (X) this box if you attach a continuation sheet.

2.06 Specify the manner in which you processed the listed substance. Circle all appropriate process types.
CBI

[ ]

Continuous process 1

Semicontinuous process 2

Batch process ..... (3)

2.07 State your facility's name-plate capacity for manufacturing or processing the listed substance. (If you are a batch manufacturer or batch processor, do not answer this question.)
CBI

[ ]

Manufacturing capacity ..... N/A kg/yr

Processing capacity ..... U.K. kg/yr

2.08 If you intend to increase or decrease the quantity of the listed substance manufactured, imported, or processed at any time after your current corporate fiscal year, estimate the increase or decrease based upon the reporting year's production volume.
CBI

[ ]

	Manufacturing Quantity (kg)	Importing Quantity (kg)	Processing Quantity (kg)
Amount of increase	N.A.	N.A.	N.A.
Amount of decrease	N.A.	N.A.	N.A.

[ ] Mark (X) this box if you attach a continuation sheet.

2.09 For the three largest volume manufacturing or processing process types involving the listed substance, specify the number of days you manufactured or processed the listed substance during the reporting year. Also specify the average number of hours per day each process type was operated. (If only one or two operations are involved, list those.)

CBI

[__]

	Days/Year	Average Hours/Day
Process Type #1 (The process type involving the largest quantity of the listed substance.)		
Manufactured	NA	NA
Processed	260	14
Process Type #2 (The process type involving the 2nd largest quantity of the listed substance.)		
Manufactured	NA	NA
Processed	NA	NA
Process Type #3 (The process type involving the 3rd largest quantity of the listed substance.)		
Manufactured	NA	NA
Processed	NA	NA

2.10 State the maximum daily inventory and average monthly inventory of the listed substance that was stored on-site during the reporting year in the form of a bulk chemical.

CBI

[__]

Maximum daily inventory	N.A.	kg
Average monthly inventory	N.A.	kg

[__] Mark (X) this box if you attach a continuation sheet.

2.11 Related Product Types -- List any byproducts, coproducts, or impurities present with the listed substance in concentrations greater than 0.1 percent as it is manufactured, imported, or processed. The source of byproducts, coproducts, or impurities means the source from which the byproducts, coproducts, or impurities are made or introduced into the product (e.g., carryover from raw material, reaction product, etc.).

CBI

[ ]

CAS No.	Chemical Name	Byproduct, Coproduct or Impurity[1]	Concentration (%) (specify ± % precision)	Source of Byproducts, Coproducts, or Impurities
NA	NA	NA	NA	NA

[1]Use the following codes to designate byproduct, coproduct, or impurity:

B = Byproduct
C = Coproduct
I = Impurity

[ ] Mark (X) this box if you attach a continuation sheet.

2.12 Existing Product Types -- List all existing product types which you manufactured, imported, or processed using the listed substance during the reporting year. List the quantity of listed substance you use for each product type as a percentage of the total volume of listed substance used during the reporting year. Also list the quantity of listed substance used captively on-site as a percentage of the value listed under column b., and the types of end-users for each product type. (Refer to the instructions for further explanation and an example.)

CBI [ ]

a. Product Types[1]	b. % of Quantity Manufactured, Imported, or Processed	c. % of Quantity Used Captively On-Site	d. Type of End-Users[2]
B	100	100	I

[1]Use the following codes to designate product types:

A = Solvent
B = Synthetic reactant
C = Catalyst/Initiator/Accelerator/Sensitizer
D = Inhibitor/Stabilizer/Scavenger/Antioxidant
E = Analytical reagent
F = Chelator/Coagulant/Sequestrant
G = Cleanser/Detergent/Degreaser
H = Lubricant/Friction modifier/Antiwear agent
I = Surfactant/Emulsifier
J = Flame retardant
K = Coating/Binder/Adhesive and additives
L = Moldable/Castable/Rubber and additives
M = Plasticizer
N = Dye/Pigment/Colorant/Ink and additives
O = Photographic/Reprographic chemical and additives
P = Electrodeposition/Plating chemicals
Q = Fuel and fuel additives
R = Explosive chemicals and additives
S = Fragrance/Flavor chemicals
T = Pollution control chemicals
U = Functional fluids and additives
V = Metal alloy and additives
W = Rheological modifier
X = Other (specify) _____

[2]Use the following codes to designate the type of end-users:

I = Industrial
CM = Commercial
CS = Consumer
H = Other (specify) _____

[ ] Mark (X) this box if you attach a continuation sheet.

2.13 Expected Product Types -- Identify all product types which you expect to manufacture, import, or process using the listed substance at any time after your current corporate fiscal year. For each use, specify the quantity you expect to manufacture, import, or process for each use as a percentage of the total volume of listed substance used during the reporting year. Also list the quantity of listed substance used captively on-site as a percentage of the value listed under column b., and the types of end-users for each product type. (Refer to the instructions for further explanation and an example.)

CBI [ ]

a. Product Types[1]	b. % of Quantity Manufactured, Imported, or Processed	c. % of Quantity Used Captively On-Site	d. Type of End-Users[2]
B	100	100	I

[1]Use the following codes to designate product types:

A = Solvent
B = Synthetic reactant
C = Catalyst/Initiator/Accelerator/Sensitizer
D = Inhibitor/Stabilizer/Scavenger/Antioxidant
E = Analytical reagent
F = Chelator/Coagulant/Sequestrant
G = Cleanser/Detergent/Degreaser
H = Lubricant/Friction modifier/Antiwear agent
I = Surfactant/Emulsifier
J = Flame retardant
K = Coating/Binder/Adhesive and additives
L = Moldable/Castable/Rubber and additives
M = Plasticizer
N = Dye/Pigment/Colorant/Ink and additives
O = Photographic/Reprographic chemical and additives
P = Electrodeposition/Plating chemicals
Q = Fuel and fuel additives
R = Explosive chemicals and additives
S = Fragrance/Flavor chemicals
T = Pollution control chemicals
U = Functional fluids and additives
V = Metal alloy and additives
W = Rheological modifier
X = Other (specify) _____

[2]Use the following codes to designate the type of end-users:

I = Industrial
CM = Commercial
CS = Consumer
H = Other (specify) _____

[ ] Mark (X) this box if you attach a continuation sheet.

2.14 Final Product — Complete the following table for each type of final product manufactured, imported, or processed at your facility that contains the listed substance other than as an impurity.

CBI [ ]

a. Product Type[1]	b. Final Product's Physical Form[2]	c. Average % Composition of Listed Substance in Final Product	d. Type of End-Users[3]
N.A.			

[1]Use the following codes to designate product types:

A = Solvent
B = Synthetic reactant
C = Catalyst/Initiator/Accelerator/Sensitizer
D = Inhibitor/Stabilizer/Scavenger/Antioxidant
E = Analytical reagent
F = Chelator/Coagulant/Sequestrant
G = Cleanser/Detergent/Degreaser
H = Lubricant/Friction modifier/Antiwear agent
I = Surfactant/Emulsifier
J = Flame retardant
K = Coating/Binder/Adhesive and additives
L = Moldable/Castable/Rubber and additives
M = Plasticizer
N = Dye/Pigment/Colorant/Ink and additives
O = Photographic/Reprographic chemical and additives
P = Electrodeposition/Plating chemicals
Q = Fuel and fuel additives
R = Explosive chemicals and additives
S = Fragrance/Flavor chemicals
T = Pollution control chemicals
U = Functional fluids and additives
V = Metal alloy and additives
W = Rheological modifier
X = Other (specify) _____

[2]Use the following codes to designate the final product's physical form:

A = Gas
B = Liquid
C = Aqueous solution
D = Paste
E = Slurry
F1 = Powder
F2 = Crystalline solid
F3 = Granules
F4 = Other solid
G = Gel
H = Other (specify) _____

[3]Use the following codes to designate the type of end-users:

I = Industrial
CM = Commercial
CS = Consumer
H = Other (specify) _____

[ ] Mark (X) this box if you attach a continuation sheet.

2.15 Circle all applicable modes of transportation used to deliver bulk shipments of the
CBI listed substance to off-site customers.

[ ] Truck 1

Railcar 2

Barge, Vessel 3

Pipeline 4

Plane 5

Other (specify) NA 6

2.16 Customer Use -- Estimate the quantity of the listed substance used by your customers or prepared by your customers during the reporting year for use under each category
CBI of end use listed (i-iv).

[ ]

Category of End Use

i. Industrial Products

Chemical or mixture ..... NA kg/yr

Article ..... NA kg/yr

ii. Commercial Products

Chemical or mixture ..... NA kg/yr

Article ..... NA kg/yr

iii. Consumer Products

Chemical or mixture ..... NA kg/yr

Article ..... NA kg/yr

iv. Other

Distribution (excluding export) ..... NA kg/yr

Export ..... NA kg/yr

Quantity of substance consumed as reactant ..... NA kg/yr

Unknown customer uses ..... NA kg/yr

[ ] Mark (X) this box if you attach a continuation sheet.

SECTION 3 PROCESSOR RAW MATERIAL IDENTIFICATION

PART A GENERAL DATA

3.01 Specify the quantity purchased and the average price paid for the listed substance for each major source of supply listed. Product trades are treated as purchases.
CBI The average price is the market value of the product that was traded for the listed substance.
[ ]

Source of Supply	Quantity (kg)	Average Price ($/kg)
The listed substance was manufactured on-site.	NA	
The listed substance was transferred from a different company site.	NA	
The listed substance was purchased directly from a manufacturer or importer.	81,637	$1.74 to 2.07*
The listed substance was purchased from a distributor or repackager.	NA	
The listed substance was purchased from a mixture producer.	NA	

*Fluctuating with market conditions

3.02 Circle all applicable modes of transportation used to deliver the listed substance to your facility.
CBI
[ ]

Truck ..... (1)

Railcar 2

Barge, Vessel 3

Pipeline 4

Plane 5

Other (specify) _____ 6

[ ] Mark (X) this box if you attach a continuation sheet.

3.03 a. Circle all applicable containers used to transport the listed substance to your facility.

CBI

[ ]

Bags 1

Boxes 2

Free standing tank cylinders 3

Tank rail cars 4

Hopper cars 5

Tank trucks 6

Hopper trucks 7

Drums 8

Pipeline 9

Other (specify) _____ 10

b. If the listed substance is transported in pressurized tank cylinders, tank rail cars, or tank trucks, state the pressure of the tanks.

Tank cylinders ..... NA mmHg

Tank rail cars ..... NA mmHg

Tank trucks ..... NA mmHg

[ ] Mark (X) this box if you attach a continuation sheet.

PART B RAW MATERIAL IN THE FORM OF A MIXTURE

3.04 If you obtain the listed substance in the form of a mixture, list the trade name(s) of the mixture, the name of its supplier(s) or manufacturer(s), an estimate of the average percent composition by weight of the listed substance in the mixture, and the amount of mixture processed during the reporting year.

CBI

[ ]

Trade Name	Supplier or Manufacturer	Average % Composition by Weight (specify ± % precision)	Amount Processed (kg/yr)
NA			

[ ] Mark (X) this box if you attach a continuation sheet.

PART C RAW MATERIAL VOLUME

3.05 CBI [ ] State the quantity of the listed substance used as a raw material during the reporting year in the form of a class I chemical, class II chemical, or polymer, and the percent composition, by weight, of the listed substance.

	Quantity Used (kg/yr)	% Composition by Weight of Listed Substance in Raw Material (specify ± % precision)
Class I chemical	81,637	100% ± 1%
	NA	NA
	NA	NA
Class II chemical	NA	NA
	NA	NA
	NA	NA
Polymer	NA	NA
	NA	NA
	NA	NA

[ ] Mark (X) this box if you attach a continuation sheet.

SECTION 4 PHYSICAL/CHEMICAL PROPERTIES

General Instructions:

If you are reporting on a mixture as defined in the glossary, reply to questions in Section 4 that are inappropriate to mixtures by stating "NA -- mixture."

For questions 4.06-4.15, if you possess any hazard warning statement, label, MSDS, or other notice that addresses the information requested, you may submit a copy or reasonable facsimile in lieu of answering those questions which it addresses.

PART A PHYSICAL/CHEMICAL DATA SUMMARY

4.01 Specify the percent purity for the three major[1] technical grade(s) of the listed substance as it is manufactured, imported, or processed. Measure the purity of the substance in the final product form for manufacturing activities, at the time you import the substance, or at the point you begin to process the substance.

CBI [ ]

	Manufacture	Import	Process
Technical grade #1	NA % purity	NA % purity	99.9 % purity
Technical grade #2	NA % purity	NA % purity	NA % purity
Technical grade #3	NA % purity	NA % purity	NA % purity

[1]Major = Greatest quantity of listed substance manufactured, imported or processed.

4.02 Submit your most recently updated Material Safety Data Sheet (MSDS) for the listed substance, and for every formulation containing the listed substance. If you possess an MSDS that you developed and an MSDS developed by a different source, submit your version. Indicate whether at least one MSDS has been submitted by circling the appropriate response.

Yes ..... (1)

No 2

Indicate whether the MSDS was developed by your company or by a different source.

Your company 1

Another source ..... (2)

[ ] Mark (X) this box if you attach a continuation sheet.

4.03 Submit a copy or reasonable facsimile of any hazard information (other than an MSDS) that is provided to your customers/users regarding the listed substance or any formulation containing the listed substance. Indicate whether this information has been submitted by circling the appropriate response.

Yes ..... NA 1

No 2

4.04 For each activity that uses the listed substance, circle all the applicable number(s) corresponding to each physical state of the listed substance during the activity listed. Physical states for importing and processing activities are determined at the time you import or begin to process the listed substance. Physical states for manufacturing, storage, disposal and transport activities are determined using the final state of the product.

CBI

[ ]

	Physical State				
Activity	Solid	Slurry	Liquid	Liquified Gas	Gas
Manufacture	1	2	3	4	5
Import	1	2	3	4	5
Process	1	2	3	4	5
Store	1	2	3	4	5
Dispose	1	2	3	4	5
Transport	1	2	3	4	5

[ ] Mark (X) this box if you attach a continuation sheet.

4.05 Particle Size -- If the listed substance exists in particulate form during any of the following activities, indicate for each applicable physical state the size and the percentage distribution of the listed substance by activity. Do not include particles ≥10 microns in diameter. Measure the physical state and particle sizes for importing and processing activities at the time you import or begin to process the listed substance. Measure the physical state and particle sizes for manufacturing storage, disposal and transport activities using the final state of the product.

CBI

[__]

Physical State		Manufacture	Import	Process	Store	Dispose	Transport
Dust	<1 micron	NA	NA	NA	NA	NA	NA
	1 to <5 microns	"	"	"	"	"	"
	5 to <10 microns	"	"	"	"	"	"
Powder	<1 micron	"	"	"	"	"	"
	1 to <5 microns	"	"	"	"	"	"
	5 to <10 microns	"	"	"	"	"	"
Fiber	<1 micron	"	"	"	"	"	"
	1 to <5 microns	"	"	"	"	"	"
	5 to <10 microns	"	"	"	"	"	"
Aerosol	<1 micron	"	"	"	"	"	"
	1 to <5 microns	"	"	"	"	"	"
	5 to <10 microns	"	"	"	"	"	"

[__] Mark (X) this box if you attach a continuation sheet.

SECTION 5 ENVIRONMENTAL FATE

PART A RATE CONSTANTS AND TRANSFORMATION PRODUCTS

5.01 Indicate the rate constants for the following transformation processes.

a. Photolysis:

Absorption spectrum coefficient (peak) .... U.K. (1/M cm) at _____ nm

Reaction quantum yield, ϕ ..... U.K. _____ at _____ nm

Direct photolysis rate constant, k_p, at ... U.K. 1/hr _____ latitude

b. Oxidation constants at 25°C:

For $^1O_2$ (singlet oxygen), k_{ox} ..... U.K. 1/M hr

For RO_2 (peroxy radical), k_{ox} ..... U.K. 1/M hr

c. Five-day biochemical oxygen demand, BOD_5 ... U.K. mg/l

d. Biotransformation rate constant:

For bacterial transformation in water, k_b... U.K. 1/hr

Specify culture ..... U.K.

e. Hydrolysis rate constants:

For base-promoted process, k_B ..... U.K. 1/M hr

For acid-promoted process, k_A ..... U.K. 1/M hr

For neutral process, k_N ..... U.K. 1/hr

f. Chemical reduction rate (specify conditions) U.K.

g. Other (such as spontaneous degradation) ... U.K.

[ ] Mark (X) this box if you attach a continuation sheet.

PART B PARTITION COEFFICIENTS

5.02 a. Specify the half-life of the listed substance in the following media.

Media	Half-life (specify units)
Groundwater	U.K.
Atmosphere	U.K.
Surface water	U.K.
Soil	U.K.

b. Identify the listed substance's known transformation products that have a half-life greater than 24 hours.

CAS No.	Name	Half-life (specify units)		Media
U.K.	U.K.	U.K.	in	
			in	
			in	
			in	

5.03 Specify the octanol-water partition coefficient, K_{ow} ... U.K. at 25°C

Method of calculation or determination ..... _____

5.04 Specify the soil-water partition coefficient, K_d ..... U.K. at 25°C

Soil type ..... _____

5.05 Specify the organic carbon-water partition coefficient, K_{oc} ..... U.K. at 25°C

5.06 Specify the Henry's Law Constant, H ..... U.K. atm-m^3/mole

[ ] Mark (X) this box if you attach a continuation sheet.

5.07 List the bioconcentration factor (BCF) of the listed substance, the species for which it was determined, and the type of test used in deriving the BCF.

Bioconcentration Factor	Species	Test[1]
U.K.	U.K.	U.K.

[1]Use the following codes to designate the type of test:

F = Flowthrough
S = Static

[ ] Mark (X) this box if you attach a continuation sheet.

6.04 For each market listed below, state the quantity sold and the total sales value of the listed substance sold or transferred in bulk during the reporting year.

CBI

[ ]

Market	Quantity Sold or Transferred (kg/yr)	Total Sales Value ($/yr)
Retail sales	N.A.	N.A.
Distribution -- Wholesalers	"	"
Distribution -- Retailers	"	"
Intra-company transfer	"	"
Repackagers	"	"
Mixture producers	"	"
Article producers	"	"
Other chemical manufacturers or processors	"	"
Exporters	"	"
Other (specify)		
	"	"

6.05 Substitutes -- List all known commercially feasible substitutes that you know exist for the listed substance and state the cost of each substitute. A commercially feasible substitute is one which is economically and technologically feasible to use in your current operation, and which results in a final product with comparable performance in its end uses.

CBI

[ ]

Substitute	Cost ($/kg)
U.K.	U.K.

[ ] Mark (X) this box if you attach a continuation sheet.

SECTION 7 MANUFACTURING AND PROCESSING INFORMATION

General Instructions:

For questions 7.04-7.06, provide a separate response for each process block flow diagram provided in questions 7.01, 7.02, and 7.03. Identify the process type from which the information is extracted.

PART A MANUFACTURING AND PROCESSING PROCESS TYPE DESCRIPTION

7.01 In accordance with the instructions, provide a process block flow diagram showing the major (greatest volume) process type involving the listed substance.

CBI

[ ] Process type ..... Rebond Carpet Pad Manufacturing

See pg. 42a

[X] Mark (X) this box if you attach a continuation sheet.

7.03 In accordance with the instructions, provide a process block flow diagram showing all process emission streams and emission points that contain the listed substance and which, if combined, would total at least 90 percent of all facility emissions if not treated before emission into the environment. If all such emissions are released from one process type, provide a process block flow diagram using the instructions for question 7.01. If all such emissions are released from more than one process type, provide a process block flow diagram showing each process type as a separate block.

CBI

[ ] Process type ..... Rebond Carpet Pad Manufacturing

See pg 44a

[X] Mark (X) this box if you attach a continuation sheet.

7.04 Describe the typical equipment types for each unit operation identified in your process block flow diagram(s). If a process block flow diagram is provided for more than one process type, photocopy this question and complete it separately for each process type.

CBI

[ ] Process type ..... Rebond Carpet Pad Manufacturing

Unit Operation ID Number	Typical Equipment Type	Operating Temperature Range (°C)	Operating Pressure Range (mm Hg)	Vessel Composition
7.1	MIX Tanks	ambient	atmospheric	steel
7.3	Pump	ambient	2068-2844	carbon steel
7.4	TDI Bulk tank	ambient	NA	steel
7.5	Polyol Bulk tank	ambient	155	steel
7.6	Blender	ambient	NA	cold roll steel
7.9, 7.11	Granulator	ambient	NA	cold roll steel
7.14	Compression Mold	127	259	steel
7.13	Pump	ambient	2068-2844	carbon steel
7.17	Peeler	ambient	NA	steel
7.18	Laminator	204-232	atmospheric	steel
7.20	Pump	ambient	2068-2844	carbon steel

[ ] Mark (X) this box if you attach a continuation sheet.

7.05 Describe each process stream identified in your process block flow diagram(s). If a process block flow diagram is provided for more than one process type, photocopy this question and complete it separately for each process type.

CBI

[ ] Process type ..... Rebond Carpet Pad Manufacturing

Process Stream ID Code	Process Stream Description	Physical State[1]	Stream Flow (kg/yr)
7N, 7U	Polyol	OL	163,274
7G, 7I	TDI	OL	81,637
7E, 7F, 7D	Binder (Polyol and TDI)	OL	244,911
7H, 7J, 7K, 7L, 7M, 7Q	Scrap Foam	SO	2,204,186
7R, 7S, 7T	Rebond Carpet Pad	SO	2,449,107

[1]Use the following codes to designate the physical state for each process stream:

GC = Gas (condensible at ambient temperature and pressure)
GU = Gas (uncondensible at ambient temperature and pressure)
SO = Solid
SY = Sludge or slurry
AL = Aqueous liquid
OL = Organic liquid
IL = Immiscible liquid (specify phases, e.g., 90% water, 10% toluene)

[ ] Mark (X) this box if you attach a continuation sheet.

7.06 Characterize each process stream identified in your process block flow diagram(s). If a process block flow diagram is provided for more than one process type, photocopy this question and complete it separately for each process type. (Refer to the instructions for further explanation and an example.)

CBI

[ ] Process type .....

a. Process Stream ID Code	b. Known Compounds[1]	c. Concentrations[2,3] (% or ppm)	d. Other Expected Compounds	e. Estimated Concentrations (% or ppm)
7G, 7I, 7U	Polyol	100%	NA	NA
7G, 7F	TDI	100%	NA	NA
7H, 7J, 7K, 7L, 7M	Scrap Foam	100%	NA	NA
7R, 7S, 7T	Carpet Padding	100%	NA	NA

7.06 continued below

[ ] Mark (X) this box if you attach a continuation sheet.

7.06 (continued)

[1]For each additive package introduced into a process stream, specify the compounds that are present in each additive package, and the concentration of each component. Assign an additive package number to each additive package and list this number in column b. (Refer to the instructions for further explanation and an example. Refer to the glossary for the definition of additive package.)

Additive Package Number	Components of Additive Package	Concentrations (% or ppm)
1	NA	NA
2	NA	NA
3	NA	NA
4	NA	NA
5	NA	NA

[2]Use the following codes to designate how the concentration was determined:

A = Analytical result
E = Engineering judgement/calculation

[3]Use the following codes to designate how the concentration was measured:

V = Volume
W = Weight

[ ] Mark (X) this box if you attach a continuation sheet.

PART A RESIDUAL TREATMENT PROCESS DESCRIPTION

8.01 In accordance with the instructions, provide a residual treatment block flow diagram which describes the treatment process used for residuals identified in question 7.01.

CBI

[ ] Process type ..... Rebond Carpet Pad Manufacturing

See Residual Treatment Flow Diagram, page 50a

[X] Mark (X) this box if you attach a continuation sheet.

PART B RESIDUAL GENERATION AND CHARACTERIZATION

8.05 Characterize each process stream identified in your residual treatment block flow diagram(s). If a residual treatment block flow diagram is provided for more than one process type, photocopy this question and complete it separately for each process type. (Refer to the instructions for further explanation and an example.)

CBI

[ ] Process type ..... Rebond Carpet Pad Manufacturing

a. Stream ID Code	b. Type of Hazardous Waste[1]	c. Physical State of Residual[2]	d. Known Compounds[3]	e. Concentrations (% or ppm)[4,5,6]	f. Other Expected Compounds	g. Estimated Concentrations (% or ppm)
7Q	T	G4	TDI	BDL (A)(V)(1)	NA	NA

8.05 continued below

[ ] Mark (X) this box if you attach a continuation sheet.

8.05 (continued)

[3]For each additive package introduced into a process stream, specify the compounds that are present in each additive package, and the concentration of each component. Assign an additive package number to each additive package and list this number in column d. (Refer to the instructions for further explanation and an example. Refer to the glossary for the definition of additive package.)

Additive Package Number	Components of Additive Package	Concentrations (% or ppm)
1	NA	
2		
3		
4		
5		

[4]Use the following codes to designate how the concentration was determined:

A = Analytical result
E = Engineering judgement/calculation

8.05 continued below

[ ] Mark (X) this box if you attach a continuation sheet.

8.05 (continued)

[5]Use the following codes to designate how the concentration was measured:

V = Volume
W = Weight

[6]Specify the analytical test methods used and their detection limits in the table below. Assign a code to each test method used and list those codes in column e.

Code	Method	Detection Limit (± ug/l)
1	NA	
2		
3		
4		
5		
6		

[ ] Mark (X) this box if you attach a continuation sheet.

8.06 Characterize each process stream identified in your residual treatment block flow diagram(s). If a residual treatment block flow diagram is provided for more than one process type, photocopy this question and complete it separately for each process type. (Refer to the instructions for further explanation and an example.)

CBI

[ ] Process type ..... Rebond Carpet Pad Manufacturing

a. Stream ID Code	b. Waste Description Code[1]	c. Management Method Code[2]	d. Residual Quantities (kg/yr)	e. Management of Residual (%) On-Site	e. Management of Residual (%) Off-Site	f. Costs for Off-Site Management (per kg)	g. Changes in Management Methods
7Q	B91	M5a	4.1	NA	NA	NA	NA

[1]Use the codes provided in Exhibit 8-1 to designate the waste descriptions

[2]Use the codes provided in Exhibit 8-2 to designate the management methods

[ ] Mark (X) this box if you attach a continuation sheet.

8.22 Describe the combustion chamber design parameters for each of the three largest (by capacity) incinerators that are used on-site to burn the residuals identified in your process block or residual treatment block flow diagram(s).

CBI

[__]

Incinerator	Combustion Chamber Temperature (°C)		Location of Temperature Monitor		Residence Time In Combustion Chamber (seconds)	
	Primary	Secondary	Primary	Secondary	Primary	Secondary
1	N/A					
2	N/A					
3	N/A					

Indicate if Office of Solid Waste survey has been submitted in lieu of response by circling the appropriate response.

Yes 1

No ..... (2)

8.23 Complete the following table for the three largest (by capacity) incinerators that are used on-site to burn the residuals identified in your process block or residual treatment block flow diagram(s).

CBI

[__]

Incinerator	Air Pollution Control Device[1]	Types of Emissions Data Available
1	N/A	N/A
2	N/A	N/A
3	N/A	N/A

Indicate if Office of Solid Waste survey has been submitted in lieu of response by circling the appropriate response.

Yes 1

No ..... (2)

[1]Use the following codes to designate the air pollution control device:

S = Scrubber (include type of scrubber in parenthesis)
E = Electrostatic precipitator
O = Other (specify) _____

[__] Mark (X) this box if you attach a continuation sheet.

PART A EMPLOYMENT AND POTENTIAL EXPOSURE PROFILE

9.01 Mark (X) the appropriate column to indicate whether your company maintains records on the following data elements for hourly and salaried workers. Specify for each data element the year in which you began maintaining records and the number of years the records for that data element are maintained. (Refer to the instructions for further explanation and an example.)

CBI

[ ]

Data Element	Data are Maintained for: Hourly Workers	Salaried Workers	Year in Which Data Collection Began	Number of Years Records Are Maintained
Date of hire	X	X	1986	3
Age at hire	X	X	1986	3
Work history of individual before employment at your facility	X	X	1986	3
Sex	X	X	1986	3
Race	X	X	1986	3
Job titles	X	X	1986	3
Start date for each job title	X	X	1986	3
End date for each job title	X	X	1986	3
Work area industrial hygiene monitoring data	NA	NA	NA	NA
Personal employee monitoring data	NA	NA	NA	NA
Employee medical history	X	X	1986	3
Employee smoking history	NA	NA	1986	3
Accident history	X	X	1986	3
Retirement date	X	X	1986	3
Termination date	X	X	1986	3
Vital status of retirees	NA	NA	NA	NA
Cause of death data	NA	NA	NA	NA

[ ] Mark (X) this box if you attach a continuation sheet.

9.02 In accordance with the instructions, complete the following table for each activity in which you engage.

CBI

[ ]

a. Activity	b. Process Category	c. Yearly Quantity (kg)	d. Total Workers	e. Total Worker-Hours
Manufacture of the listed substance	Enclosed	NA	NA	NA
	Controlled Release	NA	NA	NA
	Open	NA	NA	NA
On-site use as reactant	Enclosed	NA	NA	NA
	Controlled Release	180,042	5	11,250
	Open	NA	NA	NA
On-site use as nonreactant	Enclosed	NA	NA	NA
	Controlled Release	NA	NA	NA
	Open	NA	NA	NA
On-site preparation of products	Enclosed	NA	NA	NA
	Controlled Release	NA	NA	NA
	Open	NA	NA	NA

[ ] Mark (X) this box if you attach a continuation sheet.

9.03 **Provide a descriptive job title for each labor category at your facility that encompasses workers who may potentially come in contact with or be exposed to the listed substance.**

CBI

[ ]

Labor Category	Descriptive Job Title
A	Foam Production Supervisor
B	Molder, Foam Rubber
C	Laborer, General (plastics)
D	
E	
F	
G	
H	
I	
J	

[ ] Mark (X) this box if you attach a continuation sheet.

9.04 In accordance with the instructions, provide your process block flow diagram(s) and indicate associated work areas.

CBI

[ ] **Process type .....** Rebond Carpet Pad Manufacturing

See diagram, pg. 91a

[ ] **Mark (X) this box if you attach a continuation sheet.**

9.05 Describe the various work area(s) shown in question 9.04 that encompass workers who may potentially come in contact with or be exposed to the listed substance. Add any additional areas not shown in the process block flow diagram in question 7.01 or 7.02. Photocopy this question and complete it separately for each process type.

CBI

[ ] Process type ..... Rebond Carpet Pad Manufacturing

Work Area ID	Description of Work Areas and Worker Activities
1	Pumping & blending equipment- Rebond crew monitors flow
2	Foam shredding, rebond process equipment - operator runs shredder, rebond crew operates rebond system.
3	Rebond peeler, laminator & storage area - operators run peeler and laminator, production workers package, etc.- no exposure
4	
5	
6	
7	
8	
9	
10	

[ ] Mark (X) this box if you attach a continuation sheet.

9.06 Complete the following table for each work area identified in question 9.05, and for each labor category at your facility that encompasses workers who may potentially come in contact with or be exposed to the listed substance. Photocopy this question and complete it separately for each process type and work area.

CBI

[ ] Process type ..... Rebond Carpet Pad Manufacturing

Work area 1

Labor Category	Number of Workers Exposed	Mode of Exposure (e.g., direct skin contact)	Physical State of Listed Substance[1]	Average Length of Exposure Per Day[2]	Number of Days per Year Exposed
A	1	inhalation	GU	A	263
B	2	inhalation	GU	A	263

[1]Use the following codes to designate the physical state of the listed substance at the point of exposure:

GC = Gas (condensible at ambient temperature and pressure)
GU = Gas (uncondensible at ambient temperature and pressure; includes fumes, vapors, etc.)
SO = Solid
SY = Sludge or slurry
AL = Aqueous liquid
OL = Organic liquid
IL = Immiscible liquid (specify phases, e.g., 90% water, 10% toluene)

[2]Use the following codes to designate average length of exposure per day:

A = 15 minutes or less
B = Greater than 15 minutes, but not exceeding 1 hour
C = Greater than one hour, but not exceeding 2 hours
D = Greater than 2 hours, but not exceeding 4 hours
E = Greater than 4 hours, but not exceeding 8 hours
F = Greater than 8 hours

[ ] Mark (X) this box if you attach a continuation sheet.

9.06 Complete the following table for each work area identified in question 9.05, and for each labor category at your facility that encompasses workers who may potentially come in contact with or be exposed to the listed substance. Photocopy this question
CBI and complete it separately for each process type and work area.

[ ] Process type ..... Rebond Carpet Pad Manufacturing

Work area 2

Labor Category	Number of Workers Exposed	Mode of Exposure (e.g., direct skin contact)	Physical State of Listed Substance[1]	Average Length of Exposure Per Day[2]	Number of Days per Year Exposed
A	1	inhalation	GU	E	263
B	2	inhalation	GU	E	263
C	2	inhalation	GU	E	263

[1]Use the following codes to designate the physical state of the listed substance at the point of exposure:

GC = Gas (condensible at ambient temperature and pressure)
GU = Gas (uncondensible at ambient temperature and pressure; includes fumes, vapors, etc.)
SO = Solid
SY = Sludge or slurry
AL = Aqueous liquid
OL = Organic liquid
IL = Immiscible liquid (specify phases, e.g., 90% water, 10% toluene)

[2]Use the following codes to designate average length of exposure per day:

A = 15 minutes or less
B = Greater than 15 minutes, but not exceeding 1 hour
C = Greater than one hour, but not exceeding 2 hours
D = Greater than 2 hours, but not exceeding 4 hours
E = Greater than 4 hours, but not exceeding 8 hours
F = Greater than 8 hours

[ ] Mark (X) this box if you attach a continuation sheet.

9.06 Complete the following table for each work area identified in question 9.05, and for each labor category at your facility that encompasses workers who may potentially come in contact with or be exposed to the listed substance. Photocopy this question
CBI and complete it separately for each process type and work area.

[__] Process type ..... Rebond Carpet Pad Manufacturing

Work area 3

Labor Category	Number of Workers Exposed	Mode of Exposure (e.g., direct skin contact)	Physical State of Listed Substance[1]	Average Length of Exposure Per Day[2]	Number of Days per Year Exposed
NA	NA	NA	NA	NA	NA

[1]Use the following codes to designate the physical state of the listed substance at the point of exposure:

GC = Gas (condensible at ambient temperature and pressure)
GU = Gas (uncondensible at ambient temperature and pressure; includes fumes, vapors, etc.)
SO = Solid
SY = Sludge or slurry
AL = Aqueous liquid
OL = Organic liquid
IL = Immiscible liquid (specify phases, e.g., 90% water, 10% toluene)

[2]Use the following codes to designate average length of exposure per day:

A = 15 minutes or less
B = Greater than 15 minutes, but not exceeding 1 hour
C = Greater than one hour, but not exceeding 2 hours
D = Greater than 2 hours, but not exceeding 4 hours
E = Greater than 4 hours, but not exceeding 8 hours
F = Greater than 8 hours

[__] Mark (X) this box if you attach a continuation sheet.

9.07 For each labor category represented in question 9.06, indicate the 8-hour Time Weighted Average (TWA) exposure levels and the 15-minute peak exposure levels. Photocopy this question and complete it separately for each process type and work area.

CBI

[ ] Process type ..... Rebond Carpet Pad Manufacturing

Work area 1

Labor Category	8-hour TWA Exposure Level (ppm, mg/m^3, other-specify)	15-Minute Peak Exposure Level (ppm, mg/m^3, other-specify)
A	UK	UK
B	UK	UK

[ ] Mark (X) this box if you attach a continuation sheet.

9.07 For each labor category represented in question 9.06, indicate the 8-hour Time Weighted Average (TWA) exposure levels and the 15-minute peak exposure levels. Photocopy this question and complete it separately for each process type and work area.

CBI

[ ] Process type ..... Rebond Carpet Pad Manufacturing

Work area 2

Labor Category	8-hour TWA Exposure Level (ppm, mg/m^3, other-specify)	15-Minute Peak Exposure Level (ppm, mg/m^3, other-specify)
A	UK	UK
B	UK	UK
C	UK	UK

[ ] Mark (X) this box if you attach a continuation sheet.

9.07 For each labor category represented in question 9.06, indicate the 8-hour Time Weighted Average (TWA) exposure levels and the 15-minute peak exposure levels. Photocopy this question and complete it separately for each process type and work area.

CBI

[ ] Process type ..... Rebond CArpet Pad Manufacturing

Work area 3

Labor Category	8-hour TWA Exposure Level (ppm, mg/m^3, other-specify)	15-Minute Peak Exposure Level (ppm, mg/m^3, other-specify)
NA	NA	NA

[ ] Mark (X) this box if you attach a continuation sheet.

PART B WORK PLACE MONITORING PROGRAM

9.08 If you monitor worker exposure to the listed substance, complete the following table.

CBI

[__]

Sample/Test	Work Area ID	Testing Frequency (per year)	Number of Samples (per test)	Who Samples[1]	Analyzed In-House (Y/N)	Number of Years Records Maintained
Personal breathing zone	NA	NA	NA	NA	NA	NA
General work area (air)	NA	NA	NA	NA	NA	NA
Wipe samples	NA	NA	NA	NA	NA	NA
Adhesive patches	NA	NA	NA	NA	NA	NA
Blood samples	NA	NA	NA	NA	NA	NA
Urine samples	NA	NA	NA	NA	NA	NA
Respiratory samples	NA	NA	NA	NA	NA	NA
Allergy tests	NA	NA	NA	NA	NA	NA
Other (specify) _____	NA	NA	NA	NA	NA	NA
Other (specify) _____						
Other (specify) _____						

[1]Use the following codes to designate who takes the monitoring samples:

A = Plant industrial hygienist
B = Insurance carrier
C = OSHA consultant
D = Other (specify) _____

[__] Mark (X) this box if you attach a continuation sheet.

9.09 For each sample type identified in question 9.08, describe the type of sampling and analytical methodology used for each type of sample.

CBI

NA

[__]

Sample Type	Sampling and Analytical Methodology

9.10 If you conduct personal and/or ambient air monitoring for the listed substance, specify the following information for each equipment type used.

CBI

NA

[__]

Equipment Type[1]	Detection Limit[2]	Manufacturer	Averaging Time (hr)	Model Number

[1]Use the following codes to designate personal air monitoring equipment types:

A = Passive dosimeter
B = Detector tube
C = Charcoal filtration tube with pump
D = Other (specify) _____

Use the following codes to designate ambient air monitoring equipment types:

E = Stationary monitors located within work area
F = Stationary monitors located within facility
G = Stationary monitors located at plant boundary
H = Mobile monitoring equipment (specify) _____
I = Other (specify) _____

[2]Use the following codes to designate detection limit units:

A = ppm
B = Fibers/cubic centimeter (f/cc)
C = Micrograms/cubic meter (μ/m^3)

[__] Mark (X) this box if you attach a continuation sheet.

9.11 If you conduct routine medical tests for monitoring the health effects of exposure to the listed substance, specify the type and frequency of the tests.

CBI

[ ] Test Description	Frequency (weekly, monthly, yearly, etc.)
NA	

[ ] Mark (X) this box if you attach a continuation sheet.

PART C ENGINEERING CONTROLS

9.12 Describe the engineering controls that you use to reduce or eliminate worker exposure to the listed substance. Photocopy this question and complete it separately for each process type and work area.

CBI

[ ] Process type ..... Rebond Carpet Pad Manufacturing

Work area 1

Engineering Controls	Used (Y/N)	Year Installed	Upgraded (Y/N)	Year Upgraded
Ventilation:				
Local exhaust	N			
General dilution	N			
Other (specify)				
	N			
Vessel emission controls	Y	UK	UK	UK
Mechanical loading or packaging equipment	Y	UK	UK	UK
Other (specify)				
	N			

[ ] Mark (X) this box if you attach a continuation sheet.

PART C ENGINEERING CONTROLS

9.12 Describe the engineering controls that you use to reduce or eliminate worker exposure to the listed substance. Photocopy this question and complete it separately for each process type and work area.

CBI

[ ] Process type ..... Rebond Carpet Pad Manufacturing

Work area 2

Engineering Controls	Used (Y/N)	Year Installed	Upgraded (Y/N)	Year Upgraded
Ventilation:				
Local exhaust	Y	UK	UK	UK
General dilution	N			
Other (specify)				
	N			
Vessel emission controls	N			
Mechanical loading or packaging equipment	N			
Other (specify)				
	N			

[ ] Mark (X) this box if you attach a continuation sheet.

9.13 Describe all equipment or process modifications you have made within the 3 years prior to the reporting year that have resulted in a reduction of worker exposure to the listed substance. For each equipment or process modification described, state the percentage reduction in exposure that resulted. Photocopy this question and complete it separately for each process type and work area.

CBI

[__] Process type ..... Rebond Carpet Pad Manufacturing

Work area 1-3

Equipment or Process Modification	Reduction in Worker Exposure Per Year (%)
NA	NA

[__] Mark (X) this box if you attach a continuation sheet.

PART D PERSONAL PROTECTIVE AND SAFETY EQUIPMENT

9.14 Describe the personal protective and safety equipment that your workers wear or use in each work area in order to reduce or eliminate their exposure to the listed substance. Photocopy this question and complete it separately for each process type and work area.

CBI

[ ] Process type ..... Rebond Carpet Pad Manufacturing

Work area 1

Equipment Types	Wear or Use (Y/N)
Respirators	N
Safety goggles/glasses	Y
Face shields	Y
Coveralls	N
Bib aprons	N
Chemical-resistant gloves	Y
Other (specify)	

[ ] Mark (X) this box if you attach a continuation sheet.

9.15 If workers use respirators when working with the listed substance, specify for each process type, the work areas where the respirators are used, the type of respirators used, the average usage, whether or not the respirators were fit tested, and the type and frequency of the fit tests. Photocopy this question and complete it separately for each process type.

CBI

[ ] Process type ..... Rebond Carpet Pad Manufacturing

Work Area	Respirator Type	Average Usage[1]	Fit Tested (Y/N)	Type of Fit Test[2]	Frequency of Fit Tests (per year)
NA					

[1]Use the following codes to designate average usage:

A = Daily
B = Weekly
C = Monthly
D = Once a year
E = Other (specify) _____

[2]Use the following codes to designate the type of fit test:

QL = Qualitative
QT = Quantitative

[ ] Mark (X) this box if you attach a continuation sheet.

PART E WORK PRACTICES

9.19 **Describe all of the work practices and administrative controls used to reduce or eliminate worker exposure to the listed substance (e.g., restrict entrance only to authorized workers, mark areas with warning signs, insure worker detection and monitoring practices, provide worker training programs, etc.). Photocopy this question and complete it separately for each process type and work area.**

CBI

[ ]

Process type ..... Rebond Carpet Pad Manufacturing

Work area ..... 1 - 3

1. All personnel have been given hazard communication training.
2. Placards posted in all areas, and on TDI tanks.
3. Access to process area is limited.

9.20 Indicate (X) how often you perform each housekeeping task used to clean up routine leaks or spills of the listed substance. Photocopy this question and complete it separately for each process type and work area.

Process type ..... Rebond Carpet Pad Manufacturing

Work area ..... 1 - 3

Housekeeping Tasks	Less Than Once Per Day	1-2 Times Per Day	3-4 Times Per Day	More Than 4 Times Per Day
Sweeping	NA	NA	NA	NA
Vacuuming	NA	NA	NA	NA
Water flushing of floors	NA	NA	NA	NA
Other (specify)				
Flushed with water/ amine mixture and absorbed	X	NA	NA	NA

Note: There are no routine leaks or spills, only non-routine, and none occurred during the reporting year.

[ ] Mark (X) this box if you attach a continuation sheet.

9.21 Do you have a written medical action plan for responding to routine or emergency exposure to the listed substance?

Routine exposure NA

Yes 1

No 2

Emergency exposure NA

Yes 1

No 2

If yes, where are copies of the plan maintained?

Routine exposure: _____

Emergency exposure: _____

9.22 Do you have a written leak and spill cleanup plan that addresses the listed substance? Circle the appropriate response.

Yes ..... (1)

No 2

If yes, where are copies of the plan maintained? Main Office

Has this plan been coordinated with state or local government response organizations? Circle the appropriate response.

Yes ..... (1)

No 2

9.23 Who is responsible for monitoring worker safety at your facility? Circle the appropriate response.

Plant safety specialist ..... (1)

Insurance carrier 2

OSHA consultant 3

Other (specify) _____ 4

[ ] Mark (X) this box if you attach a continuation sheet.

SECTION 10 ENVIRONMENTAL RELEASE

General Instructions:

Complete Part E (questions 10.23-10.35) for each non-routine release involving the listed substance that occurred during the reporting year. Report on all releases that are equal to or greater than the listed substance's reportable quantity value, RQ, unless the release is federally permitted as defined in 42 U.S.C. 9601, or is specifically excluded under the definition of release as defined in 40 CFR 302.3(22). Reportable quantities are codified in 40 CFR Part 302. If the listed substance is not a hazardous substance under the Comprehensive Environmental Response, Compensation, and Liability Act of 1980 (CERCLA) and, thus, does not have an RQ, then report releases that exceed 2,270 kg. If such a substance however, is designated as a CERCLA hazardous substance, then report those releases that are equal to or greater than the RQ. The facility may have answered these questions or similar questions under the Agency's Accidental Release Information Program and may already have this information readily available. Assign a number to each release and use this number throughout this part to identify the release. Releases over more than a 24-hour period are not single releases, i.e., the release of a chemical substance equal to or greater than an RQ must be reported as a separate release for each 24-hour period the release exceeds the RQ.

For questions 10.25-10.35, answer the questions for each release identified in question 10.23. Photocopy these questions and complete them separately for each release.

PART A GENERAL INFORMATION

10.01 Where is your facility located? Circle all appropriate responses.

CBI

[__] Industrial area ..... (1)

Urban area 2

Residential area 3

Agricultural area 4

Rural area ..... (5)

Adjacent to a park or a recreational area 6

Within 1 mile of a navigable waterway 7

Within 1 mile of a school, university, hospital, or nursing home facility 8

Within 1 mile of a non-navigable waterway 9

Other (specify) _____ 10

[__] Mark (X) this box if you attach a continuation sheet.

10.02 Specify the exact location of your facility (from central point where process unit is located) in terms of latitude and longitude or Universal Transverse Mercader (UTM) coordinates.

Latitude ..... 34 ° 53 ' 02 "

Longitude ..... 85 ° 48 ' 02 "

UTM coordinates ..... Zone _____, Northing _____, Easting _____

10.03 If you monitor meteorological conditions in the vicinity of your facility, provide the following information.

Average annual precipitation ..... UK inches/year

Predominant wind direction ..... UK

10.04 Indicate the depth to groundwater below your facility.

Depth to groundwater ..... UK meters

10.05 For each on-site activity listed, indicate (Y/N/NA) all routine releases of the listed substance to the environment. (Refer to the instructions for a definition of Y, N, and NA.)

CBI

[ ]

On-Site Activity	Environmental Release Air	Water	Land
Manufacturing	NA	NA	NA
Importing	NA	NA	NA
Processing	Y	N	N
Otherwise used	NA	NA	NA
Product or residual storage	Y	N	N
Disposal	NA	NA	NA
Transport	NA	NA	NA

[ ] Mark (X) this box if you attach a continuation sheet.

10.06 Provide the following information for the listed substance and specify the level of precision for each item. (Refer to the instructions for further explanation and an example.)

CBI

[ ]

Quantity discharged to the air	4.1	kg/yr	± 10	%
Quantity discharged in wastewaters	NA	kg/yr	± ___	%
Quantity managed as other waste in on-site treatment, storage, or disposal units	NA	kg/yr	± ___	%
Quantity managed as other waste in off-site treatment, storage, or disposal units	NA	kg/yr	± ___	%

[ ] Mark (X) this box if you attach a continuation sheet.

10.08 Describe the control technologies used to minimize release of the listed substance for each process stream containing the listed substance as identified in your process block or residual treatment block flow diagram(s). Photocopy this question and complete it separately for each process type.

CBI

[__] Process type ..... Rebond Carpet Pad Manufacturing

Stream ID Code	Control Technology	Percent Efficiency
NA	NA	NA

[__] Mark (X) this box if you attach a continuation sheet.

PART B RELEASE TO AIR

10.09 Point Source Emissions -- Identify each emission point source containing the listed substance in terms of a Stream ID Code as identified in your process block or residual treatment block flow diagram(s), and provide a description of each point source. Do not include raw material and product storage vents, or fugitive emission sources (e.g., equipment leaks). Photocopy this question and complete it separately for each process type.

CBI

[__]

Process type ..... Rebond Carpet Pad Manufacturing

Point Source ID Code	Description of Emission Point Source
7A	TDI Bulk Tank Vent
7C	Mix Tank Vent
7D	Mix Tank Vent
7Q	Compression Mold Vent

[__] Mark (X) this box if you attach a continuation sheet.

10.10 Emission Characteristics - - Characterize the emissions for each Point Source ID Code identified in question 10.09 by completing the following table.

CBI

[ ]

Point Source ID Code	Physical State[1]	Average Emissions (kg/day)	Frequency[2] (days/yr)	Duration[3] (min/day)	Average Emission Factor[4]	Maximum Emission Rate (kg/min)	Maximum Emission Rate Frequency (events/yr)	Maximum Emission Rate Duration (min/event)
7A	V	negl.	260	840	UK	NA	NA	NA
7C	V	negl.	260	840	UK	NA	NA	NA
7D	V	negl.	260	840	UK	NA	NA	NA
7Q	V	.017	260	840	.00005	.00009	12,272	4

[1]Use the following codes to designate physical state at the point of release:
G = Gas; V = Vapor; P = Particulate; A = Aerosol; O = Other (specify) _____

[2]Frequency of emission at any level of emission

[3]Duration of emission at any level of emission

[4]Average Emission Factor — Provide estimated (± 25 percent) emission factor (kg of emission per kg of production of listed substance)

[ ] Mark (X) this box if you attach a continuation sheet.

10.11 Stack Parameters -- Identify the stack parameters for each Point Source ID Code identified in question 10.09 by completing the following table.

CBI

[ ]

Point Source ID Code	Stack Height(m)	Stack Inner Diameter (at outlet) (m)	Exhaust Temperature (°C)	Emission Exit Velocity (m/sec)	Building Height(m)[1]	Building Width(m)[2]	Vent Type[3]
7A	9.4	.05	20°	UK	6.1	30.5	V
7C	9.4	.05	20°	UK	6.1	30.5	V
7D	9.4	.05	20°	UK	6.1	30.5	V
7Q	10.7	0.61	177	1.9	6.1	30.5	V

[1]Height of attached or adjacent building

[2]Width of attached or adjacent building

[3]Use the following codes to designate vent type:

H = Horizontal
V = Vertical

[ ] Mark (X) this box if you attach a continuation sheet.

10.12 If the listed substance is emitted in particulate form, indicate the particle size distribution for each Point Source ID Code identified in question 10.09. Photocopy this question and complete it separately for each emission point source.

CBI

[__] Point source ID code ..... NA

Size Range (microns)	Mass Fraction (% ± % precision)
< 1	
≥ 1 to < 10	
≥ 10 to < 30	
≥ 30 to < 50	
≥ 50 to < 100	
≥ 100 to < 500	
≥ 500	
	Total = 100%

[__] Mark (X) this box if you attach a continuation sheet.

PART C FUGITIVE EMISSIONS

10.13 Equipment Leaks -- Complete the following table by providing the number of equipment types listed which are exposed to the listed substance and which are in service according to the specified weight percent of the listed substance passing through the component. Do this for each process type identified in your process block or residual treatment block flow diagram(s). Do not include equipment types that are not exposed to the listed substance. If this is a batch or intermittently operated process, give an overall percentage of time per year that the process type is exposed to the listed substance. Photocopy this question and complete it separately for each process type.

CBI

[ ] Process type ..... Rebond Carpet Pad Manufacturing

Percentage of time per year that the listed substance is exposed to this process type ..... 100 %

Equipment Type	Number of Components in Service by Weight Percent of Listed Substance in Process Stream					
	Less than 5%	5-10%	11-25%	26-75%	76-99%	Greater than 99%
Pump seals[1]						
Packed						6
Mechanical						
Double mechanical[2]						
Compressor seals[1]						
Flanges						
Valves						
Gas[3]						
Liquid						8
Pressure relief devices[4] (Gas or vapor only)						
Sample connections						
Gas						
Liquid						
Open-ended lines[5] (e.g., purge, vent)						
Gas						
Liquid						

[1] List the number of pump and compressor seals, rather than the number of pumps or compressors

10.13 continued on next page

[ ] Mark (X) this box if you attach a continuation sheet.

10.13 (continued)

[2]If double mechanical seals are operated with the barrier (B) fluid at a pressure greater than the pump stuffing box pressure and/or equipped with a sensor (S) that will detect failure of the seal system, the barrier fluid system, or both, indicate with a "B" and/or an "S", respectively

[3]Conditions existing in the valve during normal operation

[4]Report all pressure relief devices in service, including those equipped with control devices

[5]Lines closed during normal operation that would be used during maintenance operations

10.14 Pressure Relief Devices with Controls -- Complete the following table for those pressure relief devices identified in 10.13 to indicate which pressure relief devices in service are controlled. If a pressure relief device is not controlled, enter "None" under column c.

CBI

[ ]

a. Number of Pressure Relief Devices	b. Percent Chemical in Vessel[1]	c. Control Device	d. Estimated Control Efficiency[2]
NA			

[1]Refer to the table in question 10.13 and record the percent range given under the heading entitled "Number of Components in Service by Weight Percent of Listed Substance" (e.g., <5%, 5-10%, 11-25%, etc.)

[2]The EPA assigns a control efficiency of 100 percent for equipment leaks controlled with rupture discs under normal operating conditions. The EPA assigns a control efficiency of 98 percent for emissions routed to a flare under normal operating conditions

[ ] Mark (X) this box if you attach a continuation sheet.

10.15 Equipment Leak Detection -- If a formal leak detection and repair program is in place, complete the following table regarding those leak detection and repair procedures. Photocopy this question and complete it separately for each process type.

CBI

[__] Process type ..... NA

Equipment Type	Leak Detection Concentration (ppm or mg/m^3) Measured at ___ Inches from Source	Detection Device[1]	Frequency of Leak Detection (per year)	Repairs Initiated (days after detection)	Repairs Completed (days after initiated)
Pump seals					
Packed					
Mechanical					
Double mechanical					
Compressor seals					
Flanges					
Valves					
Gas					
Liquid					
Pressure relief devices (gas or vapor only)					
Sample connections					
Gas					
Liquid					
Open-ended lines					
Gas					
Liquid					

[1]Use the following codes to designate detection device:

POVA = Portable organic vapor analyzer
FPM = Fixed point monitoring
O = Other (specify) _____

[__] Mark (X) this box if you attach a continuation sheet.

10.16 Raw Material, Intermediate and Product Storage Emissions - - Complete the following table by providing the information on each liquid raw material, intermediate, and product storage vessel containing the listed substance as identified in your process block or residual treatment block flow diagram(s).

CBI

[ ]

Vessel Type[1]	Floating Roof Seals[2]	Composition of Stored Materials[3]	Throughput (liters per year)	Vessel Filling Rate (gpm)	Vessel Filling Duration (min)	Vessel Inner Diameter (m)	Vessel Height (m)	Operating Vessel Volume (l)	Vessel Emission Controls[4]	Design Flow Rate[5]	Vent Diameter (cm)	Control Efficiency (%)	Basis for Estimate[6]
F	NA	100%	66,916	30	330	3.1	4.9	37,850	None	NA	.05	NA	NA

[1]Use the following codes to designate vessel type:

F = Fixed roof
CIF = Contact internal floating roof
NCIF = Noncontact internal floating roof
EFR = External floating roof
P = Pressure vessel (indicate pressure rating)
H = Horizontal
U = Underground

[2]Use the following codes to designate floating roof seals:

MS1 = Mechanical shoe, primary
MS2 = Shoe-mounted secondary
MS2R = Rim-mounted, secondary
LM1 = Liquid-mounted resilient filled seal, primary
LM2 = Rim-mounted shield
LMW = Weather shield
VM1 = Vapor mounted resilient filled seal, primary
VM2 = Rim-mounted secondary
VMW = Weather shield

[3]Indicate weight percent of the listed substance. Include the total volatile organic content in parenthesis

[4]Other than floating roofs

[5]Gas/vapor flow rate the emission control device was designed to handle (specify flow rate units)

[6]Use the following codes to designate basis for estimate of control efficiency:

C = Calculations
S = Sampling

[ ] Mark (X) this box if you attach a continuation sheet.

PART E NON-ROUTINE RELEASES

10.23 Indicate the date and time when the release occurred and when the release ceased or was stopped. If there were more than six releases, attach a continuation sheet and list all releases. No releases during reporting period.

Release	Date Started	Time (am/pm)	Date Stopped	Time (am/pm)
1	None			
2				
3				
4				
5				
6				

10.24 Specify the weather conditions at the time of each release. NA

Release	Wind Speed (km/hr)	Wind Direction	Humidity (%)	Temperature (°C)	Precipitation (Y/N)
1	NA				
2					
3					
4					
5					
6					

[ ] Mark (X) this box if you attach a continuation sheet.

APPENDIX I: List of Continuation Sheets

Attach continuation sheets for sections of this form and optional information after this page. In column 1, clearly identify the continuation sheet by listing the question number to which it relates. In column 2, enter the inclusive page numbers of the continuation sheet for each question number.

Question Number (1)	Continuation Sheet Page Numbers (2)
7.01	42a
7.03	44a
8.01	50a
9.04	91a
4.02	Appendix II

[ ] Mark (X) this box if you attach a continuation sheet.

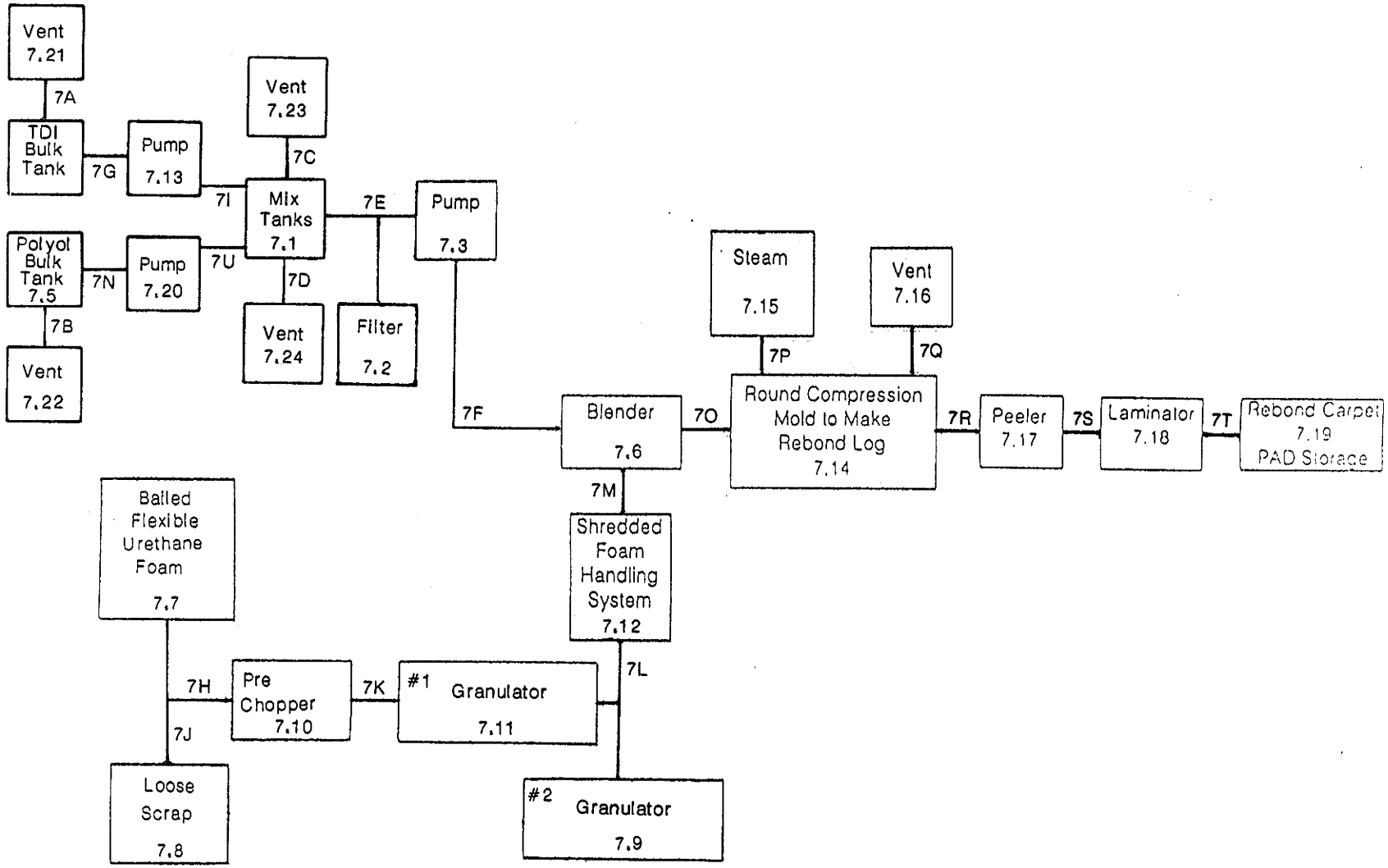

Figure 7.01 Flow Diagram Rebond Carpet Pad Process

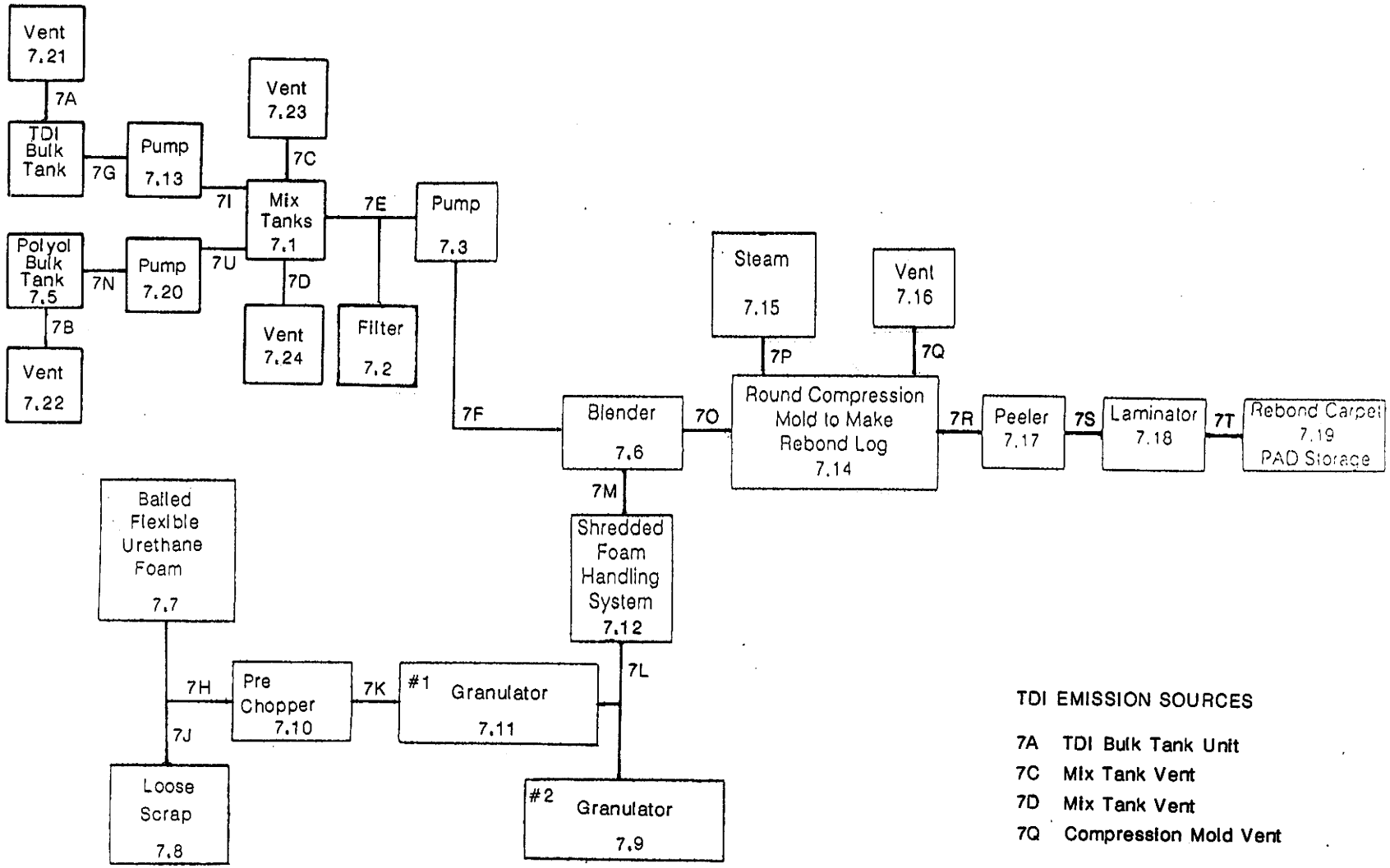

Figure 7.03 Emission Source Diagram Rebond Carpet Pad Process

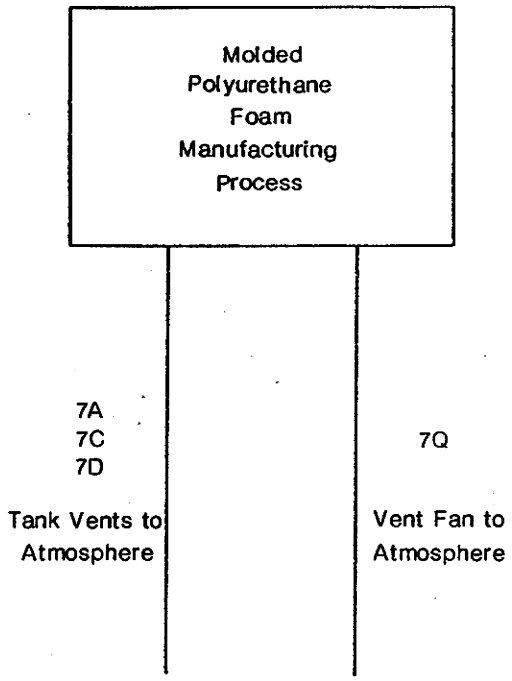

Figure 8.01 Mold Line Residual Flow Diagram

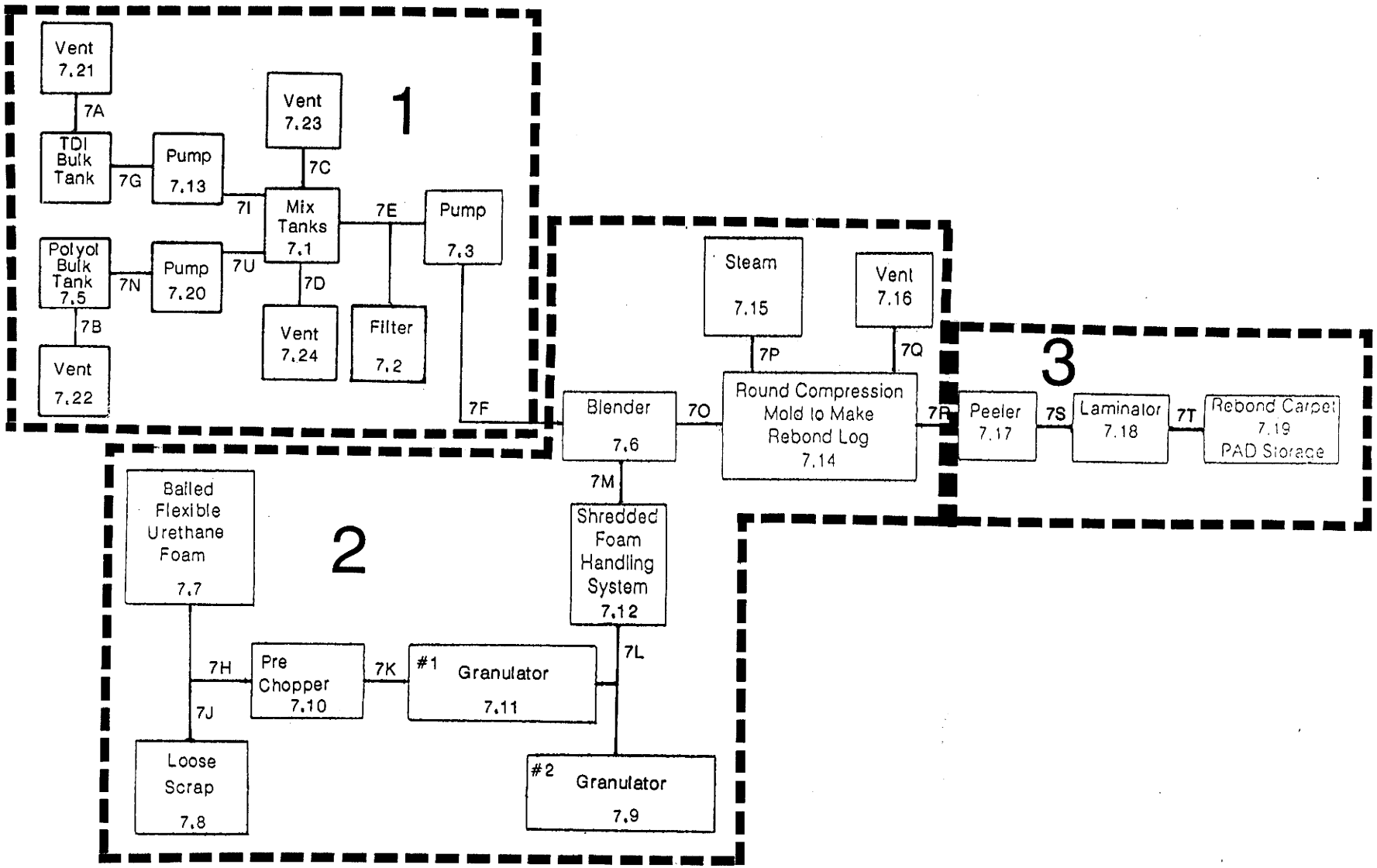

Figure 9.04 Rebond Carpet Pad Work Area Diagram

APPENDIX II

MATERIAL SAFETY DATA SHEET
FOR TDI USED

MATERIAL SAFETY DATA SHEET

Mobay Corporation
A Bayer USA INC. COMPANY

Bayer

DIVISION ADDRESS

MOBAY CORPORATION
Polyurethane Division
Mobay Road
Pittsburgh, PA 15205-9741

ISSUE DATE 3/20/89
SUPERSEDES 1/2/89

TRANSPORTATION EMERGENCY: CALL CHEMTREC
TELEPHONE NO: 800-424-9300; DISTRICT OF COLUMBIA: 202-483-7616

MOBAY NON-TRANSPORTATION EMERGENCY NO.:
(412) 923-1800

I. PRODUCT IDENTIFICATION

PRODUCT NAME.....: Mondur TD-80 (All Grades)
PRODUCT CODE NUMBER.....: E-002
CHEMICAL FAMILY.....: Aromatic Isocyanate
CHEMICAL NAME.....: Toluene Diisocyanate (TDI)
SYNONYMS.....: Benzene, 1,3-diisocyanato methyl-
CAS NUMBER.....: 26471-62-5
T.S.C.A. STATUS.....: This product is listed on the TSCA Inventory.
OSHA HAZARD COMMUNICATION STATUS.....: This product is hazardous under the criteria of the Federal OSHA Hazard Communication Standard 29 CFR 1910.1200.
CHEMICAL FORMULA.....: $C_9H_6N_2O_2$

II. HAZARDOUS INGREDIENTS

COMPONENTS:	%:	OSHA-PEL	ACGIH-TLV
2,4-Toluene Diisocyanate* (TDI) CAS# 584-84-9	80	0.02 ppm STEL 0.005 ppm 8HR TWA	0.005 ppm TWA 0.02 ppm STEL
2,6-Toluene Diisocyanate* (TDI) CAS# 91-08-7	20	Not Established	Not Established

*For Section 302 and 313 SARA information refer to Page 6, Section IX, SARA.

III. PHYSICAL DATA

APPEARANCE.....: Liquid
COLOR.....: Water white to pale yellow
ODOR.....: Sharp, pungent
ODOR THRESHOLD.....: Greater than TLV of 0.005 ppm
MOLECULAR WEIGHT.....: 174
MELT POINT/FREEZE POINT...: Approx. 55°F (13°C) for TDI
BOILING POINT.....: Approx. 484°F (251°C) for TDI
VAPOR PRESSURE.....: Approx. 0.025 mmHg @ 77°F (25°C) for TDI
VAPOR DENSITY (AIR=1).....: 6.0 for TDI
pH.....: Not Applicable
SPECIFIC GRAVITY.....: 1.22 @ 77°F (25°C)
BULK DENSITY.....: 10.18 lbs/gal
SOLUBILITY IN WATER.....: Not Soluble. Reacts slowly with water at normal room temperature to liberate CO_2 gas.
% VOLATILE BY VOLUME.....: Negligible

MB 321 REV 10-86

IV. FIRE & EXPLOSION DATA

FLASH POINT $^{o}F(^{o}C)$.....: $260^{o}F$ ($127^{o}C$) Pensky-Martens Closed Cup
FLAMMABLE LIMITS -
Lel.....: 0.9%
Uel.....: 9.5%
EXTINGUISHING MEDIA.....: Dry chemical (e.g. monoammonium phosphate, potassium sulfate, and potassium chloride), carbon dioxide, high expansion (proteinic) chemical foam, water spray for large fires. Caution: Reaction between water or foam and hot TDI can be vigorous.
SPECIAL FIRE FIGHTING PROCEDURES/UNUSUAL FIRE OR EXPLOSION HAZARDS:
Full emergency equipment with self-contained breathing apparatus and full protective clothing (such as rubber gloves, boots, bands around legs, arms and waist) should be worn by fire fighters. No skin surface should be exposed. During a fire, TDI vapors and other irritating, highly toxic gases may generated by thermal decomposition or combustion. (See Section VIII). At temperatures greater than $350^{o}F$ ($177^{o}C$) TDI forms carbodiimides with the release of CO_2 which can cause pressure build-up in closed containers. Explosive rupture is possible. Therefore, use cold water to cool fire-exposed containers.

V. HUMAN HEALTH DATA

PRIMARY ROUTE(S) OF ENTRY.....: Inhalation. Skin contact from liquid, vapors or aerosols.
EFFECTS AND SYMPTOMS OF OVEREXPOSURE
INHALATION

Acute Exposure. TDI vapors or mist at concentrations above the TLV can irritate (burning sensation) the mucous membranes in the respiratory tract (nose, throat, lungs) causing runny nose, sore throat, coughing, chest discomfort, shortness of breath and reduced lung function (breathing obstruction). Persons with a preexisting, nonspecific bronchial hyperreactivity can respond to concentrations below the TLV with similar symptoms as well as asthma attack. Exposure well above the TLV may lead to bronchitis, bronchial spasm and pulmonary edema (fluid in lungs). These effects are usually reversible. Chemical or hypersensitive pneumonitis, with flu-like symptoms (e.g., fever, chills), has also been reported. These symptoms can be delayed up to several hours after exposure.

Chronic Exposure. As a result of previous repeated overexposures or a single large dose, certain individuals may develop isocyanate sensitization (chemical asthma) which will cause them to react to a later exposure to isocyanate at levels well below the TLV. These symptoms, which can include chest tightness, wheezing, cough, shortness of breath or asthmatic attack, could be immediate or delayed up to several hours after exposure. Similar to many non-specific asthmatic responses, there are reports that once sensitized an individual can experience these symptoms upon exposure to dust, cold air or other irritants. This increased lung sensitivity can persist for weeks and in severe cases for several years. Chronic overexposure to isocyanate has also been reported to cause lung damage (including decrease in lung function) which may be permanent. Sensitization can either be temporary or permanent.

V. HUMAN HEALTH DATA (Continued)

SKIN CONTACT

Acute Exposure. Isocyanates react with skin protein and moisture and can cause irritation which may include the following symptoms: reddening, swelling, rash, scaling or blistering. Cured material is difficult to remove.

Chronic Exposure. Prolonged contact can cause reddening, swelling, rash, scaling, blistering, and, in some cases, skin sensitization. Individuals who have developed a skin sensitization can develop these symptoms as a result of contact with very small amounts of liquid material or as a result of exposure to vapor.

EYE CONTACT

Acute Exposure. Liquid, aerosols or vapors are severely irritating and can cause pain, tearing, reddening and swelling. If left untreated, corneal damage can occur and injury is slow to heal. However, damage is usually reversible. See Section VI for treatment.

Chronic Exposure. Prolonged vapor contact may cause conjunctivitis.

INGESTION

Acute Exposure. Can result in irritation and corrosive action in the mouth, stomach tissue and digestive tract. Symptoms can include sore throat, abdominal pain, nausea, vomiting and diarrhea.

Chronic Exposure. None Found

MEDICAL CONDITIONS

AGGRAVATED BY EXPOSURE...: Asthma, other respiratory disorders (bronchitis, emphysema, bronchial hyperreactivity), skin allergies, eczema.

CARCINOGENICITY.....: No carcinogenic activity was observed in lifetime inhalation studies in rats and mice (International Isocyanate Institute).

NTP.....: The National Toxicology Program reported that TDI caused an increase in the number of tumors in exposed rats over those counted in non-exposed rats. The TDI was administered in corn-oil and introduced into the stomach through a tube. Based on this study, the NTP has listed TDI as a substance that may reasonably be anticipated to be a carcinogen in its Fourth Annual Report on Carcinogens.

IARC.....: IARC has announced that it will list TDI as a substance for which there is sufficient evidence for its carcinogenicity in experimental animals but inadequate evidence for the carcinogenicity of TDI to humans (IARC Monograph 39).

OSHA.....: Not listed.

EXPOSURE LIMITS

OSHA PEL.....: 0.02 ppm STEL/0.005 ppm 8HR TWA for 2,4'-TDI

ACGIH TLV.....: 0.005 ppm TWA/0.02 ppm STEL

VI. EMERGENCY & FIRST AID PROCEDURES

EYE CONTACT.....: Flush with copious amounts of water, preferably lukewarm for at least 15 minutes holding eyelids open all the time. Refer individual to physician or an ophthalmologist for immediate follow-up.

VI. EMERGENCY & FIRST AID PROCEDURE (Continued)

SKIN CONTACT.....: Remove contaminated clothing immediately. Wash affected areas thoroughly with soap and water for at least 15 minutes. Tincture of green soap and water is also effective in removing isocyanates. Wash contaminated clothing thoroughly before reuse. For severe exposures, get under safety shower after removing clothing, then get medical attention. For lesser exposures, seek medical attention if irritation develops or persists after the area is washed.
INHALATION.....: Move to an area free from risk of further exposure. Administer oxygen or artificial respiration as needed. Obtain medical attention. Asthmatic-type symptoms may develop and may be immediate or delayed up to several hours. Consult physician.
INGESTION.....: Do not induce vomiting. Give 1 to 2 cups of milk or water to drink. DO NOT GIVE ANYTHING BY MOUTH TO AN UNCONSCIOUS PERSON. Consult physician.
NOTE TO PHYSICIAN.....: Eyes. Stain for evidence of corneal injury. If cornea is burned, instill antibiotic steroid preparation frequently. Workplace vapors have produced reversible corneal epithelial edema impairing vision. Skin: This compound is a known skin sensitizer. Treat symptomatically as for contact dermatitis or thermal burns. Ingestion. Treat symptomatically. There is no specific antidote. Inducing vomiting is contraindicated because of the irritating nature of this compound. Respiratory. This compound is a known pulmonary sensitizer. Treatment is essentially symptomatic. An individual having a skin or pulmonary sensitization reaction to this material should be removed from exposure to any isocyanate.

VII. EMPLOYEE PROTECTION RECOMMENDATIONS

EYE PROTECTION.....: Liquid chemical goggles or full-face shield. Contact lenses should not be worn. If vapor exposure is causing irritation, use a full-face, air-supplied respirator.
SKIN PROTECTION.....: Chemical resistant gloves (butyl rubber, nitrile rubber, polyvinyl alcohol). However, please note that PVA degrades in water. Cover as much of the exposed skin area as possible with appropriate clothing. If skin creams are used, keep the area covered only by the cream to a minimum.
RESPIRATORY PROTECTION....: An approved positive pressure air-supplied respirator is required whenever TDI concentrations are not known or exceed the Short-Term Exposure or Ceiling Limit of 0.02 ppm or exceed the 8-hour Time Weighted Average TLV of 0.005 ppm. An approved air-supplied respirator with full facepiece must also be worn during spray application, even if exhaust ventilation is used. For emergency and other conditions where the exposure limits may be greatly exceeded, use an approved, positive pressure self-contained breathing apparatus. TDI has poor warning properties since the odor at which TDI can be smelled is substantially higher than 0.02 ppm. Observe OSHA regulations for respirator use (29 CFR 1910.134).

VII. EMPLOYEE PROTECTION RECOMMENDATIONS (Continued)

VENTILATION.....: Local exhaust should be used to maintain levels below the TLV whenever TDI is handled, processed, or spray-applied. At normal room temperatures (70°F) TDI levels quickly exceed the TLV unless properly ventilated. Standard reference sources regarding industrial ventilation (e.g., ACGIH Industrial Ventilation) should be consulted for guidance about adequate ventilation.

MONITORING.....: TDI exposure levels must be monitored by accepted monitoring techniques to ensure that the TLV is not exceeded. (Contact Mobay for guidance). See Volume 1 (Chapter 17) and Volume 3 (Chapter 3) in Patty's Industrial Hygiene and Toxicology for sampling strategy.

MEDICAL SURVEILLANCE.....: Medical supervision of all employees who handle or come in contact with TDI is recommended. These should include preemployment and periodic medical examinations with respiratory function tests (FEV, FVC as a minimum). Persons with asthmatic-type conditions, chronic bronchitis, other chronic respiratory diseases or recurrent skin eczema or sensitization should be excluded from working with TDI. Once a person is diagnosed as sensitized to TDI, no further exposure can be permitted.

OTHER.....: Safety showers and eyewash stations should be available. Educate and train employees in safe use of product. Follow all label instructions.

VIII. REACTIVITY DATA

STABILITY.....: Stable under normal conditions.

POLYMERIZATION.....: May occur if in contact with moisture or other materials which react with isocyanates. Self-reaction may occur at temperatures over 350°F (177°C) or at lower temperatures if sufficient time is involved. See Section IV.

INCOMPATIBILITY
(MATERIALS TO AVOID)....: Water, amines, strong bases, alcohols. Will cause some corrosion to copper alloys and aluminum. Reacts with water to form heat, CO_2 and insoluble ureas.

HAZARDOUS DECOMPOSITION
PRODUCTS.....: By high heat and fire: carbon monoxide, oxides of nitrogen, traces of HCN, TDI vapors and mist.

IX. SPILL OR LEAK PROCEDURES

STEPS TO BE TAKEN IN CASE MATERIAL IS RELEASED OR SPILLED: Evacuate and ventilate spill area; dike spill to prevent entry into water system; wear full protective equipment, including respiratory equipment during clean-up. (See Section VII).

Major Spill: Call Mobay at 412/923-1800. If transportation spill, call CHEMTREC 800/424-9300. If temporary control of isocyanate vapor is required, a blanket of protein foam (available at most fire departments) may be placed over the spill. Large quantities may be pumped into closed, but not sealed, container for disposal.

IX. SPILL OR LEAK PROCEDURES (Continued)

Minor Spill: Absorb isocyanate with sawdust or other absorbent, shovel into suitable unsealed containers, transport to well-ventilated area (outside) and treat with neutralizing solution: mixture of water (80%) with non-ionic surfactant Tergitol TMN-10 (20%), or; water (90%), concentrated ammonia (3-8%) and detergent (2%). Add about 10 parts or neutralizer per part of isocyanate, with mixing. Allow to stand uncovered for 48 hours to let CO_2 escape.

Clean-up: Decontaminate floor with decontamination solution letting stand for at least 15 minutes.

CERCLA (SUPERFUND) REPORTABLE QUANTITY: 100 pounds for TDI

WASTE DISPOSAL METHOD.....: Follow all federal, state or local regulations. TDI must be disposed of in a permitted incinerator or landfill. Incineration is the preferred method for liquids. Solids are usually incinerated or landfilled. Empty containers must be handled with care due to product residue. Decontaminate containers prior to disposal. Empty decontaminated containers should be crushed to prevent reuse. DO NOT HEAT OR CUT EMPTY CONTAINER WITH ELECTRIC OR GAS TORCH. (See Sections IV and VIII). Vapors and gases may be highly toxic.

RCRA STATUS.....: TDI is listed as a hazardous waste (No. U-223) under Title 40 Code of Federal Regulations, Section 261.33 (f). The residue from decontaminating a TDI spill is also classified as a hazardous waste under Section 261.3 (c)(2) or RCRA.

SUPERFUND AMENDMENTS AND REAUTHORIZATION ACT (SARA), TITLE III:

Section 302 - Extremely Hazardous Substances: 2,4-Toluene Diisocyanate (TDI) CAS# 584-84-9 = 80%
2,6-Toluene Diisocyanate (TDI) CAS# 91-08-7 = 20%

Section 313 - Toxic Chemicals: 2,4-Toluene Diisocyanate (TDI) CAS# 584-84-9 = 80%
2,6-Toluene Diisocyanate (TDI) CAS# 91-08-7 = 20%

X. SPECIAL PRECAUTIONS & STORAGE DATA

STORAGE TEMPERATURE (MIN./MAX.).....: $70^{o}F$ ($21^{o}C$)/$90^{o}F$ ($32^{o}C$)

AVERAGE SHELF LIFE.....: 12 months

SPECIAL SENSITIVITY (HEAT, LIGHT, MOISTURE).: If container is exposed to high heat, $375^{o}F$ ($177^{o}C$) it can be pressurized and possibly rupture. TDI reacts slowly with water to form polyureas and liberates CO_2 gas. This gas can cause sealed containers to expand and possibly rupture.

PRECAUTIONS TO BE TAKEN IN HANDLING AND STORING.: Store in tightly closed containers to prevent moisture contamination. Do not reseal if contamination is suspected. Prevent all contact. Do not breathe the vapors. Warning properties (irritation of the eyes, nose and throat or odor) are not adequate to prevent chronic overexposure from inhalation. This material can produce asthmatic sensitization upon either single inhalation exposure to a relatively high concentration or upon repeated inhalation exposures to lower concentrations. Exposure to vapors of heated TDI can be extremely dangerous. Employee education and training in safe handling of this product are required under the OSHA Hazard Communication Standard.

XI. SHIPPING DATA

D.O.T. SHIPPING NAME.....: Toluene Diisocyanate
TECHNICAL SHIPPING NAME...: Toluene Diisocyanate (TDI)
D.O.T. HAZARD CLASS.....: Poison B
UN/NA NO.....: UN 2078
PRODUCT RQ.....: 100 pounds
D.O.T. LABELS.....: Poison
D.O.T. PLACARDS.....: Poison
FRT. CLASS BULK.....: Toluene Diisocyanate
FRT. CLASS PKG.....: Chemicals, NOI (Toluene Diisocyanate) NMFC 60000
PRODUCT LABEL.....: Mondur TD-80 Product Label

XII. ANIMAL TOXICITY DATA

ACUTE TOXICITY

ORAL, LD50.....: Range of 4130-6170 mg/kg (Rats and Mice)
DERMAL, LD50.....: Greater than 10,000 mg/kg (Rabbits)
INHALATION, LC50.(4 hr).: Range of 16-50 ppm (Rat), 10 ppm (Mouse), 11 ppm (Rabbit), 13 ppm (Guinea Pig).
EYE EFFECTS.....: Severe eye irritant capable of inducing corneal opacity.
SKIN EFFECTS.....: Moderate skin irritant. Primary dermal irritation score: 4.12/8.0 (Draize). However, repeated or prolonged contact may culminate in severe skin irritation and/or corrosion.
SENSITIZATION.....: Skin sensitizer in guinea pigs. One study using guinea pigs reported that repeated skin contact with TDI caused respiratory sensitization. Although poorly defined in experimental animal models, TDI is known to be a pulmonary sensitizer in humans. In addition, there is some evidence that cross-sensitization between different types of diisocyanates may occur.

SUB-CHRONIC/CHRONIC TOXICITY: Sub-chronic and chronic animal studies show that the primary effects of inhaling vapors and/or aerosols of TDI are restricted to the pulmonary systems. Emphysema, pulmonary edema, pneumonitis and rhinitis are common pathologic effects. Extended exposures to as low as 0.1 ppm TDI have induces pulmonary inflammation.

OTHER

CARCINOGENICITY.....: The NTP conducted carcinogenesis studies of a commercial grade TDI using rats and mice in which the test material was diluted in corn oil and administered by gavage. The investigators concluded that TDI was carcinogenic in male and female rats (fibrosarcomas, pancreatic adenomas, neoplastic liver nodules and mammary gland fibrosarcomas) and female mice (hemangiosarcomas and hepatocellular adenomas). However, chronic inhalation studies in which rats and mice were exposed to 0.05 and 0.15 ppm TDI (10-30 times recommended TLV, 8-hr level) induced no treatment-related tumorigenic effects. In these studies, both exposure levels produced extensive irritation to the nasal passages and upper respiratory system of the test animals indicating that suitable effective exposures were administered.

XII. ANIMAL TOXICITY DATA (Continued)

MUTAGENICITY.....: TDI is positive in the Ames assay with activation. However, mammalian cell transformation assays using human lung cells and Syrian hamster kidney cells were negative, as were micronucleus tests using rats and mice.

TERATOGENICITY.....: Rats were exposed to an 80:20 mixture of 2,4- and 2,6- toluene diisocyanate vapor at analytical concentrations of 0.021, 0.12 and 0.48 ppm. Minimal fetotoxicity was observed at a maternally toxic concentrations of 0.48 ppm. The NOEL for maternal and developmental toxicity was 0.12 ppm. No embryotoxicity or teratogenicity was observed.

AQUATIC TOXICITY.....: LC_{50} - 96 hr (static): 165 mg/liter (Fathead minnow)
LC_{50} - 96 hr (static): Greater than 508 mg/liter (Grass shrimp)
LC_{50} - 24 hr (static): Greater than 500 mg/liter (Daphnia magna)

XIII. APPROVALS

REASON FOR ISSUE.....: Revising TLV in Sections II and V
PREPARED BY.....: G. L. Copeland
APPROVED BY.....: J. H. Chapman
TITLE.....: Manager, Product Safety - Polyurethane & Coatings

This information is furnished without warranty, expressed or implied, except that it is accurate to the best knowledge of Mobay Corporation. The data on this sheet relates only to the specific material designated herein. Mobay Corporation assumes no legal responsibility for use or reliance upon these data.