CONTAINS NO CBI

EPA

Form Approved
OMB No. 2010-0019
Approval Expires 12-31-89

89 JUL 11 PM 1:46

OTS DOCUMENT CONTROL OFFICE

EPA-OTS

000622645P

90-890000455

UNITED STATES ENVIRONMENTAL PROTECTION AGENCY

Comprehensive Assessment Information Rule

REPORTING FORM

When completed, send this form to:	For Agency Use Only:
Document Processing Center Office of Toxic Substances, TS-790 U.S. Environmental Protection Agency 401 M Street, SW Washington, DC 20460 Attention: CAIR Reporting Office	Date of Receipt: _____ Document Control Number: _____ Docket Number: _____

EPA Form 7710-52

SECTION 1 GENERAL MANUFACTURER, IMPORTER, AND PROCESSOR INFORMATION

PART A GENERAL REPORTING INFORMATION

1.01 This Comprehensive Assessment Information Rule (CAIR) Reporting Form has been completed in response to the Federal Register Notice of..... [1][2] [2][2] [8][8]
mo. day year

CBI

[ ] a. If a Chemical Abstracts Service Number (CAS No.) is provided in the Federal Register, list the CAS No. ..... [0][2][6][4][7][1]-[6][2]-[5]

b. If a chemical substance CAS No. is not provided in the Federal Register, list either (i) the chemical name, (ii) the mixture name, or (iii) the trade name of the chemical substance as provided in the Federal Register.

(i) Chemical name as listed in the rule ..... N/A

(ii) Name of mixture as listed in the rule .... N/A

(iii) Trade name as listed in the rule ..... N/A

c. If a chemical category is provided in the Federal Register, report the name of the category as listed in the rule, the chemical substance CAS No. you are reporting on which falls under the listed category, and the chemical name of the substance you are reporting on which falls under the listed category.

Name of category as listed in the rule ..... N/A

CAS No. of chemical substance ..... [0][0][0][5][8][4]-[8][4]-[9]

Name of chemical substance ..... N/A

1.02 Identify your reporting status under CAIR by circling the appropriate response(s).

CBI

Manufacturer 1

[ ] Importer 2

Processor 3

X/P manufacturer reporting for customer who is a processor 4

X/P processor reporting for customer who is a processor 5

[ ] Mark (X) this box if you attach a continuation sheet.

1.03 Does the substance you are reporting on have an "x/p" designation associated with it in the above-listed Federal Register Notice?

CBI

[ ]

Yes ..... [X] Go to question 1.04

No ..... [ ] Go to question 1.05

1.04 a. Do you manufacture, import, or process the listed substance and distribute it under a trade name(s) different than that listed in the Federal Register Notice? Circle the appropriate response.

CBI

[ ]

Yes 1

No ..... (2)

b. Check the appropriate box below:

[ ] You have chosen to notify your customers of their reporting obligations

Provide the trade name(s) .... N/A

[ ] You have chosen to report for your customers

[ ] You have submitted the trade name(s) to EPA one day after the effective date of the rule in the Federal Register Notice under which you are reporting.

1.05 If you buy a trade name product and are reporting because you were notified of your reporting requirements by your trade name supplier, provide that trade name.

CBI

[ ]

Trade name ..... ELASTAN 6059U

Is the trade name product a mixture? Circle the appropriate response.

Yes 1

No ..... (2)

1.06 Certification -- The person who is responsible for the completion of this form must sign the certification statement below:

CBI

[ ]

"I hereby certify that, to the best of my knowledge and belief, all information entered on this form is complete and accurate."

JOHN VANDERMARK		7/5/89
NAME	SIGNATURE	DATE SIGNED
PROJECT ENGINEER	(714) 735-6020	
TITLE	TELEPHONE NO.	

[ ] Mark (X) this box if you attach a continuation sheet.

1.07 Exemptions From Reporting -- If you have provided EPA or another Federal agency with the required information on a CAIR Reporting Form for the listed substance within the past 3 years, and this information is current, accurate, and complete for the time period specified in the rule, then sign the certification below. You are required to complete section 1 of this CAIR form and provide any information now required but not previously submitted. Provide a copy of any previous submissions along with your Section 1 submission.

CBI [__]

"I hereby certify that, to the best of my knowledge and belief, all required information which I have not included in this CAIR Reporting Form has been submitted to EPA within the past 3 years and is current, accurate, and complete for the time period specified in the rule."

N/A		
NAME	SIGNATURE	DATE SIGNED
TITLE	(_____) _____ - _____ TELEPHONE NO.	DATE OF PREVIOUS SUBMISSION

1.08 CBI Certification -- If you have asserted any CBI claims in this report you must certify that the following statements truthfully and accurately apply to all of those confidentiality claims which you have asserted.

CBI [__]

"My company has taken measures to protect the confidentiality of the information, and it will continue to take these measures; the information is not, and has not been, reasonably ascertainable by other persons (other than government bodies) by using legitimate means (other than discovery based on a showing of special need in a judicial or quasi-judicial proceeding) without my company's consent; the information is not publicly available elsewhere; and disclosure of the information would cause substantial harm to my company's competitive position."

N/A		
NAME	SIGNATURE	DATE SIGNED
TITLE	(_____) _____ - _____ TELEPHONE NO.	

[__] Mark (X) this box if you attach a continuation sheet.

PART B CORPORATE DATA

1.09 Facility Identification

CBI Name [P][A][C][I][F][I][C][ ][C][L][A][Y][ ][P][R][O][D][U][C][T][S][,][I][N][C][.]

[ ] Address [2][0][3][2][5][ ][I][F][M][F][S][C][A][I][ ][C][A][Y][O][N][ ][R][D][.][ ]
Street

[C][O][R][O][N][A][ ][ ][ ][ ][ ][ ][ ][ ][ ][ ][ ][ ][ ][ ][ ][ ][ ]
City

[C][A] [9][1][7][1][9]--[ ][ ][ ][ ]
State Zip

Dun & Bradstreet Number .....[0][0]-[8][3][8]-[1][8][2][4]

EPA ID Number .....CA...[0][0][0][0][6][7][5][5][7] 9

Employer ID Number .....95..[ ][2][5][8][8][1][5][9]

Primary Standard Industrial Classification (SIC) Code .....[3][2][5][9]

Other SIC Code .....[ ][ ][ ][ ]

Other SIC Code .....[ ][ ][ ][ ]

1.10 Company Headquarters Identification

CBI Name [P][A][C][I][F][I][C][ ][H][O][L][D][I][N][G][ ][C][O][M][P][A][N][Y][ ][ ][ ]

[ ] Address [1][0][9][0][0][ ][W][I][L][S][H][I][R][E][ ][B][L][V][D][.][ ][ ][ ][ ][ ]
Street

[L][O][S][ ][A][N][G][E][L][E][S][ ]
City

[C][A] [9][0][0][2][4]--[ ][ ][ ][ ]
State Zip

Dun & Bradstreet Number .....[0][0]-[8][3][8]-[1][8][2][4]

Employer ID Number .....[1][3][2][6][3][5][9][0] 8

[ ] Mark (X) this box if you attach a continuation sheet.

1.11 Parent Company Identification

CBI Name [ ]

[ ] Address [ ]
Street

[ ]
City

[ ] [ ]
State Zip

N/A

Dun & Bradstreet Number .....[ ]-[ ]-[ ]

1.12 Technical Contact

CBI Name [JOHN VANDERMARK]

[ ] Title [PROJECT ENGINEER]

Address [20325 TEMESCAL ANYON RD]
Street

[CORONA]
City

[CA] [91719]--[ ]
State Zip

Telephone Number .....[ ]-[ ]-[ ]

1.13 This reporting year is from ..... [01] [88] to [12] [88]
Mo. Year Mo. Year

[ ] Mark (X) this box if you attach a continuation sheet.

1.14 Facility Acquired -- If you purchased this facility during the reporting year, provide the following information about the seller:

CBI Name of Seller [__]

[__] Mailing Address [__]
Street

[__]
City

N/A [__][__] [__][__][__][__][__]--[__][__][__][__]
State Zip

Employer ID Number .....[__][__][__][__][__][__][__][__]

Date of Sale .....[__][__] [__][__] [__][__]
Mo. Day Year

Contact Person [__]

Telephone Number .....[__][__][__]-[__][__][__]-[__][__][__][__]

1.15 Facility Sold -- If you sold this facility during the reporting year, provide the following information about the buyer:

CBI Name of Buyer [__]

[__] Mailing Address [__]
Street

[__]
City

N/A [__][__] [__][__][__][__][__]--[__][__][__][__]
State Zip

Employer ID Number .....[__][__][__][__][__][__][__][__]

Date of Purchase .....[__][__] [__][__] [__][__]
Mo. Day Year

Contact Person [__]

Telephone Number .....[__][__][__]-[__][__][__]-[__][__][__][__]

[__] Mark (X) this box if you attach a continuation sheet.

1.16 For each classification listed below, state the quantity of the listed substance that was manufactured, imported, or processed at your facility during the reporting year.

CBI [ ] Classification	Quantity (kg/yr)
Manufactured	N/A
Imported	N/A
Processed (include quantity repackaged)	39,255
Of that quantity manufactured or imported, report that quantity:	
In storage at the beginning of the reporting year	N/A
For on-site use or processing	39,255
For direct commercial distribution (including export)	N/A
In storage at the end of the reporting year	0.0
Of that quantity processed, report that quantity:	
In storage at the beginning of the reporting year	0.0
Processed as a reactant (chemical producer)	N/A
Processed as a formulation component (mixture producer)	N/A
Processed as an article component (article producer)	N/A
Repackaged (including export)	N/A
In storage at the end of the reporting year	0.0

[ ] Mark (X) this box if you attach a continuation sheet.

PART C IDENTIFICATION OF MIXTURES

1.17 Mixture -- If the listed substance on which you are required to report is a mixture or a component of a mixture, provide the following information for each component chemical. (If the mixture composition is variable, report an average percentage of each component chemical for all formulations.)

CBI

[ ]

Component Name	Supplier Name	Average % Composition by Weight (specify precision, e.g., 45% ± 0.5%)
N/A		
		Total 100 %

[ ] Mark (X) this box if you attach a continuation sheet.

2.04 State the quantity of the listed substance that your facility manufactured, imported, or processed during the 3 corporate fiscal years preceding the reporting year in descending order.

CBI

[ ] Year ending ..... [1][2] [8][7]
Mo. Year

Quantity manufactured ..... N/A kg

Quantity imported ..... N/A kg

Quantity processed ..... 35,990 kg

Year ending ..... [1][2] [8][6]
Mo. Year

Quantity manufactured ..... N/A kg

Quantity imported ..... N/A kg

Quantity processed ..... 31,468 kg

Year ending ..... [1][2] [8][5]
Mo. Year

Quantity manufactured ..... N/A kg

Quantity imported ..... N/A kg

Quantity processed ..... 43,970 kg

2.05 Specify the manner in which you manufactured the listed substance. Circle all appropriate process types.

CBI

[ ]

Continuous process 1

Semicontinuous process 2

Batch process 3

N/A

[ ] Mark (X) this box if you attach a continuation sheet.

2.06 Specify the manner in which you processed the listed substance. Circle all appropriate process types.
CBI

[__]

Continuous process 1

Semicontinuous process 2

Batch process 3

2.07 State your facility's name-plate capacity for manufacturing or processing the listed substance. (If you are a batch manufacturer or batch processor, do not answer this question.)
CBI

[__]

Manufacturing capacity ..... _____ kg/yr

Processing capacity ..... UK kg/yr

2.08 If you intend to increase or decrease the quantity of the listed substance manufactured, imported, or processed at any time after your current corporate fiscal year, estimate the increase or decrease based upon the reporting year's production volume.
CBI

[__]

	Manufacturing Quantity (kg)	Importing Quantity (kg)	Processing Quantity (kg)
Amount of increase			UK
Amount of decrease			UK

[__] Mark (X) this box if you attach a continuation sheet.

2.09 For the three largest volume manufacturing or processing process types involving the listed substance, specify the number of days you manufactured or processed the listed substance during the reporting year. Also specify the average number of hours per day each process type was operated. (If only one or two operations are involved, list those.)

CBI

[__]

	Days/Year	Average Hours/Day
Process Type #1 (The process type involving the largest quantity of the listed substance.)		
Manufactured	N/A	
Processed	N/A	
Process Type #2 (The process type involving the 2nd largest quantity of the listed substance.)		
Manufactured	N/A	
Processed	N/A	
Process Type #3 (The process type involving the 3rd largest quantity of the listed substance.)		
Manufactured	N/A	
Processed	N/A	

2.10 State the maximum daily inventory and average monthly inventory of the listed substance that was stored on-site during the reporting year in the form of a bulk chemical.

CBI

[__]

Maximum daily inventory ..... N/A kg

Average monthly inventory ..... N/A kg

[__] Mark (X) this box if you attach a continuation sheet.

2.11 Related Product Types -- List any byproducts, coproducts, or impurities present with the listed substance in concentrations greater than 0.1 percent as it is manufactured, imported, or processed. The source of byproducts, coproducts, or impurities means the source from which the byproducts, coproducts, or impurities are made or introduced into the product (e.g., carryover from raw material, reaction product, etc.).

CBI

[__]

CAS No.	Chemical Name	Byproduct, Coproduct or Impurity[1]	Concentration (%) (specify ± % precision)	Source of Byproducts, Coproducts, or Impurities
	UK			

[1]Use the following codes to designate byproduct, coproduct, or impurity:

B = Byproduct
C = Coproduct
I = Impurity

UK

[__] Mark (X) this box if you attach a continuation sheet.

2.12 Existing Product Types -- List all existing product types which you manufactured, imported, or processed using the listed substance during the reporting year. List the quantity of listed substance you use for each product type as a percentage of the total volume of listed substance used during the reporting year. Also list the quantity of listed substance used captively on-site as a percentage of the value listed under column b., and the types of end-users for each product type. (Refer to the instructions for further explanation and an example.)

CBI

[ ]

a. Product Types[1]	b. % of Quantity Manufactured, Imported, or Processed	c. % of Quantity Used Captively On-Site	d. Type of End-Users[2]
B	100%	100%	H

[1]Use the following codes to designate product types:

A = Solvent
B = Synthetic reactant
C = Catalyst/Initiator/Accelerator/Sensitizer
D = Inhibitor/Stabilizer/Scavenger/Antioxidant
E = Analytical reagent
F = Chelator/Coagulant/Sequestrant
G = Cleanser/Detergent/Degreaser
H = Lubricant/Friction modifier/Antiwear agent
I = Surfactant/Emulsifier
J = Flame retardant
K = Coating/Binder/Adhesive and additives
L = Moldable/Castable/Rubber and additives
M = Plasticizer
N = Dye/Pigment/Colorant/Ink and additives
O = Photographic/Reprographic chemical and additives
P = Electrodeposition/Plating chemicals
Q = Fuel and fuel additives
R = Explosive chemicals and additives
S = Fragrance/Flavor chemicals
T = Pollution control chemicals
U = Functional fluids and additives
V = Metal alloy and additives
W = Rheological modifier
X = Other (specify) _____

[2]Use the following codes to designate the type of end-users:

I = Industrial
CM = Commercial
CS = Consumer
H = Other (specify) Municipal Industrial Sewer Service

[ ] Mark (X) this box if you attach a continuation sheet.

2.13 Expected Product Types -- Identify all product types which you expect to manufacture, import, or process using the listed substance at any time after your current corporate fiscal year. For each use, specify the quantity you expect to manufacture, import, or process for each use as a percentage of the total volume of listed substance used during the reporting year. Also list the quantity of listed substance used captively on-site as a percentage of the value listed under column b., and the types of end-users for each product type. (Refer to the instructions for further explanation and an example.)

CBI [ ]

a. Product Types[1]	b. % of Quantity Manufactured, Imported, or Processed	c. % of Quantity Used Captively On-Site	d. Type of End-Users[2]
N/A			

[1]Use the following codes to designate product types:

A = Solvent
B = Synthetic reactant
C = Catalyst/Initiator/Accelerator/Sensitizer
D = Inhibitor/Stabilizer/Scavenger/Antioxidant
E = Analytical reagent
F = Chelator/Coagulant/Sequestrant
G = Cleanser/Detergent/Degreaser
H = Lubricant/Friction modifier/Antiwear agent
I = Surfactant/Emulsifier
J = Flame retardant
K = Coating/Binder/Adhesive and additives
L = Moldable/Castable/Rubber and additives
M = Plasticizer
N = Dye/Pigment/Colorant/Ink and additives
O = Photographic/Reprographic chemical and additives
P = Electrodeposition/Plating chemicals
Q = Fuel and fuel additives
R = Explosive chemicals and additives
S = Fragrance/Flavor chemicals
T = Pollution control chemicals
U = Functional fluids and additives
V = Metal alloy and additives
W = Rheological modifier
X = Other (specify) _____

[2]Use the following codes to designate the type of end-users:

I = Industrial
CM = Commercial
CS = Consumer
H = Other (specify) N/A

[ ] Mark (X) this box if you attach a continuation sheet.

2.14 CBI [ ] Final Product -- Complete the following table for each type of final product manufactured, imported, or processed at your facility that contains the listed substance other than as an impurity.

a. Product Type[1]	b. Final Product's Physical Form[2]	c. Average % Composition of Listed Substance in Final Product	d. Type of End-Users[3]
N/A			

[1]Use the following codes to designate product types:

A = Solvent
B = Synthetic reactant
C = Catalyst/Initiator/Accelerator/Sensitizer
D = Inhibitor/Stabilizer/Scavenger/Antioxidant
E = Analytical reagent
F = Chelator/Coagulant/Sequestrant
G = Cleanser/Detergent/Degreaser
H = Lubricant/Friction modifier/Antiwear agent
I = Surfactant/Emulsifier
J = Flame retardant
K = Coating/Binder/Adhesive and additives
L = Moldable/Castable/Rubber and additives
M = Plasticizer
N = Dye/Pigment/Colorant/Ink and additives
O = Photographic/Reprographic chemical and additives
P = Electrodeposition/Plating chemicals
Q = Fuel and fuel additives
R = Explosive chemicals and additives
S = Fragrance/Flavor chemicals
T = Pollution control chemicals
U = Functional fluids and additives
V = Metal alloy and additives
W = Rheological modifier
X = Other (specify) _____

[2]Use the following codes to designate the final product's physical form:

A = Gas
B = Liquid
C = Aqueous solution
D = Paste
E = Slurry
F1 = Powder
F2 = Crystalline solid
F3 = Granules
F4 = Other solid
G = Gel
H = Other (specify) N/A

[3]Use the following codes to designate the type of end-users:

I = Industrial
CM = Commercial
CS = Consumer
H = Other (specify) N/A

[ ] Mark (X) this box if you attach a continuation sheet.

2.15 Circle all applicable modes of transportation used to deliver bulk shipments of the listed substance to off-site customers.
CBI

[__] Truck ..... (1)

Railcar 2

Barge, Vessel 3

Pipeline 4

Plane 5

Other (specify) _____ 6

2.16 Customer Use -- Estimate the quantity of the listed substance used by your customers or prepared by your customers during the reporting year for use under each category of end use listed (i-iv).
CBI

[__]

Category of End Use

i. Industrial Products

Chemical or mixture ..... _____ kg/yr

Article ..... N/A kg/yr

ii. Commercial Products

Chemical or mixture ..... _____ kg/yr

Article ..... _____ kg/yr

iii. Consumer Products

Chemical or mixture ..... _____ kg/yr

Article ..... _____ kg/yr

iv. Other

Distribution (excluding export) ..... _____ kg/yr

Export ..... _____ kg/yr

Quantity of substance consumed as reactant ..... _____ kg/yr

Unknown customer uses ..... _____ kg/yr

[__] Mark (X) this box if you attach a continuation sheet.

SECTION 3 PROCESSOR RAW MATERIAL IDENTIFICATION

PART A GENERAL DATA

3.01 Specify the quantity purchased and the average price paid for the listed substance for each major source of supply listed. Product trades are treated as purchases.
CBI The average price is the market value of the product that was traded for the listed substance.
[ ]

Source of Supply	Quantity (kg)	Average Price ($/kg)
The listed substance was manufactured on-site.	N/A	
The listed substance was transferred from a different company site.	N/A	
The listed substance was purchased directly from a manufacturer or importer.	39,255	2.80
The listed substance was purchased from a distributor or repackager.	N/A	
The listed substance was purchased from a mixture producer.	N/A	

3.02 Circle all applicable modes of transportation used to deliver the listed substance to your facility.
CBI
[ ]

Truck ..... (1)

Railcar 2

Barge, Vessel 3

Pipeline 4

Plane 5

Other (specify) _____ 6

[ ] Mark (X) this box if you attach a continuation sheet.

3.03 a. Circle all applicable containers used to transport the listed substance to your facility.
CBI

[ ]

Bags 1

Boxes 2

Free standing tank cylinders 3

Tank rail cars 4

Hopper cars 5

Tank trucks 6

Hopper trucks 7

Drums 8

Pipeline 9

Other (specify) _____ 10

b. If the listed substance is transported in pressurized tank cylinders, tank rail cars, or tank trucks, state the pressure of the tanks.

Tank cylinders ..... N/A mmHg

Tank rail cars ..... N/A mmHg

Tank trucks ..... N/A mmHg

[ ] Mark (X) this box if you attach a continuation sheet.

PART B RAW MATERIAL IN THE FORM OF A MIXTURE

3.04 If you obtain the listed substance in the form of a mixture, list the trade name(s) of the mixture, the name of its supplier(s) or manufacturer(s), an estimate of the average percent composition by weight of the listed substance in the mixture, and the amount of mixture processed during the reporting year.

CBI

[__]

Trade Name	Supplier or Manufacturer	Average % Composition by Weight (specify ± % precision)	Amount Processed (kg/yr)
N/A			
N/A			
N/A			
N/A			

[__] Mark (X) this box if you attach a continuation sheet.

PART C RAW MATERIAL VOLUME

3.05 CBI [ ] State the quantity of the listed substance used as a raw material during the reporting year in the form of a class I chemical, class II chemical, or polymer, and the percent composition, by weight, of the listed substance.

	Quantity Used (kg/yr)	% Composition by Weight of Listed Substance in Raw Material (specify ± % precision)
Class I chemical	39,255	100%
Class II chemical		
Polymer		

[ ] Mark (X) this box if you attach a continuation sheet.

SECTION 4 PHYSICAL/CHEMICAL PROPERTIES

General Instructions:

If you are reporting on a mixture as defined in the glossary, reply to questions in Section 4 that are inappropriate to mixtures by stating "NA -- mixture."

For questions 4.06-4.15, if you possess any hazard warning statement, label, MSDS, or other notice that addresses the information requested, you may submit a copy or reasonable facsimile in lieu of answering those questions which it addresses.

PART A PHYSICAL/CHEMICAL DATA SUMMARY

4.01 Specify the percent purity for the three major[1] technical grade(s) of the listed substance as it is manufactured, imported, or processed. Measure the purity of the substance in the final product form for manufacturing activities, at the time you import the substance, or at the point you begin to process the substance.

CBI

[ ]

	Manufacture	Import	Process
Technical grade #1	N/A % purity	N/A % purity	50% % purity
Technical grade #2	N/A % purity	N/A % purity	N/A % purity
Technical grade #3	N/A % purity	N/A % purity	N/A % purity

[1]Major = Greatest quantity of listed substance manufactured, imported or processed.

4.02 Submit your most recently updated Material Safety Data Sheet (MSDS) for the listed substance, and for every formulation containing the listed substance. If you possess an MSDS that you developed and an MSDS developed by a different source, submit your version. Indicate whether at least one MSDS has been submitted by circling the appropriate response.

Yes ..... (1)

No 2

Indicate whether the MSDS was developed by your company or by a different source.

Your company 1

Another source ..... (2)

[ ] Mark (X) this box if you attach a continuation sheet.

4.03 Submit a copy or reasonable facsimile of any hazard information (other than an MSDS) that is provided to your customers/users regarding the listed substance or any formulation containing the listed substance. Indicate whether this information has been submitted by circling the appropriate response.

Yes 1

No 2

4.04 For each activity that uses the listed substance, circle all the applicable number(s) corresponding to each physical state of the listed substance during the activity listed. Physical states for importing and processing activities are determined at the time you import or begin to process the listed substance. Physical states for manufacturing, storage, disposal and transport activities are determined using the final state of the product.

CBI

[ ]

	Physical State				
Activity	Solid	Slurry	Liquid	Liquified Gas	Gas
Manufacture	1	2	3	4	5
Import	1	2	3	4	5
Process	1	2	3	4	5
Store	1	2	3	4	5
Dispose	1	2	3	4	5
Transport	1	2	3	4	5

[ ] Mark (X) this box if you attach a continuation sheet.

4.05 Particle Size -- If the listed substance exists in particulate form during any of the following activities, indicate for each applicable physical state the size and the percentage distribution of the listed substance by activity. Do not include particles ≥10 microns in diameter. Measure the physical state and particle sizes for importing and processing activities at the time you import or begin to process the listed substance. Measure the physical state and particle sizes for manufacturing storage, disposal and transport activities using the final state of the product.

CBI

[ ]

Physical State		Manufacture	Import	Process	Store	Dispose	Transport
Dust	<1 micron			N/A			
	1 to <5 microns						
	5 to <10 microns						
Powder	<1 micron			N/A			
	1 to <5 microns						
	5 to <10 microns						
Fiber	<1 micron			N/A			
	1 to <5 microns						
	5 to <10 microns						
Aerosol	<1 micron			N/A			
	1 to <5 microns						
	5 to <10 microns						

[ ] Mark (X) this box if you attach a continuation sheet.

SECTION 5 ENVIRONMENTAL FATE

PART A RATE CONSTANTS AND TRANSFORMATION PRODUCTS

5.01 Indicate the rate constants for the following transformation processes.

a. Photolysis:

Absorption spectrum coefficient (peak) .... N.A. (1/M cm) at N.A. nm

Reaction quantum yield, ϕ ..... N.A. at N.A. nm

Direct photolysis rate constant, k_p, at ... N.A. 1/hr N.A. latitude

b. Oxidation constants at 25°C:

For $^1O_2$ (singlet oxygen), k_{ox} ..... N.A. 1/M hr

For RO_2 (peroxy radical), k_{ox} ..... N.A. 1/M hr

c. Five-day biochemical oxygen demand, BOD_5 ... N.A. mg/l

d. Biotransformation rate constant:

For bacterial transformation in water, k_b... N.A. 1/hr

Specify culture ..... N.A.

e. Hydrolysis rate constants:

For base-promoted process, k_B ..... N.A. 1/M hr

For acid-promoted process, k_A ..... N.A. 1/M hr

For neutral process, k_N 18 1/hr

f. Chemical reduction rate (specify conditions) N.A.

g. Other (such as spontaneous degradation) ... N.A.

[ ] Mark (X) this box if you attach a continuation sheet.

PART B PARTITION COEFFICIENTS

5.02 a. Specify the half-life of the listed substance in the following media.

Media	Half-life (specify units)
Groundwater	[1 yr.
Atmosphere	3.3 hr.
Surface water	0.5 sec. to 3 days (ph and temperature depended)
Soil	[24 hrs.

b. Identify the listed substance's known transformation products that have a half-life greater than 24 hours.

CAS No.	Name	Half-life (specify units)		Media
(a) N.A.	3,3'-diisocyanato-4,4'-dimethylcarbanilide	N.A.	in	H_2O
			in	
(b) N.A.	2,2'-dimethyl-3,3'-di-isocyanatocarbanilide	N.A.	in	H_2O
			in	
(c) N.A.	higher TDI-urea oligomers	N.A.		H_2O

5.03 Specify the octanol-water partition coefficient, K_{ow} ... 0.21 at 25°C

Method of calculation or determination ..... from log P value

5.04 Specify the soil-water partition coefficient, K_d ..... N.A. * at 25°C

Soil type ..... N.A.

5.05 Specify the organic carbon-water partition coefficient, K_{oc} ..... N.A. * at 25°C

5.06 Specify the Henry's Law Constant, H ..... N.A. * atm-m^3/mole

* Decomposes rapidly in water

[ ] Mark (X) this box if you attach a continuation sheet.

5.07 List the bioconcentration factor (BCF) of the listed substance, the species for which it was determined, and the type of test used in deriving the BCF.

Bioconcentration Factor	Species	Test[1]
N.A. *		

* TDI decomposes rapidly with water

[1]Use the following codes to designate the type of test:

F = Flowthrough
S = Static

[ ] Mark (X) this box if you attach a continuation sheet.

6.04 For each market listed below, state the quantity sold and the total sales value of the listed substance sold or transferred in bulk during the reporting year.

CBI

[ ]

Market	Quantity Sold or Transferred (kg/yr)	Total Sales Value ($/yr)
Retail sales	N/A	N/A
Distribution -- Wholesalers	N/A	N/A
Distribution -- Retailers	N/A	N/A
Intra-company transfer	664,392	657,983
Repackagers	N/A	N/A
Mixture producers	N/A	N/A
Article producers	N/A	N/A
Other chemical manufacturers or processors	N/A	N/A
Exporters	N/A	N/A
Other (specify)		
	N/A	N/A

6.05 Substitutes -- List all known commercially feasible substitutes that you know exist for the listed substance and state the cost of each substitute. A commercially feasible substitute is one which is economically and technologically feasible to use in your current operation, and which results in a final product with comparable performance in its end uses.

CBI

[ ]

Substitute	Cost ($/kg)
UK	

[ ] Mark (X) this box if you attach a continuation sheet.

SECTION 7 MANUFACTURING AND PROCESSING INFORMATION

General Instructions:

For questions 7.04-7.06, provide a separate response for each process block flow diagram provided in questions 7.01, 7.02, and 7.03. Identify the process type from which the information is extracted.

PART A MANUFACTURING AND PROCESSING PROCESS TYPE DESCRIPTION

7.01 In accordance with the instructions, provide a process block flow diagram showing the major (greatest volume) process type involving the listed substance.

CBI

[ ] Process type ..... Polyurethane Elastomer pouring line

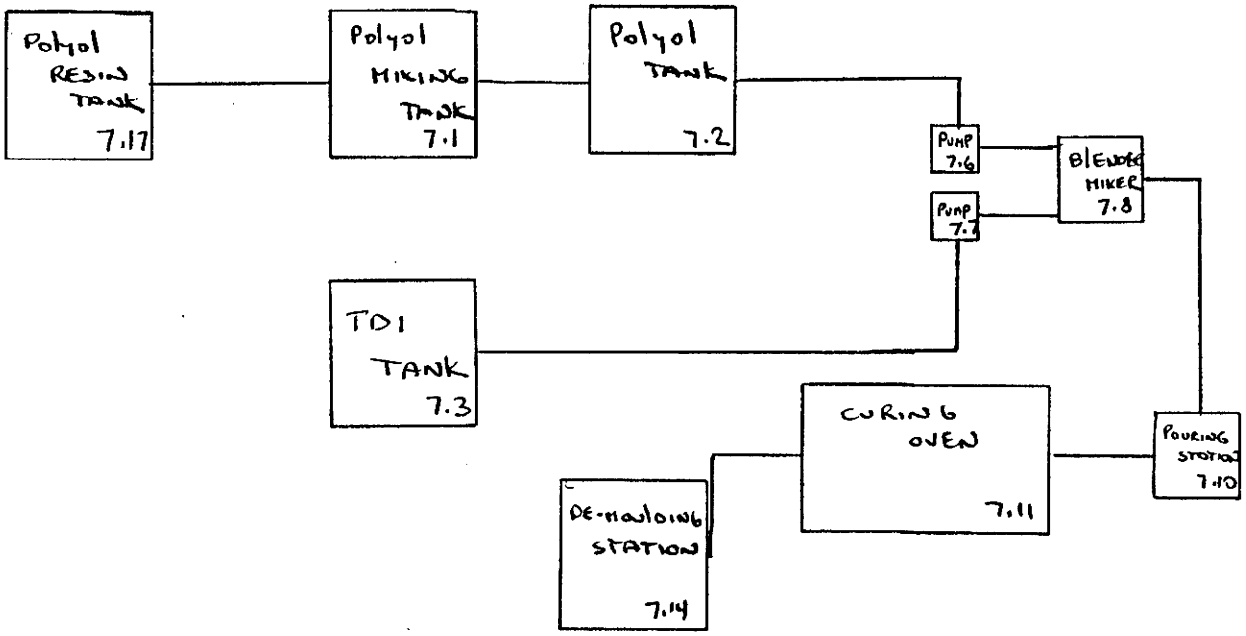

[ ] Mark (X) this box if you attach a continuation sheet.

7.02 In accordance with the instructions, provide a separate process block flow diagram showing each of the three major (greatest volume) process types involving the listed substance.

CBI

[ ] Process type ..... Polyurethane Elastomer pouring line

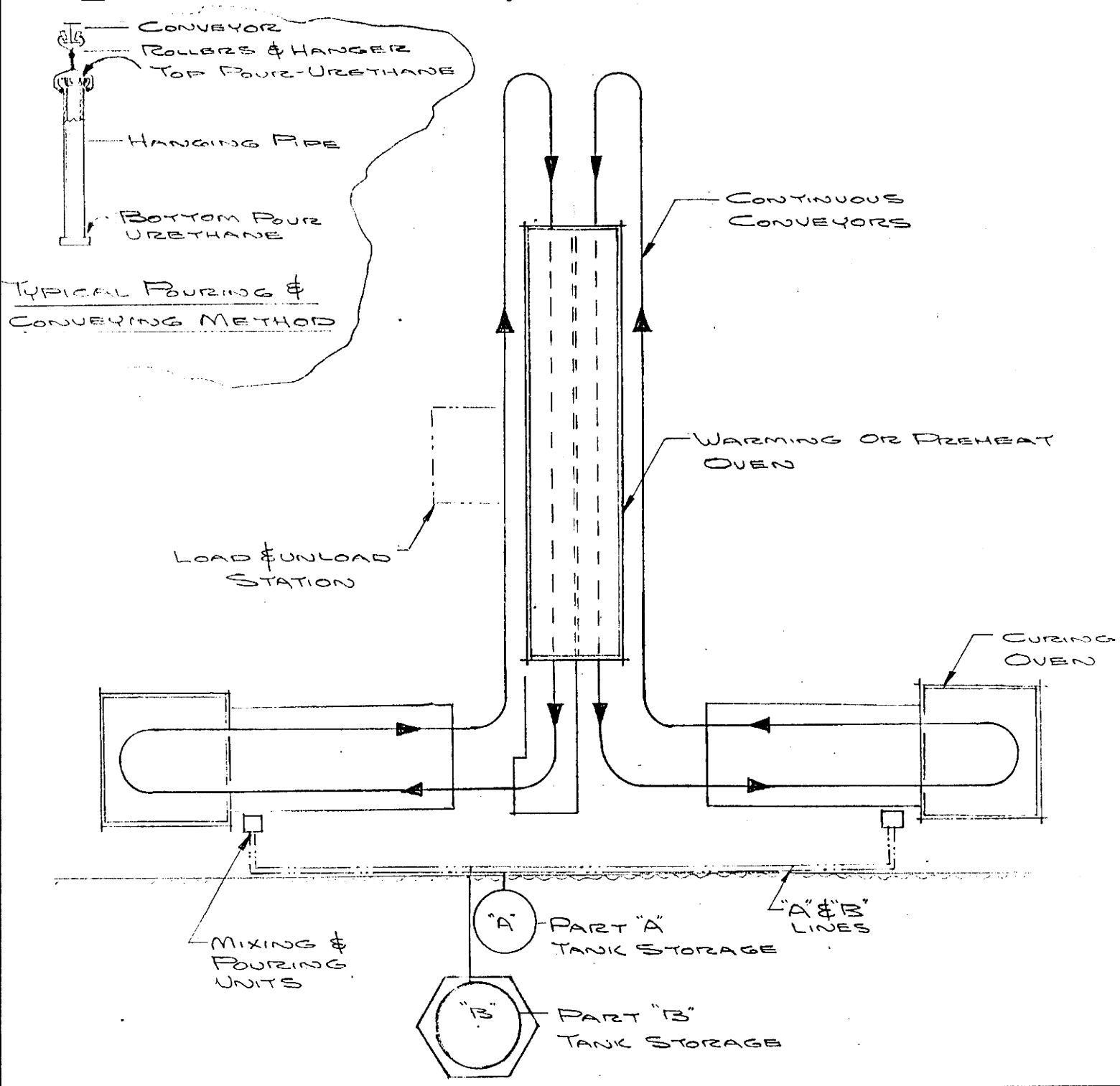

[ ] Mark (X) this box if you attach a continuation sheet.

7.03 In accordance with the instructions, provide a process block flow diagram showing all process emission streams and emission points that contain the listed substance and which, if combined, would total at least 90 percent of all facility emissions if not treated before emission into the environment. If all such emissions are released from one process type, provide a process block flow diagram using the instructions for question 7.01. If all such emissions are released from more than one process type, provide a process block flow diagram showing each process type as a separate block.

CBI

[ ] Process type ..... Polyuethane Elastomer pouring line

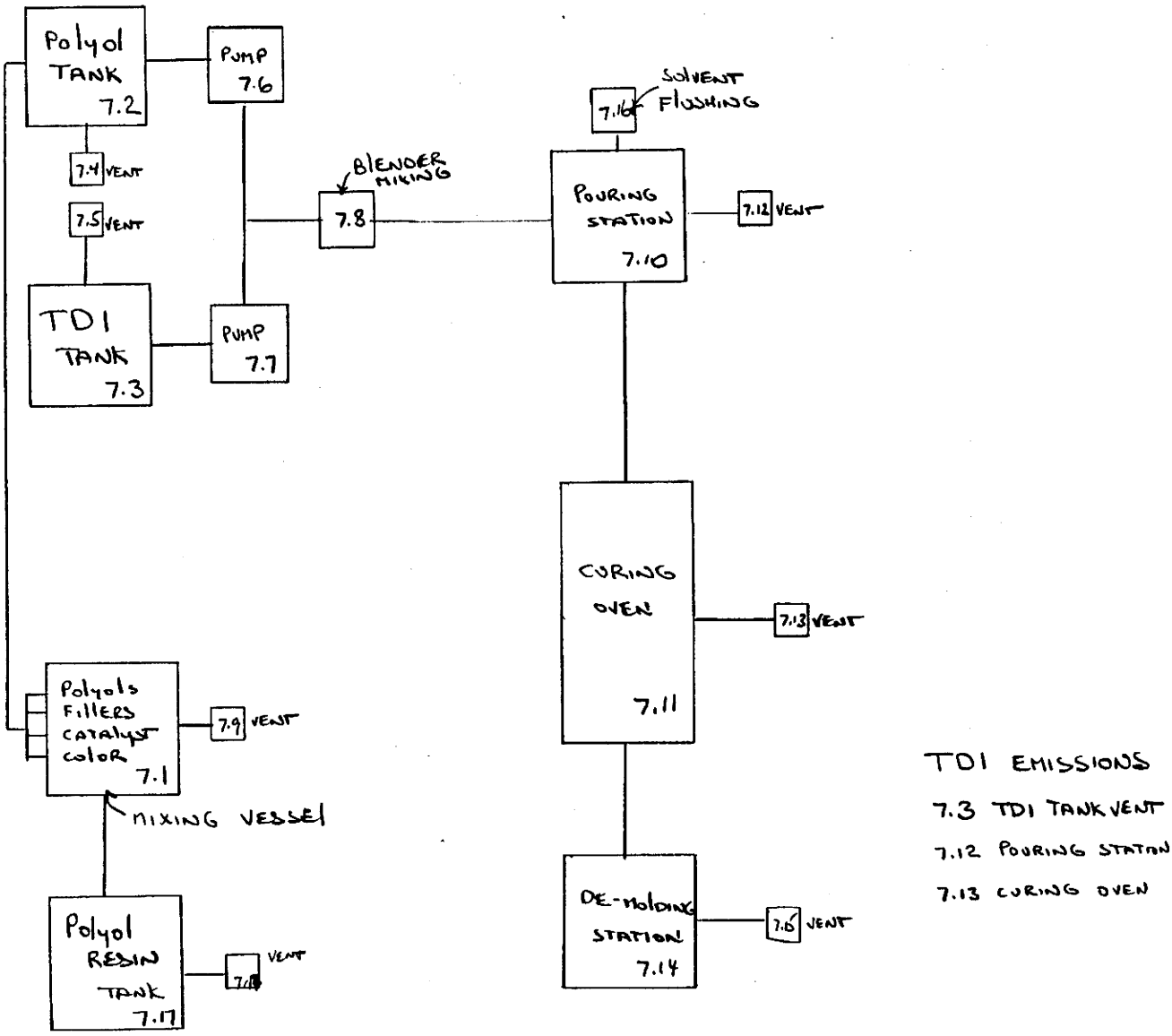

[ ] Mark (X) this box if you attach a continuation sheet.

7.04 Describe the typical equipment types for each unit operation identified in your process block flow diagram(s). If a process block flow diagram is provided for more than one process type, photocopy this question and complete it separately for each process type.

CBI

[ ] Process type ..... Polyurethane Elastomer Production LIne

Unit Operation ID Number	Typical Equipment Type	Operating Temperature Range (°C)	Operating Pressure Range (mm Hg)	Vessel Composition
7.1	mixing vessel	93.9	29.4	steel
7.2	storage tank	17.8	atmospheric	steel
7.3	storage tank	17.8	atmospheric	steel
7.4	vent	ambient	atmospheric	steel
7.5	vent	ambient	atmospheric	N/A
7.6	metering pump	17.8	atmospheric	steel
7.7	metering pump	17.8	atmospheric	steel
7.8	mixing blender	17.8	atmospheric	steel
7.9	vent	ambient	atmospheric	N/A
7.10	pouring station	ambient	atmospheric	steel
7.11	curing oven	65.5	atmospheric	steel
7.12	vent	ambient	atmospheric	N/A
7.13	vent	ambient	atmospheric	N/A
7.14	mold station	ambient	atmospheric	steel
7.15	vent	ambient	atmospheric	N/A
7.16	solvent flushing	ambient	atmospheric	steel
7.17	storage tank	ambient	atmospheric	steel
7.18	vent	ambient	atmospheric	N/A

[ ] Mark (X) this box if you attach a continuation sheet.

7.05 Describe each process stream identified in your process block flow diagram(s). If a process block flow diagram is provided for more than one process type, photocopy this question and complete it separately for each process type.

CBI

[ ] Process type ..... Polyurethane Elastomer Production Line

Process Stream ID Code	Process Stream Description	Physical State[1]	Stream Flow (kg/yr)
7.5	TDI prepol tank vent	GU	196
7.8	mixer blender	AL	39,255
7.10	pouring station	GU	UK
7.11	curing oven	GU	UK
7.16	solvent flushing	SY	357

[1]Use the following codes to designate the physical state for each process stream:

GC = Gas (condensible at ambient temperature and pressure)
GU = Gas (uncondensible at ambient temperature and pressure)
SO = Solid
SY = Sludge or slurry
AL = Aqueous liquid
OL = Organic liquid
IL = Immiscible liquid (specify phases, e.g., 90% water, 10% toluene)

[ ] Mark (X) this box if you attach a continuation sheet.

7.06 Characterize each process stream identified in your process block flow diagram(s). If a process block flow diagram is provided for more than one process type, photocopy this question and complete it separately for each process type. (Refer to the instructions for further explanation and an example.)

CBI

[ ] Process type ..... Process below is based on 100% system

a. Process Stream ID Code	b. Known Compounds[1]	c. Concentrations[2,3] (% or ppm)	d. Other Expected Compounds	e. Estimated Concentrations (% or ppm)
7.1	Polyether triol mix	88.5	N/A	N/A
7.3	TDI prepol	11.5	N/A	N/A

7.06 continued below

[ ] Mark (X) this box if you attach a continuation sheet.

7.06 (continued)

[1]For each additive package introduced into a process stream, specify the compounds that are present in each additive package, and the concentration of each component. Assign an additive package number to each additive package and list this number in column b. (Refer to the instructions for further explanation and an example. Refer to the glossary for the definition of additive package.)

Additive Package Number	Components of Additive Package	Concentrations (% or ppm)
1	N/A	N/A
2	N/A	N/A
3	N/A	N/A
4	N/A	N/A
5	N/A	N/A

[2]Use the following codes to designate how the concentration was determined:

A = Analytical result
E = Engineering judgement/calculation

[3]Use the following codes to designate how the concentration was measured:

V = Volume
W = Weight

[ ] Mark (X) this box if you attach a continuation sheet.

PART A RESIDUAL TREATMENT PROCESS DESCRIPTION

8.01 In accordance with the instructions, provide a residual treatment block flow diagram which describes the treatment process used for residuals identified in question 7.01.

CBI

[__] Process type ..... N/A

[__] Mark (X) this box if you attach a continuation sheet.

PART B RESIDUAL GENERATION AND CHARACTERIZATION

8.05 Characterize each process stream identified in your residual treatment block flow diagram(s). If a residual treatment block flow diagram is provided for more than one process type, photocopy this question and complete it separately for each process type. (Refer to the instructions for further explanation and an example.)

CBI

[ ] Process type ..... N/A

a. Stream ID Code	b. Type of Hazardous Waste[1]	c. Physical State of Residual[2]	d. Known Compounds[3]	e. Concentrations (% or ppm)[4,5,6]	f. Other Expected Compounds	g. Estimated Concentrations (% or ppm)
N/A						
N/A						
N/A						
N/A						

8.05 continued below

[ ] Mark (X) this box if you attach a continuation sheet.

8.05 (continued)

[1]Use the following codes to designate the type of hazardous waste:

I = Ignitable
C = Corrosive
R = Reactive
E = EP toxic
T = Toxic
H = Acutely hazardous

[2]Use the following codes to designate the physical state of the residual:

GC = Gas (condensible at ambient temperature and pressure)
GU = Gas (uncondensible at ambient temperature and pressure)
SO = Solid
SY = Sludge or slurry
AL = Aqueous liquid
OL = Organic liquid
IL = Immiscible liquid (specify phases, e.g., 90% water, 10% toluene)

8.05 continued below

N/A

[ ] Mark (X) this box if you attach a continuation sheet.

8.05 (continued)

[3]For each additive package introduced into a process stream, specify the compounds that are present in each additive package, and the concentration of each component. Assign an additive package number to each additive package and list this number in column d. (Refer to the instructions for further explanation and an example. Refer to the glossary for the definition of additive package.)

Additive Package Number	Components of Additive Package	Concentrations (% or ppm)
1	N/A	N/A
2	N/A	N/A
3	N/A	N/A
4	N/A	N/A
5	N/A	N/A

[4]Use the following codes to designate how the concentration was determined:

A = Analytical result
E = Engineering judgement/calculation

8.05 continued below

[ ] Mark (X) this box if you attach a continuation sheet.

8.05 (continued)

[5]Use the following codes to designate how the concentration was measured:

V = Volume
W = Weight

[6]Specify the analytical test methods used and their detection limits in the table below. Assign a code to each test method used and list those codes in column e.

Code	Method	Detection Limit (± ug/l)
1	N/A	
2	N/A	
3	N/A	
4	N/A	
5	N/A	
6	N/A	

[ ] Mark (X) this box if you attach a continuation sheet.

8.06 Characterize each process stream identified in your residual treatment block flow diagram(s). If a residual treatment block flow diagram is provided for more than one process type, photocopy this question and complete it separately for each process type. (Refer to the instructions for further explanation and an example.)

CBI

[ ] Process type ..... N/A

a. Stream ID Code	b. Waste Description Code[1]	c. Management Method Code[2]	d. Residual Quantities (kg/yr)	e. Management of Residual (%) On-Site	e. Management of Residual (%) Off-Site	f. Costs for Off-Site Management (per kg)	g. Changes in Management Methods
N/A							
N/A							
N/A							
N/A							

[1]Use the codes provided in Exhibit 8-1 to designate the waste descriptions

[2]Use the codes provided in Exhibit 8-2 to designate the management methods

[ ] Mark (X) this box if you attach a continuation sheet.

8.22 Describe the combustion chamber design parameters for each of the three largest (by capacity) incinerators that are used on-site to burn the residuals identified in your process block or residual treatment block flow diagram(s).

CBI

[__]

Incinerator	Combustion Chamber Temperature (°C)		Location of Temperature Monitor		Residence Time In Combustion Chamber (seconds)	
	Primary	Secondary	Primary	Secondary	Primary	Secondary
1	N/A	N/A	N/A	N/A	N/A	N/A
2	N/A	N/A	N/A	N/A	N/A	N/A
3	N/A	N/A	N/A	N/A	N/A	N/A

Indicate if Office of Solid Waste survey has been submitted in lieu of response by circling the appropriate response.

Yes 1

No 2

8.23 Complete the following table for the three largest (by capacity) incinerators that are used on-site to burn the residuals identified in your process block or residual treatment block flow diagram(s).

CBI

[__]

Incinerator	Air Pollution Control Device[1]	Types of Emissions Data Available
1	N/A	N/A
2	N/A	N/A
3	N/A	N/A

Indicate if Office of Solid Waste survey has been submitted in lieu of response by circling the appropriate response.

Yes 1

No 2

---

[1]Use the following codes to designate the air pollution control device:

S = Scrubber (include type of scrubber in parenthesis)
E = Electrostatic precipitator
O = Other (specify) _____

[__] Mark (X) this box if you attach a continuation sheet.

PART A EMPLOYMENT AND POTENTIAL EXPOSURE PROFILE

9.01 Mark (X) the appropriate column to indicate whether your company maintains records on the following data elements for hourly and salaried workers. Specify for each data element the year in which you began maintaining records and the number of years the records for that data element are maintained. (Refer to the instructions for further explanation and an example.)

CBI

[ ]

Data Element	Data are Maintained for: Hourly Workers	Salaried Workers	Year in Which Data Collection Began	Number of Years Records Are Maintained
Date of hire	X	X	UK	30
Age at hire	X	X	UK	30
Work history of individual before employment at your facility	N/A	N/A	UK	UK
Sex	X	X	UK	30
Race	X	X	UK	30
Job titles	X	X	UK	30
Start date for each job title	X	X	UK	30
End date for each job title	N/A	N/A	N/A	N/A
Work area industrial hygiene monitoring data	X	N/A	1981	N/A
Personal employee monitoring data	X	N/A	1981	N/A
Employee medical history	N/A	N/A	N/A	N/A
Employee smoking history	N/A	N/A	N/A	N/A
Accident history	X	X	UK	30
Retirement date	X	X	1967	30
Termination date	X	X	UK	30
Vital status of retirees	N/A	N/A	N/A	N/A
Cause of death data	N/A	N/A	N/A	N/A

[ ] Mark (X) this box if you attach a continuation sheet.

9.02 In accordance with the instructions, complete the following table for each activity in which you engage.

CBI

[ ]

a. Activity	b. Process Category	c. Yearly Quantity (kg)	d. Total Workers	e. Total Worker-Hours
Manufacture of the listed substance	Enclosed	N/A		
	Controlled Release	N/A		
	Open	N/A		
On-site use as reactant	Enclosed	N/A		
	Controlled Release	N/A		
	Open	39,255	20	41,600
On-site use as nonreactant	Enclosed	N/A		
	Controlled Release	N/A		
	Open	N/A		
On-site preparation of products	Enclosed	N/A		
	Controlled Release	N/A		
	Open	N/A		

1 shift/day x 8 hrs/shift x 40 hrs/wk x 52 weeks x 20 employees

8 hrs x 5 days/wk x 20 employees= 800 hrs/wk x 52 wks=41,600 hrs/yr.

[ ] Mark (X) this box if you attach a continuation sheet.

9.03 Provide a descriptive job title for each labor category at your facility that encompasses workers who may potentially come in contact with or be exposed to the listed substance.

CBI

[ ]

Labor Category	Descriptive Job Title
A	Pourer (rubber goods) 7
B	Mold cleaner (rubber goods) 1
C	Polyurethane equipment maintenance (pump tester) 1
D	Process worker 11
E	
F	
G	
H	
I	
J	

[ ] Mark (X) this box if you attach a continuation sheet.

9.04 In accordance with the instructions, provide your process block flow diagram(s) and indicate associated work areas.

CBI

[ ] Process type ..... Polyurethane Elastomer production line

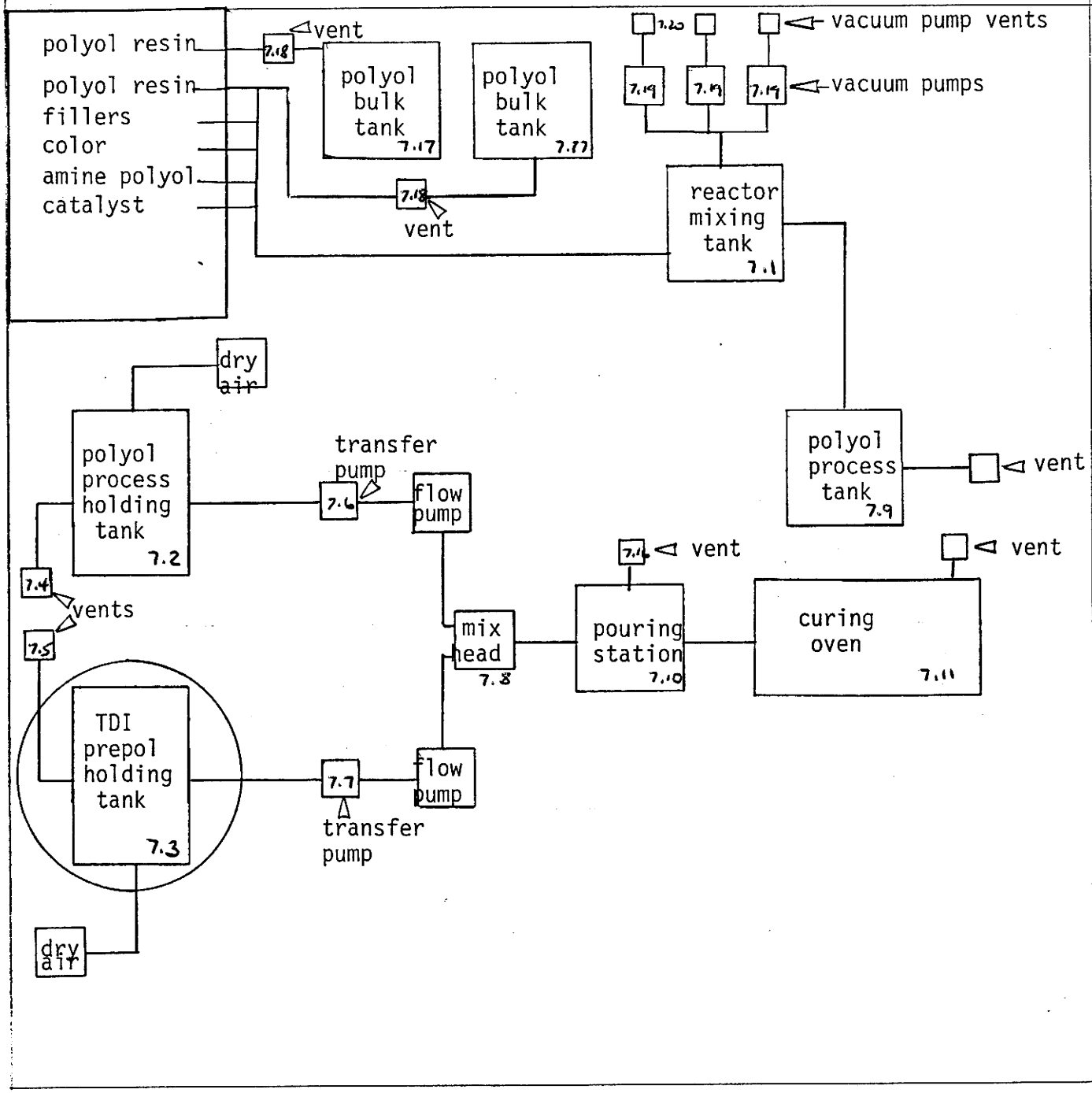

[ ] Mark (X) this box if you attach a continuation sheet.

9.05 Describe the various work area(s) shown in question 9.04 that encompass workers who may potentially come in contact with or be exposed to the listed substance. Add any additional areas not shown in the process block flow diagram in question 7.01 or 7.02. Photocopy this question and complete it separately for each process type.

CBI

[__] Process type ..... Polyurethane Elastomer production line

Work Area ID		Description of Work Areas and Worker Activities
1	7.3	Transfer TDI form truck into holding tank
2	7.8	TDI prepol entering mixing chamber
3	7.10	Pouring station were material enters molds
4		
5		
6		
7		
8		
9		
10		

[__] Mark (X) this box if you attach a continuation sheet.

9.06 Complete the following table for each work area identified in question 9.05, and for each labor category at your facility that encompasses workers who may potentially come in contact with or be exposed to the listed substance. Photocopy this question
CBI and complete it separately for each process type and work area.

[__] Process type ..... _____

Work area ..... _____

Labor Category	Number of Workers Exposed	Mode of Exposure (e.g., direct skin contact)	Physical State of Listed Substance[1]	Average Length of Exposure Per Day[2]	Number of Days per Year Exposed
UK	UK	UK	UK	UK	UK

[1]Use the following codes to designate the physical state of the listed substance at the point of exposure:

GC = Gas (condensible at ambient temperature and pressure)
GU = Gas (uncondensible at ambient temperature and pressure; includes fumes, vapors, etc.)
SO = Solid
SY = Sludge or slurry
AL = Aqueous liquid
OL = Organic liquid
IL = Immiscible liquid (specify phases, e.g., 90% water, 10% toluene)

[2]Use the following codes to designate average length of exposure per day:

A = 15 minutes or less
B = Greater than 15 minutes, but not exceeding 1 hour
C = Greater than one hour, but not exceeding 2 hours
D = Greater than 2 hours, but not exceeding 4 hours
E = Greater than 4 hours, but not exceeding 8 hours
F = Greater than 8 hours

[__] Mark (X) this box if you attach a continuation sheet.

9.07 For each labor category represented in question 9.06, indicate the 8-hour Time Weighted Average (TWA) exposure levels and the 15-minute peak exposure levels. Photocopy this question and complete it separately for each process type and work area.

CBI

[ ] Process type ..... Polyurethane Elastomer Pouring Line

Work area ..... Wedgelock Line #3

Labor Category	8-hour TWA Exposure Level (ppm, mg/m^3, other-specify)	15-Minute Peak Exposure Level (ppm, mg/m^3, other-specify)
556.687-026	0.0024 ppm	N/A
556.687-026	0.0012 ppm	N/A
556.687-018	0.0004 ppm	N/A
556.687-018	0.0004 ppm	N/A
556.687-022	0.0003 ppm	N/A

[ ] Mark (X) this box if you attach a continuation sheet.

PART B WORK PLACE MONITORING PROGRAM

9.08 If you monitor worker exposure to the listed substance, complete the following table.

CBI

[ ]

Sample/Test	Work Area ID	Testing Frequency (per year)	Number of Samples (per test)	Who Samples[1]	Analyzed In-House (Y/N)	Number of Years Records Maintained
Personal breathing zone		1	10	B	Y	8
General work area (air)	N/A	UK	UK	UK	UK	UK
Wipe samples	UK	UK	UK	UK	UK	UK
Adhesive patches	UK	UK	UK	UK	UK	UK
Blood samples	UK	UK	UK	UK	UK	UK
Urine samples	UK	UK	UK	UK	UK	UK
Respiratory samples	UK	UK	UK	UK	UK	UK
Allergy tests	UK	UK	UK	UK	UK	UK
Other (specify)						
Other (specify)						
Other (specify)						

[1]Use the following codes to designate who takes the monitoring samples:

A = Plant industrial hygienist
B = Insurance carrier
C = OSHA consultant
D = Other (specify) _____

[ ] Mark (X) this box if you attach a continuation sheet.

9.09 For each sample type identified in question 9.08, describe the type of sampling and analytical methodology used for each type of sample.
CBI

[ ]

Sample Type	Sampling and Analytical Methodology
TDI (impinger)	Colorimetry NIOSH 141
TDI (filters)	High pressure liquid chromatography NIOSH 347
N/A	N/A
N/A	N/A
N/A	N/A

9.10 If you conduct personal and/or ambient air monitoring for the listed substance, specify the following information for each equipment type used.

CBI

[ ]

Equipment Type[1]	Detection Limit[2]	Manufacturer	Averaging Time (hr)	Model Number
A	0.0024 ppm	Brooks	61.0 min	Model G
C	0.0003 ppm	Gilian	73.6 min	HFS 113
N/A	N/A	N/A	N/A	N/A
N/A	N/A	N/A	N/A	N/A
N/A	N/A	N/A	N/A	N/A

[1]Use the following codes to designate personal air monitoring equipment types:

A = Passive dosimeter
B = Detector tube
C = Charcoal filtration tube with pump
D = Other (specify) _____

Use the following codes to designate ambient air monitoring equipment types:

E = Stationary monitors located within work area
F = Stationary monitors located within facility
G = Stationary monitors located at plant boundary
H = Mobile monitoring equipment (specify) _____
I = Other (specify) _____

[2]Use the following codes to designate detection limit units:

A = ppm
B = Fibers/cubic centimeter (f/cc)
C = Micrograms/cubic meter (μ/m^3)

[ ] Mark (X) this box if you attach a continuation sheet.

9.11 If you conduct routine medical tests for monitoring the health effects of exposure to the listed substance, specify the type and frequency of the tests.

CBI

[ ] Test Description	Frequency (weekly, monthly, yearly, etc.)
Hearing tests	yearly

6-People in the Processing Dept.
2-People in the Burning Dept.
3-People in the Yard Dept.

NOTE: Above personnel tested due to noise level tests made throughout the plant and determined that these were in higher level areas.

[ ] Mark (X) this box if you attach a continuation sheet.

PART C ENGINEERING CONTROLS

9.12 Describe the engineering controls that you use to reduce or eliminate worker exposure to the listed substance. Photocopy this question and complete it separately for each process type and work area.

CBI

[ ] Process type .....

Work area .....Clay preparation & grinding dept.....

Engineering Controls	Used (Y/N)	Year Installed	Upgraded (Y/N)	Year Upgraded
Ventilation:				
Local exhaust	Y	1956	Y	1980
General dilution	N/A	N/A	N/A	N/A
Other (specify)				
Water spray	Y	1956	Y	1980
Vessel emission controls	Y	1956	Y	1980
Mechanical loading or packaging equipment	N/A	N/A	N/A	N/A
Other (specify)				
Operator Control Rm.	Y	1985	N/A	N/A

[X] Mark (X) this box if you attach a continuation sheet.

PART C ENGINEERING CONTROLS

9.12 Describe the engineering controls that you use to reduce or eliminate worker exposure to the listed substance. Photocopy this question and complete it separately for each process type and work area.

CBI

[ ] Process type .....

Work area .....Processing Dept.....

Engineering Controls	Used (Y/N)	Year Installed	Upgraded (Y/N)	Year Upgraded
Ventilation:				
Local exhaust	Y	1956	Y	1980
General dilution	N/A	N/A	N/A	N/A
Other (specify)				
Water spray	Y	1956	Y	1980
Vessel emission controls	Y	1956	Y	1980
Mechanical loading or packaging equipment	N/A	N/A	N/A	N/A
Other (specify)				
N/A				

[ ] Mark (X) this box if you attach a continuation sheet.

9.13 Describe all equipment or process modifications you have made within the 3 years prior to the reporting year that have resulted in a reduction of worker exposure to the listed substance. For each equipment or process modification described, state the percentage reduction in exposure that resulted. Photocopy this question and complete it separately for each process type and work area.

CBI

[ ] Process type .....

Work area .....Clay Preparation & grinding dept.52.....

Equipment or Process Modification	Reduction in Worker Exposure Per Year (%)
Air conditioned closed cab loader	50%
Operator closed control room	50%
Water truck purchase & use	25%

[X] Mark (X) this box if you attach a continuation sheet.

9.13 Describe all equipment or process modifications you have made within the 3 years prior to the reporting year that have resulted in a reduction of worker exposure to the listed substance. For each equipment or process modification described, state the percentage reduction in exposure that resulted. Photocopy this question and complete it separately for each process type and work area.

CBI

[ ] Process type .....

Work area .....Processing dept 52.....

Equipment or Process Modification	Reduction in Worker Exposure Per Year (%)
Clean up on off shift	20%
Power sweeping of dept.	20%

[X] Mark (X) this box if you attach a continuation sheet.

9.13 Describe all equipment or process modifications you have made within the 3 years prior to the reporting year that have resulted in a reduction of worker exposure to the listed substance. For each equipment or process modification described, state the percentage reduction in exposure that resulted. Photocopy this question and complete it separately for each process type and work area.

CBI

[ ] Process type .....

Work area ....Dept. 55- Yard.....

Equipment or Process Modification	Reduction in Worker Exposure Per Year (%)
Power sweeping of all yard area on scheduled basis	10%

[ ] Mark (X) this box if you attach a continuation sheet.

PART D PERSONAL PROTECTIVE AND SAFETY EQUIPMENT

9.14 Describe the personal protective and safety equipment that your workers wear or use in each work area in order to reduce or eliminate their exposure to the listed substance. Photocopy this question and complete it separately for each process type and work area.

CBI

[ ] Process type .....

Work area ....Dept. 56 Wedge lock.....

Equipment Types	Wear or Use (Y/N)
Respirators	Y
Safety goggles/glasses	Y
Face shields	Y
Coveralls	N
Bib aprons	N
Chemical-resistant gloves	Y
Other (specify)	
Safety shoes	Y
Safety hats	Y
Ear protection	Y

[ ] Mark (X) this box if you attach a continuation sheet.

9.15 If workers use respirators when working with the listed substance, specify for each process type, the work areas where the respirators are used, the type of respirators used, the average usage, whether or not the respirators were fit tested, and the type and frequency of the fit tests. Photocopy this question and complete it separately for each process type.

CBI

[ ] Process type ..... _____

Work Area	Respirator Type	Average Usage[1]	Fit Tested (Y/N)	Type of Fit Test[2]	Frequency of Fit Tests (per year)
[illegible]	[illegible]	[illegible]	[illegible]		
[illegible]					
[illegible]	[illegible]	[illegible]	[illegible]		
[illegible]	[illegible]		[illegible]		

[1]Use the following codes to designate average usage:

A = Daily
B = Weekly
C = Monthly
D = Once a year
E = Other (specify) _____

[2]Use the following codes to designate the type of fit test:

QL = Qualitative
QT = Quantitative

[ ] Mark (X) this box if you attach a continuation sheet.

PART E WORK PRACTICES

9.19 Describe all of the work practices and administrative controls used to reduce or eliminate worker exposure to the listed substance (e.g., restrict entrance only to authorized workers, mark areas with warning signs, insure worker detection and monitoring practices, provide worker training programs, etc.). Photocopy this question and complete it separately for each process type and work area.

CBI

[ ]

Process type ..... Urethane pouring lines

Work area .....

All personnel effected given Material Safety Data Sheets

Signs posted in effecting areas

Safety equipment supplied where applicable.

Hats, shoes guards, glasses, etc.

9.20 Indicate (X) how often you perform each housekeeping task used to clean up routine leaks or spills of the listed substance. Photocopy this question and complete it separately for each process type and work area.

Process type ..... Pouring area

Work area .....

Housekeeping Tasks	Less Than Once Per Day	1-2 Times Per Day	3-4 Times Per Day	More Than 4 Times Per Day
Sweeping		X		
Vacuuming		X		
Water flushing of floors				
Other (specify)				

[ ] Mark (X) this box if you attach a continuation sheet.

9.21 Do you have a written medical action plan for responding to routine or emergency exposure to the listed substance?

Routine exposure

Yes 1

No .....None..... 2

Emergency exposure

Yes 1

No .....None..... 2

If yes, where are copies of the plan maintained?

Routine exposure: _____

Emergency exposure: _____

9.22 Do you have a written leak and spill cleanup plan that addresses the listed substance? Circle the appropriate response.

Yes 1

No .....None..... 2

If yes, where are copies of the plan maintained? _____

Has this plan been coordinated with state or local government response organizations? Circle the appropriate response.

Yes 1

No .....None..... 2

9.23 Who is responsible for monitoring worker safety at your facility? Circle the appropriate response.

Plant safety specialist 1

Insurance carrier 2

OSHA consultant 3

Other (specify) General Foreman 4

[ ] Mark (X) this box if you attach a continuation sheet.

SECTION 10 ENVIRONMENTAL RELEASE

General Instructions:

Complete Part E (questions 10.23-10.35) for each non-routine release involving the listed substance that occurred during the reporting year. Report on all releases that are equal to or greater than the listed substance's reportable quantity value, RQ, unless the release is federally permitted as defined in 42 U.S.C. 9601, or is specifically excluded under the definition of release as defined in 40 CFR 302.3(22). Reportable quantities are codified in 40 CFR Part 302. If the listed substance is not a hazardous substance under the Comprehensive Environmental Response, Compensation, and Liability Act of 1980 (CERCLA) and, thus, does not have an RQ, then report releases that exceed 2,270 kg. If such a substance however, is designated as a CERCLA hazardous substance, then report those releases that are equal to or greater than the RQ. The facility may have answered these questions or similar questions under the Agency's Accidental Release Information Program and may already have this information readily available. Assign a number to each release and use this number throughout this part to identify the release. Releases over more than a 24-hour period are not single releases, i.e., the release of a chemical substance equal to or greater than an RQ must be reported as a separate release for each 24-hour period the release exceeds the RQ.

For questions 10.25-10.35, answer the questions for each release identified in question 10.23. Photocopy these questions and complete them separately for each release.

PART A GENERAL INFORMATION

10.01 Where is your facility located? Circle all appropriate responses.

CBI

[__] Industrial area ..... (1)

Urban area 2

Residential area 3

Agricultural area ..... (4)

Rural area 5

Adjacent to a park or a recreational area 6

Within 1 mile of a navigable waterway 7

Within 1 mile of a school, university, hospital, or nursing home facility 8

Within 1 mile of a non-navigable waterway 9

Other (specify) _____ 10

[__] Mark (X) this box if you attach a continuation sheet.

10.02 Specify the exact location of your facility (from central point where process unit is located) in terms of latitude and longitude or Universal Transverse Mercader (UTM) coordinates.

Latitude ..... 33 ° 49 ' 30 "

Longitude ..... 117 ° 31 ' 0 "

UTM coordinates ..... Zone N/A , Northing N/A , Easting N/A

10.03 If you monitor meteorological conditions in the vicinity of your facility, provide the following information.

Average annual precipitation ..... N/A inches/year

Predominant wind direction ..... N/A

10.04 Indicate the depth to groundwater below your facility.

Depth to groundwater ..... N/A meters

10.05 For each on-site activity listed, indicate (Y/N/NA) all routine releases of the listed substance to the environment. (Refer to the instructions for a definition of Y, N, and NA.)

CBI

[ ]

On-Site Activity	Environmental Release Air	Water	Land
Manufacturing	N/A	N/A	N/A
Importing	N/A	N/A	N/A
Processing	Y	N/A	N/A
Otherwise used	N/A	N/A	N/A
Product or residual storage	N/A	N/A	N/A
Disposal	N/A	N/A	N/A
Transport	N/A	N/A	N/A

[ ] Mark (X) this box if you attach a continuation sheet.

10.06 Provide the following information for the listed substance and specify the level of precision for each item. (Refer to the instructions for further explanation and an example.)

CBI

[ ]

Quantity discharged to the air	19,894	kg/yr ±	3.0 %
Quantity discharged in wastewaters	N/A	kg/yr ±	N/A %
Quantity managed as other waste in on-site treatment, storage, or disposal units	N/A	kg/yr ±	N/A %
Quantity managed as other waste in off-site treatment, storage, or disposal units	235	kg/yr ±	0.15 %

[ ] Mark (X) this box if you attach a continuation sheet.

10.08 Describe the control technologies used to minimize release of the listed substance for each process stream containing the listed substance as identified in your process block or residual treatment block flow diagram(s). Photocopy this question and complete it separately for each process type.

CBI

[ ] Process type ..... Polyurethane Pouring Line

Stream ID Code	Control Technology	Percent Efficiency
UK	UK	UK

[ ] Mark (X) this box if you attach a continuation sheet.

PART B RELEASE TO AIR

10.09 Point Source Emissions -- Identify each emission point source containing the listed substance in terms of a Stream ID Code as identified in your process block or residual treatment block flow diagram(s), and provide a description of each point source. Do not include raw material and product storage vents, or fugitive emission sources (e.g., equipment leaks). Photocopy this question and complete it separately for each process type.

CBI

[ ]

Process type ..... Mixing & metering equipment

Point Source ID Code	Description of Emission Point Source
7.4	Vent on holding tank
7.7	Transfer pump
7.8	Mixing head pouring gun
7.10	Pouring Station
7.16	Solvent flush

[ ] Mark (X) this box if you attach a continuation sheet.

10.12 If the listed substance is emitted in particulate form, indicate the particle size distribution for each Point Source ID Code identified in question 10.09. Photocopy this question and complete it separately for each emission point source.

CBI

[ ]

Point source ID code ..... N/A

Size Range (microns)	Mass Fraction (% ± % precision)
< 1	N/A
≥ 1 to < 10	N/A
≥ 10 to < 30	N/A
≥ 30 to < 50	N/A
≥ 50 to < 100	N/A
≥ 100 to < 500	N/A
≥ 500	N/A
	Total = 100%

[ ] Mark (X) this box if you attach a continuation sheet.

10.25 Complete the following information for each media into which the listed substance was released. Any volatile substance that was released to land, but that was expected to volatilize, should be listed as a release to air.

Release No. ..... N/A

Media	Quantity (kg)	Method of Release	Migration Beyond Boundaries (Y/N)	Quantity Migrated (kg)
Land	N/A	N/A	N/A	N/A
Air	N/A	N/A	N/A	N/A
Groundwater	N/A	N/A	N/A	N/A
Surface water	N/A	N/A	N/A	N/A

10.26 Specify the physical state and concentration of the listed substance at the time and point of release.

Release No. ..... N/A

Point of release ..... N/A

Physical state ..... N/A

Concentration (%) ..... N/A

[ ] Mark (X) this box if you attach a continuation sheet.

10.27 Circle all appropriate responses relating to the cause and the effects of the release.

Release No. ..... N/A

Cause of Release

Equipment failure 1

Operator error 2

Bypass condition 3

Upset condition 4

Fire 5

Unknown 6

Other (specify) _____ 7

Results of Release

Spill 1

Vapor release 2

Explosion 3

Fire 4

Other (specify) _____ 5

[ ] Mark (X) this box if you attach a continuation sheet.

10.28 Specify which authorities were notified of the release.

Release No. ..... N/A

a. Federal

Agency [__]

Office [__]

Contact Person [__]

Address [__]
Street

[__]
City

[__][__]
State

Telephone Number ..... [__][__][__]-[__][__][__]-[__][__][__][__]

Date Notified ..... [__][__] [__][__] [__][__]
Mo. Day Year

Time Notified ..... [__][__][__][__] am/pm

b. State

Agency [__]

Office [__]

Contact Person [__]

Address [__]
Street

[__]
City

[__][__]
State

Telephone Number ..... [__][__][__]-[__][__][__]-[__][__][__][__]

Date Notified ..... [__][__] [__][__] [__][__]
Mo. Day Year

Time Notified ..... [__][__][__][__] am/pm

10.28 continued below

[__] Mark (X) this box if you attach a continuation sheet.

10.28 (continued)

c. Local

Agency [__]

Office [__]

Contact Person [__]

Address [__]
Street

[__]
City

[__][__]
State

Telephone Number ..... [__][__][__]-[__][__][__]-[__][__][__][__]

Date Notified ..... [__][__] [__][__] [__][__]
Mo. Day Year

Time Notified ..... [__][__][__][__] am/pm

10.29 For each of the proximities listed below, indicate whether the population living within that proximity was notified of, or evacuated because of the release. Specify who notified the population, the number of people evacuated, if any, and the date and time of day the evacuation began.

Release No. ..... N/A

Proximity to the Release	Notified of Release (Y/N)	Notifying Person	Notifying Person's Telephone Number	Area Evacuated (Y/N)	Number of Persons Evacuated	Date and Time of Day Evacuation Began
1/4 mile	N/A					
1/2 mile	N/A					
1 mile	N/A					
Other (specify)	N/A					

[__] Mark (X) this box if you attach a continuation sheet.

10.30 Specify the number of personal injuries or casualties resulting from the release.

Release No. ..... N/A

Number of injuries to facility employees ..... N/A

Number of injuries to general population ..... N/A

Number of deaths to facility employees ..... N/A

Number of deaths to general population ..... N/A

10.31 Indicate who conducted cleanup activities, and the dates over which the cleanup was performed.

Release No. ..... N/A

Name [__]

Address [__]
Street

[__]
City

[__][__] [__][__][__][__][__]--[__][__][__][__]
State Zip

Telephone Number ..... [__][__][__]-[__][__][__]-[__][__][__][__]

Date Cleanup Initiated ..... [__][__][__][__]
Mo. Year

Date Cleanup Completed (or expected) ..... [__][__][__][__]
Mo. Year

10.32 Briefly describe the release prevention practices and policies (backup systems, containment systems, training programs, etc.) in place at the facility at the time the release occurred.

Release No. ..... N/A

[__] Mark (X) this box if you attach a continuation sheet.

10.10 Emission Characteristics - - Characterize the emissions for each Point Source ID Code identified in question 10.09 by completing the following table.

CBI

[ ]

Point Source ID Code	Physical State[1]	Average Emissions (kg/day)	Frequency[2] (days/yr)	Duration[3] (min/day)	Average Emission Factor[4]	Maximum Emission Rate (kg/min)	Maximum Emission Rate Frequency (events/yr)	Maximum Emission Rate Duration (min/event)
UK	UK	UK	UK	UK	UK	UK	UK	UK

[1]Use the following codes to designate physical state at the point of release:
G = Gas; V = Vapor; P = Particulate; A = Aerosol; O = Other (specify) _____

[2]Frequency of emission at any level of emission

[3]Duration of emission at any level of emission

[4]Average Emission Factor — Provide estimated (± 25 percent) emission factor (kg of emission per kg of production of listed substance)

[ ] Mark (X) this box if you attach a continuation sheet.

10.11 Stack Parameters -- Identify the stack parameters for each Point Source ID Code identified in question 10.09 by completing the following table.

CBI

[__]

Point Source ID Code	Stack Height(m)	Stack Inner Diameter (at outlet) (m)	Exhaust Temperature (°C)	Emission Exit Velocity (m/sec)	Building Height(m)[1]	Building Width(m)[2]	Vent Type[3]
UK	UK	UK	UK	UK	UK	UK	UK

[1]Height of attached or adjacent building

[2]Width of attached or adjacent building

[3]Use the following codes to designate vent type:

H = Horizontal
V = Vertical

[__] Mark (X) this box if you attach a continuation sheet.

PART C FUGITIVE EMISSIONS

10.13 Equipment Leaks -- Complete the following table by providing the number of equipment types listed which are exposed to the listed substance and which are in service according to the specified weight percent of the listed substance passing through the component. Do this for each process type identified in your process block or residual treatment block flow diagram(s). Do not include equipment types that are not exposed to the listed substance. If this is a batch or intermittently operated process, give an overall percentage of time per year that the process type is exposed to the listed substance. Photocopy this question and complete it separately for each process type.

CBI

[__] Process type ..... _____

Percentage of time per year that the listed substance is exposed to this process type ..... _____%

Equipment Type	Number of Components in Service by Weight Percent of Listed Substance in Process Stream					
	Less than 5%	5-10%	11-25%	26-75%	76-99%	Greater than 99%
Pump seals[1]						
Packed	UK	UK	UK	UK	UK	UK
Mechanical	UK					
Double mechanical[2]	UK					
Compressor seals[1]	UK					
Flanges	UK					
Valves						
Gas[3]	UK					
Liquid	UK					
Pressure relief devices[4] (Gas or vapor only)	UK					
Sample connections						
Gas	UK					
Liquid	UK					
Open-ended lines[5] (e.g., purge, vent)						
Gas	UK					
Liquid	UK					

[1]List the number of pump and compressor seals, rather than the number of pumps or compressors

10.13 continued on next page

[__] Mark (X) this box if you attach a continuation sheet.

10.13 (continued)

[2]If double mechanical seals are operated with the barrier (B) fluid at a pressure greater than the pump stuffing box pressure and/or equipped with a sensor (S) that will detect failure of the seal system, the barrier fluid system, or both, indicate with a "B" and/or an "S", respectively

[3]Conditions existing in the valve during normal operation

[4]Report all pressure relief devices in service, including those equipped with control devices

[5]Lines closed during normal operation that would be used during maintenance operations

---

10.14 Pressure Relief Devices with Controls -- Complete the following table for those pressure relief devices identified in 10.13 to indicate which pressure relief devices in service are controlled. If a pressure relief device is not controlled, enter "None" under column c.

CBI

[ ]

a. Number of Pressure Relief Devices	b. Percent Chemical in Vessel[1]	c. Control Device	d. Estimated Control Efficiency[2]
UK	UK	UK	UK

[1]Refer to the table in question 10.13 and record the percent range given under the heading entitled "Number of Components in Service by Weight Percent of Listed Substance" (e.g., <5%, 5-10%, 11-25%, etc.)

[2]The EPA assigns a control efficiency of 100 percent for equipment leaks controlled with rupture discs under normal operating conditions. The EPA assigns a control efficiency of 98 percent for emissions routed to a flare under normal operating conditions

---

[ ] Mark (X) this box if you attach a continuation sheet.

10.15 Equipment Leak Detection -- If a formal leak detection and repair program is in place, complete the following table regarding those leak detection and repair procedures. Photocopy this question and complete it separately for each process type.

CBI

[__] Process type ..... _____

Equipment Type	Leak Detection Concentration (ppm or mg/m^3) Measured at ____ Inches from Source	Detection Device[1]	Frequency of Leak Detection (per year)	Repairs Initiated (days after detection)	Repairs Completed (days after initiated)
Pump seals					
Packed	N/A	N/A	N/A	N/A	N/A
Mechanical					
Double mechanical					
Compressor seals					
Flanges					
Valves					
Gas					
Liquid					
Pressure relief devices (gas or vapor only)					
Sample connections					
Gas					
Liquid					
Open-ended lines					
Gas					
Liquid					

[1]Use the following codes to designate detection device:

POVA = Portable organic vapor analyzer
FPM = Fixed point monitoring
O = Other (specify) _____

[__] Mark (X) this box if you attach a continuation sheet.

[ ] Mark (X) this box if you attach a continuation sheet.

10.16 Raw Material, Intermediate and Product Storage Emissions - - Complete the following table by providing the information on each liquid raw material, intermediate, and product storage vessel containing the listed substance as identified in your process block or residual treatment block flow diagram(s).

CBI

[ ]

Vessel Type[1]	Floating Roof Seals[2]	Composition of Stored Materials[3]	Throughput (liters per year)	Vessel Filling Rate (gpm)	Vessel Filling Duration (min)	Vessel Inner Diameter (m)	Vessel Height (m)	Operating Vessel Volume (l)	Vessel Emission Controls[4]	Design Flow Rate[5]	Vent Diameter (cm)	Control Efficiency (%)	Basis for Estimate[6]
UK	UK	UK	UK	UK	UK	UK	UK	UK	UK	UK	UK	UK	UK

[1]Use the following codes to designate vessel type:

F = Fixed roof
CIF = Contact internal floating roof
NCIF = Noncontact internal floating roof
EFR = External floating roof
P = Pressure vessel (indicate pressure rating)
H = Horizontal
U = Underground

[2]Use the following codes to designate floating roof seals:

MS1 = Mechanical shoe, primary
MS2 = Shoe-mounted secondary
MS2R = Rim-mounted, secondary
LM1 = Liquid-mounted resilient filled seal, primary
LM2 = Rim-mounted shield
LMW = Weather shield
VM1 = Vapor mounted resilient filled seal, primary
VM2 = Rim-mounted secondary
VMW = Weather shield

[3]Indicate weight percent of the listed substance. Include the total volatile organic content in parenthesis

[4]Other than floating roofs

[5]Gas/vapor flow rate the emission control device was designed to handle (specify flow rate units)

[6]Use the following codes to designate basis for estimate of control efficiency:

C = Calculations
S = Sampling

PACIFIC CLAY PRODUCTS, INC.

20325 Old Highway 71 at Cajalco Road / P.O. Box 1149 / Corona, California 91720

TO: DOCUMENT PROCESSING CENTER
OFFICE of TOXIC SUBSTANCES, TS-790
U.S. ENVIRONMENTAL PROTECTION AGENCY
401 M STREET, SW
WASHINGTON, DC 20460
Attn: CAIR Reporting Office

CORONA CALIF. JUL -6'89

U.S. POSTAGE ≈4.15

PB METER 2057958

CERTIFIED

P 365 977 841

MAIL