CONTAINS NO CBI

EPA

Form Approved
OMB No. 2010-0019
Approval Expires 12-31-89

EPA-OTS

000622511H

90-890000404

89 JUL -5 AM 9:20

UNITED STATES ENVIRONMENTAL PROTECTION AGENCY

Comprehensive Assessment Information Rule

REPORTING FORM

When completed, send this form to:	For Agency Use Only:
Document Processing Center Office of Toxic Substances, TS-790 U.S. Environmental Protection Agency 401 M Street, SW Washington, DC 20460 Attention: CAIR Reporting Office	Date of Receipt: _____ Document Control Number: _____ Docket Number: _____

EPA Form 7710-52

SECTION 1 GENERAL MANUFACTURER, IMPORTER, AND PROCESSOR INFORMATION

PART A GENERAL REPORTING INFORMATION

1.01 This Comprehensive Assessment Information Rule (CAIR) Reporting Form has been completed in response to the Federal Register Notice of..... [1][2] [2][2] [8][8]
mo. day year

CBI

[ ] a. If a Chemical Abstracts Service Number (CAS No.) is provided in the Federal Register, list the CAS No. ..... [0][2][6][4][7][1]-[6][2]-[5]

b. If a chemical substance CAS No. is not provided in the Federal Register, list either (i) the chemical name, (ii) the mixture name, or (iii) the trade name of the chemical substance as provided in the Federal Register.

(i) Chemical name as listed in the rule ..... N/A

(ii) Name of mixture as listed in the rule .... _____

(iii) Trade name as listed in the rule ..... _____

c. If a chemical category is provided in the Federal Register, report the name of the category as listed in the rule, the chemical substance CAS No. you are reporting on which falls under the listed category, and the chemical name of the substance you are reporting on which falls under the listed category.

Name of category as listed in the rule ..... N/A

CAS No. of chemical substance ..... [ ][ ][ ][ ][ ][ ]-[ ][ ]-[ ]

Name of chemical substance ..... _____

1.02 Identify your reporting status under CAIR by circling the appropriate response(s).

CBI

[ ]

Manufacturer 1

Importer 2

Processor ..... (3)

X/P manufacturer reporting for customer who is a processor 4

X/P processor reporting for customer who is a processor 5

[ ] Mark (X) this box if you attach a continuation sheet.

1.03 Does the substance you are reporting on have an "x/p" designation associated with it in the above-listed Federal Register Notice?

CBI

[ ]

Yes ..... [X] Go to question 1.04

No ..... [ ] Go to question 1.05

1.04 a. Do you manufacture, import, or process the listed substance and distribute it under a trade name(s) different than that listed in the Federal Register Notice? Circle the appropriate response.

CBI

[ ]

Yes 1

No ..... (2)

b. Check the appropriate box below:

[ ] You have chosen to notify your customers of their reporting obligations

Provide the trade name(s) .... Not Applicable

[ ] You have chosen to report for your customers

[ ] You have submitted the trade name(s) to EPA one day after the effective date of the rule in the Federal Register Notice under which you are reporting.

1.05 If you buy a trade name product and are reporting because you were notified of your reporting requirements by your trade name supplier, provide that trade name.

CBI

[ ]

Trade name ..... Voronate(R) T-80 Type II Toluene Di-isocyanate

Is the trade name product a mixture? Circle the appropriate response.

Yes 1

No ..... (2)

1.06 Certification -- The person who is responsible for the completion of this form must sign the certification statement below:

CBI

[ ]

"I hereby certify that, to the best of my knowledge and belief, all information entered on this form is complete and accurate."

Clinton McDuffee
NAME

SIGNATURE

6/20/89
DATE SIGNED

Plant Manager
TITLE

(404) 922-0100
TELEPHONE NO.

[ ] Mark (X) this box if you attach a continuation sheet.

1.07 Exemptions From Reporting -- If you have provided EPA or another Federal agency with the required information on a CAIR Reporting Form for the listed substance within the past 3 years, and this information is current, accurate, and complete for the time period specified in the rule, then sign the certification below. You are required to complete section 1 of this CAIR form and provide any information now required but not previously submitted. Provide a copy of any previous submissions along with your Section 1 submission.

CBI [__]

"I hereby certify that, to the best of my knowledge and belief, all required information which I have not included in this CAIR Reporting Form has been submitted to EPA within the past 3 years and is current, accurate, and complete for the time period specified in the rule."

NOT APPLICABLE		
NAME	SIGNATURE	DATE SIGNED
TITLE	(_____) _____ - _____ TELEPHONE NO.	DATE OF PREVIOUS SUBMISSION

1.08 CBI Certification -- If you have asserted any CBI claims in this report you must certify that the following statements truthfully and accurately apply to all of those confidentiality claims which you have asserted.

CBI [__]

"My company has taken measures to protect the confidentiality of the information, and it will continue to take these measures; the information is not, and has not been, reasonably ascertainable by other persons (other than government bodies) by using legitimate means (other than discovery based on a showing of special need in a judicial or quasi-judicial proceeding) without my company's consent; the information is not publicly available elsewhere; and disclosure of the information would cause substantial harm to my company's competitive position."

NOT APPLICABLE		
NAME	SIGNATURE	DATE SIGNED
TITLE	(_____) _____ TELEPHONE NO.	

[__] Mark (X) this box if you attach a continuation sheet.

PART B CORPORATE DATA

1.09 Facility Identification

CBI Name [S][C][O][T][F][O][A][M][ ][C][O][R][P][O][R][A][T][I][O][N][ ][ ][ ][ ][ ]

[ ] Address [1][7][0][5][A][ ][R][O][C][K][D][A][L][E][ ][I][N][D][.][ ][B][L][V][D][.]
Street

[C][O][N][Y][E][R][S][ ][ ][ ][ ][ ][ ][ ][ ][ ][ ][ ][ ][ ][ ][ ][ ][ ]
City

[G][A] [3][0][2][0][7]--[ ][ ][ ][ ]
State Zip

Dun & Bradstreet Number .....[1][0]-[8][2][2]-[3][8][9][2]

EPA ID Number .....GAD..[0][4][5][8][2][4][9][7][6]

Employer ID Number .....22.[-][2][4][7][2][8][8][5]

Primary Standard Industrial Classification (SIC) Code .....[3][0][8][6]

Other SIC Code .....[ ][ ][ ][ ]

Other SIC Code .....[ ][ ][ ][ ]

1.10 Company Headquarters Identification

CBI Name [S][C][O][T][F][O][A][M][ ][C][O][R][P][O][R][A][T][I][O][N][ ][ ][ ][ ][ ]

[ ] Address [1][5][0][0][ ][E][ ][S][E][C][O][N][D][ ][S][T][R][E][E][T][ ][ ][ ][ ][ ]
Street

[E][D][D][Y][S][T][O][N][E][ ][ ][ ][ ][ ][ ][ ][ ][ ][ ][ ][ ][ ][ ][ ]
City

[P][A] [1][9][0][1][3]--[ ][ ][ ][ ]
State Zip

Dun & Bradstreet Number .....[1][0]-[8][2][2]-[3][8][9][2]

Employer ID Number .....22.[-][2][4][7][2][8][8][5]

[ ] Mark (X) this box if you attach a continuation sheet.

1.11 Parent Company Identification

CBI Name [K][N][O][L][L][ ][I][N][T][E][R][N][A][T][I][O][N][A][L][ ][ ][ ][ ][ ][ ]

[ ] Address [S][U][I][T][E][ ][5][9][0][0][ ][1][5][3][ ][E][ ][5][3][R][D][ ][S][T][ ]
Street

[N][E][W][ ][Y][O][R][K][ ][ ][ ][ ][ ][ ][ ][ ][ ][ ][ ][ ][ ][ ][ ][ ][ ][ ][ ]
City

[N][Y] [1][0][0][2][2]--[ ][ ][ ][ ]
State Zip

Dun & Bradstreet Number .....[0][4]-[8][3][0]-[8][0][2][7]

1.12 Technical Contact

CBI Name [C][L][I][N][T][O][N][ ][M][C][ ][D][U][F][F][E][E][ ][ ][ ][ ][ ][ ][ ][ ][ ]

[ ] Title [P][L][A][N][T][ ][M][A][N][A][G][E][R][ ][ ][ ][ ][ ][ ][ ][ ][ ][ ][ ][ ][ ]

Address [1][7][0][5][A][ ][R][O][C][K][D][A][L][E][ ][I][N][D][ ][B][L][V][D][ ][ ]
Street

[C][O][N][Y][E][R][S][ ]
City

[G][A] [3][0][2][0][7]--[ ][ ][ ][ ]
State Zip

Telephone Number .....[4][0][4]-[9][2][2]-[0][1][0][0]

1.13 This reporting year is from ..... [0][1] [8][8] to [1][2] [8][8]
Mo. Year Mo. Year

[ ] Mark (X) this box if you attach a continuation sheet.

1.14 Facility Acquired -- If you purchased this facility during the reporting year, provide the following information about the seller:

CBI Name of Seller [_]

[_] Mailing Address [_] Street

[_] City

[_] State [_]--[_] Zip

Employer ID Number .... [_]

Date of Sale .... [_] Mo. [_] Day [_] Year

Contact Person [_]

Telephone Number .... [_]-[_]-[_]

NOT APPLICABLE

1.15 Facility Sold -- If you sold this facility during the reporting year, provide the following information about the buyer:

CBI Name of Buyer [_]

[_] Mailing Address [_] Street

[_] City

[_] State [_]--[_] Zip

Employer ID Number .... [_]

Date of Purchase .... [_] Mo. [_] Day [_] Year

Contact Person [_]

Telephone Number .... [_]-[_]-[_]

NOT APPLICABLE

[_] Mark (X) this box if you attach a continuation sheet.

1.16 For each classification listed below, state the quantity of the listed substance that was manufactured, imported, or processed at your facility during the reporting year.

CBI

[__]

Classification	Quantity (kg/yr)
Manufactured	NOT APPLICABLE
Imported	NOT APPLICABLE
Processed (include quantity repackaged)	1,381,000
Of that quantity manufactured or imported, report that quantity:	
In storage at the beginning of the reporting year	NOT APPLICABLE
For on-site use or processing	NOT APPLICABLE
For direct commercial distribution (including export)	NOT APPLICABLE
In storage at the end of the reporting year	NOT APPLICABLE
Of that quantity processed, report that quantity:	
In storage at the beginning of the reporting year	24,500
Processed as a reactant (chemical producer)	NOT APPLICABLE
Processed as a formulation component (mixture producer)	NOT APPLICABLE
Processed as an article component (article producer)	1,381,000
Repackaged (including export)	NOT APPLICABLE
In storage at the end of the reporting year	227,600

[__] Mark (X) this box if you attach a continuation sheet.

PART C IDENTIFICATION OF MIXTURES

1.17 Mixture -- If the listed substance on which you are required to report is a mixture or a component of a mixture, provide the following information for each component chemical. (If the mixture composition is variable, report an average percentage of each component chemical for all formulations.)

CBI

[ ]

Component Name	Supplier Name	Average % Composition by Weight (specify precision, e.g., 45% ± 0.5%)
Not Applicable	Not Applicable	Not Applicable
		Total 100%

[ ] Mark (X) this box if you attach a continuation sheet.

2.04 State the quantity of the listed substance that your facility manufactured, imported, or processed during the 3 corporate fiscal years preceding the reporting year in descending order.

CBI

[ ] Year ending ..... [1]2] [8]7]
Mo. Year

Quantity manufactured ..... Not Applicable kg

Quantity imported ..... Not Applicable kg

Quantity processed ..... 1,450,000 kg

Year ending ..... [1]2] [8]6]
Mo. Year

Quantity manufactured ..... Not Applicable kg

Quantity imported ..... Not Applicable kg

Quantity processed ..... 1,347,000 kg

Year ending ..... [1]2] [8]5]
Mo. Year

Quantity manufactured ..... Not Applicable kg

Quantity imported ..... Not Applicable kg

Quantity processed ..... 1,535,000 kg

2.05 Specify the manner in which you manufactured the listed substance. Circle all appropriate process types.

CBI

[ ]

Continuous process ..... Not Applicable 1

Semicontinuous process ..... Not Applicable 2

Batch process ..... Not Applicable 3

[ ] Mark (X) this box if you attach a continuation sheet.

2.06 Specify the manner in which you processed the listed substance. Circle all
CBI appropriate process types.

[ ]

Continuous process 1

Semicontinuous process ..... (2)

Batch process 3

2.07 State your facility's name-plate capacity for manufacturing or processing the listed substance. (If you are a batch manufacturer or batch processor, do not answer this
CBI question.)

[ ]

Manufacturing capacity ..... NOT APPLICABLE kg/yr

Processing capacity ..... UNKNOWN kg/yr

2.08 If you intend to increase or decrease the quantity of the listed substance manufactured, imported, or processed at any time after your current corporate fiscal year, estimate the increase or decrease based upon the reporting year's production
CBI volume.

[ ]

	Manufacturing Quantity (kg)	Importing Quantity (kg)	Processing Quantity (kg)
Amount of increase			NOT APPLICABLE
Amount of decrease			NOT APPLICABLE

[ ] Mark (X) this box if you attach a continuation sheet.

2.09 For the three largest volume manufacturing or processing process types involving the listed substance, specify the number of days you manufactured or processed the listed substance during the reporting year. Also specify the average number of hours per day each process type was operated. (If only one or two operations are involved, list those.)

CBI

[__]

	Days/Year	Average Hours/Day
Process Type #1 (The process type involving the largest quantity of the listed substance.)		
Manufactured	N/A	N/A
Processed	248	1½
Process Type #2 (The process type involving the 2nd largest quantity of the listed substance.)		
Manufactured	N/A	N/A
Processed	N/A	N/A
Process Type #3 (The process type involving the 3rd largest quantity of the listed substance.)		
Manufactured	N/A	N/A
Processed	N/A	N/A

2.10 State the maximum daily inventory and average monthly inventory of the listed substance that was stored on-site during the reporting year in the form of a bulk chemical.

CBI

[__]

Maximum daily inventory	N/A	kg
Average monthly inventory	N/A	kg

[__] Mark (X) this box if you attach a continuation sheet.

2.11 Related Product Types -- List any byproducts, coproducts, or impurities present with the listed substance in concentrations greater than 0.1 percent as it is manufactured, imported, or processed. The source of byproducts, coproducts, or impurities means the source from which the byproducts, coproducts, or impurities are made or introduced into the product (e.g., carryover from raw material, reaction product, etc.).

CBI

[__]

CAS No.	Chemical Name	Byproduct, Coproduct or Impurity[1]	Concentration (%) (specify ± % precision)	Source of Byproducts, Coproducts, or Impurities
Not Known	Not Known	Not Known	Not Known	Not Known

[1]Use the following codes to designate byproduct, coproduct, or impurity:

B = Byproduct
C = Coproduct
I = Impurity

[__] Mark (X) this box if you attach a continuation sheet.

2.12 Existing Product Types -- List all existing product types which you manufactured, imported, or processed using the listed substance during the reporting year. List the quantity of listed substance you use for each product type as a percentage of the total volume of listed substance used during the reporting year. Also list the quantity of listed substance used captively on-site as a percentage of the value listed under column b., and the types of end-users for each product type. (Refer to the instructions for further explanation and an example.)

CBI
[ ]

a. Product Types[1]	b. % of Quantity Manufactured, Imported, or Processed	c. % of Quantity Used Captively On-Site	d. Type of End-Users[2]
B	100	100	I

[1]Use the following codes to designate product types:

A = Solvent
B = Synthetic reactant
C = Catalyst/Initiator/Accelerator/Sensitizer
D = Inhibitor/Stabilizer/Scavenger/Antioxidant
E = Analytical reagent
F = Chelator/Coagulant/Sequestrant
G = Cleanser/Detergent/Degreaser
H = Lubricant/Friction modifier/Antiwear agent
I = Surfactant/Emulsifier
J = Flame retardant
K = Coating/Binder/Adhesive and additives
L = Moldable/Castable/Rubber and additives
M = Plasticizer
N = Dye/Pigment/Colorant/Ink and additives
O = Photographic/Reprographic chemical and additives
P = Electrodeposition/Plating chemicals
Q = Fuel and fuel additives
R = Explosive chemicals and additives
S = Fragrance/Flavor chemicals
T = Pollution control chemicals
U = Functional fluids and additives
V = Metal alloy and additives
W = Rheological modifier
X = Other (specify) _____

[2]Use the following codes to designate the type of end-users:

I = Industrial
CM = Commercial
CS = Consumer
H = Other (specify) _____

[ ] Mark (X) this box if you attach a continuation sheet.

2.13 Expected Product Types -- Identify all product types which you expect to manufacture, import, or process using the listed substance at any time after your current corporate fiscal year. For each use, specify the quantity you expect to manufacture, import, or process for each use as a percentage of the total volume of listed substance used during the reporting year. Also list the quantity of listed substance used captively on-site as a percentage of the value listed under column b., and the types of end-users for each product type. (Refer to the instructions for further explanation and an example.)

CBI
[__]

a. Product Types[1]	b. % of Quantity Manufactured, Imported, or Processed	c. % of Quantity Used Captively On-Site	d. Type of End-Users[2]
B	100%	100%	Not Applicable

[1]Use the following codes to designate product types:

A = Solvent
B = Synthetic reactant
C = Catalyst/Initiator/Accelerator/Sensitizer
D = Inhibitor/Stabilizer/Scavenger/Antioxidant
E = Analytical reagent
F = Chelator/Coagulant/Sequestrant
G = Cleanser/Detergent/Degreaser
H = Lubricant/Friction modifier/Antiwear agent
I = Surfactant/Emulsifier
J = Flame retardant
K = Coating/Binder/Adhesive and additives
L = Moldable/Castable/Rubber and additives
M = Plasticizer
N = Dye/Pigment/Colorant/Ink and additives
O = Photographic/Reprographic chemical and additives
P = Electrodeposition/Plating chemicals
Q = Fuel and fuel additives
R = Explosive chemicals and additives
S = Fragrance/Flavor chemicals
T = Pollution control chemicals
U = Functional fluids and additives
V = Metal alloy and additives
W = Rheological modifier
X = Other (specify) _____

[2]Use the following codes to designate the type of end-users:

I = Industrial
CM = Commercial
CS = Consumer
H = Other (specify) _____

[__] Mark (X) this box if you attach a continuation sheet.

2.14 CBI [__] Final Product -- Complete the following table for each type of final product manufactured, imported, or processed at your facility that contains the listed substance other than as an impurity.

a. Product Type[1]	b. Final Product's Physical Form[2]	c. Average % Composition of Listed Substance in Final Product	d. Type of End-Users[3]
Not Applicable	Not Applicable	Not Applicable	Not Applicable

[1]Use the following codes to designate product types:

A = Solvent
B = Synthetic reactant
C = Catalyst/Initiator/Accelerator/Sensitizer
D = Inhibitor/Stabilizer/Scavenger/Antioxidant
E = Analytical reagent
F = Chelator/Coagulant/Sequestrant
G = Cleanser/Detergent/Degreaser
H = Lubricant/Friction modifier/Antiwear agent
I = Surfactant/Emulsifier
J = Flame retardant
K = Coating/Binder/Adhesive and additives
L = Moldable/Castable/Rubber and additives
M = Plasticizer
N = Dye/Pigment/Colorant/Ink and additives
O = Photographic/Reprographic chemical and additives
P = Electrodeposition/Plating chemicals
Q = Fuel and fuel additives
R = Explosive chemicals and additives
S = Fragrance/Flavor chemicals
T = Pollution control chemicals
U = Functional fluids and additives
V = Metal alloy and additives
W = Rheological modifier
X = Other (specify) _____

[2]Use the following codes to designate the final product's physical form:

A = Gas
B = Liquid
C = Aqueous solution
D = Paste
E = Slurry
F1 = Powder
F2 = Crystalline solid
F3 = Granules
F4 = Other solid
G = Gel
H = Other (specify) _____

[3]Use the following codes to designate the type of end-users:

I = Industrial
CM = Commercial
CS = Consumer
H = Other (specify) _____

[__] Mark (X) this box if you attach a continuation sheet.

2.15 CBI Circle all applicable modes of transportation used to deliver bulk shipments of the listed substance to off-site customers.

[__] Truck ..... Not Applicable 1

Railcar ..... Not Applicable 2

Barge, Vessel ..... Not Applicable 3

Pipeline ..... Not Applicable 4

Plane ..... Not Applicable 5

Other (specify) _____ ..... Not Applicable 6

2.16 CBI Customer Use -- Estimate the quantity of the listed substance used by your customers or prepared by your customers during the reporting year for use under each category of end use listed (i-iv).

[__]

Category of End Use

i. Industrial Products

Chemical or mixture ..... Not Applicable kg/yr

Article ..... Not Applicable kg/yr

ii. Commercial Products

Chemical or mixture ..... Not Applicable kg/yr

Article ..... Not Applicable kg/yr

iii. Consumer Products

Chemical or mixture ..... Not Applicable kg/yr

Article ..... Not Applicable kg/yr

iv. Other

Distribution (excluding export) ..... Not Applicable kg/yr

Export ..... Not Applicable kg/yr

Quantity of substance consumed as reactant ..... Not Applicable kg/yr

Unknown customer uses ..... Not Applicable kg/yr

[__] Mark (X) this box if you attach a continuation sheet.

SECTION 3 PROCESSOR RAW MATERIAL IDENTIFICATION

PART A GENERAL DATA

3.01 Specify the quantity purchased and the average price paid for the listed substance for each major source of supply listed. Product trades are treated as purchases.
CBI The average price is the market value of the product that was traded for the listed substance.
[ ]

Source of Supply	Quantity (kg)	Average Price ($/kg)
The listed substance was manufactured on-site.	N/A	N/A
The listed substance was transferred from a different company site.	N/A	N/A
The listed substance was purchased directly from a manufacturer or importer.	1,381,000	2.112
The listed substance was purchased from a distributor or repackager.	N/A	N/A
The listed substance was purchased from a mixture producer.	N/A	N/A

3.02 Circle all applicable modes of transportation used to deliver the listed substance to your facility.
CBI
[ ]

Truck 1

Railcar ..... (2)

Barge, Vessel 3

Pipeline 4

Plane 5

Other (specify) _____ 6

[ ] Mark (X) this box if you attach a continuation sheet.

3.03 a. Circle all applicable containers used to transport the listed substance to your facility.
CBI

[__]

Bags 1

Boxes 2

Free standing tank cylinders 3

Tank rail cars ..... (4)

Hopper cars 5

Tank trucks 6

Hopper trucks 7

Drums 8

Pipeline 9

Other (specify) _____ 10

b. If the listed substance is transported in pressurized tank cylinders, tank rail cars, or tank trucks, state the pressure of the tanks.

Tank cylinders ..... Not Applicable mmHg

Tank rail cars ..... Not Applicable mmHg

Tank trucks ..... Not Applicable mmHg

[__] Mark (X) this box if you attach a continuation sheet.

PART B RAW MATERIAL IN THE FORM OF A MIXTURE

3.04 If you obtain the listed substance in the form of a mixture, list the trade name(s) of the mixture, the name of its supplier(s) or manufacturer(s), an estimate of the average percent composition by weight of the listed substance in the mixture, and the amount of mixture processed during the reporting year.

CBI

[__]

Trade Name	Supplier or Manufacturer	Average % Composition by Weight (specify ± % precision)	Amount Processed (kg/yr)
Not Applicable	Not Applicable	Not Applicable	Not Applicable

[__] Mark (X) this box if you attach a continuation sheet.

PART C RAW MATERIAL VOLUME

3.05 CBI [ ] State the quantity of the listed substance used as a raw material during the reporting year in the form of a class I chemical, class II chemical, or polymer, and the percent composition, by weight, of the listed substance.

	Quantity Used (kg/yr)	% Composition by Weight of Listed Substance in Raw Material (specify ± % precision)
Class I chemical	1,381,000	100
Class II chemical		
Polymer		

[ ] Mark (X) this box if you attach a continuation sheet.

SECTION 4 PHYSICAL/CHEMICAL PROPERTIES

General Instructions:

If you are reporting on a mixture as defined in the glossary, reply to questions in Section 4 that are inappropriate to mixtures by stating "NA -- mixture."

For questions 4.06-4.15, if you possess any hazard warning statement, label, MSDS, or other notice that addresses the information requested, you may submit a copy or reasonable facsimile in lieu of answering those questions which it addresses.

PART A PHYSICAL/CHEMICAL DATA SUMMARY

4.01 Specify the percent purity for the three major[1] technical grade(s) of the listed substance as it is manufactured, imported, or processed. Measure the purity of the substance in the final product form for manufacturing activities, at the time you import the substance, or at the point you begin to process the substance.

CBI

[ ]

	Manufacture	Import	Process
Technical grade #1	_____ % purity	_____ % purity	99.5 % purity
Technical grade #2	_____ % purity	_____ % purity	_____ % purity
Technical grade #3	_____ % purity	_____ % purity	_____ % purity

[1]Major = Greatest quantity of listed substance manufactured, imported or processed.

4.02 Submit your most recently updated Material Safety Data Sheet (MSDS) for the listed substance, and for every formulation containing the listed substance. If you possess an MSDS that you developed and an MSDS developed by a different source, submit your version. Indicate whether at least one MSDS has been submitted by circling the appropriate response.

Yes ..... (1)

No 2

Indicate whether the MSDS was developed by your company or by a different source.

Your company 1

Another source ..... (2)

[X] Mark (X) this box if you attach a continuation sheet.

M A T E R I A L S A F E T Y D A T A S H E E T

Dow Chemical U.S.A.* Midland, MI 48674 Emergency Phone: 517-636-4400

Product Code: 92098 Page: 1

PRODUCT NAME: VORANATE (R) T-80 TYPE II TOLUENE DIISOCYANATE

Effective Date: 12/13/88 Date Printed: 05/03/89 MSD: 000609

1. INGREDIENTS: (% w/w, unless otherwise noted)

Toluene-2,4-diisocyanate (TDI)	CAS# 000584-84-9	80%
Toluene-2,6-diisocyanate	CAS# 000091-08-7	20%

This document is prepared pursuant to the OSHA Hazard Communication Standard (29 CFR 1910.1200). In addition, other substances not 'Hazardous' per this OSHA Standard may be listed. Where proprietary ingredient shows, the identity may be made available as provided in this standard.

2. PHYSICAL DATA:

BOILING POINT: 250C (482F)
VAP PRESS: 0.01 mmHg @ 20C
VAP DENSITY: 6.0
SOL. IN WATER: Insoluble
SP. GRAVITY: 1.22 @ 25/15.5C
APPEARANCE: Water white to pale yellow liquid.
ODOR: Sharp pungent odor.

3. FIRE AND EXPLOSION HAZARD DATA:

FLASH POINT: 127C (260F)
METHOD USED: PMCC, ASTM D-93

FLAMMABLE LIMITS
LFL: Not determined
UFL: Not determined

EXTINGUISHING MEDIA: Carbon dioxide, dry chemical, or foam. If water is used, it should be in very large quantity. The reaction between water and hot isocyanate may be vigorous.

FIRE & EXPLOSION HAZARDS: Down-wind personnel must be evacuated. Do not reseal contaminated containers since pressure build-up may cause rupture. Fire point: 146C (295F).

FIRE-FIGHTING EQUIPMENT: People who are fighting isocyanate fires must be protected against nitrogen oxide fumes and isocyanate vapors by wearing positive pressure self-contained breathing

(Continued on Page 2)
(R) Indicates a Trademark of The Dow Chemical Company

* An Operating Unit Of The Dow Chemical Company

3. FIRE AND EXPLOSION HAZARD DATA: (CONTINUED)

apparatus and full protective clothing.

4. REACTIVITY DATA:

STABILITY: (CONDITIONS TO AVOID). Stable when stored under recommended storage conditions. Store in a dry place at temperatures between 18-41C (65-105F).

INCOMPATIBILITY: (SPECIFIC MATERIALS TO AVOID) Water, acid, base, alcohols, metal compounds, surface active materials. Avoid water as it reacts to form heat, CO2 and insoluble urea. The combined effect of the CO2 and heat can produce enough pressure to rupture a closed container.

HAZARDOUS DECOMPOSITION PRODUCTS: Isocyanate vapor and mist, carbon dioxide, carbon monoxide, nitrogen oxides and traces of hydrogen cyanide.

HAZARDOUS POLYMERIZATION: May occur with incompatible reactants, especially strong bases, water or temperatures over 41C (105F).

5. ENVIRONMENTAL AND DISPOSAL INFORMATION:

ACTION TO TAKE FOR SPILLS/LEAKS:

Evacuate and ventilate spill area, dike spill to prevent entry into water system, wear full protective equipment including respiratory equipment during clean up.

Major spill: Call Dow Chemical U.S.A. (409) 238-2112. If transportation spill involved call CHEMTREC (800) 424-9300. If temporary control of isocyanate vapor is required a blanket of protein foam (available at most fire departments) may be placed over the spill. Large quantities may be pumped into closed but not sealed containers for disposal.

Minor spill: Absorb the isocyanate with sawdust or other absorbent and shovel into open top containers. Do not make pressure tight. Transport to a well-ventilated area (outside) and treat with neutralizing solution consisting of a mixture of

(Continued on Page 3)

(R) Indicates a Trademark of The Dow Chemical Company

* An Operating Unit Of The Dow Chemical Company

5. ENVIRONMENTAL AND DISPOSAL INFORMATION: (CONTINUED)

water and 3-8% concentrated ammonium hydroxide or 5-10% sodium carbonate. Add about 10 parts of neutralizer per part of isocyanate with mixing. Allow to stand for 48 hours letting evolved carbon dioxide to escape.

Clean-up: Decontaminate floor using water/ammonia solution with 1-2% added detergent letting stand over affected area for at least 10 minutes. Cover mops and brooms used for this with plastic and dispose properly (often by incineration).

DISPOSAL METHOD: Follow all federal, state and local regulations. Liquids are usually incinerated in a proper facility. Solids are usually also incinerated or landfilled. Empty drums should be filled with water. Let drum stand unsealed for 48 hours. Before disposal drums should be drained, triple rinsed, and holed to prevent reuse. Dispose of drain and rinse fluid according to federal, state and local laws and regulations. The most commonly accepted method is in an approved wastewater treatment facility. Drums should be disposed of in accordance with federal, state and local laws and regulations. Commonly accepted methods for disposal of plastic drums are disposal in an approved landfill after shredding or incineration in an approved industrial incinerator or other appropriate incinerator facility. Steel drums are commonly disposed in an approved landfill after crushing or in accordance with other approved procedures.

6. HEALTH HAZARD DATA:

EYE: May cause pain, severe eye irritation and moderate corneal injury. Vapors may irritate eyes.

SKIN CONTACT: Prolonged or repeated exposure may cause severe irritation, even a burn. Skin contact may result in allergic reaction even though it is not expected to result in absorption of amounts sufficient to cause other adverse effects.

SKIN ABSORPTION: The LD50 for skin absorption in rabbits is >9400 mg/kg.

(Continued on Page 4)

(R) Indicates a Trademark of The Dow Chemical Company

* An Operating Unit Of The Dow Chemical Company

6. HEALTH HAZARD DATA: (CONTINUED)

INGESTION: Single dose oral toxicity is low. The oral LD50 for rats is 5800 mg/kg. Ingestion may cause gastrointestinal irritation or ulceration.

INHALATION: Excessive vapor concentrations are attainable and could be hazardous on single exposure. Single and repeated excessive exposure may cause severe irritation to upper respiratory tract and lungs (choking sensation, chest tightness), respiratory sensitization, decreased ventilatory capacity, liver effects, cholinesterase depression, gastro-intestinal distress and/or neurologic disorders. The 4-hour LC50 for TDI for rats is 13.9 ppm.

SYSTEMIC & OTHER EFFECTS: Based on available data, repeated exposures are not anticipated to cause any additional significant adverse effects. For hazard communication purposes under OSHA standard 29 CFR Part 1910.1200, this chemical is listed as a potential carcinogen by Nat'l. Tox. Program and IARC. An oral study in which high doses of TDI were reported to cause cancer in animals has been found to contain numerous deficiencies which compromise the validity of the study. TDI did not cause cancer in laboratory animals exposed by inhalation, the most likely route of exposure. Birth defects are unlikely. Exposures having no effect on the mother should have no effect on the fetus. Did not cause birth defects in animals; other effects were seen in the fetus only at doses which caused toxic effects to the mother. Results of in vitro ("test tube") mutagenicity tests have been inconclusive.

7. FIRST AID:

EYES: Irrigate with flowing water immediately and continuously for 15 minutes. Consult medical personnel.

SKIN: In case of contact, immediately flush skin with plenty of water for at least 15 minutes while removing contaminated clothing and shoes. Call a physician if irritation persists. Wash clothing before reuse. Destroy contaminated shoes.

INGESTION: Do not induce vomiting. Call a physician and/or

(Continued on Page 5)

(R) Indicates a Trademark of The Dow Chemical Company

* An Operating Unit Of The Dow Chemical Company

7. FIRST AID: (CONTINUED)

transport to emergency facility immediately.

INHALATION: Remove to fresh air. If not breathing, give mouth-to-mouth resuscitation. If breathing is difficult, give oxygen. Call a physician.

NOTE TO PHYSICIAN: May cause tissue destruction leading to stricture. If lavage is performed, suggest endotracheal and/or esophagoscopic control. If burn is present, treat as any thermal burn, after decontamination. No specific antidote. Supportive care. Treatment based on judgment of the physician in response to reactions of the patient. The manifestations of the respiratory symptoms, including pulmonary edema, resulting from acute exposure may be delayed. May cause respiratory sensitization. Cholinesterase inhibition has been noted in human exposure but is not of benefit in determining exposure and is not correlated with signs of exposure.

8. HANDLING PRECAUTIONS:

EXPOSURE GUIDELINE(S): OSHA PEL is 0.02 ppm as a ceiling limit for toluene 2,4-diisocyanate. ACGIH TLV is 0.005 ppm; 0.02 ppm STEL for toluene 2,4-diisocyanate. Dow Industrial Hygiene Guide is 0.02 ppm as a ceiling limit for toluene diisocyanate.

VENTILATION: Provide general and/or local exhaust ventilation to control airborne levels below the exposure guidelines.

RESPIRATORY PROTECTION: Atmospheric levels should be maintained below the exposure guideline. When respiratory protection is required for certain operations, use an approved supplied-air respirator. For emergency and other conditions where the exposure guideline may be greatly exceeded, use an approved positive-pressure self-contained breathing apparatus.

SKIN PROTECTION: Use protective clothing impervious to this material. Selection of specific items such as gloves, boots, apron, or full-body suit will depend on operation. Remove contaminated clothing immediately, wash skin area with soap and water, and launder clothing before reuse. Safety shower should

(Continued on Page 6)

(R) Indicates a Trademark of The Dow Chemical Company

8. HANDLING PRECAUTIONS: (CONTINUED)

be located in immediate work area.

EYE PROTECTION: Use chemical goggles. If vapor exposure causes eye irritation, use a full-face, supplied-air respirator. Eye wash fountain should be located in immediate work area.

9. ADDITIONAL INFORMATION:

REGULATORY REQUIREMENTS:

SARA HAZARD CATEGORY: This product has been reviewed according to the EPA 'Hazard Categories' promulgated under Sections 311 and 312 of the Superfund Amendment and Reauthorization Act of 1986 (SARA Title III) and is considered, under applicable definitions, to meet the following categories:

An immediate health hazard
A delayed health hazard
A reactive hazard

SPECIAL PRECAUTIONS TO BE TAKEN IN HANDLING AND STORAGE: Warning properties of this material (irritation of eyes, nose and throat) not adequate to prevent chronic overexposure from inhalation. This material can produce asthmatic sensitization upon either single inhalation exposure to a relatively high concentration or upon repeated inhalation exposure to lower concentrations. Exposures to vapors of heated TDI can be extremely dangerous. (Have TDI neutralizer available for spills.)

MSDS STATUS: Revised Section 9

SARA 313 INFORMATION:
This product contains the following substances subject to the reporting requirements of section 313 of Title III of the Superfund Amendments and Reauthorization Act of 1986 and 40 CFR Part 372:

(Continued on Page 7)
(R) Indicates a Trademark of The Dow Chemical Company

* An Operating Unit Of The Dow Chemical Company

9. ADDITIONAL INFORMATION: (CONTINUED)

CHEMICAL NAME	CAS NUMBER	CONCENTRATION	
TOLUENE-2,6-DIISOCYANATE	000091-08-7	20	%
TOLUENE-2,4-DIISOCYANATE	000584-84-9	80	%

(R) Indicates a Trademark of The Dow Chemical Company
The Information Herein Is Given In Good Faith, But No Warranty, Express Or Implied, Is Made. Consult The Dow Chemical Company For Further Information.

* An Operating Unit Of The Dow Chemical Company

4.03 Submit a copy or reasonable facsimile of any hazard information (other than an MSDS) that is provided to your customers/users regarding the listed substance or any formulation containing the listed substance. Indicate whether this information has been submitted by circling the appropriate response.

Yes 1

No 2

4.04 For each activity that uses the listed substance, circle all the applicable number(s) corresponding to each physical state of the listed substance during the activity listed. Physical states for importing and processing activities are determined at the time you import or begin to process the listed substance. Physical states for manufacturing, storage, disposal and transport activities are determined using the final state of the product.

CBI

[ ]

Activity	Physical State				
	Solid	Slurry	Liquid	Liquified Gas	Gas
Manufacture	1	2	3	4	5
Import	1	2	3	4	5
Process	1	2	3	4	5
Store	1	2	3	4	5
Dispose	1	2	3	4	5
Transport	1	2	3	4	5

[ ] Mark (X) this box if you attach a continuation sheet.

4.05 Particle Size -- If the listed substance exists in particulate form during any of the following activities, indicate for each applicable physical state the size and the percentage distribution of the listed substance by activity. Do not include particles ≥10 microns in diameter. Measure the physical state and particle sizes for importing and processing activities at the time you import or begin to process the listed substance. Measure the physical state and particle sizes for manufacturing storage, disposal and transport activities using the final state of the product.

CBI
[__]

Physical State		Manufacture	Import	Process	Store	Dispose	Transport
Dust	<1 micron			N/A	N/A		
	1 to <5 microns			N/A	N/A		
	5 to <10 microns			N/A	N/A		
Powder	<1 micron			N/A	N/A		
	1 to <5 microns			N/A	N/A		
	5 to <10 microns			N/A	N/A		
Fiber	<1 micron			N/A	N/A		
	1 to <5 microns			N/A	N/A		
	5 to <10 microns			N/A	N/A		
Aerosol	<1 micron			N/A	N/A		
	1 to <5 microns			N/A	N/A		
	5 to <10 microns			N/A	N/A		

[__] Mark (X) this box if you attach a continuation sheet.

SECTION 5 ENVIRONMENTAL FATE

PART A RATE CONSTANTS AND TRANSFORMATION PRODUCTS

5.01 Indicate the rate constants for the following transformation processes.

a. Photolysis:

Absorption spectrum coefficient (peak) .... 871 (1/M cm) at 284 nm

Reaction quantum yield, ϕ ..... NO INFORMATION at _____ nm

Direct photolysis rate constant, k_p, at ... $<1.2 \times 10^{-3}$ 1/hr WHEN NO_2 latitude PHOTOLYSIS RATE IS 0.37/HR(2)

b. Oxidation constants at 25°C:

For $^1O_2$ (singlet oxygen), k_{ox} ..... NO INFORMATION 1/M hr

For RO_2 (peroxy radical), k_{ox} ..... NO INFORMATION 1/M hr

c. Five-day biochemical oxygen demand, BOD_5 ... NOT APPLICABLE DUE TO REACTION WITH WATER mg/l

d. Biotransformation rate constant:

For bacterial transformation in water, k_b... NO OXYGEN CONSUMED 1/hr

Specify culture ..... IN MODIFIED MITI TEAT(3)

e. Hydrolysis rate constants:

For base-promoted process, k_B ..... NO INFORMATION 1/M hr

For acid-promoted process, k_A ..... NO INFORMATION 1/M hr

For neutral process, k_N ..... NO INFORMATION 1/hr

f. Chemical reduction rate (specify conditions) NOT EXPECTED

g. Other (such as spontaneous degradation) ... POLYUREE FORMATION UNDER HYDROLYTIC CONDITIONS. (4)

[ ] Mark (X) this box if you attach a continuation sheet.

PART B PARTITION COEFFICIENTS

5.02 a. Specify the half-life of the listed substance in the following media.

Media	Half-life (specify units)
Groundwater	<< 1 DAY IN WATER SOLUTION (4)
Atmosphere	26 HR (2)
Surface water	<< 1 DAY IN WATER SOLUTION (4)
Soil	< 1 DAY (4)

b. Identify the listed substance's known transformation products that have a half-life greater than 24 hours.

CAS No.	Name	Half-life (specify units)		Media
NOT FOUND	POLYUREA	> 1 YR	in	WATER AND SOIL (4)
95-80-7	2,4-TOLUENE DIAMINE	< 1 DAY	in	BIOLOGICAL WASTER WATER TREATMENT PLANT (4)
823-40-5	2,6-TOLUENE DIAMINE	< 1 DAY	XX	
5206-52-0	UREA, N,N'-BIS(3-ISOCYANATO-4- METHYLPHENE)	UNKNOWN HALF-LIFE	in	(5,6)

5.03 Specify the octanol-water partition coefficient, K_{ow} ... REACTS WITH BOTH at 25°C

Method of calculation or determination ..... OCTANOL AND WATER

5.04 Specify the soil-water partition coefficient, K_d ..... REACTS WITH at 25°C

Soil type ..... WATER

5.05 Specify the organic carbon-water partition coefficient, K_{oc} ..... REACTS WITH WATER at 25°C

5.06 Specify the Henry's Law Constant, H ..... REACTS WITH WATER atm-m^3/mole

[ ] Mark (X) this box if you attach a continuation sheet.

5.07 List the bioconcentration factor (BCF) of the listed substance, the species for which it was determined, and the type of test used in deriving the BCF.

Bioconcentration Factor	Species	Test[1]
NONE DETECTED	MOINA MACROCOPA STRAUS	NOT DEFINED (4)
NONE DETECTED	CYPRINUS CARPIO	NOT DEFINED (4)

[1]Use the following codes to designate the type of test:

F = Flowthrough
S = Static

(1) Phillips and Nachod, eds., Organic Electronic Spectral Data, Vol Iv, pg. 200.

(2) K.H. becker, V. Bastian and Th. Klein, The reactions of toluenediisocyanate, toluenediamine and methylenedianiline under simulated atmospheric conditions, J. Photochem, and Photobiol., A: Chemistry, 45 (1988) 195-205.

(3) N. Caspers, B. Hamburger, R. Kanne and Waklebert, Ecotoxicity of TDI, MDI, TDA and MDA, Report to the International Isocyanate Institue, E-CE-41, 1986. Quoted in D.S. Gilbert, Fate of TDI and MDI in Air, Soil and Water, Polyurethanes World Congress 1987, Proceedings of the SPI/FSK.

(4) F.K. Brochhagen and B.M. Grieveson, Environmental aspects of isocyanates in water and soil, Cellular Polymers, 3 (1984) 11-17.

(5) K. Marcali, Microdetermination of toluenediisocyanate in atmosphere, Anal. Chem. 29 (1957) 552-558.

(6) G.A. Campbell, T.J. Dearlove and W.C. Meluch, Di(isocyanatotolyl)urea, U.S. Patent 3,906,019 (1975), Chem. Abs. 84:5645h.

[ ] Mark (X) this box if you attach a continuation sheet.

6.04 For each market listed below, state the quantity sold and the total sales value of
CBI the listed substance sold or transferred in bulk during the reporting year.

[__]

Market	Quantity Sold or Transferred (kg/yr)	Total Sales Value ($/yr)
Retail sales	NOT REQUIRED FOR LISTED SUBSTANCE	
Distribution -- Wholesalers		
Distribution -- Retailers		
Intra-company transfer		
Repackagers		
Mixture producers		
Article producers		
Other chemical manufacturers or processors		
Exporters		
Other (specify)		

6.05 Substitutes -- List all known commercially feasible substitutes that you know exist for the listed substance and state the cost of each substitute. A commercially feasible substitute is one which is economically and technologically feasible to use
CBI in your current operation, and which results in a final product with comparable performance in its end uses.

[__]

Substitute	Cost ($/kg)
UK	UK

[__] Mark (X) this box if you attach a continuation sheet.

CONYERS

7.01 PROCESSOR
Process Type: Flexible Slabstock Polyurethane Foam Manufacturing Process
Intermediates: None

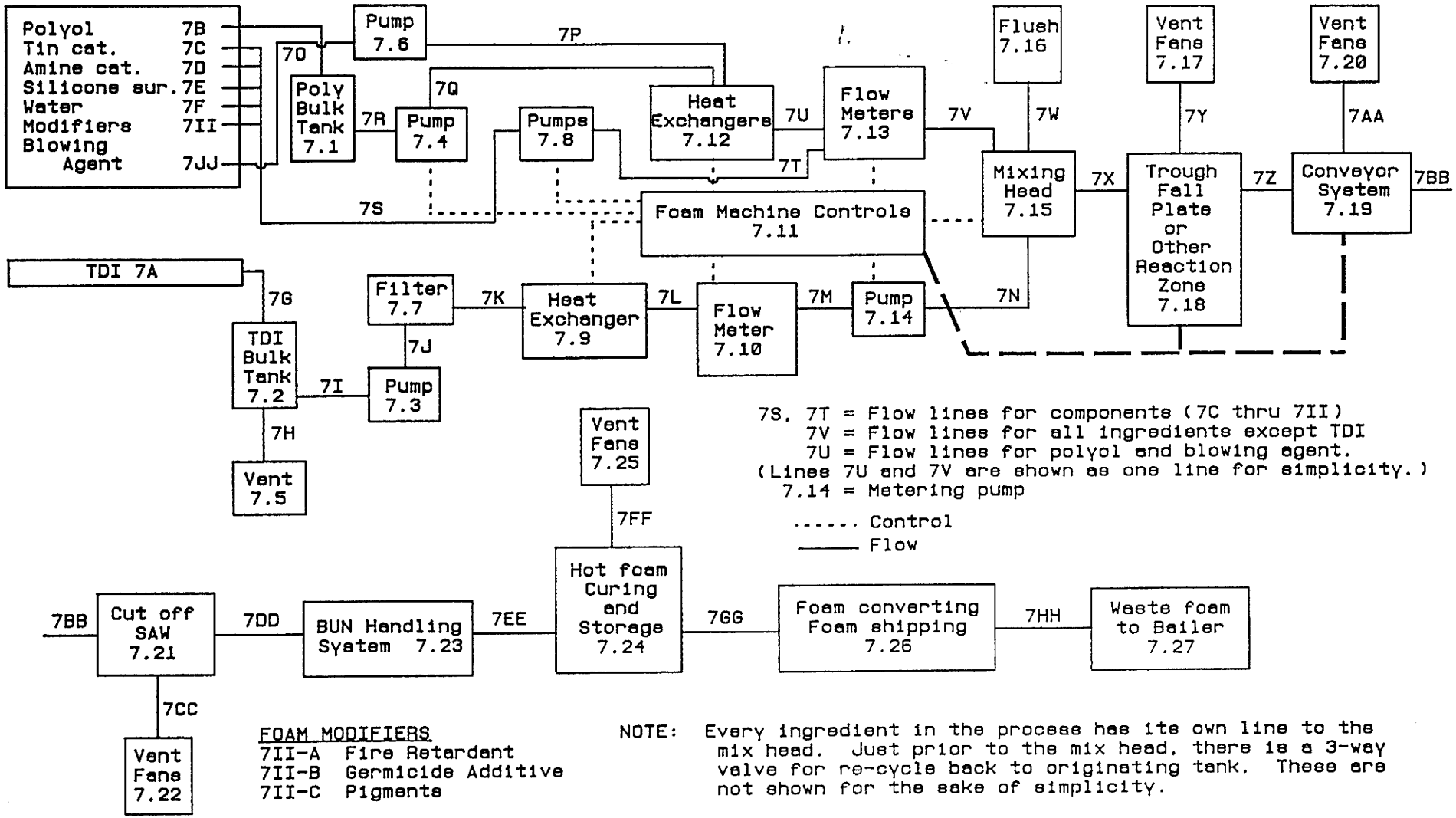

FOAM MODIFIERS
7II-A Fire Retardant
7II-B Germicide Additive
7II-C Pigments

NOTE: Every ingredient in the process has its own line to the mix head. Just prior to the mix head, there is a 3-way valve for re-cycle back to originating tank. These are not shown for the sake of simplicity.

CONYERS

7.03 EMISSIONS

Process Type: Flexible Slabstock Polyurethane Foam Manufacturing Process

Intermediates: None

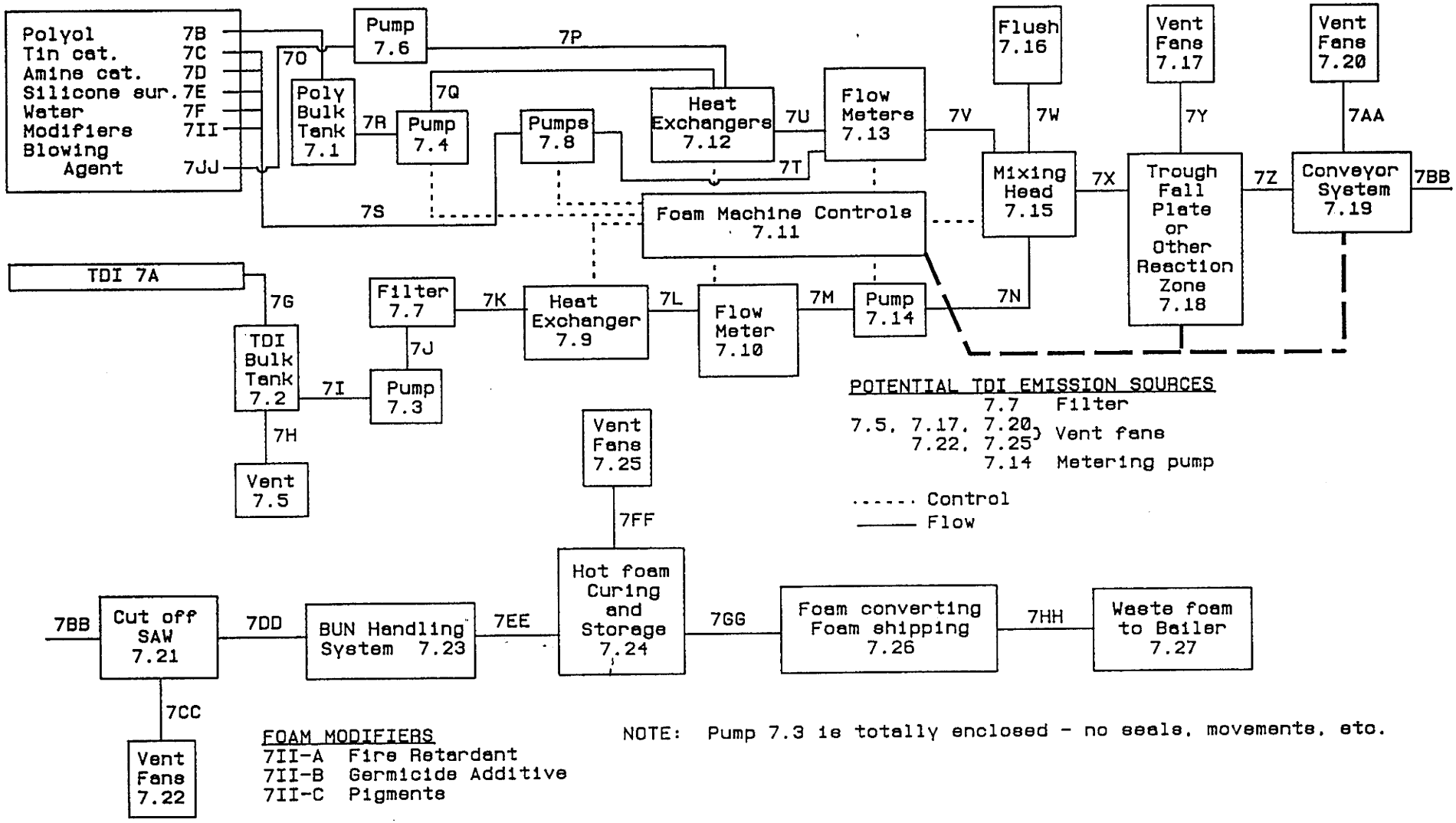

FOAM MODIFIERS

7II-A Fire Retardant

7II-B Germicide Additive

7II-C Pigments

NOTE: Pump 7.3 is totally enclosed - no seals, movements, etc.

7.04 Describe the typical equipment types for each unit operation identified in your process block flow diagram(s). If a process block flow diagram is provided for more than one process type, photocopy this question and complete it separately for each process type.

CBI

[ ] Process type ..... FLEXIBLE SLABSTOCK POLYURETHANE FOAM MANUFACTURING

Unit Operation ID Number	Typical Equipment Type	Operating Temperature Range (°C)	Operating Pressure Range (mm Hg)	Vessel Composition
7.1	POLYOL BULK TANK	10-40	760	STEEL/GLASS
7.2	TDI BULK TANK	20-40	760	STEEL/GLASS
7.3	CENTRIFUGAL PUMP	20-40	<6000	STEEL
7.4	GEAR PUMP	10-40	<6000	STEEL
7.5	VENT	20-40	760	STEEL
7.6	CENTRIFUGAL PUMP	5-30	<8500	STEEL
7.7	BAG FILTER	20-40	<6000	STEEL
7.8	GEAR PUMP	10-40	<20000	STEEL
7.9	TUBE HEAT EXCHANGER	20-40	<6000	STEEL
7.10	FLOW METER	20-40	<6000	GLASS
7.11	FOAM MACHINE CONTROLS	NA	NA	NA
7.12	HEAT EXCHANGER	10-40	<6000	STEEL
7.13	FLOW METER	10-40	<6000	STEEL
7.14	PISTON PUMP	20-40	<20000	STEEL
7.15	MIXING HEAD	20-30	<2500	STEEL
7.16	FLUSH DRUM	10-40	760	STEEL
7.17	VENT FANS	NA	NA	STEEL
7.18	FALL PLATE	<100	760	STEEL
7.19	CONVEYOR SYSTEM	NA	NA	STEEL
7.20	VENT FANS	NA	NA	STEEL
7.21	CUT-OFF SAW	NA	NA	STEEL
7.22	VENT FANS	NA	NA	STEEL

[X] Mark (X) this box if you attach a continuation sheet.

7.04 Describe the typical equipment types for each unit operation identified in your process block flow diagram(s). If a process block flow diagram is provided for more than one process type, photocopy this question and complete it separately for each process type.

CBI

[ ] Process type ..... FLEXIBLE SLABSTOCK POLYURETHANE FOAM MANUFACTURING (CONT.)

Unit Operation ID Number	Typical Equipment Type	Operating Temperature Range (°C)	Operating Pressure Range (mm Hg)	Vessel Composition
7.23	OVERHEAD CRANE	NA	NA	STEEL
7.24	HOT FOAM CURING AREA	NA	NA	NA
7.25	VENT FANS	NA	NA	STEEL
7.26	BAND SAW	NA	NA	STEEL
7.27	BALER	NA	NA	STEEL

[ ] Mark (X) this box if you attach a continuation sheet.

7.05 Describe each process stream identified in your process block flow diagram(s). If a process block flow diagram is provided for more than one process type, photocopy this question and complete it separately for each process type.

CBI

[ ] Process type ..... FLEXIBLE SLABSTOCK POLYURETHANE FOAM MANUFACTURING

Process Stream ID Code	Process Stream Description	Physical State[1]	Stream Flow (kg/yr)
7G, I, J, K, L,M,N	TDI	OL	1,381,000
7R, Q, U	POLYOL	OL	3,283,000
7O, P, U	BLOWING AGENT	OL	131,000
7S, T	TIN, CAT, AMINE CAT, SILICONE, SURF., MODIFIERS	OL	91,000
7S, T	WATER	AL	102,000
7V	POLYOL, TIN CAT, AMINE CAT, SILICONE SURF, WATER, MODIFERS BLOWING AGENT	OL	3,607,000

[1]Use the following codes to designate the physical state for each process stream:

GC = Gas (condensible at ambient temperature and pressure)
GU = Gas (uncondensible at ambient temperature and pressure)
SO = Solid
SY = Sludge or slurry
AL = Aqueous liquid
OL = Organic liquid
IL = Immiscible liquid (specify phases, e.g., 90% water, 10% toluene)

7W	FLUSH	OL	11,000
7X,Z,BB, DD,EE,GG	POLYURETHANE FOAM	SO	4,608,000
7HH	POLYURETHANE FOAM	SO	897,000

[ ] Mark (X) this box if you attach a continuation sheet.

7.06 Characterize each process stream identified in your process block flow diagram(s). If a process block flow diagram is provided for more than one process type, photocopy this question and complete it separately for each process type. (Refer to the instructions for further explanation and an example.)

CBI

[ ] Process type ..... FLEXIBLE SLABSTOCK POLYURETHANE FOAM MANUFACTURING (CONT.)

a. Process Stream ID Code	b. Known Compounds[1]	c. Concentrations[2,3] (% or ppm)	d. Other Expected Compounds	e. Estimated Concentrations (% or ppm)
7G,I,J, K,L,M,N	TDI	99.9%(A)(W)	HYDROLYZABLE CHLORIDE	0.1%
7R,Q,U	POLYOL	100%(E)(W)	NA	NA
7O,P,U	METHYLENE CHLORIDE	100%(E)(W)	NA	NA

7.06 continued below

7S,T	TIN CAT, AMINE CAT, SILICONE SURF., MODIFIERS, WATER	100%(E)(W)	NA	NA
7V	POLYOL, TIN CAT, AMINE CAT, SILICONE SURF, MODIFIERS, WATER	100%(E)(W)	NA	NA

[X] Mark (X) this box if you attach a continuation sheet.

7.06 Characterize each process stream identified in your process block flow diagram(s). If a process block flow diagram is provided for more than one process type, photocopy this question and complete it separately for each process type. (Refer to the instructions for further explanation and an example.)

CBI

[ ] Process type ..... FLEXIBLE SLABSTOCK POLYURTHANE MANUFACTURING (CONT.)

a. Process Stream ID Code	b. Known Compounds[1]	c. Concentrations[2,3] (% or ppm)	d. Other Expected Compounds	e. Estimated Concentrations (% or ppm)
7W	METHYLENE CHLORIDE	45%(E)(W)	NA	NA
	POLYURETHANE FOAM	2% (E)(W)		
	POLYOL	50% (E)(W)		
	TIN CAT, AMINE CAT,	3% (E)(W)		
	SILICONE SURF, MODIFIERS			
	WATER			
7X,Z,BB, DD,EE,GG, HH	POLYUREHTANE FOAM	100%(E)(W)	NA	NA

7.06 continued below

[ ] Mark (X) this box if you attach a continuation sheet.

7.06 (continued)

[1]For each additive package introduced into a process stream, specify the compounds that are present in each additive package, and the concentration of each component. Assign an additive package number to each additive package and list this number in column b. (Refer to the instructions for further explanation and an example. Refer to the glossary for the definition of additive package.)

Additive Package Number	Components of Additive Package	Concentrations (% or ppm)
1	Not Applicable	Not Applicable
2		
3		
4		
5		

[2]Use the following codes to designate how the concentration was determined:

A = Analytical result
E = Engineering judgement/calculation

[3]Use the following codes to designate how the concentration was measured:

V = Volume
W = Weight

[ ] Mark (X) this box if you attach a continuation sheet.

PART A RESIDUAL TREATMENT PROCESS DESCRIPTION

8.01 In accordance with the instructions, provide a residual treatment block flow diagram which describes the treatment process used for residuals identified in question 7.01.

CBI

[ ] Process type ..... FLEXIBLE SLABSTOCK POLYURETHANE FOAM MANUFACTURING

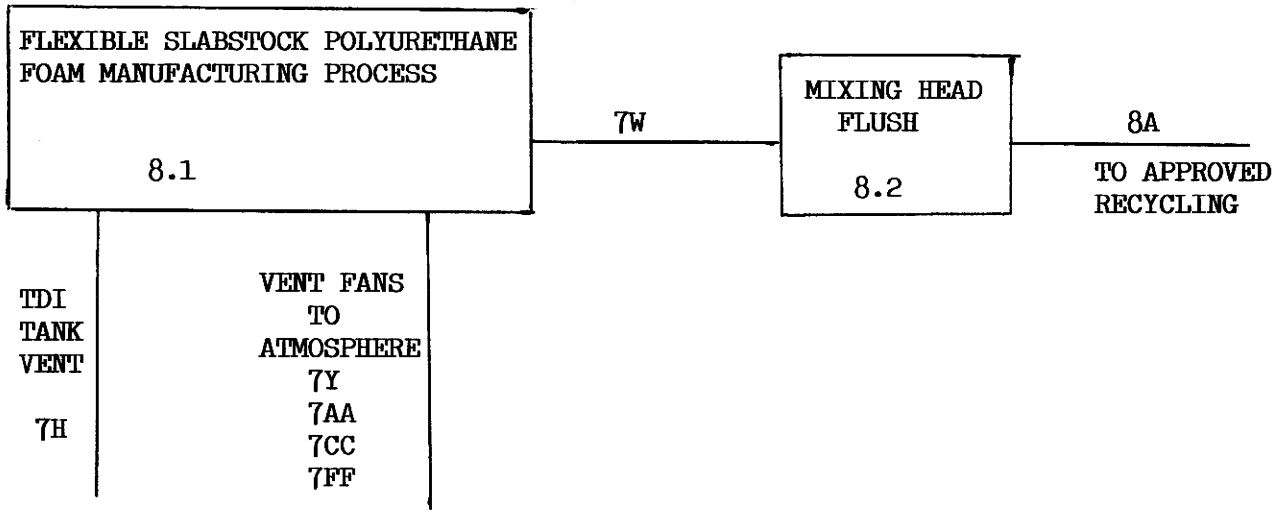

[ ] Mark (X) this box if you attach a continuation sheet.

PART B RESIDUAL GENERATION AND CHARACTERIZATION

8.05 Characterize each process stream identified in your residual treatment block flow diagram(s). If a residual treatment block flow diagram is provided for more than one process type, photocopy this question and complete it separately for each process type. (Refer to the instructions for further explanation and an example.)

CBI

[ ] Process type ..... FLEXIBLE SLABSTOCK POLYURETHANE FOAM MANUFACTURING

a. Stream ID Code	b. Type of Hazardous Waste[1]	c. Physical State of Residual[2]	d. Known Compounds[3]	e. Concentrations (% or ppm)[4,5,6]	f. Other Expected Compounds	g. Estimated Concentrations (% or ppm)
8A	T	OL	METHYLENE CHLORIDE	45%(E)(W)	NA	NA
	FLASHPOINT:	NA	POLYURETHANE FOAM	2%(E)(W)		
	VISOCSITY:	<10CPS	POLYOL	50%(E)(W)		
			WATER, TIN CAT	3%(E)(W)		
			AMINE CAT, SILICONE SURF MODIFIERS			
7H	R, T	GU	TDI	30PPM(E)(W)	NA	NA
7Y,AA	R, T	GU	TDI	0.10PPM(E)(W)	NA	NA
			BLOWING AGENT	100PPM(E)(W)		
			CO_2	300PPM(E)(W)		

8.05 continued below

[ ] Mark (X) this box if you attach a continuation sheet.

8.06 Characterize each process stream identified in your residual treatment block flow diagram(s). If a residual treatment block flow diagram is provided for more than one process type, photocopy this question and complete it separately for each process type. (Refer to the instructions for further explanation and an example.)

CBI

[ ] Process type ..... FLEXIBLE SLABSTOCK POLYURETHANE FOAM MANUFACTURING

a. Stream ID Code	b. Waste Description Code[1]	c. Management Method Code[2]	d. Residual Quantities (kg/yr)	e. Management of Residual (%) On-Site	e. Management of Residual (%) Off-Site	f. Costs for Off-Site Management (per kg)	g. Changes in Management Methods
8A	A01	4SR	7200	0	100%	$0.54	NONE
7H	B91	M5a	<1.0	100%	0%	NA	NONE
7Y,AA CC,FF	B91	M5a	380,000	100%	0%	NA	NONE

[1]Use the codes provided in Exhibit 8-1 to designate the waste descriptions

[2]Use the codes provided in Exhibit 8-2 to designate the management methods

[ ] Mark (X) this box if you attach a continuation sheet.

8.22 Describe the combustion chamber design parameters for each of the three largest (by capacity) incinerators that are used on-site to burn the residuals identified in your process block or residual treatment block flow diagram(s).

CBI

[__]

Incinerator	Combustion Chamber Temperature (°C) Primary	Combustion Chamber Temperature (°C) Secondary	Location of Temperature Monitor Primary	Location of Temperature Monitor Secondary	Residence Time In Combustion Chamber (seconds) Primary	Residence Time In Combustion Chamber (seconds) Secondary
1	NOT REQUIRED FOR LISTED SUBSTANCE					
2						
3						

Indicate if Office of Solid Waste survey has been submitted in lieu of response by circling the appropriate response.

Yes 1

No 2

8.23 Complete the following table for the three largest (by capacity) incinerators that are used on-site to burn the residuals identified in your process block or residual treatment block flow diagram(s).

CBI

[__]

Incinerator	Air Pollution Control Device[1]	Types of Emissions Data Available
1	NA	NA
2	NA	NA
3	NA	NA

Indicate if Office of Solid Waste survey has been submitted in lieu of response by circling the appropriate response.

Yes 1

No 2

---

[1]Use the following codes to designate the air pollution control device:

S = Scrubber (include type of scrubber in parenthesis)
E = Electrostatic precipitator
O = Other (specify) _____

[__] Mark (X) this box if you attach a continuation sheet.

PART A EMPLOYMENT AND POTENTIAL EXPOSURE PROFILE

9.01 Mark (X) the appropriate column to indicate whether your company maintains records on the following data elements for hourly and salaried workers. Specify for each data element the year in which you began maintaining records and the number of years the records for that data element are maintained. (Refer to the instructions for further explanation and an example.)

CBI
[__]

Data Element	Data are Maintained for: Hourly Workers	Salaried Workers	Year in Which Data Collection Began	Number of Years Records Are Maintained
Date of hire	X	X	1980	20
Age at hire	X	X	1980	20
Work history of individual before employment at your facility	X	X	1980	20
Sex	X	X	1980	20
Race	X	X	1980	20
Job titles	X	X	1980	20
Start date for each job title	X	X	1980	20
End date for each job title	X	X	1980	20
Work area industrial hygiene monitoring data	NA	NA	NA	NA
Personal employee monitoring data	X	X	1984	20
Employee medical history	X	X	1980	20
Employee smoking history	NA	NA	NA	NA
Accident history	X	X	1980	20
Retirement date	X	X	1980	20
Termination date	X	X	1980	20
Vital status of retirees	NA	NA	NA	NA
Cause of death data	NA	NA	NA	NA

[__] Mark (X) this box if you attach a continuation sheet.

9.02 In accordance with the instructions, complete the following table for each activity in which you engage.

CBI

[ ]

a. Activity	b. Process Category	c. Yearly Quantity (kg)	d. Total Workers	e. Total Worker-Hours
Manufacture of the listed substance	Enclosed			
	Controlled Release			
	Open			
On-site use as reactant	Enclosed			
	Controlled Release	1,381,000	6	11,400
	Open			
On-site use as nonreactant	Enclosed			
	Controlled Release			
	Open			
On-site preparation of products	Enclosed			
	Controlled Release			
	Open			

[ ] Mark (X) this box if you attach a continuation sheet.

9.03 Provide a descriptive job title for each labor category at your facility that encompasses workers who may potentially come in contact with or be exposed to the listed substance.

CBI

[ ]

Labor Category	Descriptive Job Title
A	SUPERINTENDENT
B	SUPERVISOR
C	FOAM LINE TECHNICAN
D	FOAM LINE OPERATOR
E	MACHINE OPERATOR AND ASSISTANT
F	HELPER
G	SHIPPER/RECEIVER
H	
I	
J	

[ ] Mark (X) this box if you attach a continuation sheet.

9.04 **PROCESSOR**

Process Type: Flexible Slabstock Polyurethane Foam Manufacturing Process

Intermediates: None

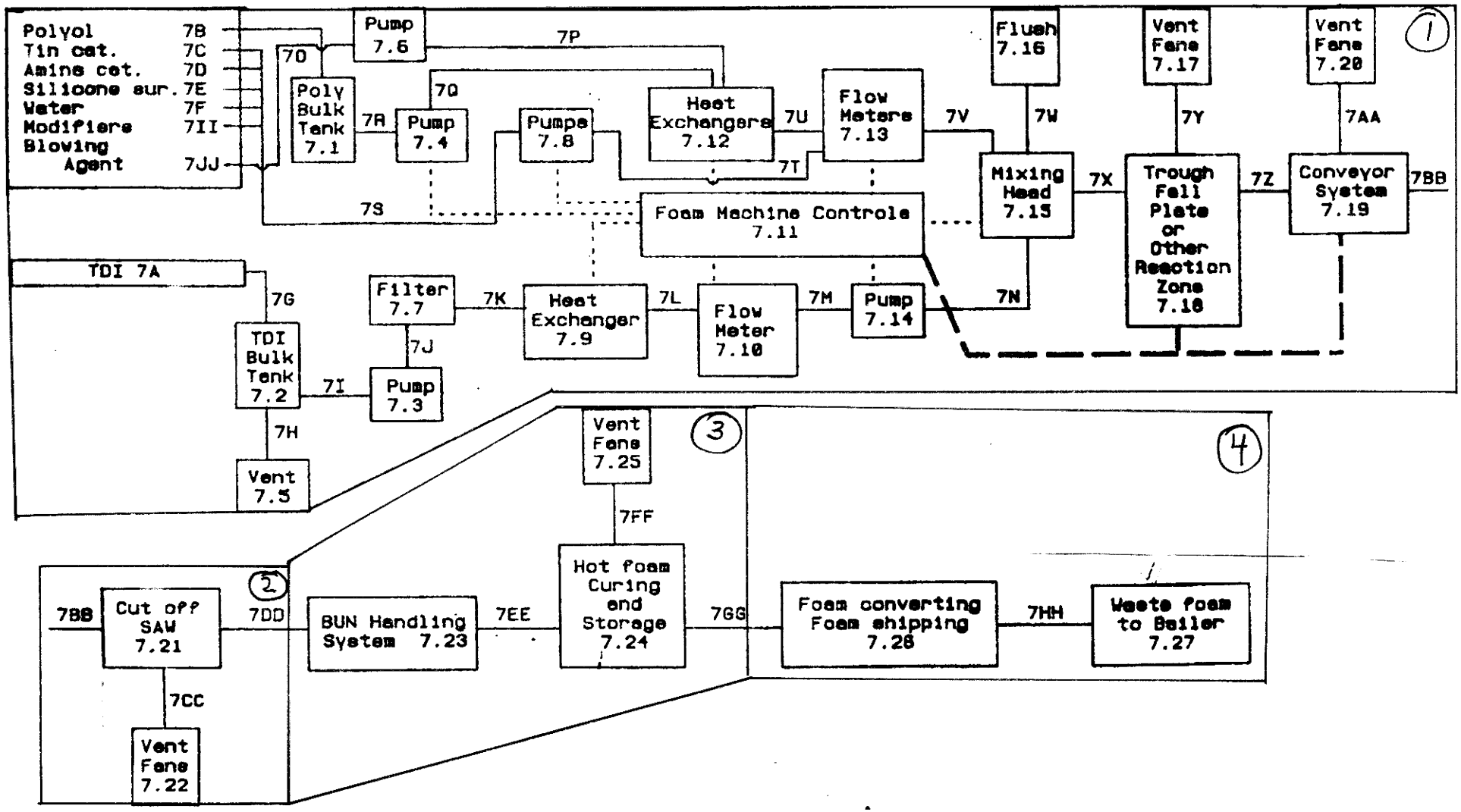

9.05 Describe the various work area(s) shown in question 9.04 that encompass workers who may potentially come in contact with or be exposed to the listed substance. Add any additional areas not shown in the process block flow diagram in question 7.01 or 7.02. Photocopy this question and complete it separately for each process type.

CBI

[ ] Process type ..... FLEXIBLE SLABSTOCK POLYURETHANE FOAM MANUFACTURING

Work Area ID	Description of Work Areas and Worker Activities
1	PUMPING SYSTEMS AND FOAM MACHINE CONTROLS(CREW OPERATORS CONTROLS)
2	CUT-OFF SAW (OPERATOR RUNS SAW)
3	BUN HANDLING SYSTEM (OPERATOR USES OVERHEAD CRANE TO STACK FRESH FOAM BUNS)
4	FOAM COVERTING, SHIPPING, AND BALING (CREW CUTS FOAM AND LOADS TRUCKS, BALER RUNS BALING MACHINE)

[ ] Mark (X) this box if you attach a continuation sheet.

9.06 Complete the following table for each work area identified in question 9.05, and for each labor category at your facility that encompasses workers who may potentially come in contact with or be exposed to the listed substance. Photocopy this question
CBI and complete it separately for each process type and work area.

[ ] Process type ..... FLEXIBLE SLABSTOCK POLYURETHANE FOAM MANUFACTURING

Work area 1

Labor Category	Number of Workers Exposed	Mode of Exposure (e.g., direct skin contact)	Physical State of Listed Substance[1]	Average Length of Exposure Per Day[2]	Number of Days per Year Exposed
A,C,D,F	4	DIRECT SKIN CONTACT	OL	A	248
A,C,D,F	4	INHALATION	GU	C	248

[1]Use the following codes to designate the physical state of the listed substance at the point of exposure:

GC = Gas (condensible at ambient temperature and pressure)
GU = Gas (uncondensible at ambient temperature and pressure; includes fumes, vapors, etc.)
SO = Solid
SY = Sludge or slurry
AL = Aqueous liquid
OL = Organic liquid
IL = Immiscible liquid (specify phases, e.g., 90% water, 10% toluene)

[2]Use the following codes to designate average length of exposure per day:

A = 15 minutes or less
B = Greater than 15 minutes, but not exceeding 1 hour
C = Greater than one hour, but not exceeding 2 hours
D = Greater than 2 hours, but not exceeding 4 hours
E = Greater than 4 hours, but not exceeding 8 hours
F = Greater than 8 hours

[X] Mark (X) this box if you attach a continuation sheet.

9.06 Complete the following table for each work area identified in question 9.05, and for each labor category at your facility that encompasses workers who may potentially come in contact with or be exposed to the listed substance. Photocopy this question and complete it separately for each process type and work area.

CBI

[ ] Process type ..... FLEXIBLE SLABSTOCK POLYURETHANE FOAM MANUFACTURING

Work area 2

Labor Category	Number of Workers Exposed	Mode of Exposure (e.g., direct skin contact)	Physical State of Listed Substance[1]	Average Length of Exposure Per Day[2]	Number of Days per Year Exposed
D	1	INHALATION	GU	C	248

[1]Use the following codes to designate the physical state of the listed substance at the point of exposure:

GC = Gas (condensible at ambient temperature and pressure)
GU = Gas (uncondensible at ambient temperature and pressure; includes fumes, vapors, etc.)
SO = Solid
SY = Sludge or slurry
AL = Aqueous liquid
OL = Organic liquid
IL = Immiscible liquid (specify phases, e.g., 90% water, 10% toluene)

[2]Use the following codes to designate average length of exposure per day:

A = 15 minutes or less
B = Greater than 15 minutes, but not exceeding 1 hour
C = Greater than one hour, but not exceeding 2 hours
D = Greater than 2 hours, but not exceeding 4 hours
E = Greater than 4 hours, but not exceeding 8 hours
F = Greater than 8 hours

[X] Mark (X) this box if you attach a continuation sheet.

9.06 Complete the following table for each work area identified in question 9.05, and for each labor category at your facility that encompasses workers who may potentially come in contact with or be exposed to the listed substance. Photocopy this question and complete it separately for each process type and work area.

CBI

[ ] Process type ..... FLEXIBLE SLABSTOCK POLYURETHANE FOAM MANUFACTURING

Work area 3

Labor Category	Number of Workers Exposed	Mode of Exposure (e.g., direct skin contact)	Physical State of Listed Substance[1]	Average Length of Exposure Per Day[2]	Number of Days per Year Exposed
D	1	INHALATION	GU	E	248

[1]Use the following codes to designate the physical state of the listed substance at the point of exposure:

GC = Gas (condensible at ambient temperature and pressure)
GU = Gas (uncondensible at ambient temperature and pressure; includes fumes, vapors, etc.)
SO = Solid
SY = Sludge or slurry
AL = Aqueous liquid
OL = Organic liquid
IL = Immiscible liquid (specify phases, e.g., 90% water, 10% toluene)

[2]Use the following codes to designate average length of exposure per day:

A = 15 minutes or less
B = Greater than 15 minutes, but not exceeding 1 hour
C = Greater than one hour, but not exceeding 2 hours
D = Greater than 2 hours, but not exceeding 4 hours
E = Greater than 4 hours, but not exceeding 8 hours
F = Greater than 8 hours

[X] Mark (X) this box if you attach a continuation sheet.

9.06 Complete the following table for each work area identified in question 9.05, and for each labor category at your facility that encompasses workers who may potentially come in contact with or be exposed to the listed substance. Photocopy this question
CBI and complete it separately for each process type and work area.

[ ] Process type ..... FLEXIBLE SLABSTOCK POLYURETHANE FOAM MANUFACTURING

Work area 4

Labor Category	Number of Workers Exposed	Mode of Exposure (e.g., direct skin contact)	Physical State of Listed Substance[1]	Average Length of Exposure Per Day[2]	Number of Days per Year Exposed
A,B,E,F,G	25	INHALATION	GU	E	248

[1]Use the following codes to designate the physical state of the listed substance at the point of exposure:

GC = Gas (condensible at ambient temperature and pressure)
GU = Gas (uncondensible at ambient temperature and pressure; includes fumes, vapors, etc.)
SO = Solid
SY = Sludge or slurry
AL = Aqueous liquid
OL = Organic liquid
IL = Immiscible liquid (specify phases, e.g., 90% water, 10% toluene)

[2]Use the following codes to designate average length of exposure per day:

A = 15 minutes or less
B = Greater than 15 minutes, but not exceeding 1 hour
C = Greater than one hour, but not exceeding 2 hours
D = Greater than 2 hours, but not exceeding 4 hours
E = Greater than 4 hours, but not exceeding 8 hours
F = Greater than 8 hours

[X] Mark (X) this box if you attach a continuation sheet.

9.07 For each labor category represented in question 9.06, indicate the 8-hour Time Weighted Average (TWA) exposure levels and the 15-minute peak exposure levels. Photocopy this question and complete it separately for each process type and work area.

CBI

[ ] Process type ..... FLEXIBLE SLABSTOCK POLYURETHANE FOAM MANUFACTURING

Work area 1

Labor Category	8-hour TWA Exposure Level (ppm, mg/m^3, other-specify)	15-Minute Peak Exposure Level (ppm, mg/m^3, other-specify)
A	.004 PPM	UK
C	.004 PPM	UK
D	.004 PPM	UK
E	.0028PPM	UK

[X] Mark (X) this box if you attach a continuation sheet.

9.07 For each labor category represented in question 9.06, indicate the 8-hour Time Weighted Average (TWA) exposure levels and the 15-minute peak exposure levels. Photocopy this question and complete it separately for each process type and work area.

CBI

[ ] Process type ..... FLEXIBLE SLABSTOCK POLYURETHANE FOAM MANUFACTURING

Work area 2

Labor Category	8-hour TWA Exposure Level (ppm, mg/m^3, other-specify)	15-Minute Peak Exposure Level (ppm, mg/m^3, other-specify)
D	.0014 PPM	UK

[X] Mark (X) this box if you attach a continuation sheet.

9.07 For each labor category represented in question 9.06, indicate the 8-hour Time Weighted Average (TWA) exposure levels and the 15-minute peak exposure levels. Photocopy this question and complete it separately for each process type and work area.

CBI

[ ] Process type ..... FLEXIBLE SLABSTOCK POLYURETHANE FOAM MANUFACTURING

Work area 3

Labor Category	8-hour TWA Exposure Level (ppm, mg/m^3, other-specify)	15-Minute Peak Exposure Level (ppm, mg/m^3, other-specify)
D	.0014 PPM	UK

[X] Mark (X) this box if you attach a continuation sheet.

9.07 For each labor category represented in question 9.06, indicate the 8-hour Time Weighted Average (TWA) exposure levels and the 15-minute peak exposure levels. Photocopy this question and complete it separately for each process type and work area.

CBI

[ ] Process type ..... FLEXIBLE SLABSTOCK POLYURETHANE FOAM MANUFACTURING

Work area 4

Labor Category	8-hour TWA Exposure Level (ppm, mg/m^3, other-specify)	15-Minute Peak Exposure Level (ppm, mg/m^3, other-specify)
A	NA	NA
B	NA	NA
E	NA	NA
F	NA	NA
G	NA	NA

[X] Mark (X) this box if you attach a continuation sheet.

PART B WORK PLACE MONITORING PROGRAM

9.08 If you monitor worker exposure to the listed substance, complete the following table.

CBI

[ ]

Sample/Test	Work Area ID	Testing Frequency (per year)	Number of Samples (per test)	Who Samples[1]	Analyzed In-House (Y/N)	Number of Years Records Maintained
Personal breathing zone	1-3	22	1	D	N	30
General work area (air)	1-3	22	1	D	N	30
Wipe samples	NA	NA	NA	NA	NA	NA
Adhesive patches	NA	NA	NA	NA	NA	NA
Blood samples	NA	NA	NA	NA	NA	NA
Urine samples	NA	NA	NA	NA	NA	NA
Respiratory samples	NA	NA	NA	NA	NA	NA
Allergy tests	NA	NA	NA	NA	NA	NA
Other (specify) NA	NA	NA	NA	NA	NA	NA
Other (specify) COMPLETE PHYSICAL	1-3	1	1	D	N	30
Other (specify)						

[1]Use the following codes to designate who takes the monitoring samples:

A = Plant industrial hygienist
B = Insurance carrier
C = OSHA consultant
D = Other (specify) FOAM MACHINE SUPERINTENDENT

D= INDURSTRIAL MEDICAL CLINIC (COMPLETE PHYSICALS)

[ ] Mark (X) this box if you attach a continuation sheet.

9.09 For each sample type identified in question 9.08, describe the type of sampling and analytical methodology used for each type of sample.
CBI

[ ] Sample Type	Sampling and Analytical Methodology
PERSONAL BREATHING ZONE	A MEASURED VOLUME OF AIR IS DRAWN THROUGH A TREATED PAPER TAPE. THE TAPE DEVELOPS COLOR IN PROPORTION TO THE TDI EXPOSURE.
GENERAL WORK AREA	A MEASURED VOLUME OF AIR IS DRAWN THROUGH A TREATED PAPER TAPE. IT DEVELOPS COLOR IN PROPORTION TO THE TDI EXPOSURE.

9.10 If you conduct personal and/or ambient air monitoring for the listed substance, specify the following information for each equipment type used.
CBI

[ ] Equipment Type[1]	Detection Limit[2]	Manufacturer	Averaging Time (hr)	Model Number
D	.005 A PPM	GMD SYSTEMS	8	550-10

[1]Use the following codes to designate personal air monitoring equipment types:

A = Passive dosimeter
B = Detector tube
C = Charcoal filtration tube with pump
D = Other (specify) EXPOSED PAPER TAPE

Use the following codes to designate ambient air monitoring equipment types:

E = Stationary monitors located within work area
F = Stationary monitors located within facility
G = Stationary monitors located at plant boundary
H = Mobile monitoring equipment (specify) EXPOSED PAPER TAPE
I = Other (specify) _____

[2]Use the following codes to designate detection limit units:

A = ppm
B = Fibers/cubic centimeter (f/cc)
C = Micrograms/cubic meter (μ/m^3)

[ ] Mark (X) this box if you attach a continuation sheet.

9.11 If you conduct routine medical tests for monitoring the health effects of exposure to the listed substance, specify the type and frequency of the tests.

CBI

[ ] Test Description	Frequency (weekly, monthly, yearly, etc.)
PULMONARY FUNCTION TEST	YEARLY
PHYSICAL EXAMINATION	YEARLY

[ ] Mark (X) this box if you attach a continuation sheet.

PART C ENGINEERING CONTROLS

9.12 Describe the engineering controls that you use to reduce or eliminate worker exposure to the listed substance. Photocopy this question and complete it separately for each process type and work area.

CBI

[ ] Process type ..... FLEXIBLE SLABSTOCK POLYURETHANE FOAM MANUFACTURING

Work area 1

Engineering Controls	Used (Y/N)	Year Installed	Upgraded (Y/N)	Year Upgraded
Ventilation:				
Local exhaust	Y	1981	Y	1983,1986
General dilution	Y	1981	N	
Other (specify)				
FOAM LINE EXPOSURE	Y	1982	N	
Vessel emission controls	Y	1981	N	
Mechanical loading or packaging equipment	NA	NA	NA	NA
Other (specify)				
	NA	NA	NA	NA

[ ] Mark (X) this box if you attach a continuation sheet.

PART C ENGINEERING CONTROLS

9.12 Describe the engineering controls that you use to reduce or eliminate worker exposure to the listed substance. Photocopy this question and complete it separately for each process type and work area.

CBI

[ ] Process type ..... FLEXIBLE SLABSTOCK POLYURETHANE FOAM MANUFACTURING

Work area 2

Engineering Controls	Used (Y/N)	Year Installed	Upgraded (Y/N)	Year Upgraded
Ventilation:				
Local exhaust	Y	1981	Y	1983,1986
General dilution	Y	1981	N	
Other (specify)				
CUT-OFF SAW ENCLOSURE	Y	1982	N	
Vessel emission controls	NA	NA	NA	NA
Mechanical loading or packaging equipment	NA	NA	NA	NA
Other (specify)				
	NA	NA	NA	NA

[ ] Mark (X) this box if you attach a continuation sheet.

PART C ENGINEERING CONTROLS

9.12 Describe the engineering controls that you use to reduce or eliminate worker exposure to the listed substance. Photocopy this question and complete it separately for each process type and work area.

CBI

[ ] Process type ..... FLEXIBLE SLABSTOCK POLYURETHANE FOAM MANUFACTURING

Work area 3

Engineering Controls	Used (Y/N)	Year Installed	Upgraded (Y/N)	Year Upgraded
Ventilation:				
Local exhaust	Y	1981	N	
General dilution	Y	1981	N	
Other (specify)				
	NA	NA	NA	NA
Vessel emission controls	NA	NA	NA	NA
Mechanical loading or packaging equipment	NA	NA	NA	NA
Other (specify)				
	NA	NA	NA	NA

[X] Mark (X) this box if you attach a continuation sheet.

PART C ENGINEERING CONTROLS

9.12 Describe the engineering controls that you use to reduce or eliminate worker exposure to the listed substance. Photocopy this question and complete it separately for each process type and work area.

CBI

[ ] Process type ..... FLEXIBLE SLABSTOCK POLYURETHANE FOAM MANUFACTURING

Work area 4

Engineering Controls	Used (Y/N)	Year Installed	Upgraded (Y/N)	Year Upgraded
Ventilation:				
Local exhaust	NA	NA	NA	NA
General dilution	Y	1981	N	
Other (specify)				
	NA	NA	NA	NA
Vessel emission controls	NA	NA	NA	NA
Mechanical loading or packaging equipment	NA	NA	NA	NA
Other (specify)				
	NA	NA	NA	NA

[ ] Mark (X) this box if you attach a continuation sheet.

9.13 Describe all equipment or process modifications you have made within the 3 years prior to the reporting year that have resulted in a reduction of worker exposure to the listed substance. For each equipment or process modification described, state the percentage reduction in exposure that resulted. Photocopy this question and complete it separately for each process type and work area.

CBI

[ ] Process type ..... FLEXIBLE SLABSTOCK POLYURETHANE FOAM MANUFACTURING

Work area 1

Equipment or Process Modification	Reduction in Worker Exposure Per Year (%)
INSTALLED EXHAUST FANS FURTHER ENCLOSED TUNNEL AREA	UK
CHANGE FROM FOUR TDI INJECTION NOZZLES TO ONE OF A DIFFERENT TYPE	25% (ESTIMATE)

[X] Mark (X) this box if you attach a continuation sheet.

9.13 Describe all equipment or process modifications you have made within the 3 years prior to the reporting year that have resulted in a reduction of worker exposure to the listed substance. For each equipment or process modification described, state the percentage reduction in exposure that resulted. Photocopy this question and complete it separately for each process type and work area.

CBI

[ ] Process type ..... FLEXIBLE SLABSTOCK POLYURETHANE FOAM MANUFACTURING

Work area 2

Equipment or Process Modification	Reduction in Worker Exposure Per Year (%)
INSTALLED EXHAUST FANS, FURTHER ENCLOSED TUNNEL AREA	UK
	NOT A NORMAL WORK AREA

[X] Mark (X) this box if you attach a continuation sheet.

9.13 Describe all equipment or process modifications you have made within the 3 years prior to the reporting year that have resulted in a reduction of worker exposure to the listed substance. For each equipment or process modification described, state the percentage reduction in exposure that resulted. Photocopy this question and complete it separately for each process type and work area.

CBI

[ ] Process type ..... FLEXIBLE SLABSTOCK POLYURETHANE FOAM MANUFACTURING

Work area 3

Equipment or Process Modification	Reduction in Worker Exposure Per Year (%)
UK	

[X] Mark (X) this box if you attach a continuation sheet.

9.13 Describe all equipment or process modifications you have made within the 3 years prior to the reporting year that have resulted in a reduction of worker exposure to the listed substance. For each equipment or process modification described, state the percentage reduction in exposure that resulted. Photocopy this question and complete it separately for each process type and work area.

CBI

[ ] Process type ..... FLEXIBLE SLABSTOCK POLYURETHANE FOAM MANUFACTURING

Work area 4

Equipment or Process Modification	Reduction in Worker Exposure Per Year (%)
UK	

[ ] Mark (X) this box if you attach a continuation sheet.

PART D PERSONAL PROTECTIVE AND SAFETY EQUIPMENT

9.14 Describe the personal protective and safety equipment that your workers wear or use in each work area in order to reduce or eliminate their exposure to the listed substance. Photocopy this question and complete it separately for each process type and work area.

CBI

[ ] Process type ..... FLEXIBLE SLABSTOCK POLYURETHANE FOAM MANUFACTURING

Work area 1

Equipment Types	Wear or Use (Y/N)
Respirators	Y
Safety goggles/glasses	Y
Face shields	Y
Coveralls	N
Bib aprons	N
Chemical-resistant gloves	Y
Other (specify)	
SAFETY SHOES	Y
EYE WASH/SAFETY SHOWER	Y

[ ] Mark (X) this box if you attach a continuation sheet.

PART D PERSONAL PROTECTIVE AND SAFETY EQUIPMENT

9.14 Describe the personal protective and safety equipment that your workers wear or use in each work area in order to reduce or eliminate their exposure to the listed substance. Photocopy this question and complete it separately for each process type and work area.

CBI

[ ] Process type ..... FLEXIBLE SLABSTOCK POLYURETHANE FOAM MANUFACTURING

Work area 2

Equipment Types	Wear or Use (Y/N)
Respirators	Y
Safety goggles/glasses	Y
Face shields	N
Coveralls	N
Bib aprons	N
Chemical-resistant gloves	N
Other (specify)	
SAFETY SHOES	Y

[X] Mark (X) this box if you attach a continuation sheet.

PART D PERSONAL PROTECTIVE AND SAFETY EQUIPMENT

9.14 Describe the personal protective and safety equipment that your workers wear or use in each work area in order to reduce or eliminate their exposure to the listed substance. Photocopy this question and complete it separately for each process type and work area.

CBI

[ ] Process type ..... FLEXIBLE SLABSTOCK POLYURETHANE FOAM MANUFACTURING

Work area 3

Equipment Types	Wear or Use (Y/N)
Respirators	Y
Safety goggles/glasses	Y
Face shields	N
Coveralls	N
Bib aprons	N
Chemical-resistant gloves	N
Other (specify)	
SAFETY SHOES	Y

[X] Mark (X) this box if you attach a continuation sheet.

PART D PERSONAL PROTECTIVE AND SAFETY EQUIPMENT

9.14 Describe the personal protective and safety equipment that your workers wear or use in each work area in order to reduce or eliminate their exposure to the listed substance. Photocopy this question and complete it separately for each process type and work area.

CBI

[ ] Process type ..... FLEXIBLE SLABSTOCK POLYURETHANE FOAM MANUFACTURING

Work area 4

Equipment Types	Wear or Use (Y/N)
Respirators	N
Safety goggles/glasses	N
Face shields	N
Coveralls	N
Bib aprons	N
Chemical-resistant gloves	N
Other (specify)	
SAFETY SHOES	Y

[ ] Mark (X) this box if you attach a continuation sheet.

9.15 If workers use respirators when working with the listed substance, specify for each process type, the work areas where the respirators are used, the type of respirators used, the average usage, whether or not the respirators were fit tested, and the type and frequency of the fit tests. Photocopy this question and complete it separately for each process type.

CBI

[ ] Process type ..... FLEXIBLE SLABSTOCK POLYURETHANE FOAM MANUFACTURING

Work Area	Respirator Type	Average Usage[1]	Fit Tested (Y/N)	Type of Fit Test[2]	Frequency of Fit Tests (per year)
1-3	3M ORGANIC VAPOR RESPIRATOR	A	Y	QL	1
4	NA	NA	NA	NA	NA

[1]Use the following codes to designate average usage:

A = Daily
B = Weekly
C = Monthly
D = Once a year
E = Other (specify) _____

[2]Use the following codes to designate the type of fit test:

QL = Qualitative
QT = Quantitative

[ ] Mark (X) this box if you attach a continuation sheet.

PART E WORK PRACTICES

9.19 Describe all of the work practices and administrative controls used to reduce or eliminate worker exposure to the listed substance (e.g., restrict entrance only to authorized workers, mark areas with warning signs, insure worker detection and monitoring practices, provide worker training programs, etc.). Photocopy this question and complete it separately for each process type and work area.

CBI

[ ]

Process type ..... FLEXIBLE SLABSTOCK POLYURETHANE FOAM MANUFACTURING

Work area 1, 2, 3

ONGOING WORKER TRAINING PROGRAM

PROTECTIVE EQUIPMENT PROVIDED

PERIODIC EXPOSURE MONITORING

RESPIRATOR PROTECTION PROVIDED

9.20 Indicate (X) how often you perform each housekeeping task used to clean up routine leaks or spills of the listed substance. Photocopy this question and complete it separately for each process type and work area.

Process type ..... FLEXIBLE SLABSTOCK POLYURETHANE FOAM MANUFACTURING

Work area 1, 2, 3, 4

Housekeeping Tasks	Less Than Once Per Day	1-2 Times Per Day	3-4 Times Per Day	More Than 4 Times Per Day
Sweeping	NA	NA	NA	NA
Vacuuming	NA	NA	NA	NA
Water flushing of floors	NA	NA	NA	NA

Other (specify)

SPILLS AND/OR LEAKS OF TDI ARE CLEANED UP IMMEDIATELY AS THEY OCCUR. THE MATERIAL IS THEN NEUTRALIZED AND DISPOSED OF IN AN APPROVED MANNER.

[ ] Mark (X) this box if you attach a continuation sheet.

9.21 Do you have a written medical action plan for responding to routine or emergency exposure to the listed substance?

Routine exposure

Yes .....NA..... 1

No 2

Emergency exposure

Yes 1

No 2

If yes, where are copies of the plan maintained?

Routine exposure: _____

Emergency exposure: _____

9.22 Do you have a written leak and spill cleanup plan that addresses the listed substance? Circle the appropriate response.

Yes ..... (1)

No 2

If yes, where are copies of the plan maintained? ALL MANAGEMENT PERSONNEL HAVE A COPY.

Has this plan been coordinated with state or local government response organizations? Circle the appropriate response.

Yes ..... (1)

No 2

9.23 Who is responsible for monitoring worker safety at your facility? Circle the appropriate response.

Plant safety specialist .....NA..... 1

Insurance carrier 2

OSHA consultant 3

Other (specify) _____ 4

[ ] Mark (X) this box if you attach a continuation sheet.

SECTION 10 ENVIRONMENTAL RELEASE

General Instructions:

Complete Part E (questions 10.23-10.35) for each non-routine release involving the listed substance that occurred during the reporting year. Report on all releases that are equal to or greater than the listed substance's reportable quantity value, RQ, unless the release is federally permitted as defined in 42 U.S.C. 9601, or is specifically excluded under the definition of release as defined in 40 CFR 302.3(22). Reportable quantities are codified in 40 CFR Part 302. If the listed substance is not a hazardous substance under the Comprehensive Environmental Response, Compensation, and Liability Act of 1980 (CERCLA) and, thus, does not have an RQ, then report releases that exceed 2,270 kg. If such a substance however, is designated as a CERCLA hazardous substance, then report those releases that are equal to or greater than the RQ. The facility may have answered these questions or similar questions under the Agency's Accidental Release Information Program and may already have this information readily available. Assign a number to each release and use this number throughout this part to identify the release. Releases over more than a 24-hour period are not single releases, i.e., the release of a chemical substance equal to or greater than an RQ must be reported as a separate release for each 24-hour period the release exceeds the RQ.

For questions 10.25-10.35, answer the questions for each release identified in question 10.23. Photocopy these questions and complete them separately for each release.

PART A GENERAL INFORMATION

10.01 Where is your facility located? Circle all appropriate responses.

CBI

[__] Industrial area 1

Urban area 2

Residential area 3

Agricultural area 4

Rural area 5

Adjacent to a park or a recreational area 6

Within 1 mile of a navigable waterway 7

Within 1 mile of a school, university, hospital, or nursing home facility 8

Within 1 mile of a non-navigable waterway 9

Other (specify) _____ 10

[__] Mark (X) this box if you attach a continuation sheet.

10.02 Specify the exact location of your facility (from central point where process unit is located) in terms of latitude and longitude or Universal Transverse Mercader (UTM) coordinates.

Latitude ..... 33 ° 40 ' 40 "

Longitude ..... 84 ° 2 ' 30 "

UTM coordinates ..... Zone NA, Northing NA, Easting NA

10.03 If you monitor meteorological conditions in the vicinity of your facility, provide the following information.

Average annual precipitation ..... NA inches/year

Predominant wind direction ..... NA

10.04 Indicate the depth to groundwater below your facility.

Depth to groundwater ..... NA meters

10.05 For each on-site activity listed, indicate (Y/N/NA) all routine releases of the listed substance to the environment. (Refer to the instructions for a definition of Y, N, and NA.)

CBI

[ ]

On-Site Activity	Environmental Release Air	Water	Land
Manufacturing	NA	NA	NA
Importing	NA	NA	NA
Processing	Y	N	N
Otherwise used	NA	NA	NA
Product or residual storage	Y	N	N
Disposal	NA	NA	NA
Transport	NA	NA	NA

[ ] Mark (X) this box if you attach a continuation sheet.

10.06 Provide the following information for the listed substance and specify the level of precision for each item. (Refer to the instructions for further explanation and an example.)

CBI

[ ]

Quantity discharged to the air	16.1	kg/yr	± 10	%
Quantity discharged in wastewaters	NA	kg/yr	±	%
Quantity managed as other waste in on-site treatment, storage, or disposal units	NA	kg/yr	±	%
Quantity managed as other waste in off-site treatment, storage, or disposal units	NA	kg/yr	±	%

[ ] Mark (X) this box if you attach a continuation sheet.

10.08 Describe the control technologies used to minimize release of the listed substance for each process stream containing the listed substance as identified in your process block or residual treatment block flow diagram(s). Photocopy this question and complete it separately for each process type.

CBI

[ ] Process type ..... FLEXIBLE SLABSTOCK POLYURETHANE FOAM MANUFACTURING

Stream ID Code	Control Technology	Percent Efficiency
7H	NO CONTROL TECHNOLOGY - DISCHARGED	TO ATMOSPHERE
7Y,AA,CC,FF	NO CONTROL TECHNOLOGY - DISCHARGED	TO ATMOSPHERE

[ ] Mark (X) this box if you attach a continuation sheet.

PART B RELEASE TO AIR

10.09 Point Source Emissions -- Identify each emission point source containing the listed substance in terms of a Stream ID Code as identified in your process block or residual treatment block flow diagram(s), and provide a description of each point source. Do not include raw material and product storage vents, or fugitive emission sources (e.g., equipment leaks). Photocopy this question and complete it separately for each process type.

CBI
[ ]

Process type ..... FLEXIBLE SLABSTOCK POLYURETHANE FOAM MANUFACTURING

Point Source ID Code	Description of Emission Point Source
7H	TDI BULK TANK VENT
7Y	REACTION ZONE VENT FANS
7AA	CONVEYOR SYSTEM VENT FANS
7CC	CUT-OFF SAW VENT FANS
7FF	HOT FOAM CURING AND STORAGE VENT FANS

[ ] Mark (X) this box if you attach a continuation sheet.

10.10 Emission Characteristics - - Characterize the emissions for each Point Source ID Code identified in question 10.09 by completing the following table.

CBI

[ ]

Point Source ID Code	Physical State[1]	Average Emissions (kg/day)	Frequency[2] (days/yr)	Duration[3] (min/day)	Average Emission Factor[4]	Maximum Emission Rate (kg/min)	Maximum Emission Rate Frequency (events/yr)	Maximum Emission Rate Duration (min/event)
7H	V	.0147	17	180	1.06×10^{-8}	8.17×10^{-5}	17	180
7Y	V	.038	248	90	6.9×10^{-6}	4.27×10^{-4}	248	90
7AA	V	.016	248	90	2.87×10^{-6}	1.78×10^{-4}	248	90
7CC	V	.006	248	90	1.15×10^{-6}	7.11×10^{-5}	248	90
7FF	V	.0032	248	90	5.75×10^{-7}	3.55×10^{-5}	248	90

[1]Use the following codes to designate physical state at the point of release:
G = Gas; V = Vapor; P = Particulate; A = Aerosol; O = Other (specify) _____

[2]Frequency of emission at any level of emission

[3]Duration of emission at any level of emission

[4]Average Emission Factor — Provide estimated (± 25 percent) emission factor (kg of emission per kg of production of listed substance)

[ ] Mark (X) this box if you attach a continuation sheet.

10.11 Stack Parameters -- Identify the stack parameters for each Point Source ID Code identified in question 10.09 by completing the following table.

CBI

[ ]

Point Source ID Code	Stack Height(m)	Stack Inner Diameter (at outlet) (m)	Exhaust Temperature (°C)	Emission Exit Velocity (m/sec)	Building Height(m)[1]	Building Width(m)[2]	Vent Type[3]
7Y	.81	1 @ .61	25	11.4	6.40	24.38	H
7Y	.81	2 @ 1.22	25	11.4	5.99	24.38	H
7CC	.81	1 @ 1.22	25	11.4	5.99	97.54	H

[1]Height of attached or adjacent building

[2]Width of attached or adjacent building

[3]Use the following codes to designate vent type:

H = Horizontal
V = Vertical

[ ] Mark (X) this box if you attach a continuation sheet.

10.12 If the listed substance is emitted in particulate form, indicate the particle size distribution for each Point Source ID Code identified in question 10.09. Photocopy this question and complete it separately for each emission point source.

CBI

[ ]

Point source ID code ..... NA

Size Range (microns)	Mass Fraction (% ± % precision)
< 1	NA
≥ 1 to < 10	NA
≥ 10 to < 30	NA
≥ 30 to < 50	NA
≥ 50 to < 100	NA
≥ 100 to < 500	NA
≥ 500	NA

Total = 100%

[ ] Mark (X) this box if you attach a continuation sheet.

PART C FUGITIVE EMISSIONS

10.13 Equipment Leaks -- Complete the following table by providing the number of equipment types listed which are exposed to the listed substance and which are in service according to the specified weight percent of the listed substance passing through the component. Do this for each process type identified in your process block or residual treatment block flow diagram(s). Do not include equipment types that are not exposed to the listed substance. If this is a batch or intermittently operated process, give an overall percentage of time per year that the process type is exposed to the listed substance. Photocopy this question and complete it separately for each process type.

CBI

[ ] Process type ..... FLEXIBLE SLABSTOCK POLYURETHANE FOAM MANUFACTURING

Percentage of time per year that the listed substance is exposed to this process type ..... 100 %

Equipment Type	Number of Components in Service by Weight Percent of Listed Substance in Process Stream					
	Less than 5%	5-10%	11-25%	26-75%	76-99%	Greater than 99%
Pump seals[1]						
Packed	NA	NA	NA	NA	NA	NA
Mechanical	NA	NA	NA	NA	NA	NA
Double mechanical[2]	NA	NA	NA	NA	NA	1
Compressor seals[1]	NA	NA	NA	NA	NA	NA
Flanges	NA	NA	NA	NA	NA	6
Valves						
Gas[3]	NA	NA	NA	NA	NA	NA
Liquid	1	NA	NA	NA	NA	11
Pressure relief devices[4] (Gas or vapor only)	NA	NA	NA	NA	NA	1
Sample connections						
Gas	NA	NA	NA	NA	NA	NA
Liquid	NA	NA	NA	NA	NA	NA
Open-ended lines[5] (e.g., purge, vent)						
Gas	NA	NA	NA	NA	NA	NA
Liquid	NA	NA	NA	1	NA	1

[1]List the number of pump and compressor seals, rather than the number of pumps or compressors

10.13 continued on next page

[ ] Mark (X) this box if you attach a continuation sheet.

10.13 (continued)

[2]If double mechanical seals are operated with the barrier (B) fluid at a pressure greater than the pump stuffing box pressure and/or equipped with a sensor (S) that will detect failure of the seal system, the barrier fluid system, or both, indicate with a "B" and/or an "S", respectively

[3]Conditions existing in the valve during normal operation

[4]Report all pressure relief devices in service, including those equipped with control devices

[5]Lines closed during normal operation that would be used during maintenance operations

10.14 Pressure Relief Devices with Controls -- Complete the following table for those pressure relief devices identified in 10.13 to indicate which pressure relief devices in service are controlled. If a pressure relief device is not controlled, enter "None" under column c.

CBI

[ ]

a. Number of Pressure Relief Devices	b. Percent Chemical in Vessel[1]	c. Control Device	d. Estimated Control Efficiency[2]
1	>99	NONE	100%

[1]Refer to the table in question 10.13 and record the percent range given under the heading entitled "Number of Components in Service by Weight Percent of Listed Substance" (e.g., <5%, 5-10%, 11-25%, etc.)

[2]The EPA assigns a control efficiency of 100 percent for equipment leaks controlled with rupture discs under normal operating conditions. The EPA assigns a control efficiency of 98 percent for emissions routed to a flare under normal operating conditions

[ ] Mark (X) this box if you attach a continuation sheet.

10.15 Equipment Leak Detection -- If a formal leak detection and repair program is in place, complete the following table regarding those leak detection and repair procedures. Photocopy this question and complete it separately for each process type.

CBI

[__] Process type ..... NA

Equipment Type	Leak Detection Concentration (ppm or mg/m^3) Measured at ____ Inches from Source	Detection Device[1]	Frequency of Leak Detection (per year)	Repairs Initiated (days after detection)	Repairs Completed (days after initiated)
Pump seals					
Packed					
Mechanical					
Double mechanical					
Compressor seals					
Flanges					
Valves					
Gas					
Liquid					
Pressure relief devices (gas or vapor only)					
Sample connections					
Gas					
Liquid					
Open-ended lines					
Gas					
Liquid					

[1]Use the following codes to designate detection device:

POVA = Portable organic vapor analyzer
FPM = Fixed point monitoring
O = Other (specify) _____

[__] Mark (X) this box if you attach a continuation sheet.

10.16 Raw Material, Intermediate and Product Storage Emissions - - Complete the following table by providing the information on each liquid raw material, intermediate, and product storage vessel containing the listed substance as identified in your process block or residual treatment block flow diagram(s).

CBI

[ ]

Vessel Type[1]	Floating Roof Seals[2]	Composition of Stored Materials[3]	Throughput (liters per year)	Vessel Filling Rate (gpm)	Vessel Filling Duration (min)	Vessel Inner Diameter (m)	Vessel Height (m)	Operating Vessel Volume (l)	Vessel Emission Controls[4]	Design Flow Rate[5]	Vent Diameter (cm)	Control Efficiency (%)	Basis for Estimate[6]
H	NA	100%	1,132,000	98	180	3.53	4.31	117,400	NONE	NA	7.62	NA	NA

[1]Use the following codes to designate vessel type:

F = Fixed roof
CIF = Contact internal floating roof
NCIF = Noncontact internal floating roof
EFR = External floating roof
P = Pressure vessel (indicate pressure rating)
H = Horizontal
U = Underground

[2]Use the following codes to designate floating roof seals:

MS1 = Mechanical shoe, primary
MS2 = Shoe-mounted secondary
MS2R = Rim-mounted, secondary
LM1 = Liquid-mounted resilient filled seal, primary
LM2 = Rim-mounted shield
LMW = Weather shield
VM1 = Vapor mounted resilient filled seal, primary
VM2 = Rim-mounted secondary
VMW = Weather shield

[3]Indicate weight percent of the listed substance. Include the total volatile organic content in parenthesis

[4]Other than floating roofs

[5]Gas/vapor flow rate the emission control device was designed to handle (specify flow rate units)

[6]Use the following codes to designate basis for estimate of control efficiency:

C = Calculations
S = Sampling

[ ] Mark (X) this box if you attach a continuation sheet.

PART E NON-ROUTINE RELEASES

10.23 Indicate the date and time when the release occurred and when the release ceased or was stopped. If there were more than six releases, attach a continuation sheet and list all releases.

Release	Date Started	Time (am/pm)	Date Stopped	Time (am/pm)
1	NO NON-ROUTINE RELEASES			
2				
3				
4				
5				
6				

10.24 Specify the weather conditions at the time of each release.

Release	Wind Speed (km/hr)	Wind Direction	Humidity (%)	Temperature (°C)	Precipitation (Y/N)
1	NA				
2					
3					
4					
5					
6					

[ ] Mark (X) this box if you attach a continuation sheet.

APPENDIX I: List of Continuation Sheets

Attach continuation sheets for sections of this form and optional information after this page. In column 1, clearly identify the continuation sheet by listing the question number to which it relates. In column 2, enter the inclusive page numbers of the continuation sheet for each question number.

Question Number (1)	Continuation Sheet Page Numbers (2)
4.02	25A-25G
7.04	45A
7.06	47A
9.06	93A-93C
9.07	94A-94C
9.12	98A-98C
9.13	99A-99C
9.14	100A-100C

[ ] Mark (X) this box if you attach a continuation sheet.