CONTAINS NO CBI

EPA

Form Approved
OMB No. 2010-0019
Approval Expires 12-31-89

EPA-OTS

0006223695

90-890000349

89 JUL -5 PM 2:37
OTS DOCUMENT CONTROL OFFICE

UNITED STATES ENVIRONMENTAL PROTECTION AGENCY

Comprehensive Assessment Information Rule

REPORTING FORM

When completed, send this form to:	For Agency Use Only:
Document Processing Center Office of Toxic Substances, TS-790 U.S. Environmental Protection Agency 401 M Street, SW Washington, DC 20460 Attention: CAIR Reporting Office	Date of Receipt: _____ Document Control Number: _____ Docket Number: _____

EPA Form 7710-52

SECTION 1 GENERAL MANUFACTURER, IMPORTER, AND PROCESSOR INFORMATION

PART A GENERAL REPORTING INFORMATION

1.01 This Comprehensive Assessment Information Rule (CAIR) Reporting Form has been completed in response to the Federal Register Notice of..... [1][2] [2][2] [8][8]
mo. day year

CBI

[ ] a. If a Chemical Abstracts Service Number (CAS No.) is provided in the Federal Register, list the CAS No. ..... [0][2][6][4][7][1]-[6][2]-[5]

b. If a chemical substance CAS No. is not provided in the Federal Register, list either (i) the chemical name, (ii) the mixture name, or (iii) the trade name of the chemical substance as provided in the Federal Register.

(i) Chemical name as listed in the rule ..... N/A

(ii) Name of mixture as listed in the rule .... N/A

(iii) Trade name as listed in the rule ..... N/A

c. If a chemical category is provided in the Federal Register, report the name of the category as listed in the rule, the chemical substance CAS No. you are reporting on which falls under the listed category, and the chemical name of the substance you are reporting on which falls under the listed category.

Name of category as listed in the rule ..... N/A

CAS No. of chemical substance .....N/A..... [ ][ ][ ][ ][ ][ ]-[ ][ ]-[ ]

Name of chemical substance ..... N/A

1.02 Identify your reporting status under CAIR by circling the appropriate response(s).

CBI

Manufacturer 1

[ ] Importer 2

Processor ..... (3)

X/P manufacturer reporting for customer who is a processor 4

X/P processor reporting for customer who is a processor 5

[ ] Mark (X) this box if you attach a continuation sheet.

1.03 Does the substance you are reporting on have an "x/p" designation associated with it in the above-listed Federal Register Notice?

CBI [ ]

Yes ..... [X] Go to question 1.04

No ..... [ ] Go to question 1.05

1.04 a. Do you manufacture, import, or process the listed substance and distribute it under a trade name(s) different than that listed in the Federal Register Notice? Circle the appropriate response.

CBI [ ]

Yes 1

No ..... (2)

b. Check the appropriate box below:

[ ] You have chosen to notify your customers of their reporting obligations

Provide the trade name(s) .... N/A

N/A

[ ] You have chosen to report for your customers

[ ] You have submitted the trade name(s) to EPA one day after the effective date of the rule in the Federal Register Notice under which you are reporting.

1.05 If you buy a trade name product and are reporting because you were notified of your reporting requirements by your trade name supplier, provide that trade name.

CBI [ ]

Trade name ..... Voranate (R) T-80 Type I; Mondur TD-80 Grade A

Is the trade name product a mixture? Circle the appropriate response.

Yes 1

No ..... (2)

1.06 Certification -- The person who is responsible for the completion of this form must sign the certification statement below:

CBI [ ]

"I hereby certify that, to the best of my knowledge and belief, all information entered on this form is complete and accurate."

Adrian Bobeck	Adrian Bobeck	June 22, 1989
NAME	SIGNATURE	DATE SIGNED

Plant Manager	(505) 589 - 1167
TITLE	TELEPHONE NO.

[ ] Mark (X) this box if you attach a continuation sheet.

1.07 Exemptions From Reporting -- If you have provided EPA or another Federal agency with the required information on a CAIR Reporting Form for the listed substance within the past 3 years, and this information is current, accurate, and complete for the time period specified in the rule, then sign the certification below. You are required to complete section 1 of this CAIR form and provide any information now required but not previously submitted. Provide a copy of any previous submissions along with your Section 1 submission.

CBI [__]

"I hereby certify that, to the best of my knowledge and belief, all required information which I have not included in this CAIR Reporting Form has been submitted to EPA within the past 3 years and is current, accurate, and complete for the time period specified in the rule."

N/A	N/A	N/A
NAME	SIGNATURE	DATE SIGNED
N/A	(_____) N/A _	N/A
TITLE	TELEPHONE NO.	DATE OF PREVIOUS SUBMISSION

1.08 CBI Certification -- If you have asserted any CBI claims in this report you must certify that the following statements truthfully and accurately apply to all of those confidentiality claims which you have asserted.

CBI [__]

"My company has taken measures to protect the confidentiality of the information, and it will continue to take these measures; the information is not, and has not been, reasonably ascertainable by other persons (other than government bodies) by using legitimate means (other than discovery based on a showing of special need in a judicial or quasi-judicial proceeding) without my company's consent; the information is not publicly available elsewhere; and disclosure of the information would cause substantial harm to my company's competitive position."

N/A	N/A	N/A
NAME	SIGNATURE	DATE SIGNED
N/A	(_____) N/A _	
TITLE	TELEPHONE NO.	

[__] Mark (X) this box if you attach a continuation sheet.

PART B CORPORATE DATA

1.09 Facility Identification

CBI Name [F]O]A]M]E]X]_]P]R]O]D]U]C]T]S]_]I]N]C]_]_]_]_]_]_]

[_] Address [2]5]0]0]_]A]I]R]P]O]R]T]_]R]D]_]_]B]O]X]_]1]1]9]9]
Street

[S]A]N]T]A]_]T]E]R]E]S]A]_]_]_]_]_]_]_]_]_]_]_]_]_]_]
City

[N]M] [8]8]0]0]8]--[1]1]9]9]
State Zip

Dun & Bradstreet Number .....[1]5]-[3]5]7]-[5]7]5]8]

EPA ID Number .....[9]8]1]1]4]9]7]0]1]

Employer ID Number .....[5]0]4]0]7]6]9]0]

Primary Standard Industrial Classification (SIC) Code .....[3]0]8]6]

Other SIC Code .....[_]_]_]_]

Other SIC Code .....[_]_]_]_]

1.10 Company Headquarters Identification

CBI Name [_]F]O]A]M]E]X]_]P]R]O]D]U]C]T]S]_]I]N]C]_]_]_]_]_]_]

[_] Address [_]8]2]3]_]W]A]T]E]R]M]A]N]_]A]V]E]N]U]E]_]_]_]_]_]
Street

[_]E]_]P]R]O]V]I]D]E]N]C]E]_]_]_]_]_]_]_]_]_]_]_]_]_]_]
City

[R]I] [0]2]9]1]4]--[4]1]5]9]
State Zip

Dun & Bradstreet Number .....[1]0]-[6]1]8]-[7]3]5]4]

Employer ID Number .....[5]0]4]0]7]6]9]0]

[_] Mark (X) this box if you attach a continuation sheet.

1.11 Parent Company Identification

CBI Name [ ]K]N]O]L]L]]I]N]T]L]]H]O]L]D]I]N]G]S]]I]N]C]]

[ ] Address [ ]1]5]3]]E]A]S]T]]5]3]R]D]]S]T]]

Street

[ ]S]U]I]T]E]]5]9]0]0]]N]E]W]]Y]O]R]K]]

City

[N]Y] [1]0]0]2]2]--[ ]

State Zip

Dun & Bradstreet Number .....[0]5]-[6]3]4]-[1]6]0]5]

1.12 Technical Contact

CBI Name [N]A]R]A]Y]A]N]]P]A]T]E]L]]

[ ] Title [T]E]C]H]N]I]C]A]L]]M]A]N]A]G]E]R]]

Address [2]5]0]0]]A]I]R]P]O]R]T]]R]D]]B]O]X]]1]1]9]9]

Street

[S]A]N]T]A]]T]E]R]E]S]A]]

City

[N]M] [8]8]0]0]8]--[1]1]9]9]

State Zip

Telephone Number .....[5]0]5]-[5]8]9]-[1]1]6]7]

1.13 This reporting year is from ..... [0]1] [8]8] to [1]2] [8]8]

Mo. Year Mo. Year

[ ] Mark (X) this box if you attach a continuation sheet.

1.14 Facility Acquired -- If you purchased this facility during the reporting year, provide the following information about the seller:

CBI Name of Seller [__]

[__] Mailing Address [__]
Street

[__]
City

N/A [__]__] [__]__]__]__]__]--[__]__]__]__]
State Zip

Employer ID Number .....[__]__]__]__]__]__]__]__]__]

Date of Sale .....[__]__] [__]__] [__]__]
Mo. Day Year

Contact Person [__]

Telephone Number .....[__]__]__]-[__]__]__]-[__]__]__]__]

1.15 Facility Sold -- If you sold this facility during the reporting year, provide the following information about the buyer:

CBI Name of Buyer [__]

[__] Mailing Address [__]
Street

[__]
City

N/A [__]__] [__]__]__]__]__]--[__]__]__]__]
State Zip

Employer ID Number .....[__]__]__]__]__]__]__]__]__]

Date of Purchase .....[__]__] [__]__] [__]__]
Mo. Day Year

Contact Person [__]

Telephone Number .....[__]__]__]-[__]__]__]-[__]__]__]__]

[__] Mark (X) this box if you attach a continuation sheet.

1.16 For each classification listed below, state the quantity of the listed substance that was manufactured, imported, or processed at your facility during the reporting year.

CBI
[__]

Classification	Quantity (kg/yr)
Manufactured	N/A
Imported	N/A
Processed (include quantity repackaged)	1, 209,263
Of that quantity manufactured or imported, report that quantity:	
In storage at the beginning of the reporting year	N/A
For on-site use or processing	N/A
For direct commercial distribution (including export)	N/A
In storage at the end of the reporting year	N/A
Of that quantity processed, report that quantity:	
In storage at the beginning of the reporting year	91,409
Processed as a reactant (chemical producer)	-
Processed as a formulation component (mixture producer)	1, 209,263
Processed as an article component (article producer)	-
Repackaged (including export)	-
In storage at the end of the reporting year	114,108

[__] Mark (X) this box if you attach a continuation sheet.

PART C IDENTIFICATION OF MIXTURES

1.17 Mixture -- If the listed substance on which you are required to report is a mixture or a component of a mixture, provide the following information for each component chemical. (If the mixture composition is variable, report an average percentage of each component chemical for all formulations.)

CBI

[ ]

Component Name	Supplier Name	Average % Composition by Weight (specify precision, e.g., 45% ± 0.5%)
N / A	N / A	N / A
		Total 100%

[ ] Mark (X) this box if you attach a continuation sheet.

2.04 State the quantity of the listed substance that your facility manufactured, imported, or processed during the 3 corporate fiscal years preceding the reporting year in descending order.

CBI

[ ] Year ending ..... [1][2] [8][7]
Mo. Year

Quantity manufactured ..... N/A kg

Quantity imported ..... N/A kg

Quantity processed ..... 792,864 kg

Year ending ..... [1][2] [8][6]
Mo. Year

Quantity manufactured ..... N/A kg

Quantity imported ..... N/A kg

Quantity processed ..... 0 kg

Year ending ..... [1][2] [8][5]
Mo. Year

Quantity manufactured ..... N/A kg

Quantity imported ..... N/A kg

Quantity processed ..... 0 kg

2.05 Specify the manner in which you manufactured the listed substance. Circle all appropriate process types.

CBI

[ ]

Continuous process ..... N/A 1

Semicontinuous process ..... N/A 2

Batch process ..... N/A 3

[ ] Mark (X) this box if you attach a continuation sheet.

2.06 Specify the manner in which you processed the listed substance. Circle all appropriate process types.

CBI

[__]

Continuous process 1

Semicontinuous process 2

Batch process ..... (3)

2.07 State your facility's name-plate capacity for manufacturing or processing the listed substance. (If you are a batch manufacturer or batch processor, do not answer this question.)

CBI

[__]

Manufacturing capacity ..... N/A kg/yr

Processing capacity ..... N/A kg/yr

2.08 If you intend to increase or decrease the quantity of the listed substance manufactured, imported, or processed at any time after your current corporate fiscal year, estimate the increase or decrease based upon the reporting year's production volume.

CBI

[__]

	Manufacturing Quantity (kg)	Importing Quantity (kg)	Processing Quantity (kg)
Amount of increase	N/A	N/A	"UK"
Amount of decrease	N/A	N/A	"UK"

[__] Mark (X) this box if you attach a continuation sheet.

2.09 For the three largest volume manufacturing or processing process types involving the listed substance, specify the number of days you manufactured or processed the listed substance during the reporting year. Also specify the average number of hours per day each process type was operated. (If only one or two operations are involved, list those.)

CBI

[__]

	Days/Year	Average Hours/Day
Process Type #1 (The process type involving the largest quantity of the listed substance.)		
Manufactured	N/A	N/A
Processed	184	1.83
Process Type #2 (The process type involving the 2nd largest quantity of the listed substance.)		
Manufactured	N/A	N/A
Processed	N/A	N/A
Process Type #3 (The process type involving the 3rd largest quantity of the listed substance.)		
Manufactured	N/A	N/A
Processed	N/A	N/A

2.10 State the maximum daily inventory and average monthly inventory of the listed substance that was stored on-site during the reporting year in the form of a bulk chemical.

CBI

[__]

Maximum daily inventory ..... _____ kg

Average monthly inventory ..... _____ kg

[__] Mark (X) this box if you attach a continuation sheet.

2.11 Related Product Types -- List any byproducts, coproducts, or impurities present with the listed substance in concentrations greater than 0.1 percent as it is manufactured, imported, or processed. The source of byproducts, coproducts, or impurities means the source from which the byproducts, coproducts, or impurities are made or introduced into the product (e.g., carryover from raw material, reaction product, etc.).

CBI
[ ]

CAS No.	Chemical Name	Byproduct, Coproduct or Impurity[1]	Concentration (%) (specify ± % precision)	Source of Byproducts, Coproducts, or Impurities
26471-62-5	Toluene Diisocyanate	Unknown	Unknown	Unknown

[1]Use the following codes to designate byproduct, coproduct, or impurity:

B = Byproduct
C = Coproduct
I = Impurity

[ ] Mark (X) this box if you attach a continuation sheet.

2.12 Existing Product Types -- List all existing product types which you manufactured, imported, or processed using the listed substance during the reporting year. List the quantity of listed substance you use for each product type as a percentage of the total volume of listed substance used during the reporting year. Also list the quantity of listed substance used captively on-site as a percentage of the value listed under column b., and the types of end-users for each product type. (Refer to the instructions for further explanation and an example.)

CBI
[__]

a. Product Types[1]	b. % of Quantity Manufactured, Imported, or Processed	c. % of Quantity Used Captively On-Site	d. Type of End-Users[2]
B	100%	100%	N/A

[1]Use the following codes to designate product types:

A = Solvent
B = Synthetic reactant
C = Catalyst/Initiator/Accelerator/Sensitizer
D = Inhibitor/Stabilizer/Scavenger/Antioxidant
E = Analytical reagent
F = Chelator/Coagulant/Sequestrant
G = Cleanser/Detergent/Degreaser
H = Lubricant/Friction modifier/Antiwear agent
I = Surfactant/Emulsifier
J = Flame retardant
K = Coating/Binder/Adhesive and additives
L = Moldable/Castable/Rubber and additives
M = Plasticizer
N = Dye/Pigment/Colorant/Ink and additives
O = Photographic/Reprographic chemical and additives
P = Electrodeposition/Plating chemicals
Q = Fuel and fuel additives
R = Explosive chemicals and additives
S = Fragrance/Flavor chemicals
T = Pollution control chemicals
U = Functional fluids and additives
V = Metal alloy and additives
W = Rheological modifier
X = Other (specify) _____

[2]Use the following codes to designate the type of end-users:

I = Industrial
CM = Commercial
CS = Consumer
H = Other (specify) _____

[__] Mark (X) this box if you attach a continuation sheet.

2.13 Expected Product Types -- Identify all product types which you expect to manufacture, import, or process using the listed substance at any time after your current corporate fiscal year. For each use, specify the quantity you expect to manufacture, import, or process for each use as a percentage of the total volume of listed substance used during the reporting year. Also list the quantity of listed substance used captively on-site as a percentage of the value listed under column b., and the types of end-users for each product type. (Refer to the instructions for further explanation and an example.)

CBI
[ ]

a. Product Types[1]	b. % of Quantity Manufactured, Imported, or Processed	c. % of Quantity Used Captively On-Site	d. Type of End-Users[2]
B	100%	100%	N/A

[1]Use the following codes to designate product types:

A = Solvent
B = Synthetic reactant
C = Catalyst/Initiator/Accelerator/Sensitizer
D = Inhibitor/Stabilizer/Scavenger/Antioxidant
E = Analytical reagent
F = Chelator/Coagulant/Sequestrant
G = Cleanser/Detergent/Degreaser
H = Lubricant/Friction modifier/Antiwear agent
I = Surfactant/Emulsifier
J = Flame retardant
K = Coating/Binder/Adhesive and additives
L = Moldable/Castable/Rubber and additives
M = Plasticizer
N = Dye/Pigment/Colorant/Ink and additives
O = Photographic/Reprographic chemical and additives
P = Electrodeposition/Plating chemicals
Q = Fuel and fuel additives
R = Explosive chemicals and additives
S = Fragrance/Flavor chemicals
T = Pollution control chemicals
U = Functional fluids and additives
V = Metal alloy and additives
W = Rheological modifier
X = Other (specify) _____

[2]Use the following codes to designate the type of end-users:

I = Industrial
CM = Commercial
CS = Consumer
H = Other (specify) _____

[ ] Mark (X) this box if you attach a continuation sheet.

2.14 Final Product -- Complete the following table for each type of final product
CBI manufactured, imported, or processed at your facility that contains the listed substance other than as an impurity.

[__]

a. Product Type[1]	b. Final Product's Physical Form[2]	c. Average % Composition of Listed Substance in Final Product	d. Type of End-Users[3]
N/A	N/A	N/A	N/A
N/A	N/A	N/A	N/A
N/A	N/A	N/A	N/A
N/A	N/A	N/A	N/A
N/A	N/A	N/A	N/A

[1]Use the following codes to designate product types:

A = Solvent
B = Synthetic reactant
C = Catalyst/Initiator/Accelerator/Sensitizer
D = Inhibitor/Stabilizer/Scavenger/Antioxidant
E = Analytical reagent
F = Chelator/Coagulant/Sequestrant
G = Cleanser/Detergent/Degreaser
H = Lubricant/Friction modifier/Antiwear agent
I = Surfactant/Emulsifier
J = Flame retardant
K = Coating/Binder/Adhesive and additives
L = Moldable/Castable/Rubber and additives
M = Plasticizer
N = Dye/Pigment/Colorant/Ink and additives
O = Photographic/Reprographic chemical and additives
P = Electrodeposition/Plating chemicals
Q = Fuel and fuel additives
R = Explosive chemicals and additives
S = Fragrance/Flavor chemicals
T = Pollution control chemicals
U = Functional fluids and additives
V = Metal alloy and additives
W = Rheological modifier
X = Other (specify) _____

[2]Use the following codes to designate the final product's physical form:

A = Gas
B = Liquid
C = Aqueous solution
D = Paste
E = Slurry
F1 = Powder
F2 = Crystalline solid
F3 = Granules
F4 = Other solid
G = Gel
H = Other (specify) _____

[3]Use the following codes to designate the type of end-users:

I = Industrial
CM = Commercial
CS = Consumer
H = Other (specify) _____

[__] Mark (X) this box if you attach a continuation sheet.

2.15 Circle all applicable modes of transportation used to deliver bulk shipments of the listed substance to off-site customers.
CBI

[__] Truck ..... N/A 1

Railcar ..... N/A 2

Barge, Vessel ..... N/A 3

Pipeline ..... N/A 4

Plane ..... N/A 5

Other (specify) N/A 6

2.16 Customer Use -- Estimate the quantity of the listed substance used by your customers or prepared by your customers during the reporting year for use under each category of end use listed (i-iv).
CBI

[__]

Category of End Use

i. Industrial Products

Chemical or mixture ..... N/A kg/yr

Article ..... N/A kg/yr

ii. Commercial Products

Chemical or mixture ..... N/A kg/yr

Article ..... N/A kg/yr

iii. Consumer Products

Chemical or mixture ..... N/A kg/yr

Article ..... N/A kg/yr

iv. Other

Distribution (excluding export) ..... N/A kg/yr

Export ..... N/A kg/yr

Quantity of substance consumed as reactant ..... N/A kg/yr

Unknown customer uses ..... N/A kg/yr

[__] Mark (X) this box if you attach a continuation sheet.

SECTION 3 PROCESSOR RAW MATERIAL IDENTIFICATION

PART A GENERAL DATA

3.01 Specify the quantity purchased and the average price paid for the listed substance for each major source of supply listed. Product trades are treated as purchases.
CBI The average price is the market value of the product that was traded for the listed substance.
[__]

Source of Supply	Quantity (kg)	Average Price ($/kg)
The listed substance was manufactured on-site.	N/A	N/A
The listed substance was transferred from a different company site.	N/A	N/A
The listed substance was purchased directly from a manufacturer or importer.	1,253,152	$ 2.51
The listed substance was purchased from a distributor or repackager.	N/A	N/A
The listed substance was purchased from a mixture producer.	N/A	N/A

3.02 Circle all applicable modes of transportation used to deliver the listed substance to your facility.
CBI
[__]

Truck ..... (1)

Railcar ..... (2)

Barge, Vessel 3

Pipeline 4

Plane 5

Other (specify) _____ 6

[__] Mark (X) this box if you attach a continuation sheet.

3.03 a. Circle all applicable containers used to transport the listed substance to your facility.
CBI

[__]

Bags 1

Boxes 2

Free standing tank cylinders 3

Tank rail cars ..... (4)

Hopper cars 5

Tank trucks ..... (6)

Hopper trucks 7

Drums 8

Pipeline 9

Other (specify) _____ 10

b. If the listed substance is transported in pressurized tank cylinders, tank rail cars, or tank trucks, state the pressure of the tanks.

Tank cylinders ..... "UK" mmHg

Tank rail cars ..... "UK" mmHg

Tank trucks ..... "UK" mmHg

[__] Mark (X) this box if you attach a continuation sheet.

PART B RAW MATERIAL IN THE FORM OF A MIXTURE

3.04 If you obtain the listed substance in the form of a mixture, list the trade name(s) of the mixture, the name of its supplier(s) or manufacturer(s), an estimate of the average percent composition by weight of the listed substance in the mixture, and the amount of mixture processed during the reporting year.

CBI

[ ]

Trade Name	Supplier or Manufacturer	Average % Composition by Weight (specify ± % precision)	Amount Processed (kg/yr)
N/A	N/A	N/A	N/A
N/A	N/A	N/A	N/A
N/A	N/A	N/A	N/A
N/A	N/A	N/A	N/A

[ ] Mark (X) this box if you attach a continuation sheet.

PART C RAW MATERIAL VOLUME

3.05 CBI [ ] State the quantity of the listed substance used as a raw material during the reporting year in the form of a class I chemical, class II chemical, or polymer, and the percent composition, by weight, of the listed substance.

	Quantity Used (kg/yr)	% Composition by Weight of Listed Substance in Raw Material (specify ± % precision)
Class I chemical	1,209,263	100%
Class II chemical	N/A	N/A
Polymer	N/A	N/A

[ ] Mark (X) this box if you attach a continuation sheet.

SECTION 4 PHYSICAL/CHEMICAL PROPERTIES

General Instructions:

If you are reporting on a mixture as defined in the glossary, reply to questions in Section 4 that are inappropriate to mixtures by stating "NA -- mixture."

For questions 4.06-4.15, if you possess any hazard warning statement, label, MSDS, or other notice that addresses the information requested, you may submit a copy or reasonable facsimile in lieu of answering those questions which it addresses.

PART A PHYSICAL/CHEMICAL DATA SUMMARY

4.01 Specify the percent purity for the three major[1] technical grade(s) of the listed substance as it is manufactured, imported, or processed. Measure the purity of the substance in the final product form for manufacturing activities, at the time you import the substance, or at the point you begin to process the substance.

CBI [ ]

	Manufacture	Import	Process
Technical grade #1	_____ % purity	_____ % purity	99.9 % purity
Technical grade #2	_____ % purity	_____ % purity	N/A % purity
Technical grade #3	_____ % purity	_____ % purity	N/A % purity

[1]Major = Greatest quantity of listed substance manufactured, imported or processed.

4.02 Submit your most recently updated Material Safety Data Sheet (MSDS) for the listed substance, and for every formulation containing the listed substance. If you possess an MSDS that you developed and an MSDS developed by a different source, submit your version. Indicate whether at least one MSDS has been submitted by circling the appropriate response.

Yes ..... (1)

No 2

Indicate whether the MSDS was developed by your company or by a different source.

Your company 1

Another source ..... (2)

[X] Mark (X) this box if you attach a continuation sheet.

4.03 Submit a copy or reasonable facsimile of any hazard information (other than an MSDS) that is provided to your customers/users regarding the listed substance or any formulation containing the listed substance. Indicate whether this information has been submitted by circling the appropriate response.

Yes ..... N/A 1

No ..... N/A 2

4.04 For each activity that uses the listed substance, circle all the applicable number(s) corresponding to each physical state of the listed substance during the activity listed. Physical states for importing and processing activities are determined at the time you import or begin to process the listed substance. Physical states for manufacturing, storage, disposal and transport activities are determined using the final state of the product.

CBI

[ ]

	Physical State				
Activity	Solid	Slurry	Liquid	Liquified Gas	Gas
Manufacture	1	2	3	4	5
Import	1	2	3	4	5
Process	1	2	3	4	5
Store	1	2	3	4	5
Dispose	1	2	3	4	5
Transport	1	2	3	4	5

[ ] Mark (X) this box if you attach a continuation sheet.

4.05 Particle Size -- If the listed substance exists in particulate form during any of the following activities, indicate for each applicable physical state the size and the percentage distribution of the listed substance by activity. Do not include particles ≥10 microns in diameter. Measure the physical state and particle sizes for importing and processing activities at the time you import or begin to process the listed substance. Measure the physical state and particle sizes for manufacturing storage, disposal and transport activities using the final state of the product.

CBI
[__]

Physical State		Manufacture	Import	Process	Store	Dispose	Transport
Dust	<1 micron	N/A	N/A	N / A	N / A	N/A	N/A
	1 to <5 microns						
	5 to <10 microns						
Powder	<1 micron						
	1 to <5 microns						
	5 to <10 microns						
Fiber	<1 micron						
	1 to <5 microns						
	5 to <10 microns						
Aerosol	<1 micron						
	1 to <5 microns						
	5 to <10 microns						

[__] Mark (X) this box if you attach a continuation sheet.

SECTION 5 ENVIRONMENTAL FATE

PART A RATE CONSTANTS AND TRANSFORMATION PRODUCTS

5.01 Indicate the rate constants for the following transformation processes.

a. Photolysis:

Absorption spectrum coefficient (peak) .... Unknown (1/M cm) at _____ nm

Reaction quantum yield, ϕ ..... Unknown at _____ nm

Direct photolysis rate constant, k_p, at ... Unknown 1/hr _____ latitude

b. Oxidation constants at 25°C:

For $^1O_2$ (singlet oxygen), k_{ox} ..... Unknown 1/M hr

For RO_2 (peroxy radical), k_{ox} ..... Unknown 1/M hr

c. Five-day biochemical oxygen demand, BOD_5 ... Unknown mg/l

d. Biotransformation rate constant:

For bacterial transformation in water, k_b... Unknown 1/hr

Specify culture ..... Unknown

e. Hydrolysis rate constants:

For base-promoted process, k_B ..... Unknown 1/M hr

For acid-promoted process, k_A ..... Unknown 1/M hr

For neutral process, k_N ..... Unknown 1/hr

f. Chemical reduction rate (specify conditions) Unknown

Unknown

g. Other (such as spontaneous degradation) ... Unknown

Unknown

[__] Mark (X) this box if you attach a continuation sheet.

PART B PARTITION COEFFICIENTS

5.02 a. Specify the half-life of the listed substance in the following media.

Media	Half-life (specify units)
Groundwater	"UK"
Atmosphere	"UK"
Surface water	"UK"
Soil	"UK"

b. Identify the listed substance's known transformation products that have a half-life greater than 24 hours.

CAS No.	Name	Half-life (specify units)		Media
"UK"	"UK"	"UK"	in	"UK"
"UK"	"UK"	"UK"	in	"UK"
"UK"	"UK"	"UK"	in	"UK"
"UK"	"UK"	"UK"	in	"UK"

5.03 Specify the octanol-water partition coefficient, K_{ow} ... "UK" at 25°C

Method of calculation or determination ..... "UK"

5.04 Specify the soil-water partition coefficient, K_d ..... "UK" at 25°C

Soil type ..... "UK"

5.05 Specify the organic carbon-water partition coefficient, K_{oc} ..... "UK" at 25°C

5.06 Specify the Henry's Law Constant, H ..... "UK" atm-m^3/mole

[ ] Mark (X) this box if you attach a continuation sheet.

5.07 List the bioconcentration factor (BCF) of the listed substance, the species for which it was determined, and the type of test used in deriving the BCF.

Bioconcentration Factor	Species	Test[1]
"UK"	"UK"	"UK"
"UK"	"UK"	"UK"
"UK"	"UK"	"UK"

[1]Use the following codes to designate the type of test:

F = Flowthrough
S = Static

[__] Mark (X) this box if you attach a continuation sheet.

6.04 For each market listed below, state the quantity sold and the total sales value of the listed substance sold or transferred in bulk during the reporting year.

CBI

[ ]

Market	Quantity Sold or Transferred (kg/yr)	Total Sales Value ($/yr)
Retail sales		
Distribution -- Wholesalers		
Distribution -- Retailers		
Intra-company transfer		
Repackagers		
Mixture producers		
Article producers		
Other chemical manufacturers or processors		
Exporters		
Other (specify)		

6.05 Substitutes -- List all known commercially feasible substitutes that you know exist for the listed substance and state the cost of each substitute. A commercially feasible substitute is one which is economically and technologically feasible to use in your current operation, and which results in a final product with comparable performance in its end uses.

CBI

[ ]

Substitute	Cost ($/kg)
Unknown	Unknown

[ ] Mark (X) this box if you attach a continuation sheet.

SECTION 7 MANUFACTURING AND PROCESSING INFORMATION

General Instructions:

For questions 7.04-7.06, provide a separate response for each process block flow diagram provided in questions 7.01, 7.02, and 7.03. Identify the process type from which the information is extracted.

PART A MANUFACTURING AND PROCESSING PROCESS TYPE DESCRIPTION

7.01 In accordance with the instructions, provide a process block flow diagram showing the major (greatest volume) process type involving the listed substance.

CBI

[ ] Process type ..... Flexible Slabstock Polyurethane Foam Mfg. Process

[X] Mark (X) this box if you attach a continuation sheet.

7.03 In accordance with the instructions, provide a process block flow diagram showing all process emission streams and emission points that contain the listed substance and which, if combined, would total at least 90 percent of all facility emissions if not treated before emission into the environment. If all such emissions are released from one process type, provide a process block flow diagram using the instructions for question 7.01. If all such emissions are released from more than one process type, provide a process block flow diagram showing each process type as a separate block.

CBI

[ ] Process type ..... Flexible Slabstock Polyurethane Foam Mfg. Process

[XX] Mark (X) this box if you attach a continuation sheet.

7.04 Describe the typical equipment types for each unit operation identified in your process block flov diagram(s). If a process block flov diagram is provided for more than one process type, photocopy this question and complete it separately for each process type.

CBI

[ ] Process type ..... Flexible Slabstock Polyurethane Foam Mfg. Process

Unit Operation ID Number	Typical Equipment Type	Operating Temperature Range (°C)	Operating Pressure Range (mm Hg)	Vessel Composition
	Reference Continuation Sheets 45A & 45B			

[XX] Mark (X) this box if you attach a continuation sheet.

7.05 Describe each process stream identified in your process block flow diagram(s). If a process block flow diagram is provided for more than one process type, photocopy this question and complete it separately for each process type.

CBI

[ ] Process type ..... Flexible Slabstock Polyurethane Foam Mfg. Process

Process Stream ID Code	Process Stream Description	Physical State[1]	Stream Flow (kg/yr)
7G, 7L, 7M, 7N, 7O	PVC	SO	393,812
7G, 7L, 7M, 7N, 7O	Antimony Trioxide	SO	78,786
7A, 7B, 7C, 7D, 7E 7F, 7L, 7M, 7N, 7O	Polyol	OL	2,715,502
7U	Silicone	OL	18,128
7Q	Water	AL	89,612
7R	Color	OL	1,296
7V	17R-2	OL	26,254
7S	Amine	OL	8,322
7DD, 7EE, 7HH, 7II 7JJ, 7KK, 7LL, 7MM	TDI	OL	1,209,263
7RR, 7NN, 7PP	Polyurethane Foam	SO	4,552,505
7T	TIN	OL	7,538
7W, 7X, 7Y, 7Z, 7AA	Freon	OL	3,992

[1]Use the following codes to designate the physical state for each process stream:

GC = Gas (condensible at ambient temperature and pressure)
GU = Gas (uncondensible at ambient temperature and pressure)
SO = Solid
SY = Sludge or slurry
AL = Aqueous liquid
OL = Organic liquid
IL = Immiscible liquid (specify phases, e.g., 90% water, 10% toluene)

[ ] Mark (X) this box if you attach a continuation sheet.

7.06 Characterize each process stream identified in your process block flow diagram(s). If a process block flow diagram is provided for more than one process type, photocopy this question and complete it separately for each process type. (Refer to the instructions for further explanation and an example.)

CBI

[ ] Process type ..... Flexible Slabstock Polyurethane Foam Mfg. Process

a. Process Stream ID Code	b. Known Compounds[1]	c. Concentrations[2,3] (% or ppm)	d. Other Expected Compounds	e. Estimated Concentrations (% or ppm)
7L, 7M, 7N 7G ,7O	PVC	100%	Unknown	Unknown
7N, 7O 7G, 7L, 7M,	Antimony Trioxide	100%	Unknown	Unknown
7N, 7M,7B, 7C, 7D 7O, 7E, 7A ,7F, 7L	Polyol	100%	Unknown	Unknown
7Q	Water	100%	Unknown	Unknown
7R	Color	100%	Unknown	Unknown
7S	Amine Catalyst	100%	Unknown	Unknown
	Amine Catalyst	TEDA-20% DMEA-80%	Unknown	Unknown
7T	Tin Catalyst	50% SNOCT	DOP	50%
7U	Silicone	100%	Unknown	Unknown
7V	17R-2	100%	Unknown	Unknown
7W,7X,7Y, 7Z, 7AA	Freon	100%	Unknown	Unknown
7DD,7EE, 7HH, 7II, 7JJ, 7KK,7MM 7LL	TDI	99.9%	Hydrolyzable Chloride	0.1%
7RR,7NN 7PP	Polyurethane Foam	100%	N/A	N/A

7.06 continued below

[ ] Mark (X) this box if you attach a continuation sheet.

7.06 (continued)

[1]For each additive package introduced into a process stream, specify the compounds that are present in each additive package, and the concentration of each component. Assign an additive package number to each additive package and list this number in column b. (Refer to the instructions for further explanation and an example. Refer to the glossary for the definition of additive package.)

Additive Package Number	Components of Additive Package	Concentrations (% or ppm)
7L,7M,7N, 70 1 7G	PVC	8.88%
7G, 7L, 7M, 7N, 70	Antimony Trioxide	1.78%
2		
3		
4		
5		

[2]Use the following codes to designate how the concentration was determined:

A = Analytical result
E = Engineering judgement/calculation

[3]Use the following codes to designate how the concentration was measured:

V = Volume
W = Weight

[ ] Mark (X) this box if you attach a continuation sheet.

SECTION 8 RESIDUAL TREATMENT GENERATION, CHARACTERIZATION, TRANSPORTATION, AND MANAGEMENT

General Instructions:

For questions 8.04-8.06, provide a separate response for each residual treatment block flow diagram provided in question 8.01, 8.02 or 8.03. Identify the process type from which the information is extracted.

For questions 8.05-8.33, the Stream Identification Codes are those process streams listed in either the Section 7 or Section 8 block flow diagrams which contain residuals for each applicable waste management method.

For questions 8.07-8.33, if residuals are combined before they are handled, list those Stream Identification Codes on the same line.

Questions 8.09-8.33 refer to the waste management activities involving the residuals identified in either the Section 7 or Section 8 block flow diagrams. Not all Stream Identification Codes used in the sample answers (e.g., for the incinerator questions) have corresponding process streams identified in the block flow diagram(s). These Stream Identification codes are for illustrative purposes only.

For questions 8.11-8.33, if you have provided the information requested on one of the EPA Office of Solid Waste surveys listed below within the three years prior to your reporting year, you may submit a copy or reasonable facsimile in lieu of answering those questions which the survey addresses. The applicable surveys are: (1) Hazardous Waste Treatment, Storage, Disposal, and Recycling Survey; (2) Hazardous Waste Generator Survey; or (3) Subtitle D Industrial Facility Mail Survey.

[__] Mark (X) this box if you attach a continuation sheet.

PART A RESIDUAL TREATMENT PROCESS DESCRIPTION

8.01 In accordance with the instructions, provide a residual treatment block flow diagram which describes the treatment process used for residuals identified in question 7.01.

CBI

[ ] Process type ..... Flexible Slabstock Polyurethane Foam Mfg. Process

[XX] Mark (X) this box if you attach a continuation sheet.

PART B RESIDUAL GENERATION AND CHARACTERIZATION

8.05 Characterize each process stream identified in your residual treatment block flow diagram(s). If a residual treatment block flow diagram is provided for more than one process type, photocopy this question and complete it separately for each process type. (Refer to the instructions for further explanation and an example.)

CBI

[ ] Process type ..... Flexible Slabstock Polyurethane Foam Mfg. Process

a. Stream ID Code	b. Type of Hazardous Waste[1]	c. Physical State of Residual[2]	d. Known Compounds[3]	e. Concentrations (% or ppm)[4,5,6]	f. Other Expected Compounds	g. Estimated Concentrations (% or ppm)
8A	T	OL	Meth. Chloride	80%	Unknown	Unknown
			Polyol	13%	Unknown	Unknown
			Water	0.5%	Unknown	Unknown
			PVC	5%	Unknown	Unknown
			Antimony	1%	Unknown	Unknown
8B	T	OL	Meth. Chloride	80%	Unknown	Unknown
			Polyol	13%	Unknown	Unknown
			Water	0.5%	Unknown	Unknown
			PVC	5%	Unknown	Unknown
			Antimony	1%	Unknown	Unknown
8A	T	SY	Cured Urethane	84%	Silicone	0.2%
			Meth. Chloride	6%	Amine	0.05%
			Polyol	10%	Tin	0.1%

8.05 continued below

[ ] Mark (X) this box if you attach a continuation sheet.

8.05 (continued)

[1]Use the following codes to designate the type of hazardous waste:

I = Ignitable
C = Corrosive
R = Reactive
E = EP toxic
T = Toxic
H = Acutely hazardous

[2]Use the following codes to designate the physical state of the residual:

GC = Gas (condensible at ambient temperature and pressure)
GU = Gas (uncondensible at ambient temperature and pressure)
SO = Solid
SY = Sludge or slurry
AL = Aqueous liquid
OL = Organic liquid
IL = Immiscible liquid (specify phases, e.g., 90% water, 10% toluene)

8.05 continued below

[__] Mark (X) this box if you attach a continuation sheet.

8.05 (continued)

[3]For each additive package introduced into a process stream, specify the compounds that are present in each additive package, and the concentration of each component. Assign an additive package number to each additive package and list this number in column d. (Refer to the instructions for further explanation and an example. Refer to the glossary for the definition of additive package.)

Additive Package Number	Components of Additive Package	Concentrations (% or ppm)
1 7G	PVC	8.88% (E)
	ANTIMONY TRIOXIDE	1.78% (E)
2		
3		
4		
5		

[4]Use the following codes to designate how the concentration was determined:

A = Analytical result
E = Engineering judgement/calculation

8.05 continued below

[ ] Mark (X) this box if you attach a continuation sheet.

8.06 Characterize each process stream identified in your residual treatment block flow diagram(s). If a residual treatment block flow diagram is provided for more than one process type, photocopy this question and complete it separately for each process type. (Refer to the instructions for further explanation and an example.)

CBI

[ ] Process type ..... Flexible Slabstock Polyurethane Foam Mfg. Process

a. Stream ID Code	b. Waste Description Code[1]	c. Management Method Code[2]	d. Residual Quantities (kg/yr)	e. Management of Residual (%) On-Site	e. Management of Residual (%) Off-Site	f. Costs for Off-Site Management (per kg)	g. Changes in Management Methods
8A	A04	11I	2434	N/A	100%	$1.65	N/A
8A	A03	11A	1100	N/A	100%	$1.18	N/A
8B	N/A	N/A	N/A	N/A	N/A	N/A	N/A
7CC	N/A	M-5	Unknown	N/A	N/A	N/A	N/A
7GG	N/A	M-5	Unknown	N/A	N/A	N/A	N/A
7OO	N/A	M-5	7.91	N/A	N/A	N/A	N/A
7QQ	N/A	M-5	Unknown	N/A	N/A	N/A	N/A
7SS	N/A	M-5	Unknown	N/A	N/A	N/A	N/A
7UU	N/A	M-5	Unknown	N/A	N/A	N/A	N/A
7XX	N/A	M-5	Unknown	N/A	N/A	N/A	N/A
7ZZ	N/A	M-5	Unknown	N/A	N/A	N/A	N/A
7CCC	N/A	M-5	Unknown	N/A	N/A	N/A	N/A

[1] Use the codes provided in Exhibit 8-1 to designate the waste descriptions

[2] Use the codes provided in Exhibit 8-2 to designate the management methods

[ ] Mark (X) this box if you attach a continuation sheet.

8.05 (continued)

[5]Use the following codes to designate how the concentration was measured:

V = Volume
W = Weight

[6]Specify the analytical test methods used and their detection limits in the table below. Assign a code to each test method used and list those codes in column e.

Code	Method	Detection Limit (± ug/l)
1	N / A	N/A
2	N/A	N/A
3	N/A	N/A
4	N/A	N/A
5	N/A	N/A
6	N/A	N/A

[ ] Mark (X) this box if you attach a continuation sheet.

EXHIBIT 8-1.
(Refers to question 8.06(b))

WASTE DESCRIPTION CODES

These waste description codes were developed specifically for this survey to supplement the descriptions listed with the RCRA and other waste codes. (These waste description codes are not regulatory definitions.)

WASTE DESCRIPTION CODES FOR HAZARDOUS WASTE DESCRIBED BY A SINGLE RCRA F, K, P, OR U WASTE CODE

A01 Spent solvent (F001-F005, K086)
A02 Other organic liquid (F001-F005, K086)
A03 Still bottom (F001-F005, K086)
A04 Other organic sludge (F001-F005, K086)
A05 Wastewater or aqueous mixture
A06 Contaminated soil or cleanup residue
A07 Other F or K waste, exactly as described*
A08 Concentrated off-spec or discarded product
A09 Empty containers
A10 Incinerator ash
A11 Solidified treatment residue
A12 Other treatment residue (specify in "Facility Notes")
A13 Other untreated waste (specify in "Facility Notes")

*"Exactly as described" means that the waste matches the description of the RCRA waste code.

INORGANIC LIQUIDS—Waste that is primarily inorganic and highly fluid (e.g., aqueous), with low suspended inorganic solids and low organic content.

B01 Aqueous waste with low solvents
B02 Aqueous waste with low other toxic organics
B03 Spent acid with metals
B04 Spent acid without metals
B05 Acidic aqueous waste
B06 Caustic solution with metals but no cyanides
B07 Caustic solution with metals and cyanides
B08 Caustic solution with cyanides but no metals
B09 Spent caustic
B10 Caustic aqueous waste
B11 Aqueous waste with reactive sulfides
B12 Aqueous waste with other reactives (e.g., explosives)
B13 Other aqueous waste with high dissolved solids
B14 Other aqueous waste with low dissolved solids
B15 Scrubber water
B16 Leachate
B17 Waste liquid mercury
B18 Other inorganic liquid (specify in "Facility Notes")

INORGANIC SLUDGES—Waste that is primarily inorganic, with moderate-to-high water content and low organic content; pumpable.

B19 Lime sludge without metals
B20 Lime sludge with metals/metal hydroxide sludge
B21 Wastewater treatment sludge with toxic organics
B22 Other wastewater treatment sludge
B23 Untreated plating sludge without cyanides
B24 Untreated plating sludge with cyanides
B25 Other sludge with cyanides
B26 Sludge with reactive sulfides
B27 Sludge with other reactives
B28 Degreasing sludge with metal scale or filings
B29 Air pollution control device sludge (e.g., fly ash, wet scrubber sludge)
B30 Sediment or lagoon dragout contaminated with organics
B31 Sediment or lagoon dragout contaminated with inorganics only
B32 Drilling mud
B33 Asbestos slurry or sludge
B34 Chloride or other brine sludge
B35 Other inorganic sludge (specify in "Facility Notes")

INORGANIC SOLIDS—Waste that is primarily inorganic and solid, with low organic content and low-to-moderate water content; not pumpable.

B36 Soil contaminated with organics
B37 Soil contaminated with inorganics only
B38 Ash, slag, or other residue from incineration of wastes
B39 Other "dry" ash, slag, or thermal residue
B40 "Dry" lime or metal hydroxide solids chemically "fixed"
B41 "Dry" lime or metal hydroxide solids not "fixed"
B42 Metal scale, filings, or scrap
B43 Empty or crushed metal drums or containers
B44 Batteries or battery parts, casings, cores
B45 Spent solid filters or adsorbents
B46 Asbestos solids and debris
B47 Metal-cyanide salts/chemicals
B48 Reactive cyanide salts/chemicals
B49 Reactive sulfide salts/chemicals
B50 Other reactive salts/chemicals
B51 Other metal salts/chemicals
B52 Other waste inorganic chemicals
B53 Lab packs of old chemicals only
B54 Lab packs of debris only
B55 Mixed lab packs
B56 Other inorganic solids (specify in "Facility Notes")

INORGANIC GASES—Waste that is primarily inorganic with a low organic content and is a gas at atmospheric pressure.

B57 Inorganic gases

ORGANIC LIQUIDS—Waste that is primarily organic and is highly fluid, with low inorganic solids content and low-to-moderate water content.

B58 Concentrated solvent-water solution
B59 Halogenated (e.g., chlorinated) solvent
B60 Nonhalogenated solvent
B61 Halogenated/nonhalogenated solvent mixture
B62 Oil-water emulsion or mixture
B63 Waste oil
B64 Concentrated aqueous solution of other organics
B65 Concentrated phenolics
B66 Organic paint, ink, lacquer, or varnish
B67 Adhesives or expoxies
B68 Paint thinner or petroleum distillates
B69 Reactive or polymerizable organic liquid
B70 Other organic liquid (specify in "Facility Notes")

ORGANIC SLUDGES—Waste that is primarily organic, with low-to-moderate inorganic solids content and water content; pumpable.

B71 Still bottoms of halogenated (e.g., chlorinated) solvents or other organic liquids
B72 Still bottoms of nonhalogenated solvents or other organic liquids
B73 Oily sludge
B74 Organic paint or ink sludge
B75 Reactive or polymerizable organics
B76 Resins, tars, or tarry sludge
B77 Biological treatment sludge
B78 Sewage or other untreated biological sludge
B79 Other organic sludge (specify in "Facility Notes")

ORGANIC SOLIDS—Waste that is primarily organic and solid, with low-to-moderate inorganic content and water content; not pumpable.

B80 Halogenated pesticide solid
B81 Nonhalogenated pesticide solid
B82 Solid resins or polymerized organics
B83 Spent carbon
B84 Reactive organic solid
B85 Empty fiber or plastic containers
B86 Lab packs of old chemicals only
B87 Lab packs of debris only
B88 Mixed lab packs
B89 Other halogenated organic solid
B90 Other nonhalogenated organic solid

ORGANIC GASES—Waste that is primarily organic with low-to-moderate inorganic content and is a gas at atmospheric pressure.

B91 Organic gases

EXHIBIT 8-2.
(Refers to question 8.06(c))

MANAGEMENT METHODS

M1 = Discharge to publicly owned wastewater treatment works
M2 = Discharge to surface water under NPDES
M3 = Discharge to off-site, privately owned wastewater treatment works
M4 = Scrubber: a) caustic; b) water; c) other
M5 = Vent to: a) atmosphere; b) flare; c) other (specify)_____
M6 = Other (specify)_____

TREATMENT AND RECYCLING

Incineration/thermal treatment
1I Liquid injection
2I Rotary or rocking kiln
3I Rotary kiln with a liquid injection unit
4I Two stage
5I Fixed hearth
6I Multiple hearth
7I Fluidized bed
8I Infrared
9I Fume/vapor
10I Pyrolytic destructor
11I Other incineration/thermal treatment

Reuse as fuel
1RF Cement kiln
2RF Aggregate kiln
3RF Asphalt kiln
4RF Other kiln
5RF Blast furnace
6RF Sulfur recovery furnace
7RF Smelting, melting, or refining furnace
8RF Coke oven
9RF Other industrial furnace
10RF Industrial boiler
11RF Utility boiler
12RF Process heater
13RF Other reuse as fuel unit

Fuel Blending
1FB Fuel blending

Solidification
1S Cement or cement/silicate processes
2S Pozzolanic processes
3S Asphaltic processes
4S Thermoplastic techniques
5S Organic polymer techniques
6S Jacketing (macro-encapsulation)
7S Other solidification

Recovery of solvents and liquid organics for reuse
1SR Fractionation
2SR Batch still distillation
3SR Solvent extraction
4SR Thin-film evaporation
5SR Filtration
6SR Phase separation
7SR Dessication
8SR Other solvent recovery

Recovery of metals
1MR Activated carbon (for metals recovery)
2MR Electrodialysis (for metals recovery)
3MR Electrolytic metal recovery
4MR Ion exchange (for metals recovery)
5MR Reverse osmosis (for metals recovery)
6MR Solvent extraction (for metals recovery)
7MR Ultrafiltration (for metals recovery)
8MR Other metals recovery

Wastewater Treatment
After each wastewater treatment type listed below (1WT - 66WT) specify a) tank; or b) surface impoundment (i.e., 63WTa)

Equalization
1WT Equalization

Cyanide oxidation
2WT Alkaline chlorination
3WT Ozone
4WT Electrochemical
5WT Other cyanide oxidation

General oxidation (including disinfection)
6WT Chlorination
7WT Ozonation
8WT UV radiation
9WT Other general oxidation

Chemical precipitation[1]
10WT Lime
11WT Sodium hydroxide
12WT Soda ash
13WT Sulfide
14WT Other chemical precipitation

Chromium reduction
15WT Sodium bisulfite
16WT Sulfur dioxide

EXHIBIT 8-2. (continued)

MANAGEMENT METHODS

17WT Ferrous sulfate
18WT Other chromium reduction

Complexed metals treatment (other than chemical precipitation by pH adjustment)
19WT Complexed metals treatment

Emulsion breaking
20WT Thermal
21WT Chemical
22WT Other emulsion breaking

Adsorption
23WT Carbon adsorption
24WT Ion exchange
25WT Resin adsorption
26WT Other adsorption

Stripping
27WT Air stripping
28WT Steam stripping
29WT Other stripping

Evaporation
30WT Thermal
31WT Solar
32WT Vapor recompression
33WT Other evaporation

Filtration
34WT Diatomaceous earth
35WT Sand
36WT Multimedia
37WT Other filtration

Sludge dewatering
38WT Gravity thickening
39WT Vacuum filtration
40WT Pressure filtration (belt, plate and frame, or leaf)
41WT Centrifuge
42WT Other sludge dewatering

Air flotation
43WT Dissolved air flotation
44WT Partial aeration
45WT Air dispersion
46WT Other air flotation

Oil skimming
47WT Gravity separation
48WT Coalescing plate separation
49WT Other oil skimming

Other liquid phase separation
50WT Decanting
51WT Other liquid phase separation

Biological treatment
52WT Activated sludge
53WT Fixed film-trickling filter
54WT Fixed film-rotating contactor
55WT Lagoon or basin, aerated
56WT Lagoon, facultative
57WT Anaerobic
58WT Other biological treatment

Other wastewater treatment
59WT Wet air oxidation
60WT Neutralization
61WT Nitrification
62WT Denitrification
63WT Flocculation and/or coagulation
64WT Settling (clarification)
65WT Reverse osmosis
66WT Other wastewater treatment

OTHER WASTE TREATMENT

1TR Other treatment
2TR Other recovery for reuse

ACCUMULATION

1A Containers
2A Tanks

STORAGE

1ST Container (i.e., barrel, drum)
2ST Tank
3ST Waste pile
4ST Surface impoundment
5ST Other storage

DISPOSAL

1D Landfill
2D Land treatment
3D Surface impoundment (to be closed as a landfill)
4D Underground injection well

---

[1]Chemical precipitation is a treatment operation whereby the pH of a waste is adjusted to the range necessary for removal (precipitation) of contaminants. However, if the pH is adjusted solely to achieve a neutral pH, THE OPERATION SHOULD BE CONSIDERED NEUTRALIZATION (60WT).

8.22 Describe the combustion chamber design parameters for each of the three largest (by capacity) incinerators that are used on-site to burn the residuals identified in your process block or residual treatment block flow diagram(s).

CBI

[__]

Incinerator	Combustion Chamber Temperature (°C)		Location of Temperature Monitor		Residence Time In Combustion Chamber (seconds)	
	Primary	Secondary	Primary	Secondary	Primary	Secondary
1						
2						
3						

Indicate if Office of Solid Waste survey has been submitted in lieu of response by circling the appropriate response.

Yes 1

No 2

8.23 Complete the following table for the three largest (by capacity) incinerators that are used on-site to burn the residuals identified in your process block or residual treatment block flow diagram(s).

CBI

[__]

Incinerator	Air Pollution Control Device[1]	Types of Emissions Data Available
1	N/A	N/A
2	N/A	N/A
3	N/A	N/A

Indicate if Office of Solid Waste survey has been submitted in lieu of response by circling the appropriate response.

Yes 1

No 2

[1]Use the following codes to designate the air pollution control device:

S = Scrubber (include type of scrubber in parenthesis)
E = Electrostatic precipitator
O = Other (specify) _____

[__] Mark (X) this box if you attach a continuation sheet.

SECTION 9 WORKER EXPOSURE

General Instructions:

Questions 9.03-9.25 apply only to those processes and workers involved in manufacturing or processing the listed substance. Do not include workers involved in residual waste treatment unless they are involved in this treatment process on a regular basis (i.e., exclude maintenance workers, construction workers, etc.).

[ ] Mark (X) this box if you attach a continuation sheet.

PART A EMPLOYMENT AND POTENTIAL EXPOSURE PROFILE

9.01 Mark (X) the appropriate column to indicate whether your company maintains records on the following data elements for hourly and salaried workers. Specify for each data element the year in which you began maintaining records and the number of years the records for that data element are maintained. (Refer to the instructions for further explanation and an example.)

CBI

[ ]

Data Element	Data are Maintained for: Hourly Workers	Salaried Workers	Year in Which Data Collection Began	Number of Years Records Are Maintained
Date of hire	X	X	1987	3 +
Age at hire	X	X	1987	3 +
Work history of individual before employment at your facility	X	X	1987	3 +
Sex	X	X	1987	3 +
Race	X	X	1987	3 +
Job titles	X	X	1987	3 +
Start date for each job title	X	X	1987	3 +
End date for each job title	X	X	1987	3 +
Work area industrial hygiene monitoring data	X	X	1987	30
Personal employee monitoring data	X	X	1987	30
Employee medical history	X	X	1987	30
Employee smoking history	X	X	1987	N/A
Accident history	X	X	1987	30
Retirement date	X	X	1987	3 +
Termination date	X	X	1987	3 +
Vital status of retirees	N/A	N/A	N/A	N/A
Cause of death data	N/A	N/A	N/A	N/A

[ ] Mark (X) this box if you attach a continuation sheet.

9.02 In accordance with the instructions, complete the following table for each activity in which you engage.

CBI

[ ]

a. Activity	b. Process Category	c. Yearly Quantity (kg)	d. Total Workers	e. Total Worker-Hours
Manufacture of the listed substance	Enclosed	N/A	N/A	N/A
	Controlled Release	N/A	N/A	N/A
	Open	N/A	N/A	N/A
On-site use as reactant	Enclosed	N/A	N/A	N/A
	Controlled Release	1,209,263	13	2,500
	Open	N/A	N/A	N/A
On-site use as nonreactant	Enclosed	N/A	N/A	N/A
	Controlled Release	N/A	N/A	N/A
	Open	N/A	N/A	N/A
On-site preparation of products	Enclosed	N/A	N/A	N/A
	Controlled Release	N/A	N/A	N/A
	Open	N/A	N/A	N/A

[ ] Mark (X) this box if you attach a continuation sheet.

9.03 Provide a descriptive job title for each labor category at your facility that encompasses workers who may potentially come in contact with or be exposed to the listed substance.

CBI

[ ]

Labor Category	Descriptive Job Title
A	Technical Manager
B	Chemical Receiver/Compounder
C	Foam Line Operator
D	Assistant Foam Line Operator
E	Saw Operator
F	Crane Operator
G	Baumer Operator
H	
I	
J	

[ ] Mark (X) this box if you attach a continuation sheet.

9.04 In accordance with the instructions, provide your process block flow diagram(s) and indicate associated work areas.

CBI

[ ] Process type ..... Flexible Slabstock Polyurethane Foam Mfg. Process

[X] Mark (X) this box if you attach a continuation sheet.

9.05 Describe the various work area(s) shown in question 9.04 that encompass workers who may potentially come in contact with or be exposed to the listed substance. Add any additional areas not shown in the process block flow diagram in question 7.01 or 7.02. Photocopy this question and complete it separately for each process type.

CBI

[ ] Process type ..... Flexible Slabstock Polyurethane Foam Mfg. Process

Work Area ID	Description of Work Areas and Worker Activities
1	Chemical storage, process tanks, pumping systems, and foam machine controls. Foam machine crew operates controls. Cutoff saw, side plastic and bottom paper takeups. Saw operator runs saw and removes side plastic and bottom paper.
2	Foam handling system. Crane operator stacks fresh foam buns. Cutoff saw operator marks buns.
3	Foam slitting. Slitter operator glues bun and operates slitting machine.

[ ] Mark (X) this box if you attach a continuation sheet.

9.06 Complete the following table for each work area identified in question 9.05, and for each labor category at your facility that encompasses workers who may potentially come in contact with or be exposed to the listed substance. Photocopy this question and complete it separately for each process type and work area.

CBI

[ ] Process type ..... Flexible Slabstock Polyurethane Foam Mfg. Process

Work area ..... # 1

Labor Category	Number of Workers Exposed	Mode of Exposure (e.g., direct skin contact)	Physical State of Listed Substance[1]	Average Length of Exposure Per Day[2]	Number of Days per Year Exposed
A	1	Direct Skin Contact Inhalation	OL,GU	D	184
B	1	Direct Skin Contact Inhalation	OL,GU	D	184
C	1	Direct Skin Contact Inhalation	OL,GU	D	184
D	1	Direct Skin Contact Inhalation	OL,GU	D	184
E	2	Inhalation	GU	D	184

[1]Use the following codes to designate the physical state of the listed substance at the point of exposure:

GC = Gas (condensible at ambient temperature and pressure)
GU = Gas (uncondensible at ambient temperature and pressure; includes fumes, vapors, etc.)
SO = Solid
SY = Sludge or slurry
AL = Aqueous liquid
OL = Organic liquid
IL = Immiscible liquid (specify phases, e.g., 90% water, 10% toluene)

[2]Use the following codes to designate average length of exposure per day:

A = 15 minutes or less
B = Greater than 15 minutes, but not exceeding 1 hour
C = Greater than one hour, but not exceeding 2 hours
D = Greater than 2 hours, but not exceeding 4 hours
E = Greater than 4 hours, but not exceeding 8 hours
F = Greater than 8 hours

[X] Mark (X) this box if you attach a continuation sheet.

9.07 For each labor category represented in question 9.06, indicate the 8-hour Time Weighted Average (TWA) exposure levels and the 15-minute peak exposure levels. Photocopy this question and complete it separately for each process type and work area.

CBI

[ ] Process type ..... Flexible Slabstock Polyurethane Foam Mfg. Process

Work area ..... # 1

Labor Category	8-hour TWA Exposure Level (ppm, mg/m^3, other-specify)	15-Minute Peak Exposure Level (ppm, mg/m^3, other-specify)
A	.0050 ppm	.032 ppm
B	.0024 ppm	.0083 ppm
C	.0026 ppm	.0068 ppm
D	.0020 ppm	.0085 ppm
E	.0015 ppm	.0035 ppm

[X] Mark (X) this box if you attach a continuation sheet.

PART B WORK PLACE MONITORING PROGRAM

9.08 If you monitor worker exposure to the listed substance, complete the following table.

CBI

[ ]

Sample/Test	Work Area ID	Testing Frequency (per year)	Number of Samples (per test)	Who Samples[1]	Analyzed In-House (Y/N)	Number of Years Records Maintained
Personal breathing zone	1,2,3	4	21	D	Y	30
General work area (air)	1,2,3	4	21	D	Y	30
Wipe samples	N/A	N/A	N/A	N/A	N/A	N/A
Adhesive patches	N/A	N/A	N/A	N/A	N/A	N/A
Blood samples	N/A	N/A	N/A	N/A	N/A	N/A
Urine samples	N/A	N/A	N/A	N/A	N/A	N/A
Respiratory samples	N/A	N/A	N/A	N/A	N/A	N/A
Allergy tests	N/A	N/A	N/A	N/A	N/A	N/A
Other (specify)						
Other (specify)						
Other (specify)						

[1]Use the following codes to designate who takes the monitoring samples:

A = Plant industrial hygienist
B = Insurance carrier
C = OSHA consultant
D = Other (specify) Chemical Engineer

[ ] Mark (X) this box if you attach a continuation sheet.

9.09 For each sample type identified in question 9.08, describe the type of sampling and analytical methodology used for each type of sample.

CBI

[ ]

Sample Type	Sampling and Analytical Methodology
Personal Monitoring	MDA Personal Monitor-Model 4100 MCM
	Integrating Reader/Recorder

9.10 If you conduct personal and/or ambient air monitoring for the listed substance, specify the following information for each equipment type used.

CBI

[ ]

Equipment Type[1]	Detection Limit[2]	Manufacturer	Averaging Time (hr)	Model Number
D	A	MDA Scientific	8Hr.TWA	4000 MCM

[1]Use the following codes to designate personal air monitoring equipment types:

A = Passive dosimeter
B = Detector tube
C = Charcoal filtration tube with pump
D = Other (specify) Battery Operated Pump

Use the following codes to designate ambient air monitoring equipment types:

E = Stationary monitors located within work area
F = Stationary monitors located within facility
G = Stationary monitors located at plant boundary
H = Mobile monitoring equipment (specify) _____
I = Other (specify) _____

[2]Use the following codes to designate detection limit units:

A = ppm
B = Fibers/cubic centimeter (f/cc)
C = Micrograms/cubic meter (μ/m^3)

[ ] Mark (X) this box if you attach a continuation sheet.

9.11 If you conduct routine medical tests for monitoring the health effects of exposure to the listed substance, specify the type and frequency of the tests.

CBI

[ ] Test Description	Frequency (weekly, monthly, yearly, etc.)
Physical Exam and Pulmonary Function Test	Semi-Annually
Physical History and X-Rays	Semi-Annually

[ ] Mark (X) this box if you attach a continuation sheet.

PART C ENGINEERING CONTROLS

9.12 Describe the engineering controls that you use to reduce or eliminate worker exposure to the listed substance. Photocopy this question and complete it separately for each process type and work area.

CBI

[ ] Process type ..... Flexible Slabstock Polyurethane Foam Mfg. Process

Work area ..... # 1

Engineering Controls	Used (Y/N)	Year Installed	Upgraded (Y/N)	Year Upgraded
Ventilation:				
Local exhaust	Y	1986	N	N/A
General dilution	N	N/A	N	N/A
Other (specify)				
	N	N/A	N	N/A
Vessel emission controls	N	N/A	N	N/A
Mechanical loading or packaging equipment	N	N/A	N	N/A
Other (specify)				

[XX] Mark (X) this box if you attach a continuation sheet.

9.13 Describe all equipment or process modifications you have made within the 3 years prior to the reporting year that have resulted in a reduction of worker exposure to the listed substance. For each equipment or process modification described, state the percentage reduction in exposure that resulted. Photocopy this question and complete it separately for each process type and work area.

CBI

[ ] Process type ..... Flexible Slabstock Polyurethane Foam Mfg. Process

Work area ..... # 1

Equipment or Process Modification	Reduction in Worker Exposure Per Year (%)
None	N/A

[X] Mark (X) this box if you attach a continuation sheet.

PART D PERSONAL PROTECTIVE AND SAFETY EQUIPMENT

9.14 Describe the personal protective and safety equipment that your workers wear or use in each work area in order to reduce or eliminate their exposure to the listed substance. Photocopy this question and complete it separately for each process type and work area.

CBI

[ ] Process type ..... Flexible Slabstock Polyurethane Foam Mfg. Process

Work area ..... # 1

Equipment Types	Wear or Use (Y/N)
Respirators	Y
Safety goggles/glasses	Y
Face shields	Y
Coveralls	N
Bib aprons	N
Chemical-resistant gloves	Y
Other (specify)	

[XX] Mark (X) this box if you attach a continuation sheet.

9.15 If workers use respirators when working with the listed substance, specify for each process type, the work areas where the respirators are used, the type of respirators used, the average usage, whether or not the respirators were fit tested, and the type and frequency of the fit tests. Photocopy this question and complete it separately for each process type.

CBI

[__] Process type ..... Flexible Slabstock Polyurethane Foam Mfg. Process

Work Area	Respirator Type	Average Usage[1]	Fit Tested (Y/N)	Type of Fit Test[2]	Frequency of Fit Tests (per year)
1	Full and half face, dual organic vapor cartridges	A	Y	QL	1
2	Full and half face, dual organic vapor cartridges	A	Y	QL	1
3	Full and half face, dual organic vapor cartridges	A	Y	QL	1

[1]Use the following codes to designate average usage:

A = Daily
B = Weekly
C = Monthly
D = Once a year
E = Other (specify) _____

[2]Use the following codes to designate the type of fit test:

QL = Qualitative
QT = Quantitative

[__] Mark (X) this box if you attach a continuation sheet.

PART E WORK PRACTICES

9.19 Describe all of the work practices and administrative controls used to reduce or eliminate worker exposure to the listed substance (e.g., restrict entrance only to authorized workers, mark areas with warning signs, insure worker detection and monitoring practices, provide worker training programs, etc.). Photocopy this question and complete it separately for each process type and work area.

CBI

[ ]

Process type ..... Flexible Slabstock Polyurethane Foam Mfg. Process

Work area ..... # 1

1. Limited Access to Area.
2. Respirator Protection
3. Personal Monitoring
4. Warning Signs
5. Ventilation
6. Training
7. SPCC Plan
8. Respirator Maintenance program

9.20 Indicate (X) how often you perform each housekeeping task used to clean up routine leaks or spills of the listed substance. Photocopy this question and complete it separately for each process type and work area.

Process type ..... Flexible Slabstock Polyurethane Foam Mfg. Process

Work area ..... # 1

Housekeeping Tasks	Less Than Once Per Day	1-2 Times Per Day	3-4 Times Per Day	More Than 4 Times Per Day
Sweeping	X	N/A	N/A	N/A
Vacuuming	X	N/A	N/A	N/A
Water flushing of floors	N/A	N/A	N/A	N/A
Other (specify)				
	N/A	N/A	N/A	N/A

[X] Mark (X) this box if you attach a continuation sheet.

9.21 Do you have a written medical action plan for responding to routine or emergency exposure to the listed substance?

Routine exposure

Yes 1

No 2

Emergency exposure

Yes 1

No 2

If yes, where are copies of the plan maintained?

Routine exposure: _____

Emergency exposure: _____

9.22 Do you have a written leak and spill cleanup plan that addresses the listed substance? Circle the appropriate response.

Yes ..... (1)

No 2

If yes, where are copies of the plan maintained? Technical managers office (Foam Processing Area)
Plant managers office
Plant Engineers office

Has this plan been coordinated with state or local government response organizations? Circle the appropriate response.

Yes ..... (1)

No 2

9.23 Who is responsible for monitoring worker safety at your facility? Circle the appropriate response.

Plant safety specialist 1

Insurance carrier 2

OSHA consultant 3

Other (specify) _____ 4

[ ] Mark (X) this box if you attach a continuation sheet.

SECTION 10 ENVIRONMENTAL RELEASE

General Instructions:

Complete Part E (questions 10.23-10.35) for each non-routine release involving the listed substance that occurred during the reporting year. Report on all releases that are equal to or greater than the listed substance's reportable quantity value, RQ, unless the release is federally permitted as defined in 42 U.S.C. 9601, or is specifically excluded under the definition of release as defined in 40 CFR 302.3(22). Reportable quantities are codified in 40 CFR Part 302. If the listed substance is not a hazardous substance under the Comprehensive Environmental Response, Compensation, and Liability Act of 1980 (CERCLA) and, thus, does not have an RQ, then report releases that exceed 2,270 kg. If such a substance however, is designated as a CERCLA hazardous substance, then report those releases that are equal to or greater than the RQ. The facility may have answered these questions or similar questions under the Agency's Accidental Release Information Program and may already have this information readily available. Assign a number to each release and use this number throughout this part to identify the release. Releases over more than a 24-hour period are not single releases, i.e., the release of a chemical substance equal to or greater than an RQ must be reported as a separate release for each 24-hour period the release exceeds the RQ.

For questions 10.25-10.35, answer the questions for each release identified in question 10.23. Photocopy these questions and complete them separately for each release.

PART A GENERAL INFORMATION

10.01 Where is your facility located? Circle all appropriate responses.

CBI

[__] Industrial area ..... (1)

Urban area 2

Residential area 3

Agricultural area 4

Rural area ..... (5)

Adjacent to a park or a recreational area 6

Within 1 mile of a navigable waterway 7

Within 1 mile of a school, university, hospital, or nursing home facility 8

Within 1 mile of a non-navigable waterway 9

Other (specify) _____ 10

[__] Mark (X) this box if you attach a continuation sheet.

10.02 Specify the exact location of your facility (from central point where process unit is located) in terms of latitude and longitude or Universal Transverse Mercader (UTM) coordinates.

Latitude ..... N31 ° 52 ' 70 "

Longitude ..... W106 ° 42 ' 50 "

UTM coordinates ..... Zone _____, Northing _____, Easting _____

10.03 If you monitor meteorological conditions in the vicinity of your facility, provide the following information.

Average annual precipitation ..... _____ inches/year

Predominant wind direction ..... _____

10.04 Indicate the depth to groundwater below your facility.

Depth to groundwater ..... _____ meters

10.05 For each on-site activity listed, indicate (Y/N/NA) all routine releases of the listed substance to the environment. (Refer to the instructions for a definition of Y, N, and NA.)

CBI

[ ]

On-Site Activity	Environmental Release Air	Water	Land
Manufacturing	N/A	N/A	N/A
Importing	N/A	N/A	N/A
Processing	Y	N	N
Otherwise used	N/A	N/A	N/A
Product or residual storage	Y	N	N
Disposal	N/A	N/A	N/A
Transport	N/A	N/A	N/A

[ ] Mark (X) this box if you attach a continuation sheet.

10.06 Provide the following information for the listed substance and specify the level of precision for each item. (Refer to the instructions for further explanation and an example.)

CBI

[ ]

Quantity discharged to the air	8.69	kg/yr ±	U/K %
Quantity discharged in wastewaters	N/A	kg/yr ±	___ %
Quantity managed as other waste in on-site treatment, storage, or disposal units	N/A	kg/yr ±	___ %
Quantity managed as other waste in off-site treatment, storage, or disposal units	N/A	kg/yr ±	___ %

[ ] Mark (X) this box if you attach a continuation sheet.

PART B RELEASE TO AIR

10.09 Point Source Emissions -- Identify each emission point source containing the listed substance in terms of a Stream ID Code as identified in your process block or residual treatment block flow diagram(s), and provide a description of each point source. Do not include raw material and product storage vents, or fugitive emission sources (e.g., equipment leaks). Photocopy this question and complete it separately for each process type.

CBI
[__]

Process type ..... Flexible Slabstock Polyurethane Foam Mfg. Process

Point Source ID Code	Description of Emission Point Source
700	Reaction Zone Vent
7QQ	Heat Bank Vent
7SS	Cut-Off Saw Vent
7UU	Conveyor System Vent
7ZZ	Foam Slitting Vent

[__] Mark (X) this box if you attach a continuation sheet.

10.10 Emission Characteristics - - Characterize the emissions for each Point Source ID Code identified in question 10.09 by completing the following table.

CBI

[ ]

Point Source ID Code	Physical State[1]	Average Emissions (kg/day)	Frequency[2] (days/yr)	Duration[3] (min/day)	Average Emission Factor[4]	Maximum Emission Rate (kg/min)	Maximum Emission Rate Frequency (events/yr)	Maximum Emission Rate Duration (min/event)
700	V	0.019	184	109	0.0000029	Unknown	Unknown	Unknown
70Q	V	0.0215	184	109	0.0000033	Unknown	Unknown	Unknown
7SS	V	0.00165	184	109	0.00000025	Unknown	Unknown	Unknown
7UU	V	0.000827	184	109	0.000000126	Unknown	Unknown	Unknown
7ZZ	V	Unknown	260	3.5	Unknown	Unknown	Unknown	Unknown

[1]Use the following codes to designate physical state at the point of release:
G = Gas; V = Vapor; P = Particulate; A = Aerosol; O = Other (specify) _____

[2]Frequency of emission at any level of emission

[3]Duration of emission at any level of emission

[4]Average Emission Factor — Provide estimated (± 25 percent) emission factor (kg of emission per kg of production of listed substance)

[ ] Mark (X) this box if you attach a continuation sheet.

10.11 Stack Parameters -- Identify the stack parameters for each Point Source ID Code identified in question 10.09 by completing the following table.

CBI

[ ]

Point Source ID Code	Stack Height(m)	Stack Inner Diameter (at outlet) (m)	Exhaust Temperature (°C)	Emission Exit Velocity (m/sec)	Building Height(m)[1]	Building Width(m)[2]	Vent Type[3]
700	12.2	0.76 X 0.76	25	6.0	7.9	49	V
700	12.2	0.76 X 0.76	25	5.5	7.9	49	V
7SS	12.2	0.76 X 0.76	25	3.2	7.9	49	V
7UU	12.2	0.76 X 0.76	25	3.5	7.9	49	V
7ZZ	8.8	1.2	25	Unknown	7.9	49	H

[1]Height of attached or adjacent building

[2]Width of attached or adjacent building

[3]Use the following codes to designate vent type:

H = Horizontal
V = Vertical

[ ] Mark (X) this box if you attach a continuation sheet.

10.12 If the listed substance is emitted in particulate form, indicate the particle size distribution for each Point Source ID Code identified in question 10.09. Photocopy this question and complete it separately for each emission point source.

CBI

[ ]

Point source ID code ..... _____

Size Range (microns)	Mass Fraction (% ± % precision)
< 1	N/A
≥ 1 to < 10	N/A
≥ 10 to < 30	N/A
≥ 30 to < 50	N/A
≥ 50 to < 100	N/A
≥ 100 to < 500	N/A
≥ 500	N/A
	Total = 100%

[ ] Mark (X) this box if you attach a continuation sheet.

10.13 Equipment Leaks -- Complete the following table by providing the number of equipment types listed which are exposed to the listed substance and which are in service according to the specified weight percent of the listed substance passing through the component. Do this for each process type identified in your process block or residual treatment block flow diagram(s). Do not include equipment types that are not exposed to the listed substance. If this is a batch or intermittently operated process, give an overall percentage of time per year that the process type is exposed to the listed substance. Photocopy this question and complete it separately for each process type.

CBI

[ ] Process type ..... Flexible Slabstock Polyurethane Foam Mfg. Process

Percentage of time per year that the listed substance is exposed to this process type ..... 100 %

Equipment Type	Number of Components in Service by Weight Percent of Listed Substance in Process Stream: Less than 5%	5-10%	11-25%	26-75%	76-99%	Greater than 99%
Pump seals[1]						
Packed	N/A	N/A	N/A	N/A	N/A	None
Mechanical						3
Double mechanical[2]						None
Compressor seals[1]						None
Flanges						17
Valves						
Gas[3]						None
Liquid						19
Pressure relief devices[4] (Gas or vapor only)						None
Sample connections						
Gas						None
Liquid						3
Open-ended lines[5] (e.g., purge, vent)						
Gas						None
Liquid						1

[1] List the number of pump and compressor seals, rather than the number of pumps or compressors

10.13 continued on next page

[ ] Mark (X) this box if you attach a continuation sheet.

10.13 (continued)

[2]If double mechanical seals are operated with the barrier (B) fluid at a pressure greater than the pump stuffing box pressure and/or equipped with a sensor (S) that will detect failure of the seal system, the barrier fluid system, or both, indicate with a "B" and/or an "S", respectively

[3]Conditions existing in the valve during normal operation

[4]Report all pressure relief devices in service, including those equipped with control devices

[5]Lines closed during normal operation that would be used during maintenance operations

---

10.14 Pressure Relief Devices with Controls -- Complete the following table for those pressure relief devices identified in 10.13 to indicate which pressure relief devices in service are controlled. If a pressure relief device is not controlled, enter "None" under column c.

CBI

[ ]

a. Number of Pressure Relief Devices	b. Percent Chemical in Vessel[1]	c. Control Device	d. Estimated Control Efficiency[2]
N/A	N/A	N/A	N/A
N/A	N/A	N/A	N/A
N/A	N/A	N/A	N/A
N/A	N/A	N/A	N/A
N/A	N/A	N/A	N/A
N/A	N/A	N/A	N/A
N/A	N/A	N/A	N/A
N/A	N/A	N/A	N/A
N/A	N/A	N/A	N/A

[1]Refer to the table in question 10.13 and record the percent range given under the heading entitled "Number of Components in Service by Weight Percent of Listed Substance" (e.g., <5%, 5-10%, 11-25%, etc.)

[2]The EPA assigns a control efficiency of 100 percent for equipment leaks controlled with rupture discs under normal operating conditions. The EPA assigns a control efficiency of 98 percent for emissions routed to a flare under normal operating conditions

---

[ ] Mark (X) this box if you attach a continuation sheet.

10.15 Equipment Leak Detection -- If a formal leak detection and repair program is in place, complete the following table regarding those leak detection and repair procedures. Photocopy this question and complete it separately for each process type.

CBI

[ ] Process type ..... NA

Equipment Type	Leak Detection Concentration (ppm or mg/m^3) Measured at ____ Inches from Source	Detection Device[1]	Frequency of Leak Detection (per year)	Repairs Initiated (days after detection)	Repairs Completed (days after initiated)
Pump seals					
Packed	N/A	N/A	N/A	N/A	N/A
Mechanical					
Double mechanical					
Compressor seals					
Flanges					
Valves					
Gas					
Liquid					
Pressure relief devices (gas or vapor only)					
Sample connections					
Gas					
Liquid					
Open-ended lines					
Gas					
Liquid					

[1] Use the following codes to designate detection device:

POVA = Portable organic vapor analyzer
FPM = Fixed point monitoring
O = Other (specify) _____

[ ] Mark (X) this box if you attach a continuation sheet.

10.16 Raw Material, Intermediate and Product Storage Emissions - - Complete the following table by providing the information on each liquid raw material, intermediate, and product storage vessel containing the listed substance as identified in your process block or residual treatment block flow diagram(s).

CBI

[ ]

Vessel Type[1]	Floating Roof Seals[2]	Composition of Stored Materials[3]	Throughput (liters per year)	Vessel Filling Rate (gpm)	Vessel Filling Duration (min)	Vessel Inner Diameter (m)	Vessel Height (m)	Operating Vessel Volume (l)	Vessel Emission Controls[4]	Design Flow Rate[5]	Vent Diameter (cm)	Control Efficiency (%)	Basis for Estimate[6]
F	N/A	99.960	23246	75	125	3	4.9	35,580	None	N/A	5.3	N/A	N/A
F	N/A	99.960	23246	75	125	3	4.9	35,580	None	N/A	5.3	N/A	N/A
F	N/A	99.960	23246	75	125	3	4.9	35,580	None	N/A	5.3	N/A	N/A
F	N/A	99.960	69738	75	125	3	4.8	35,580	None	N/A	5.3	N/A	N/A

[1]Use the following codes to designate vessel type:

F = Fixed roof
CIF = Contact internal floating roof
NCIF = Noncontact internal floating roof
EFR = External floating roof
P = Pressure vessel (indicate pressure rating)
H = Horizontal
U = Underground

[2]Use the following codes to designate floating roof seals:

MS1 = Mechanical shoe, primary
MS2 = Shoe-mounted secondary
MS2R = Rim-mounted, secondary
LM1 = Liquid-mounted resilient filled seal, primary
LM2 = Rim-mounted shield
LMW = Weather shield
VM1 = Vapor mounted resilient filled seal, primary
VM2 = Rim-mounted secondary
VMW = Weather shield

[3]Indicate weight percent of the listed substance. Include the total volatile organic content in parenthesis

[4]Other than floating roofs

[5]Gas/vapor flow rate the emission control device was designed to handle (specify flow rate units)

[6]Use the following codes to designate basis for estimate of control efficiency:

C = Calculations
S = Sampling

[ ] Mark (X) this box if you attach a continuation sheet.

PART E NON-ROUTINE RELEASES

10.23 Indicate the date and time when the release occurred and when the release ceased or was stopped. If there were more than six releases, attach a continuation sheet and list all releases.

N/A

Release	Date Started	Time (am/pm)	Date Stopped	Time (am/pm)
1	N/A	N/A	N/A	N/A
2	N/A	N/A	N/A	N/A
3	N/A	N/A	N/A	N/A
4	N/A	N/A	N/A	N/A
5	N/A	N/A	N/A	N/A
6	N/A	N/A	N/A	N/A

10.24 Specify the weather conditions at the time of each release.

Release	Wind Speed (km/hr)	Wind Direction	Humidity (%)	Temperature (°C)	Precipitation (Y/N)
1					
2					
3					
4					
5					
6					

[ ] Mark (X) this box if you attach a continuation sheet.

APPENDIX I: List of Continuation Sheets

Attach continuation sheets for sections of this form and optional information after this page. In column 1, clearly identify the continuation sheet by listing the question number to which it relates. In column 2, enter the inclusive page numbers of the continuation sheet for each question number.

Question Number (1)	Continuation Sheet Page Numbers (2)
4.02	25A; 25B
7.01	42A
7.03	44A
7.04	45A: 45B
8.01	50A
9.04	91A
9.06	93A; 93B
9.07	94A; 94B
9.12	98A; 98B
9.13	99A; 99B
9.14	100A; 100B
9.19	105A; 105B
9.20	105A; 105B

[__] Mark (X) this box if you attach a continuation sheet.

(2)

MATERIAL SAFETY DATA SHEET

Dow Chemical U.S.A.* Midland, MI 48674 Emergency Phone: 517-636-4400

Product Code: 92097 Page: 1

PRODUCT NAME: VORANATE (R) T-80 TYPE I TOLUENE DIISOCYANATE

Effective Date: 10/06/88 Date Printed: 10/15/88 MSDS:000609

1. INGREDIENTS: (% w/w, unless otherwise noted)

Toluene-2,4-diisocyanate (TDI)	CAS# 000584-84-9	80%
Toluene-2,6-diisocyanate	CAS# 000091-08-7	20%

This document is prepared pursuant to the OSHA Hazard Communication Standard (29 CFR 1910.1200). In addition, other substances not 'Hazardous' per this OSHA Standard may be listed. Where proprietary ingredient shows, the identity may be made available as provided in this standard.

2. PHYSICAL DATA:

BOILING POINT: 250C (482F)
VAP PRESS: 0.01 mmHg @ 20C
VAP DENSITY: 6.0
SOL. IN WATER: Insoluble
SP. GRAVITY: 1.22 @ 25/15.5C
APPEARANCE: Water white to pale yellow liquid.
ODOR: Sharp pungent odor.

3. FIRE AND EXPLOSION HAZARD DATA:

FLASH POINT: 127C (260F)
METHOD USED: PMCC, ASTM D-93

FLAMMABLE LIMITS
LFL: Not determined
UFL: Not determined

EXTINGUISHING MEDIA: Carbon dioxide, dry chemical, or foam. If water is used, it should be in very large quantity. The reaction between water and hot isocyanate may be vigorous.

FIRE & EXPLOSION HAZARDS: Down-wind personnel must be evacuated.

(Continued on Page 2)

(R) Indicates a Trademark of The Dow Chemical Company

* An Operating Unit of The Dow Chemical Company

3. FIRE AND EXPLOSION HAZARD DATA: (CONTINUED)

Do not reseal contaminated containers since pressure build-up may cause rupture. Fire point: 146C (295F).

FIRE-FIGHTING EQUIPMENT: People who are fighting isocyanate fires must be protected against nitrogen oxide fumes and isocyanate vapors by wearing positive pressure self-contained breathing apparatus and full protective clothing.

4. REACTIVITY DATA:

STABILITY: (CONDITIONS TO AVOID) Stable when stored under recommended storage conditions. Store in a dry place at temperatures between 18-41C (65-105F).

INCOMPATIBILITY: (SPECIFIC MATERIALS TO AVOID) Water, acid, base, alcohols, metal compounds, surface active materials. Avoid water as it reacts to form heat, CO2 and insoluble urea. The combined effect of the CO2 and heat can produce enough pressure to rupture a closed container.

HAZARDOUS DECOMPOSITION PRODUCTS: Isocyanate vapor and mist, carbon dioxide, carbon monoxide, nitrogen oxides and traces of hydrogen cyanide.

HAZARDOUS POLYMERIZATION: May occur with incompatible reactants, especially strong bases, water or temperatures over 41C (105F).

5. ENVIRONMENTAL AND DISPOSAL INFORMATION:

ACTION TO TAKE FOR SPILLS/LEAKS:

Evacuate and ventilate spill area, dike spill to prevent entry into water system, wear full protective equipment including respiratory equipment during clean up.

Major spill: Call Dow Chemical U.S.A. (409) 238-2112. If

(Continued on Page 3)

(R) Indicates a Trademark of The Dow Chemical Company

5. ENVIRONMENTAL AND DISPOSAL INFORMATION: (CONTINUED)

transportation spill involved call CHEMTREC (800) 424-9300. If temporary control of isocyanate vapor is required a blanket of protein foam (available at most fire departments) may be placed over the spill. Large quantities may be pumped into closed but not sealed containers for disposal.

Minor spill: Absorb the isocyanate with sawdust or other absorbent and shovel into open top containers. Do not make pressure tight. Transport to a well-ventilated area (outside) and treat with neutralizing solution consisting of a mixture of water and 3-8% concentrated ammonium hydroxide or 5-10% sodium carbonate. Add about 10 parts of neutralizer per part of isocyanate with mixing. Allow to stand for 48 hours letting evolved carbon dioxide to escape.

Clean-up: Decontaminate floor using water/ammonia solution with 1-2% added detergent letting stand over affected area for at least 10 minutes. Cover mops and brooms used for this with plastic and dispose properly (often by incineration).

DISPOSAL METHOD: Follow all federal, state and local regulations. Liquids are usually incinerated in a proper facility. Solids are usually also incinerated or landfilled. Empty drums should be filled with water. Let drum stand unsealed for 48 hours. Before disposal drums should be drained, triple rinsed, and holed to prevent reuse. Dispose of drain and rinse fluid according to federal, state and local laws and regulations. The most commonly accepted method is in an approved wastewater treatment facility. Drums should be disposed of in accordance with federal, state and local laws and regulations. Commonly accepted methods for disposal of plastic drums are disposal in an approved landfill after shredding or incineration in an approved industrial incinerator or other appropriate incinerator facility. Steel drums are commonly disposed in an approved landfill after crushing or in accordance with other approved procedures.

(Continued on Page 4)

(R) Indicates a Trademark of The Dow Chemical Company

6. HEALTH HAZARD DATA:

EYE: May cause pain, severe eye irritation and moderate corneal injury. Vapors may irritate eyes.

SKIN CONTACT: Prolonged or repeated exposure may cause severe irritation, even a burn. Skin contact may result in allergic reaction even though it is not expected to result in absorption of amounts sufficient to cause other adverse effects.

SKIN ABSORPTION: The LD50 for skin absorption in rabbits is >9400 mg/kg.

INGESTION: Single dose oral toxicity is low. The oral LD50 for rats is 5800 mg/kg. Ingestion may cause gastrointestinal irritation or ulceration.

INHALATION: Excessive vapor concentrations are attainable and could be hazardous on single exposure. Single and repeated excessive exposure may cause severe irritation to upper respiratory tract and lungs (choking sensation, chest tightness), respiratory sensitization, decreased ventilatory capacity, liver effects, cholinesterase depression, gastro-intestinal distress and/or neurologic disorders. The 4-hour LC50 for TDI for rats is 13.9 ppm.

SYSTEMIC & OTHER EFFECTS: Based on available data, repeated exposures are not anticipated to cause any additional significant adverse effects. For hazard communication purposes under OSHA standard 29 CFR Part 1910.1200, this chemical is listed as a potential carcinogen by Nat'l. Tox. Program and IARC. An oral study in which high doses of TDI were reported to cause cancer in animals has been found to contain numerous deficiencies which compromise the validity of the study. TDI did not cause cancer in laboratory animals exposed by inhalation, the most likely route of exposure. Birth defects are unlikely. Exposures having no effect on the mother should have no effect on the fetus. Did not cause birth defects in animals; other effects were seen in the fetus only at doses which caused toxic effects to the mother. Results of in vitro ("test tube") mutagenicity

(Continued on Page 5)

(R) Indicates a Trademark of The Dow Chemical Company

6. HEALTH HAZARD DATA: (CONTINUED)

tests have been inconclusive.

7. FIRST AID:

EYES: Irrigate with flowing water immediately and continuously for 15 minutes. Consult medical personnel.

SKIN: In case of contact, immediately flush skin with plenty of water for at least 15 minutes while removing contaminated clothing and shoes. Call a physician if irritation persists. Wash clothing before reuse. Destroy contaminated shoes.

INGESTION: Do not induce vomiting. Call a physician and/or transport to emergency facility immediately.

INHALATION: Remove to fresh air. If not breathing, give mouth-to-mouth resuscitation. If breathing is difficult, give oxygen. Call a physician.

NOTE TO PHYSICIAN: May cause tissue destruction leading to stricture. If lavage is performed, suggest endotracheal and/or esophagoscopic control. If burn is present, treat as any thermal burn, after decontamination. No specific antidote. Supportive care. Treatment based on judgment of the physician in response to reactions of the patient. The manifestations of the respiratory symptoms, including pulmonary edema, resulting from acute exposure may be delayed. May cause respiratory sensitization. Cholinesterase inhibition has been noted in human exposure but is not of benefit in determining exposure and is not correlated with signs of exposure.

(Continued on Page 6)

(R) Indicates a Trademark of The Dow Chemical Company

8. HANDLING PRECAUTIONS:

EXPOSURE GUIDELINE(S): OSHA PEL is 0.02 ppm as a ceiling limit for toluene 2,4-diisocyanate. ACGIH TLV is 0.005 ppm; 0.02 ppm STEL for toluene 2,4-diisocyanate. Dow Industrial Hygiene Guide is 0.02 ppm as a ceiling limit for toluene diisocyanate.

VENTILATION: Provide general and/or local exhaust ventilation to control airborne levels below the exposure guidelines.

RESPIRATORY PROTECTION: Atmospheric levels should be maintained below the exposure guideline. When respiratory protection is required for certain operations, use an approved supplied-air respirator. For emergency and other conditions where the exposure guideline may be greatly exceeded, use an approved positive-pressure self-contained breathing apparatus.

SKIN PROTECTION: Use protective clothing impervious to this material. Selection of specific items such as gloves, boots, apron, or full-body suit will depend on operation. Remove contaminated clothing immediately, wash skin area with soap and water, and launder clothing before reuse. Safety shower should be located in immediate work area.

EYE PROTECTION: Use chemical goggles. If vapor exposure causes eye irritation, use a full-face, supplied-air respirator. Eye wash fountain should be located in immediate work area.

9. ADDITIONAL INFORMATION:

REGULATORY REQUIREMENTS:

SARA HAZARD CATEGORY: This product has been reviewed according to the EPA 'Hazard Categories' promulgated under Sections 311 and 312 of the Superfund Amendment and Reauthorization Act of 1986 (SARA Title III) and is considered, under applicable definitions, to meet the following categories:

(Continued on Page 7)

(R) Indicates a Trademark of The Dow Chemical Company

* An Operating Unit of The Dow Chemical Company

9. ADDITIONAL INFORMATION: (CONTINUED)

An immediate health hazard
A delayed health hazard
A reactive hazard

SPECIAL PRECAUTIONS TO BE TAKEN IN HANDLING AND STORAGE: Warning properties of this material (irritation of eyes, nose and throat) not adequate to prevent chronic overexposure from inhalation. This material can produce asthmatic sensitization upon either single inhalation exposure to a relatively high concentration or upon repeated inhalation exposure to lower concentrations. Exposures to vapors of heated TDI can be extremely dangerous. (Have TDI neutralizer available for spills.)

MSDS STATUS: Revised Section 3, 5, 6 and 7.

(R) Indicates a Trademark of The Dow Chemical Company
The Information Herein Is Given In Good Faith, But No Warranty, Express Or Implied, Is Made. Consult The Dow Chemical Company For Further Information.

* An Operating Unit of The Dow Chemical Company

MATERIAL SAFETY DATA SHEET

Mobay Corporation
A Bayer USA INC. COMPANY

Bayer MOBAY

DIVISION ADDRESS

MOBAY CORPORATION
Polyurethane Division
Mobay Road
Pittsburgh, PA 15205-9741

ISSUE DATE 3/20/89
SUPERSEDES 1/2/89

TRANSPORTATION EMERGENCY: CALL CHEMTREC
TELEPHONE NO: 800-424-9300; DISTRICT OF COLUMBIA: 202-483-7616

MOBAY NON-TRANSPORTATION EMERGENCY NO.:
(412) 923-1800

I. PRODUCT IDENTIFICATION

PRODUCT NAME.....: Mondur TD-80 (All Grades)
PRODUCT CODE NUMBER.....: E-002
CHEMICAL FAMILY.....: Aromatic Isocyanate
CHEMICAL NAME.....: Toluene Diisocyanate (TDI)
SYNONYMS.....: Benzene, 1,3-diisocyanato methyl-
CAS NUMBER.....: 26471-62-5
T.S.C.A. STATUS.....: This product is listed on the TSCA Inventory.
OSHA HAZARD COMMUNICATION
STATUS.....: This product is hazardous under the criteria of the Federal OSHA Hazard Communication Standard 29 CFR 1910.1200.
CHEMICAL FORMULA.....: $C_9H_6N_2O_2$

II. HAZARDOUS INGREDIENTS

COMPONENTS:	%:	OSHA-PEL	ACGIH-TLV
2,4-Toluene Diisocyanate* (TDI) CAS# 584-84-9	80	0.02 ppm STEL 0.005 ppm 8HR TWA	0.005 ppm TWA 0.02 ppm STEL
2,6-Toluene Diisocyanate* (TDI) CAS# 91-08-7	20	Not Established	Not Established

*For Section 302 and 313 SARA information refer to Page 6, Section IX, SARA.

III. PHYSICAL DATA

APPEARANCE.....: Liquid
COLOR.....: Water white to pale yellow
ODOR.....: Sharp, pungent
ODOR THRESHOLD.....: Greater than TLV of 0.005 ppm
MOLECULAR WEIGHT.....: 174
MELT POINT/FREEZE POINT...: Approx. 55°F (13°C) for TDI
BOILING POINT.....: Approx. 484°F (251°C) for TDI
VAPOR PRESSURE.....: Approx. 0.025 mmHg @ 77°F (25°C) for TDI
VAPOR DENSITY (AIR=1).....: 6.0 for TDI
pH.....: Not Applicable
SPECIFIC GRAVITY.....: 1.22 @ 77°F (25°C)
BULK DENSITY.....: 10.18 lbs/gal
SOLUBILITY IN WATER.....: Not Soluble. Reacts slowly with water at normal room temperature to liberate CO_2 gas.
% VOLATILE BY VOLUME.....: Negligible

IV. FIRE & EXPLOSION DATA

FLASH POINT $^{o}F(^{o}C)$.....: $260^{o}F$ ($127^{o}C$) Pensky-Martens Closed Cup
FLAMMABLE LIMITS -
Lel.....: 0.9%
Uel.....: 9.5%
EXTINGUISHING MEDIA.....: Dry chemical (e.g. monoammonium phosphate, potassium sulfate, and potassium chloride), carbon dioxide, high expansion (proteinic) chemical foam, water spray for large fires. Caution: Reaction between water or foam and hot TDI can be vigorous.
SPECIAL FIRE FIGHTING PROCEDURES/UNUSUAL FIRE OR EXPLOSION HAZARDS:
Full emergency equipment with self-contained breathing apparatus and full protective clothing (such as rubber gloves, boots, bands around legs, arms and waist) should be worn by fire fighters. No skin surface should be exposed. During a fire, TDI vapors and other irritating, highly toxic gases may generated by thermal decomposition or combustion. (See Section VIII). At temperatures greater than $350^{o}F$ ($177^{o}C$) TDI forms carbodiimides with the release of CO_2 which can cause pressure build-up in closed containers. Explosive rupture is possible. Therefore, use cold water to cool fire-exposed containers.

V. HUMAN HEALTH DATA

PRIMARY ROUTE(S) OF ENTRY.....: Inhalation. Skin contact from liquid, vapors or aerosols.

EFFECTS AND SYMPTOMS OF OVEREXPOSURE

INHALATION

Acute Exposure. TDI vapors or mist at concentrations above the TLV can irritate (burning sensation) the mucous membranes in the respiratory tract (nose, throat, lungs) causing runny nose, sore throat, coughing, chest discomfort, shortness of breath and reduced lung function (breathing obstruction). Persons with a preexisting, nonspecific bronchial hyperreactivity can respond to concentrations below the TLV with similar symptoms as well as asthma attack. Exposure well above the TLV may lead to bronchitis, bronchial spasm and pulmonary edema (fluid in lungs). These effects are usually reversible. Chemical or hypersensitive pneumonitis, with flu-like symptoms (e.g., fever, chills), has also been reported. These symptoms can be delayed up to several hours after exposure.

Chronic Exposure. As a result of previous repeated overexposures or a single large dose, certain individuals may develop isocyanate sensitization (chemical asthma) which will cause them to react to a later exposure to isocyanate at levels well below the TLV. These symptoms, which can include chest tightness, wheezing, cough, shortness of breath or asthmatic attack, could be immediate or delayed up to several hours after exposure. Similar to many non-specific asthmatic responses, there are reports that once sensitized an individual can experience these symptoms upon exposure to dust, cold air or other irritants. This increased lung sensitivity can persist for weeks and in severe cases for several years. Chronic overexposure to isocyanate has also been reported to cause lung damage (including decrease in lung function) which may be permanent. Sensitization can either be temporary or permanent.

V. HUMAN HEALTH DATA (Continued)

SKIN CONTACT

Acute Exposure. Isocyanates react with skin protein and moisture and can cause irritation which may include the following symptoms: reddening, swelling, rash, scaling or blistering. Cured material is difficult to remove.

Chronic Exposure. Prolonged contact can cause reddening, swelling, rash, scaling, blistering, and, in some cases, skin sensitization. Individuals who have developed a skin sensitization can develop these symptoms as a result of contact with very small amounts of liquid material or as a result of exposure to vapor.

EYE CONTACT

Acute Exposure. Liquid, aerosols or vapors are severely irritating and can cause pain, tearing, reddening and swelling. If left untreated, corneal damage can occur and injury is slow to heal. However, damage is usually reversible. See Section VI for treatment.

Chronic Exposure. Prolonged vapor contact may cause conjunctivitis.

INGESTION

Acute Exposure. Can result in irritation and corrosive action in the mouth, stomach tissue and digestive tract. Symptoms can include sore throat, abdominal pain, nausea, vomiting and diarrhea.

Chronic Exposure. None Found

MEDICAL CONDITIONS

AGGRAVATED BY EXPOSURE..: Asthma, other respiratory disorders (bronchitis, emphysema, bronchial hyperreactivity), skin allergies, eczema.

CARCINOGENICITY.....: No carcinogenic activity was observed in lifetime inhalation studies in rats and mice (International Isocyanate Institute).

NTP.....: The National Toxicology Program reported that TDI caused an increase in the number of tumors in exposed rats over those counted in non-exposed rats. The TDI was administered in corn-oil and introduced into the stomach through a tube. Based on this study, the NTP has listed TDI as a substance that may reasonably be anticipated to be a carcinogen in its Fourth Annual Report on Carcinogens.

IARC.....: IARC has announced that it will list TDI as a substance for which there is sufficient evidence for its carcinogenicity in experimental animals but inadequate evidence for the carcinogenicity of TDI to humans (IARC Monograph 39).

OSHA.....: Not listed.

EXPOSURE LIMITS

OSHA PEL.....: 0.02 ppm STEL/0.005 ppm 8HR TWA for 2,4'-TDI

ACGIH TLV.....: 0.005 ppm TWA/0.02 ppm STEL

VI. EMERGENCY & FIRST AID PROCEDURES

EYE CONTACT.....: Flush with copious amounts of water, preferably lukewarm for at least 15 minutes holding eyelids open all the time. Refer individual to physician or an ophthalmologist for immediate follow-up.

VI. EMERGENCY & FIRST AID PROCEDURE (Continued)

SKIN CONTACT.....: Remove contaminated clothing immediately. Wash affected areas thoroughly with soap and water for at least 15 minutes. Tincture of green soap and water is also effective in removing isocyanates. Wash contaminated clothing thoroughly before reuse. For severe exposures, get under safety shower after removing clothing, then get medical attention. For lesser exposures, seek medical attention if irritation develops or persists after the area is washed.

INHALATION.....: Move to an area free from risk of further exposure. Administer oxygen or artificial respiration as needed. Obtain medical attention. Asthmatic-type symptoms may develop and may be immediate or delayed up to several hours. Consult physician.

INGESTION.....: Do not induce vomiting. Give 1 to 2 cups of milk or water to drink. DO NOT GIVE ANYTHING BY MOUTH TO AN UNCONSCIOUS PERSON. Consult physician.

NOTE TO PHYSICIAN.....: Eyes. Stain for evidence of corneal injury. If cornea is burned, instill antibiotic steroid preparation frequently. Workplace vapors have produced reversible corneal epithelial edema impairing vision. Skin. This compound is a known skin sensitizer. Treat symptomatically as for contact dermatitis or thermal burns. Ingestion. Treat symptomatically. There is no specific antidote. Inducing vomiting is contraindicated because of the irritating nature of this compound. Respiratory. This compound is a known pulmonary sensitizer. Treatment is essentially symptomatic. An individual having a skin or pulmonary sensitization reaction to this material should be removed from exposure to any isocyanate.

VII. EMPLOYEE PROTECTION RECOMMENDATIONS

EYE PROTECTION.....: Liquid chemical goggles or full-face shield. Contact lenses should not be worn. If vapor exposure is causing irritation, use a full-face, air-supplied respirator.

SKIN PROTECTION.....: Chemical resistant gloves (butyl rubber, nitrile rubber, polyvinyl alcohol). However, please note that PVA degrades in water. Cover as much of the exposed skin area as possible with appropriate clothing. If skin creams are used, keep the area covered only by the cream to a minimum.

RESPIRATORY PROTECTION....: An approved positive pressure air-supplied respirator is required whenever TDI concentrations are not known or exceed the Short-Term Exposure or Ceiling Limit of 0.02 ppm or exceed the 8-hour Time Weighted Average TLV of 0.005 ppm. An approved air-supplied respirator with full facepiece must also be worn during spray application, even if exhaust ventilation is used. For emergency and other conditions where the exposure limits may be greatly exceeded, use an approved, positive pressure self-contained breathing apparatus. TDI has poor warning properties since the odor at which TDI can be smelled is substantially higher than 0.02 ppm. Observe OSHA regulations for respirator use (29 CFR 1910.134).

VII. EMPLOYEE PROTECTION RECOMMENDATIONS (Continued)

VENTILATION.....: Local exhaust should be used to maintain levels below the TLV whenever TDI is handled, processed, or spray-applied. At normal room temperatures (70°F) TDI levels quickly exceed the TLV unless properly ventilated. Standard reference sources regarding industrial ventilation (e.g., ACGIH Industrial Ventilation) should be consulted for guidance about adequate ventilation.

MONITORING.....: TDI exposure levels must be monitored by accepted monitoring techniques to ensure that the TLV is not exceeded. (Contact Mobay for guidance). See Volume 1 (Chapter 17) and Volume 3 (Chapter 3) in Patty's Industrial Hygiene and Toxicology for sampling strategy.

MEDICAL SURVEILLANCE.....: Medical supervision of all employees who handle or come in contact with TDI is recommended. These should include preemployment and periodic medical examinations with respiratory function tests (FEV, FVC as a minimum). Persons with asthmatic-type conditions, chronic bronchitis, other chronic respiratory diseases or recurrent skin eczema or sensitization should be excluded from working with TDI. Once a person is diagnosed as sensitized to TDI, no further exposure can be permitted.

OTHER.....: Safety showers and eyewash stations should be available. Educate and train employees in safe use of product. Follow all label instructions.

VIII. REACTIVITY DATA

STABILITY.....: Stable under normal conditions.

POLYMERIZATION.....: May occur if in contact with moisture or other materials which react with isocyanates. Self-reaction may occur at temperatures over 350°F (177°C) or at lower temperatures if sufficient time is involved. See Section IV.

INCOMPATIBILITY
(MATERIALS TO AVOID)....: Water, amines, strong bases, alcohols. Will cause some corrosion to copper alloys and aluminum. Reacts with water to form heat, CO_2 and insoluble ureas.

HAZARDOUS DECOMPOSITION
PRODUCTS.....: By high heat and fire: carbon monoxide, oxides of nitrogen, traces of HCN, TDI vapors and mist.

IX. SPILL OR LEAK PROCEDURES

STEPS TO BE TAKEN IN CASE MATERIAL IS RELEASED OR SPILLED: Evacuate and ventilate spill area; dike spill to prevent entry into water system; wear full protective equipment, including respiratory equipment during clean-up. (See Section VII).

Major Spill: Call Mobay at 412/923-1800. If transportation spill, call CHEMTREC 800/424-9300. If temporary control of isocyanate vapor is required, a blanket of protein foam (available at most fire departments) may be placed over the spill. Large quantities may be pumped into closed, but not sealed, container for disposal.

IX. SPILL OR LEAK PROCEDURES (Continued)

Minor Spill: Absorb isocyanate with sawdust or other absorbent, shovel into suitable unsealed containers, transport to well-ventilated area (outside) and treat with neutralizing solution: mixture of water (80%) with non-ionic surfactant Tergitol TMN-10 (20%), or; water (90%), concentrated ammonia (3-8%) and detergent (2%). Add about 10 parts or neutralizer per part of isocyanate, with mixing. Allow to stand uncovered for 48 hours to let CO_2 escape.

Clean-up: Decontaminate floor with decontamination solution letting stand for at least 15 minutes.

CERCLA (SUPERFUND) REPORTABLE QUANTITY: 100 pounds for TDI

WASTE DISPOSAL METHOD.....: Follow all federal, state or local regulations. TDI must be disposed of in a permitted incinerator or landfill. Incineration is the preferred method for liquids. Solids are usually incinerated or landfilled. Empty containers must be handled with care due to product residue. Decontaminate containers prior to disposal. Empty decontaminated containers should be crushed to prevent reuse. DO NOT HEAT OR CUT EMPTY CONTAINER WITH ELECTRIC OR GAS TORCH. (See Sections IV and VIII). Vapors and gases may be highly toxic.

RCRA STATUS.....: TDI is listed as a hazardous waste (No. U-223) under Title 40 Code of Federal Regulations, Section 261.33 (f). The residue from decontaminating a TDI spill is also classified as a hazardous waste under Section 261.3 (c)(2) or RCRA.

SUPERFUND AMENDMENTS AND REAUTHORIZATION ACT (SARA), TITLE III:

Section 302 - Extremely Hazardous Substances: 2,4-Toluene Diisocyanate (TDI) CAS# 584-84-9 = 80%
2,6-Toluene Diisocyanate (TDI) CAS# 91-08-7 = 20%

Section 313 - Toxic Chemicals: 2,4-Toluene Diisocyanate (TDI) CAS# 584-84-9 = 80%
2,6-Toluene Diisocyanate (TDI) CAS# 91-08-7 = 20%

X. SPECIAL PRECAUTIONS & STORAGE DATA

STORAGE TEMPERATURE (MIN./MAX.).....: $70^{o}F$ ($21^{o}C$)/$90^{o}F$ ($32^{o}C$)

AVERAGE SHELF LIFE.....: 12 months

SPECIAL SENSITIVITY (HEAT, LIGHT, MOISTURE).: If container is exposed to high heat, $375^{o}F$ ($177^{o}C$) it can be pressurized and possibly rupture. TDI reacts slowly with water to form polyureas and liberates CO_2 gas. This gas can cause sealed containers to expand and possibly rupture.

PRECAUTIONS TO BE TAKEN IN HANDLING AND STORING.: Store in tightly closed containers to prevent moisture contamination. Do not reseal if contamination is suspected. Prevent all contact. Do not breathe the vapors. Warning properties (irritation of the eyes, nose and throat or odor) are not adequate to prevent chronic overexposure from inhalation. This material can produce asthmatic sensitization upon either single inhalation exposure to a relatively high concentration or upon repeated inhalation exposures to lower concentrations. Exposure to vapors of heated TDI can be extremely dangerous. Employee education and training in safe handling of this product are required under the OSHA Hazard Communication Standard.

XI. SHIPPING DATA

D.O.T. SHIPPING NAME.....: Toluene Diisocyanate
TECHNICAL SHIPPING NAME...: Toluene Diisocyanate (TDI)
D.O.T. HAZARD CLASS.....: Poison B
UN/NA NO.....: UN 2078
PRODUCT RQ.....: 100 pounds
D.O.T. LABELS.....: Poison
D.O.T. PLACARDS.....: Poison
FRT. CLASS BULK.....: Toluene Diisocyanate
FRT. CLASS PKG.....: Chemicals, NOI (Toluene Diisocyanate) NMFC 60000
PRODUCT LABEL.....: Mondur TD-80 Product Label

XII. ANIMAL TOXICITY DATA

ACUTE TOXICITY

ORAL, LD50.....: Range of 4130-6170 mg/kg (Rats and Mice)
DERMAL, LD50.....: Greater than 10,000 mg/kg (Rabbits)
INHALATION, LC50.(4 hr).: Range of 16-50 ppm (Rat), 10 ppm (Mouse), 11 ppm (Rabbit), 13 ppm (Guinea Pig).
EYE EFFECTS.....: Severe eye irritant capable of inducing corneal opacity.
SKIN EFFECTS.....: Moderate skin irritant. Primary dermal irritation score: 4.12/8.0 (Draize). However, repeated or prolonged contact may culminate in severe skin irritation and/or corrosion.
SENSITIZATION.....: Skin sensitizer in guinea pigs. One study using guinea pigs reported that repeated skin contact with TDI caused respiratory sensitization. Although poorly defined in experimental animal models, TDI is known to be a pulmonary sensitizer in humans. In addition, there is some evidence that cross-sensitization between different types of diisocyanates may occur.

SUB-CHRONIC/CHRONIC TOXICITY: Sub-chronic and chronic animal studies show that the primary effects of inhaling vapors and/or aerosols of TDI are restricted to the pulmonary systems. Emphysema, pulmonary edema, pneumonitis and rhinitis are common pathologic effects. Extended exposures to as low as 0.1 ppm TDI have induces pulmonary inflammation.

OTHER

CARCINOGENICITY.....: The NTP conducted carcinogenesis studies of a commercial grade TDI using rats and mice in which the test material was diluted in corn oil and administered by gavage. The investigators concluded that TDI was carcinogenic in male and female rats (fibrosarcomas, pancreatic adenomas, neoplastic liver nodules and mammary gland fibrosarcomas) and female mice (hemangiosarcomas and hepatocellular adenomas). However, chronic inhalation studies in which rats and mice were exposed to 0.05 and 0.15 ppm TDI (10-30 times recommended TLV, 8-hr level) induced no treatment-related tumorigenic effects. In these studies, both exposure levels produced extensive irritation to the nasal passages and upper respiratory system of the test animals indicating that suitable effective exposures were administered.

XII. ANIMAL TOXICITY DATA (Continued)

MUTAGENICITY.....: TDI is positive in the Ames assay with activation. However, mammalian cell transformation assays using human lung cells and Syrian hamster kidney cells were negative, as were micronucleus tests using rats and mice.

TERATOGENICITY.....: Rats were exposed to an 80:20 mixture of 2,4- and 2,6- toluene diisocyanate vapor at analytical concentrations of 0.021, 0.12 and 0.48 ppm. Minimal fetotoxicity was observed at a maternally toxic concentrations of 0.48 ppm. The NOEL for maternal and developmental toxicity was 0.12 ppm. No embryotoxicity or teratogenicity was observed.

AQUATIC TOXICITY.....: LC_{50} - 96 hr (static): 165 mg/liter (Fathead minnow)
LC_{50} - 96 hr (static): Greater than 508 mg/liter (Grass shrimp)
LC_{50} - 24 hr (static): Greater than 500 mg/liter (Daphnia magna)

XIII. APPROVALS

REASON FOR ISSUE.....: Revising TLV in Sections II and V
PREPARED BY.....: G. L. Copeland
APPROVED BY.....: J. H. Chapman
TITLE.....: Manager, Product Safety - Polyurethane & Coatings

This information is furnished without warranty, expressed or implied, except that it is accurate to the best knowledge of Mobay Corporation. The data on this sheet relates only to the specific material designated herein. Mobay Corporation assumes no legal responsibility for use or reliance upon these data.

7.01

PROCESS TYPE: FLEXIBLE SLABSTOCK FOAM MANUFACTURING PROCESS
INTERMEDIATES: NONE

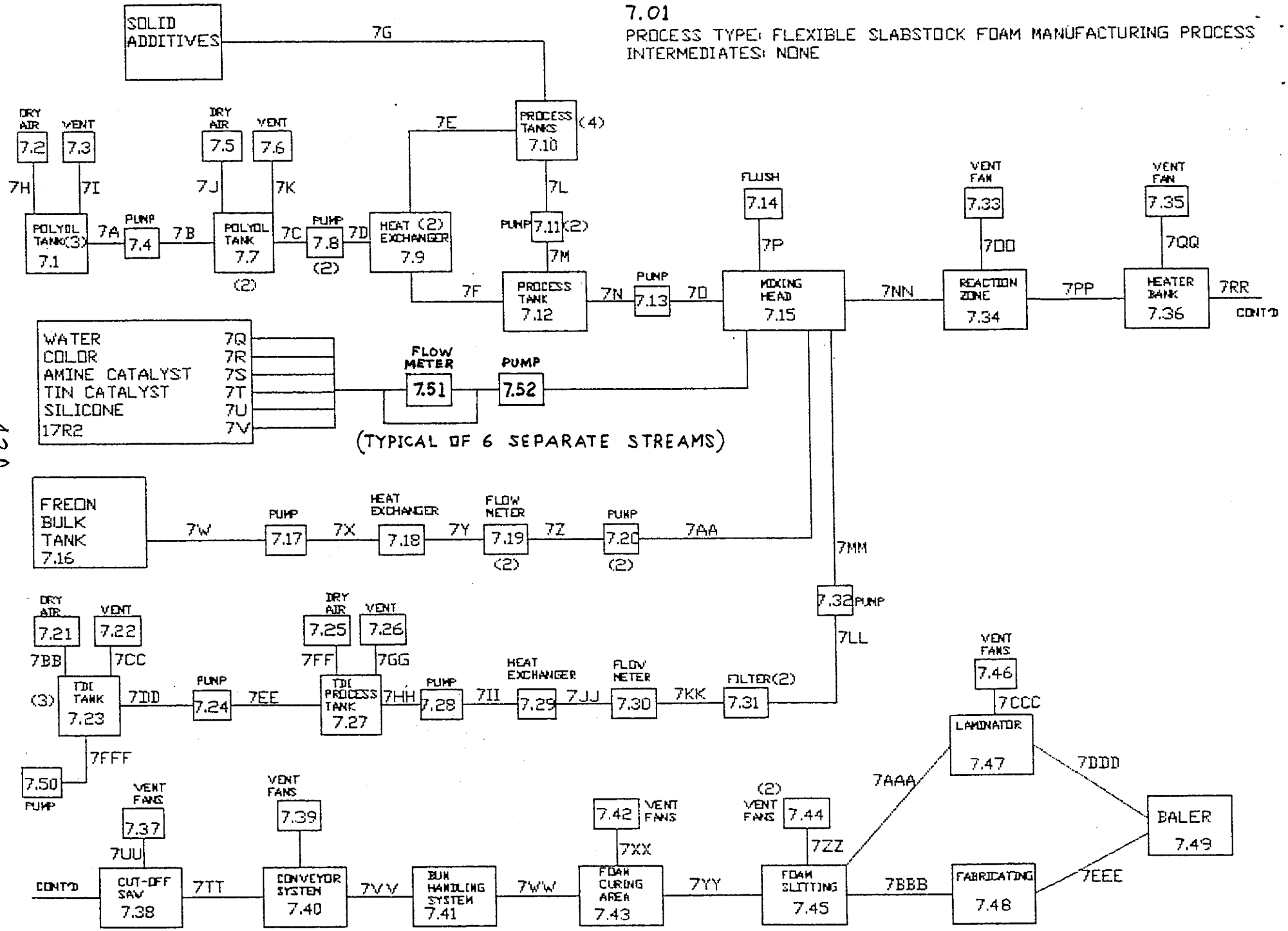

7.03

PROCESS TYPE: FLEXIBLE SLABSTOCK FOAM MANUFACTURING PROCESS
INTERMEDIATES: NONE

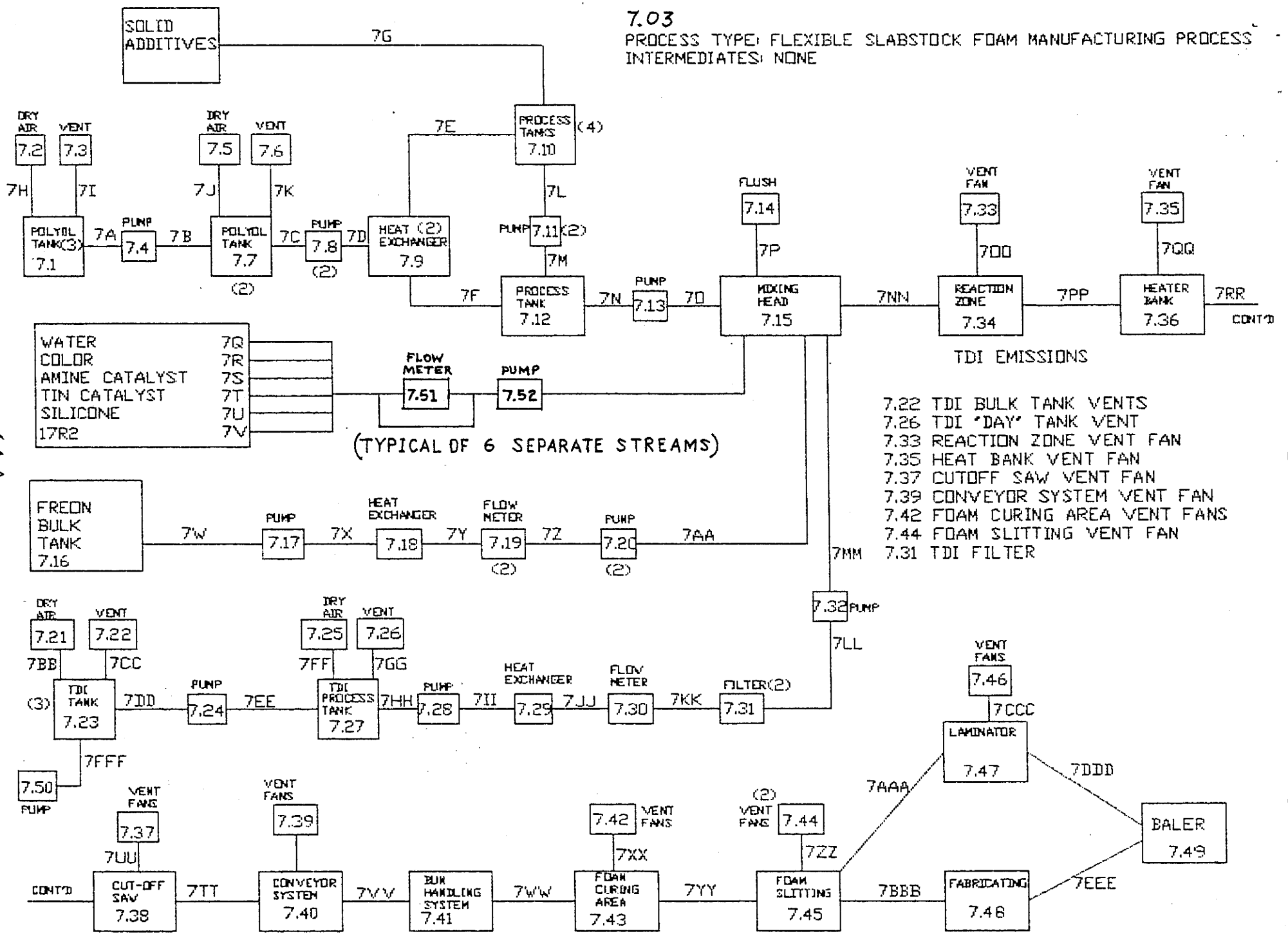

7.22 TDI BULK TANK VENTS
7.26 TDI 'DAY' TANK VENT
7.33 REACTION ZONE VENT FAN
7.35 HEAT BANK VENT FAN
7.37 CUTOFF SAW VENT FAN
7.39 CONVEYOR SYSTEM VENT FAN
7.42 FOAM CURING AREA VENT FANS
7.44 FOAM SLITTING VENT FAN
7.31 TDI FILTER

7.04

Unit Operation ID Number	Typical Equipment Storage	Operating Temperature (Range (°C)	Operating Pressure Range (mm Hg)	Vessel Composition
7.1	Bulk Storage Tank	25-32	Atmospheric	Steel
7.2	Silica Gel Cartridge	Ambient	Atmospheric	Steel
7.4	Gear Pump	25-32	< 5,000	Steel
7.5	Silical Gel Cartridge	Ambient	Atmospheric	Steel
7.7	"Day" Bulk Storage Tank	15-32	Atmospheric	Steel
7.8	Progressive Cavity Pump; Gear Pump	15-32	< 5,000	Steel
7.9	Plate Heat Exchanger	15-32	< 5,000	Steel
7.10	Weigh Tanks	15-20	Atmospheric	Stainless Steel
7.11	Progressive Cavity Pump	15-17	< 3,500	Steel
7.12	Weigh Tank	15-17	Atmospheric	Steel
7.13	Progressive Cavity Pump	15-17	1,000	Steel
7.15	Stirring Rod Mix Chamber	15-17	1,000	Steel
7.16	Bulk Storage Tank	15-27	< 300	Steel
7.17	Turbine Pump	15-27	2,600	Steel
7.18	Plate Heat Exchanger	15-27	< 2,600	Steel
7.19	Flow Meters	15-27	< 2,000	Glass
7.20	Postive Displacement Pump	15-18	2,500	Steel
7.21	Silaca Gel Cartridge	Ambient	< 5,000	Steel
7.23	Bulk Storage Tanks	25-40	Atmospheric	Steel
7.24	Gear Pump	25-40	< 5,000	Steel
7.25	Silica Gel Cartridges	Ambient	Atmospheric	Steel
7.27	Bulk Storage Tank	25-40	Atmospheric	Steel
7.28	Centrifugal Pump	25-40	< 5,000	Steel
7.29	Plate Heat Exchanger	20-40	< 5,000	Steel

7.04

Unit Operation ID Number	Typical Equipment Storage	Operating Temperature (Range (C)	Operating Pressure Range (mm Hg)	Vessel Composition
7.30	Flow Meter	17	< 5,000	Glass
7.31	Sock Filters	17	3,000	Polyester
7.32	Progressive Cavity Pump	17	< 36,000	Steel
7.33	ID Vent Fan	20	< 500	Steel
7.34	Trough, Fall Plates, Reaction Zone	<150	Atmospheric	Steel
7.35	ID Vent Fan	20	< 500	Steel
7.36	Electric IR Heaters	<200	N/A	Aluminum Ceramic
7.37	ID Vent Fan	20	< 500	Steel
7.38	Traversing Band Saw	20	N/A	Steel
7.39	ID Vent Fan	20	< 500	Steel
7.40	Slat Conveyor	20	N/A	Aluminum
7.41	Overhead Bridge Crane	Ambient	N/A	Steel
7.42	Horizontal Wall Fans	Ambient	< 500	Steel
7.43	Storage Area	Ambient	Atmospheric	N/A
7.44	Axial Flow Fan	Ambient	Atmospheric	Steel
7.45	Foam Slitting Machine	Ambient	Atomospheric	Steel
7.46	ID Vent Fan	160	< 500	Steel
7.47	Laminating Machine	160	N/A	N/A
7.48	Foam Cutting Area	Ambient	N/A	N/A
7.49	Baling Machine	Ambient	< 78,000	Steel
7.50	Gear Pump	25-40	< 6,000	Steel
7.51	Flow Meter	Ambient	1,000	Glass
7.52	Positive Displacement Pump	Ambient	< 40,000	Steel Aluminum

8.01

PROCESS TYPE: FLEXIBLE SLABSTOCK FOAM MANUFACTURING PROCESS
INTERMEDIATES: NONE

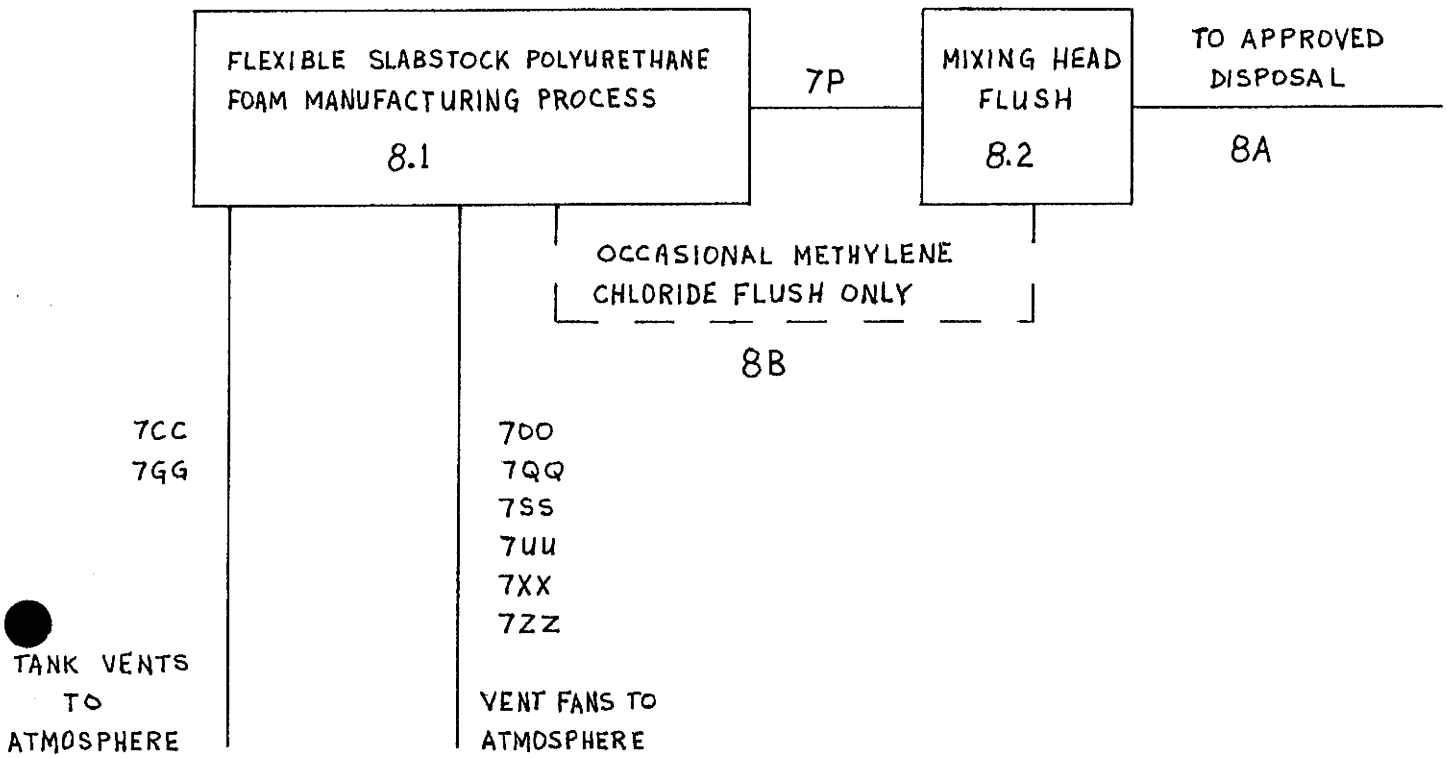

9.04
PROCESS TYPE: FLEXIBLE SLABSTOCK FOAM MANUFACTURING PROCESS
INTERMEDIATES: NONE

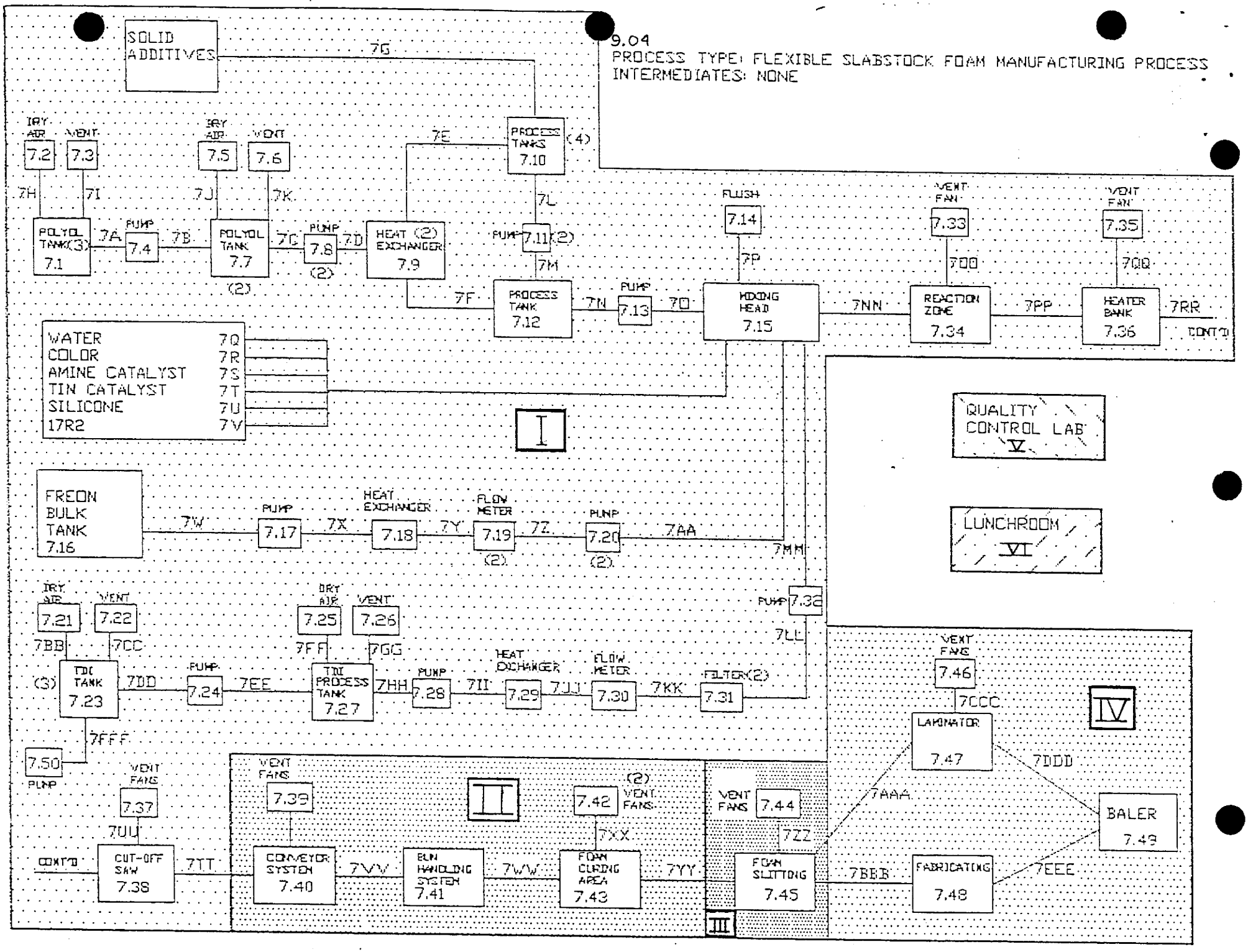

9.06 Complete the following table for each work area identified in question 9.05, and for each labor category at your facility that encompasses workers who may potentially come in contact with or be exposed to the listed substance. Photocopy this question and complete it separately for each process type and work area.

CBI

[ ] Process type ..... Flexible Slabstock Polyurethane Foam Mfg. Process

Work area ..... # 2

Labor Category	Number of Workers Exposed	Mode of Exposure (e.g., direct skin contact)	Physical State of Listed Substance[1]	Average Length of Exposure Per Day[2]	Number of Days per Year Exposed
E	2	Inhalation	GU	D	184
F	2	Inhalation	GU	D	184

[1]Use the following codes to designate the physical state of the listed substance at the point of exposure:

GC = Gas (condensible at ambient temperature and pressure)
GU = Gas (uncondensible at ambient temperature and pressure; includes fumes, vapors, etc.)
SO = Solid
SY = Sludge or slurry
AL = Aqueous liquid
OL = Organic liquid
IL = Immiscible liquid (specify phases, e.g., 90% water, 10% toluene)

[2]Use the following codes to designate average length of exposure per day:

A = 15 minutes or less
B = Greater than 15 minutes, but not exceeding 1 hour
C = Greater than one hour, but not exceeding 2 hours
D = Greater than 2 hours, but not exceeding 4 hours
E = Greater than 4 hours, but not exceeding 8 hours
F = Greater than 8 hours

[XX] Mark (X) this box if you attach a continuation sheet.

9.06 Complete the following table for each work area identified in question 9.05, and for each labor category at your facility that encompasses workers who may potentially come in contact with or be exposed to the listed substance. Photocopy this question and complete it separately for each process type and work area.

CBI

[ ] Process type ..... Flexible Slabstock Polyurethane Foam Mfg. Process

Work area ..... # 3

Labor Category	Number of Workers Exposed	Mode of Exposure (e.g., direct skin contact)	Physical State of Listed Substance[1]	Average Length of Exposure Per Day[2]	Number of Days per Year Exposed
G	3	Inhalation	GU	A	260

[1]Use the following codes to designate the physical state of the listed substance at the point of exposure:

GC = Gas (condensible at ambient temperature and pressure)
GU = Gas (uncondensible at ambient temperature and pressure; includes fumes, vapors, etc.)
SO = Solid
SY = Sludge or slurry
AL = Aqueous liquid
OL = Organic liquid
IL = Immiscible liquid (specify phases, e.g., 90% water, 10% toluene)

[2]Use the following codes to designate average length of exposure per day:

A = 15 minutes or less
B = Greater than 15 minutes, but not exceeding 1 hour
C = Greater than one hour, but not exceeding 2 hours
D = Greater than 2 hours, but not exceeding 4 hours
E = Greater than 4 hours, but not exceeding 8 hours
F = Greater than 8 hours

[ ] Mark (X) this box if you attach a continuation sheet.

9.07 For each labor category represented in question 9.06, indicate the 8-hour Time Weighted Average (TWA) exposure levels and the 15-minute peak exposure levels. Photocopy this question and complete it separately for each process type and work area.

CBI

[ ] Process type ..... Flexible Slabstock Polyurethane Foam Mfg. Process

Work area ..... # 2

Labor Category	8-hour TWA Exposure Level (ppm, mg/m^3, other-specify)	15-Minute Peak Exposure Level (ppm, mg/m^3, other-specify)
E	.0015 ppm	.0035 ppm
F	.0015 ppm	.0040 ppm

[X] Mark (X) this box if you attach a continuation sheet.

9.07 For each labor category represented in question 9.06, indicate the 8-hour Time Weighted Average (TWA) exposure levels and the 15-minute peak exposure levels. Photocopy this question and complete it separately for each process type and work area.

CBI

[ ] Process type ..... Flexible Slabstock Polyurethane Foam Mfg. Process

Work area ..... # 3

Labor Category	8-hour TWA Exposure Level (ppm, mg/m^3, other-specify)	15-Minute Peak Exposure Level (ppm, mg/m^3, other-specify)
G	Unknown	Unknown

[ ] Mark (X) this box if you attach a continuation sheet.

PART C ENGINEERING CONTROLS

9.12 Describe the engineering controls that you use to reduce or eliminate worker exposure to the listed substance. Photocopy this question and complete it separately for each process type and work area.

CBI

[ ] Process type ..... Flexible Slabstock Polyurethane Foam Mfg. Process

Work area ..... # 2

Engineering Controls	Used (Y/N)	Year Installed	Upgraded (Y/N)	Year Upgraded
Ventilation:				
Local exhaust	Y	1986	N	N/A
General dilution	N	N/A	N	N/A
Other (specify)				
	N	N/A	N	N/A
Vessel emission controls	N	N/A	N	N/A
Mechanical loading or packaging equipment	N	N/A	N	N/A
Other (specify)				

[X] Mark (X) this box if you attach a continuation sheet.

PART C ENGINEERING CONTROLS

9.12 Describe the engineering controls that you use to reduce or eliminate worker exposure to the listed substance. Photocopy this question and complete it separately for each process type and work area.

CBI

[ ] Process type ..... Flexible Slabstock Polyurethane Foam Mfg. Process

Work area ..... # 3

Engineering Controls	Used (Y/N)	Year Installed	Upgraded (Y/N)	Year Upgraded
Ventilation:				
Local exhaust	Y	1986	N	N/A
General dilution	N	N/A	N	N/A
Other (specify)				
	N	N/A	N	N/A
Vessel emission controls	N	N/A	N	N/A
Mechanical loading or packaging equipment	N	N/A	N	N/A
Other (specify)				

[ ] Mark (X) this box if you attach a continuation sheet.

9.13 Describe all equipment or process modifications you have made within the 3 years prior to the reporting year that have resulted in a reduction of worker exposure to the listed substance. For each equipment or process modification described, state the percentage reduction in exposure that resulted. Photocopy this question and complete it separately for each process type and work area.

CBI

[ ] Process type ..... Flexible Slabstock Polyurethane Foam Mfg. Process

Work area ..... #2

Equipment or Process Modification	Reduction in Worker Exposure Per Year (%)
None	N/A

[X] Mark (X) this box if you attach a continuation sheet.

9.13 Describe all equipment or process modifications you have made within the 3 years prior to the reporting year that have resulted in a reduction of worker exposure to the listed substance. For each equipment or process modification described, state the percentage reduction in exposure that resulted. Photocopy this question and complete it separately for each process type and work area.

CBI

[ ] Process type ..... Flexible Slabstock Polyurethane Foam Mfg. Process

Work area ..... # 3

Equipment or Process Modification	Reduction in Worker Exposure Per Year (%)
None	N/A

[ ] Mark (X) this box if you attach a continuation sheet.

PART D PERSONAL PROTECTIVE AND SAFETY EQUIPMENT

9.14 Describe the personal protective and safety equipment that your workers wear or use in each work area in order to reduce or eliminate their exposure to the listed substance. Photocopy this question and complete it separately for each process type and work area.

CBI

[ ] Process type ..... Flexible Slabstock Polyurethane Foam Mfg. Process

Work area ..... # 2

Equipment Types	Wear or Use (Y/N)
Respirators	Y
Safety goggles/glasses	Y
Face shields	N
Coveralls	N
Bib aprons	N
Chemical-resistant gloves	N
Other (specify)	

[X] Mark (X) this box if you attach a continuation sheet.

PART D PERSONAL PROTECTIVE AND SAFETY EQUIPMENT

9.14 Describe the personal protective and safety equipment that your workers wear or use in each work area in order to reduce or eliminate their exposure to the listed substance. Photocopy this question and complete it separately for each process type and work area.

CBI

[ ] Process type ..... Flexible Slabstock Polyurethane Foam Mfg. Process

Work area ..... # 3

Equipment Types	Wear or Use (Y/N)
Respirators	Y
Safety goggles/glasses	Y
Face shields	Y
Coveralls	N
Bib aprons	N
Chemical-resistant gloves	Y
Other (specify)	

[ ] Mark (X) this box if you attach a continuation sheet.

PART E WORK PRACTICES

9.19 Describe all of the work practices and administrative controls used to reduce or eliminate worker exposure to the listed substance (e.g., restrict entrance only to authorized workers, mark areas with warning signs, insure worker detection and monitoring practices, provide worker training programs, etc.). Photocopy this question and complete it separately for each process type and work area.

CBI

[ ]

Process type ..... Flexible Slabstock Polyurethane Foam Mfg. Process

Work area ..... # 2

1. Limited Access to Area
2. Respirator Protection
3. Personal Monitoring
4. Ventalation
5. Training
6. Respirator Maintenance Program

9.20 Indicate (X) how often you perform each housekeeping task used to clean up routine leaks or spills of the listed substance. Photocopy this question and complete it separately for each process type and work area.

Process type ..... Flexible Slabstock Polyurethane Foam Mfg. Process

Work area ..... # 2

Housekeeping Tasks	Less Than Once Per Day	1-2 Times Per Day	3-4 Times Per Day	More Than 4 Times Per Day
Sweeping	X	N/A	N/A	N/A
Vacuuming	X	N/A	N/A	N/A
Water flushing of floors	N/A	N/A	N/A	N/A
Other (specify)				
	N/A	N/A	N/A	N/A

[X] Mark (X) this box if you attach a continuation sheet.

PART E WORK PRACTICES

9.19 Describe all of the work practices and administrative controls used to reduce or eliminate worker exposure to the listed substance (e.g., restrict entrance only to authorized workers, mark areas with warning signs, insure worker detection and monitoring practices, provide worker training programs, etc.). Photocopy this question and complete it separately for each process type and work area.

CBI

[ ]

Process type ..... Flexible Slabstock Polyurethane Foam Mfg. Process

Work area ..... # 3

1. Respirator Protection
2. Personal Monitoring
3. Ventilation
4. Training
5. Respirator Maintenance Program

9.20 Indicate (X) how often you perform each housekeeping task used to clean up routine leaks or spills of the listed substance. Photocopy this question and complete it separately for each process type and work area.

Process type ..... Flexible Slabstock Polyurethane Foam Mfg. Process

Work area ..... # 3

Housekeeping Tasks	Less Than Once Per Day	1-2 Times Per Day	3-4 Times Per Day	More Than 4 Times Per Day
Sweeping	X	N/A	N/A	N/A
Vacuuming	X	N/A	N/A	N/A
Water flushing of floors	N/A	N/A	N/A	N/A
Other (specify)				
	N/A	N/A	N/A	N/A

[ ] Mark (X) this box if you attach a continuation sheet.