POOR LEGIBILITY

ONE OR MORE PAGES IN THIS DOCUMENT ARE DIFFICULT TO READ DUE TO THE QUALITY OF THE ORIGINAL

SFUND RECORDS CTR
88132459

Allied-Signal Aerospace Company

Electrodynamics Division
11600 Sherman Way
North Hollywood, CA 91605-5887
Telephone (818) 765-1010
(213) 877-2881

SFUND RECORDS CTR
2166-03038

RECEIVED
JUL 24 1991
PRC ENVIRONMENTAL MANAGEMENT, INC.

June 27, 1991

Chris Stubbs
South Coast Groundwater Section (H-6-4)
United States Environmental Protection Agency
P.O. Box 193062
San Francisco, CA 94119-3036

RE: EPA Information Request
11600 Sherman Way
N. Hollywood, CA 91605-5887

Dear Mr. Stubbs:

The following information is submitted in response to the Information Request dated April 17, 1991. The attached documents represent information from 1989 to the present. Our records indicate our last information submittal was August 24, 1989 to Mr. Jeff Zelikson, Director - Hazardous Waste Management Division, US EPA.

All responses were prepared by Nancy Girten, Senior Environmental Engineer, unless otherwise stated.

If you have any questions or comments, please call me at (213) 618-7224, or Nancy Girten at (213) 618-7225.

Sincerely,

Danilo Gutierrez
Manager, Health, Safety & Environment

Attachment/Enclosures

RESPONSE
TO
EPA INFORMATION REQUEST
DATED APRIL 17, 1991

1. Allied-Signal Aerospace Co.
   Electrodynamics Division
   11600 Sherman Way
   North Hollywood, CA 91605

   EPA ID # CAD 008325334

2. The subject facility has existed at the current site location since 1941. Past and present facility operations involve the manufacture of aerospace components. Presently, the product line consists of hydraulic actuary systems.

3. The current owner is Allied-Signal, Inc. Throughout the 50 year history of the site, the owner's name has changed, as a result of mergers, but the facility has maintained consistent operations and product lines (i.e. Bendix Corp. merged with Allied Corp. in 1982 to form Allied-Bendix Corp. In 1985, Allied Corp. merged with Signal Co. to form Allied-Signal, Inc.)

4. During the 50 year existence of the facility, the site has operated under one owner (re-named throughout the 50 years due to mergers). However, records indicate Bendix purchased the property in 1941 from Lankershim Ranch, Land & Water Co. At that time, the land consisted of gardens and empty fields.

5. There have not been prior operators and/or lessees of this property during Allied-Signal/Bendix ownership.

6. A site map is attached showing surface and subsurface structures, existing wells, drainage systems, and previously excavated areas. Information submitted in prior requests concerning assessment or excavation included:

   - Leighton & Assoc., Inc., Phase I - Preliminary Assessment of Hydrogeologic Conditions Related to a Leak Detection Program for Underground Storage Facilities at Bendix Corporation, 11600 Sherman Way, North Hollywood, California; May 29, 1984.

   - Leighton & Assoc., Inc., Phase II - Data Acquisition and Assessment of Hydrogeologic Conditions Related to a Leak Detection Program for Underground Storage Facilities at Bendix Corporation, 11600 Sherman Way, North Hollywood, California; October 15, 1984.

- Leighton & Assoc., Inc., Soil Sampling and Analysis, Tanks 2,3,4, and 5 Removal; February 22, 1985.

- Leighton & Assoc., Inc., Soil Sampling and Analysis Sump Area Adjacent to Tank #11, Bendix Corporation, 11600 Sherman Way, North Hollywood, California; August 16, 1985.

- Leighton & Assoc., Inc., Soil Sampling and Analysis for Identification of Contamination Plume in the Vicinity of Tank #13 Site, Bendix Corporation, 11600 Sherman Way, North Hollywood, California; June 23, 1986.

- Leighton & Assoc., Inc., Soil Sampling and Analysis for Identification of Contamination, Tank #8 Excavation, Bendix Corporation, 11600 Sherman Way, North Hollywood, California; December 19, 1986.

- Leighton & Assoc., Inc., Soil Sampling and Removal of Contaminated Soil from the Tank #8 Excavation, Bendix Corporation, 11600 Sherman Way, North Hollywood, California; February 5, 1987.

- Leighton & Assoc., Inc., Final Report of the Soil Removal in the Vicinity of the Tank 13 Site, Bendix Corporation, 11600 Sherman Way, North Hollywood, California; Volumes I and II, April 28, 1989.

- Leighton & Assoc., Inc., Preliminary Site Assessment of Hydrocarbon Contamination in the Vicinity Beneath the Overlap Test Stand Room located at Bendix Corporation, 11600 Sherman Way, North Hollywood, California; July 7, 1989.

In addition, the report detailing installation of the existing well was previously submitted (Leighton & Assoc., Inc., Installation of Groundwater Monitoring Well W-1 for Identification of Contamination Plume in the Vicinity of TAnk #13 Site, Bendix Corporation, 11600 Sherman Way, North Hollywood, California; July 24, 1987). For completeness, the well log for W-1 is included in this submission.

7. Attached technical and analytical information includes:

- Emission Inventory Plan; Allied-Signal Aerospace Company, Electrodynamics Division, August 10, 1989; prepared by Dynamac Corporation.

- Air Toxics Inventory Report; Allied-Signal Aerospace Company, Electrodynamics Division, June 1, 1990; prepared by Dynamac Corporation (includes Chrome Emissions from a Scrubber Exhaust Serving Two Hard Chrome Plating Tanks, One Chromic Acid Anodizing Tank, and One Chrome Strip Tank, May 8, 1990; prepared by Pacific Environmental Services, Inc.).

8. A complete site characterization involving the evaluation of groundwater and soil is currently being performed. Allied-Signal Electrodynamics Division has contracted T.A. Gleason & Assoc. to conduct the investigation. This characterization is being performed in preparation of closing the facility (estimated Dec. 1991), and possible sale of the property.This investigation is a comprehensive assessment involving the entire property (soil and groundwater). A final report detailing the first phase of the project (groundwater investigation) will be available November 1991, and will be submitted at that time. The current workplan is on file at the California Regional Water Quality Control Board, Los Angeles Region.

9. The facility site was acquired in 1941. Because of the previous use of the property, no disposal or placement of hazardous substances on, in or at the site was assumed.

10. Because the property was purchased in 1941, no investigations were conducted with respect to hazardous substance disposal on, in, or at the site.

11. This information is contained in the enclosed manifests (1989, 1990, and 1991), and the Business Emergency Response Plan for Allied-Signal Aerospace Company, Electrodynamics Division, updated March 8, 1991.

12. Any leaks, spills, releases or threats of releases have not occurred at the facility.

13. No releases or threatened releases were identified in response to Question 12.

14. The facility is currently connected to a sewer line monitored, and regulated by the L.A. County Sanitation District. These lines are shown on the enclosed site map. Leach fields or septic tanks are not used at the facility.

Response to
EPA Information Request
dated April 17, 1991

15. Any acts of any persons, other than Allied-Signal employees, agents, or those persons with whom Allied-Signal had a contractual relationship, did not contribute to the release of any hazardous substance at the facility.

16. Liability insurance policies are currently being requested from the parent company (Allied-Signal, Inc.) in Morristown, N.J. This information, if obtained, will be forwarded to the EPA when received.

17. See attached annual report.

18. See attached annual report.

19. See attached annual report.

20. See attached annual report.

21. The requested Articles of Incorporation and By-laws of Allied-Signal, Inc. are enclosed.

22. See attached annual report.

ALLIED-SIGNAL AEROSPACE COMPANY
ELECTRODYNAMICS DIVISION
11600 SHERMAN WAY
NORTH HOLLYWOOD, CALIFORNIA

A record search of the requested information has been completed. Information requested, and forwarded to the EPA in partial form in this submittal will be forwarded in its entirety when received. In addition, interviews with long-time employees who may have knowledge of the requested information has been conducted (this information will be included in the Phase I Site Characterization Report to be submitted upon completion in November 1991). Information responsive to the Information Request has been forwarded to EPA.

Nancy A. Girten
Sr. Environmental Engineer

SWORN TO BEFORE ME
THIS 28th DAY OF June 1991

Sheryl Fellinger
NOTARY PUBLIC

OFFICIAL SEAL
SHERYL FELLINGER
NOTARY PUBLIC - CALIFORNIA
LOS ANGELES COUNTY
My comm. expires JUN 28, 1991

State of California—Health and Welfare Agency
Form Approved OMB No. 2050—0039 (Expires 9-30-91)
Please print or type. (Form designed for use on elite (12-pitch typewriter).

1991 11

Department of Health Services
Toxic Substances Control Division
Sacramento, California

UNIFORM HAZARDOUS WASTE MANIFEST

1. Generator's US EPA ID No. CAD 980818215 Manifest Document No. 91102

2. Page 1 of

Information in the shaded areas is not required by Federal law.

3. Generator's Name and Mailing Address
Allied-Signal Electrodynamics Division
11600 Sherman Way N. Hollywood CA 91605

4. Generator's Phone (818) 503-3241

A. State Manifest Document Number 88457086

B. State Generator's ID HH 036 0 2 0 1 6 1 7

5. Transporter 1 Company Name: Pacific Environmental Mgt
6. US EPA ID Number: KAD 198 2 0 5 3 7 7 9

C. State Transporter's ID 20765 DOHS

D. Transporter's Phone (213) 324-2145

7. Transporter 2 Company Name: Pacific Treatment
8. US EPA ID Number: ICD 981 4 7 2 3 5 6

E. State Transporter's ID 469403

F. Transporter's Phone (619) 441-4018

9. Designated Facility Name and Site Address
USPCI Grassy Mountain Facility
3 miles east, 7 miles north of Knoll exit 150
Blue Ut AH
10. US EPA ID Number: UTD 199 1 3 0 1 7 4 8 SRS

G. State Facility's ID UT 199 1 3 0 1 7 4 8

H. Facility's Phone (801) 524-1054

11. US DOT Description (Including Proper Shipping Name, Hazard Class, and ID Number)	12. Containers No.	Type	13. Total Quantity	14. Unit Wt/Vol	I. Waste No.
a. RQ Hazardous Waste Solid NOS, ORM E NA 9189	0012	DF	00110	P	State 352; EPA/Other D026, D007
b.					State; EPA/Other
c.					State; EPA/Other
d.					State; EPA/Other

J. Additional Descriptions for Materials Listed Above
Profile # GM91-0802 chromic Acid Debri

K. Handling Codes for Wastes Listed Above
a. b. c. d.

15. Special Handling Instructions and Additional Information
Use proper personal protective equipment
24 hour emergency number (818) 765-1010 LOAD#23368

16. GENERATOR'S CERTIFICATION: I hereby declare that the contents of this consignment are fully and accurately described above by proper shipping name and are classified, packed, marked, and labeled, and are in all respects in proper condition for transport by highway according to applicable international and national government regulations.

If I am a large quantity generator, I certify that I have a program in place to reduce the volume and toxicity of waste generated to the degree I have determined to be economically practicable and that I have selected the practicable method of treatment, storage, or disposal currently available to me which minimizes the present and future threat to human health and the environment; OR, if I am a small quantity generator, I have made a good faith effort to minimize my waste generation and select the best waste management method that is available to me and that I can afford.

GENERATOR — Printed/Typed Name: Danilo Gutierrez — Signature: [signature] — Month Day Year: 10/15/1991

TRANSPORTER

17. Transporter 1 Acknowledgement of Receipt of Materials
Printed/Typed Name: Steve Stewart — Signature: [signature] — Month Day Year: 10/15/1991

18. Transporter 2 Acknowledgement of Receipt of Materials
Printed/Typed Name: Julius Hannegan — Signature: [signature] — Month Day Year: 10/21/1991

FACILITY

19. Discrepancy Indication Space

20. Facility Owner or Operator Certification of receipt of hazardous materials covered by this manifest except as noted in Item 19. X 21G-6775
Printed/Typed Name: S Anderson — Signature: [signature] — Month Day Year: 10/14/91

Do Not Write Below This Line

IN CASE OF AN EMERGENCY OR SPILL, CALL THE NATIONAL RESPONSE CENTER 1-800-424-8802; WITHIN CALIFORNIA CALL 1-800-852-7550

DHS 8022 A (1/88)
EPA 8700—22
(Rev. 9-88) Previous editions are obsolete.

SEND TO GENERATOR WITHIN 30 DAYS

041002

State of California—Health and Welfare Agency
Form Approved OMB No. 2050—0039 (Expires 9-30-91) #10507
Please print or type. (Form designed for use on elite (12-pitch) typewriter).

Department of Health Services
Toxic Substances Control Division
Sacramento, California

UNIFORM HAZARDOUS WASTE MANIFEST

1. Generator's US EPA ID No.: CAD008325334 — Manifest Document No.: 910119

2. Page 1 of 1

Information in the shaded areas is not required by Federal law.

3. Generator's Name and Mailing Address
Allied-Signal Electrodynamics Division
11600 Sherman Way, N. Hollywood, CA 91605

4. Generator's Phone (818) 503-3214

A. State Manifest Document Number: 88457076

B. State Generator's ID: HAH036032067

5. Transporter 1 Company Name: Disposal Control Service, Inc.

6. US EPA ID Number: CAT030034184

C. State Transporter's ID: 113146

D. Transporter's Phone: (800) 824-3345

7. Transporter 2 Company Name:

8. US EPA ID Number:

E. State Transporter's ID:

F. Transporter's Phone:

9. Designated Facility Name and Site Address
Demenno Kerdoon
2100 N. Alameda
Compton, CA 90222

10. US EPA ID Number: CAT080013352

G. State Facility's ID: CAT080013352

H. Facility's Phone: (213) 537-7100

11. US DOT Description (Including Proper Shipping Name, Hazard Class, and ID Number)	12. Containers No.	Type	13. Total Quantity	14. Unit Wt/Vol	I. Waste No.
a. Waste Petroleum Oil, NOS, Combustible Liquid ~~UN1207~~ UN1270	001	TT	01300	G	State: EPA/Other: 223 N/A
b.					State: EPA/Other:
c.					State: EPA/Other:
d.					State: EPA/Other:

J. Additional Descriptions for Materials Listed Above
Water Soluble Oil
Lubricating Oil
Water

K. Handling Codes for Wastes Listed Above
a. b. c. R-01 d.

15. Special Handling Instructions and Additional Information
USE PROPER PERSONAL PROTECTIVE EQUIPMENT
24-Hr. emergency contact (818) 765-1010

16.
GENERATOR'S CERTIFICATION: I hereby declare that the contents of this consignment are fully and accurately described above by proper shipping name and are classified, packed, marked, and labeled, and are in all respects in proper condition for transport by highway according to applicable international and national government regulations.

If I am a large quantity generator, I certify that I have a program in place to reduce the volume and toxicity of waste generated to the degree I have determined to be economically practicable and that I have selected the practicable method of treatment, storage, or disposal currently available to me which minimizes the present and future threat to human health and the environment; OR, if I am a small quantity generator, I have made a good faith effort to minimize my waste generation and select the best waste management method that is available to me and that I can afford.

Printed/Typed Name: NANCY A. GIRTEN — Signature: [signature] — Month Day Year: 05 31 91

17. Transporter 1 Acknowledgement of Receipt of Materials
Printed/Typed Name: DAVE DADE — Signature: [signature] — Month Day Year: 05 31 91

18. Transporter 2 Acknowledgement of Receipt of Materials
Printed/Typed Name: — Signature: — Month Day Year:

19. Discrepancy Indication Space

20. Facility Owner or Operator Certification of receipt of hazardous materials covered by this manifest except as noted in Item 19.
Printed/Typed Name: [signature] — Signature: [signature] — Month Day Year: 05 31 91

GENERATOR — TRANSPORTER — FACILITY

IN CASE OF AN EMERGENCY OR SPILL, CALL THE NATIONAL RESPONSE CENTER 1-800-424-8802; WITHIN CALIFORNIA CALL 1-800-852-7550

88457076

DHS 8022 A (1/88)
9700—22
Previous editions are obsolete.

Do Not Write Below This Line

OW6755

State of California—Health and Welfare Agency
Form Approved OMB No. 2050—0039 (Expires 9-30-91)
Please print or type. *(Form designed for use on elite (12-pitch typewriter).*

Department of Health Services
Toxic Substances Control Division
Sacramento, California

UNIFORM HAZARDOUS WASTE MANIFEST

1. Generator's US EPA ID No. CAD008132533 | Manifest Document No. 91101116 | 2. Page 1 of 1 | Information in the shaded areas is not required by Federal law.

3. Generator's Name and Mailing Address
Allied-Signal Electrodynamics Division
11600 Sherman Way
4. Generator's Phone (818) 503-3826

A. State Manifest Document Number 88457080
B. State Generator's ID HAH013602617

5. Transporter 1 Company Name: Disposal Control Service, Inc. | 6. US EPA ID Number: CAT080013611 8 1 4
C. State Transporter's ID 114194
D. Transporter's Phone (800) 834-3345

7. Transporter 2 Company Name | 8. US EPA ID Number
E. State Transporter's ID
F. Transporter's Phone

9. Designated Facility Name and Site Address
Norris Environmental
5215 S. Boyle Avenue
Vernon CA 90058
10. US EPA ID Number CAD019703019913
G. State Facility's ID CAD019703019913
H. Facility's Phone (213) 588-7111

11. US DOT Description (Including Proper Shipping Name, Hazard Class, and ID Number)	12. Containers No.	Type	13. Total Quantity	14. Unit Wt/Vol	I. Waste No.
a. RQ waste chromic Acid solution, NOS, Corrosive UN 1755	1011	TT	0216000	G	State 792 / EPA/Other D002
b.					State / EPA/Other
c.					State / EPA/Other
d.					State / EPA/Other

J. Additional Descriptions for Materials Listed Above
a. chromic acid rinse water Approval - E1205CR6

K. Handling Codes for Wastes Listed Above
a. 15 | b. | c. | d.

15. Special Handling Instructions and Additional Information
USE Proper Personal Protective equipment
Emergency Telephone number (818) 765-1010

16.
GENERATOR'S CERTIFICATION: I hereby declare that the contents of this consignment are fully and accurately described above by proper shipping name and are classified, packed, marked, and labeled, and are in all respects in proper condition for transport by highway according to applicable international and national government regulations.

If I am a large quantity generator, I certify that I have a program in place to reduce the volume and toxicity of waste generated to the degree I have determined to be economically practicable and that I have selected the practicable method of treatment, storage, or disposal currently available to me which minimizes the present and future threat to human health and the environment; OR, if I am a small quantity generator, I have made a good faith effort to minimize my waste generation and select the best waste management method that is available to me and that I can afford.

GENERATOR — Printed/Typed Name: Danilo GUTIERREZ | Signature | Month Day Year 10 4 22 91

TRANSPORTER — 17. Transporter 1 Acknowledgement of Receipt of Materials
Printed/Typed Name: TOM CASTANEDA | Signature | Month Day Year 10 4 22 91

18. Transporter 2 Acknowledgement of Receipt of Materials
Printed/Typed Name | Signature | Month Day Year

FACILITY — 19. Discrepancy Indication Space
[illegible] 722.725 LIA-DOOG, MOOT 0008

20. Facility Owner or Operator Certification of receipt of hazardous materials covered by this manifest except as noted in Item 19.
Printed/Typed Name: BI TIN VELASCO | Signature: Bi Tin Velasco | Month Day Year 10 4 22 91

IN CASE OF AN EMERGENCY OR SPILL, CALL THE NATIONAL RESPONSE CENTER 1-800-424-8802; WITHIN CALIFORNIA CALL 1-800-852-7550

Do Not Write Below This Line

DHS 8022 A (1/88)
EPA 8700—22
(Rev. 9-88) Previous editions are obsolete.

State of California—Health and Welfare Agency
Form Approved OMB No. 2050—0039 (Expires 9-30-91)
Please print or type. (Form designed for use on elite (12-pitch typewriter).

BP84961-1UP9564

#8808

Department of Health Services
Toxic Substances Control Division
Sacramento, California

UNIFORM HAZARDOUS WASTE MANIFEST

1. Generator's US EPA ID No.: CAD008325334 — Manifest Document No.: 91015
2. Page 1 of 1
Information in the shaded areas is not required by Federal law.

3. Generator's Name and Mailing Address: ALLIED-SIGNAL ELECTRODYNAMICS DIVISION, 11600 SHERMAN WAY, N. HOLLYWOOD 91605
4. Generator's Phone (818) 503-3214
A. State Manifest Document Number: 88457078
B. State Generator's ID: HAHQ36032067
5. Transporter 1 Company Name: DISPOSAL CONTROL SERVICE, INC
6. US EPA ID Number: CAT030034184
C. State Transporter's ID: 113146
D. Transporter's Phone: (800) 824-3345
7. Transporter 2 Company Name:
8. US EPA ID Number:
E. State Transporter's ID:
F. Transporter's Phone:
9. Designated Facility Name and Site Address: DEMENNO KERDOON, 2100 N. ALAMEDA, COMPTON, CA 90222
10. US EPA ID Number: CAT080013352
G. State Facility's ID: KAT0GGG/BBSR
H. Facility's Phone: (213) 537-7100

11. US DOT Description (Including Proper Shipping Name, Hazard Class, and ID Number)	12. Containers No.	Type	13. Total Quantity	14. Unit Wt/Vol	I. Waste No.
a. WASTE COOLANT NON-RCRA HAZARDOUS WASTE LIQUID	001	TT	[illegible]	G.	State 223 / EPA/Other N/A
b.					State / EPA/Other
c.					State / EPA/Other
d.					State / EPA/Other

J. Additional Descriptions for Materials Listed Above:
WATER SOLUBLE OIL 1%
LUBRICATING OIL 1%
WATER 98%

K. Handling Codes for Wastes Listed Above: a. K-01 b. c. d.

15. Special Handling Instructions and Additional Information: DOT-E7476
USE PROPER PERSONAL PROTECTIVE EQUIPMENT
EMERGENCY CONTACT 1-800 824-3345

16.
GENERATOR'S CERTIFICATION: I hereby declare that the contents of this consignment are fully and accurately described above by proper shipping name and are classified, packed, marked, and labeled, and are in all respects in proper condition for transport by highway according to applicable international and national government regulations.

If I am a large quantity generator, I certify that I have a program in place to reduce the volume and toxicity of waste generated to the degree I have determined to be economically practicable and that I have selected the practicable method of treatment, storage, or disposal currently available to me which minimizes the present and future threat to human health and the environment; OR, if I am a small quantity generator, I have made a good faith effort to minimize my waste generation and select the best waste management method that is available to me and that I can afford.

Printed/Typed Name: NANCY A GIRTEN — Signature: Nancy A Girten — Month Day Year: 04 19 91

17. Transporter 1 Acknowledgement of Receipt of Materials
Printed/Typed Name: DAVE DADE — Signature: [signature] — Month Day Year: 04 19 91

18. Transporter 2 Acknowledgement of Receipt of Materials
Printed/Typed Name: — Signature: — Month Day Year:

19. Discrepancy Indication Space

20. Facility Owner or Operator Certification of receipt of hazardous materials covered by this manifest except as noted in Item 19.
Printed/Typed Name: [signature] — Signature: [signature] — Month Day Year: 04 09 91

GENERATOR — TRANSPORTER — FACILITY

IN CASE OF AN EMERGENCY OR SPILL, CALL THE NATIONAL RESPONSE CENTER 1-800-424-8802; WITHIN CALIFORNIA CALL 1-800-852-7550

08451078

DHS 8022 A (1/88)
EPA 8700—22
(Rev. 9-88) Previous editions are obsolete.

Do Not Write Below This Line

OWS224

FOR USE THIS COPY TO GENERATOR WITHIN 30 DAYS

State of California—Health and Welfare Agency
Form Approved OMB No. 2050—0039 (Expires 9-30-91)
Please print or type. *Form designed for use on elite (12-pitch typewriter).*

See Instructions on Back of Page 6 and Front of Page 7

Department of Health Services
Toxic Substances Control Division
Sacramento, California

UNIFORM HAZARDOUS WASTE MANIFEST

1. Generator's US EPA ID No. CAD098325334 Manifest Document No. 911014

2. Page 1 of

Information in the shaded areas is not required by Federal law.

3. Generator's Name and Mailing Address
Allied-Signal Electrodynamics Division
11600 Sherman Way N. Hollywood, CA 91605

4. Generator's Phone (818) 503-3214

A. State Manifest Document Number 90377129

B. State Generator's ID HAH936032967

5. Transporter 1 Company Name Disposal Control Services Inc. 6. US EPA ID Number CAT080034184

C. State Transporter's ID 11305

D. Transporter's Phone 800-824-3345

7. Transporter 2 Company Name 8. US EPA ID Number

E. State Transporter's ID

F. Transporter's Phone

9. Designated Facility Name and Site Address
Norris Environmental Services
5215 S. Boyle Avenue
Vernon CA 90058

10. US EPA ID Number CAD097030993

G. State Facility's ID CAD097088993

H. Facility's Phone 213 588-7111

11. US DOT Description (Including Proper Shipping Name, Hazard Class, and ID Number)	12. Containers No.	Type	13. Total Quantity	14. Unit Wt/Vol	I. Waste No.
a. RQ waste chromic solution, corrosive material UN 1755	001	TT	4100	G	State 791 / EPA/Other D002
b.					State / EPA/Other
c.					State / EPA/Other
d.					State / EPA/Other

J. Additional Descriptions for Materials Listed Above
Profile # E1205CR6

K. Handling Codes for Wastes Listed Above
a. 15 b.
c. d.

15. Special Handling Instructions and Additional Information
Use Proper Personal Protective Equipment
Emergency Contact Danilo Gutierrez (818) 503-3626 or 714 598 2165

16.
GENERATOR'S CERTIFICATION: I hereby declare that the contents of this consignment are fully and accurately described above by proper shipping name and are classified, packed, marked, and labeled, and are in all respects in proper condition for transport by highway according to applicable international and national government regulations.

If I am a large quantity generator, I certify that I have a program in place to reduce the volume and toxicity of waste generated to the degree I have determined to be economically practicable and that I have selected the practicable method of treatment, storage, or disposal currently available to me which minimizes the present and future threat to human health and the environment; OR, if I am a small quantity generator, I have made a good faith effort to minimize my waste generation and select the best waste management method that is available to me and that I can afford.

GENERATOR — Printed/Typed Name: DANILO GUTIERREZ — Signature: [signature] — Month Day Year: 04 12 91

TRANSPORTER — 17. Transporter 1 Acknowledgement of Receipt of Materials — Printed/Typed Name: James Kiel — Signature: [signature] — Month Day Year: 04 12 91

18. Transporter 2 Acknowledgement of Receipt of Materials — Printed/Typed Name — Signature — Month Day Year

FACILITY — 19. Discrepancy Indication Space
Section I. Mark [illegible] - 7&E EIL 1006 D07 D08

20. Facility Owner or Operator Certification of receipt of hazardous materials covered by this manifest except as noted in Item 19.
Printed/Typed Name: RI TIN VELASCO — Signature: Ri Tin Velasco — Month Day Year: 04 15 91

IN CASE OF AN EMERGENCY OR SPILL, CALL THE NATIONAL RESPONSE CENTER 1-800-424-8802; WITHIN CALIFORNIA CALL 1-800-852-7550

DHS 8022 A
EPA 8700—22
(Rev. 6-89) Previous editions are obsolete.

Do Not Write Below This Line

State of California—Health and Welfare Agency
Form Approved OMB No. 2050—0039 (Expires 9-30-91)
Please print or type. *(Form designed for use on elite (12-pitch typewriter).*

Department of Health Services
Toxic Substances Control Division
Sacramento, California

UNIFORM HAZARDOUS WASTE MANIFEST

1. Generator's US EPA ID No. CAD008325334 Manifest Document No. 91012

2. Page 1 of 1

Information in the shaded areas is not required by Federal law.

3. Generator's Name and Mailing Address
Allied-Signal Electrodynamics Division
11600 Sherman Way, N. Hollywood, CA 91605

4. Generator's Phone (818) 503-3214

A. State Manifest Document Number 88457082

B. State Generator's ID CAH012603267

5. Transporter 1 Company Name: Disposal Control Service, Inc. 6. US EPA ID Number CAT080034184

C. State Transporter's ID 113148

D. Transporter's Phone (800) 824-3345

7. Transporter 2 Company Name 8. US EPA ID Number

E. State Transporter's ID

F. Transporter's Phone

9. Designated Facility Name and Site Address
Morris Environmental
5215 S. Boyle Ave.
Vernon, CA 90058

10. US EPA ID Number CAD097030993

G. State Facility's ID CAD097030993

H. Facility's Phone (213) 588-7111

11. US DOT Description (Including Proper Shipping Name, Hazard Class, and ID Number)	12. Containers No.	Type	13. Total Quantity	14. Unit Wt/Vol	I. Waste No.
a. RQ Waste Chromic Acid Solution, Corrosive Material UN 1755	001	TT	01110	G	State; EPA/Other 791; D002
b.					State; EPA/Other
c.					State; EPA/Other
d.					State; EPA/Other

J. Additional Descriptions for Materials Listed Above
11 a) Profile No. E1205CR6

K. Handling Codes for Wastes Listed Above
a. 15 b. c. d.

15. Special Handling Instructions and Additional Information
USE PROPER PERSONAL PROTECTIVE EQUIPMENT
EMERGENCY CONTACT (818) 765-1010

16.
GENERATOR'S CERTIFICATION: I hereby declare that the contents of this consignment are fully and accurately described above by proper shipping name and are classified, packed, marked, and labeled, and are in all respects in proper condition for transport by highway according to applicable international and national government regulations.

If I am a large quantity generator, I certify that I have a program in place to reduce the volume and toxicity of waste generated to the degree I have determined to be economically practicable and that I have selected the practicable method of treatment, storage, or disposal currently available to me which minimizes the present and future threat to human health and the environment; OR, if I am a small quantity generator, I have made a good faith effort to minimize my waste generation and select the best waste management method that is available to me and that I can afford.

Printed/Typed Name: NANCY A. GIRTEN Signature: Nancy A Girten Month Day Year 10 5 1 3 9 1

17. Transporter 1 Acknowledgement of Receipt of Materials
Printed/Typed Name: DAVE DADE Signature: Dave Dade Month Day Year 10 5 1 3 9 1

18. Transporter 2 Acknowledgement of Receipt of Materials
Printed/Typed Name Signature Month Day Year

19. Discrepancy Indication Space
[illegible] 722 725 LIA - DCC 6007 DCS

20. Facility Owner or Operator Certification of receipt of hazardous materials covered by this manifest except as noted in Item 19.
Printed/Typed Name: BI TIN VELASCO Signature: Bi Tin Velasco Month Day Year 10 5 1 3 9 1

GENERATOR

TRANSPORTER

FACILITY

IN CASE OF AN EMERGENCY OR SPILL, CALL THE NATIONAL RESPONSE CENTER 1-800-424-8802; WITHIN CALIFORNIA CALL 1-800-852-7550

Do Not Write Below This Line

DHS 8022 A (1/88)
EPA 8700—22
(Rev. 9-88) Previous editions are obsolete.

[illegible] THIS COPY TO GENERATOR WITHIN 30 DAYS

State of California—Health and Welfare Agency
Form Approved OMB No. 2050—0039 (Expires 9-30-91)
Please print or type. (Form designed for use on elite (12-pitch typewriter).

#7596

Department of Health Services
Toxic Substances Control Division
Sacramento, California

UNIFORM HAZARDOUS WASTE MANIFEST

1. Generator's US EPA ID No.: C AD 00 8 32 5 33 4
Manifest Document No.: 91 0 11

2. Page 1 of 1

Information in the shaded areas is not required by Federal law.

3. Generator's Name and Mailing Address
Allied-Signal Electrodynamics Division
11600 Sherman Way, N. Hollywood, CA 91605

4. Generator's Phone (818) 503-3214

A. State Manifest Document Number: 88457074

B. State Generator's ID: H AH 03 6 0 32 0 07

5. Transporter 1 Company Name: Disposal Control Service, Inc.

6. US EPA ID Number: C A T0 30 0 34 1 84

C. State Transporter's ID: 193043

D. Transporter's Phone: (800) 824-3345

7. Transporter 2 Company Name:

8. US EPA ID Number:

E. State Transporter's ID:

F. Transporter's Phone:

9. Designated Facility Name and Site Address
Demenno Kerdoon
2100 N. Alameda
Compton, CA 90222

10. US EPA ID Number: C A T0 30 0 13 3 5 2

G. State Facility's ID: CAT080013352

H. Facility's Phone: (213) 537-7100

(213) 537-7100

11. US DOT Description (Including Proper Shipping Name, Hazard Class, and ID Number)	12. Containers No.	Type	13. Total Quantity	14. Unit Wt/Vol	Waste No.
a. Waste Coolant Non-RCRA Hazardous Waste Liquid	001	TT	01900	G	State / EPA/Other 223
b.					State N/A / EPA/Other
c.					State / EPA/Other
d.					State / EPA/Other

J. Additional Descriptions for Materials Listed Above
Water Soluble Oil 01%
Lubricating Oil 01%
Water 98%

K. Handling Codes for Wastes Listed Above
a. R-01
b.
c.
d.

15. Special Handling Instructions and Additional Information

USE PROPER PERSONAL PROTECTIVE EQUIPMENT

16.

GENERATOR'S CERTIFICATION: I hereby declare that the contents of this consignment are fully and accurately described above by proper shipping name and are classified, packed, marked, and labeled, and are in all respects in proper condition for transport by highway according to applicable international and national government regulations.

If I am a large quantity generator, I certify that I have a program in place to reduce the volume and toxicity of waste generated to the degree I have determined to be economically practicable and that I have selected the practicable method of treatment, storage, or disposal currently available to me which minimizes the present and future threat to human health and the environment; OR, if I am a small quantity generator, I have made a good faith effort to minimize my waste generation and select the best waste management method that is available to me and that I can afford.

Printed/Typed Name: NANCY A. GIRTEN
Signature: Nancy A. Girten
Month Day Year: 03 21 91

17. Transporter 1 Acknowledgement of Receipt of Materials
Printed/Typed Name: J. DEE STALLCUP
Signature: [signature]
Month Day Year: 03 21 91

18. Transporter 2 Acknowledgement of Receipt of Materials
Printed/Typed Name:
Signature:
Month Day Year:

19. Discrepancy Indication Space

20. Facility Owner or Operator Certification of receipt of hazardous materials covered by this manifest except as noted in Item 19.
Printed/Typed Name: Curt Spaggins
Signature: [signature]
Month Day Year: 03 21 91

GENERATOR / TRANSPORTER / FACILITY

IN CASE OF AN EMERGENCY OR SPILL, CALL THE NATIONAL RESPONSE CENTER 1-800-424-8802; WITHIN CALIFORNIA CALL 1-800-852-7550

00451014

DHS 8022 A (1/88)
EPA 8700—22
(Rev. 9-88) Previous editions are obsolete.

Do Not Write Below This Line

State of California—Health and Welfare Agency
Form Approved OMB No. 2050—0039 (Expires 9-30-91)
Please print or type. Form designed for use on elite (12-pitch typewriter).

See Instructions on Back of Page 6 and Front of Page 7

Department of Health Services
Toxic Substances Control Division
Sacramento, California

UNIFORM HAZARDOUS WASTE MANIFEST

1. Generator's US EPA ID No.: CAD008325334 — Manifest Document No.: 91101110

2. Page 1 of 1

Information in the shaded areas is not required by Federal law.

3. Generator's Name and Mailing Address: Allied-Signal Eletrodynamics Division, 11600 Sherman Way, N. Hollywood CA. 91605

4. Generator's Phone: (818) 503-3214

A. State Manifest Document Number: 90376846

B. State Generator's ID: HAHQ3161-103210617

5. Transporter 1 Company Name: Disposal Control Service Inc — 6. US EPA ID Number: CAT080013414

C. State Transporter's ID: 113033

D. Transporter's Phone: (714) 523-0342

7. Transporter 2 Company Name — 8. US EPA ID Number

E. State Transporter's ID

F. Transporter's Phone

9. Designated Facility Name and Site Address: Oil and Solvent Process Co., 1704 W. First St., Azusa CA. 91702 — 10. US EPA ID Number: CAD008302903

G. State Facility's ID: CAD008302903

H. Facility's Phone: (818) 334-5917

11. US DOT Description (Including Proper Shipping Name, Hazard Class, and ID Number)	12. Containers No.	Type	13. Total Quantity	14. Unit Wt/Vol	I. Waste No.
a. WASTE Petroleum Distillate Flammable Liquid UN 1268 (DOT-35-65)	001	DF	00008	G	State 331; EPA/Other D001
b.					State; EPA/Other
c.					State; EPA/Other
d.					State; EPA/Other

J. Additional Descriptions for Materials Listed Above: 11A) Profile No. K64643

K. Handling Codes for Wastes Listed Above: a. 01 b. c. d.

15. Special Handling Instructions and Additional Information: WEAR APPROPRIATE SAFETY PROTECTION (1x5gal/poly)

Emergency Contact #(714)983-0342

16. **GENERATOR'S CERTIFICATION:** I hereby declare that the contents of this consignment are fully and accurately described above by proper shipping name and are classified, packed, marked, and labeled, and are in all respects in proper condition for transport by highway according to applicable international and national government regulations.

If I am a large quantity generator, I certify that I have a program in place to reduce the volume and toxicity of waste generated to the degree I have determined to be economically practicable and that I have selected the practicable method of treatment, storage, or disposal currently available to me which minimizes the present and future threat to human health and the environment; OR, if I am a small quantity generator, I have made a good faith effort to minimize my waste generation and select the best waste management method that is available to me and that I can afford.

GENERATOR — Printed/Typed Name: Daniel Gutierrez — Signature: [signature] — Month Day Year: 10 31 91

TRANSPORTER

17. Transporter 1 Acknowledgement of Receipt of Materials

Printed/Typed Name: Michael B. VanAlstine — Signature: [signature] — Month Day Year: 10 31 91

18. Transporter 2 Acknowledgement of Receipt of Materials

Printed/Typed Name — Signature — Month Day Year

FACILITY

19. Discrepancy Indication Space

20. Facility Owner or Operator Certification of receipt of hazardous materials covered by this manifest except as noted in item 19.

Printed/Typed Name: MIKE HEDDEN — Signature: [signature] — Month Day Year: 10 31 91

Do Not Write Below This Line

IN CASE OF AN EMERGENCY OR SPILL, CALL THE NATIONAL RESPONSE CENTER 1-800-424-8802; WITHIN CALIFORNIA CALL 1-800-852-7550

303160040

DHS 8022 A
EPA 8700—22
(Rev. 6-89) Previous editions are obsolete.

State of California—Health and Welfare Agency
Form Approved OMB No. 2050—0039 (Expires 9-30-91)
Print or type. (Form designed for use on elite (12-pitch typewriter).

Department of Health Services
Toxic Substances Control Division
Sacramento, California

UNIFORM HAZARDOUS WASTE MANIFEST

1. Generator's US EPA ID No.: CAD008325334 — Manifest Document No.: 91009

2. Page 1 of 1 — Information in the shaded areas is not required by Federal law.

3. Generator's Name and Mailing Address
Allied-Signal Electrodynamics Division
11600 Sherman Way, N. Hollywood, CA 91605

4. Generator's Phone (818) 503-3214

A. State Manifest Document Number: 88457071

B. State Generator's ID: HAH036032067

5. Transporter 1 Company Name: Disposal Control Service, Inc.

6. US EPA ID Number: CAT030034184

C. State Transporter's ID: 113033

D. Transporter's Phone: (800) 824-3345

7. Transporter 2 Company Name:

8. US EPA ID Number:

E. State Transporter's ID:

F. Transporter's Phone:

9. Designated Facility Name and Site Address
Norris Environmental Services
5215 S. Boyle Ave.
Vernon, CA 90058

10. US EPA ID Number: CAD097030993

G. State Facility's ID: CAD097030993

H. Facility's Phone: (213) 588-7111

11. US DOT Description (Including Proper Shipping Name, Hazard Class, and ID Number)	12. Containers No.	Type	13. Total Quantity	14. Unit Wt/Vol	Waste No.
a. RQ Waste Cyanide Solution, n.o.s., Poison B UN 1935 (cyanide rinse) (DOT-E6800)	002	DF	00100	G	State 711 722; EPA/Other F007 D006
b.					State; EPA/Other
c.					State; EPA/Other
d.					State; EPA/Other

J. Additional Descriptions for Materials Listed Above
11 A) Profile No. E1205CNO ERG #55

K. Handling Codes for Wastes Listed Above
a. 15 b.
c. d.

15. Special Handling Instructions and Additional Information
2x55gal poly

USE PROPER PERSONAL PROTECTIVE EQUIPMENT
EMERGENCY CONTACT #(714) 983-0342

16.

GENERATOR'S CERTIFICATION: I hereby declare that the contents of this consignment are fully and accurately described above by proper shipping name and are classified, packed, marked, and labeled, and are in all respects in proper condition for transport by highway according to applicable international and national government regulations.

If I am a large quantity generator, I certify that I have a program in place to reduce the volume and toxicity of waste generated to the degree I have determined to be economically practicable and that I have selected the practicable method of treatment, storage, or disposal currently available to me which minimizes the present and future threat to human health and the environment; OR, if I am a small quantity generator, I have made a good faith effort to minimize my waste generation and select the best waste management method that is available to me and that I can afford.

Printed/Typed Name: NANCY A. GIRTEN — Signature: Nancy A. Girten — Month Day Year: 03 11 91

17. Transporter 1 Acknowledgement of Receipt of Materials
Printed/Typed Name: Michael B. Van Alstine — Signature: Michael B Van Alstine — Month Day Year: 03 11 91

18. Transporter 2 Acknowledgement of Receipt of Materials
Printed/Typed Name: — Signature: — Month Day Year:

19. Discrepancy Indication Space

20. Facility Owner or Operator Certification of receipt of hazardous materials covered by this manifest except as noted in Item 19.
Printed/Typed Name: BI TIN VELASCO — Signature: Bi Tin Velasco — Month Day Year: 03 11 91

GENERATOR — TRANSPORTER — FACILITY

IN CASE OF AN EMERGENCY OR SPILL, CALL THE NATIONAL RESPONSE CENTER 1-800-424-8802; WITHIN CALIFORNIA CALL 1-800-852-7550

HS 8022 A (1/88)
PA 8700—22
Rev. 9-88) Previous editions are obsolete.

Do Not Write Below This Line

State of California—Health and Welfare Agency
Form Approved OMB No. 2050—0039 (Expires 9-30-91)
Please print or type. *(Form designed for use on elite (12-pitch typewriter).*

Department of Health Services
Toxic Substances Control Division
Sacramento, California

UNIFORM HAZARDOUS WASTE MANIFEST

1. Generator's US EPA ID No.: CAD008325334910 08
Manifest Document No.:
2. Page 1 of
Information in the shaded areas is not required by Federal law.

3. Generator's Name and Mailing Address
Allied-Signal Electrodynamics Division
11600 Sherman Way, N. Hollywood, CA 91605
4. Generator's Phone (818 503-3214

A. State Manifest Document Number: 88457070
B. State Generator's ID: HAN036033067
C. State Transporter's ID: 113033
D. Transporter's Phone: (800) 824-3345
E. State Transporter's ID:
F. Transporter's Phone:

5. Transporter 1 Company Name: Disposal Control Service, Inc.
6. US EPA ID Number: CAT030034184
7. Transporter 2 Company Name:
8. US EPA ID Number:

9. Designated Facility Name and Site Address
Norris Environmental Services
5215 S. Boyle Ave.
Vernon, CA 90058
10. US EPA ID Number: CAD097030993

G. State Facility's ID: CAD097030993
H. Facility's Phone: (213) 588-7111

11. US DOT Description (Including Proper Shipping Name, Hazard Class, and ID Number)	12. Containers No.	Type	13. Total Quantity	14. Unit Wt/Vol	I. Waste No.
a. RQ Waste Chromic Acid Solution, Corrosive Material UN 1755 (DOT-E6200)	002	DF	00100	G	State 791 EPA/Other D002
b.					State EPA/Other
c.					State EPA/Other
d.					State EPA/Other

J. Additional Descriptions for Materials Listed Above
11 A) Profile No. E1205CR6

K. Handling Codes for Wastes Listed Above
a. 15
b.
c.
d.

15. Special Handling Instructions and Additional Information
2x55gal poly
USE PROPER PERSONAL PROTECTIVE EQUIPMENT
Emergency Contact #(714)983-0342

16.
GENERATOR'S CERTIFICATION: I hereby declare that the contents of this consignment are fully and accurately described above by proper shipping name and are classified, packed, marked, and labeled, and are in all respects in proper condition for transport by highway according to applicable international and national government regulations.

If I am a large quantity generator, I certify that I have a program in place to reduce the volume and toxicity of waste generated to the degree I have determined to be economically practicable and that I have selected the practicable method of treatment, storage, or disposal currently available to me which minimizes the present and future threat to human health and the environment; OR, if I am a small quantity generator, I have made a good faith effort to minimize my waste generation and select the best waste management method that is available to me and that I can afford.

Printed/Typed Name: NANCY A. GIRTEN
Signature: Nancy A. Girten
Month Day Year: 03 12 91

17. Transporter 1 Acknowledgement of Receipt of Materials
Printed/Typed Name: Michael B. VanAlstine
Signature: Michael B VanAlstine
Month Day Year: 03 12 91

18. Transporter 2 Acknowledgement of Receipt of Materials
Printed/Typed Name:
Signature:
Month Day Year:

19. Discrepancy Indication Space
[illegible]

20. Facility Owner or Operator Certification of receipt of hazardous materials covered by this manifest except as noted in item 19.
Printed/Typed Name: BI TIN VELASCO
Signature: Bi Tin Velasco
Month Day Year: 03 15 91

GENERATOR
TRANSPORTER
FACILITY

IN CASE OF AN EMERGENCY OR SPILL, CALL THE NATIONAL RESPONSE CENTER 1-800-424-8802; WITHIN CALIFORNIA CALL 1-800-852-7550

88457070

DHS 8022 A (1/88)
EPA 8700—22
(Rev. 9-88) Previous editions are obsolete.

Do Not Write Below This Line

State of California—Health and Welfare Agency
Form Approved OMB No. 2050—0039 (Expires 9-30-91)
Please print or type. (Form designed for use on elite (12-pitch typewriter).

7158

Department of Health Services
Toxic Substances Control Division
Sacramento, California

UNIFORM HAZARDOUS WASTE MANIFEST

1. Generator's US EPA ID No.: CAD008325334 — Manifest Document No.: 91007
2. Page 1 of 1 — Information in the shaded areas is not required by Federal law.

3. Generator's Name and Mailing Address: Allied-Signal Electrodynamics Division, 11600 Sherman Way, N. Hollywood, CA 91605
4. Generator's Phone ( ) 818 503-3214
5. Transporter 1 Company Name: Disposal Control Service, Inc.
6. US EPA ID Number: CAT030034184
7. Transporter 2 Company Name:
8. US EPA ID Number:
9. Designated Facility Name and Site Address: Demenno Kerdoon, 2100 N. Alameda, Compton, CA 90222
10. US EPA ID Number: CAT080013362

A. State Manifest Document Number: 88457069
B. State Generator's ID: HAH036032067
C. State Transporter's ID: 113005
D. Transporter's Phone: (800) 824-3345
E. State Transporter's ID:
F. Transporter's Phone:
G. State Facility's ID: CAT080013352
H. Facility's Phone: (213) 537-7100

11. US DOT Description (Including Proper Shipping Name, Hazard Class, and ID Number)	12. Containers No.	Type	13. Total Quantity	14. Unit Wt/Vol	I. Waste No.
a. Waste Petroleum Oil, n.o.s. Combustible Liquid UN 1207 — WATER SOLUBLE OIL LUBRICATING OIL WATER	001	TT	01500	G	State 223 / EPA/Other N/A
b.					State / EPA/Other
c.					State / EPA/Other
d.					State / EPA/Other

J. Additional Descriptions for Materials Listed Above: Water Soluble Oil, Lubricating Oil, Water

K. Handling Codes for Wastes Listed Above: a. R01 b. c. d.

15. Special Handling Instructions and Additional Information: USE PROPER PERSONAL PROTECTIVE EQUIPMENT

24 HR. SER. 818-765 1010
E-G-R-26

16.

GENERATOR'S CERTIFICATION: I hereby declare that the contents of this consignment are fully and accurately described above by proper shipping name and are classified, packed, marked, and labeled, and are in all respects in proper condition for transport by highway according to applicable international and national government regulations.

If I am a large quantity generator, I certify that I have a program in place to reduce the volume and toxicity of waste generated to the degree I have determined to be economically practicable and that I have selected the practicable method of treatment, storage, or disposal currently available to me which minimizes the present and future threat to human health and the environment; OR, if I am a small quantity generator, I have made a good faith effort to minimize my waste generation and select the best waste management method that is available to me and that I can afford.

Printed/Typed Name: NANCY A. GIRTEN — Signature: Nancy A Girten — Month Day Year: 03 11 91

17. Transporter 1 Acknowledgement of Receipt of Materials
Printed/Typed Name: JULIO OCHOA — Signature: Julio Ochoa — Month Day Year: 03 11 91

18. Transporter 2 Acknowledgement of Receipt of Materials
Printed/Typed Name: — Signature: — Month Day Year:

19. Discrepancy Indication Space

20. Facility Owner or Operator Certification of receipt of hazardous materials covered by this manifest except as noted in Item 19.
Printed/Typed Name: James P. Ittes — Signature: [signature] — Month Day Year: 07 11 91

GENERATOR — TRANSPORTER — FACILITY

IN CASE OF AN EMERGENCY OR SPILL, CALL THE NATIONAL RESPONSE CENTER 1-800-424-8802; WITHIN CALIFORNIA CALL 1-800-852-7550

88457069

DHS 8022 A (1/88)
EPA 8700—22
(Rev. 9-88) Previous editions are obsolete.

Do Not Write Below This Line

O/W 03512

State of California—Health and Welfare Agency
Form Approved OMB No. 2050—0039 (Expires 9-30-91) #6611
Please print or type. (Form designed for use on elite (12-pitch typewriter).

Department of Health Services
Toxic Substances Control Division
Sacramento, California

UNIFORM HAZARDOUS WASTE MANIFEST

1. Generator's US EPA ID No.: CAD008325334 — Manifest Document No.: 91006

2. Page 1 of 1

Information in the shaded areas is not required by Federal law.

3. Generator's Name and Mailing Address
Allied-Signal Electrodynamics Division
11600 Sherman Way, N. Hollywood, CA 91605

4. Generator's Phone (818) 503-3214

A. State Manifest Document Number: 88457068

B. State Generator's ID: NAH03603206

5. Transporter 1 Company Name: Disposal Control Service, Inc.

6. US EPA ID Number: CAT030034184

C. State Transporter's ID: 113005

D. Transporter's Phone: (800) 824-3345

7. Transporter 2 Company Name:

8. US EPA ID Number:

E. State Transporter's ID:

F. Transporter's Phone:

9. Designated Facility Name and Site Address
Demenno Kerdoon
2100 N. Alameda
Compton, CA 90222

10. US EPA ID Number: CAT080013352

G. State Facility's ID: CAT080013352

H. Facility's Phone: (213) 537-7100

11. US DOT Description (Including Proper Shipping Name, Hazard Class, and ID Number)	12. Containers No.	Type	13. Total Quantity	Unit Wt/Vol	L Waste No.
a. Waste Coolant Non-RCRA Hazardous Waste Liquid	001	TT	02000	G	State: 223 EPA/Other: N/A
b.					State: EPA/Other:
c.					State: EPA/Other:
d.					State: EPA/Other:

J. Additional Descriptions for Materials Listed Above
Water Soluble Oil
Lubricating Oil
Water
DOT-E 8348

K. Handling Codes for Wastes Listed Above
a. 01
b.
c.
d.

15. Special Handling Instructions and Additional Information

USE PROPER PERSONAL PROTECTIVE EQUIPMENT

16.

GENERATOR'S CERTIFICATION: I hereby declare that the contents of this consignment are fully and accurately described above by proper shipping name and are classified, packed, marked, and labeled, and are in all respects in proper condition for transport by highway according to applicable international and national government regulations.

If I am a large quantity generator, I certify that I have a program in place to reduce the volume and toxicity of waste generated to the degree I have determined to be economically practicable and that I have selected the practicable method of treatment, storage, or disposal currently available to me which minimizes the present and future threat to human health and the environment; OR, if I am a small quantity generator, I have made a good faith effort to minimize my waste generation and select the best waste management method that is available to me and that I can afford.

Printed/Typed Name: NANCY A. GIRTEN — Signature: Nancy A Girten — Month Day Year: 02 26 91

17. Transporter 1 Acknowledgement of Receipt of Materials
Printed/Typed Name: Lori Driggers — Signature: [signature] — Month Day Year: 02 26 91

18. Transporter 2 Acknowledgement of Receipt of Materials
Printed/Typed Name: — Signature: — Month Day Year:

19. Discrepancy Indication Space

20. Facility Owner or Operator Certification of receipt of hazardous materials covered by this manifest except as noted in Item 19.
Printed/Typed Name: Jesse Perras — Signature: [signature] — Month Day Year: 02 26 91

GENERATOR — TRANSPORTER — FACILITY

IN CASE OF AN EMERGENCY OR SPILL, CALL THE NATIONAL RESPONSE CENTER 1-800-424-8802; WITHIN CALIFORNIA CALL 1-800-852-7550

DHS 8022 A (1/88)
EPA 8700—22
(Rev. 9-88) Previous editions are obsolete.

Do Not Write Below This Line

OW 3306

COPY TO GENERATOR WITHIN 30 DAYS

State of California Health and Welfare Agency
Form Approved OMB No. 2050—0039 (Expires 9-30-91)
Please print or type. (Form designed for use on elite (12-pitch typewriter).

Department of Health Services
Toxic Substances Control Division
Sacramento, California

UNIFORM HAZARDOUS WASTE MANIFEST

1. Generator's US EPA ID No.: CAD008325334 — Manifest Document No.: 91005

2. Page 1 of 1

Information in the shaded areas is not required by Federal law.

3. Generator's Name and Mailing Address
Allied-Signal Electrodynamics Division
11600 Sherman Way, N. Hollywood, CA 91605

4. Generator's Phone (818) 503-3214

A. State Manifest Document Number: 88457067

B. State Generator's ID: HAH036032067

5. Transporter 1 Company Name: Disposal Control Service, Inc.
6. US EPA ID Number: CAT030034184

C. State Transporter's ID: 113033

D. Transporter's Phone: (800) 824-3345

7. Transporter 2 Company Name:
8. US EPA ID Number:

E. State Transporter's ID:

F. Transporter's Phone:

9. Designated Facility Name and Site Address
US PCI, Grassy Mountain Facility
3 mi. east, 7 mi. north of Knolls Exit 180
~~Blize~~ Utah
CLIVE, UT
10. US EPA ID Number: UTD991301748

G. State Facility's ID:

H. Facility's Phone: (801) 534-2054

11. US DOT Description (Including Proper Shipping Name, Hazard Class, and ID Number)	12. Containers No.	Type	13. Total Quantity	14. Unit Wt/Vol	I. Waste No.
a. A NON-RCRA Hazardous Waste Solid (chromic acid tank)	002	BA	01000	P	State 181 / EPA/Other N/A
b. B RQ Hazardous Substance Solid, n.o.s. ORM-E NA9188 (asbestos) (DOT-E7768)	001	PF	00050	P	State 151 / EPA/Other N/A
c.					State / EPA/Other
d.					State / EPA/Other

J. Additional Descriptions for Materials Listed Above
11A) Empty Chromic Acid TANK - App# GM 89-2595-89
11B) Asbestos Tile - App# GM 89-2595-89
ERG # 31

K. Handling Codes for Wastes Listed Above
a. 03 b. 03
c. d.

15. Special Handling Instructions and Additional Information
USE PROPER PERSONAL PROTECTIVE EQUIPMENT
24 hr. Emergency Contact # (714) 983-0342
(2x pallets 1x 14 gal poly)

16.
GENERATOR'S CERTIFICATION: I hereby declare that the contents of this consignment are fully and accurately described above by proper shipping name and are classified, packed, marked, and labeled, and are in all respects in proper condition for transport by highway according to applicable international and national government regulations.

If I am a large quantity generator, I certify that I have a program in place to reduce the volume and toxicity of waste generated to the degree I have determined to be economically practicable and that I have selected the practicable method of treatment, storage, or disposal currently available to me which minimizes the present and future threat to human health and the environment; OR, if I am a small quantity generator, I have made a good faith effort to minimize my waste generation and select the best waste management method that is available to me and that I can afford.

Printed/Typed Name: NANCY A. GIRTEN — Signature: Nancy A Girten — Month Day Year: 02/12/91

17. Transporter 1 Acknowledgement of Receipt of Materials
Julio Ochoa - 2-17-91
Printed/Typed Name: Michael B. Van Alstine JULIO OCHOA — Signature: Michael B. Van Alstine — Month Day Year: 02/12/91

18. Transporter 2 Acknowledgement of Receipt of Materials
Printed/Typed Name: — Signature: — Month Day Year:

19. Discrepancy Indication Space

20. Facility Owner or Operator Certification of receipt of hazardous materials covered by this manifest except as noted in Item 19. A-B 91G-2273
Printed/Typed Name: Jenny Bevan — Signature: Jenny Bevan — Month Day Year: 02/18/91

GENERATOR — TRANSPORTER — FACILITY

IN CASE OF AN EMERGENCY OR SPILL, CALL THE NATIONAL RESPONSE CENTER 1-800-424-8802; WITHIN CALIFORNIA CALL 1-800-852-7550

88457067

DHS 8022 A (1/88)
EPA 8700—22
(Rev. 9-88) Previous editions are obsolete.

Do Not Write Below This Line

State of California—Health and Welfare Agency
Form Approved OMB No. 2050—0039 (Expires 9/30-91)
Please print or type. (Form designed for use on elite (12-pitch typewriter).

Department of Health Services
Toxic Substances Control Division
Sacramento, California

UNIFORM HAZARDOUS WASTE MANIFEST

1. Generator's US EPA ID No.: CAD008325334 Manifest Document No.: 91004

2. Page 1 of 1

Information in the shaded areas is not required by Federal law.

3. Generator's Name and Mailing Address
Allied-Signal Electrodynamics Division
11600 Sherman Way, N. Hollywood, CA 91605

4. Generator's Phone (818) 503-3214

A. State Manifest Document Number: 88457066

B. State Generator's ID: NAN036032067

5. Transporter 1 Company Name: Disposal Control Service, Inc.

6. US EPA ID Number: CAT030034184

C. State Transporter's ID: 113033/113087

D. Transporter's Phone: (800) 824-3345

7. Transporter 2 Company Name:

8. US EPA ID Number:

E. State Transporter's ID:

F. Transporter's Phone:

9. Designated Facility Name and Site Address
Norris Environmental Services
5215 S. Boyle Avenue
Vernon, CA 90058

10. US EPA ID Number: CAD097030993

G. State Facility's ID: CVD097030993

H. Facility's Phone: (213) 588-7111

11. US DOT Description (Including Proper Shipping Name, Hazard Class, and ID Number)	12. Containers No.	Type	13. Total Quantity	14. Unit Wt/Vol	I. Waste No.
a. RQ Waste Chromic Acid Solution, Corrosive Material UN 1755 (DOT-E6800)	006	DF	00330	G	State 722 723; EPA/Other 791 D002 D007 D008
b. RQ Hazardous Waste Liquid, n.o.s. ORM-E (Chrome Strip) NA 9189 (DOT-E6800)	006	DF	00330	G	State 121/723; EPA/Other D006 D007 D008
c.					State; EPA/Other
d.					State; EPA/Other

J. Additional Descriptions for Materials Listed Above
11A) E1205CR6 -Chromic Acid Solution - ERG #60
11B) E1205CR7 Chrome Strip - ERG #31
14

K. Handling Codes for Wastes Listed Above
a. 15 b. 15
c. d.

15. Special Handling Instructions and Additional Information
24 Hr. Emergency Contact # (714) 983-0342 (12 x 55 gal poly)
USE PROPER PERSONAL PROTECTIVE EQUIPMENT

16.
GENERATOR'S CERTIFICATION: I hereby declare that the contents of this consignment are fully and accurately described above by proper shipping name and are classified, packed, marked, and labeled, and are in all respects in proper condition for transport by highway according to applicable international and national government regulations.

If I am a large quantity generator, I certify that I have a program in place to reduce the volume and toxicity of waste generated to the degree I have determined to be economically practicable and that I have selected the practicable method of treatment, storage, or disposal currently available to me which minimizes the present and future threat to human health and the environment; OR, if I am a small quantity generator, I have made a good faith effort to minimize my waste generation and select the best waste management method that is available to me and that I can afford.

Printed/Typed Name: NANCY A. GIRTEN Signature: Nancy A. Girten Month Day Year: 01 24 91

17. Transporter 1 Acknowledgement of Receipt of Materials
Printed/Typed Name: Michael B. Van Alstine Signature: Michael B. Van Alstine Month Day Year: 01 24 91

18. Transporter 2 Acknowledgement of Receipt of Materials
Printed/Typed Name: Signature: Month Day Year:

19. Discrepancy Indication Space

20. Facility Owner or Operator Certification of receipt of hazardous materials covered by this manifest except as noted in Item 19.
Printed/Typed Name: BI TIN VELASCO Signature: Bi Tin Velasco Month Day Year: 01 26 91

GENERATOR

TRANSPORTER

FACILITY

IN CASE OF AN EMERGENCY OR SPILL, CALL THE NATIONAL RESPONSE CENTER 1-800-424-8802; WITHIN CALIFORNIA CALL 1-800-852-7550

DHS 8022 A (1/88)
EPA 8700—22
(Rev. 9-88) Previous editions are obsolete.

Do Not Write Below This Line

State of California—Health and Welfare Agency
Form Approved OMB No. 2050—0039 (Expires 9-30-91)
Please print or type. *(Form designed for use on elite (12-pitch typewriter).*

Department of Health Services
Toxic Substances Control Division
Sacramento, California

UNIFORM HAZARDOUS WASTE MANIFEST

1. Generator's US EPA ID No.: CAD008325334 — Manifest Document No.: 91003
2. Page 1 of 1 — Information in the shaded areas is not required by Federal law.

3. Generator's Name and Mailing Address
Allied-Signal Electrodynamics Division
11600 Sherman Way, N. Hollywood, CA 91605

4. Generator's Phone (818) 503-3214

A. State Manifest Document Number: 88457065
B. State Generator's ID: HAHQ 36032067

5. Transporter 1 Company Name: Disposal Control Service, Inc.
6. US EPA ID Number: CAT030034184
C. State Transporter's ID: 113033/113039
D. Transporter's Phone: (800) 824-3345

7. Transporter 2 Company Name:
8. US EPA ID Number:
E. State Transporter's ID:
F. Transporter's Phone:

9. Designated Facility Name and Site Address
Norris Environmental Services
5215 S. Boyle Avenue
Vernon, CA 90058

10. US EPA ID Number: CAD097030993
G. State Facility's ID: CAD097030993
H. Facility's Phone: (213) 588-7111

11. US DOT Description (Including Proper Shipping Name, Hazard Class, and ID Number)	12. Containers No.	Type	13. Total Quantity	14. Unit Wt/Vol	I. Waste No.
a. RQ Waste Cyanide Solution, n.o.s. Poison B UN1935 (Cadmium Cyanide Bath) (DOT-E7768)	004	DF	00020	G	State 711 : 121; EPA/Other D002; F007; D006
b. RQ Waste Hypochlorite Soultion ORM-B NA1791 (Sodium Hypochlorite Neutralization Solution) (DOT-E6800)	006	DF	00330	G	State 722 : 181; EPA/Other D006
c.					State; EPA/Other
d.					State; EPA/Other

J. Additional Descriptions for Materials Listed Above
11A) E1205CN1 ERG #55
11B) E1205CN9 ERG #60

K. Handling Codes for Wastes Listed Above
a. 15 b. 15
c. d.

15. Special Handling Instructions and Additional Information
WEAR APPROPRIATE SAFETY PROTECTION (10 x 55 gal poly)
24 hr Emergency Contact #(714)923-0342

16.
GENERATOR'S CERTIFICATION: I hereby declare that the contents of this consignment are fully and accurately described above by proper shipping name and are classified, packed, marked, and labeled, and are in all respects in proper condition for transport by highway according to applicable international and national government regulations.

If I am a large quantity generator, I certify that I have a program in place to reduce the volume and toxicity of waste generated to the degree I have determined to be economically practicable and that I have selected the practicable method of treatment, storage, or disposal currently available to me which minimizes the *present and future threat to human health and the environment;* OR, *if I am a small quantity generator, I have made a good faith effort to minimize my waste* generation and select the best waste management method that is available to me and that I can afford.

Printed/Typed Name: NANCY A GIRTEN — Signature: Nancy A Girten — Month Day Year: 02 07 91

17. Transporter 1 Acknowledgement of Receipt of Materials
Printed/Typed Name: Michael B. Van Alstine — Signature: Michael B. Van Alstine — Month Day Year: 02 07 91

18. Transporter 2 Acknowledgement of Receipt of Materials
Printed/Typed Name: — Signature: — Month Day Year:

19. Discrepancy Indication Space

20. Facility Owner or Operator Certification of receipt of hazardous materials covered by this manifest except as noted in Item 19.
Printed/Typed Name: C. TABACON — Signature: [signature] — Month Day Year: 02 11 91

GENERATOR — TRANSPORTER — FACILITY

IN CASE OF AN EMERGENCY OR SPILL, CALL THE NATIONAL RESPONSE CENTER 1-800-424-8802; WITHIN CALIFORNIA CALL 1-800-852-7550

88457065

DHS 8022 A (1/88)
EPA 8700—22
(Rev. 9-88) Previous editions are obsolete.

Do Not Write Below This Line

DNR
MICHIGAN DEPARTMENT OF NATURAL RESOURCES

DO NOT WRITE IN THIS SPACE
ATT. ☐ DIS. ☐ REJ. ☐ PR. ☐

Required under authority of Act 64, P.A. 1979, as amended and Act 136, P.A. 1969.

Failure to file is punishable under section 299.548 MCL or Section 10 of Act 136, P.A. 1969.

Please print or type

Form Approved. OMB No. 2050-0039 Expires 9-30-91

UNIFORM HAZARDOUS WASTE MANIFEST

1. Generator's US EPA ID No. CAD008325314 Manifest Document No. 91002

2. Page 1 of 1

Information in the shaded areas is not required by Federal law.

3. Generator's Name and Mailing Address
[illegible]

4. Generator's Phone (818) 503-3214

A. State Manifest Document Number MI 2151625

B. State Generator's ID IAHQ36-032067

5. Transporter 1 Company Name: Dayco Cartel Service Inc

6. US EPA ID Number: CAT080034184

C. State Transporter's ID 113155

D. Transporter's Phone (714) [illegible]

7. Transporter 2 Company Name

8. US EPA ID Number

E. State Transporter's ID

F. Transporter's Phone

9. Designated Facility Name and Site Address
Cyanotem
12221 Inkster Highway
Detroit MI 48227

10. US EPA ID Number: MID078019912

G. State Facility's ID

H. Facility's Phone 933-1850 (313) 353-5220

11. US DOT Description (including Proper Shipping Name, Hazard Class, and ID NUMBER).

	HM	11. US DOT Description	12. Containers No.	Type	13. Total Quantity	14. Unit Wt/Vol	I. Waste No.	N/H
a.	X	RQ Hazardous Waste Solid, NOS (Cyanide) NA 1179 RQ (Cyanide and Dilute) (DOT-E 7768)	001	DF	02210	P	D003 F008	H
b.								
c.	X	Hazardous Waste Solid, NOS (Cadmium Fumes) NA 1179 RQ (Cadmium Fumes) (DOT-E 7768)	001	DF	00150	P	D006	H
d.								

J. Additional Descriptions for Materials Listed Above
HR) Cyanide Contaminated Debris ERG #31
Approval # CIL059/WIS157
HC) Cadmium Fumes
Approval # CIL059/WIS159 ERG #31

K. Handling Codes for Wastes Listed Above
a) /
b) /
c) /
d) /

15. Special Handling Instructions and Additional Information
(2x Secondary)
Write Shipper Site Specific Protocols 24 hr Emergency Contact #[illegible]

16. GENERATOR'S CERTIFICATION: I hereby declare that the contents of this consignment are fully and accurately described above by proper shipping name and are classified, packed, marked, and labeled, and are in all respects in proper condition for transport by highway according to applicable international and national government regulations.

If I am a large quantity generator, I certify that I have a program in place to reduce the volume and toxicity of waste generated to the degree I have determined to be economically practicable and that I have selected the practicable method of treatment, storage, or disposal currently available to me which minimizes the present and future threat to human health and the environment; OR; if I am a small quantity generator, I have made a good faith effort to minimize my waste generation and select the best waste management method that is available to me and that I can afford.

Printed/Typed Name: Scott A. Myl
Signature: [signature]
Date: Month 9 Day 1 Year 91

17. Transporter 1 Acknowledgement of Receipt of Materials
Printed/Typed Name: Michael B. VanAlstine / Don Wetzel
Signature: [signature]
Date: Month 02 Day 12 Year 91

18. Transporter 2 Acknowledgement or Receipt of Materials
Printed/Typed Name:
Signature:
Date: Month Day Year

19. Discrepancy Indication Space
Call Hon. 933-1850
N/A [illegible] Requirements
19153

20. Facility Owner or Operator: Certification of receipt of hazardous materials covered by this manifest except as noted in Item 19.
Printed/Typed Name: J. M. Antoni
Signature: [signature]
Date: Month 02 Day 26 Year 91

GENERATOR

TRANSPORTER

FACILITY

ALL SPILLS MUST BE REPORTED TO THE MICHIGAN POLLUTION EMERGENCY ALERTING SYSTEM, IN MICHIGAN AT 1-800-292-4706 OR OUT OF STATE AT 517-373-7660 AND THE NATIONAL RESPONSE CENTER AT 1-800-424-8802 24 HOURS PER DAY.

EPA Form 8700-22 (Rev. 9/88)

PR 5110 Rev. 4/90

GENERATOR 2nd COPY

State of California—Health and Welfare Agency
Form Approved OMB No. 2050—0039 (Expires 9-30-91)
Please print or type. *(Form designed for use on elite (12-pitch typewriter).*

Department of Health Services
Toxic Substances Control Division
Sacramento, California

UNIFORM HAZARDOUS WASTE MANIFEST

1. Generator's US EPA ID No. CAD008325334 — Manifest Document No. 91013

2. Page 1 of 1

Information in the shaded areas is not required by Federal law.

3. Generator's Name and Mailing Address
Allied-Signal Electrodynamics Division
11600 Sherman Way, N. Hollywood, CA 91605

4. Generator's Phone (818) 503-3214

A. State Manifest Document Number 88457077

B. State Generator's ID HAH036032067

5. Transporter 1 Company Name: Oil and Solvent Process Co.

6. US EPA ID Number: CAD008302903

C. State Transporter's ID 11551

D. Transporter's Phone (818) 334-5117

7. Transporter 2 Company Name

8. US EPA ID Number

E. State Transporter's ID

F. Transporter's Phone

9. Designated Facility Name and Site Address
Oil and Solvent Process Co.
1704 W. First St.
Azusa, CA 91702

10. US EPA ID Number: CAD008302903

G. State Facility's ID CAD008302903

H. Facility's Phone (818) 334-5117

11. US DOT Description (Including Proper Shipping Name, Hazard Class, and ID Number)	12. Containers No.	Type	13. Total Quantity	14. Unit Wt/Vol	I. Waste No.
a. RQ Waste 1,1,1 Trichloroethane ORM-A UN2831 (F001)	014	DM	012010	G	State 211 / EPA/Other F001
b. RQ Waste Flammable Liquid, NOS, Flammable Liquid, UN1993 (Red Oil and Heptane)	003	DM	00050	G	State 214 / EPA/Other D001
c. RQ Waste Heptane, Flammable Liquid UN1206	001	DM	00050	G	State 213 / EPA/Other D001
d.					State / EPA/Other

J. Additional Descriptions for Materials Listed Above
11 A) G 93094
11 B) F 28556
11 C) F 28557

K. Handling Codes for Wastes Listed Above
a. 01 b. 01 c. 01 d.

15. Special Handling Instructions and Additional Information
USE PROPER PERSONAL PROTECTIVE EQUIPMENT (818) 765-1010

16. GENERATOR'S CERTIFICATION: I hereby declare that the contents of this consignment are fully and accurately described above by proper shipping name and are classified, packed, marked, and labeled, and are in all respects in proper condition for transport by highway according to applicable international and national government regulations.

If I am a large quantity generator, I certify that I have a program in place to reduce the volume and toxicity of waste generated to the degree I have determined to be economically practicable and that I have selected the practicable method of treatment, storage, or disposal currently available to me which minimizes the present and future threat to human health and the environment; OR, if I am a small quantity generator, I have made a good faith effort to minimize my waste generation and select the best waste management method that is available to me and that I can afford.

Printed/Typed Name: NANCY A. GIRTEN — Signature: Nancy A. Girten — Month Day Year: 040991

17. Transporter 1 Acknowledgement of Receipt of Materials
Printed/Typed Name: ED GUERRERO — Signature: Ed Guerrero — Month Day Year: 040991

18. Transporter 2 Acknowledgement of Receipt of Materials
Printed/Typed Name — Signature — Month Day Year

19. Discrepancy Indication Space

20. Facility Owner or Operator Certification of receipt of hazardous materials covered by this manifest except as noted in Item 19.
Printed/Typed Name: MIKE HEDDEN — Signature — Month Day Year: 040991

GENERATOR — TRANSPORTER — FACILITY

IN CASE OF AN EMERGENCY OR SPILL, CALL THE NATIONAL RESPONSE CENTER 1-800-424-8802; WITHIN CALIFORNIA CALL 1-800-852-7550

88457077

Do Not Write Below This Line

DHS 8022 A (1/88)
EPA 8700—22
(Rev. 9-88) Previous editions are obsolete.

WHITE — TO THIS COPY TO GENERATOR WITHIN 30 DAYS

State of California—Health and Welfare Agency
Form Approved OMB No. 2050-0039 (Expires 9-30-91)
Please print or type. *(Form designed for use on elite (12-pitch typewriter).*

Department of Health Services
Toxic Substances Control Division
Sacramento, California

UNIFORM HAZARDOUS WASTE MANIFEST

1. Generator's US EPA ID No. CAD008325334 — Manifest Document No. 91001

2. Page 1 of 1

Information in the shaded areas is not required by Federal law.

3. Generator's Name and Mailing Address
Allied-Sig nal Electrodynamics Division
11600 Sherman Way, N. Hollywood, CA 91605

4. Generator's Phone (818) 503-3214

A. State Manifest Document Number 88457063

B. State Generator's ID NAN036032067

5. Transporter 1 Company Name: Oil & Solvent Process Co.

6. US EPA ID Number: CAD008302903

C. State Transporter's ID 11/551

D. Transporter's Phone (818) 334-5117

7. Transporter 2 Company Name

8. US EPA ID Number

E. State Transporter's ID

F. Transporter's Phone

9. Designated Facility Name and Site Address
Oil & Solvent Process Co.
1704 W. First St.
Azuda, CA 91702

10. US EPA ID Number: CAD008302903

G. State Facility's ID CAD008302903

H. Facility's Phone (818) 334-5117

11. US DOT Description (Including Proper Shipping Name, Hazard Class, and ID Number)	12. Containers No.	Type	13. Total Quantity	14. Unit Wt/Vol	I. Waste No.
a. RQ Waste 1,1,1 Trichloroethane ORM-A UN2831	003	DF	00165	G	State 211 / EPA/Other F001
~~b. Waste Petroleum Distillate, Flammable Liquid UN1268~~	~~001~~	~~DF~~	~~00005~~	~~G~~	~~State 331 / EPA/Other D001~~
c. RQ Waste Heptane, Flammable Liquid UN1206	001	DF	00055	G	State 213 / EPA/Other D001
d.					State / EPA/Other

J. Additional Descriptions for Materials Listed Above
11A) G 93094
~~11B) K 64643~~
11C) F 28557

K. Handling Codes for Wastes Listed Above
a. 01 b.
c. 01 d.

15. Special Handling Instructions and Additional Information
USE PROPER PERSONAL PROTECTIVE EQUIPMENT (818) 503-3400

16. GENERATOR'S CERTIFICATION: I hereby declare that the contents of this consignment are fully and accurately described above by proper shipping name and are classified, packed, marked, and labeled, and are in all respects in proper condition for transport by highway according to applicable international and national government regulations.

If I am a large quantity generator, I certify that I have a program in place to reduce the volume and toxicity of waste generated to the degree I have determined to be economically practicable and that I have selected the practicable method of treatment, storage, or disposal currently available to me which minimizes the present and future threat to human health and the environment; OR, if I am a small quantity generator, I have made a good faith effort to minimize my waste generation and select the best waste management method that is available to me and that I can afford.

Printed/Typed Name: NANCY A. SIRTEN — Signature: Nancy A Sirten — Month Day Year 10/23/91

17. Transporter 1 Acknowledgement of Receipt of Materials
Printed/Typed Name: Mark Jeris — Signature: Mark Jeris — Month Day Year 10/23/91

18. Transporter 2 Acknowledgement of Receipt of Materials
Printed/Typed Name — Signature — Month Day Year

19. Discrepancy Indication Space

20. Facility Owner or Operator Certification of receipt of hazardous materials covered by this manifest except as noted in Item 19.
Printed/Typed Name: MIKE HEDDEN — Signature: Mike Hedden — Month Day Year 10/23/91

GENERATOR — TRANSPORTER — FACILITY

IN CASE OF AN EMERGENCY OR SPILL, CALL THE NATIONAL RESPONSE CENTER 1-800-424-8802; WITHIN CALIFORNIA CALL 1-800-852-7550

00451003

Do Not Write Below This Line

DHS 8022 A (1/88)
EPA 8700—22
(Rev. 9-88) Previous editions are obsolete.

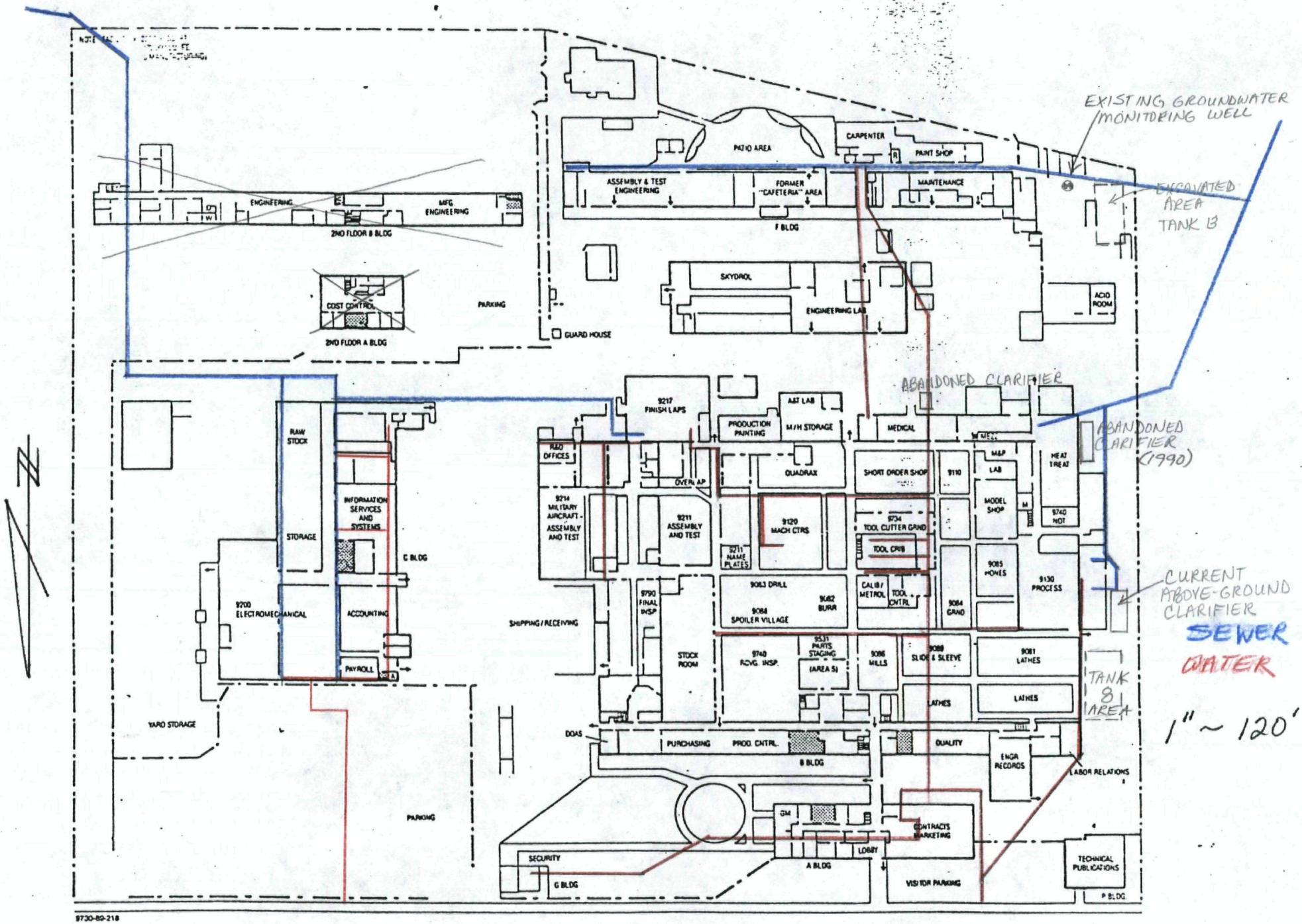
EXISTING GROUNDWATER MONITORING WELL
EXCAVATED AREA TANK 13
ABANDONED CLARIFIER
ABANDONED CLARIFIER (1990)
CURRENT ABOVE-GROUND CLARIFIER
SEWER
WATER
TANK 8 AREA
1" ~ 120'
PATIO AREA
CARPENTER
PAINT SHOP
ASSEMBLY & TEST ENGINEERING
FORMER "CAFETERIA" AREA
MAINTENANCE
F BLDG
ENGINEERING
MFG. ENGINEERING
2ND FLOOR B BLDG
COST CONTROL
2ND FLOOR A BLDG
PARKING
GUARD HOUSE
SKYDROL
ENGINEERING LAB
ACID ROOM
9217 FINISH LAPS
A&T LAB
PRODUCTION PAINTING
M/H STORAGE
MEDICAL
WELL
M&P LAB
HEAT TREAT
RAW STOCK
R&D OFFICES
OVERLAP
QUADRAX
SHORT ORDER SHOP
9110
MODEL SHOP
9740 NDT
INFORMATION SERVICES AND SYSTEMS
9214 MILITARY AIRCRAFT ASSEMBLY AND TEST
9211 ASSEMBLY AND TEST
9120 MACH CTRS
9734 TOOL CUTTER GRND
TOOL CRIB
9211 NAME PLATES
STORAGE
C BLDG
9085 HONES
9130 PROCESS
9790 FINAL INSP
9083 DRILL
9082 BURR
CALIB/ METROL
TOOL CNTRL
9084 GRND
9200 ELECTROMECHANICAL
ACCOUNTING
9084 SPOILER VILLAGE
SHIPPING/RECEIVING
STOCK ROOM
9740 RCVG. INSP.
9531 PARTS STAGING (AREA 5)
9086 MILLS
9089 SLIDE & SLEEVE
9081 LATHES
LATHES
LATHES
PAYROLL
YARD STORAGE
DOAS
PURCHASING
PROD. CNTRL.
B BLDG
QUALITY
ENGR RECORDS
LABOR RELATIONS
PARKING
GM
CONTRACTS MARKETING
LOBBY
SECURITY
A BLDG
G BLDG
VISITOR PARKING
TECHNICAL PUBLICATIONS
P BLDG
9730-89-218

14, 6

041001

State of California—Health and Welfare Agency
Form Approved OMB No. 2050—0039 (Expires 9-30-91)
Please print or type. (Form designed for use on elite (12-pitch typewriter).

#4691 1990 11

Department of Health Services
Toxic Substances Control Division
Sacramento, California

UNIFORM HAZARDOUS WASTE MANIFEST

1. Generator's US EPA ID No. CAD008325334 — Manifest Document No. 90038

2. Page 1 of 1

Information in the shaded areas is not required by Federal law.

3. Generator's Name and Mailing Address
Allied-Signal Electrodynamics Division
11600 Sherman Way, N. Hollywood 91605

4. Generator's Phone (818 503-3214

A. State Manifest Document Number 88457061

B. State Generator's ID HAHQ360320 67

5. Transporter 1 Company Name: Disposal Control Service, Inc. — 6. US EPA ID Number: CAT030034184

C. State Transporter's ID 112146

D. Transporter's Phone 800-824-3346

7. Transporter 2 Company Name — 8. US EPA ID Number

E. State Transporter's ID

F. Transporter's Phone

9. Designated Facility Name and Site Address
Demenno Kerdoon
2100 N. Alameda
Compton, CA 90222

10. US EPA ID Number: CAT080013352

G. State Facility's ID CAT080013352

H. Facility's Phone (213) 537-7100

11. US DOT Description (Including Proper Shipping Name, Hazard Class, and ID Number)	12. Containers No.	Type	13. Total Quantity	14. Unit Wt/Vol	I. Waste No.
a. Waste Coolant Non-RCRA Hazardous Waste Liquid	001	TT	01500	G	State 223 EPA/Other N/A
b.					State EPA/Other
c.					State EPA/Other
d. DOT-E 7476					State EPA/Other

J. Additional Descriptions for Materials Listed Above
Water Soluble Oil
Lubricating Oil
Water

K. Handling Codes for Wastes Listed Above
a. P-01 b.
c. d.

15. Special Handling Instructions and Additional Information
USE PROPER PERSONAL PROTECTIVE EQUIPMENT

16. GENERATOR'S CERTIFICATION: I hereby declare that the contents of this consignment are fully and accurately described above by proper shipping name and are classified, packed, marked, and labeled, and are in all respects in proper condition for transport by highway according to applicable international and national government regulations.

If I am a large quantity generator, I certify that I have a program in place to reduce the volume and toxicity of waste generated to the degree I have determined to be economically practicable and that I have selected the practicable method of treatment, storage, or disposal currently available to me which minimizes the present and future threat to human health and the environment; OR, if I am a small quantity generator, I have made a good faith effort to minimize my waste generation and select the best waste management method that is available to me and that I can afford.

Printed/Typed Name: NANCY A. GIRTEN Robert Peters — Signature — Month Day Year 1 12 21 90

17. Transporter 1 Acknowledgement of Receipt of Materials
Printed/Typed Name: DAVE DADE — Signature — Month Day Year 1 12 21 90

18. Transporter 2 Acknowledgement of Receipt of Materials
Printed/Typed Name — Signature — Month Day Year

19. Discrepancy Indication Space

20. Facility Owner or Operator Certification of receipt of hazardous materials covered by this manifest except as noted in Item 19.
Printed/Typed Name: CARL SPAGGIAR — Signature — Month Day Year 1 12 21 90

GENERATOR — TRANSPORTER — FACILITY

IN CASE OF AN EMERGENCY OR SPILL, CALL THE NATIONAL RESPONSE CENTER 1-800-424-8802; WITHIN CALIFORNIA CALL 1-800-852-7550

88457061

Do Not Write Below This Line

DHS 8022 A (1/88)
EPA 8700—22
(Rev. 9-88) Previous editions are obsolete.

Yellow: TSDF SENDS THIS COPY TO GENERATOR WITHIN 30 DAYS

041003

State of California—Health and Welfare Agency
Form Approved OMB No. 2050—0039 (Expires 9-30-9[illegible]) "3544"
Please print or type. (Form designed for use on elite (12-pitch typewriter).

Department of Health Services
Toxic Substances Control Division
Sacramento, California

UNIFORM HAZARDOUS WASTE MANIFEST

1. Generator's US EPA ID No.: CAD008325334 Manifest Document No.: 90037

2. Page 1 of

Information in the shaded areas is not required by Federal law.

3. Generator's Name and Mailing Address
Allied-Signal Electrodynamics Division
11600 Sherman Way, N. Hollywood, CA 91605

4. Generator's Phone (818) 503-3214

A. State Manifest Document Number: 88457058

B. State Generator's ID: NAH03603206[illegible]

5. Transporter 1 Company Name: Disposal Control Service, Inc.
6. US EPA ID Number: CAT030034184

C. State Transporter's ID: 11346

D. Transporter's Phone: 800-[illegible]

7. Transporter 2 Company Name
8. US EPA ID Number

E. State Transporter's ID

F. Transporter's Phone

9. Designated Facility Name and Site Address
Demenno Kerdoon
2100 N. Alameda St.
Compton, CA 90222

10. US EPA ID Number: CAT080013352

G. State Facility's ID

H. Facility's Phone: (213) 537-7100

11. US DOT Description (Including Proper Shipping Name, Hazard Class, and ID Number)	12. Containers No.	Type	13. Total Quantity	Unit Wt/Vol	Waste No.
a. Waste Petroleum Oil, n.o.s. Combustible Liquid UN 1270	001	TT	01100	G	State; EPA/Other 221
b.					State N/A; EPA/Other
c.					State; EPA/Other
d.					State; EPA/Other

J. Additional Descriptions for Materials Listed Above
Water Soluble Oil 2%
Lubricating Oil 20%
Hydraulic Oil 60%
Water 28%

K. Handling Codes for Wastes Listed Above
a. 01
b.
c.
d.

15. Special Handling Instructions and Additional Information

USE PROPER PERSONAL PROTECTIVE EQUIPMENT

16.

GENERATOR'S CERTIFICATION: I hereby declare that the contents of this consignment are fully and accurately described above by proper shipping name and are classified, packed, marked, and labeled, and are in all respects in proper condition for transport by highway according to applicable international and national government regulations.

If I am a large quantity generator, I certify that I have a program in place to reduce the volume and toxicity of waste generated to the degree I have determined to be economically practicable and that I have selected the practicable method of treatment, storage, or disposal currently available to me which minimizes the present and future threat to human health and the environment; OR, if I am a small quantity generator, I have made a good faith effort to minimize my waste generation and select the best waste management method that is available to me and that I can afford.

Printed/Typed Name	Signature	Month Day Year
NANCY A. GIRTEN	Nancy A Girten	12 03 90

17. Transporter 1 Acknowledgement of Receipt of Materials

Printed/Typed Name	Signature	Month Day Year
DAVE DADE	Dave Dade	12 03 90

18. Transporter 2 Acknowledgement of Receipt of Materials

Printed/Typed Name	Signature	Month Day Year

19. Discrepancy Indication Space

20. Facility Owner or Operator Certification of receipt of hazardous materials covered by this manifest except as noted in Item 19.

Printed/Typed Name	Signature	Month Day Year
Roy Cooray	Roy Cooray	12 03 90

GENERATOR

TRANSPORTER

FACILITY

88457058

IN CASE OF AN EMERGENCY OR SPILL, CALL THE NATIONAL RESPONSE CENTER 1-800-424-8802; WITHIN CALIFORNIA CALL 1-800-852-7550

DHS 8022 A (1/88)
EPA 8700—22
(Rev. 9-88) Previous editions are obsolete.

Do Not Write Below This Line

Yellow: TSDF SENDS THIS COPY TO GENERATOR WITHIN 30 DAYS

State of California—Health and Welfare Agency
Form Approved OMB No. 2050—0039 (Expires 9-30-9[illegible])
Please print or type. (Form designed for use on elite[illegible]itch typewriter).

Department of Health
Toxic Substances Control
Sacramento, Ca[illegible]

UNIFORM HAZARDOUS WASTE MANIFEST

1. Generator's US EPA ID No.: CAD008325334
Manifest Document No.: 90036
2. Page 1 of 1
Information in the shaded areas is not required by Federal law.

3. Generator's Name and Mailing Address
Allied-Signal Electrodynamics Division
11600 Sherman Way, N. Hollywood, CA 91605
4. Generator's Phone (818 503-3214

A. State Manifest Document Number: 88457057
B. State Generator's ID: HAH036032067

5. Transporter 1 Company Name: Disposal Control Services, Inc.
6. US EPA ID Number: CAT030034184
C. State Transporter's ID: 113067
D. Transporter's Phone: 800-824-3345

7. Transporter 2 Company Name:
8. US EPA ID Number:
E. State Transporter's ID:
F. Transporter's Phone:

9. Designated Facility Name and Site Address
Norris Environmental Services
5215 S. Boyle Avenue
Vernon, CA 90058
10. US EPA ID Number: CAD097030993
G. State Facility's ID: CAD097030993
H. Facility's Phone: (213) 588-7111

11. US DOT Description (Including Proper Shipping Name, Hazard Class, and ID Number)	12. Containers No.	Type	13. Total Quantity	14. Unit Wt/Vol	I. Waste No.
a. RQ Waste Cyanide Solution n.o.s. Poison B UN 1935	009	DF	00465	G	State 711 / EPA/Other F007
b.					State / EPA/Other
c.					State / EPA/Other
d.					State / EPA/Other

J. Additional Descriptions for Materials Listed Above
II A) PROFILE NO. E1205CNO

K. Handling Codes for Wastes Listed Above
a. 15
b.
c.
d.

15. Special Handling Instructions and Additional Information
USE PROPER PERSONAL PROTECTIVE EQUIPMENT

(9x55)

16.
GENERATOR'S CERTIFICATION: I hereby declare that the contents of this consignment are fully and accurately described above by proper shipping name and are classified, packed, marked, and labeled, and are in all respects in proper condition for transport by highway according to applicable international and national government regulations.

If I am a large quantity generator, I certify that I have a program in place to reduce the volume and toxicity of waste generated to the degree I have determined to be economically practicable and that I have selected the practicable method of treatment, storage, or disposal currently available to me which minimizes the present and future threat to human health and the environment; OR, if I am a small quantity generator, I have made a good faith effort to minimize my waste generation and select the best waste management method that is available to me and that I can afford.

Printed/Typed Name: Nancy A. Girten
Signature: Nancy A Girten
Month Day Year: 12 11 90

17. Transporter 1 Acknowledgement of Receipt of Materials
Printed/Typed Name: Robert Gonzalez
Signature: Robert Gonzalez
Month Day Year: 12 11 90

18. Transporter 2 Acknowledgement of Receipt of Materials
Printed/Typed Name:
Signature:
Month Day Year:

19. Discrepancy Indication Space

20. Facility Owner or Operator Certification of receipt of hazardous materials covered by this manifest except as noted in Item 19.
Printed/Typed Name: BI TIN VELASCO
Signature: Bi Tin Velasco
Month Day Year: 12 13 90

GENERATOR / TRANSPORTER / FACILITY

IN CASE OF AN EMERGENCY OR SPILL, CALL THE NATIONAL RESPONSE CENTER 1-800-424-8802; WITHIN CALIFORNIA CALL 1-800-852-7550

88457057

S 8022 A (1/88)
8700—22
(9-88) Previous editions are obsolete.

Do Not Write Below This Line

Yellow: TSDF SENDS THIS COPY TO GENERATOR WITHIN 30 DAYS

STATE OF ARKANSAS
Department of Pollution Control and Ecology
P. O. Box 9583 Little Rock, Arkansas 72219
Telephone 501-562-7444

1

Please print or type (Form designed for use on elite (12-pitch) typewriter.)

Form Approved. OMB No. 2050-0039. Expires 9-30-91

AR 2-90

UNIFORM HAZARDOUS WASTE MANIFEST

1. Generator's US EPA ID No. C A D 0 0 8 3 2 5 3 3 4 9 Manifest Document No. 0 0 3 5

2. Page 1 of 2 — Information in the shaded areas is not required by Federal law.

3. Generator's Name and Mailing Address
Allied-Signal Electrodynamics Division
11600 Sherman Way, N. Hollywood, CA 91605

4. Generator's Phone (818) 503-3214

A. State Manifest Document Number
AR- 449518

B. State Generator's ID
HAHQ 36032067

5. Transporter 1 Company Name
Disposal Control Service, Inc.

6. US EPA ID Number
C A T 0 0 0 3 4 1 8 4

C. State Transporter's ID PC 1044 H 376

D. Transporter's Phone (800) 824-3345

7. Transporter 2 Company Name

8. US EPA ID Number

E. State Transporter's ID PC H

F. Transporter's Phone

9. Designated Facility Name and Site Address
Ensco, Inc.
American Road
El Dorado, AR 71730

10. US EPA ID Number
A R D 0 6 9 7 4 8 1 9 2

G. State Facility's ID

H. Facility's Phone (501) 223-1100

GENERATOR

11. US DOT Description (Including Proper Shipping Name, Hazard Class, and ID Number)	12. Containers No.	Type	13. Total Quantity	14. Unit Wt/Vol	I. Waste No.
a. Waste RQ Corrosive Liquid n.o.s., Corrosive MATERIAL (HYDROCHLORIC ACID & OIL) UN 1760 DOT-E 7768	0 0 1	D F	0 0 0 5 5	G	D002, D006 D007, D008
b. Soil and Oil NON-RCRA Hazardous Waste Solid (Motor Oil Contaminated Soil)	0 0 1	D F	0 0 2 5 0	P	NR N/A
c. Waste Polymeric Diphenylmethane Diisocyanate (Instapak) UN 2489	0 0 2	D M	0 0 2 0 0	P	NR N/A
d. RQ Waste Paint Related Material, Flammable Liquid (Paint Stripper) DOT-E 7768 NA 1263	0 0 1	D F	0 0 0 5 5	G	~~343~~ D001

J. Additional Descriptions for Materials Listed Above
11A) Profile # 142719 11C) Profile # 142718
11B) Profile # 142721 11D) Profile # 142720
11a - 443* 11c - 439*
if no alternate TSDF, return to generator 11b - 558* 11d - 222*

K. Handling Codes for Wastes Listed Above

EMERGENCY RESPONSE INFORMATION
Disposal Control Service Inc.
(714) 983-0342

15. Special Handling Instructions and Additional Information
USE PROPER PERSONAL PROTECTIVE EQUIPMENT
LOAD# 61935 ~~61395~~

16. **GENERATOR'S CERTIFICATION:** I hereby declare that the contents of this consignment are fully and accurately described above by proper shipping name and are classified, packed, marked, and labeled, and are in all respects in proper condition for transport by highway according to applicable International and national government regulations and Arkansas state regulations.
If I am a large quantity generator, I certify that I have a program in place to reduce the volume and toxicity of waste generated to the degree I have determined to be economically practicable and that I have selected the practicable method of treatment, storage, or disposal currently available to me which minimizes the present and future threat to human health and the environment; OR, if I am a small quantity generator, I have made a good faith effort to minimize my waste generation and select the best waste management method that is available to me and that I can afford.

Printed/Typed Name: NANCY A. SIRTEN Signature: Nancy A Sirten Month Day Year 1 1 1 3 9 0

TRANSPORTER

17. Transporter 1 Acknowledgement of Receipt of Materials
Printed/Typed Name: MICHAEL B. VAN ALSTINE Signature: Michael B Van Alstine Month Day Year 1 1 1 3 90

18. Transporter 2 Acknowledgement of Receipt of Materials
Printed/Typed Name Signature Month Day Year

FACILITY

19. Discrepancy Indication Space
Added NR to Block I Documentation on file

20. Facility Owner or Operator: Certification of receipt of hazardous materials covered by this manifest except as noted in Item 19.
Printed/Typed Name: Jimmy Massey Signature: Jimmy Massey Month Day Year 1 1 1 3 2 0 9 0

EPA Form 8700-22 (Rev. 9-88) Previous edition is obsolete.

NOTICE: THE ORIGINAL AND NOT LESS THAN TWO (2) COPIES MUST MOVE WITH THE HAZARDOUS WASTE SHIPMENT. ONCE DELIVERED, THE TREAT

State of California—Health and Welfare Agency
Form Approved OMB No. 2050—0039 (Expires 9-30-91)
Please print or type. (Form designed for use on elite pitch typewriter).

3811

Department of Health Services
Toxic Substances Control Division
Sacramento, California

UNIFORM HAZARDOUS WASTE MANIFEST

1. Generator's US EPA ID No.: CAD008325334 | Manifest Document No.: 90034

2. Page 1 of

Information in the shaded areas is not required by Federal law.

3. Generator's Name and Mailing Address
Allied-Signal Electrodynamics Division
11600 Sherman Way, N. Hollywood, CA 91605

4. Generator's Phone (818) 503-3214

A. State Manifest Document Number: 88457056

B. State Generator's ID: HAN036032057

5. Transporter 1 Company Name: Disposal Control Service, Inc.

6. US EPA ID Number: CAT030034184

C. State Transporter's ID: 113005

D. Transporter's Phone: (800) 824-3345

7. Transporter 2 Company Name

8. US EPA ID Number

E. State Transporter's ID

F. Transporter's Phone

9. Designated Facility Name and Site Address
Demenno Kerdoon
2100 N. Alameda
Compton, CA 90222

10. US EPA ID Number: CAT080013352

G. State Facility's ID: CAT080012252

H. Facility's Phone: (213) 537-7100

11. US DOT Description (Including Proper Shipping Name, Hazard Class, and ID Number)	12. Containers No.	Type	13. Total Quantity	14. Unit Wt/Vol	I. Waste No.
a. Hazardous Waste Liquid n.o.s., ORM-E (Waste Coolant) NA 9189	001	TT	2000	G	State / EPA/Other N/A
b.					State / EPA/Other
c.					State / EPA/Other
d.					State / EPA/Other

RECEIVED
NOV 21 1990
HEALTH, SAFETY AND ENVIRONMENTAL

J. Additional Descriptions for Materials Listed Above
Water Soluble Oil
Lubricating Oil
Water

K. Handling Codes for Wastes Listed Above
a. R-01
b.
c.
d.

15. Special Handling Instructions and Additional Information

USE PROPER PERSONAL PROTECTIVE EQUIPMENT

16.

GENERATOR'S CERTIFICATION: I hereby declare that the contents of this consignment are fully and accurately described above by proper shipping name and are classified, packed, marked, and labeled, and are in all respects in proper condition for transport by highway according to applicable international and national government regulations.

If I am a large quantity generator, I certify that I have a program in place to reduce the volume and toxicity of waste generated to the degree I have determined to be economically practicable and that I have selected the practicable method of treatment, storage, or disposal currently available to me which minimizes the present and future threat to human health and the environment; OR, if I am a small quantity generator, I have made a good faith effort to minimize my waste generation and select the best waste management method that is available to me and that I can afford.

Printed/Typed Name: NANCY A. GIRTEN | Signature: Nancy A Girten | Month Day Year: 11 13 90

17. Transporter 1 Acknowledgement of Receipt of Materials

Printed/Typed Name: Loyd Driggers | Signature: [signature] | Month Day Year: 11 13 90

18. Transporter 2 Acknowledgement of Receipt of Materials

Printed/Typed Name | Signature | Month Day Year

19. Discrepancy Indication Space

20. Facility Owner or Operator Certification of receipt of hazardous materials covered by this manifest except as noted in Item 19.

Printed/Typed Name: Curt Spraggins | Signature: Curt Spraggins | Month Day Year: 11 13 90

GENERATOR — TRANSPORTER — FACILITY

IN CASE OF AN EMERGENCY OR SPILL, CALL THE NATIONAL RESPONSE CENTER 1-800-424-8802; WITHIN CALIFORNIA CALL 1-800-852-7550

88457056

DHS 8022 A (1/88)
EPA 8700—22
(Rev. 9-88) Previous editions are obsolete.

Do Not Write Below This Line

Yellow: TSDF SENDS THIS COPY TO GENERATOR WITHIN 30 DAYS

01200033

Department of Health Services
Toxic Substances Control Division
Sacramento, California

"3260

California—Health and Welfare Agency
Form Approved OMB No. 2050-0039 (Expires 9-30-91)
Please print or type. (Form designed for use on elite (12 pitch) typewriter).

UNIFORM HAZARDOUS WASTE MANIFEST

1. Generator's US EPA ID No. CAD982373161 | Manifest Document No.

2. Page 1 of 1

Information in the shaded areas is not required by Federal law.

A. State Manifest Document Number: 89957751

B. State Generator's ID: 4A4026061

3. Generator's Name and Mailing Address: [illegible] CO - ELECTRONICS DIV [illegible] 90605

4. Generator's Phone (213) 785-1010

C. State Transporter's ID: 11343

5. Transporter 1 Company Name: DISPOSAL CONTROL SERVICE

6. US EPA ID Number: CAT080013352

D. Transporter's Phone: 714-785-0842

7. Transporter 2 Company Name

8. US EPA ID Number

E. State Transporter's ID

F. Transporter's Phone

9. Designated Facility Name and Site Address: DERMANG RECOVERY 2100 N ALAMEDA COMPTON, CA 90222

10. US EPA ID Number: CAT080013352

G. State Facility's ID: CAT080013352

H. Facility's Phone: 213-537-7160

11. US DOT Description (Including Proper Shipping Name, Hazard Class, and ID Number)	12. Containers No.	Type	13. Total Quantity	14. Unit Wt/Vol	I. Waste No.
a. CLEANER WASTE NON RCRA HAZARDOUS WASTE LIQUID	01	TT	00055	G	State 221 / EPA/Other 01
b.					State / EPA/Other
c.					State / EPA/Other
d.					State / EPA/Other

J. Additional Descriptions for Materials Listed Above: 112 OIL & WATER FROM CLEANER

K. Handling Codes for Wastes Listed Above: a. P61 b. c. d.

15. Special Handling Instructions and Additional Information: WEAR APPROPRIATE PERSONAL PROTECTIVE EQUIPMENT

16. **GENERATOR'S CERTIFICATION:** I hereby declare that the contents of this consignment are fully and accurately described above by proper shipping name and are classified, packed, marked, and labeled, and are in all respects in proper condition for transport by highway according to applicable international and national government regulations.

If I am a large quantity generator, I certify that I have a program in place to reduce the volume and toxicity of waste generated to the degree I have determined to be economically practicable and that I have selected the practicable method of treatment, storage, or disposal currently available to me which minimizes the present and future threat to human health and the environment; OR, if I am a small quantity generator, I have made a good faith effort to minimize my waste generation and select the best waste management method that is available to me and that I can afford.

Printed/Typed Name: NANCY [illegible] | Signature | Month Day Year: 1 10 90

17. Transporter 1 Acknowledgement of Receipt of Materials

Printed/Typed Name: LAWRENCE D KELLING | Signature | Month Day Year: 1 10 90

18. Transporter 2 Acknowledgement of Receipt of Materials

Printed/Typed Name | Signature | Month Day Year

19. Discrepancy Indication Space

20. Facility Owner or Operator Certification of receipt of hazardous materials covered by this manifest except as noted in Item 19.

Printed/Typed Name: CHRT SPRAGGINS | Signature | Month Day Year: 1 10 90

GENERATOR — TRANSPORTER — FACILITY

IN CASE OF AN EMERGENCY OR SPILL, CALL THE NATIONAL RESPONSE CENTER 1-800-424-8802; WITHIN CALIFORNIA CALL 1-800-852-7550

89957751

DHS 8022 A (1/88)
EPA 8700—22
(Rev. 9-88) Previous editions are obsolete.

Do Not Write Below This Line

Yellow: TSDF SENDS THIS COPY TO GENERATOR WITHIN 30 DAYS

California—Health and Welfare Agency
Approved OMB No. 2050—0039 (Expires 9-30-91)
Please print or type. (Form designed for use on elite or pitch typewriter).

Department of Health Services
Toxic Substances Control Division
Sacramento, California

UNIFORM HAZARDOUS WASTE MANIFEST

1. Generator's US EPA ID No.: CAD008325334 | Manifest Document No.: 90032 | 2. Page 1 of 2 | Information in the shaded areas is not required by Federal law.

3. Generator's Name and Mailing Address
Allied-Signal Electrodynamics Division
11600 Sherman Way, N. Hollywood, CA 91605

4. Generator's Phone (818) 503-3214

A. State Manifest Document Number: 88457055
B. State Generator's ID: HAHQ36032067

5. Transporter 1 Company Name: Oil and Solvent Process Co.
6. US EPA ID Number: CAD008302903
C. State Transporter's ID: 111551
D. Transporter's Phone: (818) 334-5117

7. Transporter 2 Company Name:
8. US EPA ID Number:
E. State Transporter's ID:
F. Transporter's Phone:

9. Designated Facility Name and Site Address
Oil and Solvent Process Co.
1704 W. First St.
Azusa, CA 91702

10. US EPA ID Number: CAD008302903
G. State Facility's ID: CAD008302903
H. Facility's Phone: (818)334-5117

11. US DOT Description (Including Proper Shipping Name, Hazard Class, and ID Number)	12. Containers No.	Type	13. Total Quantity	14. Unit Wt/Vol	I. Waste No.
a. R.Q. Waste Heptane, Flammable Liquid UN1206	001	DM	00055	G	State 213 / EPA/Other D001
b. Waste Hydraulic Fluid RCRA Non-Regulated Hazardous Waste LIQUID (Skydrol 500B-4)	001	DM	00055	G	State 221 / EPA/Other N/A
c. R.Q. Hazardous Waste Flammable Liquid, n.o.s UN1993 (red oil and heptane)	001	DM	00055	G	State 214 / EPA/Other D001
d. R.Q. Waste 1,1,1 Trichloroethane ORM-A UN2831	004	DM	00220	G	State 211 / EPA/Other F001

J. Additional Descriptions for Materials Listed Above
11 A) Profile #LAX F28557
11 B) Profile #LAX F28554
11 C) Profile #LAX F28556
11 D) Profile #LAX G93094

K. Handling Codes for Wastes Listed Above
a. 01 b. 01
c. 01 d. 01

15. Special Handling Instructions and Additional Information
USE PROPER PERSONAL PROTECTIVE EQUIPMENT

16.
GENERATOR'S CERTIFICATION: I hereby declare that the contents of this consignment are fully and accurately described above by proper shipping name and are classified, packed, marked, and labeled, and are in all respects in proper condition for transport by highway according to applicable international and national government regulations.

If I am a large quantity generator, I certify that I have a program in place to reduce the volume and toxicity of waste generated to the degree I have determined to be economically practicable and that I have selected the practicable method of treatment, storage, or disposal currently available to me which minimizes the present and future threat to human health and the environment; OR, if I am a small quantity generator, I have made a good faith effort to minimize my waste generation and select the best waste management method that is available to me and that I can afford.

Printed/Typed Name: Nancy A. Girten | Signature: Nancy A Girten | Month Day Year: 11 05 90

17. Transporter 1 Acknowledgement of Receipt of Materials
Printed/Typed Name: ED. Guerrero | Signature: ED Guerrero | Month Day Year: 11 05 90

18. Transporter 2 Acknowledgement of Receipt of Materials
Printed/Typed Name: | Signature: | Month Day Year:

19. Discrepancy Indication Space

20. Facility Owner or Operator Certification of receipt of hazardous materials covered by this manifest except as noted in Item 19.
Printed/Typed Name: MIKE HEDDEN | Signature: Mike Hedden | Month Day Year: 11 05 90

GENERATOR — TRANSPORTER — FACILITY

IN CASE OF AN EMERGENCY OR SPILL, CALL THE NATIONAL RESPONSE CENTER 1-800-424-8802; WITHIN CALIFORNIA CALL 1-800-852-75

88457055

3143-11-12-13-14-15-16

DHS 8022 A (1/88)
EPA 8700—22
(Rev. 9-88) Previous editions are obsolete.

Do Not Write Below This Line

Yellow: TSDF SENDS THIS COPY TO GENERATOR WITHIN 30 DAYS

or use on elite (12-pitch) typewriter.)

Form Approved. OMB No. 2000-0404. Expires 7-31-86

...DOUS WASTE MANIFEST (Continuation Sheet)

21. Generator's US EPA ID No. CAD008325334

Manifest Document No. 90032

22. Page 2

Information in the shaded areas is not required by Federal law.

Generator's Name
Allied-Signal Aerospace Electrodynamics Division
11600 Sherman Way, N. Hollywood CA 91605

L. State Manifest Document Number 88457055

M. State Generator's ID HAH036032067

24. Transporter 1 Company Name: Oil and Solvent Process Co.

25. US EPA ID Number: CAD008302903

N. State Transporter's ID 111551

O. Transporter's Phone (818)334-5117

26. Transporter ____ Company Name

27. US EPA ID Number

P. State Transporter's ID

Q. Transporter's Phone

28. US DOT Description (Including Proper Shipping Name, Hazard Class, and ID Number)	29. Containers No.	Type	30. Total Quantity	31. Unit Wt/Vol	R. Waste No.
a. R.Q. Hazardous Waste Flammable Liquid, n.o.s.UN1993 (paint and thinner)	002	DM	00110	G	214 F003
b. R.Q. Hazardous Waste Flammable Liquid, n.o.s.UN1993 (thinner and alcohol)	001	DM	00055	G	214 F003
c.					
d.					
e.					
f.					
g.					
h.					
i.					

GENERATOR

S. Additional Descriptions for Materials Listed Above
28 A) Profile #LAX F27942
28 B) Profile #LAX F27942

T. Handling Codes for Wastes Listed Above
01

32. Special Handling Instructions and Additional Information
USE PROPER PERSONAL PROTECTIVE EQUIPMENT

TRANSPORTER

33. Transporter ____ Acknowledgement of Receipt of Materials

Printed/Typed Name: E. Guerrero

Signature: E. Guerrero

Date: Month 11 Day 05 Year 90

34. Transporter ____ Acknowledgement of Receipt of Materials

Printed/Typed Name

Signature

Date: Month Day Year

FACILITY

35. Discrepancy Indication Space

EPA Form 8700-22A (1-84)

Form Approved OMB No. 2050—0039 (Expires 9-30-91)
Please print or type. (Form designed for use on elite (12-pitch typewriter).

Toxic Substances Control Division
Sacramento, California

UNIFORM HAZARDOUS WASTE MANIFEST

1. Generator's US EPA ID No. C A D 0 0 8 3 2 5 3 3 4 | Manifest Document No. 9 0 0 3 1

2. Page 1 of 1

Information in the shaded areas is not required by Federal law.

3. Generator's Name and Mailing Address
Allied-Signal, Electrodynamics Division
11600 Sherman Way, N. Hollywood, CA 91605

4. Generator's Phone 818) 503-3214

A. State Manifest Document Number 88457052

B. State Generator's ID H A H Q 3 6 0 3 2 0 6 7

5. Transporter 1 Company Name: Disposal Control Service, Inc.

6. US EPA ID Number: C A T 0 3 0 0 3 4 1 8 4

C. State Transporter's ID 113043

D. Transporter's Phone (800) 824-3345

7. Transporter 2 Company Name

8. US EPA ID Number

E. State Transporter's ID

F. Transporter's Phone

9. Designated Facility Name and Site Address
Demenno Kerdoon
2100 N. Alameda Street
Compton, CA 90222

10. US EPA ID Number: C A T 0 8 0 0 1 3 3 5 2

G. State Facility's ID

H. Facility's Phone (213) 537-7100

11. US DOT Description (Including Proper Shipping Name, Hazard Class, and ID Number)	12. Containers No.	Type	13. Total Quantity	14. Unit Wt/Vol	I. Waste No.
a. Waste Petroleum Oil, n.o.s. Combustible Liquid UN 1270 DOT-E 7476	0 0 1	T T	0 1 1 5 0	G	State 221 EPA/Other N/A
b.					State EPA/Other
c.					State EPA/Other
d.					State EPA/Other

J. Additional Descriptions for Materials Listed Above
Water Soluble Oil 2%
Lubricating Oil 20%
Hydraulic Oil 60%
Water 20%

K. Handling Codes for Wastes Listed Above
a. b. c. d.

15. Special Handling Instructions and Additional Information
USE PROPER PERSONAL PROTECTIVE EQUIPMENT

16. GENERATOR'S CERTIFICATION: I hereby declare that the contents of this consignment are fully and accurately described above by proper shipping name and are classified, packed, marked, and labeled, and are in all respects in proper condition for transport by highway according to applicable international and national government regulations.

If I am a large quantity generator, I certify that I have a program in place to reduce the volume and toxicity of waste generated to the degree I have determined to be economically practicable and that I have selected the practicable method of treatment, storage, or disposal currently available to me which minimizes the present and future threat to human health and the environment; OR, if I am a small quantity generator, I have made a good faith effort to minimize my waste generation and select the best waste management method that is available to me and that I can afford.

Printed/Typed Name: NANCY A. GIRTEN | Signature: Nancy A Girten | Month Day Year: 1 0 2 5 9 0

17. Transporter 1 Acknowledgement of Receipt of Materials
Printed/Typed Name: Ronald L Duncanson | Signature | Month Day Year: 1 0 2 5 9 0

18. Transporter 2 Acknowledgement of Receipt of Materials
Printed/Typed Name | Signature | Month Day Year

19. Discrepancy Indication Space

20. Facility Owner or Operator Certification of receipt of hazardous materials covered by this manifest except as noted in Item 19.
Printed/Typed Name: CURT SPRAGGINS | Signature | Month Day Year: 1 0 2 5 9 0

GENERATOR — TRANSPORTER — FACILITY

IN CASE OF AN EMERGENCY OR SPILL, CALL THE NATIONAL RESPONSE CENTER 1-800-424-8802; WITHIN CALIFORNIA CALL 1-800-852-7550

88457052

DHS 8022 A (1/88)
EPA 8700—22
(Rev. 9-88) Previous editions are obsolete.

Do Not Write Below This Line

Yellow: TSDF SENDS THIS COPY TO GENERATOR WITHIN 30 DAYS

2/10/89

State of California—Health and Welfare Agency
Form Approved OMB No. 2050—0039 (Expires 9-30-[illegible])
Please print or type. (Form designed for use on elite (pitch typewriter).

Department of Health Services
Toxic Substances Control Division
Sacramento, California

UNIFORM HAZARDOUS WASTE MANIFEST

1. Generator's US EPA ID No.: CAD008325334 — Manifest Document No.: 90030

2. Page 1 of 1

Information in the shaded areas is not required by Federal law.

3. Generator's Name and Mailing Address
Allied-Signal Electrodynamics Division
11600 Sherman Way, North Hollywood, CA 91605

4. Generator's Phone (818) 503-3214

A. State Manifest Document Number: 88457050

B. State Generator's ID: HAHD36032067

5. Transporter 1 Company Name: Disposal Control Service, Inc.

6. US EPA ID Number: CAT080034184

C. State Transporter's ID: 113033

D. Transporter's Phone: (800) 824-3345

7. Transporter 2 Company Name:

8. US EPA ID Number:

E. State Transporter's ID:

F. Transporter's Phone:

9. Designated Facility Name and Site Address
Norris Environmental
5215 S. Boyle Avenue
Vernon, CA 90058

10. US EPA ID Number: CAD097030993

G. State Facility's ID: CAD097030993

H. Facility's Phone: (213) 588-7111

11. US DOT Description (Including Proper Shipping Name, Hazard Class, and ID Number)	12. Containers No.	Type	13. Total Quantity	14. Unit Wt/Vol	I. Waste No.
a. R.Q. Hazardous Waste Liquid, n.o.s., ORM-E (Waste Nickel Sulfamate) NA 9189 DOT 34-15	003	DF	00045	G	State 726 EPA/Other F006
b. RQ Waste Chromic Acid Solution, Corrosive UN 1755 Material DOT 34-55	005	DF	00275	G	State 792 EPA/Other D002 D007
c.					State EPA/Other
d.					State EPA/Other

RECEIVED
NOV 13 1990
HEALTH, SAFETY AND ENVIRONMENTAL

J. Additional Descriptions for Materials Listed Above
11 A) Nickel Sulfamate - Approval # E1205AC3
11 B) Chromic Acid - Approval # E1205CR6

K. Handling Codes for Wastes Listed Above
a. 15 b. 15
c. d.

15. Special Handling Instructions and Additional Information
USE PROPER PERSONAL PROTECTIVE EQUIPMENT

(3X 15 gal Poly
5X 55 gal poly)

16.
GENERATOR'S CERTIFICATION: I hereby declare that the contents of this consignment are fully and accurately described above by proper shipping name and are classified, packed, marked, and labeled, and are in all respects in proper condition for transport by highway according to applicable international and national government regulations.

If I am a large quantity generator, I certify that I have a program in place to reduce the volume and toxicity of waste generated to the degree I have determined to be economically practicable and that I have selected the practicable method of treatment, storage, or disposal currently available to me which minimizes the present and future threat to human health and the environment; OR, if I am a small quantity generator, I have made a good faith effort to minimize my waste generation and select the best waste management method that is available to me and that I can afford.

Printed/Typed Name: NANCY A. GIRTEN — Signature: Nancy A Girten — Month Day Year: 10 24 90

17. Transporter 1 Acknowledgement of Receipt of Materials
Printed/Typed Name: Michael B. Van Alstine — Signature: Michael B Van Alstine — Month Day Year: 10 24 90

18. Transporter 2 Acknowledgement of Receipt of Materials
Printed/Typed Name: — Signature: — Month Day Year:

19. Discrepancy Indication Space

20. Facility Owner or Operator Certification of receipt of hazardous materials covered by this manifest except as noted in Item 19.
Printed/Typed Name: BI TIN VELASCO — Signature: Bi Tin Velasco — Month Day Year: 10 31 90

GENERATOR — TRANSPORTER — FACILITY

IN CASE OF AN EMERGENCY OR SPILL, CALL THE NATIONAL RESPONSE CENTER 1-800-424-8802; WITHIN CALIFORNIA CALL 1-800-852-7550

88457050

DHS 8022 A (1/88)
EPA 8700—22
(Rev. 9-88) Previous editions are obsolete.

Do Not Write Below This Line

Yellow: TSDF SENDS THIS COPY TO GENERATOR WITHIN 30 DAYS

State of California—Health and Welfare Agency
Form Approved OMB No. 2050—0039 (Expires 9-30-9[illegible])
Please print or type. (Form designed for use on elite [illegible] pitch typewriter).

Department of Health Services
Toxic Substances Control Division
Sacramento, California

UNIFORM HAZARDOUS WASTE MANIFEST

1. Generator's US EPA ID No. CAD0[illegible] Manifest Document No. 9[illegible]

2. Page 1 of 1

Information in the shaded areas is not required by Federal law.

3. Generator's Name and Mailing Address
Allied-Signal, Electronics Division
11600 Sherman Way
N. Hollywood, CA 91605

4. Generator's Phone (818) [illegible]

A. State Manifest Document Number **88457048**

B. State Generator's ID CAD[illegible]

5. Transporter 1 Company Name: DISPOSAL CONTROL SERVICES

6. US EPA ID Number: CAT[illegible]

C. State Transporter's ID 1B33

D. Transporter's Phone (818) [illegible]

7. Transporter 2 Company Name

8. US EPA ID Number

E. State Transporter's ID

F. Transporter's Phone

9. Designated Facility Name and Site Address
U.S. Ecology
[illegible] Boundary
Beatty, NV 89003

10. US EPA ID Number: NVT[illegible]

G. State Facility's ID

H. Facility's Phone (702) 553-2203

11. US DOT Description (Including Proper Shipping Name, Hazard Class, and ID Number)	12. Containers No.	Type	13. Total Quantity	14. Unit Wt/Vol	I. Waste No.
a. RQ WASTE CORROSIVE SOLID, N.O.S. (CORROSIVE MATERIAL) UN 1759 (WASTE SODIUM HYDROXIDE) NA 9000	001	DF	00[illegible]	P	State 141 / EPA/Other D2
b.					State / EPA/Other
c.					State / EPA/Other
d.					State / EPA/Other

RECEIVED
NOV 1 [illegible] 1990
R & O DEPT.

J. Additional Descriptions for Materials Listed Above
11A) Sodium Hydroxide - Approval #07-005-1941

K. Handling Codes for Wastes Listed Above
a. b. c. d.

15. Special Handling Instructions and Additional Information
WEAR Appropriate Safety Protection 1X85gal poly

16.
GENERATOR'S CERTIFICATION: I hereby declare that the contents of this consignment are fully and accurately described above by proper shipping name and are classified, packed, marked, and labeled, and are in all respects in proper condition for transport by highway according to applicable international and national government regulations.

If I am a large quantity generator, I certify that I have a program in place to reduce the volume and toxicity of waste generated to the degree I have determined to be economically practicable and that I have selected the practicable method of treatment, storage, or disposal currently available to me which minimizes the present and future threat to human health and the environment; **OR**, if I am a small quantity generator, I have made a good faith effort to minimize my waste generation and select the best waste management method that is available to me and that I can afford.

Printed/Typed Name: Mark A Cantell — Signature: [signature] — Month Day Year: 11/01/90

17. Transporter 1 Acknowledgement of Receipt of Materials
Printed/Typed Name: Michael B. Van Alstine — Signature: [signature] — Month Day Year: 11/01/90

18. Transporter 2 Acknowledgement of Receipt of Materials
Printed/Typed Name — Signature — Month Day Year

19. Discrepancy Indication Space ~~Drum Rejected by TSDF. 10-19-90~~ D2
material non-RCRA per Generator 10/19/90 D2
11A) Actual wt. 146#

20. Facility Owner or Operator Certification of receipt of hazardous materials covered by this manifest except as noted in Item 19.
Printed/Typed Name: David Lane — Signature: [signature] — Month Day Year: 11/01/90

GENERATOR — TRANSPORTER — FACILITY

88457048

IN CASE OF AN EMERGENCY OR SPILL, CALL THE NATIONAL RESPONSE CENTER 1-800-424-8802; WITHIN CALIFORNIA CALL 1-800-852-7550

DHS 8022 A (1/88)
EPA 8700—22
(Rev. 9-88) Previous editions are obsolete.

Do Not Write Below This Line

Yellow: TSDF SENDS THIS COPY TO GENERATOR WITHIN 30 DAYS

of California—Health and Welfare Agency
pproved OMB No. 2050—0039 (Expires 9-30-91)
print or type. (Form designed for use on elite (1) pitch typewriter).

Department of ...
Toxic Substances Control Division
Sacramento, California

88457046

UNIFORM HAZARDOUS WASTE MANIFEST

1. Generator's US EPA ID No.: CAD007325334 | Manifest Document No.: 900218

2. Page 1 of 1

Information in the shaded areas is not required by Federal law.

3. Generator's Name and Mailing Address
Allied Signal, Electrodynamics Division
1100 Sherman Way
N. Hollywood, CA 91605

4. Generator's Phone (818) 503-3214

A. State Manifest Document Number: 88457046

B. State Generator's ID: HAMQ360320067

5. Transporter 1 Company Name: DISPOSAL CONTROL SERVICES, INC.

6. US EPA ID Number: CAT080034184

C. State Transporter's ID: 113033

D. Transporter's Phone: (800) 834-3345

7. Transporter 2 Company Name:

8. US EPA ID Number:

E. State Transporter's ID:

F. Transporter's Phone:

9. Designated Facility Name and Site Address
NORRIS ENVIRONMENTAL
5215 S. BOYLE AVENUE
VERNON, CA 90058

10. US EPA ID Number: CAD097030993

G. State Facility's ID: CAD097030993

H. Facility's Phone: (213) 588-7111

11. US DOT Description (Including Proper Shipping Name, Hazard Class, and ID Number)	12. Containers No.	Type	13. Total Quantity	14. Unit Wt/Vol	I. Waste No.
a. R.Q. HAZARDOUS WASTE LIQUID, N.O.S. DRM-E (WASTE NICKEL SULFAMATE) NA 9189 DOT E-7768	0012	DF	00110	G	State 726 EPA/Other F006
b. R.Q. HAZARDOUS WASTE LIQUID, N.O.S. DRM-E (WASTE NICKEL SULFAMATE) NA 9189 DOT E-34-55	0011	DF	00015	G	State 726 EPA/Other F006
c. R.Q. HAZARDOUS WASTE LIQUID, N.O.S. DRM-E, NA 9189 (WASTE SODIUM BICHROMATE/NITRIC ACID) DOT E-34-55	0013	DF	00165	G	State 723 EPA/Other D007/~~D002~~
d. R.Q. HAZARDOUS WASTE LIQUID, N.O.S. DRM-E (WASTE TIN FLUOBORATE) NA 9189 DOT E-7768	0011	DF	00055	G	State 722 EPA/Other D006 ~~D002~~

J. Additional Descriptions for Materials Listed Above
11A) Nickel Sulfamate - Approval # E1205AC3
11B) Nickel Sulfamate - Approval # E1205AC3
11C) Sodium Bichromate - Approval # E1205CR2
11D) Tin Fluoborate - Approval # E1205AC4

K. Handling Codes for Wastes Listed Above
a. 15 b. 15
c. 15 d. 15

15. Special Handling Instructions and Additional Information
USE PROPER PERSONAL PROTECTIVE EQUIPMENT (7 X 55 gal Poly)

16.

GENERATOR'S CERTIFICATION: I hereby declare that the contents of this consignment are fully and accurately described above by proper shipping name and are classified, packed, marked, and labeled, and are in all respects in proper condition for transport by highway according to applicable international and national government regulations.

If I am a large quantity generator, I certify that I have a program in place to reduce the volume and toxicity of waste generated to the degree I have determined to be economically practicable and that I have selected the practicable method of treatment, storage, or disposal currently available to me which minimizes the present and future threat to human health and the environment; OR, if I am a small quantity generator, I have made a good faith effort to minimize my waste generation and select the best waste management method that is available to me and that I can afford.

Printed/Typed Name: NANCY A. GIRTEN | Signature: Nancy A. Girten | Month Day Year: 10 18 90

17. Transporter 1 Acknowledgement of Receipt of Materials
Printed/Typed Name: Michael B. Van Alstine | Signature: Michael B. Van Alstine | Month Day Year: 10 18 90

18. Transporter 2 Acknowledgement of Receipt of Materials
Printed/Typed Name: | Signature: | Month Day Year:

19. Discrepancy Indication Space

20. Facility Owner or Operator Certification of receipt of hazardous materials covered by this manifest except as noted in Item 19.
Printed/Typed Name: BI TIN VELASCO | Signature: Bi Tin Velasco | Month Day Year: 10 18 90

GENERATOR — TRANSPORTER — FACILITY

IN CASE OF AN EMERGENCY OR SPILL, CALL THE NATIONAL RESPONSE CENTER 1-800-424-8802; WITHIN CALIFORNIA CALL 1-800-852-7550

DHS 8022 A (1/88)
EPA 8700—22
(Rev. 9-88) Previous editions are obsolete.

Do Not Write Below This Line

Yellow: TSDF SENDS THIS COPY TO GENERATOR WITHIN 30 DAY

State of California—Health and Welfare Agency
Form Approved OMB No. 2050—0039 (Expires 9-30-9
Please print or type. (Form designed for use on elite or pitch typewriter).

#1562

Department of Health Serv
Toxic Substances Control Divis
Sacramento, California

UNIFORM HAZARDOUS WASTE MANIFEST

1. Generator's US EPA ID No. CAD008325334 | Manifest Document No. 90027 | 2. Page 1 of

Information in the shaded areas is not required by Federal law.

3. Generator's Name and Mailing Address
Allied-Signal Aerospace CO.- Electrodynamics Division
11600 Sherman Way, North Hollywood, CA 91605
4. Generator's Phone (818 765-1010

A. State Manifest Document Number: 88457045
B. State Generator's ID: HAHQ360320 67

5. Transporter 1 Company Name: Disposal Control
6. US EPA ID Number: CAT030034184
C. State Transporter's ID: 113144
D. Transporter's Phone: (800) 824-3345

7. Transporter 2 Company Name
8. US EPA ID Number
E. State Transporter's ID
F. Transporter's Phone

9. Designated Facility Name and Site Address
Demenno Kerdoon
2100 N. Alameda
Compton, CA 90222
10. US EPA ID Number: CAT080013352
G. State Facility's ID: CAT080013352
H. Facility's Phone: (213) 537-7100

11. US DOT Description (Including Proper Shipping Name, Hazard Class, and ID Number)	12. Containers No.	Type	13. Total Quantity	14. Unit Wt/Vol	I. Waste No.
a. Hazardous Waste Liquid n.o.s., ORM-E, NA9189 (WASTE COOLANT)	001	tt	02000	G	State 221 / EPA/Other N/A
b.					State / EPA/Other
c.					State / EPA/Other
d.					State / EPA/Other

J. Additional Descriptions for Materials Listed Above
Water Soluble Oils
Lubricating Oils
Water

K. Handling Codes for Wastes Listed Above
a. ak-01
b.
c.
d.

15. Special Handling Instructions and Additional Information
Use appropriate personal protective equipment.

16.
GENERATOR'S CERTIFICATION: I hereby declare that the contents of this consignment are fully and accurately described above by proper shipping name and are classified, packed, marked, and labeled, and are in all respects in proper condition for transport by highway according to applicable international and national government regulations.

If I am a large quantity generator, I certify that I have a program in place to reduce the volume and toxicity of waste generated to the degree I have determined to be economically practicable and that I have selected the practicable method of treatment, storage, or disposal currently available to me which minimizes the present and future threat to human health and the environment; OR, if I am a small quantity generator, I have made a good faith effort to minimize my waste generation and select the best waste management method that is available to me and that I can afford.

Printed/Typed Name: Danilo Gutierrez | Signature | Month Day Year: 09 17 90

17. Transporter 1 Acknowledgement of Receipt of Materials
Printed/Typed Name: PHILLIP FARLEY | Signature: Phillip Farley | Month Day Year: 09 17 90

18. Transporter 2 Acknowledgement of Receipt of Materials
Printed/Typed Name | Signature | Month Day Year

19. Discrepancy Indication Space

20. Facility Owner or Operator Certification of receipt of hazardous materials covered by this manifest except as noted in Item 19.
Printed/Typed Name: JN PARAH | Signature | Month Day Year: 09 17 90

Do Not Write Below This Line

GENERATOR — TRANSPORTER — FACILITY

88457045

IN CASE OF AN EMERGENCY OR SPILL, CALL THE NATIONAL RESPONSE CENTER 1-800-424-8802; WITHIN CALIFORNIA CALL 1-800-852-7550

DHS 8022 A (1/88)
EPA 8700—22
(Rev. 9-88) Previous editions are obsolete.

Yellow: TSDF SENDS THIS COPY TO GENERATOR WITHIN 30 DAYS

CW 09326

STATE OF ARKANSAS
Department of Pollution Control and Ecology
P. O. Box 9583 Little Rock, Arkansas 72219
Telephone 501-562-7444

1

Please print or type. (Form designed for use on elite (12-pitch) typewriter.)

Form Approved. OMB No. 2050-0039. Expires 9-30-91

AR 2-90

UNIFORM HAZARDOUS WASTE MANIFEST

1. Generator's US EPA ID No.: CAD008305334 — Manifest Document No.: 90216

2. Page 1 of 3

Information in the shaded areas is not required by Federal law.

3. Generator's Name and Mailing Address: Allied-Signal Aerospace - Electrodynamics Division, 11600 Sherman Way

4. Generator's Phone (818) 503-3626 N. Hollywood Ca 91605

A. State Manifest Document Number: AR- 449516

B. State Generator's ID:

5. Transporter 1 Company Name: Disposal Control Service Inc

6. US EPA ID Number: CAT080034184

C. State Transporter's ID: 113087 PC ___ H ___

D. Transporter's Phone: 1-800-877-3773

7. Transporter 2 Company Name:

8. US EPA ID Number:

E. State Transporter's ID: PC ___ H ___

F. Transporter's Phone:

9. Designated Facility Name and Site Address: Ensco Inc, American Rd, El Dorado AK 71730

10. US EPA ID Number: ARD069748192

G. State Facility's ID:

H. Facility's Phone: (501) 223-4100

11. US DOT Description (Including Proper Shipping Name, Hazard Class, and ID Number)	12. Containers No.	Type	13. Total Quantity	14. Unit Wt/Vol	I. Waste No.
a. waste corrisive Liquid, NOS, corrisive Material UN 1760 - Lab Packed material	1	DF	5	g	D002
b. Hazardous waste liquid NOS. ORM E N/A 9189 Lab Packed material	1	DF	5	g	N/R ~~N/A~~
c.					
d.					

J. Additional Descriptions for Materials Listed Above
a. Lab Packed drum #7 see attached list 1 x 5 gal
b. Lab Packed drum #8 see attached list 1 x 5 gal

K. Handling Codes for Wastes Listed Above

EMERGENCY RESPONSE INFORMATION:

if no alternate TSDF, return to generator 11a-10# 11b-23#

15. Special Handling Instructions and Additional Information: Profile # 144968

Use appropiate Personal Protective Equipment Load 60920

16. **GENERATOR'S CERTIFICATION:** I hereby declare that the contents of this consignment are fully and accurately described above by proper shipping name and are classified, packed, marked, and labeled, and are in all respects in proper condition for transport by highway according to applicable international and national government regulations and Arkansas state regulations.
If I am a large quantity generator, I certify that I have a program in place to reduce the volume and toxicity of waste generated to the degree I have determined to be economically practicable and that I have selected the practicable method of treatment, storage, or disposal currently available to me which minimizes the present and future threat to human health and the environment; OR, if I am a small quantity generator, I have made a good faith effort to minimize my waste generation and select the best waste management method that is available to me and that I can afford.

Printed/Typed Name: Danilo Gutierrez — Signature: [signature] — Month Day Year: 09 05 90

17. Transporter 1 Acknowledgement of Receipt of Materials

Printed/Typed Name: Jimmy Lizardo — Signature: Jimmy Lizardo — Month Day Year: 09 05 90

18. Transporter 2 Acknowledgement of Receipt of Materials

Printed/Typed Name: James Lawrence — Signature: James Lawrence — Month Day Year: 09 11 90

19. Discrepancy Indication Space

20. Facility Owner or Operator: Certification of receipt of hazardous materials covered by this manifest except as noted in Item 19.

Printed/Typed Name: Katherine R. Smith — Signature: Katherine R. Smith — Month Day Year: 09 16 90

GENERATOR / TRANSPORTER / FACILITY

EPA Form 8700-22 (Rev. 9-88) Previous edition is obsolete.

NOTICE: THE ORIGINAL AND NOT LESS THAN TWO (2) COPIES MUST MOVE WITH THE HAZARDOUS WASTE SHIPMENT. ONCE DELIVERED, THE TREATMENT/STORAGE/DISPOSAL FACILITY MUST RETURN THIS ORIGINAL COPY TO THE GENERATOR.

STATE OF ARKANSAS
Department of Pollution Control and Ecology
P. O. Box 9583 Little Rock, Arkansas 72219
Telephone 501-562-7444

1

Please print or type. (Form designed for use on elite (12-pitch) typewriter.)

Form Approved. OMB No. 2050-0039. Expires 9-30-91

AR 2-90

UNIFORM HAZARDOUS WASTE MANIFEST

1. Generator's US EPA ID No. CAD008325334 Manifest Document No. 90215

2. Page 1 of 9

Information in the shaded areas is not required by Federal law.

3. Generator's Name and Mailing Address
Allied-Signal Aerospace - Electrodynamics Division
11600 Sherman Way, NO Hollywood CA 91605

4. Generator's Phone (818) 503-3626

A. State Manifest Document Number AR-449515

B. State Generator's ID CAD008325334

5. Transporter 1 Company Name: Disposal Control Service

6. US EPA ID Number: CAT080034184

C. State Transporter's ID PC 1130H 87

D. Transporter's Phone 800 877-3773

7. Transporter 2 Company Name

8. US EPA ID Number

E. State Transporter's ID PC ____ H ____

F. Transporter's Phone

9. Designated Facility Name and Site Address
Ensco Inc.
American Rd.
El Dorado, AK 71730

10. US EPA ID Number: ARD069748192

G. State Facility's ID

H. Facility's Phone 501-223-4100

GENERATOR

11. US DOT Description (Including Proper Shipping Name, Hazard Class, and ID Number)	12. Containers No.	Type	13. Total Quantity	14. Unit Wt/Vol	I. Waste No.
a. waste flammable liquid, N.O.S. flammable liquid UN 1993, Lab Packed material (D001)	3	DM	1150	G	D001 F005 F024 F003
b. waste compressed gas, N.O.S. flammable gas UN 1954 Lab Packed material (D001)	1	DM	5	G	D001 F002
c. Hazardous waste solid, N.O.S. Dm E NA 9189 Lab Packed material	2	DF	48	P	D008
d. Hazardous waste solid, N.O.S. Dm. E NA 9189 Lab Packed materials	2	DF	86	P	~~D008~~ NR

J. Additional Descriptions for Materials Listed Above
a-Lab Packed drums #1, 2, 4 see attached list 3x55 gal
b-Lab Packed drums #9 see attached list 1x5 gal
c-Lab Packed drums #3, 6 see attached list 1x5 and 1x30 gal
d-Lab Packed drums #5, 10 see attached list 1x5 and 1x30 gal

K. Handling Codes for Wastes Listed Above

EMERGENCY RESPONSE INFORMATION:

if no alternate TSDF, return to generator 11a-536# 11b-12#

15. Special Handling Instructions and Additional Information
Profile number - 144968 11c-171# 11d-134#
Use appropriate Personal Protective equipment Load 609220

16. **GENERATOR'S CERTIFICATION:** I hereby declare that the contents of this consignment are fully and accurately described above by proper shipping name and are classified, packed, marked, and labeled, and are in all respects in proper condition for transport by highway according to applicable international and national government regulations and Arkansas state regulations.
If I am a large quantity generator, I certify that I have a program in place to reduce the volume and toxicity of waste generated to the degree I have determined to be economically practicable and that I have selected the practicable method of treatment, storage, or disposal currently available to me which minimizes the present and future threat to human health and the environment; OR, if I am a small quantity generator, I have made a good faith effort to minimize my waste generation and select the best waste management method that is available to me and that I can afford.

Printed/Typed Name: Danilo Gutierrez | Signature: [signature] | Month Day Year: 10 9 05 90

TRANSPORTER

17. Transporter 1 Acknowledgement of Receipt of Materials
Printed/Typed Name: Jimmy Lizarde | Signature: [signature] | Month Day Year: 09 06 90

18. Transporter 2 Acknowledgement of Receipt of Materials
Printed/Typed Name: James Lawrence | Signature: [signature] | Month Day Year: 09 11 90

FACILITY

19. Discrepancy Indication Space

20. Facility Owner or Operator: Certification of receipt of hazardous materials covered by this manifest except as noted in Item 19.
Printed/Typed Name: Katherine R. Smith | Signature: [signature] | Month Day Year: 09 16 90

EPA Form 8700-22 (Rev. 9-88) Previous edition is obsolete.

NOTICE: THE ORIGINAL AND NOT LESS THAN TWO (2) COPIES MUST ACCOMPANY THE WASTE.

State of California—Health and Welfare Agency
Form Approved OMB No. 2050—0039 (Expires 9-30-91)
Please print or type. (Form designed for use on elite [illegible] itch typewriter).

Department of Health Services
Toxic Substances Control Division
Sacramento, California

88457044

IN CASE OF AN EMERGENCY OR SPILL, CALL THE NATIONAL RESPONSE CENTER 1-800-424-8802; WITHIN CALIFORNIA CALL 1-800-852-7550

UNIFORM HAZARDOUS WASTE MANIFEST

1. Generator's US EPA ID No.: CAD008325334 — Manifest Document No.: 90024
2. Page 1 of 1 — Information in the shaded areas is not required by Federal law.

3. Generator's Name and Mailing Address
ALLIED-SIGNAL AEROSPACE CO - ELECTRODYNAMICS DIVISION
11600 SHERMAN WAY, NORTH HOLLYWOOD, CA 91605

4. Generator's Phone (818) 765-1010

A. State Manifest Document Number: 88457044
B. State Generator's ID: HAHQ360320 67
C. State Transporter's ID: 113033
D. Transporter's Phone: 800-824-3345
E. State Transporter's ID:
F. Transporter's Phone:
G. State Facility's ID: HFHQ38-000457 CAD097030993
H. Facility's Phone: (213) 588-7111

5. Transporter 1 Company Name: DISPOSAL CONTROL SRV. INC.
6. US EPA ID Number: CAT080034184
7. Transporter 2 Company Name:
8. US EPA ID Number:
9. Designated Facility Name and Site Address:
NORRIS ENVIRONMENTAL
5215 S. BOYLE AVENUE
VERNON, CA 90058
10. US EPA ID Number: CAD097030993

11. US DOT Description (Including Proper Shipping Name, Hazard Class, and ID Number)	12. Containers No.	Type	13. Total Quantity	14. Unit Wt/Vol	I. Waste No.
a. Waste CYANIDE SOLUTION n.o.s. POISON B UN ~~1988~~ RQ., F007	017	DF	00850	G	State 711; EPA/Other F007
b.					State; EPA/Other
c.					State; EPA/Other
d.					State; EPA/Other

J. Additional Descriptions for Materials Listed Above
a- PROFILE - E1205CN1 - CYANIDE PLATING SOLUTION

K. Handling Codes for Wastes Listed Above
a. 15
b.
c.
d.

15. Special Handling Instructions and Additional Information
USE APPROPRIATE PERSONAL PROTECTIVE EQUIPMENT.
(17 x 55gal Poly)

16.
GENERATOR'S CERTIFICATION: I hereby declare that the contents of this consignment are fully and accurately described above by proper shipping name and are classified, packed, marked, and labeled, and are in all respects in proper condition for transport by highway according to applicable international and national government regulations.

If I am a large quantity generator, I certify that I have a program in place to reduce the volume and toxicity of waste generated to the degree I have determined to be economically practicable and that I have selected the practicable method of treatment, storage, or disposal currently available to me which minimizes the present and future threat to human health and the environment; OR, if I am a small quantity generator, I have made a good faith effort to minimize my waste generation and select the best waste management method that is available to me and that I can afford.

Printed/Typed Name: DANILO F. GUTIERREZ — Signature: [signature] — Month Day Year: 08 16 90

17. Transporter 1 Acknowledgement of Receipt of Materials
Printed/Typed Name: Michael B Van Alstine — Signature: [signature] — Month Day Year: 08 16 90

18. Transporter 2 Acknowledgement of Receipt of Materials
Printed/Typed Name: — Signature: — Month Day Year:

19. Discrepancy Indication Space

20. Facility Owner or Operator Certification of receipt of hazardous materials covered by this manifest except as noted in Item 19.
Printed/Typed Name: BI TW VELASCO — Signature: [signature] Tia Velasco — Month Day Year: 08 16 90

GENERATOR — TRANSPORTER — FACILITY

DHS 8022 A (1/88)
EPA 8700—22
(Rev. 9-88) Previous editions are obsolete.

Do Not Write Below This Line

Yellow: TSDF SENDS THIS COPY TO GENERATOR WITHIN 30 DAYS

State of California—Health and Welfare Agency
Form Approved OMB No. 2050—0039 (Expires 9-30-9[illegible])
Please print or type. *(Form designed for use on elite [illegible] pitch typewriter).*

Department of Health Services
Toxic Substances Control Division
Sacramento, California

88457042

IN CASE OF AN EMERGENCY OR SPILL, CALL THE NATIONAL RESPONSE CENTER 1-800-424-8802; WITHIN CALIFORNIA CALL 1-800-852-7550

UNIFORM HAZARDOUS WASTE MANIFEST

1. Generator's US EPA ID No. CAD008325349 — Manifest Document No. 00023

2. Page 1 of 1

Information in the shaded areas is not required by Federal law.

3. Generator's Name and Mailing Address
ALLIED-SIGNAL AEROSPACE COMPANY, ELECTRODYNAMICS DIV.
11600 SHERMAN WAY, NORTH HOLLYWOOD, CA 91605

4. Generator's Phone (818) 765-1010

A. State Manifest Document Number: 88457042

B. State Generator's ID: HAH036032067

5. Transporter 1 Company Name: DISPOSAL CONTROL

6. US EPA ID Number: CAT030034184

C. State Transporter's ID: 113040

D. Transporter's Phone: (800) 824-3345

7. Transporter 2 Company Name

8. US EPA ID Number

E. State Transporter's ID

F. Transporter's Phone

9. Designated Facility Name and Site Address
NORRIS ENVIRONMENTAL
5215 S. Boyle Avenue
Vernon, CA 90058

10. US EPA ID Number: CAD097030993

G. State Facility's ID: HFHQ38-000457 ~~CAD009700993~~

H. Facility's Phone: (213) 588-7111

11. US DOT Description (Including Proper Shipping Name, Hazard Class, and ID Number)	12. Containers No.	Type	13. Total Quantity	14. Unit Wt/Vol	I. Waste No.
a. R.Q. HAZARDOUS WASTE LIQUID, n.o.s. ORM-E NA 9189 (D006)(CYANIDE RINSEWATER)	1	TT	4175	G	State 131 / EPA/Other D006
b.					State / EPA/Other
c.					State / EPA/Other
d.					State / EPA/Other

J. Additional Descriptions for Materials Listed Above
a- Profile 61205CNO - Cyanide Rinse Water

K. Handling Codes for Wastes Listed Above
a. b. c. d.

15. Special Handling Instructions and Additional Information
USE APPROPRIATE PERSONAL PROTECTIVE EQUIPMENT

16.
GENERATOR'S CERTIFICATION: I hereby declare that the contents of this consignment are fully and accurately described above by proper shipping name and are classified, packed, marked, and labeled, and are in all respects in proper condition for transport by highway according to applicable international and national government regulations.

If I am a large quantity generator, I certify that I have a program in place to reduce the volume and toxicity of waste generated to the degree I have determined to be economically practicable and that I have selected the practicable method of treatment, storage, or disposal currently available to me which minimizes the present and future threat to human health and the environment; OR, if I am a small quantity generator, I have made a good faith effort to minimize my waste generation and select the best waste management method that is available to me and that I can afford.

GENERATOR — Printed/Typed Name: DANILO F. GUTIERREZ — Signature: [signature] — Month Day Year: 08 15 90

TRANSPORTER — 17. Transporter 1 Acknowledgement of Receipt of Materials
Printed/Typed Name: Jimmy Lizardo — Signature: [signature] — Month Day Year: 08 15 90

18. Transporter 2 Acknowledgement of Receipt of Materials
Printed/Typed Name — Signature — Month Day Year

FACILITY — 19. Discrepancy Indication Space

20. Facility Owner or Operator Certification of receipt of hazardous materials covered by this manifest except as noted in Item 19.
Printed/Typed Name: BI TIN VELASCO — Signature: Bi Tin Velasco — Month Day Year: 08 15 90

Do Not Write Below This Line

DHS 8022 A (1/88)
EPA 8700—22
(Rev. 9-88) Previous editions are obsolete.

Yellow: TSDF SENDS THIS COPY TO GENERATOR WITHIN 30 DAYS

STATE OF ARKANSAS
Department of Pollution Control and Ecology
P. O. Box 9583 Little Rock, Arkansas 72219
Telephone 501-562-7444

1

Please print or type. (Form designed for use on elite (12-pitch) typewriter.)

Form Approved. OMB No. 2050-0039. Expires 9-30-91

AR 2-90

UNIFORM HAZARDOUS WASTE MANIFEST

1. Generator's US EPA ID No.: CAD008325334 | Manifest Document No.: 9022

2. Page 1 of 12

Information in the shaded areas is not required by Federal law.

3. Generator's Name and Mailing Address: Allied-Signal Aerospace Co. Electrodynamics Div. 11600 Sherman Way, No. Hollywood, CA 91605

4. Generator's Phone (818) 503-3626

A. State Manifest Document Number: AR- 457122

B. State Generator's ID: CAD008325334

5. Transporter 1 Company Name: Disporsal Control Services

6. US EPA ID Number: CAT030034184

C. State Transporter's ID: 113039 PC ___ H ___

D. Transporter's Phone: 18008773773

7. Transporter 2 Company Name:

8. US EPA ID Number:

E. State Transporter's ID: PC ___ H ___

F. Transporter's Phone:

9. Designated Facility Name and Site Address: ENSCO Inc. American Rd. El Dorado, AK 71730

10. US EPA ID Number: ARD069748192

G. State Facility's ID:

H. Facility's Phone: 501-223-4100

11. US DOT Description (Including Proper Shipping Name, Hazard Class, and ID Number)	12. Containers No.	Type	13. Total Quantity	14. Unit Wt/Vol	I. Waste No.
a. waste flammable Liquid, n.o.s flammable Liquid Lab Packed material (D001) UN 1993	4	DM	200	g	U196, U052 D001 U002
b. waste flammable Liquid n.o.s. flammable Liquid Lab Packed material (D001) UN 1993	1	DF	5	g	D001 U080
c. Hazardous waste Liquid n.o.s. flammable Liquid Lab Packed material UN 9189	1	DF	5	g	P030 N/R
d.					

J. Additional Descriptions for Materials Listed Above
a- Lab packed drums 1,2,3,4 see attached list 4x55 Gal
b- Lab packed drum #5 see attached list 1x5 Gal
c- Lab packed drum #6 see attached list 1x5 Gal

if no alternate TSDF, return to generator 11a-766#

K. Handling Codes for Wastes Listed Above

EMERGENCY RESPONSE INFORMATION:

15. Special Handling Instructions and Additional Information
Profile #108795 11b- 15# 11c- 11#
use appropiate Personal Protective equipment LOAD # 60385

16. **GENERATOR'S CERTIFICATION:** I hereby declare that the contents of this consignment are fully and accurately described above by proper shipping name and are classified, packed, marked, and labeled, and are in all respects in proper condition for transport by highway according to applicable international and national government regulations and Arkansas state regulations.
If I am a large quantity generator, I certify that I have a program in place to reduce the volume and toxicity of waste generated to the degree I have determined to be economically practicable and that I have selected the practicable method of treatment, storage, or disposal currently available to me which minimizes the present and future threat to human health and the environment; OR, if I am a small quantity generator, I have made a good faith effort to minimize my waste generation and select the best waste management method that is available to me and that I can afford.

Printed/Typed Name: Danilo Gutierrez | Signature: [signature] | Month Day Year: 08 06 90

17. Transporter 1 Acknowledgement of Receipt of Materials
Printed/Typed Name: Tom Castaneda | Signature: [signature] | Month Day Year: 08 06 90

18. Transporter 2 Acknowledgement of Receipt of Materials
Printed/Typed Name: | Signature: | Month Day Year:

19. Discrepancy Indication Space
Transporter EPA ID # invalid - CAT080034184
Added waste codes to line 11A, 11B + 11C, Sect. I.
Documentation on file.

20. Facility Owner or Operator: Certification of receipt of hazardous materials covered by this manifest except as noted in Item 19.
Printed/Typed Name: Leigh Gunter | Signature: Leigh Gunter | Month Day Year: 08 17 90

GENERATOR / TRANSPORTER / FACILITY

EPA Form 8700-22 (Rev. 9-88) Previous edition is obsolete.

NOTICE: THE ORIGINAL AND NOT LESS THAN TWO (2) COPIES MUST MOVE WITH THE HAZARDOUS WASTE SHIPMENT. ONCE DELIVERED, THE TREAT-

STATE OF ARKANSAS
Department of Pollution Control and Ecology
P. O. Box 9583 Little Rock, Arkansas 72219
Telephone 501-562-7444

1

Please print or type. (Form designed for use on elite (12-pitch) typewriter.)

Form Approved. OMB No. 2050-0039. Expires 9-30-91

AR 2-90

UNIFORM HAZARDOUS WASTE MANIFEST

1. Generator's US EPA ID No. CAD008325334 — Manifest Document No. 19022

2. Page 1 of 12 — Information in the shaded areas is not required by Federal law.

3. Generator's Name and Mailing Address
Allied-Signal Aerospace Co. Electrodynamics Div.
11600 Sherman Way, No. Hollywood, CA 91605

4. Generator's Phone (818) 503-3626

A. State Manifest Document Number: AR-457122

B. State Generator's ID: CAD008325334

5. Transporter 1 Company Name: Disposal Control Services — 6. US EPA ID Number: CAT030034184

C. State Transporter's ID: 113039 PC ___ H ___

D. Transporter's Phone: 1800877-3773

7. Transporter 2 Company Name — 8. US EPA ID Number

E. State Transporter's ID: PC ___ H ___

F. Transporter's Phone

9. Designated Facility Name and Site Address
ENSCO Inc.
American Rd.
El Dorado, AK 71730

10. US EPA ID Number: ARD069748192

G. State Facility's ID

H. Facility's Phone: 501-862-2354100

GENERATOR

11. US DOT Description (Including Proper Shipping Name, Hazard Class, and ID Number)	12. Containers No.	Type	13. Total Quantity	14. Unit Wt/Vol	I. Waste No.
a. waste flammable liquid, n.o.s flammable liquid Lab Packed material (D001) UN 1993	4	DM	200	G	U196 U052 D001 U002
b. waste flammable liquid n.o.s. flammable liquid Lab Packed material (D001) UN 1993	1	DF	55	G	D001 U080
c. Hazardous waste liquid n.o.s. flammable liquid Lab Packed material UN 9189	1	DF	55	G	P030 N/R
d.					

J. Additional Descriptions for Materials Listed Above
a- Lab Packed drums 1,2,3,4 see attached list 4x55 (G)
b- Lab Packed drum #5 see attached list 1x55 (G)
c- Lab Packed drum #6 see attached list 1x55 (G)

K. Handling Codes for Wastes Listed Above

EMERGENCY RESPONSE INFORMATION:

if no alternate TSDF, return to generator

15. Special Handling Instructions and Additional Information
Profile # 108795 IIa- 766* IIb- 15* IIc- 11*
use appropiate Personal Protective equipment
LOAD # 60385

16. **GENERATOR'S CERTIFICATION:** I hereby declare that the contents of this consignment are fully and accurately described above by proper shipping name and are classified, packed, marked, and labeled, and are in all respects in proper condition for transport by highway according to applicable international and national government regulations and Arkansas state regulations.
If I am a large quantity generator, I certify that I have a program in place to reduce the volume and toxicity of waste generated to the degree I have determined to be economically practicable and that I have selected the practicable method of treatment, storage, or disposal currently available to me which minimizes the present and future threat to human health and the environment; OR, if I am a small quantity generator, I have made a good faith effort to minimize my waste generation and select the best waste management method that is available to me and that I can afford.

Printed/Typed Name: Danilo Gutierrez — Signature: [signature] — Month Day Year: 08 06 90

TRANSPORTER

17. Transporter 1 Acknowledgement of Receipt of Materials
Printed/Typed Name: Tom Castaneda — Signature: [signature] — Month Day Year: 08 06 90

18. Transporter 2 Acknowledgement of Receipt of Materials
Printed/Typed Name — Signature — Month Day Year

FACILITY

19. Discrepancy Indication Space
Transporter EPA ID # invalid - CAT090034184
Added waste codes to line 11A, 11B + 11C, Sect. I.
Documentation OK file.

20. Facility Owner or Operator: Certification of receipt of hazardous materials covered by this manifest except as noted in Item 19.
Printed/Typed Name: Leigh Gunter — Signature: Leigh Gunter — Month Day Year: 08 17 90

EPA Form 8700-22 (Rev. 9-88) Previous edition is obsolete.

NOTICE: THE ORIGINAL AND NOT LESS THAN TWO (2) COPIES MUST MOVE WITH THE HAZARDOUS WASTE SHIPMENT. ONCE DELIVERED, THE TREAT-

State of California—Health and Welfare Agency
Form Approved OMB No. 2050—0039 (Expires 9-30-91)
Please print or type. *(Form designed for use on elite (12-pitch typewriter).*

Department of Health Services
Toxic Substances Control Division
Sacramento, California

UNIFORM HAZARDOUS WASTE MANIFEST

1. Generator's US EPA ID No.: CAD008325334 — Manifest Document No.: 90021

2. Page 1 of

Information in the shaded areas is not required by Federal law.

3. Generator's Name and Mailing Address
Allied-SignallAerospace Co.-Electrodynamics Division
11600 Sherman Way, North Hollywood, CA 91605

4. Generator's Phone (818 765-1010

A. State Manifest Document Number: 88457041

B. State Generator's ID: HAHQ36032067

5. Transporter 1 Company Name: Disposal Control Service

6. US EPA ID Number: CAT030034184

C. State Transporter's ID: 113043

D. Transporter's Phone: (800) 824-3345

7. Transporter 2 Company Name

8. US EPA ID Number

E. State Transporter's ID

F. Transporter's Phone

9. Designated Facility Name and Site Address
DEMENNO KERDOON
2100 N. Alameda St.
Compton, CA 90222

10. US EPA ID Number: CAT080013352

G. State Facility's ID: CAT080013352

H. Facility's Phone: (213) 537-7100

11. US DOT Description (Including Proper Shipping Name, Hazard Class, and ID Number)	12. Containers No.	Type	13. Total Quantity	14. Unit Wt/Vol	I. Waste No.
a. Waste Petroleum Oil, n.o.s., Combustible Liquid UN 1270	001	TT	01450	G	State 221 / EPA/Other N/A
b.					State / EPA/Other
c.					State / EPA/Other
d.					State / EPA/Other

J. Additional Descriptions for Materials Listed Above
WATER SOLUBLE OIL 2%
LUBRICATING OIL 20%
HYDRAULIC OIL 60%
WATER 20%

K. Handling Codes for Wastes Listed Above
a. 01 b.
c. d.

15. Special Handling Instructions and Additional Information

USE APPROPRIATE PERSONAL PROTECTIVE EQUIPMENT

16.

GENERATOR'S CERTIFICATION: I hereby declare that the contents of this consignment are fully and accurately described above by proper shipping name and are classified, packed, marked, and labeled, and are in all respects in proper condition for transport by highway according to applicable international and national government regulations.

If I am a large quantity generator, I certify that I have a program in place to reduce the volume and toxicity of waste generated to the degree I have determined to be economically practicable and that I have selected the practicable method of treatment, storage, or disposal currently available to me which minimizes the present and future threat to human health and the environment; OR, if I am a small quantity generator, I have made a good faith effort to minimize my waste generation and select the best waste management method that is available to me and that I can afford.

Printed/Typed Name: Danilo Gutierrez — Signature: [signature] — Month Day Year: 08 07 90

17. Transporter 1 Acknowledgement of Receipt of Materials
Printed/Typed Name: Lord Driggers — Signature: [signature] — Month Day Year: 08 07 90

18. Transporter 2 Acknowledgement of Receipt of Materials
Printed/Typed Name — Signature — Month Day Year

19. Discrepancy Indication Space

20. Facility Owner or Operator Certification of receipt of hazardous materials covered by this manifest except as noted in Item 19.
Printed/Typed Name: Tevilly Salvador — Signature: [signature] — Month Day Year: 08 07 90

GENERATOR — TRANSPORTER — FACILITY

IN CASE OF AN EMERGENCY OR SPILL, CALL THE NATIONAL RESPONSE CENTER 1-800-424-8802; WITHIN CALIFORNIA CALL 1-800-852-7550

88457041

DHS 8022 A (1/88)
EPA 8700—22
(Rev. 9-88) Previous editions are obsolete.

Do Not Write Below This Line

Yellow: TSDF SENDS THIS COPY TO GENERATOR WITHIN 30 DAYS

State of California—Health and Welfare Agency
Form Approved OMB No. 2050—0039 (Expires 9-30-91)
Please print or type. (Form designed for use on elite [illegible]ch typewriter).

Department of Health Services
Toxic Substances Control Division
Sacramento, California

UNIFORM HAZARDOUS WASTE MANIFEST

1. Generator's US EPA ID No.: CAD008325334
Manifest Document No.: 900020
2. Page 1 of 2
Information in the shaded areas is not required by Federal law.

3. Generator's Name and Mailing Address
Allied-Signal Aerospace Co. - Electrodynamics Division
11600 Sherman Way, North Hollywood, CA 91605
4. Generator's Phone (818 503-3626

A. State Manifest Document Number: 88457040
B. State Generator's ID: HAHQ36032067
C. State Transporter's ID: 111551
D. Transporter's Phone: (818) 334-5117
E. State Transporter's ID:
F. Transporter's Phone:

5. Transporter 1 Company Name: Oil and Solvent Process Co.
6. US EPA ID Number: CAD008302903
7. Transporter 2 Company Name:
8. US EPA ID Number:

9. Designated Facility Name and Site Address
Oil and Solvent Process CO.
1704 W. First Street
Azusa, CA 91702
10. US EPA ID Number: CAD008302903

G. State Facility's ID: CAD008302903
H. Facility's Phone: (818) 334-5117

11. US DOT Description (Including Proper Shipping Name, Hazard Class, and ID Number)	12. Containers No.	Type	13. Total Quantity	14. Unit Wt/Vol	I. Waste No.
a. Waste Kerosene, Combustible Liquid, UN1223	003	DM	00150	G	State 221 / EPA/Other N/A
b. Waste 1,1,1, Trichloroethane orm-a, UN2831 (F001)	006	DM	00300	G	State 211 / EPA/Other F001
c. RQ, Waste Flammable Liquid, n.o.s., Flammable Liquid,UN1993, (paint and thinner)	002	DM	00100	G	State 212 / EPA/Other F003,F005
d. RQ, Waste Heptane, Flammable Liquid, UN1206	002	DM	00100	G	State 213 / EPA/Other D001

J. Additional Descriptions for Materials Listed Above
Profile a.-LAXF28609 - Kerosene
b.-LAXG93094 - 1,1,1 Trichloroethane
c.-LAXF27942 - Paint and Thinners
d.-LAXF28557 - Heptane

K. Handling Codes for Wastes Listed Above
a. 01 b. 01
c. 01 d. 01

15. Special Handling Instructions and Additional Information
USE APPROPRIATE PERSONAL PROTECTIVE EQUIPMENT

16.
GENERATOR'S CERTIFICATION: I hereby declare that the contents of this consignment are fully and accurately described above by proper shipping name and are classified, packed, marked, and labeled, and are in all respects in proper condition for transport by highway according to applicable international and national government regulations.

If I am a large quantity generator, I certify that I have a program in place to reduce the volume and toxicity of waste generated to the degree I have determined to be economically practicable and that I have selected the practicable method of treatment, storage, or disposal currently available to me which minimizes the present and future threat to human health and the environment; OR, if I am a small quantity generator, I have made a good faith effort to minimize my waste generation and select the best waste management method that is available to me and that I can afford.

Printed/Typed Name: Danilo Gutierrez
Signature: [signature]
Month Day Year: 08 09 90

17. Transporter 1 Acknowledgement of Receipt of Materials
Printed/Typed Name: ED Guerrero
Signature: [signature]
Month Day Year: 08 09 90

18. Transporter 2 Acknowledgement of Receipt of Materials
Printed/Typed Name:
Signature:
Month Day Year:

19. Discrepancy Indication Space

20. Facility Owner or Operator Certification of receipt of hazardous materials covered by this manifest except as noted in Item 19.
Printed/Typed Name: MIKE HEDDEN
Signature: [signature]
Month Day Year: 08 09 90

GENERATOR / TRANSPORTER / FACILITY

IN CASE OF AN EMERGENCY OR SPILL, CALL THE NATIONAL RESPONSE CENTER 1-800-424-8802; WITHIN CALIFORNIA CALL 1-800-852-7550

3009-87-88-89-90 / 88457040

8K

DHS 8022 A (1/88)
EPA 8700—22
(Rev. 9-88) Previous editions are obsolete.

Do Not Write Below This Line

Yellow: TSDF SENDS THIS COPY TO GENERATOR WITHIN 30

or type. (Form designed for use on elite (12-pitch) typewriter.)

Form Approved. OMB No. 2000-0404. Expires 7-31-86

UNIFORM HAZARDOUS WASTE MANIFEST
(Continuation Sheet)

21. Generator's US EPA ID No.: CAD008325334

Manifest Document No.: 90020

22. Page: 2

Information in the shaded areas is not required by Federal law.

Generator's Name
Allied-Signal Aerospace Company - Electrodynamics Div.
11600 Sherman Way, North Hollywood, CA 91605
(818) 503-3626

L. State Manifest Document Number: 88457040

M. State Generator's ID: HAHQ36032067 1115515

24. Transporter ___ Company Name: Oil and Solvent Process CO

25. US EPA ID Number: CAD008302903

N. State Transporter's ID: ~~CAD008302903~~

O. Transporter's Phone: (818)234-5117

26. Transporter ___ Company Name:

27. US EPA ID Number:

P. State Transporter's ID:

Q. Transporter's Phone:

28. US DOT Description *(Including Proper Shipping Name, Hazard Class, and ID Number)*	29. Containers No.	Type	30. Total Quantity	31. Unit Wt/Vol	R. Waste No.
a.					
b.					
c.					
d.					
e. RQ, Waste Flammable Liquid, n.o.s, UN1993 (red oil and Heptane)	2	DM	100	G	214 D001
f. ~~Waste Hydraulic Fluid / Non - RCRA Hazardous Waste - (skydrol and water)~~ NOPA ESR		~~DM~~		~~G~~	~~NA~~
g.					
h.					
i.					

S. Additional Descriptions for Materials Listed Above
PROFILE e.-LAXF28556 - Red Oil & Heptane
~~f.-LAXF28554 - skydrol and water~~

T. Handling Codes for Wastes Listed Above
01

32. Special Handling Instructions and Additional Information
USE APPROPRIATE PERSONAL PROTECTIVE EQUIPMENT

GENERATOR

33. Transporter 1 Acknowledgement of Receipt of Materials

Printed/Typed Name: ED GOGTREK
Signature: ED Gogtrek
Date: Month 08 Day 08 Year 88

34. Transporter ___ Acknowledgement of Receipt of Materials

Printed/Typed Name: ~~ED GOGTREK~~
Signature: ~~ED Gogtrek~~
Date: Month ~~08~~ Day ~~08~~ Year 88

TRANSPORTER

35. Discrepancy Indication Space

FACILITY

EPA Form 8700-22A (3-84)

State of California—Health and Welfare Agency
Form Approved OMB No. 2050—0039 (Expires 9-30-91)
Please print or type. (Form designed for use on elite (pitch typewriter).

Department of Health Services
Toxic Substances Control Division
Sacramento, California

88457039

IN CASE OF AN EMERGENCY OR SPILL, CALL THE NATIONAL RESPONSE CENTER 1-800-424-8802; WITHIN CALIFORNIA CALL 1-800-852-7550

UNIFORM HAZARDOUS WASTE MANIFEST

1. Generator's US EPA ID No.: CAD 00 83 253 34
Manifest Document No.: 9 0 0 1 9
2. Page 1 of 6
Information in the shaded areas is not required by Federal law.

3. Generator's Name and Mailing Address
Allied-Signal- Electrodynamics
11600 Sherman Way N. Hollywood CA 91605
4. Generator's Phone (818) 765-1010

A. State Manifest Document Number: 88457039
B. State Generator's ID: HAHQ36-032067

5. Transporter 1 Company Name: Disporsal Control SRV.
6. US EPA ID Number: CAT 08 00 34 1 84
C. State Transporter's ID: 113033
D. Transporter's Phone: (714) 983-0342

7. Transporter 2 Company Name:
8. US EPA ID Number:
E. State Transporter's ID:
F. Transporter's Phone:

9. Designated Facility Name and Site Address
US. Ecology
12 miles South of Beatty
Beatty NV. 89002
10. US EPA ID Number
P.O. Box 578
NZT330010000
G. State Facility's ID: NZT330010000
H. Facility's Phone: (702) 553-2203

11. US DOT Description (Including Proper Shipping Name, Hazard Class, and ID Number)	12. Containers No.	Type	13. Total Quantity	14. Unit Wt/Vol	I. Waste No.
a. WASTE Poisonous Solid NOS. Poison B. UN2811 D007	091	DF	00010	P	State 551 / EPA/Other D007
b.					State / EPA/Other
c.					State / EPA/Other
d.					State / EPA/Other

J. Additional Descriptions for Materials Listed Above
11A) Lab Pack - (ARSENIOUS OXIDE)
SEE ATTACHED INVENTORY SHEET
WS# 07-006-3508

K. Handling Codes for Wastes Listed Above
a. b. c. d.

15. Special Handling Instructions and Additional Information
WEAR Appropriate Safety Protection (1x5gal)

16.
GENERATOR'S CERTIFICATION: I hereby declare that the contents of this consignment are fully and accurately described above by proper shipping name and are classified, packed, marked, and labeled, and are in all respects in proper condition for transport by highway according to applicable international and national government regulations.

If I am a large quantity generator, I certify that I have a program in place to reduce the volume and toxicity of waste generated to the degree I have determined to be economically practicable and that I have selected the practicable method of treatment, storage, or disposal currently available to me which minimizes the present and future threat to human health and the environment; OR, if I am a small quantity generator, I have made a good faith effort to minimize my waste generation and select the best waste management method that is available to me and that I can afford.

Printed/Typed Name: Danilo Gutierrez
Signature: [signature]
Month Day Year: 07 19 90

17. Transporter 1 Acknowledgement of Receipt of Materials
Printed/Typed Name: Michael B. VanAlstine
Signature: [signature]
Month Day Year: 07 19 90

18. Transporter 2 Acknowledgement of Receipt of Materials
Printed/Typed Name:
Signature:
Month Day Year:

19. Discrepancy Indication Space

20. Facility Owner or Operator Certification of receipt of hazardous materials covered by this manifest except as noted in Item 19.
Printed/Typed Name: David Tolbert
Signature: [signature]
Month Day Year: 07 24 90

GENERATOR / TRANSPORTER / FACILITY

DHS 8022 A (1/88)
EPA 8700—22
(Rev. 9-88) Previous editions are obsolete.

Do Not Write Below This Line

Yellow: TSDF SENDS THIS COPY TO GENERATOR WITHIN 30 DAYS

State of California—Health and Welfare Agency
Form Approved OMB No. 2050—0039 (Expires 9-30-
Please print or type. (Form designed for use on elite (12 pitch typewriter).

BF 61844 - Tuppy 64
30393

Department of Health Services
Toxic Substances Control Division
Sacramento, California

UNIFORM HAZARDOUS WASTE MANIFEST

1. Generator's US EPA ID No.: CAD008325334 — Manifest Document No.: 90018
2. Page 1 of 1

Information in the shaded areas is not required by Federal law.

3. Generator's Name and Mailing Address
Allied-Signal Aerospace Company, Electrodynamics
11600 Sherman Way, N.Hollywood, CA 91605

4. Generator's Phone (818) 765-1010

A. State Manifest Document Number: 88457038
B. State Generator's ID: HAH03603 20 67

5. Transporter 1 Company Name: Disposal Control
6. US EPA ID Number: CAT030034184
C. State Transporter's ID: 113146
D. Transporter's Phone: (800)824-3345

7. Transporter 2 Company Name:
8. US EPA ID Number:
E. State Transporter's ID:
F. Transporter's Phone:

9. Designated Facility Name and Site Address
Demenno Kerdoon
2100 N. Alameda
Compton, CA 90222

10. US EPA ID Number: CAT080013352
G. State Facility's ID: CAT080013352
H. Facility's Phone: (213) 537-7100

11. US DOT Description (Including Proper Shipping Name, Hazard Class, and ID Number)	12. Containers No.	Type	13. Total Quantity	14. Unit Wt/Vol	I. Waste No.
a. Hazardous Waste liquid N.O.S., ORM-E, NA9189 (waste coolant) DOT-E7476	001	TT	02400	G	State 221 / EPA/Other N/A
b.					State / EPA/Other
c.					State / EPA/Other
d.					State / EPA/Other

J. Additional Descriptions for Materials Listed Above
Water Soluble Oils
Lubricating Oils
Water

K. Handling Codes for Wastes Listed Above
a. 01
b.
c.
d.

15. Special Handling Instructions and Additional Information
Use appropriate personal protective equipment.

16.
GENERATOR'S CERTIFICATION: I hereby declare that the contents of this consignment are fully and accurately described above by proper shipping name and are classified, packed, marked, and labeled, and are in all respects in proper condition for transport by highway according to applicable international and national government regulations.

If I am a large quantity generator, I certify that I have a program in place to reduce the volume and toxicity of waste generated to the degree I have determined to be economically practicable and that I have selected the practicable method of treatment, storage, or disposal currently available to me which minimizes the present and future threat to human health and the environment; OR, if I am a small quantity generator, I have made a good faith effort to minimize my waste generation and select the best waste management method that is available to me and that I can afford.

Printed/Typed Name: Danilo Gutierrez — Signature: — Month Day Year: 07 17 90

17. Transporter 1 Acknowledgement of Receipt of Materials
Printed/Typed Name: DAVE DADE — Signature: Dave Dade — Month Day Year: 07 18 90

18. Transporter 2 Acknowledgement of Receipt of Materials
Printed/Typed Name: — Signature: — Month Day Year:

19. Discrepancy Indication Space

20. Facility Owner or Operator Certification of receipt of hazardous materials covered by this manifest except as noted in Item 19.
Printed/Typed Name: Bill PETERS — Signature: Bill Peters — Month Day Year: 07 18 90

GENERATOR — TRANSPORTER — FACILITY

IN CASE OF AN EMERGENCY OR SPILL, CALL THE NATIONAL RESPONSE CENTER 1-800-424-8802; WITHIN CALIFORNIA CALL 1-800-852-7550

88457038

DHS 8022 A (1/88)
EPA 8700—22
(Rev. 9-88) Previous editions are obsolete.

Do Not Write Below This Line

Yellow: TSDF SENDS THIS COPY TO GENERATOR WITHIN 30 DAY

OLW 07478

State of California—Health and Welfare Agency
Form Approved OMB No. 2050—0039 (Expires 9-30-[illegible])
Please print or type. (Form designed for use on el[illegible]2-pitch typewriter).

See Instructions on Back of Page 6 and Front of [illegible] 7

Department of Health Services
Toxic Substances Control Division
Sacramento, California

88457036

IN CASE OF AN EMERGENCY OR SPILL, CALL THE NATIONAL RESPONSE CENTER 1-800-424-8802; WITHIN CALIFORNIA CALL 1-800-852-7550

UNIFORM HAZARDOUS WASTE MANIFEST

1. Generator's US EPA ID No.: CAD008325334 — Manifest Document No.: 90017
2. Page 1 of 1
Information in the shaded areas is not required by Federal law.

3. Generator's Name and Mailing Address
Allied-Signal Aerospace Co., Electrodynamics Division
11600 Sherman Way, North Hollywood, CA 91605

4. Generator's Phone (818) 765-1010

A. State Manifest Document Number: 88457036
B. State Generator's ID: HAH036032067
C. State Transporter's ID: 007375
D. Transporter's Phone: (800) 824-3345
E. State Transporter's ID:
F. Transporter's Phone:
G. State Facility's ID: CAT000646117
H. Facility's Phone: (209) 386-9711

5. Transporter 1 Company Name: Disposal Control Service
6. US EPA ID Number: CAT080034184

7. Transporter 2 Company Name:
8. US EPA ID Number:

9. Designated Facility Name and Site Address
Chemical Waste Management
35251 Old Skyline Road
Kettleman City, CA 93239

10. US EPA ID Number: CAT000646117

11. US DOT Description (Including Proper Shipping Name, Hazard Class, and ID Number)	12. Containers No.	Type	13. Total Quantity	14. Unit Wt/Vol	Waste No.
a. RQ, Hazardous Waste solid N.O.S., ORM-E, NA9189 (D007, D008, D006) (Chrome Cakes) Profile LAXG24718 Chrome Cakes	024	DF	005.88	Y	State 181; EPA/Other D006, D007, D008
b.					State; EPA/Other
c.					State; EPA/Other
d.					State; EPA/Other

J. Additional Descriptions for Materials Listed Above
Profile LAXG24718 Chrome Cakes

K. Handling Codes for Wastes Listed Above
a. b. c. d.

15. Special Handling Instructions and Additional Information
Wear appropriate personal protective equipment. (24X55541)

16.
GENERATOR'S CERTIFICATION: I hereby declare that the contents of this consignment are fully and accurately described above by proper shipping name and are classified, packed, marked, and labeled, and are in all respects in proper condition for transport by highway according to applicable international and national government regulations.

If I am a large quantity generator, I certify that I have a program in place to reduce the volume and toxicity of waste generated to the degree I have determined to be economically practicable and that I have selected the practicable method of treatment, storage, or disposal currently available to me which minimizes the present and future threat to human health and the environment; OR, if I am a small quantity generator, I have made a good faith effort to minimize my waste generation and select the best waste management method that is available to me and that I can afford.

Printed/Typed Name: Danilo Gutierrez — Signature: [signature] — Month Day Year: 06 19 90

17. Transporter 1 Acknowledgement of Receipt of Materials
Printed/Typed Name: Michael B. Van Alstine Julia Achor — Signature: [signature] — Month Day Year: 6-21-90

18. Transporter 2 Acknowledgement of Receipt of Materials
Printed/Typed Name: — Signature: — Month Day Year:

19. Discrepancy Indication Space

20. Facility Owner or Operator Certification of receipt of hazardous materials covered by this manifest except as noted in Item 19.
Printed/Typed Name: RICK A. SENIFF — Signature: [signature] — Month Day Year: 06 21 90

GENERATOR — TRANSPORTER — FACILITY

DHS 8022 A (1/88)
EPA 8700—22
(Rev. 9-88) Previous editions are obsolete.

Do Not Write Below This Line

White: TSDF SENDS THIS COPY TO DOHS WITHIN 30 DAYS
To: P.O. Box 3000, Sacramento, CA 95812

WT# 28860

State of California—Health and Welfare Agency
Form Approved OMB No. 2050—0039 (Expires 9-3[illegible])
Please print or type. (Form designed for use on [illegible] 12-pitch typewriter).

Department of Health Services
Toxic Substances Control Division
Sacramento, California

UNIFORM HAZARDOUS WASTE MANIFEST

1. Generator's US EPA ID No.: CAD008325334
Manifest Document No.: 900116
2. Page 1 of 1
Information in the shaded areas is not required by Federal law.

3. Generator's Name and Mailing Address:
ALLIED SIGNAL AEROSPACE-ELECTRODYNAMICS DIVIISION
11600 SHERMAN WAY, N. HOLLYWOOD, CA 91605

4. Generator's Phone (818 765-1010

A. State Manifest Document Number: 88457035
B. State Generator's ID: HAH036032067

5. Transporter 1 Company Name: DISPOSAL CONTROL SERVICE
6. US EPA ID Number: cat030034184
C. State Transporter's ID: 007320
D. Transporter's Phone: (800) 824-3345

7. Transporter 2 Company Name:
8. US EPA ID Number:
E. State Transporter's ID:
F. Transporter's Phone:

9. Designated Facility Name and Site Address:
DEMENNO KERDOON
2100 N. ALAMEDA ST.
COMPTON, CA 90222
10. US EPA ID Number: CAT080013352
G. State Facility's ID: CAT080013352
H. Facility's Phone: (213) 537-7100

11. US DOT Description (Including Proper Shipping Name, Hazard Class, and ID Number)	12. Containers No.	Type	13. Total Quantity	14. Unit Wt/Vol	I. Waste No.
a. HAZARDOUS WASTE LIQUID, n.o.s., ORM-E, NA9189 (clarifier waste and water)	001	TT	00500	G	State 221 / EPA/Other N/A
b.					State / EPA/Other
c.					State / EPA/Other
d.					State / EPA/Other

J. Additional Descriptions for Materials Listed Above
CLARIFIER SLUDGE,OIL AND WATER

K. Handling Codes for Wastes Listed Above
a. 01
b.
c.
d.

15. Special Handling Instructions and Additional Information
USE APPROPRIATE PERSONAL PROTECTIVE EQUIPMENT

16.
GENERATOR'S CERTIFICATION: I hereby declare that the contents of this consignment are fully and accurately described above by proper shipping name and are classified, packed, marked, and labeled, and are in all respects in proper condition for transport by highway according to applicable international and national government regulations.

If I am a large quantity generator, I certify that I have a program in place to reduce the volume and toxicity of waste generated to the degree I have determined to be economically practicable and that I have selected the practicable method of treatment, storage, or disposal currently available to me which minimizes the present and future threat to human health and the environment; OR, if I am a small quantity generator, I have made a good faith effort to minimize my waste generation and select the best waste management method that is available to me and that I can afford.

Printed/Typed Name: M. McLAUGHLIN
Signature: M. McLaughlin
Month Day Year: 060590

17. Transporter 1 Acknowledgement of Receipt of Materials
Printed/Typed Name: LAWRENCE D. KELLING
Signature: Lawrence D. Kelling
Month Day Year: 060590

18. Transporter 2 Acknowledgement of Receipt of Materials
Printed/Typed Name:
Signature:
Month Day Year:

19. Discrepancy Indication Space

20. Facility Owner or Operator Certification of receipt of hazardous materials covered by this manifest except as noted in Item 19.
Printed/Typed Name: Curtis Killings
Signature: Curtis Killings
Month Day Year: 060590

GENERATOR / TRANSPORTER / FACILITY

88457035

IN CASE OF AN EMERGENCY OR SPILL, CALL THE NATIONAL RESPONSE CENTER 1-800-424-8802; WITHIN CALIFORNIA CALL 1-800-852-7550

DHS 8022 A (1/88)
EPA 8700—22
(Rev. 9-88) Previous editions are obsolete.

Do Not Write Below This Line

O/W 06276

Yellow: TSDF SENDS THIS COPY TO GENERATOR WITHIN 30 DAYS

State of California—Health and Welfare Agency
Form Approved OMB No. 2050—0039 (Expires 9-30-[illegible])
Please print or type. *(Form designed for use on elite 12-pitch typewriter).*

Department of Health Services
Toxic Substances Control Division
Sacramento, California

UNIFORM HAZARDOUS WASTE MANIFEST

1. Generator's US EPA ID No.: CAD008325334900115
Manifest Document No.

2. Page 1 of 2

Information in the shaded areas is not required by Federal law.

3. Generator's Name and Mailing Address
ALLIED SIGNAL AEROSPACE-ELECTRODYNAMICS DIVISION
11600 SHERMAN WAY, N. HOLLYWOOD, CA 91605

4. Generator's Phone (818) 765-1010

A. State Manifest Document Number: 88457034

B. State Generator's ID: HAH036020007

5. Transporter 1 Company Name: OIL AND SOLVENT PROCESS CO
6. US EPA ID Number: CAD008302903

C. State Transporter's ID: 012178

D. Transporter's Phone: (818) 334-5117

7. Transporter 2 Company Name
8. US EPA ID Number

E. State Transporter's ID

F. Transporter's Phone

9. Designated Facility Name and Site Address
OIL AND SOLVENT PROCESS CO.
1704 W. FIRST ST.
AZUSA, CA 91702
10. US EPA ID Number: CAD008302903

G. State Facility's ID: CAD008302903

H. Facility's Phone: (818) 334-5117

11. US DOT Description (Including Proper Shipping Name, Hazard Class, and ID Number)	12. Containers No.	Type	13. Total Quantity	14. Unit Wt/Vol	I. Waste No.
a. RQ,WASTE HEPTANE, FLAMMABLE LIQUID, UN1206 (D001)	002	DM	00100	G	State 213 / EPA/Other D001
b. RQ,WASTE FLAMMABLE LIQUID,n.o.s., UN1993 (D001) (red oil and heptane)	002	DM	00100	G	State 214 / EPA/Other D001
c. RQ,WASTE FLAMMABLE LIQUID,n.o.s.,FLAMMABLE LIQUID, UN1993(F003,F005) (Paint and thinners)	002	DM	00100	G	State 212 / EPA/Other F003,F005
d. WASTE KEROSENE, COMBUSTIBLE LIQUID, UN1223	001	DM	00050	G	State 221 / EPA/Other NA

J. Additional Descriptions for Materials Listed Above
PROFILE a) LAXF28557 - Heptane
b) LAXF28556 - Red oil and Heptane
c) LAXF27942 - Paint and thinners
d) LAXF28609 - Kerosene

K. Handling Codes for Wastes Listed Above
a. 01 b. 01
c. 01 d. 01

15. Special Handling Instructions and Additional Information
USE APPROPRIATE PERSOANL PROTECTIVE EQUIPMENT

16. GENERATOR'S CERTIFICATION: I hereby declare that the contents of this consignment are fully and accurately described above by proper shipping name and are classified, packed, marked, and labeled, and are in all respects in proper condition for transport by highway according to applicable international and national government regulations.

If I am a large quantity generator, I certify that I have a program in place to reduce the volume and toxicity of waste generated to the degree I have determined to be economically practicable and that I have selected the practicable method of treatment, storage, or disposal currently available to me which minimizes the present and future threat to human health and the environment; OR, if I am a small quantity generator, I have made a good faith effort to minimize my waste generation and select the best waste management method that is available to me and that I can afford.

Printed/Typed Name: M. McLaughlin
Signature: M. McLaughlin
Month Day Year: 06 07 90

TRANSPORTER

17. Transporter 1 Acknowledgement of Receipt of Materials
Printed/Typed Name: E.D. Guerrero
Signature: E.D. Guerrero
Month Day Year: 06 07 90

18. Transporter 2 Acknowledgement of Receipt of Materials
Printed/Typed Name
Signature
Month Day Year

FACILITY

19. Discrepancy Indication Space

20. Facility Owner or Operator Certification of receipt of hazardous materials covered by this manifest except as noted in Item 19.
Printed/Typed Name: MIKE HEDDEN
Signature: Mike Hedden
Month Day Year: 06 09 90

Do Not Write Below This Line

DHS 8022 A (1/88)
EPA 8700—22
(Rev. 9-88) Previous editions are obsolete.

Yellow: TSDF SENDS THIS COPY TO GENERATOR WITHIN 30 DAYS

GENERATOR

IN CASE OF AN EMERGENCY OR SPILL, CALL THE NATIONAL RESPONSE CENTER 1-800-424-8802; WITHIN CALIFORNIA CALL 1-800-852-7550

88457034

Type. (Form designed for use on elite (12-pitch) typewriter.)

Form Approved. OMB No. 2000-0404. Expires 7-31-86

NIFORM HAZARDOUS WASTE MANIFEST
(Continuation Sheet)

21. Generator's US EPA ID No. C A D 0 0 8 3 2 5 3 3 4

Manifest Document No. 9 0 0 1 5

22. Page 2

Information in the shaded areas is not required by Federal law.

23. Generator's Name
ALLIED SIGNAL AEROSPACE-ELECTRODYNAMICS DIVISION
11600 SHERMAN WAY
N. HOLLYWOOD, CA 91605 (818) 765-1010

L. State Manifest Document Number 88457034

M. State Generator's ID hahq 36032067

24. Transporter ___ Company Name
OIL AND SOLVENT PROCESS CO.

25. US EPA ID Number C A D 0 0 8 3 0 2 9 0 3

N. State Transporter's ID CAD008302903

O. Transporter's Phone (818)234-5117

26. Transporter ___ Company Name

27. US EPA ID Number

P. State Transporter's ID

Q. Transporter's Phone

28. US DOT Description (Including Proper Shipping Name, Hazard Class, and ID Number)	29. Containers No.	Type	30. Total Quantity	31. Unit Wt/Vol	R. Waste No.
a.					
b.					
c.					
d.					
e. WASTE 1,1,1-TRICHLOROETHANE, ORM-A, UN 2831	005 ~~0 0 5~~	DM	0 0 200 ~~1 50~~	G	211 F001
f. WASTE HYDRAULIC FLUID, ~~CALIFORNIA REGULATED ONLY~~ (SKYDROL AND WATER) Non-RCRA Haz-work.	0 0 8	DM	0 0 4 00	G	221 NA
g.					
h.					
i.					

S. Additional Descriptions for Materials Listed Above
e) profile LAXG93094
f) LAXF28554

T. Handling Codes for Wastes Listed Above

32. Special Handling Instructions and Additional Information
USE APPROPRIATE PERSONAL PROTECTIVE EQUIPMENT

GENERATOR

TRANSPORTER

33. Transporter ___ Acknowledgement of Receipt of Materials

Printed/Typed Name | Signature | Date Month Day Year

34. Transporter ___ Acknowledgement of Receipt of Materials

Printed/Typed Name | Signature | Date Month Day Year

FACILITY

35. Discrepancy Indication Space

EPA Form 8700-22A (3-84)

State of California—Health and Welfare Agency
Form Approved OMB No. 2050—0039 (Expires 9-30-
Please print or type. (Form designed for use on eli pitch typewriter).

WT # 28573

Department of Health Services
Toxic Substances Control Division
Sacramento, California

UNIFORM HAZARDOUS WASTE MANIFEST

1. Generator's US EPA ID No. CAD008326334 | Manifest Document No. 0014

2. Page 1 of 1

Information in the shaded areas is not required by Federal law.

3. Generator's Name and Mailing Address
ALLIED SIGNAL AEROSPACE-ELECTRODYNAMICS DIVISION
11600 SHERMAN WAY, N. HOLLYWOOD, CA 91605

4. Generator's Phone (818) 765-1010

A. State Manifest Document Number 88457033

B. State Generator's ID HAH036032067

5. Transporter 1 Company Name: DISPOSAL CONTROL SERVICE

6. US EPA ID Number: CAT030034184

C. State Transporter's ID 007370

D. Transporter's Phone (800) 824-3345

7. Transporter 2 Company Name

8. US EPA ID Number

E. State Transporter's ID

F. Transporter's Phone

9. Designated Facility Name and Site Address
DEMENNO KERDOON
2100 N. Alameda St.
Compton, CA 90222

10. US EPA ID Number: CAT080013352

G. State Facility's ID CAT080013352

H. Facility's Phone (213) 537-7100

11. US DOT Description (Including Proper Shipping Name, Hazard Class, and ID Number)	12. Containers No.	Type	13. Total Quantity	14. Unit Wt/Vol	I. Waste No.
a. WASTE PETROLEUM OIL, n.o.s., COMBUSTIBLE LIQUID UN 1270	001	TT	1600	G	State 221 / EPA/Other N/A
b.					State / EPA/Other
c.					State / EPA/Other
d.					State / EPA/Other

J. Additional Descriptions for Materials Listed Above
WATER SOLUBLE OIL 2%
LUBRICATING OIL 20%
HYDRAULIC OIL 60%
WATER 20%

K. Handling Codes for Wastes Listed Above
a. D1 b. c. d.

15. Special Handling Instructions and Additional Information
USE APPROPRIATE PERSONAL PROTECTIVE EQUIPMENT

16. GENERATOR'S CERTIFICATION: I hereby declare that the contents of this consignment are fully and accurately described above by proper shipping name and are classified, packed, marked, and labeled, and are in all respects in proper condition for transport by highway according to applicable international and national government regulations.

If I am a large quantity generator, I certify that I have a program in place to reduce the volume and toxicity of waste generated to the degree I have determined to be economically practicable and that I have selected the practicable method of treatment, storage, or disposal currently available to me which minimizes the present and future threat to human health and the environment; OR, if I am a small quantity generator, I have made a good faith effort to minimize my waste generation and select the best waste management method that is available to me and that I can afford.

GENERATOR — Printed/Typed Name: Mary McLaughlin — Signature: Mary McLaughlin — Month Day Year: 05 25 90

TRANSPORTER — 17. Transporter 1 Acknowledgement of Receipt of Materials
Printed/Typed Name: PHILLIP FARLEY — Signature: Phillip Farley — Month Day Year: 05 25 90

18. Transporter 2 Acknowledgement of Receipt of Materials
Printed/Typed Name — Signature — Month Day Year

FACILITY — 19. Discrepancy Indication Space
OK

20. Facility Owner or Operator Certification of receipt of hazardous materials covered by this manifest except as noted in Item 19.
Printed/Typed Name: Curtis K. Illings — Signature: Curtis Illings — Month Day Year: 05 25 90

IN CASE OF AN EMERGENCY OR SPILL, CALL THE NATIONAL RESPONSE CENTER 1-800-424-8802; WITHIN CALIFORNIA CALL 1-800-852-7550

88457033

DHS 8022 A (1/88)
EPA 8700—22
(Rev. 9-88) Previous editions are obsolete.

Do Not Write Below This Line

OIW 06076

Yellow: TSDF SENDS THIS COPY TO GENERATOR WITHIN 30 DAYS

State of California—Health and Welfare Agency
Approved OMB No. 2050—0039 (Expires 9-30-91)
Please print or type. (Form designed for use on elite (12-pitch) typewriter).

WT 28251

Department of Health Services
Toxic Substances Control Division
Sacramento, California

UNIFORM HAZARDOUS WASTE MANIFEST

1. Generator's US EPA ID No.: CAD008325334
Manifest Document No.: 90013
2. Page 1 of 1

Information in the shaded areas is not required by Federal law.

3. Generator's Name and Mailing Address
ALLIED SIGNAL AEROSPACE-ELECTRODYNAMICS DIVISION
11600 SHERMAN WAY, N. HOLLYWOOD, CA 91605

4. Generator's Phone (818) 765-1010

A. State Manifest Document Number: 88457032
B. State Generator's ID: HAW036032067

5. Transporter 1 Company Name: DISPOSAL CONTROL SERVICE
6. US EPA ID Number: CAT030034184
C. State Transporter's ID: 01-3063
D. Transporter's Phone: (800) 824-3345

7. Transporter 2 Company Name
8. US EPA ID Number
E. State Transporter's ID
F. Transporter's Phone

9. Designated Facility Name and Site Address
DEMENNO KERDOON
2100 N. ALAMEDA ST.
COMPTON, CA 90222
10. US EPA ID Number: CAT080013352
G. State Facility's ID: CAT080013352
H. Facility's Phone: (213) 537-7100

11. US DOT Description (Including Proper Shipping Name, Hazard Class, and ID Number)	12. Containers No.	Type	13. Total Quantity	14. Unit Wt/Vol	I. Waste No.
a. HAZARDOUS WASTE LIQUID,n.o.s., ORM-E, NA9189 (waste coolant)	001	TT	02500	G	State; EPA/Other 221; N/A
b.					State; EPA/Other
c.					State; EPA/Other
d.					State; EPA/Other

J. Additional Descriptions for Materials Listed Above
WATER SOLUBLE OILS
LUBRICATING OILS
WATER

K. Handling Codes for Wastes Listed Above
a. 01
b.
c.
d.

15. Special Handling Instructions and Additional Information
USE APPROPRIATE PERSONAL PROTECTIVE EQUIPMENT

16. GENERATOR'S CERTIFICATION: I hereby declare that the contents of this consignment are fully and accurately described above by proper shipping name and are classified, packed, marked, and labeled, and are in all respects in proper condition for transport by highway according to applicable international and national government regulations.

If I am a large quantity generator, I certify that I have a program in place to reduce the volume and toxicity of waste generated to the degree I have determined to be economically practicable and that I have selected the practicable method of treatment, storage, or disposal currently available to me which minimizes the present and future threat to human health and the environment; OR, if I am a small quantity generator, I have made a good faith effort to minimize my waste generation and select the best waste management method that is available to me and that I can afford.

Printed/Typed Name: M. McLAUGHLIN
Signature: [signature]
Month Day Year: 05 16 90

17. Transporter 1 Acknowledgement of Receipt of Materials
Printed/Typed Name: Jack E. Ray Sr
Signature: Jack E. Ray Sr
Month Day Year: 05 16 90

18. Transporter 2 Acknowledgement of Receipt of Materials
Printed/Typed Name
Signature
Month Day Year

19. Discrepancy Indication Space

20. Facility Owner or Operator Certification of receipt of hazardous materials covered by this manifest except as noted in Item 19.
Printed/Typed Name: Curtis Killings
Signature: Curtis Killings
Month Day Year: 05 16 90

GENERATOR
TRANSPORTER
FACILITY

IN CASE OF AN EMERGENCY OR SPILL, CALL THE NATIONAL RESPONSE CENTER 1-800-424-8802; WITHIN CALIFORNIA

DHS 8022 A (1/88)
EPA 8700—22
(Rev. 9-88) Previous editions are obsolete.

Do Not Write Below This Line

Yellow: TSDF SENDS THIS COPY TO GENERATOR WITHIN 30 DAYS

01W05772

State of California—Health and Welfare Agency
Form Approved OMB No. 2050—0039 (Expires 9-30-9[illegible])
Please print or type. (Form designed for use on elite (pitch typewriter).

Department of Health Services
Toxic Substances Control Division
Sacramento, California

UNIFORM HAZARDOUS WASTE MANIFEST

1. Generator's US EPA ID No.: CAD008325334
Manifest Document No.: 90012

2. Page 1 of 1

Information in the shaded areas is not required by Federal law.

3. Generator's Name and Mailing Address
ALLIED SIGNAL AEROSPACE - ELECTRODYNAMICS DIVISION
11600 SHERMAN WAY, N. HOLLYWOOD, CA 91605

4. Generator's Phone (818) 765-1010

A. State Manifest Document Number: 88457031

B. State Generator's ID: HAH036032067

5. Transporter 1 Company Name: DISPOSAL CONTROL SERVICE

6. US EPA ID Number: CAT030034184

C. State Transporter's ID: 007319

D. Transporter's Phone: (800)824-3345

7. Transporter 2 Company Name:

8. US EPA ID Number:

E. State Transporter's ID:

F. Transporter's Phone:

9. Designated Facility Name and Site Address
USPCI,GRASSY MOUNTAIN FACILITY
3 MILES EAST,7 MILES NORTH OF KNOLLS EXIT 180
BLIZE, UTAH

10. US EPA ID Number: UTD991301748

G. State Facility's ID: UTD991301748

H. Facility's Phone: (801) 534-0054

11. US DOT Description (Including Proper Shipping Name, Hazard Class, and ID Number)	12. Containers No.	Type	13. Total Quantity	14. Unit Wt/Vol	I. Waste No.
a. RQ,WASTE CORROSIVE SOLID,n.o.s., CORROSIVE MATERIAL UN1759(D002) (CHROMIC ACID SLUDGE)	00	DF	00.75	y	State / EPA/Other D002
b.					State / EPA/Other
c.					State / EPA/Other
d.					State / EPA/Other

J. Additional Descriptions for Materials Listed Above
PROFILE 31196 - CHROMIC ACID SLUDGE

K. Handling Codes for Wastes Listed Above
a. b. c. d.

15. Special Handling Instructions and Additional Information
USE APPROPRIATE PERSONAL PROTECTIVE EQUIPMENT

16.
GENERATOR'S CERTIFICATION: I hereby declare that the contents of this consignment are fully and accurately described above by proper shipping name and are classified, packed, marked, and labeled, and are in all respects in proper condition for transport by highway according to applicable international and national government regulations.

If I am a large quantity generator, I certify that I have a program in place to reduce the volume and toxicity of waste generated to the degree I have determined to be economically practicable and that I have selected the practicable method of treatment, storage, or disposal currently available to me which minimizes the present and future threat to human health and the environment; OR, if I am a small quantity generator, I have made a good faith effort to minimize my waste generation and select the best waste management method that is available to me and that I can afford.

Printed/Typed Name: M. McLaughlin
Signature: M. McLaughlin
Month Day Year: 042390

17. Transporter 1 Acknowledgement of Receipt of Materials
Printed/Typed Name: Jimmy Lizardo
Signature: Jimmy Lizardo
Month Day Year: 042390

18. Transporter 2 Acknowledgement of Receipt of Materials
Printed/Typed Name:
Signature:
Month Day Year:

19. Discrepancy Indication Space

20. Facility Owner or Operator Certification of receipt of hazardous materials covered by this manifest except as noted in Item 19.
Printed/Typed Name: Sara Critchlow
Signature: Sara Critchlow
Month Day Year: 050390

GENERATOR

TRANSPORTER

FACILITY

88457031

IN CASE OF AN EMERGENCY OR SPILL, CALL THE NATIONAL RESPONSE CENTER 1-800-424-8802; WITHIN CALIFORNIA CALL 1-800-852-7550

DHS 8022 A (1/88)
EPA 8700—22
(Rev. 9-88) Previous editions are obsolete.

Do Not Write Below This Line

Yellow: TSDF SENDS THIS COPY TO GENERATOR WITHIN 30 DAYS

State of California—Health and Welfare Agency
Form Approved OMB No. 2050—0039 (Expires 9-30-91)
Please print or type. (Form designed for use on el[illegible]2-pitch typewriter).

1515

Department of Health Services
Toxic Substances Control Division
Sacramento, California

88457030

IN CASE OF AN EMERGENCY OR SPILL, CALL THE NATIONAL RESPONSE CENTER 1-800-424-8802; WITHIN CALIFORNIA CALL 1-800-852-7550

UNIFORM HAZARDOUS WASTE MANIFEST

1. Generator's US EPA ID No.: CAD008325334
Manifest Document No.: 90011
2. Page 1 of 1

Information in the shaded areas is not required by Federal law.

3. Generator's Name and Mailing Address
ALLIED SIGNAL AEROSPACE-ELECTRODYNAMICS DIVISION
11600 SHERMAN WAY, N. HOLLYWOOD, CA 91605

4. Generator's Phone (818) 765-1010

A. State Manifest Document Number: 88457030
B. State Generator's ID: HAH036032067
C. State Transporter's ID: 013064
D. Transporter's Phone: (800) 824-3345
E. State Transporter's ID:
F. Transporter's Phone:
G. State Facility's ID: CAT000646117
H. Facility's Phone: (209) 386-9711

5. Transporter 1 Company Name: DISPOSAL CONTROL SERVICE
6. US EPA ID Number: CAT080034184
7. Transporter 2 Company Name:
8. US EPA ID Number:

9. Designated Facility Name and Site Address
CHEMICAL WASTE MANAGEMENT
35251 OLD SKYLINE ROAD
KETTLEMAN CITY, CA 93239

10. US EPA ID Number: CAT000646117

11. US DOT Description (Including Proper Shipping Name, Hazard Class, and ID Number)	12. Containers No.	Type	13. Total Quantity	14. Unit Wt/Vol	I. Waste No.
a. HAZARDOUS WASTE LIQUID,n.o.s., ORM-E,NA9189 (D006) (clarifier waste)	001	TT	015010	G	State / EPA/Other 135 D006
b.					State / EPA/Other
c.					State / EPA/Oth
d.					State / EPA/Oth

J. Additional Descriptions for Materials Listed Above
Profile LAX J89183 clarifier waste

K. Handling Codes for Wastes Listed Above
a. 15/03
b.
c.
d.

15. Special Handling Instructions and Additional Information
WEAR APPROPRIATE PERSONAL PROTECTIVE EQUIPMENT DOT-E-7476

16.
GENERATOR'S CERTIFICATION: I hereby declare that the contents of this consignment are fully and accurately described above by proper shipping name and are classified, packed, marked, and labeled, and are in all respects in proper condition for transport by highway according to applicable international and national government regulations.

If I am a large quantity generator, I certify that I have a program in place to reduce the volume and toxicity of waste generated to the degree I have determined to be economically practicable and that I have selected the practicable method of treatment, storage, or disposal currently available to me which minimizes the present and future threat to human health and the environment; OR, if I am a small quantity generator, I have made a good faith effort to minimize my waste generation and select the best waste management method that is available to me and that I can afford.

Printed/Typed Name	Signature	Month Day Year
Mary McLaughlin	Mary McLaughlin	04 10 90

17. Transporter 1 Acknowledgement of Receipt of Materials

Printed/Typed Name	Signature	Month Day Year
James Axel	[signature]	04 10 90

18. Transporter 2 Acknowledgement of Receipt of Materials

Printed/Typed Name	Signature	Month Day Year

19. Discrepancy Indication Space
13) Rec'd 998 Gallons
H I. Incorrect E.P.A
Resolved w/ Mary McLaughlin 4/12/90 PW
OK to dump No H/H A for Steve P.

20. Facility Owner or Operator Certification of receipt of hazardous materials covered by this manifest except as noted in Item 19.

Printed/Typed Name	Signature	Month Day Year
ALAN MANEY	Alan Maney	04 10 90

DHS 8022 A (1/88)
EPA 8700—22
(Rev. 9-88) Previous editions are obsolete.

Do Not Write Below This Line

27732-18

Yellow: TSDF SENDS THIS COPY TO GENERATOR WITHIN 30 DAYS

State of California—Health and Welfare Agency
Form Approved OMB No. 2050—0039 (Expires 9-30-91)
Please print or type. (Form designed for use on elite (12-pitch) typewriter).

See Instructions on Back of Page 6 and Front of Page 1

Department of Health Services
Toxic Substances Control Division
Sacramento, California

UNIFORM HAZARDOUS WASTE MANIFEST

1. Generator's US EPA ID No.: CAD008325334
Manifest Document No.: 90010
2. Page 1 of 1
Information in the shaded areas is not required by Federal law.

3. Generator's Name and Mailing Address
ALLIED SIGNAL AEROSPACE-ELECTRODYNAMICS DIVISION
11600 SHERMAN WAY, N. HOLLYWOOD, CA 91605
4. Generator's Phone (818) 765-1010

A. State Manifest Document Number: 88457029
B. State Generator's ID: HAHQ36032067

5. Transporter 1 Company Name: DISPOSAL CONTROL SERVICE
6. US EPA ID Number: CAT080034184
C. State Transporter's ID: 007319
D. Transporter's Phone: (800) 824-3345

7. Transporter 2 Company Name
8. US EPA ID Number
E. State Transporter's ID
F. Transporter's Phone

9. Designated Facility Name and Site Address
CHEMICAL WASTE MANAGEMENT
35251 OLD SKYLINE ROAD
KETTLEMAN CITY, CA 93239
10. US EPA ID Number: CAT000646117
G. State Facility's ID: CAT000646117
H. Facility's Phone: (209) 386-9711

11. US DOT Description (Including Proper Shipping Name, Hazard Class, and ID Number)	12. Containers No.	Type	13. Total Quantity	14. Unit Wt/Vol	I. Waste No.
a. RQ,HAZARDOUS WASTE SOLID, n.o.s., ORM-E,NA9189 (D007,D008,D006) (CHROME CAKES)	015	DF	4.75	Y	State 181; EPA/Other D006,D007,D008
b. HAZARDOUS WASTE SOLID,n.o.s., ORM-E,NA9189 (D006,D007,D008) (ALUMINUM OXIDE DUST)	003	DF	01800	P	State 181; EPA/Other D006,D007,D008
c.					State; EPA/Other
d.					State; EPA/Other

J. Additional Descriptions for Materials Listed Above
a. Profile LAXG24718 Chrome cakes
b. LAXK09683 Aluminum oxide dust

K. Handling Codes for Wastes Listed Above
a. 03
b. 03
c.
d.

15. Special Handling Instructions and Additional Information
WEAR APPROPRIATE PERSOANAL PROTECTIVE EQUIPMENT

16.
GENERATOR'S CERTIFICATION: I hereby declare that the contents of this consignment are fully and accurately described above by proper shipping name and are classified, packed, marked, and labeled, and are in all respects in proper condition for transport by highway according to applicable international and national government regulations.

If I am a large quantity generator, I certify that I have a program in place to reduce the volume and toxicity of waste generated to the degree I have determined to be economically practicable and that I have selected the practicable method of treatment, storage, or disposal currently available to me which minimizes the present and future threat to human health and the environment; **OR**, if I am a small quantity generator, I have made a good faith effort to minimize my waste generation and select the best waste management method that is available to me and that I can afford.

Printed/Typed Name: M. McLaughlin
Signature: Mary McLaughlin
Month Day Year: 04 05 90

TRANSPORTER

17. Transporter 1 Acknowledgement of Receipt of Materials
Printed/Typed Name: Dave Di Tolla
Signature: Dave Di Tolla
Month Day Year: 04 06 90

Printed/Typed Name: Jimmy Lizardo
Signature: Jimmy Lizardo
Month Day Year: 04 05 90

18. Transporter 2 Acknowledgement of Receipt of Materials
Printed/Typed Name
Signature
Month Day Year

FACILITY

19. Discrepancy Indication Space

20. Facility Owner or Operator Certification of receipt of hazardous materials covered by this manifest except as noted in Item 19.
Printed/Typed Name: Jill Martinez
Signature
Month Day Year: 04 06 90

Do Not Write Below This Line

IN CASE OF AN EMERGENCY OR SPILL, CALL THE NATIONAL RESPONSE CENTER 1-800-424-8802; WITHIN CALIFORNIA CALL 1-800-852-7550

GENERATOR

88457029

DHS 8022 A (1/88)
EPA 8700—22
(Rev. 9-88) Previous editions are obsolete.

White: TSDF SENDS THIS COPY TO DOHS WITHIN 30 DAYS
To: P.O. Box 3000, Sacramento, CA 95812

BPS0176
HPG564

of California—Health and Welfare Agency
Approved OMB No. 2050—0039 (Expires 9-30-91)
se print or type. (Form designed for use on elite ch typewriter).

Department of Health Services
Toxic Substances Control Division
Sacramento, California

UNIFORM HAZARDOUS WASTE MANIFEST

1. Generator's US EPA ID No.: CAD008325334
Manifest Document No.: 90009

2. Page 1 of 1

Information in the shaded areas is not required by Federal law.

3. Generator's Name and Mailing Address
ALLIED SIGNAL AEROSPACE-ELECTRODYNAMICS DIVISION
11600 SHERMAN WAY, N. HOLLYWOOD, CA 91605

4. Generator's Phone (818) 765-1010

A. State Manifest Document Number: 88457028

B. State Generator's ID: NAH036032067

5. Transporter 1 Company Name: DISPOSAL CONTROL SERVICE

6. US EPA ID Number: CAT030034184

C. State Transporter's ID: 002353

D. Transporter's Phone: (800)824-3245

7. Transporter 2 Company Name:

8. US EPA ID Number:

E. State Transporter's ID:

F. Transporter's Phone:

9. Designated Facility Name and Site Address
DEMENNO KERDOON
2100 N. ALAMDA ST.
COMPTON, CA 90222

10. US EPA ID Number: CAT080013352

G. State Facility's ID: CAT080013352

H. Facility's Phone: (213) 537-7100

11. US DOT Description (Including Proper Shipping Name, Hazard Class, and ID Number)	12. Containers No.	Type	13. Total Quantity	14. Unit Wt/Vol	I. Waste No.
a. HAZARDOUS WASTE LIQUID,n.o.s., ORM-E, NA9189 (waste coolant)	001	TT	042100	G	State: EPA/Other: 221
b.					State: N/A EPA/Other:
c.					State: EPA/Other:
d.					State: EPA/Other:

J. Additional Descriptions for Materials Listed Above
WATER SOLUBLE OILS
LUBRICATING OILS
WATER

K. Handling Codes for Wastes Listed Above
a. 01
b.
c.
d.

15. Special Handling Instructions and Additional Information
USE APPROPRIATE PERSOANAL PROTECTIVE EQUIPMENT

16.
GENERATOR'S CERTIFICATION: I hereby declare that the contents of this consignment are fully and accurately described above by proper shipping name and are classified, packed, marked, and labeled, and are in all respects in proper condition for transport by highway according to applicable international and national government regulations.

If I am a large quantity generator, I certify that I have a program in place to reduce the volume and toxicity of waste generated to the degree I have determined to be economically practicable and that I have selected the practicable method of treatment, storage, or disposal currently available to me which minimizes the present and future threat to human health and the environment; OR, if I am a small quantity generator, I have made a good faith effort to minimize my waste generation and select the best waste management method that is available to me and that I can afford.

Printed/Typed Name: M. McLAUGHLIN
Signature: M. McLaughlin
Month Day Year: 03 23 90

17. Transporter 1 Acknowledgement of Receipt of Materials
Printed/Typed Name: DAVE DADE
Signature: Dave Dade
Month Day Year: 03 23 90

18. Transporter 2 Acknowledgement of Receipt of Materials
Printed/Typed Name:
Signature:
Month Day Year:

19. Discrepancy Indication Space

20. Facility Owner or Operator Certification of receipt of hazardous materials covered by this manifest except as noted in Item 19.
Printed/Typed Name: Curtis Killings
Signature: Curtis E Killings
Month Day Year: 03 23 90

GENERATOR

TRANSPORTER

FACILITY

88457028

IN CASE OF AN EMERGENCY OR SPILL, CALL THE NATIONAL RESPONSE CENTER 1-800-424-8802; WITHIN CALIFORNIA CALL 1-800-852-7550

DHS 8022 A (1/88)
EPA 8700—22
(Rev. 9-88) Previous editions are obsolete.

Do Not Write Below This Line

Yellow: TSDF SENDS THIS COPY TO GENERATOR WITHIN 30 DAYS

NW 04249

State of California—Health and Welfare Agency
Form Approved OMB No. 2050—0039 (Expires 9-30-91)
Please print or type. (Form designed for use on elite (pitch typewriter).

Department of Health Services
Toxic Substances Control Division
Sacramento, California

UNIFORM HAZARDOUS WASTE MANIFEST

1. Generator's US EPA ID No.: CAD008325334 — Manifest Document No.: 90008
2. Page 1 of 2 — Information in the shaded areas is not required by Federal law.

3. Generator's Name and Mailing Address
ALLIED SIGNAL AEROSPACE-ELECTRODYNAMICS DIVISION
11600 SHERMAN WAY, N. HOLLYWOOD, CA 91605
4. Generator's Phone (818) 765-1010

A. State Manifest Document Number: 88457027
B. State Generator's ID: HAH036032067
C. State Transporter's ID: 012128
D. Transporter's Phone: (818) 334-5117
E. State Transporter's ID:
F. Transporter's Phone:

5. Transporter 1 Company Name: OIL AND SOLVENT PROCESS CO
6. US EPA ID Number: CAD008302903
7. Transporter 2 Company Name:
8. US EPA ID Number:

9. Designated Facility Name and Site Address
OIL AND SOLVENT PROCESS CO
1704 W. FIRST ST
AZUSA, CA 91702
10. US EPA ID Number: CAD008302903

G. State Facility's ID: CAD008302903
H. Facility's Phone: (818) 334-5117

11. US DOT Description (Including Proper Shipping Name, Hazard Class, and ID Number)	12. Containers No.	Type	13. Total Quantity	14. Unit Wt/Vol	I. Waste No.
a. RQ,WASTE HEPTANE, FLAMMABLE LIQUID,UN1206 (D001)	02 001	DM	100 00050	G	State 213 EPA/Other D001
b. RQ,WASTE FLAMMABLE LIQUID,n.o.s.,FLAMMABLE LIQUID, UN1993(D001) (red oil and heptane)	001	DM	00050	G	State 214 EPA/Other D001
c. RQ,WASTE FLAMMABLE LIQUID,n.o.s.,FLAMMABLE LIQUID, UN1993(F003,F005) (paint and thinners)	001	DM	00050	G	State 212 EPA/Other F003,F005
d. WASTE KEROSENE, COMBUSTIBLE LIQUID, UN1223	001	DM	00050	G	State 221 EPA/Other N/A

J. Additional Descriptions for Materials Listed Above
PROFILE a.-LAXF28557- Heptane
b.-LAXF28556-Red oil and heptane
c.-LAXF27942- Paint and thinners
d.-LAXF28609- Kerosene

K. Handling Codes for Wastes Listed Above
a. 01 b. 01
c. 01 d. 01

15. Special Handling Instructions and Additional Information
USE APPROPRIATE PERSONAL PROTECTIVE EQUIPMENT

16.
GENERATOR'S CERTIFICATION: I hereby declare that the contents of this consignment are fully and accurately described above by proper shipping name and are classified, packed, marked, and labeled, and are in all respects in proper condition for transport by highway according to applicable international and national government regulations.

If I am a large quantity generator, I certify that I have a program in place to reduce the volume and toxicity of waste generated to the degree I have determined to be economically practicable and that I have selected the practicable method of treatment, storage, or disposal currently available to me which minimizes the present and future threat to human health and the environment; OR, if I am a small quantity generator, I have made a good faith effort to minimize my waste generation and select the best waste management method that is available to me and that I can afford.

Printed/Typed Name: Tracy McLaughlin — Signature: Tracy McLaughlin — Month Day Year: 02 28 90

17. Transporter 1 Acknowledgement of Receipt of Materials
Printed/Typed Name: ED. Guerrero — Signature: ED Guerrero — Month Day Year: 02 28 90

18. Transporter 2 Acknowledgement of Receipt of Materials
Printed/Typed Name: — Signature: — Month Day Year:

19. Discrepancy Indication Space

20. Facility Owner or Operator Certification of receipt of hazardous materials covered by this manifest except as noted in Item 19.
Printed/Typed Name: Polly Teague — Signature: Polly Teague — Month Day Year: 03 28 90

GENERATOR — TRANSPORTER — FACILITY

IN CASE OF AN EMERGENCY OR SPILL, CALL THE NATIONAL RESPONSE CENTER 1-800-424-8802; WITHIN CALIFORNIA CALL 1-800-852-7550

88457027

DHS 8022 A (1/88)
EPA 8700—22
(Rev. 9-88) Previous editions are obsolete.

Do Not Write Below This Line

Yellow: TSDF SENDS THIS COPY TO GENERATOR WITHIN 30 DAYS

Print or type. (Form designed for use on elite (12-pitch) typewriter.)

Form Approved. OMB No. 2000-0404. Expires 7-31-86

UNIFORM HAZARDOUS WASTE MANIFEST (Continuation Sheet)

21. Generator's US EPA ID No.: CAD008325334

Manifest Document No.: 90008

22. Page: 2

Information in the shaded areas is not required by Federal law.

23. Generator's Name
ALLIED SIGNAL AEROSPACE - ELECTRODYNAMICS DIVISION
11600 SHERMAN WAY, N. HOLLYWOOD, CA 91605
(818) 765-1010

L. State Manifest Document Number: 88457027

M. State Generator's ID: ILAHO3 6032067

24. Transporter ____ Company Name: OIL AND SOLVENT PROCESS

25. US EPA ID Number: CAD008302903

N. State Transporter's ID: [illegible]

26. Transporter ____ Company Name:

27. US EPA ID Number:

O. Transporter's Phone: (818) 334-5117

P. State Transporter's ID:

Q. Transporter's Phone:

28. US DOT Description (Including Proper Shipping Name, Hazard Class, and ID Number)	29. Containers No.	Type	30. Total Quantity	31. Unit Wt/Vol	R. Waste No.
a.					
b.					
c.					
d.					
e. WASTE ORM-A,n.o.s., ORM-A,NA1693 (F001) (waste freon)	001	DM	00050	G	741 F001
f. WASTE,1,1,1-TRICHLOROETHANE,)ORM-A, UN2831 (F001)	~~00~~ 001	DM	~~100~~ 00050	G	211 F001
g.					
h.					
i.					

S. Additional Descriptions for Materials Listed Above

e. Profile LAXG93212 - Freon 87000887
f. LAXG93094 - 1,1,1,-Trichloroethane 87000888

T. Handling Codes for Wastes Listed Above

32. Special Handling Instructions and Additional Information

USE APPROPRIATE PERSONAL PROTECTIVE EQUIPMENT

33. Transporter ____ Acknowledgement of Receipt of Materials

Printed/Typed Name: ED. Guerrero

Signature: Ed Guerrero

Date: Month 03 Day 28 Year 90

34. Transporter ____ Acknowledgement of Receipt of Materials

Printed/Typed Name:

Signature:

Date: Month Day Year

35. Discrepancy Indication Space

GENERATOR

TRANSPORTER

FACILITY

DTIC 326 (3-84)

State of California—Health and Welfare Agency
Form Approved OMB No. 2050—0039 (Expires 9-30-91)
Please print or type. (Form designed for use on elite (12-pitch typewriter).

Department of Health Services
Toxic Substances Control Division
Sacramento, California

UNIFORM HAZARDOUS WASTE MANIFEST

1. Generator's US EPA ID No.: CAD008325334 — Manifest Document No.: 90007
2. Page 1 of 1 — Information in the shaded areas is not required by Federal law.

3. Generator's Name and Mailing Address
ALLIED SIGNAL AEROSPACE - ELECTRODYNAMICS DIVISION
11600 SHERMAN WAY, N. HOLLYWOOD, CA 91605
4. Generator's Phone (818) 765-1010

A. State Manifest Document Number: 88457025
B. State Generator's ID: HAH036032067

5. Transporter 1 Company Name: DISPOSAL CONTROL SERVICE
6. US EPA ID Number: CAT030034184
C. State Transporter's ID: 007319
D. Transporter's Phone: (800) 824-3345

7. Transporter 2 Company Name:
8. US EPA ID Number:
E. State Transporter's ID:
F. Transporter's Phone:

9. Designated Facility Name and Site Address
OIL AND SOLVENT PROCESS CO
1704 W. FIRST ST.
AZUSA, CA 91702
10. US EPA ID Number: CAD008302903
G. State Facility's ID: CAD008302903
H. Facility's Phone: (818) 334-5117

11. US DOT Description (Including Proper Shipping Name, Hazard Class, and ID Number)	12. Containers No.	Type	13. Total Quantity	14. Unit Wt/Vol	I. Waste No.
a. WASTE FLAMMABLE LIQUID, n.o.s., FLAMMABLE LIQUID UN1993 (Hexane and water) (D001)	001	DM	00020	G	State 343; EPA/Other D001
b. HAZARDOUS WASTE LIQUID,n.o.s., ORM-E,NA9189 (polyurethane resin,dirt & water)	009	DM	00060	G	State 272; EPA/Other N/A
c.					State; EPA/Other
d.					State; EPA/Other

J. Additional Descriptions for Materials Listed Above
Profile a.-LAXK09378 - Hexane & water
b.-LAXK09377 - Polyurethane resin contaminated with dirt and water
OVERPACKED IN 85 GALLON DRUMS

K. Handling Codes for Wastes Listed Above
a. 01 b. 01
c. d.

15. Special Handling Instructions and Additional Information
WEAR APPROPRIATE PERSONAL PROTECTIVE EQUIPMENT

16.
GENERATOR'S CERTIFICATION: I hereby declare that the contents of this consignment are fully and accurately described above by proper shipping name and are classified, packed, marked, and labeled, and are in all respects in proper condition for transport by highway according to applicable international and national government regulations.

If I am a large quantity generator, I certify that I have a program in place to reduce the volume and toxicity of waste generated to the degree I have determined to be economically practicable and that I have selected the practicable method of treatment, storage, or disposal currently available to me which minimizes the present and future threat to human health and the environment; OR, if I am a small quantity generator, I have made a good faith effort to minimize my waste generation and select the best waste management method that is available to me and that I can afford.

Printed/Typed Name: M. McLaughlin — Signature: M. McLaughlin — Month Day Year: 03 21 90

17. Transporter 1 Acknowledgement of Receipt of Materials
Printed/Typed Name: Jimmy Lizardo — Signature: Jimmy Lizardo — Month Day Year: 03 21 90

18. Transporter 2 Acknowledgement of Receipt of Materials
Printed/Typed Name: — Signature: — Month Day Year:

19. Discrepancy Indication Space

20. Facility Owner or Operator Certification of receipt of hazardous materials covered by this manifest except as noted in Item 19.
Printed/Typed Name: Robert White — Signature: Robert White — Month Day Year: 03 21 90

GENERATOR — TRANSPORTER — FACILITY

IN CASE OF AN EMERGENCY OR SPILL, CALL THE NATIONAL RESPONSE CENTER 1-800-424-8802; WITHIN CALIFORNIA CALL 1-800-852-7550

DHS 8022 A (1/88)
EPA 8700—22
(Rev. 9-88) Previous editions are obsolete.

Do Not Write Below This Line

White: TSDF SENDS THIS COPY TO DOHS WITHIN ...
To: P.O. Box 3000, Sacramento, CA 95812

State of California—Health and Welfare Agency
Form Approved OMB No. 2050—0039 (Expires 9-30-91)
Please print or type. *(Form designed for use on elite [illegible]itch typewriter).*

Department of Health Services
Toxic Substances Control Division
Sacramento, California

UNIFORM HAZARDOUS WASTE MANIFEST

1. Generator's US EPA ID No.: CAD008325334
Manifest Document No.: 90006
2. Page 1 of 1
Information in the shaded areas is not required by Federal law.

3. Generator's Name and Mailing Address
ALLIED SIGNAL AEROSPACE- ELECTRODYNAMICS DIVISION
11600 SHERMAN WAY, N. HOLLYWOOD, CA 91605

4. Generator's Phone (818) 765-1010 D30444 MAR 27 90

A. State Manifest Document Number: 88457024
B. State Generator's ID: HAH036032067

5. Transporter 1 Company Name: DISPOSAL CONTROL SERVICE
6. US EPA ID Number: CAT030034184
C. State Transporter's ID: 007319
D. Transporter's Phone: (800) 824-3346

7. Transporter 2 Company Name:
8. US EPA ID Number:
E. State Transporter's ID:
F. Transporter's Phone:

9. Designated Facility Name and Site Address
ROMIC CHEMICAL CORPORATION
2081 BAY ROAD
EAST PALO ALTO, CA 94303
10. US EPA ID Number: CAD009452657
G. State Facility's ID: CAD009452657
H. Facility's Phone: (415) 324-1638

11. US DOT Description (Including Proper Shipping Name, Hazard Class, and ID Number)	12. Containers No.	Type	13. Total Quantity	14. Unit Wt/Vol	I. Waste No.
a. RQ,HAZARDOUS WASTE LIQUID,n.o.s.,ORM-E,NA9189 (D001,D007) (Waste chem film - alodine)	003	DF	00150	G	State / EPA/Other 135 / D001,D007
b.					State / EPA/Other
c.					State / EPA/Other
d.					State / EPA/Other

J. Additional Descriptions for Materials Listed Above
PROFILE 004665 (WASTE CHEM FILM ALODINE)

K. Handling Codes for Wastes Listed Above
a. 01
b.
c.
d.

15. Special Handling Instructions and Additional Information
USE APPROPRIATE PERSONAL PROTECTIVE EQUIPMENT

16.
GENERATOR'S CERTIFICATION: I hereby declare that the contents of this consignment are fully and accurately described above by proper shipping name and are classified, packed, marked, and labeled, and are in all respects in proper condition for transport by highway according to applicable international and national government regulations.

If I am a large quantity generator, I certify that I have a program in place to reduce the volume and toxicity of waste generated to the degree I have determined to be economically practicable and that I have selected the practicable method of treatment, storage, or disposal currently available to me which minimizes the present and future threat to human health and the environment; OR, if I am a small quantity generator, I have made a good faith effort to minimize my waste generation and select the best waste management method that is available to me and that I can afford.

Printed/Typed Name: M. McLaughlin
Signature: [signature]
Month Day Year: 03 07 90

17. Transporter 1 Acknowledgement of Receipt of Materials
Printed/Typed Name: Antonio Chavez II
Signature: [signature]
Month Day Year: 03 07 90

18. Transporter 2 Acknowledgement of Receipt of Materials
Printed/Typed Name:
Signature:
Month Day Year:

19. Discrepancy Indication Space

20. Facility Owner or Operator Certification of receipt of hazardous materials covered by this manifest except as noted in Item 19.
Printed/Typed Name: ANGELA GIULIANI
Signature: Angela Giuliani
Month Day Year: 03 08 90

GENERATOR / TRANSPORTER / FACILITY

IN CASE OF AN EMERGENCY OR SPILL, CALL THE NATIONAL RESPONSE CENTER 1-800-424-8802; WITHIN CALIFORNIA CALL 1-800-852-7550

88457024

DHS 8022 A (1/88)
EPA 8700—22
(Rev. 9-88) Previous editions are obsolete.

Do Not Write Below This Line

Yellow: TSDF SENDS THIS COPY TO GENERATOR WITHIN 30 DAYS

State of California—Health and Welfare Agency
Form Approved OMB No. 2050—0039 (Expires 9-30-91)
Please print or type. (Form designed for use on elite (12-pitch typewriter).

Department of Health Services
Toxic Substances Control Division
Sacramento, California

UNIFORM HAZARDOUS WASTE MANIFEST

1. Generator's US EPA ID No. CAD008325334 — Manifest Document No. 90005
2. Page 1 of 1

Information in the shaded areas is not required by Federal law.

3. Generator's Name and Mailing Address
ALLIED SIGNAL AEROSPACE-ELECTRODYNAMICS DIVISION
11600 SHERMAN WAY, N. HOLLYWOOD, CA 91605
4. Generator's Phone (818) 765-1010

A. State Manifest Document Number: 88457023
B. State Generator's ID: HAH036032067

5. Transporter 1 Company Name: DISPOSAL CONTROL SERVICE
6. US EPA ID Number: CAT030034184
C. State Transporter's ID: 0001 37
D. Transporter's Phone: (800) 824-3345

7. Transporter 2 Company Name
8. US EPA ID Number
E. State Transporter's ID
F. Transporter's Phone

9. Designated Facility Name and Site Address
USPCI, GRASSY MOUNTAIN FACILITY
3 MILES EAST, 7 MILES NORTH OF KNOLLS EXIT 180
GLIVE, UTAH
10. US EPA ID Number: UTD991301748
G. State Facility's ID: UT099130174 8
H. Facility's Phone: (801) 534-0054

11. US DOT Description (Including Proper Shipping Name, Hazard Class, and ID Number)	12. Containers No.	Type	13. Total Quantity	14. Unit Wt/Vol	I. Waste No.
a. CALIFORNIA REGULATED ONLY ~~HAZARDOUS WASTE SOLID,n.o.s., ORM-E,NA9189,(F001)~~ (EMPTY PLATING VAT & SCRUBBER HOOD) (3/2/90 TAM)	001	CM	02200	P	State / EPA/Other F001 (3/2/90 TAM)
b.					State / EPA/Other
c.					State / EPA/Other
d. Sw 2760					State / EPA/Other

J. Additional Descriptions for Materials Listed Above
GM89-2595

K. Handling Codes for Wastes Listed Above
a. 03 b. c. d.

15. Special Handling Instructions and Additional Information
USE APPROPRIATE PERSONAL PROTECTIVE EQUIPMENT

16.
GENERATOR'S CERTIFICATION: I hereby declare that the contents of this consignment are fully and accurately described above by proper shipping name and are classified, packed, marked, and labeled, and are in all respects in proper condition for transport by highway according to applicable international and national government regulations.

If I am a large quantity generator, I certify that I have a program in place to reduce the volume and toxicity of waste generated to the degree I have determined to be economically practicable and that I have selected the practicable method of treatment, storage, or disposal currently available to me which minimizes the present and future threat to human health and the environment; OR, if I am a small quantity generator, I have made a good faith effort to minimize my waste generation and select the best waste management method that is available to me and that I can afford.

Printed/Typed Name: M. McLAUGHLIN — Signature: M. T. McLaughlin — Month Day Year: 03 01 90

17. Transporter 1 Acknowledgement of Receipt of Materials
Printed/Typed Name: MARIO JURADO — Signature: Mario Jurado — Month Day Year: 03 01 90

18. Transporter 2 Acknowledgement of Receipt of Materials
Printed/Typed Name — Signature — Month Day Year

19. Discrepancy Indication Space
Changes per tc with Shelly Russell of Disposal Control 3/4/90 TAM
TC 1194

20. Facility Owner or Operator Certification of receipt of hazardous materials covered by this manifest except as noted in Item 19.
Printed/Typed Name: H C Romero — Signature — Month Day Year: 03 02 90

GENERATOR — TRANSPORTER — FACILITY

IN CASE OF AN EMERGENCY OR SPILL, CALL THE NATIONAL RESPONSE CENTER 1-800-424-8802; WITHIN CALIFORNIA CALL 1-800-852-7550

88457023

F001

DHS 8022 A (1/88)
EPA 8700—22
(Rev. 9-88) Previous editions are obsolete.

Do Not Write Below This Line

Yellow: TSDF SENDS THIS COPY TO GENERATOR WITHIN 30 DAYS

State of California—Health and Welfare Agency
Form Approved OMB No. 2050—0039 (Expires 9-30-91)
Please print or type. (Form designed for use on elite or pitch typewriter).

2023325
X03716
WT#25501

Department of Health Services
Toxic Substances Control Division
Sacramento, California

UNIFORM HAZARDOUS WASTE MANIFEST

1. Generator's US EPA ID No.: CAD008325334
Manifest Document No.: 90004
2. Page 1 of 1
Information in the shaded areas is not required by Federal law.

3. Generator's Name and Mailing Address
ALLIED SIGNAL AEROSPACE-ELECTRODYNAMICS DIVISION
11600 SHERMAN WAY, N. HOLLYWOOD, CA 91605

4. Generator's Phone (818) 765-1010

A. State Manifest Document Number: 88457022
B. State Generator's ID: HAN036032067

5. Transporter 1 Company Name: DISPOSAL CONTROL SERVICE
6. US EPA ID Number: CAT030034184
C. State Transporter's ID: 007311
D. Transporter's Phone: (800) 824-3345

7. Transporter 2 Company Name:
8. US EPA ID Number:
E. State Transporter's ID:
F. Transporter's Phone:

9. Designated Facility Name and Site Address
DEMENNO KERDOON
2100 N. ALAMEDA ST.
COMPTON, CA 90222
10. US EPA ID Number: CAT080013352
G. State Facility's ID: CAT080013352
H. Facility's Phone: (213) 537-7100

11. US DOT Description (Including Proper Shipping Name, Hazard Class, and ID Number)	12. Containers No.	Type	13. Total Quantity	14. Unit Wt/Vol	I. Waste No.
a. WASTE PETROLEUM OIL, n.o.s., COMBUSTIBLE LIQUID UN 1270 DOT-E 7476	001	TT	02000	G	State 221 EPA/Other N/A
b.					State EPA/Other
c.					State EPA/Other
d.					State EPA/Other

J. Additional Descriptions for Materials Listed Above
WATER SOLUBLE OIL 2%
LUBRICATING OIL 20%
HYDRAULIC OIL 60%
WATER 20%

K. Handling Codes for Wastes Listed Above
a. 01
b.
c.
d.

15. Special Handling Instructions and Additional Information
USE APPROPRIATE PERSONAL PROTECTIVE EQUIPMENT

16.
GENERATOR'S CERTIFICATION: I hereby declare that the contents of this consignment are fully and accurately described above by proper shipping name and are classified, packed, marked, and labeled, and are in all respects in proper condition for transport by highway according to applicable international and national government regulations.

If I am a large quantity generator, I certify that I have a program in place to reduce the volume and toxicity of waste generated to the degree I have determined to be economically practicable and that I have selected the practicable method of treatment, storage, or disposal currently available to me which minimizes the present and future threat to human health and the environment; OR, if I am a small quantity generator, I have made a good faith effort to minimize my waste generation and select the best waste management method that is available to me and that I can afford.

Printed/Typed Name: M. McLAUGHLIN
Signature: [signature]
Month Day Year: 03 01 90

17. Transporter 1 Acknowledgement of Receipt of Materials
Printed/Typed Name: LAWRENCE D. KELLIG
Signature: [signature]
Month Day Year: 03 01 90

18. Transporter 2 Acknowledgement of Receipt of Materials
Printed/Typed Name:
Signature:
Month Day Year:

19. Discrepancy Indication Space

20. Facility Owner or Operator Certification of receipt of hazardous materials covered by this manifest except as noted in Item 19.
Printed/Typed Name: ARTURO P. PEREZ
Signature: [signature]
Month Day Year: 03 01 90

GENERATOR
TRANSPORTER
FACILITY

88457022

IN CASE OF AN EMERGENCY OR SPILL, CALL THE NATIONAL RESPONSE CENTER 1-800-424-8802; WITHIN CALIFORNIA CALL 1-800-852-7550

DHS 8022 A (1/88)
EPA 8700—22
(Rev. 9-88) Previous editions are obsolete.

Do Not Write Below This Line

Yellow: TSDF SENDS THIS COPY TO GENERATOR WITHIN 30 DAYS

D112583

State of California—Health and Welfare Agency
Form Approved OMB No. 2050—0039 (Expires 9-30-9[illegible])
Please print or type. (Form designed for use on elite [illegible]pitch typewriter).

Department of Health Services
Toxic Substances Control Division
Sacramento, California

UNIFORM HAZARDOUS WASTE MANIFEST

1. Generator's US EPA ID No. CAD008325349 — Manifest Document No.
2. Page 1 of 1
Information in the shaded areas is not required by Federal law.

3. Generator's Name and Mailing Address
ALLIED SIGNAL AEROSPACE-ELECTRODYNAMICS DIVISION
11600 SHERMAN WAY, N. HOLLYWOOD, CA 91605
4. Generator's Phone (818) 765-1010

A. State Manifest Document Number: 88457021
B. State Generator's ID: HA 0 1 8 0 3 3 0 6 7
C. State Transporter's ID: 88 7 [illegible]
D. Transporter's Phone: (800) 624-3345

5. Transporter 1 Company Name: DISPOSAL CONTROL SERVICE
6. US EPA ID Number: CAT080034184
7. Transporter 2 Company Name:
8. US EPA ID Number:
E. State Transporter's ID:
F. Transporter's Phone:

9. Designated Facility Name and Site Address
CHEMICAL WASTE MANAGEMENT
35251 OLD SKYLINE ROAD
KETTLEMAN CITY, CA 93239
10. US EPA ID Number: CAT000646117
G. State Facility's ID: CAT000646117
H. Facility's Phone: (209) 386-9711

11. US DOT Description (Including Proper Shipping Name, Hazard Class, and ID Number)	12. Containers No.	Type	13. Total Quantity	14. Unit Wt/Vol	I. Waste No.
a. HAZARDOUS WASTE SOLID,n.o.s., ORM-E,NA9189, (D006,D007,D008) (ALUMINUM OXIDE DUST)	004	DF	01214010	P	State 181; EPA/Other D006,D007,D008
b. CRUSHED DRUMS _ CALIFORNIA REGULATED WASTE ONLY	016	DM	010300	P	State 612; EPA/Other NR
c.					State; EPA/Other
d.					State; EPA/Other

J. Additional Descriptions for Materials Listed Above
4. PROFILE LAXK09683 / ALUMINUM OXIDE DUST
LAX#65191 / CRUSHED DRUMS

K. Handling Codes for Wastes Listed Above
a. b. c. d.

15. Special Handling Instructions and Additional Information
WEAR APPROPRIATE PERSOANL PROTECTIVE EQUIPMENT

16.
GENERATOR'S CERTIFICATION: I hereby declare that the contents of this consignment are fully and accurately described above by proper shipping name and are classified, packed, marked, and labeled, and are in all respects in proper condition for transport by highway according to applicable international and national government regulations.

If I am a large quantity generator, I certify that I have a program in place to reduce the volume and toxicity of waste generated to the degree I have determined to be economically practicable and that I have selected the practicable method of treatment, storage, or disposal currently available to me which minimizes the present and future threat to human health and the environment; OR, if I am a small quantity generator, I have made a good faith effort to minimize my waste generation and select the best waste management method that is available to me and that I can afford.

Printed/Typed Name: MARY McLAUGHLIN — Signature: Mary McLaughlin — Month Day Year: 02 23 90

17. Transporter 1 Acknowledgement of Receipt of Materials
Printed/Typed Name: Jimmy Lizardo — Signature: Jimmy Lizardo — Month Day Year: 02 23 90

18. Transporter 2 Acknowledgement of Receipt of Materials
Printed/Typed Name: — Signature: — Month Day Year:

19. Discrepancy Indication Space

20. Facility Owner or Operator Certification of receipt of hazardous materials covered by this manifest except as noted in Item 19.
Printed/Typed Name: Ricardo S. Abelleira — Signature: R S Abelleira — Month Day Year: 03 06 90

GENERATOR — TRANSPORTER — FACILITY

IN CASE OF AN EMERGENCY OR SPILL, CALL THE NATIONAL RESPONSE CENTER 1-800-424-8802; WITHIN CALIFORNIA CALL 1-800-852-7550

88457021

Do Not Write Below This Line

DHS 8022 A (1/88)
EPA 8700-22
(Rev. 9-88) Previous editions are obsolete.

Yellow: TSDF SENDS THIS COPY TO GENERATOR WITHIN 30 DAYS

State of California—Health and Welfare Agency
Form Approved OMB No. 2050—0039 (Expires 9-30-91)
Please print or type. (Form designed for use on eli[illegible]-pitch typewriter).

9002090050

Department of Health Services
Toxic Substances Control Division
Sacramento, California

88457020

IN CASE OF AN EMERGENCY OR SPILL, CALL THE NATIONAL RESPONSE CENTER 1-800-424-8802; WITHIN CALIFORNIA CALL 1-800-852-7550

UNIFORM HAZARDOUS WASTE MANIFEST

1. Generator's US EPA ID No.: CAD008325334
Manifest Document No.: 90002
2. Page 1 of 1
Information in the shaded areas is not required by Federal law.

3. Generator's Name and Mailing Address
ALLIED SIGNAL AEROSPACE -ELECTRODYNAMICS DIVISION
11600 SHERMAN WAY, N. HOLLYWOOD, CA 91605

4. Generator's Phone (818) 765-1010

A. State Manifest Document Number: 88457020
B. State Generator's ID: HAH036032067

5. Transporter 1 Company Name: DISPOSAL CONTROL SERVICE
6. US EPA ID Number: CAT030034184
C. State Transporter's ID: 007375
D. Transporter's Phone: (800) 824-3345

7. Transporter 2 Company Name:
8. US EPA ID Number:
E. State Transporter's ID:
F. Transporter's Phone:

9. Designated Facility Name and Site Address
U S ECOLOGY
12 MILES SOUTH OF BEATTY
BEATTY, NEVADA 89002

10. US EPA ID Number: NVT330010000
G. State Facility's ID: nzt330010000
H. Facility's Phone: (702) 553-2203

11. US DOT Description (Including Proper Shipping Name, Hazard Class, and ID Number)	12. Containers No.	Type	13. Total Quantity	14. Unit Wt/Vol	I. Waste No.
a. WASTE CORROSIVE SOLID,n.o.s.,CORROSIVE MATERIAL (D002) UN1759(~~virgin sodium hydroxide contaminated with rain water~~)	001	DM	001/50	P	State 141 / EPA/Other D002
b.					State / EPA/Other
c.					State / EPA/Other
d.					State / EPA/Other

J. Additional Descriptions for Materials Listed Above
11A) Sodium Hydroxide contaminated with rain water.
overpacked in 85 G steel drum
SEE ATTACHED Profile Sheet
WS#-07-005-F41

K. Handling Codes for Wastes Listed Above
a. b. c. d.

15. Special Handling Instructions and Additional Information
(1X85gal)
USE APPROPRIATE PERSONAL PROTECTIVE EQUIPMENT

16.
GENERATOR'S CERTIFICATION: I hereby declare that the contents of this consignment are fully and accurately described above by proper shipping name and are classified, packed, marked, and labeled, and are in all respects in proper condition for transport by highway according to applicable international and national government regulations.

If I am a large quantity generator, I certify that I have a program in place to reduce the volume and toxicity of waste generated to the degree I have determined to be economically practicable and that I have selected the practicable method of treatment, storage, or disposal currently available to me which minimizes the present and future threat to human health and the environment; OR, if I am a small quantity generator, I have made a good faith effort to minimize my waste generation and select the best waste management method that is available to me and that I can afford.

Printed/Typed Name: M. McLaughlin
Signature: M. McLaughlin
Month Day Year: 02 08 90

17. Transporter 1 Acknowledgement of Receipt of Materials
Printed/Typed Name: Michael B Van Alstine
Signature: Michael B. Van Alstine
Month Day Year: 02 08 90

18. Transporter 2 Acknowledgement of Receipt of Materials
Printed/Typed Name:
Signature:
Month Day Year:

19. Discrepancy Indication Space
Designated Facility EPA ID # corrected. 2-9-90.

20. Facility Owner or Operator Certification of receipt of hazardous materials covered by this manifest except as noted in Item 19.
Printed/Typed Name: Michael E. Stucker
Signature: [signature]
Month Day Year: 02 09 90

GENERATOR / TRANSPORTER / FACILITY

DHS 8022 A (1/88)
EPA 8700—22
(Rev. 9-88) Previous editions are obsolete.

Do Not Write Below This Line

Yellow: TSDF SENDS THIS COPY TO GENERATOR WITHIN 30 DAYS

State of California—Health and Welfare Agency
Form Approved OMB No. 2050—0039 (Expires 9-30-91)
Please print or type. (Form designed for use on elite or pitch typewriter).

Department of Health Services
Toxic Substances Control Division
Sacramento, California

UNIFORM HAZARDOUS WASTE MANIFEST

1. Generator's US EPA ID No.: CAD0083 25334 — Manifest Document No.: 90001

2. Page 1 of 1

Information in the shaded areas is not required by Federal law.

3. Generator's Name and Mailing Address
ALLIED SIGNAL AEROSPACE-ELECTRODYNAMICS DIVISION
11600 SHERMAN WAY, N. HOLLYWOOD, CA 91605

4. Generator's Phone (818 765-1010

A. State Manifest Document Number: 88457019

B. State Generator's ID: HAH036032067

5. Transporter 1 Company Name: DISPOSAL CONTROL SERVICE

6. US EPA ID Number: CAT030034184

C. State Transporter's ID:

D. Transporter's Phone: 800*824-3345

7. Transporter 2 Company Name:

8. US EPA ID Number:

E. State Transporter's ID: 007317

F. Transporter's Phone:

9. Designated Facility Name and Site Address
DEMENNO KERDOON
2100 N. ALAMEDA ST.
COMPTON, CA 90222

10. US EPA ID Number: CAT080013352

G. State Facility's ID: cat080013352

H. Facility's Phone: (213) 537-7100

11. US DOT Description (Including Proper Shipping Name, Hazard Class, and ID Number)	12. Containers No.	Type	13. Total Quantity	14. Unit Wt/Vol	I. Waste No.
a. HAZARDOUS WASTE LIQUID, n.o.s., ORM-E, NA 9189 (waste coolant)	001	TT	02800	G	State 221 / EPA/Other N/A
b.					State / EPA/Other
c.					State / EPA/Other
d.					State / EPA/Other

J. Additional Descriptions for Materials Listed Above
WATER SOLUBLE OILS
LUBRICATING OILS
WATER

K. Handling Codes for Wastes Listed Above
a. 01 b. c. d.

15. Special Handling Instructions and Additional Information
USE APPROPRIATE PERSONAL PROTECTIVE EQUIPMENT

16.
GENERATOR'S CERTIFICATION: I hereby declare that the contents of this consignment are fully and accurately described above by proper shipping name and are classified, packed, marked, and labeled, and are in all respects in proper condition for transport by highway according to applicable international and national government regulations.

If I am a large quantity generator, I certify that I have a program in place to reduce the volume and toxicity of waste generated to the degree I have determined to be economically practicable and that I have selected the practicable method of treatment, storage, or disposal currently available to me which minimizes the present and future threat to human health and the environment; OR, if I am a small quantity generator, I have made a good faith effort to minimize my waste generation and select the best waste management method that is available to me and that I can afford.

Printed/Typed Name: N. McLaughlin — Signature: [signature] — Month Day Year: 01 19 90

17. Transporter 1 Acknowledgement of Receipt of Materials
Printed/Typed Name: [illegible] — Signature: [signature] — Month Day Year: 01 17 90

18. Transporter 2 Acknowledgement of Receipt of Materials
Printed/Typed Name: — Signature: — Month Day Year:

19. Discrepancy Indication Space

20. Facility Owner or Operator Certification of receipt of hazardous materials covered by this manifest except as noted in Item 19.
Printed/Typed Name: ARTURO B. PEREZ — Signature: [signature] — Month Day Year: 01 19 90

GENERATOR — TRANSPORTER — FACILITY

88457019

IN CASE OF AN EMERGENCY OR SPILL, CALL THE NATIONAL RESPONSE CENTER 1-800-424-8802; WITHIN CALIFORNIA CALL 1-800-852-7550

DHS 022 A (1/88)
EPA 700—22
(Rev. 9-88) Previous editions are obsolete.

Do Not Write Below This Line

Yellow: TSDF SENDS THIS COPY TO GENERATOR WITHIN 30 DAYS

OLW 2293

California—Health and Welfare Agency
Approved OMB No. 2050—0039 (Expires 9-30-91)
print or type. (Form designed for use on elite (pitch typewriter).

1989

11

Department of Health Services
Toxic Substances Control Division
Sacramento, California

UNIFORM HAZARDOUS WASTE MANIFEST

1. Generator's US EPA ID No.: CAD008325334 — Manifest Document No.: 89031

2. Page 1 of 2 — Information in the shaded areas is not required by Federal law.

3. Generator's Name and Mailing Address
ALLIED SIGNAL AEROSPACE-ELECTRODYNAMICS DIVISION
11600 SHERMAN WAY, N. HOLLYWOOD, CA 91605

4. Generator's Phone (818) 765-1010

A. State Manifest Document Number: 88457018

B. State Generator's ID: HAH036032067

C. State Transporter's ID: 012128

D. Transporter's Phone: (818) 334-5117

E. State Transporter's ID:

F. Transporter's Phone:

G. State Facility's ID: CAD008302903

H. Facility's Phone: (818) 334-5117

5. Transporter 1 Company Name: OIL & SOLVENT PROCESS CO

6. US EPA ID Number: CAD008302903

7. Transporter 2 Company Name:

8. US EPA ID Number:

9. Designated Facility Name and Site Address
OIL & SOLVENT PROCESS CO
1704 W. FIRST ST
AZUSA, CA 91702

10. US EPA ID Number: CAD008302903

11. US DOT Description (Including Proper Shipping Name, Hazard Class, and ID Number)	12. Containers No.	Type	13. Total Quantity	14. Unit Wt/Vol	Waste No.
a. RQ,WASTE HEPTANE, FLAMMABLE LIQUID,UN1206(D001)	002	DM	00100	G	State 213 EPA/Other D001
b. RQ,WASTE FLAMMABLE LIQUID,n.o.s.,FLAMMABLE LIQUID, UN1993(D001) (red oil and heptane)	001	DM	00050	G	State 214 EPA/Other D001
c. RQ WASTE FLAMMABLE LIQUID,n.o.s.,FLAMMABLE LIQUID, UN1993(F003,F005) (paint and thinners)	001	DM	00050	G	State 212 EPA/Other F003,F005
d. WASTE KEROSENE, COMBUSTIBLE LIQUID, UN1223	002	DM	00100	G	EPA/Other 221

J. Additional Descriptions for Materials Listed Above
Profile a.LAXF28557 -heptane
b.LAXF28556 -red oil & heptane
c.LAXF27942 -paitn & thinners
d.LAXF28609 -kerosene

K. Handling Codes for Wastes Listed Above
a. 01 b. 01
c. 01 d. 01

15. Special Handling Instructions and Additional Information

USE APPROPRIATE PERSONAL PROTECTIVE EQUIPMENT

16.

GENERATOR'S CERTIFICATION: I hereby declare that the contents of this consignment are fully and accurately described above by proper shipping name and are classified, packed, marked, and labeled, and are in all respects in proper condition for transport by highway according to applicable international and national government regulations.

If I am a large quantity generator, I certify that I have a program in place to reduce the volume and toxicity of waste generated to the degree I have determined to be economically practicable and that I have selected the practicable method of treatment, storage, or disposal currently available to me which minimizes the present and future threat to human health and the environment; OR, if I am a small quantity generator, I have made a good faith effort to minimize my waste generation and select the best waste management method that is available to me and that I can afford.

Printed/Typed Name: M. McLaughlin — Signature: [signature] — Month Day Year: 120789

17. Transporter 1 Acknowledgement of Receipt of Materials
Printed/Typed Name: ED Guerrero — Signature: Ed Guerrero — Month Day Year: 120789

18. Transporter 2 Acknowledgement of Receipt of Materials
Printed/Typed Name: — Signature: — Month Day Year:

19. Discrepancy Indication Space

20. Facility Owner or Operator Certification of receipt of hazardous materials covered by this manifest except as noted in Item 19.
Printed/Typed Name: Polly Teague — Signature: [signature] — Month Day Year: 120789

GENERATOR — TRANSPORTER — FACILITY

IN CASE OF AN EMERGENCY OR SPILL, CALL THE NATIONAL RESPONSE CENTER 1-800-424-8802; WITHIN CALIFORNIA CALL 1-800-852-7...

88457018

DHS 8022 A (1/88)
EPA 8700—22
(Rev. 9-88) Previous editions are obsolete.

Do Not Write Below This Line

Yellow: TSDF SENDS THIS COPY TO GENERATOR WITHIN 30 DAYS

041004

State of California—Health and Welfare Agency
Form Approved OMB No. 2050—0039 (Expires 9-30-[illegible])
Please print or type. (Form designed for use on eli[illegible]-pitch typewriter).

Department of H[illegible]
Toxic Substances C[illegible]
Sacrame[illegible]

UNIFORM HAZARDOUS WASTE MANIFEST

1. Generator's US EPA ID No. CAD008325334 | Manifest Document No. 8903 | 2. Page 1 of 1 | Information in the shaded area is not required by Federal law.

3. Generator's Name and Mailing Address
ALLIED SIGNAL AEROSPACE-ELECTRODYNAMICS DIVISION
11600 SHERMAN WAY, N. HOLLYWOOD, CA 91605
4. Generator's Phone (818 765-1010

A. State Manifest Document Number: 88457017
B. State Generator's ID: HAHQ360326 67

5. Transporter 1 Company Name: BROCO, INC.
6. US EPA ID Number: CAT080022148
C. State Transporter's ID: 20 [illegible]
D. Transporter's Phone: (714-350-4701)

7. Transporter 2 Company Name
8. US EPA ID Number
E. State Transporter's ID
F. Transporter's Phone

9. Designated Facility Name and Site Address
BROCO, INC.
2610 N. ALDER
RIALTO, CA 92376
10. US EPA ID Number: CAT080022148
G. State Facility's ID: CAT080022148
H. Facility's Phone: (714) 350-4701

11. US DOT Description (Including Proper Shipping Name, Hazard Class, and ID Number)	12. Containers No.	Type	13. Total Quantity	14. Unit Wt/Vol	Waste No.
a. WASTE TETRAHYDROFURAN, FLAMMABLE LIQUID, UN 2056, D001 (Possible explosive)	001	CM	.25	G	State 331 / EPA/Other D001
b.					State / EPA/Other
c.					State / EPA/Other
d.					State / EPA/Other

J. Additional Descriptions for Materials Listed Above
RECD - PURCH - BENDIX 89 DEC -7 AM 10:17

K. Handling Codes for Wastes Listed Above
a. 95 b. c. d.

15. Special Handling Instructions and Additional Information
Explosive, shock reaction, flammable. Keepaway from open flame. Handle as explosive. Use proper personal and explosive protective equipment.

16. GENERATOR'S CERTIFICATION: I hereby declare that the contents of this consignment are fully and accurately described above by proper shipping name and are classified, packed, marked, and labeled, and are in all respects in proper condition for transport by highway according to applicable international and national government regulations.

If I am a large quantity generator, I certify that I have a program in place to reduce the volume and toxicity of waste generated to the degree I have determined to be economically practicable and that I have selected the practicable method of treatment, storage, or disposal currently available to me which minimizes the present and future threat to human health and the environment; OR, if I am a small quantity generator, I have made a good faith effort to minimize my waste generation and select the best waste management method that is available to me and that I can afford.

Printed/Typed Name: David F Gaitens | Signature | Month Day Year: 11 6 89

17. Transporter 1 Acknowledgement of Receipt of Materials
Printed/Typed Name: TERRY CHUBB / BROCO INC | Signature | Month Day Year: 12 6 89

18. Transporter 2 Acknowledgement of Receipt of Materials
Printed/Typed Name | Signature | Month Day Year

19. Discrepancy Indication Space

20. Facility Owner or Operator Certification of receipt of hazardous materials covered by this manifest except as noted in Item 19.
Printed/Typed Name: Karen Sherwood / Broco Inc | Signature | Month Day Year: 12 6 89

GENERATOR
TRANSPORTER
FACILITY

IN CASE OF AN EMERGENCY OR SPILL, CALL THE NATIONAL RESPONSE CENTER 1-800-424-8802; WITHIN CALIFORNIA CALL 1-800-852-7550

88457017

DHS 8022 A (1/88)
EPA 8700—22
(Rev. 9-88) Previous editions are obsolete.

Do Not Write Below This Line

Yellow: TSDF SENDS THIS COPY TO GENERATOR WITHIN 30 DAYS

Approved OMB No. 2050—0039 (Expires 9-30-91)
Please print or type. (Form designed for use on elite (pitch typewriter).

Department of Health Services
Toxic Substances Control Division
Sacramento, California

88457016

IN CASE OF AN EMERGENCY OR SPILL, CALL THE NATIONAL RESPONSE CENTER 1-800-424-8802; WITHIN CALIFORNIA CALL 1-800-852-7550

UNIFORM HAZARDOUS WASTE MANIFEST

1. Generator's US EPA ID No.: CAD008325334 — Manifest Document No.: 89029
2. Page 1 of 1 — Information in the shaded areas is not required by Federal law.

3. Generator's Name and Mailing Address
ALLIED SIGNAL AEROSPACE-ELECTRODYNAMICS DIVISION
11600 SHERMAN WAY, N. HOLLYWOOD, CA 91605
4. Generator's Phone: 818 765-1010

A. State Manifest Document Number: 88457016
B. State Generator's ID: [illegible]
C. State Transporter's ID: [illegible]
D. Transporter's Phone: (800) 824-[illegible]
E. State Transporter's ID: [illegible]
F. Transporter's Phone:
G. State Facility's ID: CAT080013352
H. Facility's Phone: (213) 537-7100

5. Transporter 1 Company Name: DISPOSAL CONTROL SERVICE
6. US EPA ID Number: CAT030034184
7. Transporter 2 Company Name:
8. US EPA ID Number:

9. Designated Facility Name and Site Address
DEMENNO KERDOON
2100 N. ALAMEDA ST.
COMPTON, CA 90222
10. US EPA ID Number: CAT080013352

11. US DOT Description (Including Proper Shipping Name, Hazard Class, and ID Number)	12. Containers No.	Type	13. Total Quantity	14. Unit Wt/Vol	15. Waste No.
a. WASTE PETROLEUM OIL, N. O. S., COMBUSTIBLE LIQUID UN 1270	001	TT	02000	G	State / EPA/Other 221
b.					State N/A / EPA/Other
c.					State / EPA/Other
d.					State / EPA/Other

J. Additional Descriptions for Materials Listed Above
WATER SOLUBLE OIL 2%
LUBRICATING OIL 20%
HYDRAULIC OIL 60%
WATER 20%

K. Handling Codes for Wastes Listed Above
a. 01 b. c. d.

15. Special Handling Instructions and Additional Information
USE APPROPRIATE PERSOANL PROTECTIVE EQUIPMENT

16.
GENERATOR'S CERTIFICATION: I hereby declare that the contents of this consignment are fully and accurately described above by proper shipping name and are classified, packed, marked, and labeled, and are in all respects in proper condition for transport by highway according to applicable international and national government regulations.

If I am a large quantity generator, I certify that I have a program in place to reduce the volume and toxicity of waste generated to the degree I have determined to be economically practicable and that I have selected the practicable method of treatment, storage, or disposal currently available to me which minimizes the present and future threat to human health and the environment; OR, if I am a small quantity generator, I have made a good faith effort to minimize my waste generation and select the best waste management method that is available to me and that I can afford.

Printed/Typed Name	Signature	Month Day Year
M. McLaughlin	[signature]	11 27 89

17. Transporter 1 Acknowledgement of Receipt of Materials

Printed/Typed Name	Signature	Month Day Year
PHILLIP FARLEY	Phillip Farley	11 27 89

18. Transporter 2 Acknowledgement of Receipt of Materials

Printed/Typed Name	Signature	Month Day Year

19. Discrepancy Indication Space

20. Facility Owner or Operator Certification of receipt of hazardous materials covered by this manifest except as noted in Item 19.

Printed/Typed Name	Signature	Month Day Year
ARTURO B. PEREZ	[signature]	11 27 89

GENERATOR — TRANSPORTER — FACILITY

DHS 8022 A (1/88)
EPA 8700—22
(Rev. 9-88) Previous editions are obsolete.

Do Not Write Below This Line

Yellow: TSDF SENDS THIS COPY TO GENERATOR WITHIN 30 DAYS

O/W 1006

State of California—Health and Welfare Agency
Form Approved OMB No. 2050—0039 (Expires 9-30-91)
Please print or type. (Form designed for use on elite (1[illegible]h typewriter).

Department of Health Services
Toxic Substances Control Division
Sacramento, California

88457015

GENERATOR

UNIFORM HAZARDOUS WASTE MANIFEST

1. Generator's US EPA ID No.: CAD008325334
Manifest Document No.: 08928
2. Page 1 of 1
Information in the shaded areas is not required by Federal law.

3. Generator's Name and Mailing Address
ALLIED SIGNAL AEROSPACE-ELECTRODYNAMICS DIVISION
11600 SHERMAN WAY, N. HOLLYWOOD, CA 91605
4. Generator's Phone (818) 765-1010

A. State Manifest Document Number: 88457015
B. State Generator's ID: HAN036032067

5. Transporter 1 Company Name: DISPOSAL CONTROL SERVICE
6. US EPA ID Number: CAT080034184
C. State Transporter's ID: 007319
D. Transporter's Phone: (800) 824-3345

7. Transporter 2 Company Name:
8. US EPA ID Number:
E. State Transporter's ID:
F. Transporter's Phone:

9. Designated Facility Name and Site Address
ROMIC CHEMICAL CORPORATION
2081 BAY ROAD
EAST PALO ALTO, CA 94303
10. US EPA ID Number: CAD009452657
G. State Facility's ID: CAD009452657
H. Facility's Phone: (415) 324-1638

11. US DOT Description (Including Proper Shipping Name, Hazard Class, and ID Number)	12. Containers No.	Type	13. Total Quantity	14. Unit Wt/Vol	I. Waste No.
a. RQ,Waste Flammable Liquid, n.o.s.,Flammable Liquid, UN1993 (D001) (Varnish)	001	DM	00050	G	State 343 / EPA/Other D001
b. WASTE FLAMMABLE LIQUID,n.o.s.,Flammable Liquid, UN1993(D001) (Cosmoline)	003	DM	00150	G	State 213 / EPA/Other D001
c.					State / EPA/Other
d.					State / EPA/Other

J. Additional Descriptions for Materials Listed Above
a) Profile 000269 Varnish -virgin material
b) 008352 Cosmoline -virgin material

K. Handling Codes for Wastes Listed Above
a. 01
b. 01
c.
d.

15. Special Handling Instructions and Additional Information
Wear appropriate personal protective equipment (4X85gal DM overpaks)

16.
GENERATOR'S CERTIFICATION: I hereby declare that the contents of this consignment are fully and accurately described above by proper shipping name and are classified, packed, marked, and labeled, and are in all respects in proper condition for transport by highway according to applicable international and national government regulations.

If I am a large quantity generator, I certify that I have a program in place to reduce the volume and toxicity of waste generated to the degree I have determined to be economically practicable and that I have selected the practicable method of treatment, storage, or disposal currently available to me which minimizes the present and future threat to human health and the environment; OR, if I am a small quantity generator, I have made a good faith effort to minimize my waste generation and select the best waste management method that is available to me and that I can afford.

Printed/Typed Name: M. McLaughlin
Signature: M. McLaughlin
Month Day Year: 11 15 89

TRANSPORTER

17. Transporter 1 Acknowledgement of Receipt of Materials
Printed/Typed Name: Antonio Chavez III
Signature: [signature]
Month Day Year: 11 15 89

18. Transporter 2 Acknowledgement of Receipt of Materials
Printed/Typed Name:
Signature:
Month Day Year:

FACILITY

19. Discrepancy Indication Space

20. Facility Owner or Operator Certification of receipt of hazardous materials covered by this manifest except as noted in Item 19.
Printed/Typed Name: ANGELA GIULIANI
Signature: Angela Giuliani
Month Day Year: 11 16 89

8022 A (1/88)
3700—22
(9-88) Previous editions are obsolete.

Do Not Write Below This Line

Yellow: TSDF SENDS THIS COPY TO GENERATOR WITHIN 30 DAYS

...OR SPILL, CALL THE NATIONAL RESPONSE CENTER 1-800-424-8802; WITHIN CALIFORNIA CALL 1-800-852-7550

State of California—Health and Welfare Agency
Form Approved OMB No. 2050—0039 (Expires 9-30-91) WT21938
Please print or type. (Form designed for use on elite (12-pitch typewriter).

Department of Health Services
Toxic Substances Control Division
Sacramento, California

UNIFORM HAZARDOUS WASTE MANIFEST

Generator's US EPA ID No.: CA D0 0 8 3 2 5 3 3 4 8 9 0 2 7
Manifest Document No.
2. Page 1 of 1

Information in the shaded areas is not required by Federal law.

3. Generator's Name and Mailing Address
ALLIED SIGNAL AEROSPACE-ELECTRODYNAMICS DIVISION
11600 SHERMAN WAY, N. HOLLYWOOD, CA 91605

4. Generator's Phone (818) 765-1010

A. State Manifest Document Number: 88457014
B. State Generator's ID: HAN03 6 9 3 2 0 5 7
C. State Transporter's ID: 2335
D. Transporter's Phone: (800) 824-3346

5. Transporter 1 Company Name: DISPOSAL CONTROL SERVICE
6. US EPA ID Number: CAT030034184

7. Transporter 2 Company Name
8. US EPA ID Number

E. State Transporter's ID
F. Transporter's Phone

9. Designated Facility Name and Site Address
DEMENNO KERDOON
2100 N. Alameda ST.
Compton, CA 90222
10. US EPA ID Number: CAT080013352

G. State Facility's ID: CAT080013352
H. Facility's Phone: (213) 537-7100

11. US DOT Description (Including Proper Shipping Name, Hazard Class, and ID Number)	12. Containers No.	Type	13. Total Quantity	14. Unit Wt/Vol	I. Waste No.
a. HAZARDOUS WASTE LIQUID, n.o.s.,ORM-E,NA 9189 (waste coolant)	001	TT	015500	G	State 221 / EPA/Other N/A
b.					State / EPA/Other
c.					State / EPA/Other
d.					State / EPA/Other

J. Additional Descriptions for Materials Listed Above
water soluble oils
lubricating oils
water

K. Handling Codes for Wastes Listed Above
a. 01
b.
c.
d.

15. Special Handling Instructions and Additional Information
USE APPROPRIATE PERSONAL PROTECTIVE EQUIPMENT

16.
GENERATOR'S CERTIFICATION: I hereby declare that the contents of this consignment are fully and accurately described above by proper shipping name and are classified, packed, marked, and labeled, and are in all respects in proper condition for transport by highway according to applicable international and national government regulations.

If I am a large quantity generator, I certify that I have a program in place to reduce the volume and toxicity of waste generated to the degree I have determined to be economically practicable and that I have selected the practicable method of treatment, storage, or disposal currently available to me which minimizes the present and future threat to human health and the environment; OR, if I am a small quantity generator, I have made a good faith effort to minimize my waste generation and select the best waste management method that is available to me and that I can afford.

Printed/Typed Name: M. McLaughlin | Signature: M. McLaughlin | Month Day Year: 1 1 1 1 3 1 8 9

17. Transporter 1 Acknowledgement of Receipt of Materials
Printed/Typed Name: DAVE DADE | Signature: [signature] | Month Day Year: 1 1 1 1 3 1 8 9

18. Transporter 2 Acknowledgement of Receipt of Materials
Printed/Typed Name | Signature | Month Day Year

19. Discrepancy Indication Space

20. Facility Owner or Operator Certification of receipt of hazardous materials covered by this manifest except as noted in Item 19.
Printed/Typed Name: ARTURO B. PEREZ | Signature: [signature] | Month Day Year: 1 1 1 3 8 9

GENERATOR
TRANSPORTER
FACILITY

IN CASE OF AN EMERGENCY OR SPILL, CALL THE NATIONAL RESPONSE CENTER 1-800-424-8802; WITHIN CALIFORNIA CALL 1-800-852-7550

88457014

Do Not Write Below This Line

DHS 8022 A (1/88)
EPA 8700—22
(Rev. 9-88) Previous editions are obsolete.

Yellow: TSDF SENDS THIS COPY TO GENERATOR WITHIN 30 DAYS

01W667

Form Approved OMB No. 2050—0039 (Expires 9-30-91)
Please print or type. (Form designed for use on elite (1[illegible]h typewriter).

Department of Health Services
Toxic Substances Control Division
Sacramento, California

UNIFORM HAZARDOUS WASTE MANIFEST

1. Generator's US EPA ID No.: CAD008325334 — Manifest Document No.: 89026

2. Page 1 of 1

Information in the shaded areas is not required by Federal law.

3. Generator's Name and Mailing Address
ALLIED SIGNAL AEROSPACE-ELECTRODYNAMICS DIVISION
11600 SHERMAN WAY, N. HOLLYWOOD, CA 91605

4. Generator's Phone (818) 765-1010

A. State Manifest Document Number: 88457012

B. State Generator's ID: HAH036032067

5. Transporter 1 Company Name: DISPOSAL CONTROL SERVICE — 6. US EPA ID Number: CAT080034184

C. State Transporter's ID:

D. Transporter's Phone: *800*824-3345

7. Transporter 2 Company Name: — 8. US EPA ID Number:

E. State Transporter's ID: 007369

F. Transporter's Phone: 714-983-0342

9. Designated Facility Name and Site Address
CHEMICAL WASTE MANAGEMENT
35251 OLD SKYLINE ROAD
KETTLEMAN CITY, CA 93239

10. US EPA ID Number: CAT000646117

G. State Facility's ID: CAT000646117

H. Facility's Phone: (209) 386-9711

11. US DOT Description (Including Proper Shipping Name, Hazard Class, and ID Number)	12. Containers No.	Type	13. Total Quantity	14. Unit Wt/Vol	1. Waste No.
a. HAZARDOUS WASTE LIQUID, N.O.S., ORM-E, HA9189(F006) (NICKEL SULFAMATE)	003	DF	00015	G	State 726; EPA/Other F006
b.					State; EPA/Other
c.					State; EPA/Other
d.					State; EPA/Other

J. Additional Descriptions for Materials Listed Above
PROFILE LAX H56417 Nickel Sulfamate Neutralized

K. Handling Codes for Wastes Listed Above
a. b. c. d.

15. Special Handling Instructions and Additional Information
USE PROPER PERSONAL PROTECTIVE EQUIPMENT

16.
GENERATOR'S CERTIFICATION: I hereby declare that the contents of this consignment are fully and accurately described above by proper shipping name and are classified, packed, marked, and labeled, and are in all respects in proper condition for transport by highway according to applicable international and national government regulations.

If I am a large quantity generator, I certify that I have a program in place to reduce the volume and toxicity of waste generated to the degree I have determined to be economically practicable and that I have selected the practicable method of treatment, storage, or disposal currently available to me which minimizes the present and future threat to human health and the environment; OR, if I am a small quantity generator, I have made a good faith effort to minimize my waste generation and select the best waste management method that is available to me and that I can afford.

Printed/Typed Name: Mary McLaughlin — Signature: [signature] — Month Day Year: 10 23 89

17. Transporter 1 Acknowledgement of Receipt of Materials
Printed/Typed Name: Bill Somers — Signature: [signature] — Month Day Year: 10 23 89

18. Transporter 2 Acknowledgement of Receipt of Materials
Printed/Typed Name: — Signature: — Month Day Year:

19. Discrepancy Indication Space

20. Facility Owner or Operator Certification of receipt of hazardous materials covered by this manifest except as noted in Item 19.
Printed/Typed Name: Jesus Juarez — Signature: [signature] — Month Day Year: 10 26 89

Do Not Write Below This Line

GENERATOR — TRANSPORTER — FACILITY

IN CASE OF AN EMERGENCY OR SPILL, CALL THE NATIONAL RESPONSE CENTER 1-800-424-8802; WITHIN CALIFORNIA CALL 1-800-852-7550

88457012

DHS 8022 A (1/88)
EPA 8700—22
(Rev. 9-88) Previous editions are obsolete.

Yellow: TSDF SENDS THIS COPY TO GENERATOR WITHIN 30 DAYS

State of California—Health and Welfare Agency
Form Approved OMB No. 2050—0039 (Expires 9-30-91) 16716
Please print or type. (Form designed for use on elite (12-pitch typewriter).

Department of Health Services
Toxic Substances Control Division
Sacramento, California

UNIFORM HAZARDOUS WASTE MANIFEST

1. Generator's US EPA ID No. CAD008329348 | Manifest Document No.
2. Page 1 of 1

Information in the shaded areas is not required by Federal law.

3. Generator's Name and Mailing Address
ALLIED SIGNAL AEROSPACE-ELECTRODYNAMICS DIVISION
11600 SHERMAN WAY, N. HOLLYWOOD, CA 91606
4. Generator's Phone 818 765-1010

A. State Manifest Document Number 88457011
B. State Generator's ID HAH016032061

5. Transporter 1 Company Name DISPOSAL CONTROL SERVICE
6. US EPA ID Number CAT080034184
C. State Transporter's ID 907006
D. Transporter's Phone (800)824-3348

7. Transporter 2 Company Name
8. US EPA ID Number
E. State Transporter's ID
F. Transporter's Phone

9. Designated Facility Name and Site Address
DEMENNO KERDOON
2100 N. ALAMEDA ST.
COMPTON, CA 90222
10. US EPA ID Number CAT080013352
G. State Facility's ID CAT080013352
H. Facility's Phone (213) 637-7100

11. US DOT Description (Including Proper Shipping Name, Hazard Class, and ID Number)	12. Containers No.	Type	13. Total Quantity	14. Unit Wt/Vol	Waste No.
a. HAZARDOUS WASTE LIQUID, N.O.S., ORM-E NA9189 R.Q. (waste coolant)	001	T	031000	G	State 221 / EPA/Other N/A
b.					State / EPA/Other
c.					State / EPA/Other
d.					State / EPA/Other

J. Additional Descriptions for Materials Listed Above
water soluble oils Attached Profile
lubricating oils
water per profile

K. Handling Codes for Wastes Listed Above
a. 01 b.
c. d.

15. Special Handling Instructions and Additional Information
USE APPROPRIATE PERSONAL PROTECTIVE EQUIPMENT

16.
GENERATOR'S CERTIFICATION: I hereby declare that the contents of this consignment are fully and accurately described above by proper shipping name and are classified, packed, marked, and labeled, and are in all respects in proper condition for transport by highway according to applicable international and national government regulations.

If I am a large quantity generator, I certify that I have a program in place to reduce the volume and toxicity of waste generated to the degree I have determined to be economically practicable and that I have selected the practicable method of treatment, storage, or disposal currently available to me which minimizes the present and future threat to human health and the environment; OR, if I am a small quantity generator, I have made a good faith effort to minimize my waste generation and select the best waste management method that is available to me and that I can afford.

Printed/Typed Name: M. McLaughlin | Signature: M. McLaughlin | Month Day Year: 09 11 21 89

TRANSPORTER

17. Transporter 1 Acknowledgement of Receipt of Materials
Printed/Typed Name: TOM CASTANEDA | Signature | Month Day Year: 09 11 21 89

18. Transporter 2 Acknowledgement of Receipt of Materials
Printed/Typed Name | Signature | Month Day Year

FACILITY

19. Discrepancy Indication Space

20. Facility Owner or Operator Certification of receipt of hazardous materials covered by this manifest except as noted in Item 19.
Printed/Typed Name: ARTURO P. PEREZ | Signature | Month Day Year: 09 11 21 89

GENERATOR

IN CASE OF AN EMERGENCY OR SPILL, CALL THE NATIONAL RESPONSE CENTER 1-800-424-8802; WITHIN CALIFORNIA CALL 1-800-852-7550

88457011

DHS 8022 A (1/88)
EPA 8700—22
(Rev. 9-88) Previous editions are obsolete.

Do Not Write Below This Line

Yellow: TSDF SENDS THIS COPY TO GENERATOR WITHIN 30 DAYS

W/O 12479

State of California—Health and Welfare Agency
Form Approved OMB No. 2050—0039 (Expires 9-30-91)
Please print or type. (Form designed for use on elite (12-pitch typewriter).

Department of Health Services
Toxic Substances Control Division
Sacramento, California

UNIFORM HAZARDOUS WASTE MANIFEST

1. Generator's US EPA ID No. CAD008325344 | Manifest Document No. | 2. Page 1 of 1 | Information in the shaded areas is not required by Federal law.

3. Generator's Name and Mailing Address
ALLIED SIGNAL AEROSPACE-ELECTRODYNAMICS DIVISION
11600 SHERMAN WAY, N. HOLLYWOOD, CA 91605

4. Generator's Phone (818) 765-1010

A. State Manifest Document Number: 88457010
B. State Generator's ID: HAW034828267
C. State Transporter's ID: 8265
D. Transporter's Phone: (800) 624-3345
E. State Transporter's ID:
F. Transporter's Phone:
G. State Facility's ID: CAT000646117
H. Facility's Phone: (209) 396-9711

5. Transporter 1 Company Name: DISPOSAL CONTROL SERVICE
6. US EPA ID Number: CAT000034184
7. Transporter 2 Company Name:
8. US EPA ID Number:

9. Designated Facility Name and Site Address
CHEMICAL WASTE MANAGEMENT
35251 OLD SKYLINE ROAD
KETTLEMAN CITY, CA 93239
10. US EPA ID Number: CAT000646117

11. US DOT Description (Including Proper Shipping Name, Hazard Class, and ID Number)	12. Containers No.	Type	13. Total Quantity	14. Unit Wt/Vol	Waste No.
a. HAZARDOUS WASTE LIQUID,n.o.s.,ORM-E,NA9189(D006) (Waste Tin Fluoborate and water)	001	DF	00005	G	State / EPA/Other 722 D006
b. HAZARDOUS WASTE LIQUID,n.o.s.,ORM-E,NA9189(D006) (Waste sodium bichromate and water)	015	DF	00210	G	State / EPA/Other 723 D007
c. HAZARDOUS WASTE SOLID,n.o.s.,ORM-E,NA9189(D006,D007 (waste hydraulic still bottoms) D008)	003	DF	0.75	Y	State / EPA/Other 222 D006,007,008
d.					State / EPA/Other

J. Additional Descriptions for Materials Listed Above
Profile LAXJ74480 Tin Fluoborate & water
LAXJ74482 Sodium bichromate &water
LAXJ74477 hydraulic still bottoms

K. Handling Codes for Wastes Listed Above
a. b. c. d.

15. Special Handling Instructions and Additional Information
wear appropriate personal protective equipment
9 X 55 Gal DF
1 X 5 Gal DF

16. GENERATOR'S CERTIFICATION: I hereby declare that the contents of this consignment are fully and accurately described above by proper shipping name and are classified, packed, marked, and labeled, and are in all respects in proper condition for transport by highway according to applicable international and national government regulations.

If I am a large quantity generator, I certify that I have a program in place to reduce the volume and toxicity of waste generated to the degree I have determined to be economically practicable and that I have selected the practicable method of treatment, storage, or disposal currently available to me which minimizes the present and future threat to human health and the environment; OR, if I am a small quantity generator, I have made a good faith effort to minimize my waste generation and select the best waste management method that is available to me and that I can afford.

Printed/Typed Name: M. McLaughlin | Signature: M. McLaughlin | Month Day Year: 10 19 16 89

17. Transporter 1 Acknowledgement of Receipt of Materials
Printed/Typed Name: Jamy Lizardo | Signature: Jamy Lizardo | Month Day Year: 10 19 16 89

18. Transporter 2 Acknowledgement of Receipt of Materials
Printed/Typed Name | Signature | Month Day Year

19. Discrepancy Indication Space

20. Facility Owner or Operator Certification of receipt of hazardous materials covered by this manifest except as noted in Item 19.
Printed/Typed Name: Jesus Juarez | Signature: Jesus Juarez | Month Day Year: 10 20 89

Do Not Write Below This Line

DHS 8022 A (1/88)
EPA 8700—22
(Rev. 9-88) Previous editions are obsolete.

Yellow: TSDF SENDS THIS COPY TO GENERATOR WITHIN 30 DA

GENERATOR
TRANSPORTER
FACILITY

IN CASE OF AN EMERGENCY OR SPILL, CALL THE NATIONAL RESPONSE CENTER 1-800-424-8802; WITHIN CALIFORNIA CALL 1-800-852-7550

88457010

State of California - Health and Welfare Agency
Form Approved OMB No. 2050—0039 (Expires 9-30-6[illegible])
Please print or type. (Form designed for use on e[illegible] 2-pitch typewriter).

Toxic Substances Control Division
Sacramento, California

UNIFORM HAZARDOUS WASTE MANIFEST

1. Generator's US EPA ID No.: CAD008325334 — Manifest Document No.: 89023
2. Page 1 of 1 — Information in the shaded areas is not required by Federal law.

3. Generator's Name and Mailing Address
ALLIED SIGNAL AEROSPACE-ELECTRODYNAMICS DIVISION
11600 SHERMAN WAY, N. HOLLYWOOD, CA 91605

4. Generator's Phone (818) 765-1010

A. State Manifest Document Number: 88457051
B. State Generator's ID: HAH036032067
C. State Transporter's ID: 707090
D. Transporter's Phone: (800) 824-3345
E. State Transporter's ID:
F. Transporter's Phone:
G. State Facility's ID: CAT080013352
H. Facility's Phone: (213) 537-7100

5. Transporter 1 Company Name: DISPOSAL CONTROL SERVICE
6. US EPA ID Number: CAT030034184
7. Transporter 2 Company Name:
8. US EPA ID Number:

9. Designated Facility Name and Site Address
DEMENNO KERDOON
2100 N. ALAMEDA ST
COMPTON, CA 90222

10. US EPA ID Number: CAT080013352

11. US DOT Description (Including Proper Shipping Name, Hazard Class, and ID Number)	12. Containers No.	Type	13. Total Quantity	14. Unit Wt/Vol	I. Waste No.
a. WASTE PETROLEUM OIL, N.O.S., COMBUSTIBLE LIQUID UN 1270	001	TT	01500	G	State 221 / EPA/Other N/A
b.					State / EPA/Other
c.					State / EPA/Other
d.					State / EPA/Other

J. Additional Descriptions for Materials Listed Above
WATER SOLULBE OIL 2%
LUBRICATING OIL 20%
HYDRAULIC OIL 60%
WATER 20%

K. Handling Codes for Wastes Listed Above
a. 01
b.
c.
d.

15. Special Handling Instructions and Additional Information
USE APPROPRIATE PERSONAL PROTECTIVE EQUIPMENT

16.
GENERATOR'S CERTIFICATION: I hereby declare that the contents of this consignment are fully and accurately described above by proper shipping name and are classified, packed, marked, and labeled, and are in all respects in proper condition for transport by highway according to applicable international and national government regulations.

If I am a large quantity generator, I certify that I have a program in place to reduce the volume and toxicity of waste generated to the degree I have determined to be economically practicable and that I have selected the practicable method of treatment, storage, or disposal currently available to me which minimizes the present and future threat to human health and the environment; OR, if I am a small quantity generator, I have made a good faith effort to minimize my waste generation and select the best waste management method that is available to me and that I can afford.

Printed/Typed Name: MARY McLAUGHLIN — Signature: Mary McLaughlin — Month Day Year: 08 23 89

17. Transporter 1 Acknowledgement of Receipt of Materials
Printed/Typed Name: PHILLIP FARLEY — Signature: Phillip Farley — Month Day Year: 08 23 89

18. Transporter 2 Acknowledgement of Receipt of Materials
Printed/Typed Name: — Signature: — Month Day Year:

19. Discrepancy Indication Space

20. Facility Owner or Operator Certification of receipt of hazardous materials covered by this manifest except as noted in Item 19.
Printed/Typed Name: ARTURO B. PEREZ — Signature: Arturo B Perez — Month Day Year: 08 23 89

GENERATOR — TRANSPORTER — FACILITY

IN CASE OF AN EMERGENCY OR SPILL, CALL THE NATIONAL RESPONSE CENTER 1-800-424-8802; WITHIN CALIFORNIA CALL 1-800-852-7550

DHS 8022 A (1/88)
EPA 8700—22
(Rev. 9-88) Previous editions are obsolete.

Do Not Write Below This Line

Yellow: TSDF SENDS THIS COPY TO GENERATOR WITHIN 30 DAYS

01W11882

State of California—Health and Welfare Agency
Form Approved OMB No. 2050—0039 (Expires 9-30-9)
Please print or type. *(Form designed for use on elite (12-pitch typewriter).*

Department of Health Services
Toxic Substances Control Division
Sacramento, California

UNIFORM HAZARDOUS WASTE MANIFEST

1. Generator's US EPA ID No. CAD008325334 — Manifest Document No. 89022

2. Page 1 of 2

Information in the shaded areas is not required by Federal law.

3. Generator's Name and Mailing Address
ALLIED SIGNAL AEROSPACE-ELECTRODYNAMICS DIVISION
11600 SHERMAN WAY, N. HOLLYWOOD, CA 91605

4. Generator's Phone (818) 765-1010

A. State Manifest Document Number: 88300211

B. State Generator's ID: HAHD0B0206

5. Transporter 1 Company Name: OILASOLVENT PROCESS CO.

6. US EPA ID Number: CAD008302903

C. State Transporter's ID: 01248

D. Transporter's Phone: (818) 334-5117

7. Transporter 2 Company Name

8. US EPA ID Number

E. State Transporter's ID

F. Transporter's Phone

9. Designated Facility Name and Site Address
OIL & SOLVENT PROCESS CO
1704 W. FIRST ST.
AZUSA, CA 91702

10. US EPA ID Number: CAD008302903

G. State Facility's ID: CAD008302903

H. Facility's Phone: (818) 334-5117

11. US DOT Description (Including Proper Shipping Name, Hazard Class, and ID Number)	12. Containers No.	Type	13. Total Quantity	14. Unit Wt/Vol	Waste No.
a. RQ,WASTE FLAMMABLE LIQUID,N.O.S.,FLAMMABLE LIQUID, UN1993(D001)(Red oil and heptane)	001	DM	0050	G	State 214 / EPA/Other D001
b. RQ,WASTE HEPTANE,FLAMMABLE LIQUID,UN1206(D001)	001	DM	0050	G	State 213 / EPA/Other D001
c. WASTE KEROSENE,COMBUSTIBLE LIQUID,UN1223	001	DM	0050	G	State 221 / EPA/Other N/A
d. WASTE HYDRAULIC FLUID,CALIFORNIA REGULATED ONLY (skydrol and water)	007	DM	0030	G	State 221 / EPA/Other N/A

J. Additional Descriptions for Materials Listed Above
Profile a.-LAXF28556-red oil and heptane
b.-LAXF28557-heptane
c.-LAXF28609-kerosene
d.-LAXF28554-skydrol and water

K. Handling Codes for Wastes Listed Above
a. 01 b. 01
c. 01 d. 01

15. Special Handling Instructions and Additional Information
USE APPROPRIATE PERSONAL PROTECTIVE EQUIPMENT

16.
GENERATOR'S CERTIFICATION: I hereby declare that the contents of this consignment are fully and accurately described above by proper shipping name and are classified, packed, marked, and labeled, and are in all respects in proper condition for transport by highway according to applicable international and national government regulations.

If I am a large quantity generator, I certify that I have a program in place to reduce the volume and toxicity of waste generated to the degree I have determined to be economically practicable and that I have selected the practicable method of treatment, storage, or disposal currently available to me which minimizes the present and future threat to human health and the environment; OR, if I am a small quantity generator, I have made a good faith effort to minimize my waste generation and select the best waste management method that is available to me and that I can afford.

Printed/Typed Name: Mary McLaughlin — Signature — Month Day Year: APRIL 19

17. Transporter 1 Acknowledgement of Receipt of Materials
Printed/Typed Name: ED GUERRERO — Signature — Month Day Year: 04 21 89

18. Transporter 2 Acknowledgement of Receipt of Materials
Printed/Typed Name — Signature — Month Day Year

19. Discrepancy Indication Space

20. Facility Owner or Operator Certification of receipt of hazardous materials covered by this manifest except as noted in Item 19.
Printed/Typed Name: Tolly Tague — Signature — Month Day Year: 04 21 89

GENERATOR — TRANSPORTER — FACILITY

IN CASE OF AN EMERGENCY OR SPILL, CALL THE NATIONAL RESPONSE CENTER 1-800-424-8802; WITHIN CALIFORNIA CALL 1-800-852-7550

DHS 8022 A (1/88)
EPA 8700—22
(Rev. 9-88) Previous editions are obsolete.

Do Not Write Below This Line

Yellow: TSDF SENDS THIS COPY TO GENERATOR WITHIN 30 DAYS

Please print or type. (Form designed for use on elite (12-pitch) typewriter.) Form Approved. OMB No. 2000-0404 Expires 7-31-86

UNIFORM HAZARDOUS WASTE MANIFEST *(Continuation Sheet)*

21. Generator's US EPA ID No.: CAD008325334 — Manifest Document No.: 89022

22. Page: 2 — Information in the shaded areas is not required by Federal law.

23. Generator's Name
ALLIED SIGNAL AEROSPACE-ELECTRODYNAMICS DIVISION
11600 SHERMAN WAY, N. HOLLYWOOD, CA 91605

L. State Manifest Document Number: 88300211
M. State Generator's ID: HAHQ 36032067

24. Transporter ____ Company Name: OIL AND SOLVENT PROCESS CO
25. US EPA ID Number: CAD008302903
N. State Transporter's ID: 012128
O. Transporter's Phone: (818)334-5117

26. Transporter ____ Company Name:
27. US EPA ID Number:
P. State Transporter's ID:
Q. Transporter's Phone:

28. US DOT Description *(Including Proper Shipping Name, Hazard Class, and ID Number)*	29. Containers No.	Type	30. Total Quantity	31. Unit Wt/Vol	R. Waste No.
a.					
b.					
c.					
d.					
e. RQ,WASTE 1,1,1 TRICHLOROETHANE,ORM-A UN2831(F001)	003	DM	00150	G	211 F001
f.					
g.					
h.					
i.					

S. Additional Descriptions for Materials Listed Above
Profile e. LAXG93094 Waste TRI

T. Handling Codes for Wastes Listed Above
01

32. Special Handling Instructions and Additional Information
USE APPROPRIATE PERSONAL PROTECTIVE EQUIPMENT

33. Transporter ____ Acknowledgement of Receipt of Materials
Printed/Typed Name: Ed Gaeuvero — Signature: Ed Gaeuvero — Date: Month 08 Day 21 Year 87

34. Transporter ____ Acknowledgement of Receipt of Materials
Printed/Typed Name: — Signature: — Date: Month Day Year

35. Discrepancy Indication Space

GENERATOR — TRANSPORTER — FACILITY

California—Health and Welfare Agency
Approved OMB No. 2050—0039 (Expires 9-30-91)
Print or type. (Form designed for use on elite (12-pitch typewriter).

Department of Health Services
Toxic Substances Control Division
Sacramento, California

UNIFORM HAZARDOUS WASTE MANIFEST

1. Generator's US EPA ID No. CA D 0 0 8 3 2 5 3 3 4 | Manifest Document No. 8 9 0 2 1

2. Page 1 of 4

Information in the shaded areas is not required by Federal law.

3. Generator's Name and Mailing Address
ALLIED SIGNAL AEROSPACE-ELECTRODYNAMICS DIVISION
11600 SHERMAN WAY, N. HOLLYWOOD, CA 91605

4. Generator's Phone (818 765-1010

A. State Manifest Document Number 88457009

B. State Generator's ID H A H 0 3 6 0 3 2 0 6 7

5. Transporter 1 Company Name DISPOSAL CONTROL SERVICE

6. US EPA ID Number C A T 0 8 0 0 3 4 1 8 4

C. State Transporter's ID 907068

D. Transporter's Phone (800) 824-3348

7. Transporter 2 Company Name

8. US EPA ID Number

E. State Transporter's ID

F. Transporter's Phone

9. Designated Facility Name and Site Address
CHEMICAL WASTE MANAGEMENT
35251 OLD SKYLINE ROAD
KETTLEMAN CITY, CA 93239

10. US EPA ID Number C A T 0 0 0 6 4 6 1 1 7

G. State Facility's ID C A T 0 0 0 6 4 6 1 1 7

H. Facility's Phone (209) 386-9711

11. US DOT Description (Including Proper Shipping Name, Hazard Class, and ID Number)	12. Containers No.	Type	13. Total Quantity	14. Unit Wt/Vol	I. Waste No.
a. RQ,HAZARDOUS WASTE SOLID,N.O.S.,ORM-E,NA9189 (D006,D007,D008)(EPA TOXICITY)(CHROME CAKES)	0 0 8	D F	00002	Y	State 181 / EPA/Other D006,D007,D008
b.					State / EPA/Other
c.					State / EPA/Other
d.					State / EPA/Other

J. Additional Descriptions for Materials Listed Above
PROFILE LAX G24718
CHROME CAKES FROM CHROME REDUCTION

K. Handling Codes for Wastes Listed Above
a. b. c. d.

15. Special Handling Instructions and Additional Information
(8x55gal poly's)
WEAR APPROPRIATE PERSONAL PROTECTIVE EQUIPMENT

16.
GENERATOR'S CERTIFICATION: I hereby declare that the contents of this consignment are fully and accurately described above by proper shipping name and are classified, packed, marked, and labeled, and are in all respects in proper condition for transport by highway according to applicable international and national government regulations.

If I am a large quantity generator, I certify that I have a program in place to reduce the volume and toxicity of waste generated to the degree I have determined to be economically practicable and that I have selected the practicable method of treatment, storage, or disposal currently available to me which minimizes the present and future threat to human health and the environment; OR, if I am a small quantity generator, I have made a good faith effort to minimize my waste generation and select the best waste management method that is available to me and that I can afford.

Printed/Typed Name: MARY McLAUGHLIN | Signature: Mary McLaughlin | Month Day Year: 08 01 87

17. Transporter 1 Acknowledgement of Receipt of Materials
Printed/Typed Name: Michael B. VanAlstine | Signature: Michael B. VanAlstine | Month Day Year: 08 01 87

18. Transporter 2 Acknowledgement of Receipt of Materials
Printed/Typed Name | Signature | Month Day Year

19. Discrepancy Indication Space

20. Facility Owner or Operator Certification of receipt of hazardous materials covered by this manifest except as noted in Item 19.
Printed/Typed Name | Signature | Month Day Year

GENERATOR
TRANSPORTER
FACILITY

IN CASE OF AN EMERGENCY OR SPILL, CALL THE NATIONAL RESPONSE CENTER 1-800-424-8802; WITHIN CALIFORNIA CALL 1-800-852-7550

DHS 8022 A (1/88)
EPA 8700—22
(Rev. 9-88) Previous editions are obsolete.

Do Not Write Below This Line

Yellow: TSDF SENDS THIS COPY TO GENERATOR WITHIN 30 DAYS

State of California—Health and Welfare Agency
Form Approved OMB No. 2050—0039 (Expires 9-30-91)
Please print or type. (Form designed for use on [illegible] (12-pitch typewriter).

Department of Health Services
Toxic Substances Control Division
Sacramento, California

UNIFORM HAZARDOUS WASTE MANIFEST

1. Generator's US EPA ID No.: CAD008325334
Manifest Document No.: 89020
2. Page 1 of 1
Information in the shaded areas is not required by Federal law.

3. Generator's Name and Mailing Address
ALLIED SIGNAL AEROSPACE-ELECTRODYNAMICS DIVISION
11600 SHERMAN WAY, N. HOLLYWOOD, CA 91605
4. Generator's Phone (818) 765-1010

A. State Manifest Document Number: 88457008
B. State Generator's ID: HAH036032067

5. Transporter 1 Company Name: DISPOSAL CONTROL SERVICE
6. US EPA ID Number: CAT080034184
C. State Transporter's ID: 907102
D. Transporter's Phone: (800) 824-3345

7. Transporter 2 Company Name:
8. US EPA ID Number:
E. State Transporter's ID:
F. Transporter's Phone:

9. Designated Facility Name and Site Address
CHEMICAL WASTE MANAGEMENT
35251 OLD SKYLINE ROAD
KETTLAMAN CITY, CA 93239
10. US EPA ID Number: CAT000646117
G. State Facility's ID: CAT000646117
H. Facility's Phone: (209) 386-9711

11. US DOT Description (Including Proper Shipping Name, Hazard Class, and ID Number)	12. Containers No.	Type	13. Total Quantity	14. Unit Wt/Vol	I. Waste No.
a. RQ,HAZARDOUS WASTE SOLID, N.O.S., ORM-E,NA 9189 (CONTAMINATED SOIL)	001	CM	000115	Y	State 181 / EPA/Other N/A
b.					State / EPA/Other
c.					State / EPA/Other
d.					State / EPA/Other

J. Additional Descriptions for Materials Listed Above
PROFILE LAX J 38900
SOIL CONTAMINATED WITH MOTOR OIL FROM SITE CLEAN UP

K. Handling Codes for Wastes Listed Above
a. 03
b.
c.
d.

15. Special Handling Instructions and Additional Information
WEAR APPROPRIATE PERSONAL PROTECTIVE EQUIPMENT

16.
GENERATOR'S CERTIFICATION: I hereby declare that the contents of this consignment are fully and accurately described above by proper shipping name and are classified, packed, marked, and labeled, and are in all respects in proper condition for transport by highway according to applicable international and national government regulations.

If I am a large quantity generator, I certify that I have a program in place to reduce the volume and toxicity of waste generated to the degree I have determined to be economically practicable and that I have selected the practicable method of treatment, storage, or disposal currently available to me which minimizes the present and future threat to human health and the environment; OR, if I am a small quantity generator, I have made a good faith effort to minimize my waste generation and select the best waste management method that is available to me and that I can afford.

Printed/Typed Name: MARY McLAUGHLIN
Signature: Mary McLaughlin
Month Day Year: 07 26 89

17. Transporter 1 Acknowledgement of Receipt of Materials
Printed/Typed Name: JULIO OZHON
Signature: Julio Ozhon
Month Day Year: 07 26 89

18. Transporter 2 Acknowledgement of Receipt of Materials
Printed/Typed Name:
Signature:
Month Day Year:

19. Discrepancy Indication Space
11. Improper DOT BC
I. State code (223) BC

20. Facility Owner or Operator Certification of receipt of hazardous materials covered by this manifest except as noted in Item 19.
Printed/Typed Name: B. Campbell
Signature: Barb Campbell
Month Day Year: 07 26 89

GENERATOR
TRANSPORTER
FACILITY

IN CASE OF AN EMERGENCY OR SPILL, CALL THE NATIONAL RESPONSE CENTER 1-800-424-8802; WITHIN CALIFORNIA CALL 1-800-852-7550

88457008

DHS 8022 A (1/88)
EPA 8700—22
(Rev. 9-88) Previous editions are obsolete.

Do Not Write Below This Line

Yellow: TSDF SENDS THIS COPY TO GENERATOR WITHIN 7NS

000022

15-14

State of California—Health and Welfare Agency
Form Approved OMB No. 2050—0039 (Expires 9-30-9[illegible])
Please print or type. (Form designed for use on elite [illegible]pitch typewriter).

Department of Health Services
Toxic Substances Control Division
Sacramento, California

UNIFORM HAZARDOUS WASTE MANIFEST

1. Generator's US EPA ID No.: CAD008325334
Manifest Document No.: 89019

2. Page 1 of 1

Information in the shaded areas is not required by Federal law.

3. Generator's Name and Mailing Address
ALLIED SIGNAL & AEROSPACE-ELECTRODYNAMICS DIVISION
11600 SHERMAN WAY, N. HOLLYWOOD, CA 91605

4. Generator's Phone (818) 765-1010

A. State Manifest Document Number: 88457006

B. State Generator's ID: HAH036032067

5. Transporter 1 Company Name: DISPOSAL CONTROL SERVICE

6. US EPA ID Number: CAT080034184

C. State Transporter's ID: 910224

D. Transporter's Phone: (800) 824-3345

7. Transporter 2 Company Name:

8. US EPA ID Number:

E. State Transporter's ID:

F. Transporter's Phone:

9. Designated Facility Name and Site Address
CHEMICAL WASTE MANAGEMENT
35251 OLD SKYLINE ROAD
KETTLEMAN CITY, CA 93239

10. US EPA ID Number: CAT000646117

G. State Facility's ID: CAT000646117

H. Facility's Phone: (209) 386-9711

11. US DOT Description (Including Proper Shipping Name, Hazard Class, and ID Number)	12. Containers No.	Type	13. Total Quantity	14. Unit Wt/Vol	I. Waste No.
a. RQ,HAZARDOUS WASTE SOLID, N.O.S., ORME, NA 9189 (CONTAMINATED SOIL)	001	CM	60015	Y	State 181 / EPA/Other N/A
b.					State / EPA/Other
c.					State / EPA/Other
d.					State / EPA/Other

J. Additional Descriptions for Materials Listed Above
PROFILE LAX J38900
SOIL CONTAMINATED WITH MOTOR OIL FROM SITE CLEAN UP

K. Handling Codes for Wastes Listed Above
a. 03
b.
c.
d.

15. Special Handling Instructions and Additional Information
WEAR APPROPRIATE PERSONAL PROTECTIVE EQUIPMENT

16.

GENERATOR'S CERTIFICATION: I hereby declare that the contents of this consignment are fully and accurately described above by proper shipping name and are classified, packed, marked, and labeled, and are in all respects in proper condition for transport by highway according to applicable international and national government regulations.

If I am a large quantity generator, I certify that I have a program in place to reduce the volume and toxicity of waste generated to the degree I have determined to be economically practicable and that I have selected the practicable method of treatment, storage, or disposal currently available to me which minimizes the present and future threat to human health and the environment; OR, if I am a small quantity generator, I have made a good faith effort to minimize my waste generation and select the best waste management method that is available to me and that I can afford.

Printed/Typed Name: MARY McLAUGHLIN
Signature: Mary McLaughlin
Month Day Year: 07 25 89

17. Transporter 1 Acknowledgement of Receipt of Materials
Printed/Typed Name: Marvin Juards
Signature: Marvin Juards
Month Day Year: 07 25 89

18. Transporter 2 Acknowledgement of Receipt of Materials
Printed/Typed Name:
Signature:
Month Day Year:

19. Discrepancy Indication Space
11. Improper DOT (BC)
I. State code (223) BC

20. Facility Owner or Operator Certification of receipt of hazardous materials covered by this manifest except as noted in Item 19.
Printed/Typed Name: B. Campbell
Signature: Barb Campbell
Month Day Year: 07 25 89

GENERATOR

TRANSPORTER

FACILITY

IN CASE OF AN EMERGENCY OR SPILL, CALL THE NATIONAL RESPONSE CENTER 1-800-424-8802; WITHIN CALIFORNIA CALL 1-800-852-7550

88457006

DHS 8022 A (1/88)
EPA 8700—22
(Rev. 9-88) Previous editions are obsolete.

7R 14 [illegible]

Do Not Write Below This Line

Yellow: TSDF SENDS THIS COPY TO GENERATOR WITHIN 30 DAYS

f California—Health and Welfare Agency
pproved OMB No. 2050—0039 (Expires 9-30-91)
print or type. (Form designed for use on elite pitch typewriter).

Department of Health Services
Toxic Substances Control Division
Sacramento, California

UNIFORM HAZARDOUS WASTE MANIFEST

Generator's US EPA ID No.: CAD008325349018

Manifest Document No.

2. Page 1 of 3

Information in the shaded areas is not required by Federal law.

3. Generator's Name and Mailing Address
ALLIED SIGNAL AEROSPACE-ELECTRODYNAMICS DIVISION
11600 SHERMAN WAY, N. HOLLYWOOD, CA 91605

4. Generator's Phone (818) 765-1010

A. State Manifest Document Number: 88457004

B. State Generator's ID: HAH036032067

5. Transporter 1 Company Name: Disposal Control

6. US EPA ID Number: CAT080034184

C. State Transporter's ID: 907080

D. Transporter's Phone: 718 983 0322

7. Transporter 2 Company Name

8. US EPA ID Number

E. State Transporter's ID

F. Transporter's Phone

9. Designated Facility Name and Site Address
ROMIC CHEMICAL CORPORATION
2081 BAY ROAD
EAST PALO ALTO, CA 94303

10. US EPA ID Number: CAD009452657

G. State Facility's ID: CAD009452657

H. Facility's Phone: (415) 324-1638

11. US DOT Description (Including Proper Shipping Name, Hazard Class, and ID Number)	12. Containers No.	Type	13. Total Quantity	14. Unit Wt/Vol	I. Waste No.
a. RQ,HAZARDOUS WASTE LIQUID, N.O.S., ORM-E,NA-9189 (Waste Coolant) DOT-E-7476	001	TT	025500	G	State; EPA/Other 223
b.					State NA; EPA/Other
c.					State; EPA/Other
d.					State; EPA/Other

J. Additional Descriptions for Materials Listed Above
PROFILE #00270 WASTE COOLANT
SEE Attach Sheets.

K. Handling Codes for Wastes Listed Above
a. 01 b.
c. d.

15. Special Handling Instructions and Additional Information
WEAR APPROPRIATE PROTECTIVE PERSONAL EQUIPMENT

16.
GENERATOR'S CERTIFICATION: I hereby declare that the contents of this consignment are fully and accurately described above by proper shipping name and are classified, packed, marked, and labeled, and are in all respects in proper condition for transport by highway according to applicable international and national government regulations.

If I am a large quantity generator, I certify that I have a program in place to reduce the volume and toxicity of waste generated to the degree I have determined to be economically practicable and that I have selected the practicable method of treatment, storage, or disposal currently available to me which minimizes the present and future threat to human health and the environment; OR, if I am a small quantity generator, I have made a good faith effort to minimize my waste generation and select the best waste management method that is available to me and that I can afford.

Printed/Typed Name: M. McLaughlin | Signature: M. McLaughlin | Month Day Year: 07 05 89

17. Transporter 1 Acknowledgement of Receipt of Materials
Printed/Typed Name: Robert J. Rider | Signature: Robert J. Rider | Month Day Year: 07 05 89

18. Transporter 2 Acknowledgement of Receipt of Materials
Printed/Typed Name | Signature | Month Day Year

19. Discrepancy Indication Space

20. Facility Owner or Operator Certification of receipt of hazardous materials covered by this manifest except as noted in Item 19.
Printed/Typed Name: Annette Kluznik | Signature | Month Day Year: 07 06 89

Do Not Write Below This Line

GENERATOR

TRANSPORTER

FACILITY

IN CASE OF AN EMERGENCY OR SPILL, CALL THE NATIONAL RESPONSE CENTER 1-800-424-8802; WITHIN CALIFORNIA CALL 1-800-852-7550

88457004

DHS 8022 A (1/88)
EPA 8700—22
(Rev. 9-88) Previous editions are obsolete.

Yellow: TSDF SENDS THIS COPY TO GENERATOR WITHIN 30 DAYS

of California—Health and Welfare Agency
Approved OMB No. 2050—0039 (Expires 9-[illegible]-91)
e print or type. (Form designed for use on [illegible] 12-pitch typewriter).

Department of Health Services
Toxic Substances Control Division
Sacramento, California

UNIFORM HAZARDOUS WASTE MANIFEST

1. Generator's US EPA ID No.: CAD008325334 — Manifest Document No.: 000017

2. Page 1 of 1

Information in the shaded areas is not required by Federal law.

3. Generator's Name and Mailing Address
ALLIED SIGNAL AEROSPACE CO, ELECTRODYNAMICS DIVISION
11600 SHERMAN WAY, N. HOLLYWOOD, CA 91605

4. Generator's Phone (818) 765-1010

A. State Manifest Document Number: 88457003

B. State Generator's ID: HAHQ36009097

5. Transporter 1 Company Name: DISPOSAL CONTROL SERVICE — 6. US EPA ID Number: CAT080034184

C. State Transporter's ID: ~~912752~~/960180

D. Transporter's Phone: (714) 983-0342

7. Transporter 2 Company Name — 8. US EPA ID Number

E. State Transporter's ID: ~~912752~~ MM

F. Transporter's Phone

9. Designated Facility Name and Site Address
CHEMICAL WASTE MANAGEMENT
35251 OLD SKYLINE ROAD
KETTLEMAN CITY, CA 93239

10. US EPA ID Number: CAT000646117

G. State Facility's ID: CAT000646117

H. Facility's Phone: (209) 386-9711

11. US DOT Description (Including Proper Shipping Name, Hazard Class, and ID Number)	12. Containers No.	Type	13. Total Quantity	14. Unit Wt/Vol	I. Waste No.
a. RQ,WASTE CYANIDE MIXTURE,DRY, POISON B,UN1588(D006)	001	DM	000325	Y	State 181 / EPA/Other D006
b.					State / EPA/Other
c.					State / EPA/Other
d.					State / EPA/Other

J. Additional Descriptions for Materials Listed Above

K. Handling Codes for Wastes Listed Above: a. b. c. d.

15. Special Handling Instructions and Additional Information
WEAR APPROPRIATE PERSONAL PROTECTIVE EQUIPMENT
EXTREMELY HAZARDOUS WASTE DISPOSAL PERMIT # 3-88071812

Profile # H56416

16.

GENERATOR'S CERTIFICATION: I hereby declare that the contents of this consignment are fully and accurately described above by proper shipping name and are classified, packed, marked, and labeled, and are in all respects in proper condition for transport by highway according to applicable international and national government regulations.

If I am a large quantity generator, I certify that I have a program in place to reduce the volume and toxicity of waste generated to the degree I have determined to be economically practicable and that I have selected the practicable method of treatment, storage, or disposal currently available to me which minimizes the present and future threat to human health and the environment; OR, if I am a small quantity generator, I have made a good faith effort to minimize my waste generation and select the best waste management method that is available to me and that I can afford.

Printed/Typed Name: M. McLaughlin — Signature: M. McLaughlin — Month Day Year: 06 14 89

17. Transporter 1 Acknowledgement of Receipt of Materials

Printed/Typed Name: Steve Gentile — Signature: Steve Gentile — Month Day Year: 6 14 89

18. Transporter 2 Acknowledgement of Receipt of Materials

Printed/Typed Name — Signature — Month Day Year

19. Discrepancy Indication Space

20. Facility Owner or Operator Certification of receipt of hazardous materials covered by this manifest except as noted in Item 19.

Printed/Typed Name: Ricardo S. Abelleira — Signature: Ricardo S. Abelleira — Month Day Year: 06 20 89

GENERATOR — TRANSPORTER — FACILITY

IN CASE OF AN EMERGENCY OR SPILL, CALL THE NATIONAL RESPONSE CENTER 1-800-424-8802, WITHIN CALIFORNIA CALL 1-800-852-7550

88457003

8022 A (1/88)
8700—22
(9-88) Previous editions are obsolete.

Do Not Write Below This Line

Yellow: TSDF SENDS THIS COPY TO GENERATOR WITHIN 30 DAYS

California—Health and Welfare Agency
Approved OMB No. 2050—0039 (Expires 9-30-9[illegible])
Print or type. (Form designed for use on elite [illegible]pitch typewriter).

Department of Health Services
Toxic Substances Control Division
Sacramento, California

UNIFORM HAZARDOUS WASTE MANIFEST

1. Generator's US EPA ID No.: CAD008325334 — Manifest Document No.: 00016
2. Page 1 of 1

Information in the shaded areas is not required by Federal law.

3. Generator's Name and Mailing Address
ALLIED SIGNAL AEROSPACE CO, ELECTRODYNAMICS DIVISION
11600 SHERMAN WAY, N. HOLLYWOOD, CA 91605

4. Generator's Phone (818) 765-1010

A. State Manifest Document Number: 88457002
B. State Generator's ID: HAH036009097
C. State Transporter's ID: 907277
D. Transporter's Phone: (818) 334-5117
E. State Transporter's ID:
F. Transporter's Phone:
G. State Facility's ID: CAD008302903
H. Facility's Phone: (818) 334-5117

5. Transporter 1 Company Name: OIL AND SOLVENT PROCESS CO
6. US EPA ID Number: CAD008302903
7. Transporter 2 Company Name:
8. US EPA ID Number:

9. Designated Facility Name and Site Address
OIL & SOLVENT PROCESS CO
1704 W. FIRST STREET
AZUSA, CA 91702

10. US EPA ID Number: CAD008302903

11. US DOT Description (Including Proper Shipping Name, Hazard Class, and ID Number)	12. Containers No.	Type	13. Total Quantity	14. Unit Wt/Vol	I. Waste No.
a. RQ,WASTE FLAMMABLE LIQUID, N.O.S., UN 1993 (D001) (WASTE RED OIL & HEPTANE)	002	DM	00100	G	State 214 EPA/Other D001
b. RQ,WASTE HEPTANE, FLAMMABLE LIQUID,UN1206 (d001)	002	DM	00100	G	State 213 EPA/Other D001
c. WASTE FLAMMABLE LIQUID, N.O.S., UN 1993(F003) (WASTE PAINT AND THINNERS)	001	DM	00050	G	State 461 EPA/Other F003
d. RQ, WASTE 1,1,1 TRICHLOROETHANE, ORM-A,UN2831(F001)	014	DM	00700	G	State 211 EPA/Other F001

J. Additional Descriptions for Materials Listed Above
a) Profile LAXF28556 Waste Oil & Heptane
b) LAXF28557 Waste Heptane
c) LAXF28563 Waste Paint & Thinners
d) LAXG93094 WASTE 1,1,1 Trichloroethane

K. Handling Codes for Wastes Listed Above
a. 01 b. 01
c. 01 d. 01

15. Special Handling Instructions and Additional Information
USE APPROPRIATE PERSONAL PROTECTIVE EQUIPMENT

16.
GENERATOR'S CERTIFICATION: I hereby declare that the contents of this consignment are fully and accurately described above by proper shipping name and are classified, packed, marked, and labeled, and are in all respects in proper condition for transport by highway according to applicable international and national government regulations.

If I am a large quantity generator, I certify that I have a program in place to reduce the volume and toxicity of waste generated to the degree I have determined to be economically practicable and that I have selected the practicable method of treatment, storage, or disposal currently available to me which minimizes the present and future threat to human health and the environment; OR, if I am a small quantity generator, I have made a good faith effort to minimize my waste generation and select the best waste management method that is available to me and that I can afford.

Printed/Typed Name: M. McLaughlin — Signature: [signature] — Month Day Year: 06 14 89

17. Transporter 1 Acknowledgement of Receipt of Materials
Printed/Typed Name: ED Guerrero — Signature: Ed Guerrero — Month Day Year: 06 14 89

18. Transporter 2 Acknowledgement of Receipt of Materials
Printed/Typed Name: — Signature: — Month Day Year:

19. Discrepancy Indication Space

20. Facility Owner or Operator Certification of receipt of hazardous materials covered by this manifest except as noted in Item 19.
Printed/Typed Name: Mike A Gilham — Signature: [signature] — Month Day Year: 06 14 89

GENERATOR — TRANSPORTER — FACILITY

IN CASE OF AN EMERGENCY OR SPILL, CALL THE NATIONAL RESPONSE CENTER 1-800-424-8802; WITHIN CALIFORNIA CALL 1-800-852-7550

88457002

2254-15, 16, 17, 18

DHS 8022 A (1/88)
EPA 8700—22
(Rev. 9-88) Previous editions are obsolete.

Do Not Write Below This Line

Yellow: TSDF SENDS THIS COPY TO GENERATOR WITHIN 30 DAYS

5874

State of California—Health and Welfare Agency
Form Approved OMB No. 2050—0039 (Expires 9-30
Please print or type. (Form designed for use on elite 12-pitch typewriter).

Department of Health Services
Toxic Substances Control Division
Sacramento, California

UNIFORM HAZARDOUS WASTE MANIFEST

1. Generator's US EPA ID No.: C A D 0 0 8 3 2 5 3 3 4 — Manifest Document No.: 0 0 0 1 5

2. Page 1 of 1

Information in the shaded areas is not required by Federal law.

3. Generator's Name and Mailing Address
ALLIED-SIGNAL AAEROSPACE COMPANY, ELECTRODYNAMICS DIV.
11600 SHERMAN WAY, N. HOLLYWOOD CA 91605

4. Generator's Phone (818) 765-1010

A. State Manifest Document Number: 88300210

B. State Generator's ID: 10 H A H 0 0 3 6 0 0 0 0 9 7

5. Transporter 1 Company Name: DISPOSAL CONTROL SERVICE

6. US EPA ID Number: C A T 0 3 0 0 3 4 1 8 4

C. State Transporter's ID: 907012

D. Transporter's Phone: 800 824-3345

7. Transporter 2 Company Name:

8. US EPA ID Number:

E. State Transporter's ID:

F. Transporter's Phone:

9. Designated Facility Name and Site Address
DEMENNO KERDOON
2100 N. ALAMEDA ST
COMPTON, CA 90222

10. US EPA ID Number: C A T 0 8 0 0 1 3 3 5 2

G. State Facility's ID: C A T 0 8 0 0 1 3 3 5 2

H. Facility's Phone: 213 537 7100

11. US DOT Description (Including Proper Shipping Name, Hazard Class, and ID Number)	12. Containers No.	Type	13. Total Quantity	14. Unit Wt/Vol	I. Waste No.
a. WASTE PETROLEYUM OIL N.O.S., COMBUSTIBLE LIQUID UN 1270	0 0 1	T T	0 0 0 0 0	G	State 221 / EPA/Other N/A
b.					State / EPA/Other
c.					State / EPA/Other
d.	1	6	0		State / EPA/Other

J. Additional Descriptions for Materials Listed Above
WASTE SOLUBLE OIL 2%
LUBRICATING OIL 20%
HYDRAULIC OIL 60%
WATER 20%

K. Handling Codes for Wastes Listed Above
a. 01
b.
c.
d.

15. Special Handling Instructions and Additional Information
USE APPROPIATE PERSONAL PROTECTIVE EQUIPMENT

16.
GENERATOR'S CERTIFICATION: I hereby declare that the contents of this consignment are fully and accurately described above by proper shipping name and are classified, packed, marked, and labeled, and are in all respects in proper condition for transport by highway according to applicable international and national government regulations.

If I am a large quantity generator, I certify that I have a program in place to reduce the volume and toxicity of waste generated to the degree I have determined to be economically practicable and that I have selected the practicable method of treatment, storage, or disposal currently available to me which minimizes the present and future threat to human health and the environment; OR, if I am a small quantity generator, I have made a good faith effort to minimize my waste generation and select the best waste management method that is available to me and that I can afford.

Printed/Typed Name: R. OSEAS — Signature: R Oseas — Month Day Year: 05 04 89

17. Transporter 1 Acknowledgement of Receipt of Materials
Printed/Typed Name: DAVE DADE — Signature: [signature] — Month Day Year: 05 04 89

18. Transporter 2 Acknowledgement of Receipt of Materials
Printed/Typed Name: — Signature: — Month Day Year:

19. Discrepancy Indication Space

20. Facility Owner or Operator Certification of receipt of hazardous materials covered by this manifest except as noted in Item 19.
Printed/Typed Name: ARTURO B. PEREZ — Signature: [signature] — Month Day Year: 05 04 89

GENERATOR — TRANSPORTER — FACILITY

IN CASE OF AN EMERGENCY OR SPILL, CALL THE NATIONAL RESPONSE CENTER 1-800-424-8802; WITHIN CALIFORNIA CALL 1-800-852-7550

8 8300210

DHS 8022 A (1/88)
EPA 8700—22
(Rev. 9-88) Previous editions are obsolete.

Do Not Write Below This Line

Yellow: TSDF SENDS THIS COPY TO GENERATOR WITHIN 30 DAYS

O/W8970

State of California—Health and Welfare Agency
Form Approved OMB No. 2050—0039 (Expires 9-30-
Please print or type. (Form designed for use on elite (12-pitch typewriter).

Department of Health Services
Toxic Substances Control Division
Sacramento, California

UNIFORM HAZARDOUS WASTE MANIFEST

1. Generator's US EPA ID No.: CAD008326334 — Manifest Document No.: 00013
2. Page 1 of 1 — Information in the shaded areas is not required by Federal law.

3. Generator's Name and Mailing Address
ALLIED-SIGNAL AEROSPACE CO., ELECTRODYNAMICS DIV.
11600 SHERMAN WAY, N. HOLLYWOOD, CA 91606

4. Generator's Phone 818 765-1010

A. State Manifest Document Number: 88300208 ✓
B. State Generator's ID: HAH036009097
C. State Transporter's ID:
D. Transporter's Phone: 800 824 2345
E. State Transporter's ID: 907073
F. Transporter's Phone:

5. Transporter 1 Company Name: DISPOSAL CONTROL SERVICE
6. US EPA ID Number: CAT080034184
7. Transporter 2 Company Name:
8. US EPA ID Number:

9. Designated Facility Name and Site Address
DEMMENO KERDOON
2100 N. ALAMEDA ST. COMPTON, CA 90222
10. US EPA ID Number: CAT080013352

G. State Facility's ID: CAT080013352
H. Facility's Phone: 213 537 7100

11. US DOT Description (Including Proper Shipping Name, Hazard Class, and ID Number)	12. Containers No.	Type	13. Total Quantity	14. Unit Wt/Vol	I. Waste No.
a. HAZARDOUS WASTE LIQUID, N.O.S., ORM-E NA 9189	001	TT	03000	G	State 221 / EPA/Other N/A
b.					State / EPA/Other
c.					State / EPA/Other
d.					State / EPA/Other

J. Additional Descriptions for Materials Listed Above
WATER SOLUBLE ~~LIQUID~~ OILS
LUBRICATING OILS
WATER PER PROFILE

K. Handling Codes for Wastes Listed Above
a. 01
b.
c.
d.

15. Special Handling Instructions and Additional Information
USE APPROPRIATE PERSONAL PROTECTIVE EQUIPMENT

16.
GENERATOR'S CERTIFICATION: I hereby declare that the contents of this consignment are fully and accurately described above by proper shipping name and are classified, packed, marked, and labeled, and are in all respects in proper condition for transport by highway according to applicable international and national government regulations.

If I am a large quantity generator, I certify that I have a program in place to reduce the volume and toxicity of waste generated to the degree I have determined to be economically practicable and that I have selected the practicable method of treatment, storage, or disposal currently available to me which minimizes the present and future threat to human health and the environment; OR, if I am a small quantity generator, I have made a good faith effort to minimize my waste generation and select the best waste management method that is available to me and that I can afford.

Printed/Typed Name: R. OSEAS — Signature: R Oseas — Month Day Year: 04 18 89

17. Transporter 1 Acknowledgement of Receipt of Materials
Printed/Typed Name: Loy Driggers — Signature: [signature] — Month Day Year: 04 18 89

18. Transporter 2 Acknowledgement of Receipt of Materials
Printed/Typed Name: — Signature: — Month Day Year:

19. Discrepancy Indication Space

20. Facility Owner or Operator Certification of receipt of hazardous materials covered by this manifest except as noted in Item 19.
Printed/Typed Name: ARTURO B. PEREZ — Signature: Arturo B Perez — Month Day Year: 04 18 89

GENERATOR — TRANSPORTER — FACILITY

IN CASE OF AN EMERGENCY OR SPILL, CALL THE NATIONAL RESPONSE CENTER 1-800-424-8802; WITHIN CALIFORNIA CALL 1-800-852-7550

DHS 8022 A (1/88)
EPA 8700—22
(Rev. 9-88) Previous editions are obsolete.

Do Not Write Below This Line

Yellow: TSDF SENDS THIS COPY TO GENERATOR WITHIN 30 DAYS

8578 HZO

State of California—Health and Welfare Agency
Form Approved OMB No. 2050—0039 (Expires 9-30-
Please print or type. (Form designed for use on elite 12-pitch typewriter).

Department of Health Services
Toxic Substances Control Division
Sacramento, California

UNIFORM HAZARDOUS WASTE MANIFEST

1. Generator's US EPA ID No.: CAD008325334 — Manifest Document No.: 00012

2. Page 1 of 1

Information in the shaded areas is not required by Federal law.

3. Generator's Name and Mailing Address
ALLIED-SIGNAL AEROSPACE COMPANY, ELECTRODYNAMICS DIV
11600 SHERMAN WAY, N. HOLLYWOOD CA 91605

4. Generator's Phone (818) 765-1010

A. State Manifest Document Number: 88300207

B. State Generator's ID: HAHQ360009097

5. Transporter 1 Company Name: DISPOSAL CONTROL SERVICE

6. US EPA ID Number: CAT030034184

C. State Transporter's ID: 907068

D. Transporter's Phone: 800 824 3345

7. Transporter 2 Company Name:

8. US EPA ID Number:

E. State Transporter's ID:

F. Transporter's Phone:

9. Designated Facility Name and Site Address
ROMIC CHEMICAL CORP
2081 BAY ROAD
EAST PALO ALTO, CA 94303

10. US EPA ID Number: CAD009452657

G. State Facility's ID: CAD009452657

H. Facility's Phone: 415 324 1638

11. US DOT Description (Including Proper Shipping Name, Hazard Class, and ID Number)	12. Containers No.	Type	13. Total Quantity	14. Unit Wt/Vol	I. Waste No.
a. RQ, HAZARDOUS WASTE LIQUID, N.O.S., ORM-E NA 9189 (WASTE BLUE DYE)	004	DF	00200	G	State 135 / EPA/Other NA
b. RQ, HAZARDOUS WASTE LIQUID, N.O.S., ORM-E NA 9189 (WAST ALODINE)	004	DF	00200	G	State 135 / EPA/Other NA
c.					State / EPA/Other
d.					State / EPA/Other

J. Additional Descriptions for Materials Listed Above
a) Profile 004664 (waste blue dye)
b) Profile 004665 (waste Alodine 1200)

K. Handling Codes for Wastes Listed Above
a. 01 b. ~~01~~ JB
c. d.

15. Special Handling Instructions and Additional Information
USE APPROPRIATE PERSONAL PROTECTIVE EQUIPMENT (Overpacked in 85 steel Drums) (8x55 gall. Poly Drums)

16.
GENERATOR'S CERTIFICATION: I hereby declare that the contents of this consignment are fully and accurately described above by proper shipping name and are classified, packed, marked, and labeled, and are in all respects in proper condition for transport by highway according to applicable international and national government regulations.

If I am a large quantity generator, I certify that I have a program in place to reduce the volume and toxicity of waste generated to the degree I have determined to be economically practicable and that I have selected the practicable method of treatment, storage, or disposal currently available to me which minimizes the present and future threat to human health and the environment; OR, if I am a small quantity generator, I have made a good faith effort to minimize my waste generation and select the best waste management method that is available to me and that I can afford.

Printed/Typed Name: R. OSEAS — Signature: R. Oseas — Month Day Year: 04 12 89

17. Transporter 1 Acknowledgement of Receipt of Materials
Printed/Typed Name: Michael B. Van Alstine — Signature: Michael B Van Alstine — Month Day Year: 04 12 89

18. Transporter 2 Acknowledgement of Receipt of Materials
Printed/Typed Name: — Signature: — Month Day Year:

19. Discrepancy Indication Space
~~4-6 — 4 Drums rejected at Romic Chem. — D.C.S. Picked up 4-27-89~~
[signature]

20. Facility Owner or Operator Certification of receipt of hazardous materials covered by this manifest except as noted in Item 19.
Printed/Typed Name: Annette Kluznik — Signature: Annette Kluznik — Month Day Year: 04 12 89

GENERATOR — TRANSPORTER — FACILITY

IN CASE OF AN EMERGENCY OR SPILL, CALL THE NATIONAL RESPONSE CENTER 1-800-424-8802; WITHIN CALIFORNIA CALL 1-800-852-7550

88300207

DHS 8022 A (1/88)
EPA 8700—22
(Rev. 9-88) Previous editions are obsolete.

Do Not Write Below This Line

Yellow: TSDF SENDS THIS COPY TO GENERATOR WITHIN 30 DAYS

State of California—Health and Welfare Agency
Form Approved OMB No. 2050—0039 (Expires 9-30-
Please print or type. *(Form designed for use on elite (12-pitch typewriter).*

Department of Health Services
Toxic Substances Control Division
Sacramento, California

UNIFORM HAZARDOUS WASTE MANIFEST

1. Generator's US EPA ID No. CAD008325334 — Manifest Document No. 00011

2. Page 1 of 1

Information in the shaded areas is not required by Federal law.

3. Generator's Name and Mailing Address
ALLIED-SIGNAL AEROSPACE CO., ELECTRODYNAMICS DIV
11600 SHERMAN WAY, N. HOLLYWOOD, CA 91605

4. Generator's Phone (818) 765-1010

A. State Manifest Document Number: 88300206

B. State Generator's ID: HAR036009097

5. Transporter 1 Company Name: DISPOSAL CONTROL SERVICES

6. US EPA ID Number: CAT080034184

C. State Transporter's ID: 907090

D. Transporter's Phone: 800 824 3345

7. Transporter 2 Company Name

8. US EPA ID Number

E. State Transporter's ID

F. Transporter's Phone

9. Designated Facility Name and Site Address
ROMIC CHEMICAL CORP
2081 BAY ROAD
EAST PALO ALTO, CA 94303

10. US EPA ID Number: CAD009452657

G. State Facility's ID: CAD009452657

H. Facility's Phone: 415 324 1638

11. US DOT Description (Including Proper Shipping Name, Hazard Class, and ID Number)	12. Containers No.	Type	13. Total Quantity	14. Unit Wt/Vol	Waste No.
a. RQ, HAZARDOUS WASTE LIQUID, NOS NA 9189 (waste oil)	001	TT	02000	G	State 223 / EPA/Other NR
b.					State / EPA/Other
c.					State / EPA/Other
d.					State / EPA/Other

J. Additional Descriptions for Materials Listed Above
a) Profile 004667 (waste quenching oil)

K. Handling Codes for Wastes Listed Above
a. 01 b. c. d.

15. Special Handling Instructions and Additional Information
USE APPROPRIATE PERSONAL PROTECTIVE EQUIPMENT

16.
GENERATOR'S CERTIFICATION: I hereby declare that the contents of this consignment are fully and accurately described above by proper shipping name and are classified, packed, marked, and labeled, and are in all respects in proper condition for transport by highway according to applicable international and national government regulations.

If I am a large quantity generator, I certify that I have a program in place to reduce the volume and toxicity of waste generated to the degree I have determined to be economically practicable and that I have selected the practicable method of treatment, storage, or disposal currently available to me which minimizes the present and future threat to human health and the environment; OR, if I am a small quantity generator, I have made a good faith effort to minimize my waste generation and select the best waste management method that is available to me and that I can afford.

Printed/Typed Name: R. OSEAS — Signature: [signature] — Month Day Year: 040389

TRANSPORTER

17. Transporter 1 Acknowledgement of Receipt of Materials
Printed/Typed Name: LAWRENCE D. KOLLING — Signature: [signature] — Month Day Year: 040389

18. Transporter 2 Acknowledgement of Receipt of Materials
Printed/Typed Name — Signature — Month Day Year

FACILITY

19. Discrepancy Indication Space

20. Facility Owner or Operator Certification of receipt of hazardous materials covered by this manifest except as noted in Item 19.
Printed/Typed Name: Annette Kluznik — Signature: [signature] — Month Day Year: 040489

IN CASE OF AN EMERGENCY OR SPILL, CALL THE NATIONAL RESPONSE CENTER 1-800-424-8802; WITHIN CALIFORNIA CALL 1-800-852-7550

GENERATOR

DHS 8022 A (1/88)
EPA 8700—22
(Rev. 9-88) Previous editions are obsolete.

Do Not Write Below This Line

Yellow: TSDF SENDS THIS COPY TO GENERATOR WITHIN 30 DAYS

State of California—Health and Welfare Agency
Form Approved OMB No. 2050—0039 (Expires 9-30
Please print or type. (Form designed for use on elite (12-pitch typewriter).

MAR 3 1989

Department of Health Services
Toxic Substances Control Division
Sacramento, California

UNIFORM HAZARDOUS WASTE MANIFEST

1. Generator's US EPA ID No.: C A D 0 0 8 3 2 3 3 3 4 — Manifest Document No.: 0 0 0 1 0

2. Page 1 of 1

Information in the shaded areas is not required by Federal law.

3. Generator's Name and Mailing Address
ALLIED-SIGNAL AEROSPACE COMPANY, ELECTRODYNAMICS DIV
11600 SHERMAN WAY, N. HOLLYWOOD, CA 91605

4. Generator's Phone (818) 765-10810

A. State Manifest Document Number: 88300205

B. State Generator's ID: H A N Q 3 6 0 0 9 0 9 7

5. Transporter 1 Company Name: OIL & SOLVENT PROCESS CO.

6. US EPA ID Number: C A D 0 0 8 3 0 2 9 0 3

C. State Transporter's ID: 906344

D. Transporter's Phone: 818 334-5117

7. Transporter 2 Company Name:

8. US EPA ID Number:

E. State Transporter's ID:

F. Transporter's Phone:

9. Designated Facility Name and Site Address
OIL & SOLVENT PROCESS CO.
1704 W. FIRST STREET
AZUSA, CA 91702

10. US EPA ID Number: C A D 0 0 8 3 0 2 9 0 3

G. State Facility's ID: C A D 0 0 8 3 0 2 9 0 3

H. Facility's Phone: 818 334-5117

11. US DOT Description (Including Proper Shipping Name, Hazard Class, and ID Number)	12. Containers No.	Type	13. Total Quantity	14. Unit Wt/Vol	I. Waste No.
a. RQ, WASTE 1,1,1-TRICHLOROETHANE ORM-A UN 2831 (F001)	004		00200		State 221 EPA/Other F001
b. HAZARDOUS WASTE LIQUID N.O.S., ORM-E NA 9189 (F005) (WASTE SKYDROL AND WATER)	018		00900		State NA EPA/Other F005
c. RQ, WASTE FLAMMABLE LIQUID N.O.S., UN 1993 (D001) (WASTE RED OIL AND HEPTANE)	001	DM	00050	G	State 214 EPA/Other D001
d. RQ, WASTE HEPTANE FLAMMABLE LIQUID UN 1206 (D001)	001	DM	00050	G	State NA EPA/Other D001

J. Additional Descriptions for Materials Listed Above
a) PROFILE G93094 (WASTE 1,1,1-TRICHLOROETHANE)
b) F28554 (WASTE SKYDROL & WATER)
c) F28556 (WASTE RED OIL & HEPTANE)
d) F28557 (WASTE HEPTANE)

K. Handling Codes for Wastes Listed Above
a. 01 b. 01
c. 01 d. 01

15. Special Handling Instructions and Additional Information

USE APPROPRIATE PERSONAL PROTECTIVE EQUIPMENT

16.

GENERATOR'S CERTIFICATION: I hereby declare that the contents of this consignment are fully and accurately described above by proper shipping name and are classified, packed, marked, and labeled, and are in all respects in proper condition for transport by highway according to applicable international and national government regulations.

If I am a large quantity generator, I certify that I have a program in place to reduce the volume and toxicity of waste generated to the degree I have determined to be economically practicable and that I have selected the practicable method of treatment, storage, or disposal currently available to me which minimizes the present and future threat to human health and the environment; OR, if I am a small quantity generator, I have made a good faith effort to minimize my waste generation and select the best waste management method that is available to me and that I can afford.

Printed/Typed Name: ROBIN OSEAS — Signature: Robin Oseas — Month Day Year: 022889

17. Transporter 1 Acknowledgement of Receipt of Materials
Printed/Typed Name: DON NEDWARDS — Signature: Donald N — Month Day Year: 022889

18. Transporter 2 Acknowledgement of Receipt of Materials
Printed/Typed Name: — Signature: — Month Day Year:

19. Discrepancy Indication Space

20. Facility Owner or Operator Certification of receipt of hazardous materials covered by this manifest except as noted in Item 19.
Printed/Typed Name: MIKE A. GILHAM — Signature: [signature] — Month Day Year: 022889

GENERATOR — TRANSPORTER — FACILITY

IN CASE OF AN EMERGENCY OR SPILL, CALL THE NATIONAL RESPONSE CENTER 1-800-424-8802; WITHIN CALIFORNIA CALL 1-800-852-7550

DHS 8022 A (1/88)
EPA 8700—22
(Rev. 9-88) Previous editions are obsolete.

Do Not Write Below This Line

Yellow: TSDF SENDS THIS COPY TO GENERATOR WITHIN 30 DAYS

State of California—Health and Welfare Agency
Form Approved OMB No. 2050—0039 (Expires 9-30-9[illegible])
Please print or type. (Form designed for use on elite [illegible] pitch typewriter).

Department of Health Services
Toxic Substances Control Division
Sacramento, California

UNIFORM HAZARDOUS WASTE MANIFEST

1. Generator's US EPA ID No.: C A D 0 0 8 3 2 5 3 3 4
Manifest Document No.: 0 0 0 0 7

2. Page 1 of 1

Information in the shaded areas is not required by Federal law.

3. Generator's Name and Mailing Address
ALLIED - SIGNAL AEROSPACE CO., ELECTRODYNAMICS DIV.
11600 SHERMAN WAY, N. HOLLYWOOD, CA 91605

4. Generator's Phone (818) 765-1010

A. State Manifest Document Number: 88300203

B. State Generator's ID: H A H 0 3 6 0 0 9 0 9 7

5. Transporter 1 Company Name: DISPOSAL CONTROL SERVICE

6. US EPA ID Number: C A T 0 8 0 0 3 4 1 8 4

C. State Transporter's ID: ~~907068~~ 901070

D. Transporter's Phone: (914) 983-0342

7. Transporter 2 Company Name:

8. US EPA ID Number:

E. State Transporter's ID:

F. Transporter's Phone:

9. Designated Facility Name and Site Address
CHEMICAL WASTE MANAGEMENT
35251 OLD SKYLINE DRIVE
KETTLEMAN CITY, CA 93239

10. US EPA ID Number: C A T 0 0 0 6 4 6 1 1 7

G. State Facility's ID: C A T 0 0 0 6 4 6 1 1 7

H. Facility's Phone: *(800) 222-2964

11. US DOT Description (Including Proper Shipping Name, Hazard Class, and ID Number)	12. Containers No.	Type	13. Total Quantity	14. Unit Wt/Vol	I. Waste No.
a. RQ, HAZARDOUS WASTE LIQUID N.O.S., NA 9189 (D007) (WASTE WYANDOTTE 2487)	0 0 8	D F	0 0 4 0 0	G	State 135 / EPA/Other D007
b.					State / EPA/Other
c.					State / EPA/Other
d.					State / EPA/Other

J. Additional Descriptions for Materials Listed Above
a) Profile LAX H65934 (waste Wyandotte 2487)

K. Handling Codes for Wastes Listed Above
a. b. c. d.

15. Special Handling Instructions and Additional Information
WEAR APPROPRIATE PERSONAL PROTECTIVE EQUIPMENT

16.
GENERATOR'S CERTIFICATION: I hereby declare that the contents of this consignment are fully and accurately described above by proper shipping name and are classified, packed, marked, and labeled, and are in all respects in proper condition for transport by highway according to applicable international and national government regulations.

If I am a large quantity generator, I certify that I have a program in place to reduce the volume and toxicity of waste generated to the degree I have determined to be economically practicable and that I have selected the practicable method of treatment, storage, or disposal currently available to me which minimizes the present and future threat to human health and the environment; OR, if I am a small quantity generator, I have made a good faith effort to minimize my waste generation and select the best waste management method that is available to me and that I can afford.

Printed/Typed Name: ROBIN OSEAS
Signature: [signature]
Month Day Year: 02 24 89

17. Transporter 1 Acknowledgement of Receipt of Materials
Printed/Typed Name: Michael B. VanAlstine
Signature: [signature]
Month Day Year: 02 24 89

18. Transporter 2 Acknowledgement of Receipt of Materials
Printed/Typed Name:
Signature:
Month Day Year:

19. Discrepancy Indication Space

20. Facility Owner or Operator Certification of receipt of hazardous materials covered by this manifest except as noted in Item 19.
Printed/Typed Name: Ricardo S. Abelleira
Signature: [signature]
Month Day Year: 03 02 89

GENERATOR — TRANSPORTER — FACILITY

IN CASE OF AN EMERGENCY OR SPILL, CALL THE NATIONAL RESPONSE CENTER 1-800-424-8802; WITHIN CALIFORNIA CALL 1-800-852-7550

DHS 8022 A (1/88)
EPA 8700—22
(Rev. 9-88) Previous editions are obsolete.

Do Not Write Below This Line

Yellow: TSDF SENDS THIS COPY TO GENERATOR WITHIN 30 DA

#3239

BP 50175
XN3716

State of California—Health and Welfare Agency
Form Approved OMB No. 2050—0039 (Expires 9-30)
Please print or type. *(Form designed for use on elite (12-pitch typewriter).*

Department of Health Services
Toxic Substances Control Division
Sacramento, California

UNIFORM HAZARDOUS WASTE MANIFEST

1. Generator's US EPA ID No.: CAD008325334 — Manifest Document No.: 00006
2. Page 1 of 1
Information in the shaded areas is not required by Federal law.

3. Generator's Name and Mailing Address
ALLIED-SIGNAL AEROSPACE CO., ELECTRODYNAMICS DIVISION
11600 SHERMAN WAY
NORTH HOLLYWOOD, CA 91605
4. Generator's Phone (818)765-1010

A. State Manifest Document Number: 88302127
B. State Generator's ID: HAH036009097
C. State Transporter's ID: 907090
D. Transporter's Phone: 714-983-0342
E. State Transporter's ID:
F. Transporter's Phone:

5. Transporter 1 Company Name: DISPOSAL CONTROL SERVICE
6. US EPA ID Number: CAT080034184
7. Transporter 2 Company Name:
8. US EPA ID Number:

9. Designated Facility Name and Site Address
DEMMENO KERDOON
2100 N. ALAMEDA ST COMPTON, CA 90222
10. US EPA ID Number: CAT080013352

G. State Facility's ID: CAT080013352
H. Facility's Phone: (213)537-7100

11. US DOT Description (Including Proper Shipping Name, Hazard Class, and ID Number)	12. Containers No.	Type	13. Total Quantity	14. Unit Wt/Vol	I. Waste No.
a. HAZARDOUS WASTE LIQUID, N.O.S., ORM-E, NA 9189	001	TT	02590	G	State 221 / EPA/Other N/A
b.					State / EPA/Other
c.					State / EPA/Other
d.					State / EPA/Other

J. Additional Descriptions for Materials Listed Above
WATER SOLUBLE OILS
LUBRICATING OILS
WATER PER PROFILE

K. Handling Codes for Wastes Listed Above
a. 01
b.
c.
d.

15. Special Handling Instructions and Additional Information
USE APPROPRIATE PERSONAL PROTECTIVE EQUIPMENT

16.
GENERATOR'S CERTIFICATION: I hereby declare that the contents of this consignment are fully and accurately described above by proper shipping name and are classified, packed, marked, and labeled, and are in all respects in proper condition for transport by highway according to applicable international and national government regulations.

If I am a large quantity generator, I certify that I have a program in place to reduce the volume and toxicity of waste generated to the degree I have determined to be economically practicable and that I have selected the practicable method of treatment, storage, or disposal currently available to me which minimizes the present and future threat to human health and the environment; OR, if I am a small quantity generator, I have made a good faith effort to minimize my waste generation and select the best waste management method that is available to me and that I can afford.

Printed/Typed Name: ROBIN OSEAS — Signature: Robin Oseas — Month Day Year: 02 20 89

17. Transporter 1 Acknowledgement of Receipt of Materials
Printed/Typed Name: LAWRENCE D. KOLLING — Signature: Lawrence D. Kolling — Month Day Year: 02 20 89

18. Transporter 2 Acknowledgement of Receipt of Materials
Printed/Typed Name: — Signature: — Month Day Year:

19. Discrepancy Indication Space

20. Facility Owner or Operator Certification of receipt of hazardous materials covered by this manifest except as noted in Item 19.
Printed/Typed Name: JOHN PEARMAN — Signature: John Pearman — Month Day Year: 02 20 89

GENERATOR — TRANSPORTER — FACILITY

IN CASE OF AN EMERGENCY OR SPILL, CALL THE NATIONAL RESPONSE CENTER 1-800-424-8802; WITHIN CALIFORNIA CALL 1-800-852-7550

88302127

DHS 8022 A (1/88)
EPA 8700—22
(Rev. 9-88) Previous editions are obsolete.

Do Not Write Below This Line

Yellow: TSDF SENDS THIS COPY TO GENERATOR WITHIN 30 DAYS

OLW 7058

State of California—Health and Welfare Agency
Form Approved OMB No. 2050-0039 (Expires 9-30-
Please print or type. (Form designed for use on elite (12-pitch typewriter).

Department of Health Services
Toxic Substances Control Division
Sacramento, California

UNIFORM HAZARDOUS WASTE MANIFEST

1. Generator's US EPA ID No.: CAD008325334 — Manifest Document No.: 00005
2. Page 1 of 1

Information in the shaded areas is not required by Federal law.

3. Generator's Name and Mailing Address: Allied Signal, Electrodynamics, 11600 Sherman Way, N. Hollywood, CA 91605
4. Generator's Phone: 818 765-1010

A. State Manifest Document Number: 88302125
B. State Generator's ID: HAHA36009097
C. State Transporter's ID: 907057
D. Transporter's Phone: 8008243345
E. State Transporter's ID: 910195
F. Transporter's Phone:

5. Transporter 1 Company Name: Disposal Control Service
6. US EPA ID Number: CAT030034184
7. Transporter 2 Company Name:
8. US EPA ID Number:

9. Designated Facility Name and Site Address: Romic Chemical Corp, 2081 Bay Road, East Palo Alto CA 94303
10. US EPA ID Number: CAD009452657

G. State Facility's ID: CAD009452657
H. Facility's Phone: 415 324-1638

11. US DOT Description (Including Proper Shipping Name, Hazard Class, and ID Number)	12. Containers No.	Type	13. Total Quantity	14. Unit Wt/Vol	I. Waste No.
a. RQ Waste Flammable Liquid, NOS UN1993 (D001) (Waste Varnish	001	DM	00050	G	State 343; EPA/Other D001
b.					State; EPA/Other
c.					State; EPA/Other
d.					State; EPA/Other

J. Additional Descriptions for Materials Listed Above
1) Profile 000269
Waste Varnish

K. Handling Codes for Wastes Listed Above
a. 01
b.
c.
d.

15. Special Handling Instructions and Additional Information
USE Appropriate Safety Equipment

16.
GENERATOR'S CERTIFICATION: I hereby declare that the contents of this consignment are fully and accurately described above by proper shipping name and are classified, packed, marked, and labeled, and are in all respects in proper condition for transport by highway according to applicable international and national government regulations.

If I am a large quantity generator, I certify that I have a program in place to reduce the volume and toxicity of waste generated to the degree I have determined to be economically practicable and that I have selected the practicable method of treatment, storage, or disposal currently available to me which minimizes the present and future threat to human health and the environment; OR, if I am a small quantity generator, I have made a good faith effort to minimize my waste generation and select the best waste management method that is available to me and that I can afford.

Printed/Typed Name: R.A. Oseas — Signature: RA Oseas — Month Day Year: 02 17 89

17. Transporter 1 Acknowledgement of Receipt of Materials
Printed/Typed Name: Jimmy Lizardo — Signature: Jimmy Lizardo — Month Day Year: 02 17 89

18. Transporter 2 Acknowledgement of Receipt of Materials
Printed/Typed Name: Thom. Sitek SR — Signature: Thom C Sitek SR — Month Day Year: 02 23 89

19. Discrepancy Indication Space

20. Facility Owner or Operator Certification of receipt of hazardous materials covered by this manifest except as noted in Item 19
Printed/Typed Name: Annette Kluznik — Signature: Annette Kluznik — Month Day Year: 02 23 89

GENERATOR — TRANSPORTER — FACILITY

IN CASE OF AN EMERGENCY OR SPILL, CALL THE NATIONAL RESPONSE CENTER 1-800-424-8802; WITHIN CALIFORNIA CALL 1-800-852-7550

88302125

DHS 8022 A (1/88)
EPA 8700—22
(Rev. 9-88) Previous editions are obsolete.

Do Not Write Below This Line

Yellow: TSDF SENDS THIS COPY TO GENERATOR WITHIN 30 DAYS

State of California—Health and Welfare Agency
Form Approved OMB No. 2050—0039 (Expires 9-3
Please print or type. (Form designed for use on elite 12-pitch typewriter).

Department of Health Services
Toxic Substances Control Division
Sacramento, California

UNIFORM HAZARDOUS WASTE MANIFEST

1. Generator's US EPA ID No.: CAD008325334 Manifest Document No.: 00002

2. Page 1 of 7

Information in the shaded areas is not required by Federal law.

3. Generator's Name and Mailing Address: Bendix - Electrodynamics, 11600 Sherman Way, Ni Hollywood CA. 91605

4. Generator's Phone: (818) 503-3409

A. State Manifest Document Number: 88303451

B. State Generator's ID:

5. Transporter 1 Company Name: Disposal Control Service

6. US EPA ID Number: CAT080034184

C. State Transporter's ID: 903068

D. Transporter's Phone: (714) 983-0342

7. Transporter 2 Company Name: AMERICAN ENVIRON. MGMT. CORP.

8. US EPA ID Number: CAD980884183

E. State Transporter's ID: 907844

F. Transporter's Phone: 714-826-6320

9. Designated Facility Name and Site Address: AMERICAN ENVIROMENTAL, 10960 Boatman Ave., STANTON CA. 90680

10. US EPA ID Number: CAD980884183

G. State Facility's ID:

H. Facility's Phone: (916) 985-6666

11. US DOT Description (Including Proper Shipping Name, Hazard Class, and ID Number)	12. Containers No.	Type	13. Total Quantity	14. Unit Wt/Vol	I. Waste No.
a. RQ WASTE CORROSIVE Solid NOS. CORROSIVE MATERIAL UN1759 D002	001	DM	000 1/16	Y	State 551 EPA/Other D002
b. RQ WASTE Flammable Solid NOS. Flammable Liquid UN1325 D001	004	DM	000 1/2	Y	State 551 EPA/Other D001
c. RQ HAZARDOUS WASTE Solid NOS. ORM-E NA9189	001	DM	0000 1/4	Y	State 551 EPA/Other N/A
d.					State EPA/Other

J. Additional Descriptions for Materials Listed Above:
11A) DRUM # 16, SEE ATTACHED CONT. SHEET.
11B) DRUMS # 2, 20, 21, 22 SEE ATTACHED CONT SHEETS
11C) DRUM # 23 - SEE ATTACHED CONT SHEET

K. Handling Codes for Wastes Listed Above: a. 14 b. 14 c. 14 d.

15. Special Handling Instructions and Additional Information:
WEAR APPROPRIATE SAFETY EQUIPMENT
KEEP AWAY FROM OPEN FLAME AEMC JOB# 20728

16.

GENERATOR'S CERTIFICATION: I hereby declare that the contents of this consignment are fully and accurately described above by proper shipping name and are classified, packed, marked, and labeled, and are in all respects in proper condition for transport by highway according to applicable international and national government regulations.

If I am a large quantity generator, I certify that I have a program in place to reduce the volume and toxicity of waste generated to the degree I have determined to be economically practicable and that I have selected the practicable method of treatment, storage, or disposal currently available to me which minimizes the present and future threat to human health and the environment; OR, if I am a small quantity generator, I have made a good faith effort to minimize my waste generation and select the best waste management method that is available to me and that I can afford.

Printed/Typed Name	Signature	Month Day Year
HUGH R KELLENBERGER	[signature]	02 08 89

17. Transporter 1 Acknowledgement of Receipt of Materials

Printed/Typed Name	Signature	Month Day Year
Michael B Van Alstine	Michael B Van Alstine	02 08 89

18. Transporter 2 Acknowledgement of Receipt of Materials

Printed/Typed Name	Signature	Month Day Year
FRED MELILLO/Rodney Cleem	Fred Melillo/Rodney Cleem	02 09 89

19. Discrepancy Indication Space
#2 :- ONLY PAGE 1 OF 1

20. Facility Owner or Operator Certification of receipt of hazardous materials covered by this manifest except as noted in Item 19.

Printed/Typed Name	Signature	Month Day Year
ROB YORKE	Rob Yorke	02 16 89

(1/88)
22
Previous editions are obsolete.

Do Not Write Below This Line

Yellow: TSDF SENDS THIS COPY TO GENERATOR WITHIN 30 DAYS

GENERATOR

1-800-424-8802, WITHIN CALIFORNIA CALL 1-800-852-7550

State of California—Health and Welfare Agency
Form Approved OMB No. 2050—0039 (Expires 9-3[illegible])
Please print or type. (Form designed for use on elite (12-pitch typewriter).

Instructions on the Back

Department of Health Services
Toxic Substances Control Division
Sacramento, California

88140389

UNIFORM HAZARDOUS WASTE MANIFEST

1. Generator's US EPA ID No.: C A D 0 0 8 3 2 5 3 3 4 | Manifest Document No.: 0 0 0 2

2. Page 1 of 1

Information in the shaded areas is not required by Federal law.

3. Generator's Name and Mailing Address
ALLIED SIGNAL AEROSPACE, ELECTRODYNAMICS DIV.
11600 SHERMAN WAY, N. HOLLYWOOD CA 91606

4. Generator's Phone (818 765-1010

A. State Manifest Document Number: 88140389

B. State Generator's ID: H A H 0 3 6 0 0 0 0 9 7

5. Transporter 1 Company Name: DISPOSAL CONTROL SERVICE

6. US EPA ID Number: C A T 0 3 0 0 5 4 1 8 4

C. State Transporter's ID:

D. Transporter's Phone: (800) 624-3345

7. Transporter 2 Company Name:

8. US EPA ID Number:

E. State Transporter's ID: 910275

F. Transporter's Phone:

9. Designated Facility Name and Site Address
DEMENNO KERDOON
2100 N. ALAMEDA ST
COMPTON, CA 90222

10. US EPA ID Number: C A T 0 8 0 0 1 4 3 5 2

G. State Facility's ID: C A T 0 8 0 0 1 5 3 5 2

H. Facility's Phone: (213) 537-7100

11. US DOT Description (Including Proper Shipping Name, Hazard Class, and ID Number)	12. Containers No.	12. Containers Type	13. Total Quantity	14. Unit Wt/Vol	I. Waste No.
a. WASTE PETROLEYUM OIL N.O.S., COMBUSTIBLE LIQUID UN 1270	0 01	TP	1600	G	State 221 / EPA/Other N/A
b.					State / EPA/Other
c.					State / EPA/Other
d.					State / EPA/Other

J. Additional Descriptions for Materials Listed Above
WASTE SOLUBLE OIL 2%
LUBRICATING OIL 20%
HYDRAULIC OIL 60%
WATER 20%

K. Handling Codes for Wastes Listed Above
a. 01 b.
c. d.

15. Special Handling Instructions and Additional Information
USE APPROPRIATE PERSONAL PROTECTIVE EQUIPMENT

16.
GENERATOR'S CERTIFICATION: I hereby declare that the contents of this consignment are fully and accurately described above by proper shipping name and are classified, packed, marked, and labeled, and are in all respects in proper condition for transport by highway according to applicable international and national government regulations.

If I am a large quantity generator, I certify that I have a program in place to reduce the volume and toxicity of waste generated to the degree I have determined to be economically practicable and that I have selected the practicable method of treatment, storage, or disposal currently available to me which minimizes the present and future threat to human health and the environment; OR, if I am a small quantity generator, I have made a good faith effort to minimize my waste generation and select the best waste management method that is available to me and that I can afford.

GENERATOR — Printed/Typed Name: ROBIN OSEAS | Signature: Robin Oseas | Month Day Year: 9 1 5 8 9

TRANSPORTER — 17. Transporter 1 Acknowledgement of Receipt of Materials
Printed/Typed Name: JAMES LAWRENCE | Signature: James Lawrence | Month Day Year: 9 1 8 8 9

18. Transporter 2 Acknowledgement of Receipt of Materials
Printed/Typed Name: | Signature: | Month Day Year:

FACILITY — 19. Discrepancy Indication Space

20. Facility Owner or Operator Certification of receipt of hazardous materials covered by this manifest except as noted in Item 19.
Printed/Typed Name: Joe Tamborello | Signature: Joseph Tamborello | Month Day Year: 9 1 8 8 9

IN CASE OF AN EMERGENCY OR SPILL, CALL THE NATIONAL RESPONSE CENTER 1-800-424-8802; WITHIN CALIFORNIA CALL, 1-800-852-7550

DHS 8022 A (1/88)
EPA 8700—22
(Rev. 9-86) Previous editions are obsolete.

Do Not Write Below This Line

Yellow: TSDF SENDS THIS COPY TO GENERATOR WITHIN 30 DAY

State of California—Health and Welfare Agency
Form Approved OMB No. 2050—0039 (Expires 9-[illegible])
Please print or type. (Form designed for use on elite (12-pitch typewriter).

Department of Health Services
Toxic Substances Control Division
Sacramento, California

UNIFORM HAZARDOUS WASTE MANIFEST

1. Generator's US EPA ID No.: CAD088325334 — Manifest Document No.: 00001
2. Page 1 of 18 — Information in the shaded areas is not required by Federal law.

3. Generator's Name and Mailing Address: Bendix - Electrodynamics, 11600 Sherman Way, N. Hollywood CA. 91605
4. Generator's Phone: (818) 503-3409
A. State Manifest Document Number: 88303450
B. State Generator's ID:
5. Transporter 1 Company Name: Disposal Control Service
6. US EPA ID Number: CAT080034184
C. State Transporter's ID: 907068
D. Transporter's Phone: (714) 983-0342
7. Transporter 2 Company Name: AMERICAN ENVIR. MGMT. CORP.
8. US EPA ID Number: CAD980884183
E. State Transporter's ID: 907844
F. Transporter's Phone: 714-826-6320
9. Designated Facility Name and Site Address: AMERICAN ENVIROMENTAL, 10960 Boatman Ave, Stanton CA. 90680
10. US EPA ID Number: CAD980884183
G. State Facility's ID:
H. Facility's Phone: (916) 985-6666

11. US DOT Description (Including Proper Shipping Name, Hazard Class, and ID Number)	12. Containers No.	Type	13. Total Quantity	14. Unit Wt/Vol	I. Waste No.
a. RQ Waste Flammable Liquid NOS. Flammable Liquid UN 1993 D001	914	DM	00145	G	State 551 / EPA/Other D001
b. RQ Waste Corrosive Liqud NOS. Corrosive Material UN 1760 D002	003	DM	00003	G	State 551 / EPA/Other D002
c.					State / EPA/Other
d.					State / EPA/Other

J. Additional Descriptions for Materials Listed Above
11A) Drums #1,3,4,5,6,7,8,9,10,11,12,13,14,19 SEE ATTACHED CONT. SHEETS
11B) Drums # 15,17,18 SEE ATTACHED CONT SHEETS

K. Handling Codes for Wastes Listed Above
a. 14 b. 14
c. d.

15. Special Handling Instructions and Additional Information
WEAR APPROPRIATE SAFETY EQUIPMENT
KEEP AWAY FROM OPEN FLAME AEMC JOB #20728

16.
GENERATOR'S CERTIFICATION: I hereby declare that the contents of this consignment are fully and accurately described above by proper shipping name and are classified, packed, marked, and labeled, and are in all respects in proper condition for transport by highway according to applicable international and national government regulations.

If I am a large quantity generator, I certify that I have a program in place to reduce the volume and toxicity of waste generated to the degree I have determined to be economically practicable and that I have selected the practicable method of treatment, storage, or disposal currently available to me which minimizes the present and future threat to human health and the environment; OR, if I am a small quantity generator, I have made a good faith effort to minimize my waste generation and select the best waste management method that is available to me and that I can afford.

Printed/Typed Name: Hugh R Kellenberger — Signature: [signature] — Month Day Year: 02 [illegible] 89

17. Transporter 1 Acknowledgement of Receipt of Materials
Printed/Typed Name: Michael B. Van Alstine — Signature: Michael B. Van Alstine — Month Day Year: 02 08 89

18. Transporter 2 Acknowledgement of Receipt of Materials
Printed/Typed Name: FRED MELILLO/Rodney Cleem — Signature: Fred Melillo/Rodney Cleem — Month Day Year: 02 09 89

19. Discrepancy Indication Space
#2 S/E PAGE 1 OF 1.

20. Facility Owner or Operator Certification of receipt of hazardous materials covered by this manifest except as noted in Item 19.
Printed/Typed Name: ROB YORKE — Signature: Rob Yorke — Month Day Year: 02 16 89

GENERATOR — TRANSPORTER — FACILITY

88303450 NATIONAL RESPONSE CENTER 1-800-424-8802; WITHIN CALIFORNIA CALL 1-800-852-7550

2 A (1/88)
0—22
8) Previous editions are obsolete.

Do Not Write Below This Line

Yellow: TSDF SENDS THIS COPY TO GENERATOR WITHIN 30 DAYS

State of California—Health and Welfare Agency
Form Approved OMB No. 2050—0039 (Expires 9-30-8[illegible])
Please print or type. (Form designed for use on elite [illegible] pitch typewriter).

Instructions on the Back

Department of Health Services
Toxic Substances Control Division
Sacramento, California

UNIFORM HAZARDOUS WASTE MANIFEST

1. Generator's US EPA ID No.: CAD008325334 — Manifest Document No.: 00001
2. Page 1 of 2

Information in the shaded areas is not required by Federal law.

3. Generator's Name and Mailing Address
ALLIED-SIGNAL AEROSPACE COMPANY, ELECTRODYNAMICS DIV.
11600 SHERMAN WAY, NORTH HOLLYWOOD CA 91605

4. Generator's Phone (818) 765-1010

A. State Manifest Document Number: 88140388
B. State Generator's ID: HAH036009097

5. Transporter 1 Company Name: DISPOSAL CONTROL SERVICE
6. US EPA ID Number: CAT030034184
C. State Transporter's ID: 907068
D. Transporter's Phone: (800)824-3345

7. Transporter 2 Company Name:
8. US EPA ID Number:
E. State Transporter's ID:
F. Transporter's Phone:

9. Designated Facility Name and Site Address
OIL AND SOLVENT PROCESS COMPANY
1704 W. First Street
Asuza, CA 91702
10. US EPA ID Number: CAD008302903
G. State Facility's ID: CAD008302903
H. Facility's Phone: (818)334-5117

11. US DOT Description (Including Proper Shipping Name, Hazard Class, and ID Number)	12. Containers No.	Type	13. Total Quantity	14. Unit Wt/Vol	I. Waste No.
a. RQ, WASTE FLAMMABLE LIQUID N.O.S. UN 1993 (D001) (WASTE RED OIL & HEPTANE)	002	DM	00100	G	State 214 / EPA/Other D001
b. WASTE ORM-A N.O.S., ORM-A NA 1693 (F001) (WASTE FREON)	001	DM	00050	G	State 741 / EPA/Other F001
c. RQ, WASTE 1,1,1-TRICHLOROETHANE ORM-A UN 2831 (DF001)	003	DM	00150	G	State 741 / EPA/Other F001
d. HAZARDOUS WASTE LIQUID N.O.S., ORM-E, NA 9189 (F005) (WASTE SKYDROL & WATER)	009	DM	00450	G	State 221 / EPA/Other F005

J. Additional Descriptions for Materials Listed Above
a) PROFILE LAX F28556 (waste ~~skydrol~~ Red Oil & heptane)
b) G93212 (waste freon)
c) G93094
d) F28554 (waste skydrol & water)

K. Handling Codes for Wastes Listed Above
a. 01 b. 01
c. 01 d. 01

15. Special Handling Instructions and Additional Information

USE APPROPRIATE PERSONAL PROTECTIVE EQUIPMENT

16.

GENERATOR'S CERTIFICATION: I hereby declare that the contents of this consignment are fully and accurately described above by proper shipping name and are classified, packed, marked, and labeled, and are in all respects in proper condition for transport by highway according to applicable international and national government regulations.

If I am a large quantity generator, I certify that I have a program in place to reduce the volume and toxicity of waste generated to the degree I have determined to be economically practicable and that I have selected the practicable method of treatment, storage, or disposal currently available to me which minimizes the present and future threat to human health and the environment; OR, if I am a small quantity generator, I have made a good faith effort to minimize my waste generation and select the best waste management method that is available to me and that I can afford.

Printed/Typed Name: ROBIN OSEAS — Signature: [signature] — Month Day Year: 01 09 88

17. Transporter 1 Acknowledgement of Receipt of Materials
Printed/Typed Name: Michael B. Van Alstine — Signature: Michael B. Van Alstine — Month Day Year: 01 09 89

18. Transporter 2 Acknowledgement of Receipt of Materials
Printed/Typed Name: — Signature: — Month Day Year:

19. Discrepancy Indication Space

20. Facility Owner or Operator Certification of receipt of hazardous materials covered by this manifest except as noted in Item 19.
Printed/Typed Name: MIKE COWLES — Signature: Mike Cowles — Month Day Year: 01 11 89

GENERATOR — TRANSPORTER — FACILITY

IN CASE OF AN EMERGENCY OR SPILL, CALL THE NATIONAL RESPONSE CENTER 1-800-424-8802; WITHIN CALIFORNIA CALL 1-800-852-7550

88140388

DHS 8022 A (1/88)
EPA 8700—22
(Rev. 9-86) Previous editions are obsolete.

Do Not Write Below This Line

Yellow: TSDF SENDS THIS COPY TO GENERATOR WITHIN 30 DAYS

Please print or type: (Form designed for use on elite (12-pitch) typewriter.) Form Approved. OMB No. 2000-0404. Expires 7-31-86

UNIFORM HAZARDOUS WASTE MANIFEST (Continuation Sheet)	21. Generator's US EPA ID No. CAD008325334	Manifest Document No. 00001	22. Page 2	Information in the shaded areas is not required by Federal law.

23. Generator's Name
ALLIED-SIGNAL AEROSPACE COMPANY, ELECTRODYNAMICS DIVISION
11600 SHERMAN WAY, NORTH HOLLYWOOD CA 91605
(818)765-1010

L. State Manifest Document Number: 88140388
M. State Generator's ID: HAH036009097

24. Transporter 1 Company Name: DISPOSAL CONTROL SERVICES
25. US EPA ID Number: CAT030034184
N. State Transporter's ID: 907068
O. Transporter's Phone: (800)824-3345

26. Transporter ___ Company Name
27. US EPA ID Number
P. State Transporter's ID
Q. Transporter's Phone

GENERATOR

28. US DOT Description (Including Proper Shipping Name, Hazard Class, and ID Number)	29. Containers No.	Type	30. Total Quantity	31. Unit Wt/Vol	R. Waste No.
a.					
b.					
c.					
d.					
e. WASTE FLAMMABLE LIQUID N.O.S. UN 1993 (F003) (waste paint & sludge)	001	DM	00050	G	461 F003
f. RQ, WASTE HEPTANE FLAMMABLE LIQUID UN 1206 (D001)	001	DM	00050	G	213 D001
g.					
h.					
i.					

S. Additional Descriptions for Materials Listed Above
e) PROFILE LAX F28563 (waste paint)
f) F28557 (waste heptane)

T. Handling Codes for Wastes Listed Above
01

32. Special Handling Instructions and Additional Information
USE APPROPRIATE PERSONAL PROTECTIVE EQUIPMENT

TRANSPORTER

33. Transporter ___ Acknowledgement of Receipt of Materials
Printed/Typed Name: MICHAEL B. VAN ALSTINE
Signature: Michael B Van Alstine
Date: Month 01 Day 10 Year 89

34. Transporter ___ Acknowledgement of Receipt of Materials
Printed/Typed Name
Signature
Date: Month Day Year

FACILITY

35. Discrepancy Indication Space

EPA Form 8700-22A (3-84)

GEOTECHNICAL BORING LOG

6

DATE 4/13/87 & 4/14/87 DRILL HOLE NO. W-1 SHEET 1 OF 16

PROJECT Bendix/North Hollywood PROJECT NO. 3831136-07

DRILLING CO. Harold Council Drilling TYPE OF RIG Direct Rotary

HOLE DIAMETER 8-3/4" DRIVE WEIGHT 400# hydraulic push DROP None IN.

ELEVATION TOP OF HOLE 733.67' REF. OR DATUM Mean Sea Level

LOGGED BY JAC

SAMPLED BY JAC

DEPTH FEET	GRAPHIC LOG	PID READING (PPM)	TUBE SAMPLE NO.	BLOWS PER FOOT	EPA TEST METHOD PERFORMED	SOIL CLASS. (U.S.C.S.)	GEOTECHNICAL DESCRIPTION
0							ASPHALT: 6" thick
				All samples are hydraulic pushes		SM	@ 0' - drilling with air SAND: light brown to tan, slightly damp, cohesionless, poorly-sorted, coarse- to very coarse-grained, some gravel to pebble-sized semi-angular fragments, abundant black organic flecks, no odor, looks clean (ALLUVIUM)
5							
							@ 9.0' - sand sloughing into hole
10		0					@ 10.0' - no sample recovery @ 11.0' - tan, very coarse-grained, semi-rounded pebbles and cobbles of granitics to 3" diameter, no odor
15							@ 15.0' - main hydraulic line on drill rig broke, oil spilled on pavement; drill rate approx. 30'/hr., slowed down at 15' - losing air in loose sand
20		0					@ 20.0' - no sample recovery; caving problem at 20'; end of drilling 4/13/87; need to use mud to keep hole open 4/14/87 - started drilling with mud, took 2 samples of Bendix tap water used in drilling mud - S-1 and S-2, widened hole from 6" to 8 3/4" @ 24.0' - a few pebbles
25							
30							@ 30.0' - cobble zone

REVIEWED BY:

REGISTERED GEOLOGIST FRANK J. KENTON NO. EG 1251 CERTIFIED ENGINEERING GEOLOGIST STATE OF CALIFORNIA

GEOTECHNICAL BORING LOG

DATE 4/14/87 DRILL HOLE NO. W-1 SHEET 2 OF 16

PROJECT Bendix/North Hollywood PROJECT NO. 3831136-07

DRILLING CO. Harold Council Drilling TYPE OF RIG Direct Rotary

HOLE DIAMETER 8-3/4" DRIVE WEIGHT 400# hydraulic push DROP None IN.

ELEVATION TOP OF HOLE 733.67' REF. OR DATUM Mean Sea Level

LOGGED BY JAC

SAMPLED BY JAC

DEPTH FEET	GRAPHIC LOG	PID READING (PPM)	TUBE SAMPLE NO.	BLOWS PER FOOT	EPA TEST METHOD PERFORMED	SOIL CLASS. (U.S.C.S.)	GEOTECHNICAL DESCRIPTION
30		0	1	push		SW	GRAVELLY SAND: tan, cohesionless, gravel 0.1" in diameter, well-sorted, little to no fines, granitic parent material (This may be slough from side of hole with finer sand already settled out.) (ALLUVIUM)
35							
40		0	2	push			@ 40.0' - tan, poorly sorted, fine- to very-coarse grained, no odor (sample is slough: primarily gravel - bottom 18" of hole caved in)
45							
50		0	3	push			@ 50.0' - fine- to very coarse-grained, a few pebbles to 0.8" in diameter, no odor (slough as above)
						GM	COBBLES & BOULDERS: tan, cohesionless, granitic, gravelly sand matrix
55							@ 53.0'-58.0' - rocky, probably boulders
						SW	GRAVELLY SAND: as above
60						GM	COBBLES & BOULDERS: as above, sandy matrix

REVIEWED BY

REGISTERED GEOLOGIST FRANK J. KENTON NO. 5[illegible] ENGINEERING GEOLOGIST STATE OF CALIFORNIA

505A(11/77)

GEOTECHNICAL BORING LOG

DATE 4/1487 & 4/15/87 DRILL HOLE NO. W-1 SHEET 3 OF 16

PROJECT Bendix/North Hollywood PROJECT NO. 3831136-07

DRILLING CO. Harold Council Drilling TYPE OF RIG Direct Rotary

HOLE DIAMETER 8 3/4" DRIVE WEIGHT 400# hydraulic push DROP None IN.

ELEVATION TOP OF HOLE 733.67' REF. OR DATUM Mean Sea level

DEPTH FEET	GRAPHIC LOG	PID READING (PPM)	TUBE SAMPLE NO.	BLOWS PER FOOT	EPA TEST METHOD PERFORMED	SOIL CLASS. (U.S.C.S.)	GEOTECHNICAL DESCRIPTION LOGGED BY JAC SAMPLED BY JAC
60						SM	GRAVELLY SAND: tan, cohesionless, granitic, poorly sorted, fine- to very coarse-grained, no odor, abundant granitic cobbles and boulders (ALLUVIUM) @ 60.0' - no sample recovery: too rocky, drilling rate slowed to 7ft/hr.
65							@ 65.0' - tested mud with PID - no contamination
70							@ 70.0' - too hard to sample
75							
80						GM	BOULDERS: approx. 3-5' diameter, granitic, gravelly sand matrix, poorly sorted, fine- to very coarse grained @ 80.0' - too hard to sample @ 82.0' - end of drilling 4/14/87 4/15/87 - resumed drilling, bottom 3' caved in over night, drilled back down to 82' and tried to sample, no recovery
85							
90							

REVIEWED BY: ENGINEERING GEOLOGIST STATE OF CALIFORNIA

GEOTECHNICAL BORING LOG

DATE 4/15/87,4/23/87 & 4/24/87 DRILL HOLE NO. W-1 SHEET 4 OF 16

PROJECT Bendix/North Hollywood PROJECT NO. 3831136-07

DRILLING CO. Harold Council Drilling TYPE OF RIG Direct Rotary

HOLE DIAMETER See Notes DRIVE WEIGHT 400# hydraulic push DROP None IN.

ELEVATION TOP OF HOLE 733.67' REF. OR DATUM Mean Sea Level

LOGGED BY JAC

SAMPLED BY JAC

DEPTH FEET	GRAPHIC LOG	PID READING (PPM)	TUBE SAMPLE NO.	BLOWS PER FOOT	EPA TEST METHOD PERFORMED	SOIL CLASS. (U.S.C.S.)	GEOTECHNICAL DESCRIPTION
90						SM	SAND: tan, cohesionless, poorly sorted, fine- to very coarse-grained, no odor (ALLUVIUM)
95						GM	GRAVEL: tan, cohesionless, pebbles, sandy matrix, poorly sorted, fine- to very coarse-grained, no odor @ 95.0' - Tested mud sample in aluminum foil-covered glass jar using PID - no contamination detected
100							
105							@ 105.0' - 10:50 A.M. 4/15/87 completed circulating 4/16/87 - Geophysically logged hole (Barbour) 4/17&20/87 - Reamed hole to 17½" 4/21/87 - Installed conductor casing to 75' (stuck below that depth) and cemented entire hole with neat cement and 10% bentonite 4/22/87 - let cement set 4/23/87 - drilled out cement in casing and continued deepening hole with 12¼" bit
110			4	cuttings			@ 110.0' - bouncing of kelly indicates presence of cobbles, cuttings are coarse sand, gravel, and angular rock fragments to 0.1", no odor @ 111.0' - very hard, very slow drilling (may be rolling cobbles, rock fragments have a few rounded edges) @ 112.0' - checked mud with PID, no contamination measured @ 113.0' - end of drilling 4/23/87 4/24/87 - resumed drilling
115			5	cuttings		SM	GRAVELLY SAND: tan, cohesionless, poorly sorted, fine- to coarse-grained sand and gravel, no odor, occasional pebbles, primarily coarse-grained
120							

REVIEWED BY: REGISTERED GEOLOGIST FRANK J. KENTON NO. EG 1254 CERTIFIED ENGINEERING GEOLOGIST STATE OF CALIFORNIA

GEOTECHNICAL BORING LOG

DATE 4/24/87 DRILL HOLE NO. W-1 SHEET 5 OF 16

PROJECT Bendix/North Hollywood PROJECT NO. 3831136-07

DRILLING CO. Harold Council Drilling TYPE OF RIG Direct Rotary

HOLE DIAMETER 12 1/4" DRIVE WEIGHT 400# hydraulic push DROP None IN.

ELEVATION TOP OF HOLE 733.67' REF. OR DATUM Mean Sea Level

LOGGED BY JAC

SAMPLED BY JAC

DEPTH FEET	GRAPHIC LOG	PID READING (PPM)	TUBE SAMPLE NO.	BLOWS PER FOOT	EPA TEST METHOD PERFORMED	SOIL CLASS. (U.S.C.S.)	GEOTECHNICAL DESCRIPTION
120						SM	GRAVELLY SAND: tan, cohesionless, poorly sorted, fine- to coarse-grained sand and gravel, no odor, occasional pebbles, primarily coarse-grained (ALLUVIUM) @ 123.0' - cobbles and pebbles more abundant
		0	6	cuttings			
125						GM	SANDY GRAVEL: - tan, cohesionless, poorly sorted, fine- to very coarse-grained sand and gravel, gravel averages 0.3" in diameter, angular to subangular, granitic @ 128.0' - gravel, kelly bouncing steadily @ 129.0' - incomplete sample recovery, driller's sampler bent, sampling took 2¼ hrs.
		0	7	incomplete			
130						SM	GRAVELLY SAND: tan, cohesionless, poorly sorted, very fine- to very coarse-grained sand with common gravel to 0.25" in diameter
135							
140							
		0	8	cuttings			@ 142.0' - as above, occasional cobbles @ 143.0' - very hard, approx. 1' boulders
145							
150							

REVIEWED BY: REGISTERED GEOLOGIST FRANK J. KENTON NO. EG 1154 CERTIFIED ENGINEERING GEOLOGIST STATE OF CALIFORNIA

505A(11/77)

GEOTECHNICAL BORING LOG

DATE 4/24/87 & 4/27/87 DRILL HOLE NO. W-1 SHEET 6 OF 16

PROJECT Bendix/North Hollywood PROJECT NO. 3831136-07

DRILLING CO. Harold Council Drilling TYPE OF RIG Direct Rotary

HOLE DIAMETER 12 1/4" DRIVE WEIGHT 400# hydraulic push DROP None IN.

ELEVATION TOP OF HOLE 733.67' REF. OR DATUM Mean Sea Level

DEPTH FEET	GRAPHIC LOG	PID READING (PPM)	TUBE SAMPLE NO.	BLOWS PER FOOT	EPA TEST METHOD PERFORMED	SOIL CLASS. (U.S.C.S.)	GEOTECHNICAL DESCRIPTION LOGGED BY JAC SAMPLED BY JAC
150						SM	GRAVELLY SAND: tan, cohesionless, poorly sorted, very fine- to very coarse-grained sand with common gravel to 0.25" in diameter (ALLUVIUM)
155							@ 155.0' - losing mud into the formation @ 158.0' - as above @ 159.0' - end of drilling 4/24/87 4/27/87 - resumed drilling
160							
165						SM	SAND: tan, cohesionless, poorly sorted, fine- to very coarse-grained, no odor, minor gravel, no contamination detected
170							@ 170.0' - tested mud - no contamination detected with PID
175						SM	GRAVELLY SAND: as above, gravel to 1" in diameter @ 177.0' - very smooth, fast drilling
180							

REVIEWED BY: REGISTERED GEOLOGIST FRANK J. KENION NO. EG 1254 CERTIFIED ENGINEERING GEOLOGIST STATE OF CALIFORNIA

GEOTECHNICAL BORING LOG

DATE 4/27/87 DRILL HOLE NO. W-1 SHEET 7 OF 16

PROJECT Bendix/North Hollywood PROJECT NO. 3831136-07

DRILLING CO. Harold Council Drilling TYPE OF RIG Direct Rotary

HOLE DIAMETER 12 1/4" DRIVE WEIGHT 400# hydraulic push DROP None IN.

ELEVATION TOP OF HOLE 733.67' REF. OR DATUM Mean Sea Level

LOGGED BY JAC

SAMPLED BY JAC

DEPTH FEET	GRAPHIC LOG	PID READING (PPM)	TUBE SAMPLE NO.	BLOWS PER FOOT	EPA TEST METHOD PERFORMED	SOIL CLASS. (U.S.C.S.)	GEOTECHNICAL DESCRIPTION
180						SM	GRAVELLY SAND: tan, cohesionless, poorly sorted, very fine- to very coarse-grained sand with common gravel to 0.25" in diameter (ALLUVIUM)
185		0	12	cuttings			@ 186.0' - sudden rough drilling, kelly bouncing @ 187.0' - smooth drilling again
						SM	SAND: tan, cohesionless, poorly sorted, very fine- to coarse-grained, occasional pebbles to 0.4"
190							@ 193.0' - some reddish-brown, plastic clay in cuttings with sand
195		0	13	cuttings			
						SC	CLAYEY SAND: sand as above but finer grained and with abundant clay, silty, moderately cohesive
200		0	14	cuttings			@ 201.0' - losing mud into formation, mud is thickening, drilling rate approx. 12'/hr.
205		0	15	cuttings			@ 206.0' - as above
210							

REVIEWED BY: REGISTERED GEOLOGIST FRANK J. KENTON NO. EG 1154 CERTIFIED ENGINEERING GEOLOGIST STATE OF CALIFORNIA

GEOTECHNICAL BORING LOG

DATE 4/27/87 DRILL HOLE NO. W-1 SHEET 8 OF 16

PROJECT Bendix/North Hollywood PROJECT NO. 3831136-07

DRILLING CO. Harold Council Drilling TYPE OF RIG Direct Rotary

HOLE DIAMETER 12 1/4" DRIVE WEIGHT 400# hydraulic push DROP None IN.

ELEVATION TOP OF HOLE 733.67' REF. OR DATUM Mean Sea Level

LOGGED BY JAC

SAMPLED BY JAC

DEPTH FEET	GRAPHIC LOG	PID READING (PPM)	TUBE SAMPLE NO.	BLOWS PER FOOT	EPA TEST METHOD PERFORMED	SOIL CLASS. (U.S.C.S.)	GEOTECHNICAL DESCRIPTION
210						SC	CLAYEY SAND: tan, moderately cohesive, poorly sorted, very fine- to medium-grained, abundant clay, silty, occasional pebbles to 0.4" (ALLUVIUM)
						SM	SAND: tan, cohesionless, poorly sorted, very fine- to coarse-grained, subangular to subrounded
215		0	16	cuttings			
						SC	CLAYEY SAND: as above
220		0	17	cuttings			
							@ 224.0' - occasional gravel to 0.25" in diameter
225							
230		0	18	cuttings			
							@ 230.0' - as above
235							@ 234.0' - drilling rate approx. 20'/hr.
		0	19				@ 237.0' - as above
240							

REVIEWED BY:

REGISTERED GEOLOGIST FRANK J. KEATON NO. EG 1254 CERTIFIED ENGINEERING GEOLOGIST STATE OF CALIFORNIA

505A(11/77)

LEIGHTON & ASSOCIATES

GEOTECHNICAL BORING LOG

DATE 4/27/87 & 4/28/87 DRILL HOLE NO. W-1 SHEET 9 OF 16

PROJECT Bendix/North Hollywood PROJECT NO. 3831136-07

DRILLING CO. Harold Council Drilling TYPE OF RIG Direct Rotary

HOLE DIAMETER 12 1/4" DRIVE WEIGHT 400# hydraulic push DROP None in.

ELEVATION TOP OF HOLE 733.67' REF. OR DATUM Mean Sea Level

LOGGED BY JAC

SAMPLED BY JAC

DEPTH FEET	GRAPHIC LOG	PID READING (PPM)	TUBE SAMPLE NO.	BLOWS PER FOOT	EPA TEST METHOD PERFORMED	SOIL CLASS. (U.S.C.S.)	GEOTECHNICAL DESCRIPTION
240						SC	CLAYEY SAND: tan, moderately cohesive, poorly sorted, very fine- to medium-grained, silty, abundant clay, minor gravel (ALLUVIUM)
245		0	20	cuttings			@ 246.0' - as above, fewer fines, primarily medium- to coarse-grained sand with some clay @ 249.0' - end of drilling for 4/27/87 4/28/87 - began drilling; hole took approx. 600 gallons of new mud @ 252.0' - clayier
250							
255		0	21	cuttings		CL	SANDY CLAY: reddish-brown to brown, plastic, with fine- to medium-grained sand and silt
260		0	22	cuttings		SC	CLAYEY SAND: as above @ 261.0' - pebbles @ 263.0' - very hard
265							
270							

REVIEWED BY

REGISTERED GEOLOGIST FRANK J. KENTON NO. [illegible] CERTIFIED ENGINEERING GEOLOGIST STATE OF CALIFORNIA

GEOTECHNICAL BORING LOG

DATE 4/28/87 DRILL HOLE NO. W-1 SHEET 10 OF 16

PROJECT Bendix/North Hollywood PROJECT NO. 3831136-07

DRILLING CO. Harold Council Drilling TYPE OF RIG Direct Rotary

HOLE DIAMETER 12 1/4" DRIVE WEIGHT 400# hydraulic push DROP None IN.

ELEVATION TOP OF HOLE 733.67' REF. OR DATUM Mean Sea Level

LOGGED BY JAC

SAMPLED BY JAC

DEPTH FEET	GRAPHIC LOG	PID READING (PPM)	TUBE SAMPLE NO.	BLOWS PER FOOT	EPA TEST METHOD PERFORMED	SOIL CLASS. (U.S.C.S.)	GEOTECHNICAL DESCRIPTION
270		0	23	cuttings		SC	CLAYEY SAND: tan, moderately cohesive, very fine- to coarse-grained, occasional pebbles to 0.4", sub-rounded, granitic, clayey, primarily fine-grained sand and silt, drilling mud saturated with fine sand (ALLUVIUM)
							@ 270.0'- drilling mud saturated with fine sand
275							@ 278.0' - less clay
280							
		0	24	cuttings			@ 283.0' - as above
285							
290		0	25	cuttings			@ 291.0' - as above @ 292.0' - drilling rate 17'/hr. @ 293.0' - pebbles (a few) @ 294.0' - clayier
295						CL	SANDY CLAY: reddish-brown to brown, plastic, with fine- to medium-grained sand, silty
		REVIEWED BY					
300		0	26	cuttings		CL	CLAY: brown to reddish-brown, plastic, very little fine sand

REGISTERED GEOLOGIST FRANK J. KENTON NO. 2041 CERTIFIED ENGINEERING GEOLOGIST STATE OF CALIFORNIA

505A(11/77)

GEOTECHNICAL BORING LOG

DATE 4/28/87 & 4/29/87 DRILL HOLE NO. W-1 SHEET 11 OF 16

PROJECT Bendix/North Hollywood PROJECT NO. 3831136-07

DRILLING CO. Harold Council Drilling TYPE OF RIG Direct Rotary

HOLE DIAMETER 12 1/4" DRIVE WEIGHT 400# hydraulic push DROP None IN.

ELEVATION TOP OF HOLE 733.67' REF. OR DATUM Mean Sea Level

LOGGED BY JAC

SAMPLED BY JAC

DEPTH FEET	GRAPHIC LOG	PID READING (PPM)	TUBE SAMPLE NO.	BLOWS PER FOOT	EPA TEST METHOD PERFORMED	SOIL CLASS. (U.S.C.S.)	GEOTECHNICAL DESCRIPTION
300						CL	CLAY: brown to reddish-brown, cohesive, plastic clay, with minor gravel and very fine-grained sand and silt (ALLUVIUM)
						SC	CLAYEY SAND: tan to brown, moderately cohesive, clayey, primarily very fine- to fine-grained with some coarse grained sand, silty, minor gravel
305		0	27	cuttings			
310							@ 309.0' - end of drilling for 4/28/87 4/29/87 - began drilling; mud level down 60 ft., no caving, thinned out mud to remove sand.
							@ 314.0' - minor gravel
315							@ 318.0' - as above
		0	28	cuttings			
320							
							@ 323.0' - minor gravel
325		0	29	cuttings			@ 326.0' - as above, less clay
330							

REVIEWED BY

REGISTERED GEOLOGIST FRANK J. KENTON NO. EG 1254 CERTIFIED ENGINEERING GEOLOGIST STATE OF CALIFORNIA

505A(11/77)

HTOM & ASSOCIATES

GEOTECHNICAL BORING LOG

DATE 4/29/87 DRILL HOLE NO. W-1 SHEET 12 OF 16

PROJECT Bendix/North Hollywood PROJECT NO. 3831136-07

DRILLING CO. Harold Council Drilling TYPE OF RIG Direct Rotary

HOLE DIAMETER 12 1/4" DRIVE WEIGHT 400# hydraulic push DROP None IN.

ELEVATION TOP OF HOLE 733.67' REF. OR DATUM Mean Sea Level

DEPTH FEET	GRAPHIC LOG	PID READING (PPM)	TUBE SAMPLE NO.	BLOWS PER FOOT	EPA TEST METHOD PERFORMED	SOIL CLASS. (U.S.C.S.)	GEOTECHNICAL DESCRIPTION LOGGED BY JAC SAMPLED BY JAC
330						SC	CLAYEY SAND: tan to brown, moderately cohesive, clayey, very fine- to fine-grained sand with occasional coarse-grained sand, silty, minor gravel (ALLUVIUM) @ 331.0' - pebbles, drilling rate approx. 22'/hr., mud thickening, incorporating formation clay
335		0	30	cuttings			
							@ 336.0' - as above
340							@ 341.0' - pebbles @ 343.0' - relatively smooth drilling, but slower @ 344.0' - rocky (small pebbles)
345		0	31	cuttings			@ 346.0' - as above
350							@ 353.0' - rocky
355		0	32	cuttings			@ 357.0' - as above @ 358.0' - pebbles; haven't had to add any water to the mud during drilling - formation water
360							

REVIEWED BY: [signature]

REGISTERED GEOLOGIST FRANK J. KENTON NO. EG 1234 CERTIFIED ENGINEERING GEOLOGIST STATE OF CALIFORNIA

GEOTECHNICAL BORING LOG

DATE 4/29/87 DRILL HOLE NO. W-1 SHEET 13 OF 16

PROJECT Bendix/North Hollywood PROJECT NO. 3831136-07

DRILLING CO. Harold Council Drilling TYPE OF RIG Direct Rotary

HOLE DIAMETER 12 1/4" DRIVE WEIGHT 400# hydraulic push DROP None IN.

ELEVATION TOP OF HOLE 733.67' REF. OR DATUM Mean Sea Level

LOGGED BY JAC

SAMPLED BY JAC

Depth Feet	Graphic Log	PID Reading (PPM)	Tube Sample No.	Blows Per Foot	EPA Test Method Performed	Soil Class. (U.S.C.S.)	Geotechnical Description
360						SC	CLAYEY SAND: tan to brown, moderately cohesive, clayey, very fine- to fine-grained sand, occasionally coarse-grained, silty, with minor gravel (ALLUVIUM)
							@ 361.0' - small pebbles
		0	33	cuttings			
365							@ 366.0' - rocky
							@ 368.0' - pebbles
370						SM	SAND: tan, cohesionless, primarily fine-grained with some medium- and coarse-grained, slightly clayey, silty, little to no gravel
375		0	34	cuttings			
380							@ 383.0' - rocky
385		0		cuttings			@ 385.0' - as above
							@ 386.0' - pebbles
							@ 387.0' - very hard drilling (pebbles-cobbles)
							@ 389.0' - Easier drilling, approx. 15'/hr.
390							

REVIEWED BY

REGISTERED GEOLOGIST FRANK J. KENTON NO. EG 1254 CERTIFIED ENGINEERING GEOLOGIST STATE OF CALIFORNIA

505A(11/77)

LEIGHTON & ASSOCIATES

GEOTECHNICAL BORING LOG

DATE 4/29/87 DRILL HOLE NO. W-1 SHEET 14 OF 16

PROJECT Bendix/North Hollywood PROJECT NO. 3831136-07

DRILLING CO. Harold Council Drilling TYPE OF RIG Direct Rotary

HOLE DIAMETER 12 1/4" DRIVE WEIGHT 400# hydraulic push DROP None IN.

ELEVATION TOP OF HOLE 733.67' REF. OR DATUM Mean Sea Level

LOGGED BY JAC

SAMPLED BY JAC

DEPTH FEET	GRAPHIC LOG	PID READING (PPM)	TUBE SAMPLE NO.	BLOWS PER FOOT	EPA TEST METHOD PERFORMED	SOIL CLASS. (U.S.C.S.)	GEOTECHNICAL DESCRIPTION
390						SM	SAND: tan, cohesionless, primarily fine-grained with some medium- and coarse-grained sand, slightly clayey, silty, little to no gravel (ALLUVIUM)
395		0	36	cuttings			@ 396.0' - as above
400							@ 401.0' - pebbles
405							
410							@ 410.0' - drilling rate 20'/hr.
		0	37	cuttings			@ 413.0' - sand is coarser, some very coarse-grained
415							@ 418.0' - a few pebbles
420							

REVIEWED BY:

REGISTERED GEOLOGIST FRANK J. KENTON NO. EG 1254 CERTIFIED ENGINEERING GEOLOGIST STATE OF CALIFORNIA

GEOTECHNICAL BORING LOG

DATE 4/29/87 DRILL HOLE NO. W-1 SHEET 15 OF 16

PROJECT Bendix/North Hollywood PROJECT NO. 3831136-07

DRILLING CO. Harold Council Drilling TYPE OF RIG Direct Rotary

HOLE DIAMETER 12 1/4" DRIVE WEIGHT 400# hydraulic push DROP None IN.

ELEVATION TOP OF HOLE 733.67' REF. OR DATUM Mean Sea Level

LOGGED BY JAC

SAMPLED BY JAC

DEPTH FEET	GRAPHIC LOG	PID READING (PPM)	TUBE SAMPLE NO.	BLOWS PER FOOT	EPA TEST METHOD PERFORMED	SOIL CLASS. (U.S.C.S.)	GEOTECHNICAL DESCRIPTION
420		0	38	cuttings		SM	SAND: tan, cohesionless, poorly sorted, very fine- to very coarse-grained, silty (ALLUVIUM)
425							
430		0	39	cuttings			@ 431.0' - as above, minor pebbles
435							
440		0	40	cuttings			@ 441.0' - as above
445							
450		0	41	cuttings			

REVIEWED BY

REGISTERED GEOLOGIST FRANK KENTON NO. RG 1254 CERTIFIED ENGINEERING GEOLOGIST STATE OF CALIFORNIA

505A(11/77)

GEOTECHNICAL BORING·LOG

DATE 4/29/87 DRILL HOLE NO. W-1 SHEET 16 OF 16

PROJECT Bendix/North Hollywood PROJECT NO. 3831136-07

DRILLING CO. Harold Council Drilling TYPE OF RIG Direct Rotary

HOLE DIAMETER _____ DRIVE WEIGHT 400# hydraulic push DROP None IN.

ELEVATION TOP OF HOLE 736' REF. OR DATUM Mean Sea Level

DEPTH FEET	GRAPHIC LOG	PID READING (PPM)	TUBE SAMPLE NO.	BLOWS PER FOOT	EPA TEST METHOD PERFORMED	SOIL CLASS. (U.S.C.S.)	GEOTECHNICAL DESCRIPTION
450						SM	SAND: tan, cohesionless, poorly sorted, very fine- to very coarse-grained, slightly clayey, silty (ALLUVIUM)

LOGGED BY JAC

SAMPLED BY JAC

REVIEWED BY: REGISTERED GEOLOGIST FRANK J. KENTON NO. EG 1254 CERTIFIED ENGINEERING GEOLOGIST STATE OF CALIFORNIA

NOTES: Total Depth - 451'
Caving in upper 100'
@ 0-105' - boring initially drilled to 8 3/4" in diameter to accommodate geophysical logging. Following logging, boring reamed to 17½" prior to installation of conductor casing.
@ 105.0' - boring drilled to 12¼" in diameter
Free water encountered @ 204'
Drilling fluid: NL Baroid Aquagel Goldseal bentonite mud (sodium montmorillonite), no additives

21

[CONFORMED]

RESTATED
CERTIFICATE OF INCORPORATION
OF
ALLIED-SIGNAL INC.

As filed with the Secretary of State
of the State of Delaware
on April 27, 1987

041007

RESTATED CERTIFICATE OF INCORPORATION
OF
ALLIED-SIGNAL INC.

Allied-Signal Inc., which was originally incorporated in the State of Delaware on May 13, 1985 under the name of East/West Newco Corporation, hereby certifies that this Restated Certificate of Incorporation was duly adopted in accordance with the provisions of Section 245 of the General Corporation Law of the State of Delaware, this Restated Certificate of Incorporation only restates and integrates and does not further amend the provisions of the corporation's certificate of incorporation as theretofore amended, and there is no discrepancy between those provisions and the provisions of this Restated Certificate of Incorporation. The text of the Restated Certificate of Incorporation as heretofore amended is hereby restated to read in its entirety as follows:

FIRST: The name of the corporation is Allied-Signal Inc.

SECOND: The address of the registered office of the corporation in the State of Delaware is 1209 Orange Street, in the City of Wilmington, County of New Castle. The name of its registered agent at that address is The Corporation Trust Company.

THIRD: The purpose of the corporation is to engage in any lawful act or activity for which a corporation may be organized under the General Corporation Law of the State of Delaware as set forth in Title 8 of the Delaware Code.

FOURTH: The total number of shares of stock which the corporation shall have authority to issue is 520,000,000 shares of which 500,000,000 shares shall be Common Stock, par value $1.00 per share ("Common Shares"), and 20,000,000 shares shall be Preferred Stock, without par value ("Preferred Stock").

I. Series A Preferred Shares, Series C Preferred Shares, Series D Preferred Shares, Series F Preferred Shares, and Series G Preferred Shares

The designations and the powers, preferences and rights, and the qualifications, limitations or restrictions thereof for the Series A Preferred Shares, the Series C Preferred Shares, the Series D Preferred Shares, the Series F Preferred Shares and the Series G Preferred Shares are as follows (certain capitalized terms being herein used as defined in Clause I.(14) below):

(1) *Number of shares.* 51,250 shares of the Preferred Stock shall be Series A Preferred Shares, 3,593,281 shares of the Preferred Stock shall be Series C Preferred Shares, 984,089 shares of the Preferred Stock shall be Series D Preferred Shares, 2,755,173 shares of the Preferred Stock shall be Series F Preferred Shares, and 24,929 shares of the Preferred Stock shall be Series G Preferred Shares.

(2) *Designation of Shares.* The Series A Preferred Shares shall be designated as the $91.25 Series A Cumulative Preferred Shares ("Series A Shares"), without par value, of the corporation, the Series C Preferred Shares shall be designated as the $6.74 Series C Cumulative Convertible Preferred Shares ("Series C Shares"), without par value, of the corporation, the Series D Preferred Shares shall be designated as the $12 Series D Cumulative Convertible Preferred Shares ("Series D Shares"), without par value, of the corporation, the Series F Preferred Shares shall be designated as the Adjustable Rate Series F Cumulative Preferred Shares ("Series F Shares"), without par value, of the corporation, and the Series G Preferred Shares shall be designated as the $86.25 Series G Cumulative Preferred Shares ("Series G Shares"), without par value, of the corporation.

(3) *Dividends.* The dividend rate on the Series A Shares shall be $91.25 per share per annum, the dividend rate on the Series C Shares shall be $1.685 per share for the quarterly payment due on November 15, 1985, and the dividend rate on the Series C Shares shall thereafter be $6.74 per share per annum, the dividend rate on the Series D Shares shall be $3 per share for the quarterly payment due on December 1, 1985, and the dividend rate on the Series D Shares shall thereafter be $12 per share per annum, the dividend rate per share on the Series F Shares shall be computed for each dividend period by multiplying $100 by the Applicable Rate for such period and dividing the result by four; provided, however, that the amount of dividends payable for any period shorter

unpaid dividends on the Series A Shares, the Series C Shares, the Series D Shares, the Series F Shares, the Series G Shares and such Parity Shares, respectively, bear to each other.

(4) *Optional Redemptions.* A. Subject to the restrictions in Clause I.(3) above and Clauses I.(6) and I.(8) below, the Series A Shares shall be redeemable at the option of the corporation at any time, as a whole or from time to time in part, at the following redemption prices per share if redeemed during the 12-month period ending July 15,

Year	Redemption Price	Year	Redemption Price
1986	$1,062.43	1993	$1,028.82
1987	1,057.63	1994	1,024.01
1988	1,052.83	1995	1,019.21
1989	1,048.03	1996	1,014.41
1990	1,043.22	1997	1,009.61
1991	1,038.42	1998	1,004.80
1992	1,033.62		

and at $1,000 per share if redeemed at any time after July 15, 1998, plus, in each case, an amount equal to the dividends accrued and unpaid thereon to the redemption date.

B. Subject to the restrictions in Clause I.(3) above and Clause I.(6) below, the Series C Shares shall be redeemable at the option of the corporation at any time after August 14, 1986, as a whole or from time to time in part, at the following redemption prices per share if redeemed during the 12-month period ending August 15,

Year	Redemption Price
1987	$57.00
1988	56.50
1989	56.00
1990	55.50

and at $55 per share if redeemed at any time after August 15, 1990, plus, in each case, an amount equal to the dividends accrued and unpaid thereon to the redemption date.

C. Subject to the restrictions in Clause I.(3) above and Clause I.(6) below, the Series D Shares shall be redeemable at the option of the corporation at any time after October 27, 1986, as a whole or from time to time in part, at $100 per share, plus, in each case, an amount equal to the dividends accrued and unpaid thereon to the redemption date.

D. Subject to the restrictions in Clause I.(3) above and Clause I.(6) below, the Series F Shares shall be redeemable at the option of the corporation at any time after January 31, 1986, as a whole or from time to time in part, at $100 per share, plus, in each case, an amount equal to the dividends accrued and unpaid thereon to the redemption date.

E. Subject to the restrictions in Clause I.(3) above and Clauses I.(6) and I.(8) below, the Series G Shares shall be redeemable at the option of the corporation at any time, as a whole or from time to time in part, at the following redemption prices per share if redeemed during the 12-month period ending July 15,

Year	Redemption Price
1986	$1,028.75
1987	1,019.17
1988	1,009.58

and at $1,000 per share if redeemed after July 15, 1988, plus, in each case, an amount equal to the dividends accrued and unpaid thereon to the redemption date.

(5) *Required Redemptions.* A. Subject to the restrictions in Clause I.(3) above, as a sinking fund for the retirement of Series A Shares, but only to the extent of assets of the corporation

on the principal national securities exchange on which the Common Shares are listed or admitted to trading, or if the Common Shares are not listed or admitted to trading on any national securities exchange, the average of the highest reported bid and lowest reported asked prices as furnished by the National Association of Securities Dealers, Inc. through NASDAQ or a similar organization if NASDAQ is no longer reporting such information. If on any such date the Common Shares are not quoted by any such organization, the fair value of such Common Shares on such date, as determined by the Board of Directors, shall be used.

(6) *Provisions Applicable to Redemptions*. Not less than thirty (30) nor more than sixty (60) days prior to the date fixed for any redemption of Series A Shares, Series C Shares, Series D Shares, Series F Shares or Series G Shares pursuant to Clause I.(4) above or Clause I.(7) below, a notice specifying the time and place of such redemption and the number of shares to be redeemed shall be given by first class mail, postage prepaid, to the holders of record of the Series A Shares, Series C Shares, Series D Shares, Series F Shares or Series G Shares to be redeemed at their respective addresses as the same shall appear on the books of the corporation, but no failure to mail such notice or any defect therein or in the mailing thereof shall affect the validity of the proceedings for redemption. Any notice which was mailed in the manner herein provided shall be conclusively presumed to have been duly given whether or not the holder receives the notice.

Unless the corporation shall fail to pay, upon surrender of the certificates evidencing the shares to be redeemed, the redemption price of any Series A Shares, Series C Shares, Series D Shares, Series F Shares or Series G Shares called for redemption as provided herein, from and after the date fixed for the redemption of such Series A Shares, Series C Shares, Series D Shares, Series F Shares or Series G Shares by the corporation, dividends shall cease to accrue on the Series A Shares, Series C Shares, Series D Shares, Series F Shares or Series G Shares to be redeemed and the holders of such shares shall cease to be stockholders with respect to such shares and shall have no interest in or claims against the corporation by virtue thereof and shall have no voting or other rights, including, in the case of the Series C Shares and Series D Shares, the right to convert such shares into Common Shares pursuant to Clause I.(11) below, with respect to such shares, except the right to receive the moneys payable upon such redemption from the corporation, without interest thereon, upon surrender (and endorsement, if required by the corporation) of their certificates, and the shares evidenced thereby shall no longer be deemed to be outstanding.

The obligations of the corporation to make sinking fund retirements of Series A Shares, Series C Shares, Series D Shares and Series G Shares annually, pursuant to Clause I.(5) above, shall be cumulative and, if at any time any sinking fund retirement required by Clause I.(5) above shall be in arrears, the corporation shall not (i) declare or pay any dividend on the Common Shares or on any Junior Shares or make any payment on account of, or set apart money for a sinking or other analogous fund for, the purchase, redemption or other retirement of any Common Shares or any Junior Shares or make any distribution in respect thereof, either directly or indirectly and whether in cash or property or in obligations or shares of the corporation (other than in Common Shares or Junior Shares), (ii) purchase any Senior Shares, Series A Shares, Series C Shares, Series D Shares, Series F Shares, Series G Shares or Parity Shares or redeem any such shares except for required sinking fund retirements pursuant to Clause I.(5) above or required sinking fund retirements under the provisions of this Certificate of Incorporation applicable to Parity Shares or Senior Shares, or (iii) permit any corporation or other entity directly or indirectly controlled by the corporation to purchase any Common Shares, Junior Shares, Series A Shares, Series C Shares, Series D Shares, Series F Shares, Series G Shares, Parity Shares or Senior Shares, *provided* that so long as any such required sinking fund retirement with respect to the Series A Shares, Series C Shares, Series D Shares, Series G Shares or any Parity Shares shall be in arrears, all payments on account of such required sinking fund retirements shall be made pro rata with respect to all Series A Shares, Series C Shares, Series D Shares, Series G Shares and Parity Shares then outstanding, so that the amount of such payments shall in all cases bear to each other the same ratio that the respective amounts which would be necessary to discharge in full all such required sinking fund retirements in arrears bear to each other.

B. The liquidation price of the Series G Shares in case of the voluntary liquidation, dissolution or winding up of the corporation shall be an amount equal to the redemption price per share specified in Clause I.(4)E above applicable on the date of such voluntary liquidation, dissolution or winding up, plus, in each case, an amount equal to the dividends accrued and unpaid thereon to the payment date.

C. The liquidation price of the Series A Shares and the Series G Shares in case of the involuntary liquidation, dissolution or winding up of the corporation, shall be $1,000 per share, plus an amount equal to the dividends accrued and unpaid thereon to the payment date.

D. The liquidation price of the Series C Shares in case of the voluntary or involuntary liquidation, dissolution or winding up of the corporation shall be $55 per share, plus an amount equal to the dividends accrued and unpaid thereon to the payment date.

E. The liquidation price of the Series D Shares in case of the voluntary or involuntary liquidation, dissolution or winding up of the corporation shall be $100 per share, plus an amount equal to the dividends accrued and unpaid thereon to the payment date.

F. The liquidation price of the Series F Shares in case of the voluntary or involuntary liquidation, dissolution or winding up of the corporation shall be $100 per share, plus an amount equal to the dividends accrued and unpaid thereon to the payment date.

G. In the event of any voluntary or involuntary liquidation, dissolution or winding up of the corporation, the holders of the Series A Shares, the holders of the Series C Shares, the holders of the Series D Shares, the holders of the Series F Shares and the holders of the Series G Shares (i) shall not be entitled to receive the liquidation price of such shares held by them until the liquidation price of all Senior Shares shall have been paid in full and (ii) shall be entitled to receive the liquidation price of such shares held by them in preference to and in priority over any distributions upon the Common Shares and all Junior Shares. If the assets of the corporation are not sufficient to pay in full the liquidation price payable to the holders of the Series A Shares, the holders of the Series C Shares, the holders of the Series D Shares, the holders of the Series F Shares, and the holders of the Series G Shares and the liquidation price payable to the holders of all Parity Shares, the holders of all such shares shall share ratably in such distribution of assets in accordance with the amounts which would be payable on such distribution if the amounts to which the holders of the Series A Shares, the holders of the Series C Shares, the holders of the Series D Shares, the holders of the Series F Shares, the holders of the Series G Shares and the holders of all Parity Shares are entitled were paid in full.

H. Neither a consolidation or merger of the corporation with or into any other corporation, nor a merger of any other corporation with or into the corporation, nor a sale or transfer of all or any part of the corporation's assets for cash or securities shall be considered a dissolution, liquidation or winding-up of this corporation within the meaning of this Clause I.(10).

(11) *Convertibility*. A. Neither the Series A Shares, the Series F Shares nor the Series G Shares shall be convertible into any other securities of the corporation.

B. The Series C Shares shall be convertible at any time at the option of the holders of the Series C Shares into Common Shares at a rate of 1.179 Common Shares for each Series C Share at the office of any duly appointed transfer agent for the Series C Shares, and at such other office or offices, if any, as the Board of Directors of the corporation may determine, and the Series D Shares shall be convertible at any time at the option of the holders of the Series D Shares into Common Shares at a rate of 2.0265 Common Shares for each Series D Share at the office of any duly appointed transfer agent for the Series D Shares and at such other office or offices, if any, as the Board of Directors of the corporation may determine; provided, however, that in case of the redemption of any Series C Shares or Series D Shares, such right of conversion shall cease and terminate, as to the shares called for redemption, at the close of business on the day next prior to the date fixed for redemption, unless default shall be made in the payment of the redemption price. Upon conversion, the corporation shall make no payment or adjustment on account of dividends accrued or in arrears on the Series C Shares or Series D Shares surrendered for conversion or on account of any dividends on the Common Shares issued on such conversion. Before any holder of

would then be in effect had the adjustments made upon the issuance of such rights or warrants been made upon the basis of delivery of only the number of Common Shares actually issued.

(c) In case the corporation shall distribute to all holders of Common Shares (including any such distribution made in connection with a consolidation or merger in which the corporation is the surviving corporation) evidences of its indebtedness or assets (other than cash dividends or distributions and dividends payable in Common Shares) or subscription rights or warrants (excluding those referred to in paragraph (b) of this Clause I.(11)B), the conversion rate shall be adjusted by multiplying the conversion rate in effect immediately prior to the record date for determination of shareholders entitled to receive such distribution by a fraction, of which the numerator shall be the current market price per Common Share (as defined in paragraph (d) of this Clause I.(11)B) on such record date and of which the denominator shall be such current market price per Common Share, less the fair market value (as determined by the Board of Directors, whose determination shall be conclusive) of the portion of the evidences of indebtedness or assets or subscription rights or warrants so to be distributed which are applicable to one Common Share. Such adjustment shall become effective at the close of business on such record date. If the corporation declares a cash dividend or distribution in an amount equal to or greater than 10% of the current market price per Common Share on the declaration date for such dividend or distribution, the corporation shall give at least 10 days prior written notice to all holders of record of Series C Shares and Series D Shares of the record date for determining those holders of Common Shares who will be entitled to receive such dividend or distribution.

(d) For the purpose of any computation under paragraphs (b) and (c) of this Clause I.(11)B, the current market price per Common Share on any record date shall be deemed to be the average of the daily closing prices for the 30 consecutive trading days on the New York Stock Exchange composite tape commencing 45 trading days before such date. The closing price of each day shall be the last sale price regular way or, in case no such sale takes place on such day, the average of the closing bid and asked prices regular way, in either case, on the New York Stock Exchange composite tape or, if the Common Shares are not listed or admitted to trading on such exchange, on the principal national securities exchange on which the Common Shares are listed or admitted to trading, or if the Common Shares are not listed or admitted to trading on any national securities exchange the average of the highest reported bid and lowest reported asked prices as furnished by the National Association of Securities Dealers, Inc. through NASDAQ or a similar organization if NASDAQ is no longer reporting such information. If on any such date the Common Shares are not quoted by any such organization, the fair value of such Common Shares on such date, as determined by the Board of Directors, shall be used.

(e) In case of any capital reorganization of the corporation, or of any reclassification of the Common Shares (other than a reclassification of the Common Shares referred to in paragraph (a) of this Clause I.(11)B), or in case of the consolidation of the corporation with or the merger of the corporation with or into any other corporation or of the sale of the properties and assets of the corporation as, or substantially as, an entirety to any other corporation, each Series C Share and Series D Share shall after such capital reorganization, reclassification of Common Shares, consolidation, merger or sale be convertible into the number of shares of stock or other securities, assets or cash to which a holder of the number of Common Shares receivable (at the time of such capital reorganization, reclassification of Common Shares, consolidation, merger or sale) upon conversion of such Series C Share or Series D Share would have been entitled to receive upon such capital reorganization, reclassification of Common Shares, consolidation, merger or sale, and in any such case, if necessary, the provisions set forth in this Clause I.(11)B with respect to the rights and interests thereafter of the holders of the Series C Shares and Series D Shares shall be appropriately adjusted so as to be applicable, as nearly as may reasonably be, to any shares of stock or other securities, assets or cash thereafter deliverable on the conversion of the Series C Shares and Series D Shares. The subdivision or combination of Common Shares at any time outstanding into a greater or lesser number of shares shall not be deemed to be a reclassification of the

such sale takes place on such day, the average of the high bid and low asked prices regular way in either case on the New York Stock Exchange composite tape or, if the Common Shares are not listed or admitted to trading on such exchange, on the principal national securities exchange on which the Common Shares are listed or admitted to trading, or if the Common Shares are not listed or admitted to trading on any national securities exchange the average of the highest reported bid and lowest reported asked prices as furnished by the National Association of Securities Dealers, Inc. through NASDAQ or a similar organization if NASDAQ is no longer reporting such information. If on any such date the Common Shares are not quoted by any such organization, the fair value of such Common Shares on such date, as determined by the Board of Directors, shall be used.

(12) *Other Preference Shares.* So long as any Series A Shares, Series C Shares, Series D Shares, Series F Shares or Series G Shares remain outstanding, the corporation shall not issue any Preference Shares which are not Senior Shares, Parity Shares or Junior Shares. All series of Preferred Shares, whether or not the dividend rates, the dividend payment dates or the redemption or liquidation prices per share thereof differ from those of the Series A Shares, Series C Shares, Series D Shares, Series F Shares and Series G Shares, shall be on a parity with all Series A Shares, Series C Shares, Series D Shares, Series F Shares and Series G Shares at the time outstanding as to dividends or other payments and as to the distribution of assets on any voluntary or involuntary dissolution, liquidation or winding up of the corporation. All Series A Shares, Series C Shares, Series D Shares, Series F Shares and Series G Shares which are redeemed pursuant to any provision of this Article FOURTH shall be cancelled. No Preferred Shares which are issued, in addition to those designated in this Article FOURTH as of September 19, 1985 as Series A Shares, Series C Shares, Series D Shares, Series F Shares and Series G Shares shall be designated as Series A Shares, Series C Shares, Series D Shares, Series F Shares or Series G Shares.

(13) *Voting Rights.* Except as otherwise required by law, holders of Series A Shares, holders of Series F Shares and holders of Series G Shares shall have no voting rights; holders of Series C Shares and Series D Shares shall be entitled to vote on every question submitted to holders of record of the Common Shares, and shall be entitled to one vote for every Series C Share and one vote for every Series D Share standing in such holder's name on the books of the corporation, voting together with the Common Shares and Series AA Shares (as defined in Clause II.(1) herein) as a single class; *provided, however,* that:

A. *Dividend Defaults.* (1) If and whenever accrued dividends on the Series A Shares, the Series C Shares, the Series D Shares, the Series F Shares or the Series G Shares or any Preferred Shares of any other series shall not have been paid in an aggregate amount equal to or greater than six (6) quarter-annual dividends on the Series A Shares, the Series C Shares, the Series D Shares, the Series F Shares or the Series G Shares or such other Preferred Shares at the time outstanding (each such series being, in this Clause I.(13)A, called a "series in arrears"), then, and in any such event, the number of Directors then constituting the entire Board of Directors of the corporation shall automatically be increased by two Directors and the holders of the shares of all series in arrears, voting together as a single class, shall be entitled to fill such newly created directorships. Such right to vote as a single class to elect two Directors shall, when vested, continue until all dividends in default on the Series A Shares, the Series C Shares, the Series D Shares, the Series F Shares, the Series G Shares and such other Preferred Shares, as the case may be, shall have been paid in full and, when so paid, such right to elect two Directors separately as a class shall cease, subject, always, to the same provisions for the vesting of such right to elect two Directors separately as a class in the case of future dividend defaults. At any time when such right to elect two Directors separately as a class shall have so vested, the corporation may, and upon the written request of the holders of record of not less than 20% of the total number of shares of all series in arrears then outstanding shall, call a special meeting of the holders of such shares to fill such newly created directorships for the election of Directors. In the case of such a written request, such special meeting shall be held within ninety (90) days after the delivery of such request, and, in each case, at the place and upon the notice provided by law and in the By-laws of the corporation, *provided,* that the corporation shall not be required to call such a special meeting if such request is received less

C. *Voting.* Whenever the holders of the Preferred Shares are entitled to vote as a single class, each holder of Series A Shares or Series G Shares shall be entitled to one vote for each such share held of record and, to the extent permitted by applicable law, (1) each holder of shares of any other series of the Preferred Shares shall be entitled to one vote for each $1,000 of the liquidation price (without regard to accrued dividends) in respect of the involuntary liquidation, dissolution or winding up of the corporation of the shares of such series for each such share held of record and (2) in the case of any such shares such liquidation price of which shall not be an integral multiple of $1,000, including the Series C Shares, Series D Shares and Series F Shares, each holder thereof shall be entitled to a vote in respect of each such share so held equal to the result obtained by multiplying one by a fraction, the numerator of which is a number equal to the number of dollars constituting such liquidation price of such share and the denominator of which is 1,000.

(14) *Certain Definitions.* As used in this Article FOURTH, the following terms shall have the following respective meanings:

"Applicable Rate" shall mean, for any dividend period, the highest of the Treasury Bill Rate, the Ten Year Constant Maturity Rate and the Twenty Year Constant Maturity Rate for such dividend period less 15/100 of 1%; provided, however, that the Applicable Rate for any dividend period shall in no event be less than 8% per annum nor greater than 15% per annum. In the event that the Board of Directors of the corporation determines in good faith that for any reason:

(i) any one of the Treasury Bill Rate, the Ten Year Constant Maturity Rate and the Twenty Year Constant Maturity Rate cannot be determined for any dividend period, then the Applicable Rate for such dividend period shall be the higher of whichever two of such Rates can be so determined, less 15/100 of 1%;

(ii) only one of the Treasury Bill Rate, the Ten Year Constant Maturity Rate and the Twenty Year Constant Maturity Rate can be determined for any dividend period, then the Applicable Rate for such dividend period shall be whichever such Rate can be so determined, less 15/100 of 1%; or

(iii) none of the Treasury Bill Rate, the Ten Year Constant Maturity Rate and the Twenty Year Constant Maturity rate can be determined for any dividend period, then the Applicable Rate in effect for the preceding dividend period shall be continued for such dividend period.

"Calendar Period" shall mean a period of fourteen calendar days.

"Common Shares" shall mean the 500 million shares of Common Stock referred to in the first paragraph of this Article FOURTH.

"Consolidated Net Income" shall mean, for any period, the aggregate of the net income (or net deficit) for such period, before non-recurring items, of the corporation and its consolidated subsidiaries determined in accordance with generally accepted accounting principles. For the purposes hereof, there shall not be included in the net income of the corporation and such consolidated subsidiaries:

(i) any gain from any write-up of assets not in the ordinary course of business after December 31, 1978;

(ii) except for Allied Corporation and its subsidiaries as of September 18, 1985, earnings of a subsidiary accrued prior to the date it became a subsidiary;

(iii) earnings of any corporation, substantially all the assets of which have been acquired by the corporation or any of its subsidiaries in any manner, realized by such corporation prior to the date of such acquisition;

(iv) the earnings of any person to which assets of the corporation have been sold, transferred or disposed of, or into which the corporation shall have merged, prior to the date of such transaction;

Period), as published weekly during such Calendar Period by any Federal Reserve Bank or by any U.S. Government department or agency selected by the corporation;

(ii) if a per annum Ten Year Average Yield shall not be published by the Federal Reserve Board or by any Federal Reserve Bank or by any U.S. Government department or agency during such Calendar Period, then the Ten Year Constant Maturity Rate for such dividend period shall mean the arithmetic average of the two most recent weekly per annum average yields to maturity (or the one weekly average yield to maturity, if only one such yield shall be published during the relevant Calendar Period) for all of the actively traded marketable U.S. Treasury fixed interest rate securities (other than Special Securities) then having maturities of not less than 8 nor more than 12 years, as published during such Calendar Period by the Federal Reserve Board or, if the Federal Reserve Board shall not publish such yields, by any Federal Reserve Bank or by any U.S. Government department or agency selected by the corporation; and

(iii) if the corporation determines in good faith that for any reason the corporation cannot determine the Ten Year Constant Maturity Rate for any dividend period as provided above in this paragraph, then the Ten Year Constant Maturity Rate for such dividend period shall mean the arithmetic average of the per annum average yields to maturity based upon the closing bids during such Calendar Period for each of the issues of actively traded marketable U.S. Treasury fixed interest rate securities (other than Special Securities) with a final maturity date not less than 8 nor more than 12 years from the date of each such quotation, as chosen and quoted daily for each business day in New York City (or less frequently if daily quotations shall not be generally available) to the corporation by at least three recognized dealers in U.S. Government securities selected by the corporation.

In any event, the Ten Year Constant Maturity Rate shall be rounded to the nearest five hundredths of a percentage point.

"Treasury Bill Rate" shall mean, for each dividend period, the arithmetic average of the two most recent weekly per annum market discount rates (or the one weekly per annum market discount rate, if only one such rate shall be published during the relevant Calendar Period) for three-month U.S. Treasury bills, as published weekly by the Federal Reserve Board during the Calendar Period immediately prior to the last ten calendar days of March, June, September or December, as the case may be, prior to the dividend period for which the dividend rate on the Series F Shares is being determined. Notwithstanding the foregoing:

(i) if the Federal Reserve Board does not publish such a weekly per annum market discount rate during any such Calendar Period, then the Treasury Bill Rate for such dividend period shall mean the arithmetic average of the two most recent weekly per annum market discount rates (or the one weekly per annum market discount rate, if only one such rate shall be published during the relevant Calendar Period) for three-month U.S. Treasury bills, as published weekly during such Calendar Period by any Federal Reserve Bank or by any U.S. Government department or agency selected by the corporation;

(ii) if a per annum market discount rate for three-month U.S. Treasury bills shall not be published by the Federal Reserve Board or by any Federal Reserve Bank or by any U.S. Government department or agency during such Calendar Period, then the Treasury Bill Rate for such dividend period shall mean the arithmetic average of the two most recent weekly per annum market discount rates (or the one weekly per annum market discount rate, if only one such rate shall be published during the relevant Calendar Period) for all of the U.S. Treasury bills then having maturities of not less than 80 nor more than 100 days, as published during such Calendar Period by the Federal Reserve Board or, if the Federal Reserve Board shall not publish such rates, by any Federal Reserve Bank or by any U.S. Governmental department or agency selected by the corporation;

provided above in this paragraph, then the Twenty Year Constant Maturity Rate for such dividend period shall mean the arithmetic average of the per annum average yields to maturity based upon the closing bids during such Calendar Period for each of the issues of actively traded marketable U.S. Treasury fixed interest rate securities (other than Special Securities) with a final maturity date not less than 18 nor more than 22 years from the date of each such quotation, as chosen and quoted daily for each business day in New York City (or less frequently if daily quotations shall not be generally available) to the corporation by at least three recognized dealers in U.S. Government securities selected by the corporation.

In any event, the Twenty Year Constant Maturity Rate shall be rounded to the nearest five hundredths of a percentage point.

II. Series AA Preferred Shares

The designations and the powers, preferences and rights, and the qualifications, limitations or restrictions thereof for the Series AA Shares are as follows (certain capitalized terms being herein used as defined in Clause I.(14) above):

(1) *Designation and Number of Shares.* The series established hereby shall consist of 968,754 shares of the 8.25% Series AA Cumulative Convertible Preferred Shares, without par value (the "Series AA Shares").

(2) *Dividend Rights and Restrictions.*

A. The dividend rate on the Series AA Shares shall be $1.03125 per share for the quarterly payment due on October 30, 1985, and the dividend rate on the Series AA Shares shall thereafter be $4.125 per share per annum. Dividends on the Series AA Shares shall be fully cumulative and shall accrue, without interest, from September 19, 1985 and shall be payable in equal quarterly installments on the thirtieth day of January, April, July and October in each year, commencing on October 30, 1985. Such dividends shall accrue whether or not there shall be net profits or net assets of the corporation legally available for payment of such dividends. Accumulations of dividends on the Series AA Shares shall not bear interest.

B. If at any time the corporation has failed to pay accrued dividends on any Series AA Shares or any Parity Shares at the time outstanding at the times such dividends are payable, the corporation shall not (i) declare or pay any dividend on the Common Shares or on any Junior Shares or make any payment on account of, or set apart money for a sinking or other analogous fund for, the purchase, redemption or other retirement of, any Common Shares or any Junior Shares or make any distribution in respect thereof, either directly or indirectly and whether in cash or property or in obligations or shares of the corporation (other than in Common Shares or Junior Shares), (ii) purchase any Series AA Shares or Parity Shares or redeem (by way of sinking fund retirement pursuant to Clause I.(5) above or otherwise) fewer than all of the Series AA Shares and Parity Shares then outstanding, or (iii) permit any corporation or other entity directly or indirectly controlled by the corporation to purchase any Senior Shares, Common Shares, Junior Shares, Series AA Shares or Parity Shares.

C. Upon conversion of any Series AA Shares, the holders thereof shall not be entitled to receive any accumulated, accrued or unpaid dividends in respect of such Series AA Shares, *provided* that such holders shall be entitled to receive any dividends on such Series AA Shares paid or declared prior to such conversion if such holder held such Series AA Shares on the record date for the payment of such dividend.

(3) *Liquidation Rights.*

A. Upon the voluntary or involuntary dissolution, liquidation or winding-up of the corporation, the holders of the Series AA Shares then outstanding shall be entitled to receive, with respect to each such share held by such holder, out of the assets of the corporation (whether representing capital or surplus), subject to the rights of the holders of any Senior Shares, but before any such distribution shall be made on any Common Shares or Junior Shares, $50 in cash,

D. Unless the corporation shall fail to pay, upon surrender of the certificates evidencing the shares to be redeemed, the redemption price of any Series AA Shares called for redemption as provided herein, then, subject to the provisions of Clause II.(6)D, on and after the redemption date (i) the shares represented thereby shall not be deemed outstanding, (ii) the right to receive dividends thereon shall cease to accrue and (iii) all rights of holders of such shares shall cease and terminate, excepting only the right to receive the redemption price therefor, plus accrued and unpaid dividends as provided in Clause II.(4)A, but without interest. Any moneys so available for payment by the corporation and unclaimed at the end of one year from the redemption date shall revert to the general funds of the corporation after which reversion the holders of such shares shall (subject to applicable escheat laws) look only to the general funds of the corporation for payment of the redemption price.

E. In the case of each partial redemption of Series AA Shares, the shares to be redeemed shall be determined by the corporation either by lot or on a pro rata basis as prescribed by the Board of Directors or the Executive Committee.

F. In order to facilitate the redemption of any shares of Series AA Shares, the Board of Directors is authorized to cause the transfer books of the corporation to be closed as to such shares no later than 10 days prior to such redemption.

G. If at any time any sinking fund retirement required by Clause I.(5) above shall be in arrears, the corporation shall not (i) purchase any Senior Shares, Series AA Shares or Parity Shares or redeem any such shares except for required sinking fund retirements pursuant to Clause I.(5) above or required sinking fund retirements under the provisions of this Certificate of Incorporation applicable to Parity Shares or Senior Shares, or (ii) permit any corporation or other entity directly or indirectly controlled by the corporation to purchase any Common Shares, Junior Shares, Series AA Shares, Parity Shares or Senior Shares.

(5) *Voting Rights*. Except as otherwise required by law, holders of Series AA Shares shall be entitled to vote on every question submitted to holders of record of the Common Shares, and shall be entitled to one vote for every Series AA Share standing in such holder's name on the books of the corporation, voting together with the Common Shares, Series C Shares and Series D Shares as a single class; *provided, however,* that:

A. *Dividend Defaults*. (1) If and whenever accrued dividends on the Series AA Shares or any Preferred Shares of any other series shall not have been paid in an aggregate amount equal to or greater than six (6) quarter-annual dividends on the Series AA Shares or such other Preferred Shares at the time outstanding (each such series being in this Clause II.(5)A called a "series in arrears"), then, and in any such event, the number of Directors then constituting the entire Board of Directors of the corporation shall automatically be increased by two Directors and the holders of the shares of all series in arrears, voting together as a single class, shall be entitled to fill such newly created directorships. Such right to vote as a single class to elect two Directors shall, when vested, continue until all dividends in default on the Series AA Shares and such other Preferred Shares, as the case may be, shall have been paid in full and, when so paid, such right to elect two Directors separately as a class shall cease, subject, always, to the same provisions for the vesting of such right to elect two Directors separately as a class in the case of future dividend defaults. At any time when such right to elect two Directors separately as a class shall have so vested, the corporation may, and upon the written request of the holders of record of not less than 20% of the total number of shares of all series in arrears then outstanding shall, call a special meeting of the holders of such shares to fill such newly created directorships for the election of Directors. In the case of such a written request, such special meeting shall be held within ninety (90) days after the delivery of such request, and, in each case, at the place and upon the notice provided by law and in the By-laws of the corporation, *provided* that the corporation shall not be required to call such a special meeting if such request is received less than one hundred twenty (120) days before the date fixed for the next ensuing annual meeting of stockholders of the corporation, at which meeting such newly created directorships shall be filled by the holders of the shares of each series in arrears, voting together as a single class.

(6) *Conversion Rights.*

A. Any Series AA Share may be converted at any time, at the option of the holder thereof, into Common Shares at the rate and on the other terms and conditions set forth in this Clause II.(6).

B. Any holder of Series AA Shares desiring to convert the same into Common Shares shall surrender the certificate or certificates for the Series AA Shares being converted, duly assigned or endorsed to the corporation, at the location specified for such purpose in Clause II.(7)A or at a bank or trust company appointed by the corporation for that purpose, accompanied by a written notice of conversion. Such notice shall specify the number of whole shares of Series AA Shares to be converted and the name or names in which such holder wishes the certificate or certificates for Common Shares to be issued. In case such notice shall specify a name or names other than that of such holder, such notice shall be accompanied by payment of all transfer taxes payable upon the issue of Common Shares in such name or names.

C. As soon as practicable after the surrender of any certificates for conversion, the corporation shall issue and deliver to such holder, at the address of such holder on the stock transfer books of the corporation, or to his designee, a certificate or certificates for the number of full Common Shares to which such holder shall be entitled on conversion. In case there shall have been surrendered a certificate or certificates for Series AA Shares converted in part only, the corporation shall issue and deliver to such holder a new certificate or certificates for the number of Series AA Shares which shall not have been converted. The corporation shall not issue fractional Common Shares upon any conversion of Series AA Shares, but in lieu thereof the corporation shall pay to the holder of Series AA Shares being converted a cash amount in respect of the fraction of such Common Share otherwise issuable upon conversion equal to such fraction multiplied by the closing sale price of one Common Share on the principal securities exchange on which it is traded on the day of surrender of the certificate or certificates to be converted, or, if not then listed on any such exchange, the mean between the high-bid and low-asked prices for the Common Shares in the over-the-counter market at such day; *provided* that if such day in either case shall be a day on which such Common Shares shall not have been traded, then such day shall mean the next preceding day on which such Common Shares shall have been traded. If more than one Series AA Share shall be surrendered for conversion at any one time by the same holder, any fractional shares otherwise resulting from conversion of each one thereof shall be aggregated so that with respect to any one holder there shall be no more than one fractional Common Share issuable upon such conversion. Such conversion shall be effective immediately prior to the close of business on the day of the surrender of the certificate or certificates for shares to be converted, and the person or persons entitled to receive the Common Shares issuable upon such conversion shall be treated for all purposes as the record holder or holders of such Common Shares at such time.

D. If the corporation shall have given notice of any redemption pursuant to Clause II.(4)A and any holder of Series AA Shares shall, prior to the close of business on the last business day preceding the redemption date specified in such notice of redemption, give written notice to the corporation, pursuant to Clause II.(6)B, of the conversion of any or all of the shares to be redeemed, then such redemption shall not become effective as to such shares to be converted and such conversion shall become effective as hereinafter provided in this Clause II.(6).

E. In case of the call for redemption of any Series AA Shares, any right to give notice of conversion as to any of such shares shall terminate at the close of business on the last business day prior to the redemption date specified in the notice thereof. If the corporation shall default in the payment of the redemption price of such shares when due, the conversion rights in respect thereof, if any, shall be reinstated until such default shall have been cured or waived.

F. Series AA Shares shall be convertible into fully paid and nonassessable Common Shares at a conversion rate (subject to adjustment as provided in Clauses II.(6)G and II.(6)H) of 1.4706 Common Shares for each Series AA Share converted (such initial conversion rate, as so adjusted, is called the "Conversion Rate")).

question. The closing price for each day shall be the last reported sales price regular way or, in case no such reported sale takes place on such day, the average of the reported closing bid and asked prices regular way, in either case on the New York Stock Exchange, or, if the Common Shares are not listed or admitted to trading on such Exchange, on the principal national securities exchange on which the Common Shares are listed or admitted to trading, or if not listed or admitted to trading on any national securities exchange, the average of the closing bid and asked prices as furnished by any member of the National Association of Securities Dealers, Inc. selected from time to time by the corporation for that purpose.

(d) No adjustment in the conversion rate shall be required unless such adjustment (plus any adjustments not previously made by reason of this Clause II.(6)G(d)) would require an increase or decrease of at least 1% in the number of Common Shares into which each Series AA Share is then convertible; *provided, however*, that any adjustment which by reason of this Clause II.(6)G(d) is not required to be made shall be carried forward and taken into account in any subsequent adjustment. All calculations under this Clause II.(6)G shall be made to the nearest one-hundred thousandth of a share.

(e) The corporation may, by action of the Board of Directors or Executive Committee, at its election, increase the Conversion Rate to avoid or diminish any Federal income tax to any holder of Common Shares resulting from any dividend or distribution of stock or issuance of rights or warrants to purchase or subscribe for stock or from any event treated as such for Federal income tax purposes.

H. In case the corporation shall effect any capital reorganization or reclassification of its shares or shall consolidate or merge with or into any other corporation (including any merger in which the corporation is the surviving corporation unless each Common Share outstanding immediately prior to such merger is to remain outstanding immediately after the merger) or shall transfer substantially all its assets to any other corporation, lawful provision shall be made as a part of the terms of such transaction whereby the holders of Series AA Shares (or of any convertible security which has been exchanged, substituted or issued for Series AA Shares) shall, if entitled to convert such shares (or other such securities) at any time after the consummation of such transaction, receive upon conversion thereof in lieu of each Common Share issuable upon conversion of such shares prior to such consummation the same kind and amount of stock (or other securities, cash or property, if any) as may be issuable or distributable in connection with such transaction with respect to each outstanding Common Share (or of any security which has been exchanged, substituted or issued for such Common Share) subject to adjustments for subsequent stock dividends and distributions, subdivisions or combinations of shares, capital reorganizations, reclassifications, consolidations or mergers as nearly equivalent as possible to the adjustments provided for in this Clause II.(6).

I. Within 15 days after any adjustment of the Conversion Rate pursuant to this Clause II.(6), the corporation shall give notice thereof to each holder of record of Series AA Shares, which notice shall state the Conversion Rate resulting from such adjustment, setting forth in reasonable detail the method of calculation and the facts upon which such calculation is based.

J. The corporation shall at all times reserve and keep available out of its authorized Common Shares, solely for issuance (free from any preemptive rights) upon the conversion of Series AA Shares as herein provided, such number of Common Shares as shall from time to time be issuable upon the conversion of all the Series AA Shares at the time outstanding. The corporation shall obtain and keep in force such permits or other authorizations as may be required by law to, and shall comply with all requirements as to qualification in order to, enable the corporation lawfully to issue and deliver such number of its Common Shares as shall from time to time be sufficient to effect the conversion of all Series AA Shares from time to time outstanding. The corporation shall from time to time in accordance with applicable law increase the authorized number of Common Shares if at any time the authorized Common Shares remaining unissued and unreserved for other purposes (together with the Common Shares held in its treasury) shall not be sufficient to permit the conversion of all the Series AA Shares at the time outstanding.

The corporation may issue Preferred Stock from time to time in one or more series as the Board of Directors may establish by the adoption of a resolution or resolutions relating thereto, each series to have such voting powers, full or limited, or no voting powers, and such designations, preferences and relative, participating, optional or other special rights, and qualifications, limitations or restrictions thereof, as shall be stated and expressed in the resolution or resolutions providing for the issue of such series adopted by the Board of Directors pursuant to authority to do so, which authority is hereby granted to the Board of Directors.

SIXTH: The duration of the corporation is to be perpetual.

SEVENTH: Except as otherwise provided pursuant to the provisions of this Certificate of Incorporation relating to the rights of certain holders of Preferred Stock to elect additional Directors under specified circumstances, the number of Directors of the corporation shall be determined from time to time in the manner described in the By-laws. The Directors, other than those who may be elected by the holders of Preferred Stock pursuant to this Certificate of Incorporation, shall be classified with respect to the time for which they severally hold office, into three classes, as nearly equal in number as possible, as shall be provided in the manner specified in the By-laws, one class to be originally elected for a term expiring at the annual meeting of stockholders to be held in 1986, another class to be originally elected for a term expiring at the annual meeting of stockholders to be held in 1987, and another class to be originally elected for a term expiring at the annual meeting of stockholders to be held in 1988, with the members of each class to hold office until their successors have been elected and qualified. At each annual meeting of stockholders, the successors of the class of Directors whose term expires at that meeting shall be elected to hold office for a term expiring at the annual meeting of stockholders held in the third year following the year of their election. No Director need be a stockholder.

Except as otherwise provided pursuant to this Certificate of Incorporation relating to the rights of certain holders of Preferred Stock to elect Directors under specified circumstances, newly created directorships resulting from any increase in the number of Directors and any vacancies on the Board of Directors resulting from death, resignation, disqualification, removal or other cause shall be filled by the affirmative vote of a majority of the remaining Directors then in office, even if less than a quorum of the Board of Directors, or by a sole remaining director. Any Director elected in accordance with the preceding sentence shall hold office until the annual meeting of stockholders at which the term of office of the class to which such Director has been elected expires, and until such Director's successor shall have been elected and qualified. No decrease in the number of Directors constituting the Board of Directors shall shorten the term of any incumbent Director.

Subject to the rights of certain holders of Preferred Stock to elect Directors under circumstances specified in this Certificate of Incorporation, any Director may be removed from office only for cause by the affirmative vote of the holders of at least 80% of the voting power of the then outstanding shares of capital stock of the corporation entitled to vote generally in the election of Directors (the "Voting Stock"), voting together as a single class.

Notwithstanding anything contained in this Certificate of Incorporation to the contrary, the affirmative vote of the holders of at least 80% of the Voting Stock, voting together as a single class, shall be required to amend or repeal, or adopt any provision inconsistent with, this Article SEVENTH.

EIGHTH: The By-laws of the corporation may contain provisions, not inconsistent with law or this Certificate of Incorporation, relating to the management of the business of the corporation, the regulation of its affairs, the transfer of its stock, the qualifications, compensation and powers and duties of its Directors and the time and place and the manner of calling the meetings of its stockholders and Directors.

The Board of Directors may from time to time fix, determine and vary the amount of the working capital of the corporation, may determine what part, if any, (i) of its surplus or (ii) in case there shall be no such surplus, of its net profits for the fiscal year in which the dividend is declared and/or the preceding fiscal year shall be declared as dividends and paid to the stockholders, may determine the time or times for the declaration and payment of dividends, the amount thereof and whether they are to

misconduct or a knowing violation of law, (iii) under Section 174 of the Delaware General Corporation Law, or (iv) for any transaction from which the Director derived an improper personal benefit. If the Delaware General Corporation Law is amended after approval by the stockholders of this Article ELEVENTH to authorize corporate action further eliminating or limiting the personal liability of directors, then the liability of a Director of the corporation shall be eliminated or limited to the fullest extent permitted by the Delaware General Corporation Law, as so amended. Any repeal or modification of this Section by the stockholders of the corporation shall not adversely affect any right or protection of a Director of the corporation existing at the time of such repeal or modification.

(2) *Indemnification and Insurance.*

(A) *Right to Indemnification.* Each person who was or is made a party or is threatened to be made a party to or is otherwise involved in any action, suit or proceeding, whether civil, criminal, administrative or investigative (hereinafter a "proceeding"), by reason of the fact that he or she, or a person of whom he or she is the legal representative, is or was a Director, officer or employee of the corporation or is or was serving at the request of the corporation as a director, officer, employee or agent of another corporation or of a partnership, joint venture, trust or other enterprise, including service with respect to employee benefit plans (hereinafter, an "indemnitee"), whether the basis of such proceeding is alleged action in an official capacity as a Director, officer, employee or agent or in any other capacity while serving as a Director, officer, employee or agent, shall be indemnified and held harmless by the corporation to the fullest extent authorized by the Delaware General Corporation Law, as the same exists or may hereafter be amended (but, in the case of any such amendment, only to the extent that such amendment permits the corporation to provide broader indemnification rights than said Law permitted the corporation to provide prior to such amendment), against all expense, liability and loss (including attorneys' fees, judgments, fines, ERISA excise taxes or penalties and amounts paid or to be paid in settlement) reasonably incurred or suffered by such indemnitee in connection therewith and such indemnification shall continue as to an indemnitee who has ceased to be a Director, officer, employee or agent and shall inure to the benefit of the indemnitee's heirs, executors and administrators; *provided, however,* that, except as provided in paragraph (B) hereof with respect to proceedings to enforce rights to indemnification, the corporation shall indemnify any such indemnitee in connection with a proceeding (or part thereof) initiated by such indemnitee only if such proceeding (or part thereof) was authorized by the Board of Directors of the corporation. The right to indemnification conferred in this Section shall be a contract right and shall include the right to be paid by the corporation the expenses incurred in defending any such proceeding in advance of its final disposition (hereinafter, an "advancement of expenses"); *provided, however,* that, if the Delaware General Corporation Law requires, an advancement of expenses incurred by an indemnitee in his or her capacity as a Director or officer (and not in any other capacity in which service was or is rendered by such indemnitee, including, without limitation, service to an employee benefit plan) in advance of the final disposition of a proceeding, shall be made only upon delivery to the corporation of an undertaking (hereinafter, an "undertaking"), by or on behalf of such indemnitee, to repay all amounts so advanced if it shall ultimately be determined by final judicial decision from which there is no further right to appeal (hereinafter, a "final adjudication") that such indemnitee is not entitled to be indemnified for such expenses under this Section or otherwise, and, *provided further,* that an advancement of expenses incurred by an employee other than a Director or officer in advance of the final disposition of a proceeding shall be made, unless otherwise determined by the Board of Directors, only upon delivery to the corporation of an undertaking by or on behalf of such employee to the same effect as any undertaking required to be delivered by a Director or officer.

(B) *Right of Indemnitee to Bring Suit.* If a claim under paragraph (A) of this Section is not paid in full by the corporation within sixty days after a written claim has been received by the corporation, except in the case of a claim for an advancement of expenses, in which case the applicable period shall be twenty days, the indemnitee may at any time thereafter bring suit against the corporation to recover the unpaid amount of the claim. If successful in whole or in part in any such suit, or in a suit brought by the corporation to recover an advancement of expenses pursuant to the terms of an undertaking, the indemnitee shall be entitled to be paid also the expense of prosecuting or defending such suit. In (i) any suit brought by the indemnitee to enforce a right to indemnification hereunder (but not in a suit brought by the indemnitee to enforce a right to an advancement of expenses) it shall be a defense that,

Allied Signal

1990 Annual Report

A Commitment to Excellence

17, 18, 19, 20, 22

041005

Allied-Signal Inc.

Allied-Signal's businesses are organized into three segments — Aerospace, Automotive and Engineered Materials — and serve vital industries in major markets worldwide. The Corporation has 105,800 employees at over 450 facilities in the United States and more than 40 other countries and territories.

Financial Highlights

Years ended December 31

(Dollars in millions except per share amounts)	1990	1989	1988
Net sales	$12,343	$11,942	$11,909
Net income	462	528	463
Percent of sales	3.7	4.4	3.2*
Earnings per share	3.35	3.55	3.10
Dividends per share	1.80	1.80	1.80
Research, development and engineering	721	603	647
Return on average shareholders' equity	13.9	15.6	12.0*
Total assets	10,456	10,342	10,069
Book value per share of common stock	25.10	23.53	22.09
Average shares outstanding (in millions)	138.2	148.8	149.3
Common shareholders	97,210	102,042	111,402

*Excludes nonrecurring items.

Letter to Shareholders 1
Quality and Productivity A Commitment to Excellence 4
1990 Operational Highlights 17
Management's Discussion and Analysis 20
Consolidated Statement of Income 27
Consolidated Statement of Retained Earnings 27
Consolidated Balance Sheet 28
Consolidated Statement of Cash Flows 29
Notes to Financial Statements 30
Selected Financial Data 39
Management Committee and Corporate Officers 40
Board of Directors and Shareholder Information 41

To Our Shareholders

Nineteen ninety was a year of mixed results. The economic slowdown adversely affected all of our businesses, especially Automotive, which also experienced losses in its Brazilian operations and turbocharger unit. Aerospace and Engineered Materials earnings remained strong, and all three businesses achieved significant successes with new products, contract wins and other programs that strengthen our longer-term prospects.

But 1990's performance did not meet our goals. Earnings were $462 million, a decline of $66 million from the previous year. Earnings per share were $3.35, only slightly below 1989, in part as a result of our share buy-back program.

We are continuing to pursue a sale of our 39 percent interest in Union Texas Petroleum Holdings, Inc., an energy exploration and production company. Late in the year, Union Texas' board of directors announced that it had discontinued efforts to sell the entire company but would continue efforts to sell its U.S. businesses. Allied-Signal's investment in Union Texas remains a valuable asset.

Allied-Signal Aerospace achieved solid results in 1990, with a number of factors contributing to the good performance. The sector's business mix is well balanced between original-equipment and aftermarket sales, between commercial and government sales, and between U.S. and non-U.S. sales. In addition, we benefit from strong leadership in most of our key products such as avionics, auxiliary power units and aircraft wheels and brakes. Finally, we continue to develop and engineer new products and systems that build on our technological strengths.

Commercial aviation represents some of the best growth prospects for the future. Over 40 airlines around the world have selected our Traffic Alert and Collision Avoidance System (TCAS). In addition, Airbus Industrie will offer our system as standard optional equipment on all its new aircraft. We have also begun marketing the system for use on corporate aircraft.

We have received contracts with over one billion dollars in sales potential for the new Boeing 777 airliner. About half the business is for our *Garrett* auxiliary power units (APU), the balance for cabin pressure and air supply systems.

Our *Garrett* APU also was selected for the new Eurofighter program, a contract valued at about $150 million that helps confirm our leadership in the European APU market. And our new CFE738 turbofan engine, developed in a

joint venture with General Electric, was selected to power Dassault's new Falcon 2000 twin-engine eight-passenger jet.

Allied-Signal Automotive experienced a serious setback during the year. The problems, to a large extent, are concentrated in the recession-hit North American market, the U.S. turbocharger business and in our Brazilian operations, which were affected by that government's anti-inflation policies.

The sector has tightened controls on all phases of its operations, especially working capital, staffing levels, expenses and capital expenditures. If the recession should persist or deepen, we are prepared to take further actions to offset its impact.

We took decisive action in response to the disappointing performance of the Garrett turbocharger business. We realigned the management structure with new leadership and are reducing the number of U.S. plants from five to three. We expect the turbocharger unit to significantly improve its results in 1991.

Despite the sagging economy, some units, like Bendix Heavy Vehicle Systems, are holding their own. And others, most notably Autolite, are achieving excellent results.

Europe holds particular promise for profitable growth. Our more than 40 European automotive plants and other facilities, with nearly 15,000 employees and $1.8 billion in sales, give us perhaps the best strategic position of any U.S.-based automotive supplier in Europe.

Our sizeable investment in anti-lock braking systems (ABS), for example, has resulted in a full range of products that will contribute substantially to our growth in Europe. We now supply our ABS to Peugeot and Renault and will begin production in 1992 for two other major automotive manufacturers.

The recent acquisition of the Valeo brake friction materials business in France and Spain also has improved our ability to serve the European market with a full range of products.

Allied-Signal Engineered Materials achieved good results for the year. Despite the economic slowdown, its business units continued to demonstrate the strong returns and cash flow they have historically generated.

The high-density polyethylene joint venture established last year with Exxon Corporation also had very good results, as did our UOP process technology joint venture with Union Carbide set up in 1988.

In 1990, Engineered Materials embarked on a number of initiatives designed to broaden and strengthen its competitive presence. Most notable has been its aggressive expansion into world markets.

In Europe, we announced plans for a new polyester fiber plant in Longlaville, France, to meet the growing need for high-performance, low-cost fiber for passenger car tires and other industrial uses. We also plan to double the capacity of our automotive catalysts plant in Florange, France. The demand for catalysts will grow exponentially in Europe as stringent auto emission standards are put in place starting with the 1993 model year.

We are also continuing to pursue opportunities in the Far East. Next year at a new plant in Thailand, Norplex Oak will start production of copper-clad circuit board laminates for customers throughout the Pacific Rim. The sector also has started shipments of our proprietary amorphous metal alloy, *Metglas,* into Japan under an agreement reached by the U.S. Trade Representative. The Japanese market for this advanced material is estimated at $100 million annually.

Looking forward into 1991 and beyond, the challenges and uncertainties that grip our attention are apparent. The course of the recession cannot be determined with full confidence. And, the impact of the Persian Gulf War on the economy and our businesses is difficult to assess. The need to maintain lean and efficient operations was never more urgent than it is now. In response, we recently instituted a company-wide salary freeze, and we are taking other actions to lower our operating expenses.

But, in spite of the need to respond to these immediate concerns, several priorities remain at the core of Allied-Signal's strategic purpose and plans. We are convinced that they will see us through the economic slump and, more importantly, let us emerge a stronger, better positioned and more successful company in the years ahead.

First, we are steadfast in our commitment to quality and productivity gains. We are determined to have the pursuit of quality influence our every decision, involve all of our employees, and change each of our businesses. The handful of examples described in this report represents only the beginning of a movement that is gathering force across the Company.

Second, we are continuing to make the necessary investments in projects that will build our future. Our investments remained substantial in 1990: Company-funded research, development and engineering totaled $721 million and capital expenditures were $675 million. Current plans call for 1991 spending at about the same levels. These expenditures represent not only opportunities but the foundations of a future that will not wait for the recession to run its course.

Finally, the expanding and newly opened markets in Europe, the Far East and elsewhere offer tremendous opportunities for selective growth. Many of our efforts in 1990 were focused on these global opportunities. We will continue to do so.

What we want is an approach that achieves a strong current profit performance and the longer-term objectives inherent in these three priorities, a creative balance that engages all of our managers, production workers, engineers and scientists. We are confident that our 105,800 employees have the energy, the will and the resources to achieve this goal, and we are determined to make it happen.

Edward L. Hennessy, Jr.

Edward L. Hennessy, Jr.
Chairman and
Chief Executive Officer

Alan Belzer

Alan Belzer
President and
Chief Operating Officer

February 11, 1991

A Commitment to Excellence

To succeed in the 1990s, quality must be an obsession and productivity a driving force. Many processes aimed at improving both have emerged at Allied-Signal over the past several years. They have focused on customers' needs and on the Company's determination to produce high-quality, reliable products at low cost. Some have required the expenditure of capital funds; all have evolved through the ingenuity and collaboration of employees. The profiles that follow are a sampling of the diverse quality/productivity efforts that are under way in the Company. They honor the employees directly involved in the activities. They also pay tribute to all the Allied-Signal men and women whose commitment to excellence is helping assure the Company's future prosperity while adding to their own work experience and job satisfaction.

Machining specialist Ed Simko, who operates a numerically controlled machining center at Garrett Engine Division, Phoenix, Arizona, is typical of the Allied-Signal craftsman whose skills on a variety of machine tools are needed for advanced manufacturing cells. This type of machine grouping assures product quality, significantly reduces plant lead times and increases efficiency. Such progress helped the Division earn a 1990 Chairman's Award for Productivity Excellence.

Customer Relations: Forging Strategic Alliances

Building strong relationships with customers is central to Allied-Signal's success in the marketplace. It entails working with them to develop specifications for the components, parts or systems that will enhance their end-products; manufacturing and delivering these products according to customers' requirements and providing solid aftermarket support.

Of the many such efforts throughout the Company, few are more creative and fruitful than SAM — the Strategic Alliance Mills initiative launched by Engineered Materials' Allied Fibers group in Petersburg, Virginia.

With quality and productivity as its linchpins, the SAM program is strengthening the bond between Allied Fibers and the mills that use its *Anso* and *Anso V WorryFree* nylon fibers in the manufacture of their residential and commercial carpeting.

At the heart of the SAM program are the teams of Allied Fibers representatives from virtually every area — sales, product development, manufacturing, technical, customer service and merchandising — who have formed partnerships with their counterparts at the mills, meeting regularly either at Allied facilities or customers' plants to explore ways to help each other improve their products, processes, marketing and service functions.

SAM is a logical extension of the business unit's many customer-focused activities, ranging from retail merchandising promotions and technical seminars to consumer literature and hotlines, all of which have helped the Company's nylon fibers products gain their very strong market positions.

Not surprisingly, Allied Fibers' mill customers have embraced SAM with enthusiasm. One large carpet manufacturer, for example, has drawn on a SAM team's recommendations to improve stock-keeping units, materials flow and reduce inventory buildup, while another is targeting techniques to incorporate greater product quality into its manufacturing process.

In the highly competitive fibers industry, SAM is unique, a collaborative effort helping both Allied Fibers and its mill customers embark on dozens of quality and productivity journeys where it counts most — at the very beginning of the distribution chain.

Allied Fibers engineer Charles Rollins, left, and Eddie Middlebrooks, manager of Shaw Industries' Milledgeville, Georgia, plant, are two members of a SAM team. The technical experts are in constant contact, sharing their knowledge to help improve product quality and yields in their own and each other's operations. Shaw Industries, Inc. uses *Anso* products in their Cabin Crafts, Philadelphia and Evans-Black carpeting.

Supervisor Bill Hunter and Trang Luong, a test technician, are among the scores of AiResearch employees responsible for maintaining the plant's high quality standards and productivity gains. As a corrective action team leader, Hunter has the authority to troubleshoot manufacturing problems in his area if they arise, while Luong's pretesting of electronic circuitry before installation assures defect-free engine controls.

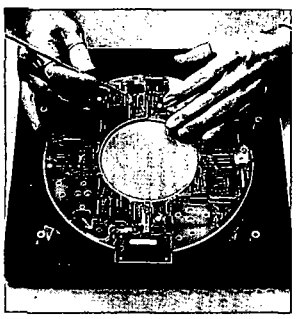

Employee Participation: Creating a New Culture

For decades, corporations like Allied-Signal have routinely claimed that people are their greatest asset. Yet, just how great was never fully appreciated until management began to harness in earnest the power of individual initiative and innovation. Today, employee participation and teamwork are becoming more prevalent and the results are often dramatic, as they have been at Allied-Signal Aerospace's AiResearch Division in Tucson, Arizona.

As recently as three years ago, this division, which manufactures electronic controls, air data computers and monitoring devices, was plagued with operational problems. It had too much of everything: too many suppliers, departments, supervisors and projects in the master production schedule. It also had too much work-in-process.

A new management team with a vision and strategy for continuous improvement moved in. Central to its success would be the creation of a more participative culture where well-trained employees would assume greater responsibility for the quality of their output, be empowered to remedy problems as they arose and encouraged to offer suggestions on ways to improve the plant's efficiency.

Using a team approach to identify the most pressing issues as well as solutions, the management and the workers introduced many changes. Those designed to improve the flow of materials — from the procurement of parts to the shipment of finished goods — were the broadest in scope. For example, the number of outside suppliers was reduced from some 1,500 to 500 and the materials and procurement operations were consolidated and streamlined to eliminate an entire level of supervision. The master production schedule was also brought into sharper alignment with customers' delivery requirements.

The results to date: 95 percent of the plant's products are being shipped on time; inventory days have been cut in half, saving millions of dollars in working capital; in-process rejects are down by 25 percent, and the amount of goods shipped per manufacturing employee per month is up 40 percent.

One of the most meaningful measures is how the Tucson unit is doing in the eyes of its customers. From all accounts, quite well: one of them, Boeing Military Airplane Company of Wichita, Kansas, has chosen the AiResearch Division as the benchmark for the caliber of service and support it needs and wants from its suppliers.

The 1,400 people at AiResearch are quick to note that there is more to be done. But that, they emphasize, is the very core of their continuous improvement strategy.

Manufacturing: Building in Quality

Over the last decade, Allied-Signal has invested hundreds of millions of dollars to retool its manufacturing facilities to improve product quality, boost production and reduce costs. At Automotive's Bendix Heavy Vehicle Systems plant in London, Ontario, the transformation to state-of-the-art manufacturing not only brought about such improvements but also strengthened the plant's competitive position.

There was little doubt about the need for change at this Canadian site, where brake valves for heavy trucks are produced. Opened in the 1960s, the plant's operating costs constantly spiraled upward. By the early 1980s, competition from overseas and other low-cost manufacturers was seriously jeopardizing the plant's viability.

Convinced they could produce higher quality goods and improve their profitability with more up-to-date production methods — and aware they would save more jobs with automation than would be lost if the negative trends continued — the plant management sought and obtained approval for a five-year program to modernize the factory floor.

By 1985, flexible machining systems, advanced robotics, statistical process controls, computerized equipment for testing during assembly and a plant-wide "data highway" that tracks quality, engineering and production data were all put in place. The cost was about $4.3 million.

Although a relatively small outlay for a company with the financial resources of Allied-Signal, the expenditures realized big improvements for the plant, more than justifying the expense.

Not the least of the benefits of automation has been the plant's ability to improve product quality while dramatically reducing operating costs, cutting in half, for example, its working capital requirements. Moreover, the plant is now exporting its production to customers with on-time deliveries at 99 percent.

Today, the 260-employee facility, once threatened by competitive forces, produces about one million heavy-duty automobile parts each year and has even added to its heavy truck product base. In addition to valves, the plant is producing anti-lock braking system components. It has also become one of Automotive's showcase operations.

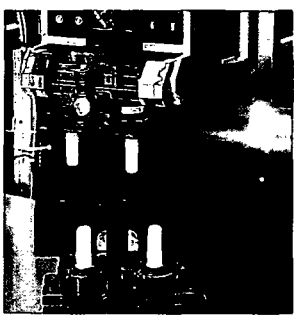

General assembler Liz Skocir, of Bendix Heavy Vehicle Systems, is one of many who helped usher in a new era for the Canadian plant when it replaced outdated production methods with a factory floor that features advanced manufacturing equipment. Once on a production line, Skocir today is responsible for an automated cell where modulating valves used in heavy truck braking systems are assembled by high-technology machinery.

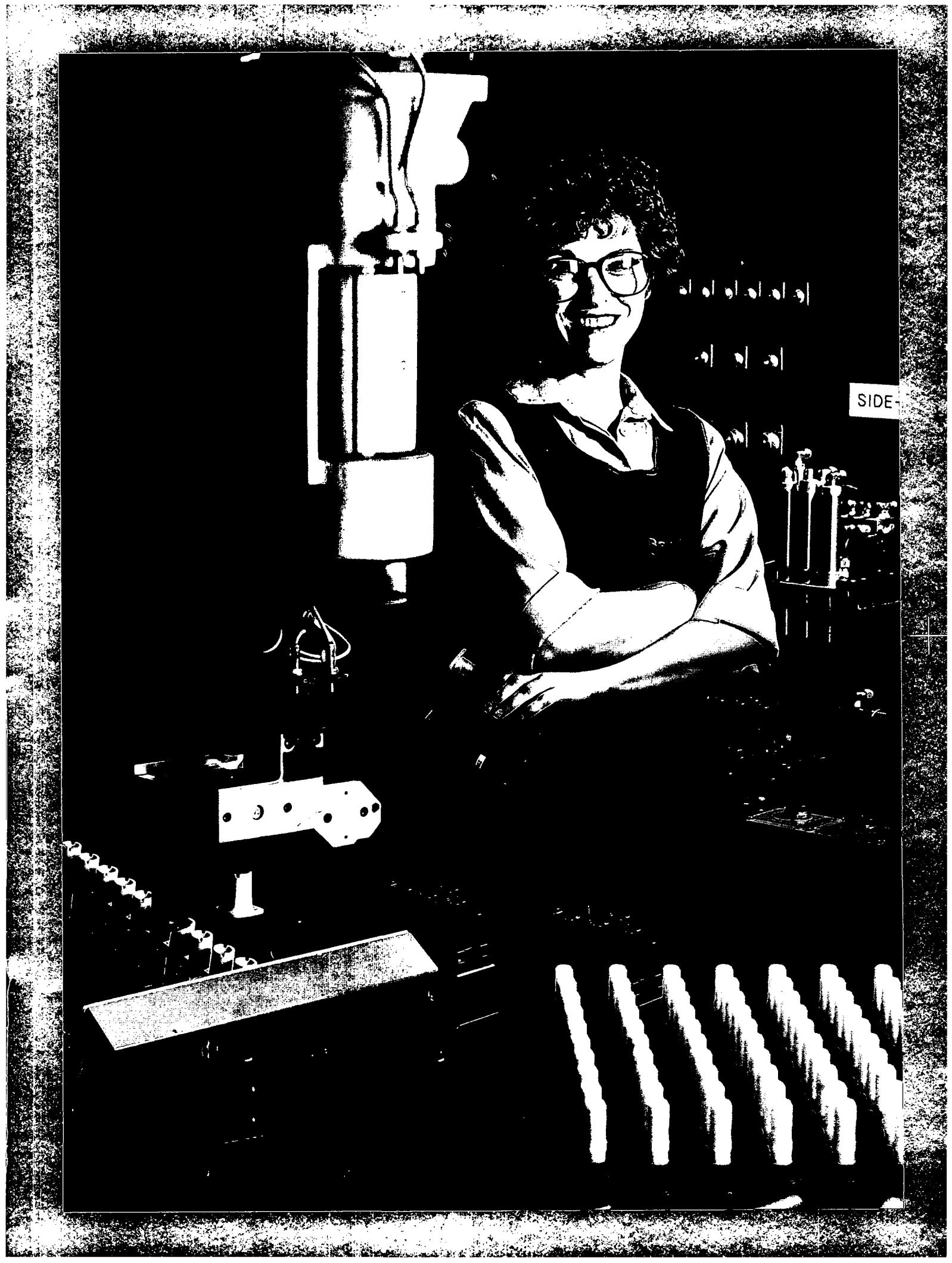
SIDE

Researcher Steve Sund, of the Math and Simulation Sciences unit of Corporate Research and Technology, has principal responsibilities for modeling one of the Aerospace sector's key manufacturing processes. He is one of more than 30 engineers and scientists involved in the group's quality-related investigations, all undertaken at the request of various business units.

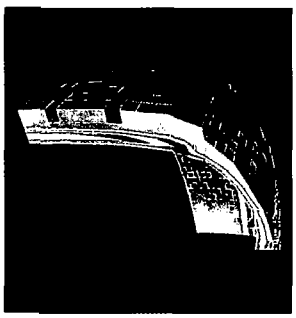

Research and Technology: Seeking New Methods

Spending $1.3 billion a year for research, development and engineering (R,D&E) does more than ensure Allied-Signal new products to commercialize. It also leads to more advanced processes that can significantly enhance product quality and shorten the time it takes to bring those products to customers, many of whom help fund various R,D&E projects.

The Math and Simulation Sciences group of Corporate Research and Technology is in the vanguard of that effort. Working with three-dimensional computer-generated mathematical models, these scientists are able to determine the interrelationships among a customer's specifications, a product's design, the process used to manufacture the product and the quality that results, simulating conditions that otherwise might be difficult — if not impossible — to probe experimentally.

In one application of this scientific discipline, researchers in the Morris Township, New Jersey, laboratory are simulating the various process steps used by Aerospace's Bendix Wheels and Brakes Division in South Bend, Indiana, in the manufacture of their landing gear for military and commercial aircraft.

It is expected that a greater understanding of the diverse mechanical and chemical processes will lead to accelerating production while achieving improved quality and uniformity of these highly complex products and their components.

The Aerospace project is one of ten specific quality/productivity assignments that the Math and Simulation Sciences group currently has under way. It is also using expert systems and data bases and other sophisticated measurement methods to help improve the performance of such products as automotive catalysts, industrial fibers and circuit board laminates.

A valuable resource, the Math and Simulation Sciences unit is pushing the frontiers of technology, augmenting the engineering expertise of its internal customers.

Administrative Areas: Finding a Better Way

At Allied-Signal's headquarters in Morris Township, New Jersey, the corporate staff is also pursuing excellence through administrative projects, many with impressive results. Witness the 27-employee Retiree Benefits Administration (RBA) department whose customers are the Company's 55,000 pensioners and 22,000 pension-eligible people who left the Company before retirement age. Making certain they receive their benefits on time and with accuracy is no simple task, and the group's formally organized Continuous Improvement Process (CIP) teams are always seeking ways to upgrade their services.

For example, there is their new method for issuing some $25 million in pension checks each month, a method that has speeded up the process and drastically reduced the time it takes to resolve problems, including replacing lost or stolen checks.

As Allied-Signal acquired companies in the 1980s, it also acquired five different pension payroll systems — each with its own electronic or manual procedures and various outside vendors. All were eventually brought under RBA's central control. Over time, however, managing the diverse systems became very complex, costly and time-consuming.

In the fall of 1989, a nine-member CIP team set out to find a better way, drawing on the talents and expertise of others in such corporate departments as Treasurer's, Controller's, Information Systems and Human Resources, as well as outside financial institutions. From the collaboration came a multi-faceted, step-by-step plan for merging the five payroll systems into one, using a single bank.

Completed in November 1990, the new system is projected to save Allied-Signal over $400,000 a year. More important, it is offering streamlined service to the thousands of Allied-Signal retirees who can now contact the bank directly with their banking questions.

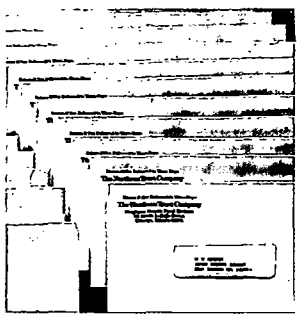

Payroll supervisor Paula Siciliano, left, of the Retiree Benefits Administration, and Carol Seiter, a senior systems analyst in Corporate Information Systems, were two of the 18 employees involved in the development of the new payroll system for Allied-Signal's 55,000 retirees. The project has improved the process, provided additional services to pensioners and is projected to save the Corporation more than $400,000 per year.

What is Quality?

Quality can be both perception and reality. It is, nonetheless, ultimately defined by customers who set the standards for products and services according to their needs.

Quality on the part of suppliers is not just meeting those needs but surpassing them, taking that extra step, making that special effort to literally *delight* their customers.

Quality is created through an ongoing process that has a beginning but no end, a journey that has milestones with which to mark progress but no terminus.

Quality is achievable through teamwork and hard work — consistent, persistent hard work by people of like mind who recognize that *good enough* is never good enough.

Quality can be the nucleus of a corporate culture and, when driven by management and embraced by every employee, the single most dynamic force that moves an organization forward.

At Allied-Signal, the quest for quality is real and it is urgent.

It is being advanced by senior executives who recognize that quality and market leadership are inseparable, especially in the highly competitive world markets in which the Company competes.

It is beginning to be integrated in the annual objectives and plans of business managers.

It is becoming an employee focus, helping to create a new sense of mission and involvement among those who have been trained, given the proper tools, empowered to solve problems and inspired by their management to take ownership of their work.

The preceding profiles highlight the Company's commitment to excellence. They represent the beginning of Allied-Signal's long, unending quality journey.

1990 Operational Highlights

Aerospace

AiResearch Group
Avionics Group
Engine Group
Energy Management and Services Group

Net Sales

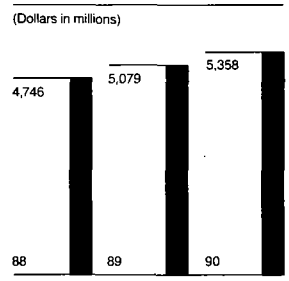

Net Income

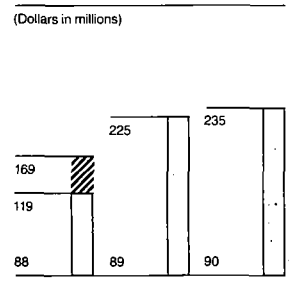

% Excludes streamlining and restructuring charges.

● The Boeing Company awarded Allied-Signal two contracts to supply equipment for its new twin-engine B777 jetliner scheduled for service in 1995. The contracts, with a potential value of some $1 billion, are for *Garrett* auxiliary power units (APU) and the development of a new system to control the aircraft's air supply and cabin pressure.

● Orders for Allied-Signal's Traffic Alert and Collision Avoidance System (TCAS) continued to mount from several airlines including a number of international carriers such as the Soviet Union's Aeroflot, the Air France group, Iberia, Finnair and Lufthansa. At year end, the Company led the announced TCAS market with commitments for almost 3,400 shipsets, which, with spares, have a total value in excess of $500 million.

● Airbus Industrie also selected the *Bendix/King* TCAS as standard optional equipment on a number of its models, including the new A340 and A330 commercial transports.

● Northrop Corp. selected a *Garrett* APU for its F-23 Advanced Tactical Fighter (ATF). Northrop and its project partner, McDonnell Douglas, are vying with another team for the ATF production contract which, when awarded, could cover the building of some 1,300 Air Force and Navy jet fighters. The potential value to Allied-Signal is estimated at $750 million over the life of the program.

● In Europe, Garrett GmbH will take the lead among companies designing and developing the APU for the Eurofighter jet, to be built jointly by Germany, Italy, Spain and the United Kingdom.

● The CFE738 turbofan engine, developed by divisions of Allied-Signal and General Electric, was chosen to power Dassault's Falcon 2000, a new high-performance executive jet.

● Under a long-term contract, valued at some $140 million, Bendix Field Engineering will provide technical support services for NASA's Space Station Freedom, managing the training centers and operating and maintaining their systems.

● McDonnell Douglas selected Allied-Signal as the sole-source supplier of the main electrical power system for its new family of MD-90 commercial transports to be in service by 1994.

● The T800 engine, developed by divisions of Allied-Signal and General Motors for the U.S. Army's next-generation helicopters, was selected to power a twin-engine Battlefield Lynx by Westland Helicopter Ltd. of the United Kingdom.

● Delta Air Lines selected *Bendix* wheels and brakes for its fleet of Boeing 737-300 aircraft. The airline has ordered, or has on option, 113 of the commercial transports.

Locations of Facilities	Principal Products	Markets
United States: *Alabama, Arizona, California, Colorado, Connecticut, District of Columbia, Florida, Georgia, Illinois, Indiana, Kansas, Maryland, Michigan, Missouri, Nevada, New Jersey, New Mexico, New York, North Carolina, Ohio, Oklahoma, Oregon, Pennsylvania, South Carolina, Texas, Virgin Islands, Virginia, Washington.* Australia, Belgium, Brazil, Canada, France, Germany, Greece, Ireland, Japan, Mexico, Singapore, Spain, Switzerland, United Kingdom.	Auxiliary power units Turboprop, turbofan and turboshaft engines Environmental control systems Engine controls Flight control systems Wheels and brakes Avionics Cockpit displays Guidance systems Land mobile equipment Torpedo propulsion Sonars Actuators Electric power generating systems Test systems	Commercial transport and regional airlines General aviation Military aviation Airports Aftermarket parts, maintenance and retrofitting Engineering management Technical support services Underseas/anti-submarine warfare Space Missiles
Headquarters: Torrance, California		

Automotive

Bendix Automotive Systems Group
Bendix Heavy Vehicle Systems Group
Friction Materials Group
Allied-Signal Aftermarket Group
Bendix Safety Restraints Group
Garrett Automotive Group
Autolite

Net Sales

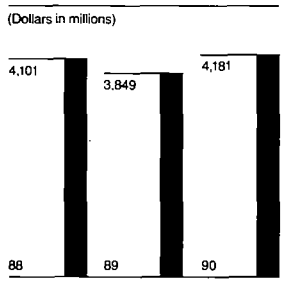

Net Income

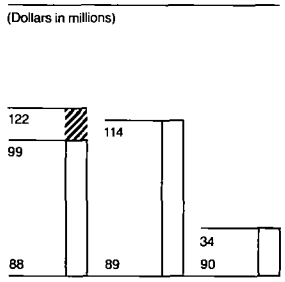

% Excludes streamlining and restructuring charges.

● The brake friction materials business of the European automotive manufacturer, Valeo, was acquired. The purchase includes facilities in France and Spain, and with the Company's German subsidiary, Jurid Werke, makes Allied-Signal one of the Continent's most broadly based friction materials suppliers. The acquisition also strengthens Allied-Signal's position in the compact and mid-size vehicle segments and independent aftermarket.

● A new business development office was established in Paris, France, to help guide Allied-Signal Automotive in pursuing new opportunities in Europe, especially in the emerging economies of Eastern Europe.

● The Clarksville, Tennessee, plant began assembling anti-lock braking systems (ABS) for passenger cars/light trucks. The plant is currently being expanded to include a machining center and other areas. This is part of a five-year, $140 million investment in ABS for the North American market.

● Chrysler introduced its 1991 Dodge Caravan, the first minivan in North America to be equipped with a four-wheel ABS and an air bag restraint system — both of them bearing the *Bendix* brand name.

● In the 1990s, Ford's North American-built heavy trucks will feature *Bendix* ABS. Under a sole-supplier agreement, Allied-Signal will provide two ABS versions, a drive-axle system that will help increase vehicle stability and a full-vehicle system that will monitor and control both front and rear wheels.

● Allied-Signal and Morton International's Automotive Safety Products Group formed a joint venture to produce passenger-side air bag modules at an expanded facility in Maryville, Tennessee, where the Company has been assembling driver-side air bags since 1989.

● Mitsubishi Motors of Japan awarded the Company's Jurid Werke subsidiary a contract to supply front disc brake pads for its Sigma model, which is exported to Europe. The order is Mitsubishi's first overseas procurement of brake parts.

● A variable-nozzle *Garrett* turbocharger that boosts performance and fuel efficiency in heavy-truck engines was introduced. Initial production is now under way for four diesel engines of the Nissan Motor Company.

Locations of Facilities	Principal Products	Markets
United States: *Alabama, Arizona, California, Florida, Georgia, Illinois, Indiana, Kentucky, Michigan, Missouri, Nevada, New Jersey, New York, North Carolina, Ohio, Oregon, Pennsylvania, Rhode Island, South Carolina, Tennessee, Texas, Utah.* Argentina, Australia, Austria, Belgium, Brazil, Canada, Denmark, Egypt, Finland, France, Germany, India, Ireland, Italy, Japan, Mexico, Netherlands, New Zealand, Norway, Portugal, Singapore, South Korea, Spain, Sweden, Turkey, United Kingdom, Venezuela. Headquarters: Southfield, Michigan	Hydraulic and air vehicle braking systems and components Anti-lock braking systems Disc pads/segments/brake linings Occupant protection systems Air bag systems and components Spark plugs Turbochargers for diesel and gas engines Charge-air intercoolers Oil, air, fuel and transmission filters	Passenger cars Light, medium, heavy trucks Off-highway vehicles Recreational vehicles Railway and marine equipment Aircraft and industrial equipment Aftermarkets of all the above

Engineered Materials

Fibers Group
Fluorine Products Group
Plastics and Performance Materials Group
Norplex Oak

Net Sales*

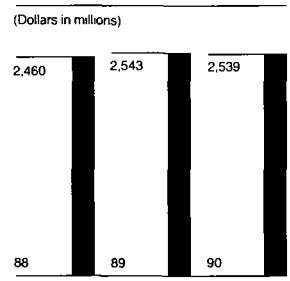

*Excludes sales for operations joint ventured in mid-1988 and mid-1990.

Net Income

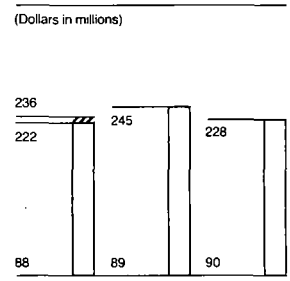

% Excludes streamlining and restructuring charges

● In response to the Company's formal complaint, the U.S. Trade Representative and Japanese officials negotiated an agreement that requires strict observance of Allied-Signal's Japanese patent rights for *Metglas* amorphous alloys until late 1997, and opens up heretofore closed markets by ordering electric utilities in that country to purchase 32,000 transformers with cores made of *Metglas* alloys.

● The Company announced it would build a plant in Longlaville, France, to manufacture industrial polyester fiber for automotive tires and other applications. The facility will supply European tiremakers who are beginning to switch to all-polyester fiber for tire reinforcement.

● In Florange, France, the automotive catalyst plant was being expanded to better serve European automakers as they strive to meet new pollution control standards beginning with their 1993 models.

● The Company also revealed plans to build a Norplex Oak plant in Chonburi, Thailand, to produce copper-clad laminates used in printed circuit boards. The plant is expected to begin supplying customers in the Pacific Rim by 1992.

● The Aquatech Systems business unit announced an agreement with Ahlstrom Machinery Group of Finland which will market the Company's process for recycling wastes produced during pulp and paper manufacturing. Aquatech Systems invented and developed the process, which uses bipolar membranes to separate sodium sulfate, a waste product of pulp bleaching, into reusable manufacturing chemicals.

● The Environmental Protection Agency approved commercialization of HCFC 141b as a substitute for chlorofluorocarbons in foam and solvent cleaning applications. The product will be produced at a new plant in Geismar, Louisiana, expected to start up in 1992.

● To help improve its competitive position, the high-density polyethylene (HDPE) business in Baton Rouge, Louisiana, became a joint venture operation with Exxon Chemical Company, a division of Exxon Corporation.

● A multi-million-dollar expansion that will more than double the manufacturing capacity of *Spectra* high-performance fibers got under way at Petersburg, Virginia. The expansion provides for market growth of the versatile super-strong fiber used in bullet-resistant products and other applications, and permits development of new *Spectra* variants.

● Production of *Apical* polyimide film, used in electronics, military and aerospace markets, started up at a new plant in Pasadena, Texas. Managed by Allied-Signal, the facility is a joint venture of Allied-Signal and Kanegafuchi Chemical Industry Co. Ltd. of Japan.

Locations of Facilities	Principal Products	Markets
United States: *Alabama, Arizona, California, Connecticut, Delaware, Florida, Georgia, Illinois, Indiana, Iowa, Louisiana, Michigan, Minnesota, New Jersey, New York, North Carolina, Ohio, Oklahoma, Oregon, Pennsylvania, South Carolina, Texas, Virginia, Wisconsin.* Australia, Belgium, Brazil, Canada, France, Germany, Hong Kong, Italy, Mexico, New Zealand, Singapore, Taiwan, Thailand, United Kingdom.	Nylon home furnishing fibers Nylon and polyester industrial fibers Nylon apparel fibers Engineered plastics Low-molecular-weight polyethylene Films Hydrofluoric acid Fluorocarbons Uranium hexafluoride Circuit board laminates Tar products Amorphous metal alloys Specialty chemicals Automotive catalysts	Residential/commercial carpeting Tires Apparel Seat belts Recreational products Bullet-resistant helmets and body armor Refrigeration/solvents Gas/electric utilities Food and pharmaceutical packaging Electronics Computers Telecommunications Aluminum Automotive Aerospace
Headquarters: Morris Township, New Jersey		

Management's Discussion and Analysis

1990 Compared with 1989

Financial Condition. In 1990, the Company operated in an increasingly difficult economic environment. Fundamentals in the important automotive and housing markets were soft at the start of the year. Results, starting in the second quarter, were influenced by the beginning of an economic slowdown and oil prices were substantially higher in the latter part of the year. Although the Company focused on near-term performance: cash flow, asset management and expense reduction, it also continued to strengthen its strategic commitment to be a strong global company. Research, development and engineering and capital spending programs were increased. The Company also continued to increase its emphasis on productivity and quality.

At December 31, 1990, the Company had total assets of $10,456 million, up slightly from total assets of $10,342 million at December 31, 1989. In 1990, cash flow from operating and investing activities, excluding proceeds from asset sales, was lower by $170 million compared to last year, a result of increased research, development and engineering spending and higher capital expenditures. In 1991, total cash uses from operating and investing activities, before asset sales, is expected to exceed related cash sources in the range of $100–$200 million. The current ratio at year-end 1990 was 1.3x, the same as at December 31, 1989.

The Company has a $1.2 billion revolving credit agreement (Credit Agreement). At December 31, 1990, the Company had borrowings of $500 million outstanding under this Credit Agreement. The Credit Agreement also serves as support for the issuance of commercial paper as well as notes, $292 million of such notes were outstanding at year end, under the Company's Employee Stock Ownership Plans funding program (ESOP Program) for the Company's contributions to employee savings plans. Commercial paper outstanding at year-end 1990 was $207 million, while at the end of 1989 there was no commercial paper outstanding. Commercial paper borrowing reached a high of $1,013 million during 1990 at a time when there was no borrowing under the Credit Agreement.

During the year, total debt increased by $366 million to $2,748 million, while long-term debt increased by $148 million to $2,051 million. The increase of $366 million in total debt was financed by borrowings under the Credit Agreement, the issuance of commercial paper and higher borrowings, at advantageous rates, under the ESOP Program. The increase in debt, coupled with a decrease in cash and cash equivalents, reflects repurchases of common stock and other major uses of funds as discussed above.

The Company redeemed $125 million of 11.75 percent Euro Notes in February 1990, and repurchased $86 million (face amount) of 8 percent Euro Notes in June 1990. The Company's total debt as a percent of capital was 40.4 percent at December 31, 1990, up from 35.7 percent at year-end 1989 and the long-term debt to capital ratio increased from 30.8 percent at year-end 1989 to 33.6 percent at December 31, 1990. See Note 13 of Notes to Financial Statements for details of long-term debt and a discussion of the Credit Agreement.

Under an existing shelf registration filed with the Securities and Exchange Commission, the Company can issue up to $460 million of additional debt and debt warrant securities. The Company expects to take down the proceeds from this registration from time to time, commencing as early as February 1991.

Standard and Poor's has downgraded the Company's long-term debt from A to A− and the Company's commercial paper from A-1 to A-2. Moody's has downgraded the Company's long-term debt from A2 to A3 and the Company's commercial paper from P-1 to P-2. The rating agencies reviewed the Company's debt as a result of delays in the sale of Union Texas Petroleum Holdings, Inc. (Union Texas), the Company's portion of the proceeds of which were to be used to reduce outstanding debt. Fitch Investors Service recently affirmed their ratings on the Company's long-term debt and commercial paper of A and F-1, respectively. Management believes that the reduction in the Company's credit ratings will not have a material impact on the Company's results of operations or financial position.

In December 1990, Union Texas disclosed that it had discontinued efforts to sell the entire corporation because no acceptable proposal was received, but that it would continue to pursue the sale of the U.S. domestic businesses and other alternatives to enhance shareholder value. The Company subsequently announced that it would continue to pursue a sale of its interest in Union Texas. Although there is no assurance that any sale by either Union Texas or the Company will occur, depending on the circumstances, a sale may result in a substantial gain to, or receipt of substantial cash by, the Company.

The Company purchased 13.4 million shares of common stock for $452 million in 1990 and issued 3.1 million shares for employee and shareholder programs. Common stock is repurchased primarily to reduce outstanding shares and to meet the requirements for shares issued under employee benefit plans and a shareholder dividend reinvestment plan. At year end, the Company had 44.4 million shares of common stock held in treasury recorded at $1,578 million. At December 31, 1990, the Company has remaining authority to repurchase 14.3 million shares of common stock.

Net Sales

(Dollars in billions)

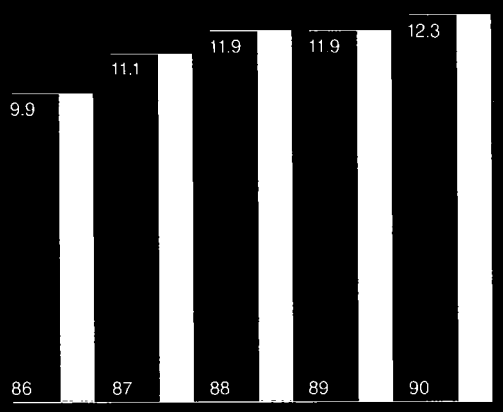

Income from Continuing Operations*

(Dollars in millions)

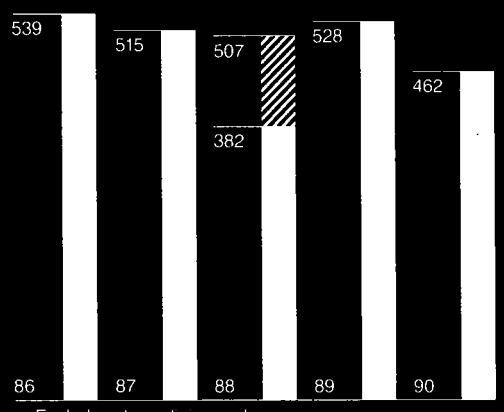

⁄⁄ Excludes streamlining and restructuring charges.

* Excludes nonrecurring items.

Earnings from Continuing Operations*

(Dollars per share)

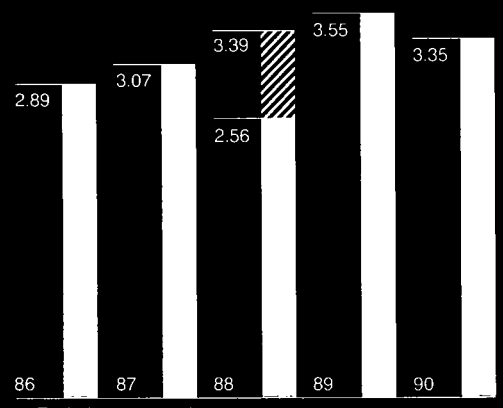

⁄⁄ Excludes streamlining and restructuring charges.

* Excludes nonrecurring items.

Capital Expenditures/ R, D & E

(Dollars in millions)

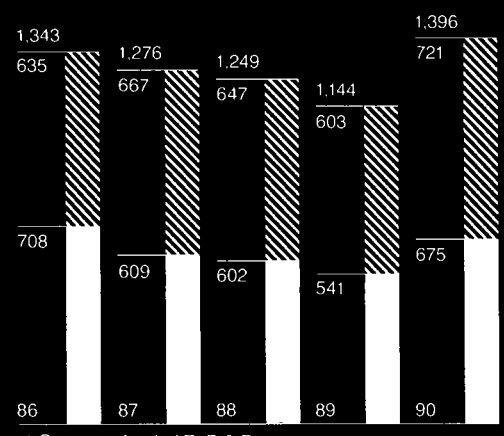

⁄⁄ Company-funded R. D & E

■ Capital expenditures

Long-term Debt as a Percent of Capital

(Percent)

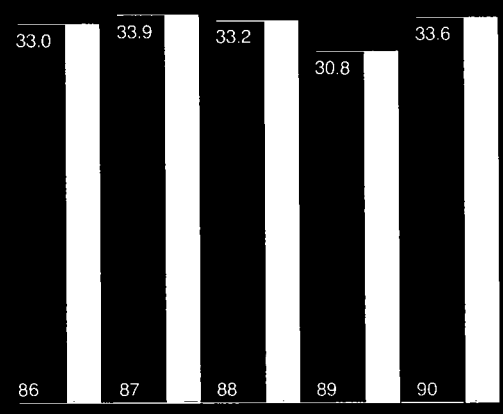

Return on Investment*

(After-tax percent)

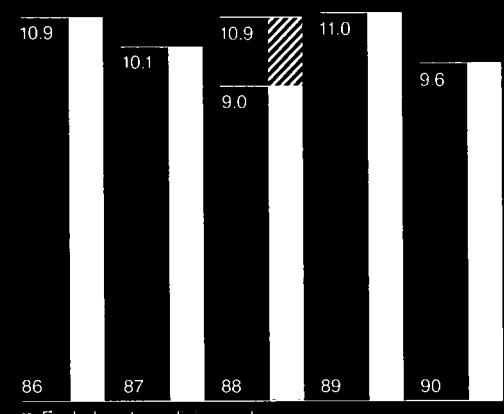

⁄⁄ Excludes streamlining and restructuring charges.

* Excludes nonrecurring items.

During 1990, the Company spent $675 million for capital expenditures, an increase of $134 million from the $541 million spent in 1989. The higher capital spending in 1990 included expenditures for projects that had been delayed during 1989. Spending by the segments and Corporate since 1988 is shown in Note 23 of Notes to Financial Statements. The Company's total capital expenditures in 1991 are currently projected at about $650 million and are expected to be financed through a combination of internally and externally generated funds. Approximately 63 percent of the projected 1991 expenditures are anticipated to be for expansion and cost reduction, 28 percent for replacement and maintenance and 9 percent for environmental and other projects.

Effective July 1, 1990, the Company contributed its high-density polyethylene (HDPE) business and its partner, Exxon Corporation, contributed cash to a newly formed, equally owned joint venture (HDPE Joint Venture). The Company's HDPE business had net sales of $450 million in 1989. The Company is accounting for its investment, net of any advances, in the new venture by the equity method.

Results of Operations. Net sales in 1990 totaled $12.3 billion, an increase of $401 million, or 3 percent, compared to last year. The joint venturing of HDPE, effective July 1, 1990, however, had the effect of reducing the sales increase by $203 million. Excluding the impact of this change, net sales increased $604 million, or 5 percent, compared to 1989. Of this increase, $213 million was due to higher sales, mainly of new products, including traffic alert and collision avoidance systems (TCAS), MK50 torpedo, anti-lock braking systems and air bags, $195 million was due to higher prices while $196 million was due to foreign exchange rate fluctuations. The $604 million improvement reflects increases of $279 and $332 million for Aerospace and Automotive, respectively. Sales for Engineered Materials remained essentially unchanged. Aerospace had substantially higher deliveries of the Engine Group's original-equipment and retrofit gas turbine engines and auxiliary power units, initial shipments of the Avionics Group's TCAS and increased management and technical services. Sales to the commercial market improved, while contract sales to the U.S. government, as a prime and subcontractor, remained about even with last year, although the percentage of sales to the U.S. government declined slightly. Automotive was favorably impacted by foreign exchange rate fluctuations and had generally higher selling prices and increased sales volumes of anti-lock braking systems and air bags. Lower sales of brakes and safety restraints to the North American automotive manufacturers, however, partly offset these gains. Engineered Materials increased its sales of automotive catalysts and engineered plastics, but these increases were offset by lower sales of chlorofluorocarbons (CFCs).

The Company is a party to lawsuits and claims relating to, and has incurred remedial response and voluntary clean-up costs associated with, environmental matters. Additional lawsuits and claims involving environmental matters are likely to continue to arise from time to time in the future. The Company continually conducts studies to determine the feasibility of various remedial techniques to address environmental matters. Upon completion of such studies, the Company generally is able to record appropriate liabilities for such matters. Some of such studies are expected to be completed in 1991, and others will be completed from time to time thereafter. Although the Company does not currently possess sufficient information to reasonably estimate the amounts of the liabilities to be recorded as a result of such studies, they may be significant to the consolidated results of operations. Remedial response and voluntary cleanup expenditures were $61 and $40 million in 1990 and 1989, respectively, and are currently estimated to increase to approximately $80 million in 1991, more than half of which has been recorded and the remainder of which is expected to be expensed on a current basis. While neither the timing nor the amount of the ultimate costs associated with environmental matters can be determined, management does not expect that those matters will have a material adverse effect on the consolidated financial position of the Company.

See Note 18 of Notes to Financial Statements for a discussion of the Company's commitments and contingencies, including those related to environmental matters.

Income from operations of $730 million decreased $216 million, or 23 percent, compared to last year. The income for Aerospace decreased by 3 percent, Automotive decreased by 45 percent and Engineered Materials decreased by 19 percent. The Engineered Materials' decrease included the impact of the joint venturing of HDPE. The losses for Corporate were slightly lower. See the discussion of net income below for information by segment.

In view of the recessionary economic conditions, which are expected to continue to adversely affect many of the Company's markets at least through the first half of the year, and the uncertainties created by the war in the Mideast, the Company is taking special steps to lower costs. One such step has been the institution of a temporary salary freeze applicable to all of the Company's salaried employees and a five percent salary reduction applicable to its senior management. These salary arrangements will be reviewed by the Company periodically during 1991.

The Company believes that, excluding the impact of the Mideast war, defense spending cuts are likely to be significant and will occur over the next three to five years. New military programs in the Aerospace segment could be vulnerable to cancellation and the current production rates of existing programs may be scaled back. The Company believes that, in spite of these changes, it is relatively well positioned to adapt to the emerging business environment. Since 1986, the Aerospace segment's sales to the U.S. government, as a prime and subcontractor, have gradually been declining, while commercial sales have increased. In 1986, the percentage of such sales to the U.S. government was 55 percent of total Aerospace sales; in 1990 this percentage was 42. A growing commercial business is expected to buffer Aerospace against a reduction in defense spending. Moreover, the Aerospace segment is not dependent on any one key defense program or commercial customer. However, the commercial business is, itself, subject to major business cycles and a decline in air transport aircraft deliveries, from their current highs, may also occur. In addition, increased fuel costs have recently reduced aircraft usage and have adversely affected commercial airline spare parts orders.

The Company, as are other government contractors, is subject to government investigations of business practices and compliance with government procurement regulations. Although such regulations provide that a contractor may be suspended or debarred from government contracts under certain circumstances, and the outcome of pending government investigations cannot be determined, management is not presently aware of any such investigation which it expects will have a material adverse effect on the Company.

The Company's Automotive segment is expected to benefit from restructuring and other cost reduction efforts, including a number of manufacturing, quality and spending control programs, especially by the turbocharger business, as well as from a more stable automotive replacement parts market and an improved Brazilian economy. However, the segment is expected to be unfavorably impacted in 1991 by further reductions in new vehicle demand in North America and a slowdown in Europe, and by the highly competitive nature of the automotive industry, as indicated by more stringent requirements relating to quality and pricing as well as the absorption by suppliers, like the Company, of increasing amounts of new product development costs.

The Engineered Materials segment is a major supplier of CFCs, which are covered by the Montreal Protocol (Protocol). The Protocol regulates worldwide CFC production and consumption. In 1990, the Protocol and U.S. Clean Air Act amendments accelerated a previous production phasedown schedule and now require a 100 percent elimination of fully halogenated CFC production by the year 2000. The Company is aggressively pursuing development of environmentally acceptable fluorocarbons to replace the current CFC product line and expects to spend approximately $250 million in research and development and fixed capital over a 10 year period ending in 1998 to achieve this goal. Also, effective January 1, 1990, Congress imposed a tax (the Ozone Depletion Unit fee) on the sale of CFCs which approximately doubled the cost of CFCs, for certain applications, to customers. As a consequence, conservation and substitution have resulted in lower CFC demand, which is expected to lead to substantially lower income. Also, favorable HDPE profitability in 1990, in part resulting from an explosion of a competitor's plant in October 1989, is expected to be significantly reduced in 1991 because of a 20 percent increase in announced industry capacity that will soon become operational. 1991 profitability will also be impacted by the joint venturing of HDPE in July 1990, in which the Company has a 50 percent interest.

In December 1990, the Financial Accounting Standards Board (FASB) issued Statement No. 106 (FASB No. 106) — "Employers' Accounting for Postretirement Benefits Other Than Pensions" which requires the Company to change the timing of recognizing the cost of the post-retirement benefits provided to employees from the current cash to the accrual method of accounting by 1993. Currently, the Company is unable to quantify the impact of FASB No. 106 on its results of operations and financial position, although FASB No. 106 is expected to have a significant adverse effect in the year of adoption. Such impact will depend on medical inflation rates and the level of benefits provided by the Company's benefit plans in the future.

Other income/expense of $49 million decreased $17 million, or 26 percent, mainly due to reduced interest income, partly offset by a gain on the repurchase of the Euro Notes.

Interest and other financial charges of $278 million decreased $38 million, or 12 percent, mainly due to lower interest on taxes, debentures and foreign debt, partly offset by increased interest on higher levels of commercial paper outstanding as well as revolving credit borrowings.

The effective tax rate for 1990 was 27.9 percent, 6.7 percentage points lower than last year, due primarily to a lower effective tax rate related to foreign operations as well as the benefit of tax incentives for U.S. exports. See Note 6 of Notes to Financial Statements for further information on income taxes. In December 1987, the FASB issued Statement No. 96 (FASB No. 96) — "Accounting for Income Taxes" which would have required the Company to change its method of accounting for income taxes in 1989. Subsequently, the FASB issued additional statements which deferred the effective date of FASB No. 96 from 1989 to the first quarter of 1992. Due, in part, to the uncertainty of the FASB's deliberation on possible amendments, the Company has not yet adopted FASB No. 96. On an ongoing basis, management believes that FASB No. 96 should not have a significant impact on the Company's financial statements. The Company cannot now determine the impact of FASB No. 96 in the year of adoption because that impact will vary depending on the tax status of the Company at that time, as well as the timing elected by the Company of either a prospective or retroactive application, a decision which has not yet been made. Moreover, such impact will vary based on the nature of any amendments to FASB No. 96. In general, the adoption of FASB No. 96 should result in a moderate reduction in equity, a portion of which will be offset by lower tax expense in the future, primarily because of the required change in the method of accounting for deferred taxes for acquisitions.

Equity in income of affiliated companies of $101 million increased $28 million, or 38 percent, due mainly to the inclusion of the results of the HDPE Joint Venture in the last six months of 1990 and higher earnings from the UOP joint venture. A partial offset was the absence of the 1989 one-time gain of $23 million, or $.16 a share, from Union Texas' business interruption insurance settlement. Total earnings from Union Texas, including dividends on preferred stock, were $59 and $80 million in 1990 and 1989, respectively.

Net income for 1990 was $462 million, $66 million lower than 1989, and earnings per share for 1990 of $3.35 decreased by $.20 a share. Included in the 1989 amounts was the gain of $23 million, or $.16 a share, from Union Texas' business interruption insurance settlement. Excluding that one-time item, 1990 net income was $43 million lower than 1989 because of a slight improvement for Aerospace, a small decrease for Engineered Materials

and substantially lower income for Automotive as discussed below. In addition, net income benefited from a lower effective tax rate of 27.9 percent. Earnings per share, which was about even with last year, benefited from a 7 percent reduction in average shares outstanding.

The following provides sales and net income by segment:

(Dollars in millions)

Aerospace	1990	1989	Variance
Sales	$5,358	$5,079	$279
Net income	235	225	10

Aerospace's sales increased 5 percent and net income rose 4 percent over last year. Earnings improved based on increased deliveries of the Engine Division's original-equipment and retrofit gas turbine engines, initial shipments of the Avionics Group's TCAS and higher sales of products in the Energy Management and Services Group related to anti-submarine warfare and aircraft wheels and brakes. These gains were partly offset by lower operating earnings as well as increased development and start-up costs for the Auxiliary Power Division. In addition, the segment incurred higher development costs for new engines and wheel and brake programs.

Automotive	1990	1989	Variance
Sales	$4,181	$3,849	$332
Net income	34	114	(80)

The Automotive segment had a sales increase of 9 percent, but net income was down 70 percent compared to last year. Income was significantly lower because of reduced volumes and margins in the brake and safety restraint businesses, reflecting continued weakness in the original-equipment market, lower margins for the restructured North American turbocharger unit and product launch and development costs for anti-lock braking systems. The decrease also reflects unfavorable results from operations in Brazil, where economic disruptions severely impacted second quarter results. Autolite's spark plug business continued to show improvement.

Engineered Materials	1990	1989	Variance
Sales	$2,786	$2,993	$(207)
Net income	228	245	(17)

Engineered Materials' sales were about even with last year, after excluding $203 million reflecting the joint venturing of the HDPE business. Net income decreased 7 percent compared to last year mainly because of soft demand, intense price competition and increased costs for petroleum-based raw materials. Lower earnings for industrial, intermediate and apparel fibers, fluorine products, Norplex Oak copper foil laminates and engineered plastics were partly offset by improved earnings for HDPE, the UOP joint venture and A-C polyethylene resins.

The impact of inflation on the Company has been substantially mitigated by the Company's significant capital expenditure program and by valuing the Company's major acquisitions at current costs. In addition, inflation has generally been low and the Company has been generally able to offset any impact of inflation through productivity increases, cost reduction programs, favorable inventory turnover rates and price increases.

1989 Compared with 1988

Financial Condition. In 1989, the Company achieved solid improvements over the previous year. Despite a softening economy, net income, cash flow and working capital performance all showed considerable progress. The Company is controlling its costs while continuing to invest in its businesses. To strengthen its competitive standing, the Company continued to expand internationally and by introducing a number of technically advanced products.

At December 31, 1989, the Company had total assets of $10,342 million, up from total assets of $10,069 million at December 31, 1988. Major uses of funds during 1989 included capital expenditures and spending for research, development and engineering programs. In 1989, cash flow from operating and investing activities, excluding proceeds from asset sales, improved by $435 million compared to last year, a result of higher net income, favorable working capital utilization, delayed capital expenditures and increased deferred income taxes. The current ratio at year-end 1989 was 1.3x, the same as at December 31, 1988.

The Company has access to additional cash through a $1.2 billion Credit Agreement. The Credit Agreement serves as support for the issuance of commercial paper as well as notes under the ESOP Program for the Company's contributions to employee savings plans. Although there was no commercial paper outstanding at year-end 1989 or 1988, commercial paper borrowing reached a high of $161 million during 1989.

During the year, total debt increased by $78 million to $2,382 million, although long-term debt decreased by $141 million to $1,903 million. Current maturities of long-term debt increased $180 million, with a corresponding decrease in long-term debt, mainly reflecting the Company's decision to call $125 million of 11.75 percent Euro Notes (maturing on February 20, 1992) on February 20, 1990. The transaction will be funded through cash from operations and commercial paper borrowing. The increase of $78 million in total debt compared to 1988 was mainly due to higher borrowings at advantageous rates under the ESOP Program. The Company's total debt as a percent of capital was 35.7 percent at December 31, 1989, compared to 35.9 percent at December 31, 1988, and the long-term debt to capital ratio decreased from 33.2 percent at year-end 1988 to 30.8 percent at December 31, 1989. See Note 13 of Notes to Financial Statements for details of long-term debt and a discussion of the Credit Agreement.

The Company purchased 5.8 million shares of its common stock for $208 million in 1989. Common stock is repurchased primarily to reduce outstanding shares and to meet the requirements for shares issued under employee

benefit plans and a shareholder dividend reinvestment plan. At year end, the Company had 34.1 million shares of common stock held in treasury recorded at $1,266 million. In January 1990, the Board of Directors authorized a new common stock repurchase program of 25 million shares, of which the Company has remaining authority to repurchase approximately 25 million shares.

During 1989, the Company spent $541 million for capital expenditures, a decrease of $61 million from the $602 million spent in 1988. The lower capital spending in 1989 was the result of delays on various current projects. Spending by the segments and Corporate since 1988 is shown in Note 23 of Notes to Financial Statements.

Results of Operations. Net sales in 1989 totaled $11.9 billion, up $33 million compared to last year. Included in the 1988 amount were aggregate sales of $554 million for businesses sold or joint ventured. Excluding the impact of these businesses, 1989 sales increased $587 million over 1988. Of this increase, $425 million was due to volume and $270 million was due to price, partly offset by a decrease of $108 million resulting from foreign exchange rate fluctuations. The $587 million improvement in sales reflects increases of $487, $83 and $25 million for Aerospace, Engineered Materials and Automotive, respectively. Aerospace had significantly higher sales volumes to the commercial market, but slightly lower sales, as a prime and subcontractor, to the U.S. government. Engineered Materials had generally higher selling prices, but lower sales volumes of its circuit board laminates. The Automotive segment had higher selling prices, partly offset by foreign exchange rate fluctuations. Sales volumes for Automotive remained unchanged.

Selling, general and administrative expenses decreased $92 million, or 6 percent. As a percentage of sales, such expenses decreased from 12.0 percent in 1988 to 11.2 percent in 1989. The savings were a result of the Company's 1988 streamlining program and the disposition of businesses, partly offset by normal wage and cost increases.

Streamlining and restructuring charges for 1988 are discussed in Note 2 of Notes to Financial Statements.

Remedial response and voluntary cleanup expenditures were $40 and $24 million in 1989 and 1988, respectively.

Income from operations of $946 million in 1989 increased by $265 million, or 39 percent, compared to last year. The increase reflects the absence of last year's charge of $197 million for streamlining and restructuring, as well as significantly improved results by Aerospace and a smaller benefit from lower costs at Corporate, partly offset by lower earnings for the Engineered Materials segment (mainly reflecting the joint venturing of UOP which was included in equity income). The Automotive segment's income from operations was approximately the same as last year. See the discussion of net income below for information by segment.

Since 1986, the percentage of Aerospace segment's sales to the U.S. government has been declining, while commercial sales have increased. In 1986, sales to the U.S. government were 55 percent of total Aerospace sales; in 1989, this percentage was 44 percent.

One of Engineered Materials' principal HDPE competitors experienced a major plant explosion in October 1989. The Company believes that there could be a short-term favorable impact on HDPE profitability as a result of the temporary dislocation of industry capacity.

Other income/expense decreased $39 million, or 37 percent, in 1989 reflecting the absence of last year's $61 million (after-tax $36 million, or $.24 a share) gain on the sale of the Company's 14 percent interest in Akebono Brake Industry Company Ltd. (Akebono) investment, partly offset by higher interest income and a reduction in foreign exchange losses.

The nonrecurring gain in 1988 is discussed in Note 4 of Notes to Financial Statements.

The effective tax rate for 1989 was 34.6 percent, 6.8 percentage points higher than last year mainly due to a lower benefit in 1989 from rate and basis adjustments relating to disposed operations. See Note 6 of Notes to Financial Statements for further information on income taxes.

Equity in income of affiliated companies increased $67 million. The improvement reflects higher income from the UOP joint venture, as well as improved earnings from the Company's investment in Union Texas relating to a one-time gain of $23 million, or $.16 a share, from Union Texas' business interruption insurance settlement. The UOP joint venture, which combined the Company's process technology business and the catalyst business of Union Carbide Corporation, has been accounted for by the equity method since May 1, 1988. Total earnings from Union Texas, including dividends on preferred stock, were $80 and $57 million in 1989 and 1988, respectively.

Net income for 1989 was $528 million, $65 million higher than 1988, and earnings per share for 1989 of $3.55 improved by $.45 a share. Included in the 1989 amounts was the gain of $23 million, or $.16 a share, from Union Texas' business interruption insurance settlement. Included in 1988 were the streamlining and restructuring charges of $125 million, or $.83 a share; a gain of $36 million, or $.24 a share, from the sale of the investment in Akebono; and a gain of $81 million, or $.54 a share, from the sale of the automotive electronics unit and the formation of a joint venture. Excluding the above one-time items, 1989 net income was $34 million higher than 1988 and earnings per share improved by $.23 because of substantially improved operations for Aerospace and a smaller increase for Engineered Materials, partly offset by lower income for Automotive as discussed below. In addition, 1988 benefited from a low effective tax rate of 27.8 percent.

The following provides sales and net income by segment:

(Dollars in millions)

Aerospace	1989	1988	Variance
Sales	$5,079	$4,746	$333
Net income	225	119	106

Aerospace's sales increased $487 million, after excluding sales associated with several small disposed businesses during this time period. Earnings improved because of the absence of one-time streamlining and restructuring charges recorded in 1988 of $50 million and because of higher sales of engines and auxiliary power units, including aftermarket, avionics test equipment, secure communications, target detection devices, general aviation and air transport avionics, electronics and pneumatic and environmental controls. Cost reduction efforts also contributed to improved earnings. Development spending by Aerospace on new engines, engine controls and wheels and brakes remained high.

Automotive	1989	1988	Variance
Sales	$3,849	$4,101	$(252)
Net income	114	99	15

The Automotive segment had a sales increase of $25 million, after excluding the sales of $277 million of the automotive electronics business which was disposed of in 1988. Earnings were higher because of the absence in 1989 of both the one-time streamlining and restructuring charges recorded in 1988 of $23 million and operating losses of $20 million from the automotive electronics business. However, earnings, excluding these items, were lower than last year because of reduced worldwide demand for higher margin automotive replacement parts, increased raw material costs, increased investment for anti-lock braking systems and lower sales of occupant protection systems as well as unfavorable foreign exchange rate fluctuations. Autolite's spark plug business had higher aftermarket sales and margins.

Engineered Materials	1989	1988	Variance
Sales	$2,993	$3,033	$(40)
Net income	245	222	23

Engineered Materials' sales increased $83 million, after excluding the impact of joint venturing the UOP process technology business which had 1988 sales of $123 million. Earnings improved because of the absence of the one-time streamlining and restructuring charges recorded in 1988 of $14 million and because of higher sales of Fluorine products, partly offset by higher raw material costs and lower prices for HDPE and Engineered Plastics, as well as higher raw material costs and lower volumes in the Fibers business.

Report of Independent Accountants

4 Headquarters Plaza North
Morristown, NJ 07962

Price Waterhouse

January 25, 1991

To the Shareholders and Directors
of Allied-Signal Inc.

In our opinion, the accompanying consolidated balance sheet and the related consolidated statements of income and retained earnings and of cash flows present fairly, in all material respects, the financial position of Allied-Signal Inc. and its consolidated subsidiaries at December 31, 1990 and 1989, and the results of their operations and their cash flows for each of the three years in the period ended December 31, 1990, in conformity with generally accepted accounting principles. These financial statements are the responsibility of the Company's management; our responsibility is to express an opinion on these financial statements based on our audits. We conducted our audits of these statements in accordance with generally accepted auditing standards which require that we plan and perform the audit to obtain reasonable assurance about whether the financial statements are free of material misstatement. An audit includes examining, on a test basis, evidence supporting the amounts and disclosures in the financial statements, assessing the accounting principles used and significant estimates made by management, and evaluating the overall financial statement presentation. We believe that our audits provide a reasonable basis for the opinion expressed above.

Price Waterhouse

Consolidated Statement of Income

Allied-Signal Inc.

(Dollars in millions except per share amounts)

	Years ended December 31		
	1990	1989	1988
Net sales	**$12,343**	$11,942	$11,909
Cost of goods sold	**10,226**	9,663	9,606
Selling, general and administrative expenses	**1,387**	1,333	1,425
Streamlining and restructuring	**—**	—	197
Total costs and expenses	**11,613**	10,996	11,228
Income from operations	**730**	946	681
Other income/expense	**49**	66	105
Nonrecurring items	**—**	—	165
Interest and other financial charges	**(278)**	(316)	(318)
Income before taxes on income	**501**	696	633
Taxes on income	**140**	241	176
Equity in income of affiliated companies	**101**	73	6
Net income	**$ 462**	$ 528	$ 463
Earnings per share of common stock*	**$ 3.35**	$ 3.55	$ 3.10

*Earnings per share of common stock are based upon the following weighted average number of shares: 1990, 138,242,467 shares; 1989, 148,751,135 shares; and 1988, 149,319,204 shares. No dilution results from outstanding common stock equivalents.

Consolidated Statement of Retained Earnings

(Dollars in millions except per share amounts)

	Years ended December 31		
	1990	1989	1988
Balance at beginning of year	**$ 1,923**	$ 1,671	$ 1,503
Net income	**462**	528	463
Other	**(24)**	(8)	(26)
Common stock dividends ($1.80 per share)	**(248)**	(268)	(269)
Balance at end of year	**$ 2,113**	$ 1,923	$ 1,671

The "Notes to Financial Statements" are an integral part of these statements.

Consolidated Balance Sheet

Allied-Signal Inc.

(Dollars in millions)

		December 31	
		1990	1989(a)
Assets	Current assets:		
	Cash and cash equivalents	$ 382	$ 525
	Accounts and notes receivable	1,452	1,443
	Inventories	2,168	2,063
	Other current assets	314	320
	Total current assets	4,316	4,351
	Investments and long-term receivables	1,139	996
	Property, plant and equipment — net	3,584	3,321
	Cost in excess of net assets of acquired companies — net	1,107	1,318
	Other assets	310	356
	Total assets	$10,456	$10,342
Liabilities	Current liabilities:		
	Accounts payable	$ 1,256	$ 1,132
	Short-term borrowings	564	259
	Current maturities of long-term debt	133	220
	Accrued liabilities	1,471	1,675
	Total current liabilities	3,424	3,286
	Long-term debt	2,051	1,903
	Deferred income taxes	673	873
	Other liabilities	928	868
Shareholders' equity	Capital — common stock — Authorized 500,000,000 shares (par value $1 per share); issued: 1990 — 179,072,010 shares; 1989 — 179,061,813 shares	179	179
	— additional paid-in capital	2,568	2,568
	Common stock held in treasury, at cost: 1990 — 44,384,339 shares; 1989 — 34,059,172 shares	(1,578)	(1,266)
	Cumulative foreign exchange translation adjustment	98	8
	Retained earnings	2,113	1,923
	Total shareholders' equity	3,380	3,412
	Total liabilities and shareholders' equity	$10,456	$10,342

The "Notes to Financial Statements" are an integral part of this statement.
(a) Reclassified for comparative purposes.

Consolidated Statement of Cash Flows

Allied-Signal Inc.

(Dollars in millions)

		Years ended December 31		
		1990	1989(a)	1988(a)
Cash flows from operating activities	Net income	$ 462	$ 528	$ 463
	Adjustments to reconcile net income to net cash flows from operating activities:			
	Depreciation and amortization (including goodwill)	460	424	416
	Deferred taxes	17	69	(57)
	Liabilities extinguished by the use of common stock	85	83	87
	Decrease (increase) in accounts and notes receivable	101	37	(124)
	(Increase) in inventories	(53)	(14)	(126)
	Decrease (increase) in other current assets	7	(132)	33
	Increase in accounts payable	96	41	116
	(Decrease) in accrued liabilities	(238)	(88)	(146)
	Gain on sales of businesses (1989/1988) and investments (1988)	—	(10)	(158)
	Other	65	93	164
	Net cash flow provided by operating activities	1,002	1,031	668
Cash flows from investing activities	Expenditures for property, plant and equipment	(675)	(541)	(602)
	Cash paid for acquisitions, net of cash acquired	—	(31)	—
	Proceeds from disposals of property, plant and equipment	13	55	32
	Proceeds from sales of businesses (1989/1988) and investments (1988)	—	64	359
	Decrease (increase) in investments	(66)	(70)	142
	Net cash flow (used for) investing activities	(728)	(523)	(69)
Cash flows from financing activities	Short-term borrowings (commercial paper/credit agreement)	457	—	—
	Net increase (decrease) in other short-term borrowings	(191)	37	36
	Proceeds from issuance of common stock	12	14	11
	Proceeds of long-term debt	359	107	113
	Repurchases of long-term debt (including current maturities)	(345)	(62)	(259)
	Repurchases of common stock	(461)	(208)	(183)
	Cash dividends on common stock	(248)	(268)	(269)
	Net cash flow (used for) financing activities	(417)	(380)	(551)
	Net increase (decrease) in cash and cash equivalents	(143)	128	48
	Cash and cash equivalents at beginning of year	525	397	349
	Cash and cash equivalents at end of year	$ 382	$ 525	$ 397

The "Notes to Financial Statements" are an integral part of this statement.
(a) Reclassified for comparative purposes.

(Dollars in millions except per share amounts)

Note 1. Summary of Significant Accounting Policies

Consolidated financial statements include the accounts of Allied-Signal Inc. and majority-owned subsidiaries.

Investments and long-term receivables are carried at the lower of cost or market, and in the case of affiliates over which significant influence is exercised, using the equity method of accounting.

Inventories are valued at the lower of cost or market using the last-in, first-out (LIFO) method for certain qualifying domestic inventories and the first-in, first-out (FIFO) or the average cost method for other inventories.

Recognition of contract revenues primarily relates to Aerospace operations. Under fixed-price contracts, sales and related costs are recorded as deliveries are made. Sales and related costs under cost-reimbursable contracts are recorded as costs are incurred. Anticipated future losses on contracts are charged to income when identified. Contracts which are part of a program are evaluated on an overall program basis.

Property, plant and equipment are carried at cost and are generally depreciated using estimated service lives, which range from 3 to 40 years. For the financial statements, depreciation is computed principally on the straight-line method.

Cost in excess of net assets of acquired companies is being amortized on a straight-line basis over 25- or 40-year periods. The cumulative amount of goodwill amortized at December 31, 1990, and December 31, 1989, is $224 and $191 million, respectively. In 1990 the Company reduced acquired goodwill by $203 million as a result of the recognition of tax benefits associated with prior year acquisitions.

Environmental expenditures that relate to current operations are expensed or capitalized as appropriate. Expenditures that relate to an existing condition caused by past operations, and which do not contribute to current or future revenue generation, are expensed. Liabilities are recorded when environmental assessments and/or remedial efforts are probable, and the costs can be reasonably estimated. Generally, the timing of these accruals coincides with completion of a feasibility study or the Company's commitment to a formal plan of action.

Interest rate swap, foreign currency forward exchange and foreign currency swap agreements are entered into to manage the Company's exposure to changes in interest and foreign currency exchange rates.

- Changes in the amount to be received or paid under interest rate swap agreements are recognized in Interest and Other Financial Charges.
- Changes in the market value of foreign currency forward exchange and foreign currency swap contracts are recognized in Other Income/Expense or Cumulative Foreign Exchange Translation Adjustment, as appropriate, when foreign currency exchange rates fluctuate. Such changes mitigate the impact of foreign exchange fluctuations on foreign currency denominated transactions, assets and liabilities.

Income taxes are based on pretax financial statement income with an appropriate deferred tax provision in accordance with Accounting Principles Board Opinion No. 11 to provide for the tax effect of timing differences between pretax financial statement income and taxable income per the tax return. Deferred income taxes have not been provided on approximately $200 million of undistributed earnings of foreign affiliated companies, which are considered to be permanently reinvested. Any U.S. taxes payable on foreign earnings which may be remitted, however, will be substantially offset by foreign tax credits.

Note 2. Streamlining and Restructuring

The 1988 provision reflects a pretax charge of $197 million (after-tax $125 million, or $.83 a share) covering costs for the streamlining and rationalization of facilities of the Company and environmental expenditures. The provision covers the expenditures for a cost-cutting program, which includes the elimination of some 1,500 jobs and the relocation and consolidation of facilities and functions as well as environmental expenditures for shutdown chemical facilities.

Note 3. Other Income/Expense

Years ended December 31	1990	1989	1988
Interest income and other	$ 12	$ 38	$ 32
Repurchase of debentures	11	(1)	(4)
Gain on sale of investment (1)	—	—	61
Dividends from oil and gas investment	41	41	41
Foreign exchange (loss)	(15)	(12)	(25)
	$ 49	$ 66	$105

(1) In 1988, on an after-tax basis, the gain on the sale of the Company's investment in Akebono Brake Industry Company Ltd. was $36 million, or $.24 a share.

At December 31, 1990, the Company had forward exchange contracts to purchase and sell foreign currencies aggregating $281 and $682 million, respectively, based upon current spot rates. Such contracts mature through 1994.

Note 4. Nonrecurring Items

The 1988 nonrecurring items of $165 million (after-tax $81 million, or $.54 a share) reflect the gains from the sale of the automotive electronics business and from the formation of a joint venture between the Company and Union Carbide Corporation (Union Carbide).

Note 5. Interest and Other Financial Charges

Years ended December 31	1990	1989	1988
Total interest and other financial charges	$300	$341	$338
Less — Capitalized interest	(22)	(25)	(20)
	$278	$316	$318

At December 31, 1990, the Company had interest rate swap agreements, maturing through 1999, having a total notional principal of $341 million. These agreements have effectively changed the interest rates on $265 million of fixed rate debt (average 9.79 percent) to London Interbank Offered Rate (LIBOR) based floating rate (average 8.80 percent) and $76 million of LIBOR based floating rate debt (average 7.34 percent) to fixed rate debt (average 8.18 percent).

Note 6. Taxes on Income

Income before taxes on income

Years ended December 31	1990	1989	1988
Continuing operations	$501	$696	$633
Discontinued operations	—	—	(35)
Equity income	101	73	6
	$602	$769	$604

Years ended December 31	1990	1989	1988
United States:			
Continuing operations	$451	$536	$418
Discontinued operations	—	—	(35)
Foreign	151	233	221
	$602	$769	$604

Taxes on income

Years ended December 31	1990	1989	1988
Continuing operations	$140	$241	$176
Discontinued operations	—	—	(35)
	$140	$241	$141

Years ended December 31	1990	1989	1988
United States:			
Continuing operations	$103	$161	$ 89
Discontinued operations	—	—	(35)
Foreign	37	80	87
	$140	$241	$141

Years ended December 31	1990	1989	1988
Taxes on income consist of:			
Current:			
United States	$ 52	$ 78	$103
State	17	17	13
Foreign	54	77	82
	123	172	198
Deferred:			
United States	15	33	(92)
State	19	33	30
Foreign	(17)	3	5
	17	69	(57)
	$140	$241	$141

Years ended December 31	1990	1989	1988
The principal items accounting for the difference in taxes on income computed at the U.S. statutory rate and as recorded on an overall basis are as follows:			
Statutory U.S. federal income tax rate	34.0%	34.0%	34.0%
Taxes on foreign earnings over (under) U.S. tax rate	(7.8)	1.6	1.6
Rate and basis adjustment on dispositions	(3.4)	(6.7)	(13.8)
Nondeductible amortization and depreciation	3.7	2.9	4.5
State income taxes	4.3	4.7	4.7
Tax benefits of Foreign Sales Corporation	(4.5)	(1.5)	(1.7)
Dividends received deduction	(2.2)	(1.6)	(1.8)
Tax on partnership equity income	4.8	.6	—
All other items – net	(1.0)	.6	.3
Effective tax rate for continuing operations	27.9	34.6	27.8
Equity income and discontinued operations	(4.6)	(3.3)	(4.5)
	23.3%	31.3%	23.3%

At December 31, 1990, the Company had $32 million of general business tax credits and $31 million of alternative minimum tax credit carryforwards available for offset against future income tax payments on a tax return basis. The general business tax credit carryforwards are available to reduce income tax payments through the year 2004. The alternative minimum tax credit carryforward is available to reduce future tax payments for an indefinite period of time.

Years ended December 31	1990	1989	1988
The principal items in the deferred tax provision are as follows:			
Accelerated depreciation	$ 30	$ 35	$ 63
Tax credits	(13)	14	(15)
Discontinued operations, nonrecurring items and acquisitions	(13)	(30)	(11)
Installment sales	—	(5)	(26)
Pension and savings plans	(17)	30	18
Interest expense	14	(5)	(11)
Alternative minimum tax credit carryforward	2	(9)	(24)
Henley related	—	—	(100)
State income taxes	19	33	30
All other items – net	(5)	6	19
	$ 17	$ 69	$ (57)

Note 7. Accounts and Notes Receivable

December 31	1990	1989
Trade	$1,296	$1,320
Other	183	150
	1,479	1,470
Less — Allowance for doubtful accounts and refunds	(27)	(27)
	$1,452	$1,443

Note 8. Inventories

December 31	1990	1989
Raw materials	$ 705	$ 625
Work in process	935	1,066
Finished products	968	885
Supplies and containers	52	52
	2,660	2,628
Less —		
Progress payments	(339)	(415)
Reduction to LIFO cost basis	(153)	(150)
	$2,168	$2,063

Inventories valued at LIFO amounted to $326 million at December 31, 1990, and $348 million at December 31, 1989, which amounts were below estimated replacement cost by $153 and $150 million, respectively.

Note 9. Other Current Assets

December 31	1990	1989
Current – deferred taxes	$215	$210
Other	99	110
	$314	$320

Note 10. Investments and Long-term Receivables

December 31	1990	1989
Oil and gas investment	$ 509	$473
Other affiliates	523	375
Long-term receivables	107	148
	$1,139	$996

The Company has a 50 percent partnership interest in two joint ventures accounted for under the equity method, UOP and Paxon Polymer Company. The UOP joint venture is in the process technology and catalyst business while the Paxon joint venture manufactures and sells high-density polyethylene resins. The Company's share of the equity of the joint ventures exceeds its carrying value for these investments by $276 million, which is being amortized over the remaining useful lives of the related assets.

Combined selected financial data for these two entities are summarized as follows:

Year ended December 31	1990(a)
Net sales	$1,078
Income from operations	137
Net income (b)	145

December 31	1990
Current assets	$ 805
Total assets	1,848
Current liabilities	221
Noncurrent liabilities	269
Preferred capital	238
Equity	1,120

(a) Paxon Polymer Company was formed as an equally owned joint venture with Exxon Corporation (Exxon) effective July 1, 1990.
(b) No taxes have been provided by the entities on partnership income as the individual partners are responsible for their proportionate share of U.S. taxes payable.

Note 11. Property, Plant & Equipment

December 31	1990	1989
Land and land improvements	$ 312	$ 305
Machinery and equipment	4,183	3,776
Buildings	974	892
Office furniture and equipment	476	392
Transportation equipment	138	126
Construction in progress	352	312
	6,435	5,803
Less — Accumulated depreciation and amortization	(2,851)	(2,482)
	$ 3,584	$ 3,321

Note 12. Accrued Liabilities

December 31	1990	1989
Current taxes payable	$ 167	$ 291
Wages	313	284
Insurance	156	162
Customer advance payments/deposits	145	149
Other	690	789
	$1,471	$1,675

Note 13. Long-term Debt and Credit Agreement

December 31	1990	1989
Commercial paper, average 8.23%	$ 125	$ —
Revolving credit agreement, 8.3125%	125	—
Employee stock ownership floating rate notes, 6.6%–7.99%, due 1994–1996	296	211
9⅞% sinking fund debentures due December 15, 1997	148	173
9⅞% debentures due June 1, 2002	250	250
8% subordinated exchangeable debentures due January 15, 1997–2009(a)	63	80
Zero coupon bonds and notes, 12.95%–13.899%, due 1992–2009	278	257
	1,285	971
Capitalized lease obligations, 5.75%–17.1%, maturing at various dates through 2016	92	103
Foreign currency bonds:		
Japanese Yen 6¾% bonds:		
Yen 10,000,000,000 due 1991	—	70
Yen 20,000,000,000 due 1993 (b)	147	139
Deutsche Mark 125,000,000 7½% bonds due 1994 (c)	84	74
Swiss Franc 95,000,000 (1990) 100,000,000 (1989) 6% bonds due 1994 (d)	75	65
	306	348
Industrial development bond obligations, 5.5%–14.0%, maturing at various dates through 2014	119	122
Other long-term debt, 5.0%–18.5%, maturing at various dates through 2016	253	365
Sub-total	2,055	1,909
Less — Unamortized discount	(4)	(6)
	$2,051	$1,903

(a) The eight percent debentures are exchangeable for Unitrode Corporation common stock at a conversion price of $40 per share of common stock of Unitrode or, at the Company's option, for Allied-Signal common stock of equivalent market value or cash.
(b) The Company has a foreign currency swap agreement to hedge total payments on the bonds, which results in a $115 million obligation at an effective fixed interest rate of 9.24 percent.
(c) The Company has foreign currency and interest rate swap agreements to hedge principal and interest payments, which result in a 67 million Dutch Guilder ($39 million) obligation and in a $41 million obligation with effective floating interest rates of 8.8125 and 8.0625 percent, respectively.
(d) The Company has a foreign currency and interest rate swap agreement to hedge principal and interest payments, which results in a 126 million Dutch Guilder ($74 million) obligation with an effective floating interest rate of 8.46 percent.

The schedule of principal payments on long-term debt is as follows:

At December 31, 1990	Long-term Debt(1)
1991	$ 133
1992	149
1993	200
1994	249
1995	195
Thereafter	1,258
	2,184
Less — Current portion	(133)
	$2,051

(1) Amounts are net of repurchases.

In October 1988, the Company negotiated a new eight-year $1.2 billion revolving credit agreement (Credit Agreement) with a group of 17 banks. The funds available under the Credit Agreement may be used for any corporate purpose. The principal amounts of such loans are required to be repaid no later than September 30, 1994, or may be converted to term loans to be repaid in semi-annual installments through September 30, 1998. Annually, the Company may request that the maturity of the revolving credit and the term loan be extended by another year. The Company has agreed to pay a commitment fee of ¼ of 1 percent per annum on the first $484 million of the commitment and ⅛ of 1 percent on the balance of the unutilized commitment.

Interest is payable at the average floating base rate of two reference banks or is payable at a rate which is, for the first three years of the Credit Agreement, no greater than ⅜ of 1 percent over the average LIBOR of three out of five reference banks. The Company had a total of $500 million outstanding under the Credit Agreement at December 31, 1990. It has also served as support for issuance of commercial paper and notes under the Company's Employee Stock Ownership funding program. At December 31, 1990, the Company had outstanding $125 million of commercial paper and $125 million of Credit Agreement borrowings, which it intends to refinance or rollover on a long-term basis.

Note 14. Lease Commitments

Future minimum lease payments under operating leases having initial or remaining noncancellable lease terms in excess of one year are as follows:

At December 31, 1990	Lease Payments
1991	$ 97
1992	71
1993	53
1994	44
1995	40
Thereafter	309
Total	$614

Rent expense of $152, $163 and $164 million was included in costs and expenses for 1990, 1989 and 1988, respectively.

Note 15. Capital Stock

The Company is authorized to issue up to 20,000,000 shares of preferred stock without par value and may establish series of preferred stock having such number of shares and such terms as it may determine.

The Company is authorized to issue up to 500,000,000 shares of common stock, with a par value of one dollar. Common shareholders are entitled to receive such dividends as may be declared by the Board of Directors (the Board), are entitled to one vote per share, and are entitled, in the event of liquidation, to share ratably in all the assets of the Company which are available for distribution to the common shareholders. Common shareholders do not have preemptive or conversion rights. Shares of common stock issued and outstanding or held in the treasury are not liable to further calls or assessments. There is no restriction on dividends or the repurchase or redemption

of common stock by the Company. The Company has remaining authority to repurchase from time to time up to 14.3 million shares of common stock.

Each share of common stock is accompanied by a share purchase right (a Right) which entitles shareholders to buy one newly issued share of common stock at an exercise price of $150, subject to adjustment. The Rights will be exercisable only if a person or group acquires stock representing 20 percent or more of the power to vote generally in the election of directors (becomes an acquiring person) or announces a tender or exchange offer which would result in such person or group becoming an acquiring person. Upon exercise after a person or a group becomes an acquiring person, each Right (other than Rights held by the acquiring person) will entitle the holder to purchase a number of shares of common stock of the Company having a market value of two times the exercise price. If the Company is acquired in a merger or other business combination, each Right will entitle the holder to purchase, at the then exercise price, a number of shares of common stock of the acquiring company having a market value of two times such exercise price. If circumstances warrant, the Board may decrease from 20 percent to as low as 15 percent the threshold used in determining when a person or group becomes an acquiring person or the conditions of exercise of the Rights, provided that the Board may not reduce the thresholds to or below the existing level of ownership of a shareholder. The Rights are redeemable at the Company's option at five cents per Right prior to a person or group's becoming an acquiring person. The Rights will expire on June 9, 1996, unless earlier redeemed. The Company has reserved approximately 154 million shares of common stock for issuance upon the exercise of the Rights.

	Shares Outstanding (in millions)	Common Stock/ Paid-in Capital	Treasury Stock
Balance December 31, 1987	149.9	$2,747	$(1,150)
Purchased under repurchase programs	(5.5)	—	(183)
Used for Dividend Reinvestment Plan	.3	—	11
Used for employee benefit plans	3.3	—	141
Balance December 31, 1988	148.0	2,747	(1,181)
Purchased under repurchase programs	(5.8)	—	(208)
Used for Dividend Reinvestment Plan	.2	—	10
Used for employee benefit plans	2.6	—	113
Balance December 31, 1989	145.0	2,747	(1,266)
Purchased under repurchase programs	(13.4)	—	(452)
Used for Dividend Reinvestment Plan	.3	—	12
Used for employee benefit plans	2.8	—	128
Balance December 31, 1990	134.7	$2,747	$(1,578)

Note 16. Stock Options and Awards

Under the amended 1985 Stock Plan for Employees, the Company may grant incentive and non-qualified stock options, stock appreciation rights (SARs), restricted shares and restricted units (Units) to officers and other employees up to a maximum of 19,000,000 shares of Company common stock. SARs entitle an optionee to surrender unexercised stock options for cash or stock equal to the excess of the fair market value of the surrendered shares over the option value of such shares. Units have been granted to certain employees, which entitle the holder to receive shares of common stock or equivalent cash payments. At December 31, 1990, there were 508,157 Units outstanding, including 120,731 Units granted in 1990, the restrictions on which generally lapse over periods not exceeding eight years from date of grant. Incentive stock options have a term determined by the Compensation Committee of the Board (Committee), but not in excess of ten years. Non-qualified stock options have been granted with terms of ten years and one day. An option becomes exercisable at such times and in such installments as set by the Committee. Options generally become exercisable over a three-year period.

Under various plans of former subsidiaries merged into the Company, key employees have been granted common stock options, generally for terms of ten years, which become exercisable in installments over the first three years. No additional options may be granted under these plans.

Of the 9,156,790 shares covered by outstanding options under the plans at December 31, 1990, 2,049,294 were accompanied by SARs.

Stock options	Number of Shares
Outstanding at December 31, 1987	5,205,209
Granted at $31.19–$36.13 per share	2,614,158
Less —	
Exercised at $9.61–$34.01 per share	63,949
Lapsed or cancelled	1,300,456
Outstanding at December 31, 1988	6,454,962
Granted at $34.75–$37.69 per share	2,364,850
Less —	
Exercised at $10.83–$34.01 per share	144,995
Lapsed or cancelled	1,406,874
Surrendered upon exercise of SARs	11,232
Outstanding at December 31, 1989	7,256,711
Granted at $27.50–$36.38 per share	2,436,275
Less —	
Exercised at $13.42–$34.75 per share	120,867
Lapsed or cancelled	400,329
Surrendered upon exercise of SARs	15,000
Outstanding at December 31, 1990, $20.24–$46.82 per share	9,156,790
Exercisable at December 31, 1990	4,483,019
Available for grant at December 31, 1989	10,991,257
Available for grant at December 31, 1990	8,979,734

All options were granted at not less than fair market value at dates of grant.

Treasury shares of common stock have been used upon exercise of stock options. Differences between the cost of treasury stock used and the total option price of shares exercised have been charged to retained earnings.

The Company also has a Restricted Stock Plan for Non-Employee Directors, under which each non-employee director received a one-time grant of 1,500 shares of common stock, subject to certain restrictions.

Note 17. Cumulative Foreign Exchange Translation Adjustment

December 31	1990	1989	1988
Balance at beginning of year	$ 8	$ 31	$ 29
Translation adjustment and impact of hedges and intercompany balances	88	(23)	18
Income taxes (benefit) related to hedges and intercompany balances	2	—	(10)
Dispositions	—	—	(6)
	$98	$ 8	$ 31

Note 18. Commitments and Contingencies

The Company is subject to a number of investigations, lawsuits and claims (some of which involve substantial amounts) arising out of the conduct of its business, including those relating to commercial transactions, government contracts, product liability and environmental, safety and health matters. In accordance with the Company's accounting policy described in Note 1 of Notes to Financial Statements, generally liabilities are recorded for environmental matters following the completion of feasibility studies. Although the Company does not currently possess sufficient information to reasonably estimate the amounts of the liabilities to be recorded as a result of pending studies, they may be significant to the consolidated results of operations. While the ultimate results of investigations, lawsuits and claims involving the Company cannot be determined, management does not expect that these matters will have a material adverse effect on the consolidated financial position of the Company.

The Company has issued or is a party to various direct and indirect guarantees, bank letters of credit and customer guarantees. Additionally, on behalf of The Henley Group, Inc. and Resco Holdings Inc. (formerly an affiliated business of Henley), the Company has issued financial, contract performance and project completion guarantees aggregating $423 million. Such guarantees also relate to their affiliates and subsidiaries covering performance and repayments of debt. However, the Company is indemnified by Resco Holdings Inc. and Wheelabrator Investments Inc. (an affiliated business of Resco) for any payments which the Company may be required to make under these obligations. Management does not expect these guarantees will have a material adverse effect on the consolidated financial position of the Company.

Note 19. Supplemental Cash Flow Information

Cash payments during the years 1990, 1989 and 1988 included interest of $251, $245 and $258 million and income taxes of $184, $198 and $134 million, respectively.

In July 1990, the Company contributed its high-density polyethylene business and its partner, Exxon, contributed cash to a newly formed, equally owned joint venture. The transaction had the following non-cash impact on the Company's 1990 balance sheet:

	Amount
Current assets	$ (29)
Property, plant and equipment – net	(77)
Investments and long-term receivables	60
Current liabilities	46

Debt assumed by the purchasers of businesses in 1988 was approximately $52 million.

In May 1988, the Company formed a process technology and catalyst joint venture with Union Carbide. The joint venture was formed by each of the companies contributing the assets and the joint venture assuming the liabilities of both companies' business units in exchange for a 50 percent interest. In addition, the Company received consideration which reflects the difference in the value of the Company's business compared to that of Union Carbide. As a result of the transactions, the Company recorded an after-tax gain of $24 million, or $.16 a share, based on the recorded amount of the business contributed. The transactions had the following non-cash impact on the Company's 1988 balance sheet:

	Amount
Current assets	$ (94)
Property, plant and equipment – net	(71)
Investments and long-term receivables	253
Intangible assets	(129)
Current liabilities	41

Note 20. Pension and Other Postretirement Benefits

The Company's pension plans, most of which are defined benefit plans and almost all of which are noncontributory, cover substantially all employees. Benefits under the plans are generally based on years of service and employees' compensation during the last years of employment or a flat dollar benefit. Benefits are generally paid from funds previously provided to trustees. In the Company's principal U.S. plans, funds are contributed to a trustee as necessary to provide for current service and for any unfunded projected benefit obligation over a reasonable period. To the extent that these requirements are fully covered by assets on hand, a contribution may not be made in a particular year. As of year-end 1990, approximately 47 percent of the assets of U.S. plans were held in equity securities, with the balance primarily in fixed income-type securities.

Pension expense in 1990, 1989 and 1988 was $78, $77 and $82 million, respectively. The Company adopted the provisions of Financial Accounting Standards Board (FASB) Statement No. 87 — "Employers' Accounting for Pensions" (FASB No. 87) for certain foreign defined benefit plans effective January 1, 1989, the impact of which was immaterial. The Company uses the services of an enrolled actuary to calculate the amount of pension expense and contributions to trustees of the various pension plans.

Net periodic pension cost for 1990, 1989 and 1988 included the following components:

	1990	1989	1988
Service cost – benefits earned during the period	$ 105	$ 94	$ 94
Interest cost on projected benefit obligation	326	318	322
Actual return on plan assets	46	(528)	(565)
Net amortization and deferral	(408)	184	210
Net periodic pension cost for defined benefit plans	69(a)	68(a)	61
Foreign plans and other	9	9	21(a)
Net periodic pension cost	$ 78	$ 77	$ 82

(a) Includes pension expense for certain foreign pension plans in 1990 and 1989, reflecting the adoption of FASB No. 87 in 1989, which expenses are reported in "Foreign plans and other" for 1988.

The assumed rate of return for the Company's U.S. defined benefit pension plans was nine percent in 1990, 1989 and 1988. The assumed discount rate used in calculating the projected benefit obligations at December 31, 1990, 1989 and 1988 was 8.75 percent, 8.5 percent and nine percent, respectively. In addition, the assumed annual increase in compensation over employees' estimated remaining working lives was 5.5 percent for each of the respective years.

Presented below are the plans' funded status and amounts recognized in the Company's Consolidated Balance Sheet at December 31, 1990 and 1989, for its significant defined benefit pension plans:

	1990		1989	
December 31	Assets Exceed Accumulated Benefits	Accumulated Benefits Exceed Assets	Assets Exceed Accumulated Benefits	Accumulated Benefits Exceed Assets
Actuarial present value of benefit obligation:				
Vested	$1,969	$1,676	$2,236	$1,305
Nonvested	142	109	217	104
Accumulated benefit obligation	$2,111	$1,785	$2,453	$1,409
Projected benefit obligation	$2,424	$1,929	$2,835	$1,499
Less — Fair value of assets	2,777	1,618	3,345	1,303
Over (under) funded plans	353	(311)	510	(196)
Unrecognized transition (asset)	(44)	(32)	(31)	(50)
Unrecognized net (gain) loss	51	131	(108)	15
Unrecognized prior service cost	15	32	16	37
Tax effect of pension (asset) liability relating to purchase accounting	(94)	53	(104)	58
Prepaid (accrued) pension cost	$ 281	$ (127)	$ 283	$ (136)

In addition to providing pension benefits, the Company provides other postretirement benefits (i.e., health care and life insurance benefits) for employees. Substantially all of the Company's employees may become eligible for those benefits if they reach normal retirement age while working for the Company. The cost of retiree health care and life insurance benefits are expensed as paid. In 1990, 1989 and 1988 the Company's cost for providing other postretirement benefits aggregated $109, $99 and $81 million, respectively.

In December 1990, the FASB issued Statement No. 106 — "Employers' Accounting for Postretirement Benefits Other Than Pensions" (FASB No. 106) which requires the Company to change the timing of recognizing the cost of the postretirement benefits provided to employees from the current cash to the accrual method of accounting by 1993. Currently, the Company is unable to quantify the impact of FASB No. 106 on its results of operations and financial position, although FASB No. 106 is expected to have a significant adverse effect in the year of adoption. Such impact will depend on medical inflation rates and the level of benefits provided by the Company's benefit plans in the future.

Note 21. Geographic Areas — Financial Data

		United States(1)	Canada	Europe	Other Int'l.	Adjust. and Elim.	Total
Net sales (2)	1990	$9,395	$341	$2,002	$605	$ —	$12,343
	1989	9,339	382	1,663	558	—	11,942
	1988	9,169	452	1,738	550	—	11,909
Net income	1990	399	13	48	2	—	462
	1989	391	21	88	28	—	528
	1988	340	18	70	35	—	463
Assets	1990	8,658	212	1,800	469	(683)	10,456
	1989	8,509	204	1,423	439	(233)	10,342
	1988	8,214	236	1,292	455	(128)	10,069
Liabilities	1990	6,124	149	1,253	233	(683)	7,076
	1989	5,992	129	840	202	(233)	6,930
	1988	5,778	127	817	224	(145)	6,801

Sales between geographic areas approximate market and are not significant.
(1) Corporate Office income, expenses, assets and liabilities are included in the United States column.
(2) Included in United States net sales are export sales of $1,838, $1,692 and $1,464 million for each of the respective years.

Note 22. Oil and Gas Investment

The Company has approximately a 39 percent interest in the common stock (market value at December 31, 1990 and 1989 of $504 and $604 million, respectively) of Union Texas Petroleum Holdings, Inc. (Union Texas) and accounts for this investment using the equity method. The Company also has an investment in Union Texas' preferred stocks and warrants to purchase Union Texas' common stock (Warrants) in certain circumstances. In connection with a proposal to sell Union Texas and to satisfy an existing agreement, the Company transferred 1.45 million of the Company's 3 million Warrants to partnerships controlled by Kohlberg Kravis Roberts & Co., who also are major shareholders of Union Texas.

Selected financial data for Union Texas are summarized as follows:

Years ended December 31	1990	1989	1988
Net sales	$1,283	$981	$1,073
Income from operations	269	247	332
Net income	116	173	109

December 31	1990	1989
Current assets	$ 502	$ 312
Total assets	2,098	1,721
Current liabilities	388	320
Long-term debt	686	534
Redeemable preferred stock	275	275
Shareholders' equity	375	275

The oil and gas activities of Union Texas are accounted for employing the successful efforts method of accounting as defined by the Financial Accounting Standards Board and as outlined in the Securities and Exchange Commission's accounting rules and releases. Costs of unsuccessful exploratory wells are expensed when determined to be non-productive. Production costs, overhead and all exploration costs other than costs for exploratory drilling are charged to expenses as incurred.

Net quantities of proved reserves at December 31, 1990, 1989 and 1988 and the operating results for the years then ended relating to the Company's approximate 39 percent interest in Union Texas' oil and gas producing operations are shown in the following tables (unaudited):

		Oil — Million Barrels						Natural Gas — Billion Cubic Feet				
		U.S.(1)	United Kingdom	Indonesia	Pakistan	Other Int'l.(2)	Total	U.S.(1)	United Kingdom	Indonesia	Pakistan	Total
Proved developed and undeveloped reserves	1990	11	32	6	3	2	54	166	34	460(3)	45	705
	1989	12	31	6	3	3	55	230	36	491(4)	40	797
	1988	12	24	7	2	4	49	225	37	556(4)	37	855

		U.S.(1)	United Kingdom	Indonesia	Pakistan	Other Int'l.	Total
Costs incurred in oil and gas property acquisition, exploration and development activities	1990	$ 58	$ 65	$ 32	$ 4	$ 6	$ 165
	1989	50	21	25	6	2	104
	1988	75	15	19	5	3	117
Aggregate amount of capitalized costs (including construction in progress) for proved and unproved properties	1990	425	321	276	18	13	1,053
	1989	544	217	261	16	23	1,061
	1988	554	222	245	12	24	1,057
Results of operations	1990	—	23	42	6	(4)	67
	1989	—	12	30	3	—	45
	1988	3	20	26	2	(3)	48
Standardized measure of discounted future net cash flows	1990	243	257	390	42	12	944
	1989	246	161	220	27	5	659
	1988	225	145	134	14	11	529

(1) Includes amounts (for reserves of —, 1 and 1 million barrels and —, 61 and 62 billion cubic feet for 1990, 1989 and 1988, respectively) for an equity partnership of Union Texas which was sold in 1990.
(2) Reserve information relates to a service contract operation in Argentina under which Union Texas is paid a fee based on production.
(3) Includes reserves that require the further expansion of the liquefied natural gas facilities.
(4) Includes reserves that required the negotiation of additional sales agreements and required the expansion of liquefied natural gas facilities (completed in 1989).

Note 23. Segment Financial Data

		Aerospace	Automotive	Engineered Materials	Corporate and Unallocated(1)	Total
Net sales(2)	**1990**	**$5,358**	**$4,181**	**$2,786**	**$ 18**	**$12,343**
	1989	5,079	3,849	2,993	21	11,942
	1988	4,746	4,101	3,033	29	11,909
Research, development and engineering expense(3)	**1990**	**384**	**170**	**139**	**28**	**721**
	1989	306	149	122	26	603
	1988	311	174	120	42	647
Depreciation and amortization	**1990**	**140**	**143**	**129**	**14**	**426**
	1989	123	120	128	14	385
	1988	114	121	125	16	376
Income from operations(4)	**1990**	**498**	**166**	**287**	**(221)**	**730**
	1989	514	302	355	(225)	946
	1988	346	268	377	(310)	681
Net income(4)(5)	**1990**	**235**	**34**	**228**	**(35)**	**462**
	1989	225	114	245	(56)	528
	1988	119	99	222	23	463
Capital expenditures	**1990**	**230**	**222**	**214**	**9**	**675**
	1989	162	209	163	7	541
	1988	163	246	181	12	602
Identifiable assets	**1990**	**4,224**	**2,794**	**1,896**	**1,542**	**10,456**
	1989	4,335	2,619	1,879	1,509	10,342
	1988	4,351	2,582	1,839	1,297	10,069

Intersegment sales approximate market and are not significant.

(1) The "Corporate and Unallocated" column includes amounts for businesses sold, nonrecurring, discontinued and Corporate items. Net Income in 1988 includes nonrecurring gains relating to Automotive and Engineered Materials of $57 and $24 million, respectively. Also included in Net Income are amounts (including preferred dividends) for Union Texas, accounted for on the equity basis, of $59, $80 and $57 million for each of the respective years. Identifiable Assets include an investment in Union Texas of $509, $473 and $476 million, and other Corporate assets of $1,033, $1,036 and $821 million for each of the respective years.

(2) Sales to the U.S. government and its agencies, mainly for the Aerospace segment, were $1,373, $1,335 and $1,314 million for each of the respective years.

(3) Engineering activities totaled $295, $222 and $232 million for each of the respective years.

(4) Includes in 1988 a pre- and after-tax provision to cover streamlining and restructuring charges for Aerospace of $76 and $50 million, Automotive of $37 and $23 million, Engineered Materials of $23 and $14 million and Corporate and Unallocated of $61 and $38 million (including environmental expenditures of $22 and $14 million), respectively.

(5) An interest charge is made by Corporate Office to the segments on the basis of relative investment, taxes on income are generally included in the segments which gave rise to the tax effects and equity in income of affiliated companies is included in the segments in which these companies operate.

Note 24. Unaudited Quarterly Financial Information

					1990					1989
	Mar. 31	**June 30**	**Sept. 30**	**Dec. 31**	**Year**	Mar. 31	June 30	Sept. 30	Dec. 31	Year
Net sales	**$3,055**	**$3,184**	**$2,961**	**$3,143**	**$12,343**	$2,942	$3,115	$2,827	$3,058	$11,942
Gross profit	**568**	**559**	**497**	**493**	**2,117**	572	594	555	558	2,279
Net income	**129**	**121**	**105**	**107**	**462**	126	166(a)	121	115	528
Per share of common stock:										
Net earnings	**.90**	**.88**	**.76**	**.80**	**3.35**	.85	1.11	.81	.78	3.55
Dividends paid	**.45**	**.45**	**.45**	**.45**	**1.80**	.45	.45	.45	.45	1.80
Market price (composite tape)(b)										
High	**37.50**	**37.88**	**36.75**	**30.75**	**37.88**	35.50	35.50	40.38	38.63	40.38
Low	**32.50**	**34.25**	**27.25**	**24.88**	**24.88**	32.13	31.75	33.00	31.88	31.75

(a) In 1989, the second quarter includes equity income of $23 million, or $.16 a share, relating to Union Texas' business interruption insurance settlement.

(b) Primarily traded on The New York Stock Exchange.

Selected Financial Data

Allied-Signal Inc.

(Dollars in millions except per share amounts)

		Years ended December 31				
		1990	1989(a)	1988(a)	1987(a)	1986(a)
For the Year	Net sales	**$12,343**	$11,942	$11,909	$11,116	$ 9,888
	Income from continuing operations	**462**	528	463(b)	515(b)	539
	Net income	**462**	528	463	656	605
	Per share of common stock:					
	Earnings from continuing operations	**3.35**	3.55	3.10	3.07	2.89
	Net earnings	**3.35**	3.55	3.10	3.90	3.26
	Dividends:					
	Cash	**1.80**	1.80	1.80	1.80	1.80
	Special distribution	**—**	—	—	—	5.27(c)
	Total	**1.80**	1.80	1.80	1.80	7.07
At Year-End	Net working capital	**$ 892**	$ 1,065	$ 1,040	$ 722	$ 1,016
	Property, plant and equipment — net	**3,584**	3,321	3,214	3,330	3,514
	Total assets	**10,456**	10,342	10,069	10,321	11,286
	Long-term debt	**2,051**	1,903	2,044	2,017	2,127
	Preferred redeemable stock	**—**	—	—	—	52
	Capital stock and other shareholders' equity	**3,380**	3,412	3,268	3,129	3,686
	Book value per share of common stock	**25.10**	23.53	22.09	20.87	21.06
	Average investment(d)	**6,723**	6,520	6,629	6,859	6,272
	Number of common shares outstanding (in millions)	**134.7**	145.0	148.0	149.9	174.4
	Common shareholders	**97,210**	102,042	111,402	109,322	121,913
	Employees(e)	**105,800**	107,100	109,550	115,300	137,200
Financial Statistics(f)	Return on sales (after-tax)	**3.7**	4.4	3.2	4.6	5.5
	Return on average investment (after-tax)	**9.6**	11.0	9.0	10.1	10.9
	Return on average shareholders' equity (after-tax)	**13.9**	15.6	12.0	14.5	13.4
	Interest coverage ratio	**2.6**	3.0	2.3	3.6	3.8
	Long-term debt as a percent of total capital	**33.6**	30.8	33.2	33.9	33.0
	Total debt as a percent of total capital	**40.4**	35.7	35.9	39.0	40.8

(a) Reclassified for comparative purposes.
(b) Includes provisions for streamlining and restructuring and nonrecurring items for 1988 as discussed in Notes 2 and 4 of Notes to Financial Statements. Includes in 1987 the effect of the sale of common stock by Union Texas which resulted in the Company recording a gain of $108 million (after-tax $82 million, or $.49 a share), reflecting the Company's share of the increase in Union Texas' equity.
(c) Represents a special dividend, valued at $5.27 per share, relating to the Company's distribution of one common share of The Henley Group, Inc. for each four shares of the Company's common stock held as of May 16, 1986.
(d) Investment is defined as shareholders' equity, preferred redeemable stock and deferred taxes plus total debt.
(e) Includes employees at facilities operated for the U.S. Department of Energy.
(f) Excludes nonrecurring items.

Management Committee

Edward L. Hennessy, Jr.

Alan Belzer

John W. Day

Roy H. Ekrom

Frederic M. Poses

John W. Barter

Brian D. Forrow

Mary L. Good

David G. Powell

Donald J. Redlinger

James E. Sierk

James J. Verrant

Andrew B. Samet

Officers

Edward L. Hennessy, Jr.
Chairman of the Board and
Chief Executive Officer

Alan Belzer
President and
Chief Operating Officer

John W. Day
Executive Vice President and
President
Automotive

Roy H. Ekrom
Executive Vice President and
President
Allied-Signal Aerospace Co.

Frederic M. Poses
Executive Vice President and
President
Engineered Materials

John W. Barter
Senior Vice President and
Chief Financial Officer

Brian D. Forrow
Senior Vice President and
General Counsel

Mary L. Good
Senior Vice President
Technology

David G. Powell
Senior Vice President
Public Affairs

Donald J. Redlinger
Senior Vice President
Human Resources

James E. Sierk
Senior Vice President
Quality and Productivity

James J. Verrant
Senior Vice President and
President
Allied-Signal International

Edward W. Callahan
Vice President
Health, Safety and
Environmental Sciences

Kenneth W. Cole
Vice President
Government Relations

G. Peter D'Aloia
Vice President and
Treasurer

Andrew B. Samet
Vice President, Secretary and
Associate General Counsel

J. Thomas Zusi
Vice President and
Controller

Board of Directors

Edward L. Hennessy, Jr. [4]
Chairman of the Board and Chief Executive Officer Allied-Signal Inc.

Alan Belzer
President and Chief Operating Officer Allied-Signal Inc.

Edward J. Boling [1,6]
President Emeritus and University Professor The University of Tennessee

Jewel Plummer Cobb [3,7]
President and Professor of Biological Sciences, Emeritus California State University, Fullerton

Eugene E. Covert [3,7]
Professor Aeronautics and Astronautics Massachusetts Institute of Technology

Donald W. Davis [5,6,7]
Chairman of the Executive Committee The Stanley Works (tools and hardware)

William R. Haselton [1,2]
Retired Vice Chairman Champion International Corporation (paper and forest products)

Gen. Paul X. Kelley [1,3,7]
U.S. Marine Corps, Retired Vice Chairman for Corporate Strategy Cassidy and Associates, Inc. (government relations firm)

Robert D. Kilpatrick [2,3,4,5,6]
Retired Chairman of the Board CIGNA Corporation (insurance and finance)

Robert P. Luciano [2,5]
Chairman and Chief Executive Officer Schering-Plough Corporation (pharmaceuticals and consumer products)

Russell E. Palmer [1,3,6]
Chairman and Chief Executive Officer The Palmer Group (private investment firm)

Lt. Gen. Thomas P. Stafford [3,7]
U.S. Air Force, Retired Consultant General Technical Services, Inc. (consulting firm)

Delbert C. Staley [2,4,5,7]
Retired Chairman and Chief Executive Officer NYNEX Corporation (telecommunications)

Rawleigh Warner, Jr. [2,4,5,6]
Retired Chairman and Chief Executive Officer Mobil Corporation (petroleum and chemicals)

Robert C. Winters [1,2,6]
Chairman and Chief Executive Officer The Prudential Insurance Company of America (insurance and financial services)

(Numbers next to each Director's name refer to the Committees on which he or she serves.)

Committees of the Board

[1] **Audit Committee**
Russell E. Palmer, Chairman

[2] **Management Development and Compensation Committee**
Delbert C. Staley, Chairman

[3] **Corporate Responsibility Committee**
Robert D. Kilpatrick, Chairman

[4] **Executive Committee**
Edward L. Hennessy, Jr., Chairman

[5] **Nominating and Board Affairs Committee**
Rawleigh Warner, Jr., Chairman

[6] **Retirement Plans Committee**
Donald W. Davis, Chairman

[7] **Technology Committee**
Thomas P. Stafford, Chairman

Shareholder Information

Annual Meeting

The Annual Meeting of Shareholders will be held at 10 a.m. on Monday, April 29, 1991, at Allied-Signal's corporate headquarters, 101 Columbia Road, Morris Township, New Jersey.

Dividend/Other Shareholder Matters

Allied-Signal's Dividend Reinvestment Plan provides for the automatic reinvestment of Common Stock dividends at market price. Participants also may add cash for the purchase of additional shares of Common Stock without payment of any brokerage commission or service charge.

For more information about the plan or for answers to questions about dividend checks, stock transfers or other Shareholder matters, write or call:

Shareholder Relations
Allied-Signal Inc.
P. O. Box 50000
Morristown, New Jersey
07962-5000

In New Jersey call
(201) 455-2127 collect
Outside New Jersey call
1 (800) 255-4332

Form 10-K

Shareholders may request a copy of Form 10-K, which the Corporation files with the Securities and Exchange Commission, by contacting:

Corporate Publications
Allied-Signal Inc.
P. O. Box 2245
Morristown, New Jersey
07962-2245

Stock Exchange Listings

Allied-Signal's Common Stock is listed on the New York, Midwest and Pacific Stock Exchanges under the symbol ALD. It is also listed on the Amsterdam, Basel, Frankfurt, Geneva, London, Paris, Tokyo and Zurich Stock Exchanges.

Transfer Agent/Registrar

The Bank of New York
101 Barclay Street
New York, New York 10286

Brand Names/ Trademarks

Throughout this *1990 Annual Report* product and service references in *italics* with Initial Capitals represent trademarks, service marks or brand names owned by or associated with Allied-Signal Inc.

Printed in USA

Allied-Signal Inc.
P.O. Box 2245
Morristown, New Jersey 07962-2245

21

BY-LAWS
OF
ALLIED-SIGNAL INC.

As amended
through December 14, 1990

041006

TABLE OF CONTENTS

	Page
ARTICLE I—OFFICES	1
Section 1. Registered Office	1
Section 2. Other Offices	1
ARTICLE II—MEETINGS OF STOCKHOLDERS	1
Section 1. Place of Meetings	1
Section 2. Annual Meetings	1
Section 3. Special Meetings	1
Section 4. Notice of Meetings	1
Section 5. Quorum	1
Section 6. Order of Business	1
Section 7. Voting	1
Section 8. Inspectors	2
ARTICLE III—DIRECTORS	2
Section 1. Powers	2
Section 2. Number, Election and Terms	2
Section 3. Nomination of Directors; Election	2
Section 4. Place of Meetings	3
Section 5. Regular Meetings	3
Section 6. Special Meetings	3
Section 7. Notice of Meetings	3
Section 8. Quorum and Manner of Acting	3
Section 9. Resignation	3
Section 10. Removal of Directors	4
Section 11. Compensation of Directors	4
ARTICLE IV—COMMITTEES OF THE BOARD	4
Section 1. Appointment and Powers of Executive Committee	4
Section 2. Appointment and Powers of Audit Committee	4
Section 3. Other Committees	4
Section 4. Action by Consent; Participation by Telephone or Similar Equipment	5
Section 5. Changes in Committees; Resignations; Removals	5
ARTICLE V—OFFICERS	5
Section 1. Number and Qualifications	5
Section 2. Resignations	5
Section 3. Removal	5
Section 4. Vacancies	6
Section 5. Chairman of the Board	6
Section 6. Vice Chairman of the Board	6
Section 7. Chief Executive Officer	6
Section 8. President	6
Section 9. Vice Presidents	6
Section 10. General Counsel	6
Section 11. Treasurer	6
Section 12. Secretary	6
Section 13. Controller	6
Section 14. Bonds of Officers	7
Section 15. Compensation	7

Page

Section 16. Officers of Operating Companies or Divisions 7
ARTICLE VI—CONTRACTS, CHECKS, LOANS, DEPOSITS, ETC. 7
Section 1. Contracts 7
Section 2. Checks, etc. 7
Section 3. Loans 7
Section 4. Deposits 7
ARTICLE VII—CAPITAL STOCK 7
Section 1. Stock Certificates 7
Section 2. List of Stockholders Entitled to Vote 8
Section 3. Stock Ledger 8
Section 4. Transfers of Capital Stock 8
Section 5. Lost Certificates 8
Section 6. Fixing of Record Date 8
Section 7. Registered Owners 8
ARTICLE VIII—FISCAL YEAR 9
ARTICLE IX—SEAL 9
ARTICLE X—WAIVER OF NOTICE 9
ARTICLE XI—AMENDMENTS 9
ARTICLE XII—EMERGENCY BY-LAWS 9
Section 1. Emergency Board of Directors 9
Section 2. Membership of Emergency Board of Directors 9
Section 3. Powers of the Emergency Board 10
Section 4. Stockholders' Meeting 10
Section 5. Emergency Corporate Headquarters 10
Section 6. Limitation of Liability 10

BY-LAWS
OF
ALLIED-SIGNAL INC.

ARTICLE I

OFFICES

SECTION 1. *Registered Office.* The registered office of Allied-Signal Inc. (hereinafter called the Corporation) within the State of Delaware shall be in the City of Wilmington, County of New Castle.

SECTION 2. *Other Offices.* The Corporation may also have an office or offices and keep the books and records of the Corporation, except as may otherwise be required by law, in such other place or places, either within or without the State of Delaware, as the Board of Directors of the Corporation (hereinafter called the Board) may from time to time determine or the business of the Corporation may require.

ARTICLE II

MEETINGS OF STOCKHOLDERS

SECTION 1. *Place of Meetings.* All meetings of Stockholders of the Corporation shall be held at the registered office of the Corporation in the State of Delaware or at such other place, within or without the State of Delaware, as may from time to time be fixed by the Board or specified or fixed in the respective notices or waivers of notice thereof.

SECTION 2. *Annual Meetings.* The annual meeting of Stockholders of the Corporation for the election of directors and for the transaction of any other proper business shall be held at 10:00 a.m. on the last Monday of April of each year, or on such other date and at such other time as may be fixed by the Board. If the annual meeting for the election of directors shall not be held on the day designated, the Board shall cause the meeting to be held as soon thereafter as convenient.

SECTION 3. *Special Meetings.* Special meetings of Stockholders, unless otherwise provided by law, may be called at any time by the Board pursuant to a resolution adopted by a majority of the then authorized number of directors (as determined in accordance with Section 2 of Article III of these By-laws), or by the Chief Executive Officer. Any such call must specify the matter or matters to be acted upon at such meeting and only such matter or matters shall be acted upon thereat.

SECTION 4. *Notice of Meetings.* Notice of each meeting of Stockholders, annual or special, shall be in writing, shall state the place, date and hour of the meeting, and, in the case of a special meeting, the purpose or purposes for which the meeting is called. Unless otherwise provided by law, the written notice of any meeting shall be given not less than 10 nor more than 60 days before the date of the meeting to each Stockholder entitled to vote at the meeting. If mailed, notice is given when deposited in the United States mail, postage prepaid, directed to the Stockholder at his address as it appears on the records of the Corporation. Unless (i) the adjournment is for more than 30 days, or (ii) the Board shall fix a new record date for any adjourned meeting after the adjournment, notice of an adjourned meeting need not be given if the time and place to which the meeting shall be adjourned were announced at the meeting at which the adjournment was taken.

SECTION 5. *Quorum.* At each meeting of Stockholders of the Corporation, the holders of a majority of the shares of capital stock of the Corporation entitled to vote at the meeting, present in person or represented by proxy, shall constitute a quorum for the transaction of business, except as otherwise provided by law. In the absence of a quorum, the chairman of the meeting or a majority in interest of those present in person or represented by proxy and entitled to vote at the meeting may adjourn the meeting from time to time until a quorum shall be present.

SECTION 6. *Order of Business.* The order of business at all meetings of Stockholders shall be as determined by the chairman of the meeting.

SECTION 7. *Voting.* Except as otherwise provided in the Certificate of Incorporation, at each meeting of Stockholders, every Stockholder of the Corporation shall be entitled to one vote for every

share of capital stock standing in his name on the stock record of the Corporation (i) at the time fixed pursuant to Section 6 of Article VII of these By-laws as the record date for the determination of Stockholders entitled to vote at such meeting, or (ii) if no such record date shall have been fixed, then at the close of business on the day next preceding the day on which notice thereof shall be given. At each meeting of Stockholders, except as otherwise provided by law or in the Certificate of Incorporation or these By-laws, in all matters other than the election of directors, the affirmative vote of the majority of shares present in person or represented by proxy and entitled to vote on the subject matter shall be the act of the Stockholders.

SECTION 8. *Inspectors.* In advance of any meeting of Stockholders, the Board shall appoint one or more inspectors to act at the meeting and make a written report thereof and may designate one or more alternate inspectors to replace any inspector who fails to act. If no inspector or alternate is able to act at a meeting, the chairman of the meeting shall appoint one or more inspectors to act at the meeting. Each inspector shall take and sign such oath and perform such duties as shall be required by law and may perform such other duties not inconsistent therewith as may be requested by the Corporation.

ARTICLE III

DIRECTORS

SECTION 1. *Powers.* The business and affairs of the Corporation shall be managed by or under the direction of the Board. The Board may exercise all such authority and powers of the Corporation and do all such lawful acts and things as are not by law or otherwise directed or required to be exercised or done by the Stockholders.

SECTION 2. *Number, Election and Terms.* The authorized number of directors may be determined from time to time by vote of a majority of the then authorized number of directors or by the affirmative vote of the holders of at least 80% of the voting power of the then outstanding shares of capital stock of the Corporation entitled to vote generally in the election of directors, voting together as a single class; provided, however, that such number shall not be less than 13 nor more than 23, and that such number shall automatically be increased by two in the event of default in the payment of dividends on the Preferred Stock under the circumstances described in the Certificate of Incorporation. The directors, other than those who may be elected by the holders of the Preferred Stock of the Corporation pursuant to the Certificate of Incorporation, shall be classified with respect to the time for which they severally hold office, into three classes, as nearly equal in number as possible, as determined by the Board, one class to be originally elected for a term expiring at the annual meeting of Stockholders to be held in 1986, another class to be originally elected for a term expiring at the annual meeting of Stockholders to be held in 1987, and another class to be originally elected for a term expiring at the annual meeting of Stockholders to be held in 1988, with the members of each class to hold office until their successors have been elected and qualified. At each annual meeting of Stockholders, the successors of the class of directors whose term expires at that meeting shall be elected to hold office for a term expiring at the annual meeting of Stockholders held in the third year following the year of their election. Except as otherwise provided in the Certificate of Incorporation, newly created directorships resulting from any increase in the number of directors and any vacancies on the Board resulting from death, resignation, disqualification, removal or other cause shall be filled by the affirmative vote of a majority of the remaining directors then in office, even if less than a quorum of the Board, or by a sole remaining director. Any director elected in accordance with the preceding sentence shall hold office until the annual meeting of Stockholders at which the term of office of the class to which such director has been elected expires and until such director's successor shall have been elected and qualified. No decrease in the number of directors constituting the Board shall shorten the term of any incumbent director.

SECTION 3. *Nomination of Directors; Election.* Nomination for the election of directors may be made at a meeting of Stockholders by the Board or a committee appointed by the Board, or by any Stockholder entitled to vote for the election of directors at the meeting who while a Stockholder of record shall have given written notice of his intent to make such nomination in conformity with this Section 3. A Stockholder's notice of intent to make a nomination shall be addressed to the Secretary of the Corporation and shall be delivered to or mailed and received at the principal executive offices of the Corporation not less than 30 days nor more than 60 days prior to the meeting; provided that in the

event less than 40 days' notice or prior public disclosure of the date of the meeting is given, notice by the Stockholder must be so received not later than the close of business on the 10th day following the day on which the notice of meeting was first mailed or such public disclosure was made. The Stockholder's notice shall include (i) as to each person the Stockholder proposes to nominate for election or re-election as a director all information relating to such person required to be disclosed in solicitations of proxies for election of directors or otherwise required pursuant to Regulation 14A promulgated under the Securities Exchange Act of 1934, as amended, and such person's written consent to be nominated and to serve as a director if elected and (ii) the Stockholder's name and address as they appear on the Corporation's stock record and the class and number of shares of capital stock of the Corporation the Stockholder beneficially owns. At the request of the Board of Directors, any person nominated by the Board of Directors for election as a director shall furnish to the Secretary of the Corporation that information required to be set forth in a Stockholder's notice of nomination which pertains to the nominee. No person shall be eligible to serve as a director of the Corporation unless nominated in accordance with the procedure set forth in this By-law. The chairman of the meeting shall, if the facts warrant, determine and declare to the meeting that a nomination was not made in accordance with the procedure prescribed by the By-laws, and if he should so declare, the defective nomination shall be disregarded. Notwithstanding the foregoing provisions of this Section 3, a Stockholder shall also comply with all applicable requirements of the Securities Exchange Act of 1934, as amended, and the rules and regulations thereunder with respect to the matters set forth in this Section 3. Directors shall be at least 21 years of age. Directors need not be Stockholders. At each meeting of Stockholders for the election of directors, directors shall be elected by a plurality of the votes of the shares present in person or represented by proxy at the meeting and entitled to vote on the election of directors.

SECTION 4. *Place of Meetings.* Meetings of the Board shall be held at such place, within or without the State of Delaware, as the Board may from time to time determine or as shall be specified or fixed in the notice or waiver of notice of any such meeting.

SECTION 5. *Regular Meetings.* Regular meetings of the Board shall be held in accordance with a yearly meeting schedule as determined by the Board; or such meetings may be held on such other days and at such other times as the Board may from time to time determine. Notice of regular meetings of the Board need not be given except as otherwise required by these By-laws.

SECTION 6. *Special Meetings.* Special meetings of the Board may be called by the Chief Executive Officer and shall be called by the Secretary at the request of any two of the other directors.

SECTION 7. *Notice of Meetings.* Notice of each special meeting of the Board (and of each regular meeting for which notice shall be required), stating the time, place and purposes thereof, shall be mailed to each director, addressed to him at his residence or usual place of business, or shall be sent to him by telex, cable or telegram so addressed, or shall be given personally or by telephone, on 24 hours notice, or such shorter notice as the person or persons calling such meeting may deem necessary or appropriate in the circumstances.

SECTION 8. *Quorum and Manner of Acting.* The presence of at least a majority of the authorized number of directors shall constitute a quorum for the transaction of business at any meeting of the Board. If a quorum shall not be present at any meeting of the Board, a majority of the directors present thereat may adjourn the meeting from time to time, without notice other than announcement at the meeting, until a quorum shall be present. Except where a different vote is required by law or the Certificate of Incorporation or these By-laws, the vote of a majority of the directors present at a meeting at which a quorum is present shall be the act of the Board. Any action required or permitted to be taken by the Board may be taken without a meeting if all the directors consent thereto in writing and the writing or writings are filed with the minutes of proceedings of the Board. Any one or more directors may participate in any meeting of the Board by means of conference telephone or similar communications equipment by means of which all persons participating in the meeting can hear each other. Participation by such means shall constitute presence in person at a meeting of the Board.

SECTION 9. *Resignation.* Any director may resign at any time by giving written notice to the Chairman of the Board, the Chief Executive Officer or the Secretary, which notice shall be deemed to

constitute notice to the Corporation. Such resignation shall take effect upon receipt of such notice or at any later time specified therein.

SECTION 10. *Removal of Directors.* Subject to the rights of the holders of Preferred Stock, any director may be removed from office only for cause by the affirmative vote of the holders of at least 80% of the voting power of all shares of the Corporation entitled to vote generally in the election of directors, voting together as a single class.

SECTION 11. *Compensation of Directors.* The Board may provide for the payment to any of the directors, other than officers or employees of the Corporation, of a specified amount for services as a director or member of a committee of the Board, or of a specified amount for attendance at each regular or special Board meeting or committee meeting, or of both, and all directors shall be reimbursed for expenses of attendance at any such meeting; provided, however, that nothing herein contained shall be construed to preclude any director from serving the Corporation in any other capacity and receiving compensation therefor.

ARTICLE IV

COMMITTEES OF THE BOARD

SECTION 1. *Appointment and Powers of Executive Committee.* The Board shall, by resolution adopted by the affirmative vote of a majority of the authorized number of directors, designate an Executive Committee of the Board which shall consist of such number of directors as the Board may determine.

Except as otherwise provided by law, during the interval between the meetings of the Board the Executive Committee shall have and may exercise all the powers and authority of the Board in the management and direction of the business and affairs of the Corporation (except for matters hereinafter assigned or assigned by the Board to the Audit Committee or the Compensation Committee), in such manner as the Executive Committee shall deem in the best interests of the Corporation, in all cases in which specific directions shall not have been given by the Board, and may authorize the seal of the Corporation to be affixed to all papers which require it. A majority of the members of the Executive Committee shall constitute a quorum for the transaction of business by the committee and the vote of a majority of the members of the committee present at a meeting at which a quorum is present shall be the act of the committee. Either the Chief Executive Officer or the Chairman of the Executive Committee may call meetings of the Executive Committee.

SECTION 2. *Appointment and Powers of Audit Committee.* The Board shall, by resolution adopted by the affirmative vote of a majority of the authorized number of directors, designate an Audit Committee of the Board, which shall consist of such number of directors as the Board may determine and shall be comprised solely of directors independent of management and free from any relationship that, in the opinion of the Board, would interfere with the exercise of independent judgment as a committee member. The Audit Committee shall (i) make recommendations to the Board as to the independent accountants to be appointed by the Board; (ii) review with the independent accountants the scope of their examination; (iii) receive the reports of the independent accountants and meet with representatives of such accountants for the purpose of reviewing and considering questions relating to their examination and such reports; (iv) review, either directly or through the independent accountants, the internal accounting and auditing procedures of the Corporation and (v) perform such other functions as may be assigned to it from time to time by the Board. The Audit Committee may determine its manner of acting and fix the time and place of its meetings, unless the Board shall otherwise provide. A majority of the members of the Audit Committee shall constitute a quorum for the transaction of business by the committee and the vote of a majority of the members of the committee present at a meeting at which a quorum is present shall be the act of the committee.

SECTION 3. *Other Committees.* The Board may, by the affirmative vote of a majority of the authorized number of directors, designate members of the Board to constitute a Compensation Committee and other committees of the Board, which shall in each case consist of such number of directors as the Board may determine, and shall have and may exercise, to the extent permitted by law, such powers and authority as the Board may by resolution delegate to them and may authorize the seal

of the Corporation to be affixed to all papers which require it. Each such committee may determine its manner of acting and fix the time and place of its meetings, unless the Board shall otherwise provide. A majority of the members of any such committee shall constitute a quorum for the transaction of business by the committee and the vote of a majority of the members of such committee present at a meeting at which a quorum is present shall be the act of the committee.

SECTION 4. *Action by Consent; Participation by Telephone or Similar Equipment.* Unless the Board shall otherwise provide, any action required or permitted to be taken by any committee may be taken without a meeting if all members of the committee consent thereto in writing and the writing or writings are filed with the minutes of proceedings of the committee. Unless the Board shall otherwise provide, any one or more members of any committee may participate in any meeting of the committee by means of conference telephone or similar communications equipment by means of which all persons participating in the meeting can hear each other. Participation by such means shall constitute presence in person at a meeting of the committee.

SECTION 5. *Changes in Committees; Resignations; Removals.* The Board shall have power, by the affirmative vote of a majority of the authorized number of directors, at any time to change the members of, to fill vacancies in, and to discharge any committee of the Board. Any member of any such committee may resign at any time by giving written notice to the Chairman of the Board, the Chief Executive Officer, the Chairman of such committee or the Secretary, which notice shall be deemed to constitute notice to the Corporation. Such resignation shall take effect upon receipt of such notice or at any later time specified therein. Any member of any such committee may be removed at any time, either with or without cause, by the affirmative vote of a majority of the authorized number of directors at any meeting of the Board, provided such removal shall have been referred to in the notice of such meeting.

ARTICLE V

OFFICERS

SECTION 1. *Number and Qualifications.* The officers of the Corporation may include a Chairman of the Board, Vice Chairman of the Board, Chief Executive Officer, President, one or more Vice Presidents, General Counsel, Treasurer, Secretary and Controller; provided, however, that any one or more of the foregoing offices may remain vacant from time to time, except as otherwise required by law. So far as practicable, the officers shall be elected annually on the day of the annual meeting of Stockholders. Each officer shall hold office until the next annual election of officers and until his successor is elected and qualified, or until his death or retirement, or until he shall have resigned or been removed in the manner hereinafter provided. The same person may hold more than one office. The Chairman of the Board, the Vice Chairman of the Board, the Chief Executive Officer and the President shall be elected from among the directors. The Board may from time to time elect or appoint such other officers or agents as may be necessary or desirable for the business of the Corporation. Such other officers and agents shall have such titles and duties and shall hold their offices for such terms as may be prescribed by the Board. The Chief Executive Officer may appoint one or more Deputy, Associate or Assistant officers, or such other agents as may be necessary or desirable for the business of the Corporation. In case one or more Deputy, Associate or Assistant officers shall be appointed, the officer such appointee assists may delegate to him the authority to perform such of the officer's duties as the officer may determine.

SECTION 2. *Resignations.* Any officer may resign at any time by giving written notice to the Chairman of the Board, the Chief Executive Officer or the Secretary, which notice shall be deemed to constitute notice to the Corporation. Such resignation shall take effect upon receipt of such notice or at any later time specified therein.

SECTION 3. *Removal.* Any officer or agent may be removed, either with or without cause, at any time, by the Board at any meeting, provided such removal shall have been referred to in the notice of such meeting; provided, further, that the Chief Executive Officer may remove any agent appointed by the Chief Executive Officer.

SECTION 4. *Vacancies.* Any vacancy among the officers, whether caused by death, resignation, removal or otherwise, shall be filled in the manner prescribed for election to such office.

SECTION 5. *Chairman of the Board.* The Chairman of the Board shall, if present, preside at all meetings of the Board and, in the absence of the Chief Executive Officer, at all meetings of the Stockholders. He shall perform the duties incident to the office of the Chairman of the Board and all such other duties as are specified in these By-laws or as shall be assigned to him from time to time by the Board.

SECTION 6. *Vice Chairman of the Board.* The Vice Chairman of the Board shall, if present, preside at all meetings of the Board at which the Chairman of the Board shall not be present and at all meetings of the Stockholders at which neither the Chief Executive Officer nor the Chairman of the Board shall be present. He shall perform such other duties as shall be assigned to him from time to time by the Board or the Chief Executive Officer.

SECTION 7. *Chief Executive Officer.* The Chief Executive Officer shall, if present, preside at all meetings of the Stockholders. He shall have, under the control of the Board, general supervision and direction of the business and affairs of the Corporation. He shall at all times see that all resolutions or determinations of the Board are carried into effect. He may from time to time appoint, remove or change members of and discharge one or more advisory committees, each of which shall consist of such number of persons (who may, but need not, be directors or officers of the Corporation), and have such advisory duties, as he shall determine. He shall perform the duties incident to the office of the Chief Executive Officer and all such other duties as are specified in these By-laws or as shall be assigned to him from time to time by the Board.

SECTION 8. *President.* The President shall be the chief operating officer of the Corporation and shall perform such duties as shall be assigned to him from time to time by the Board or the Chief Executive Officer.

SECTION 9. *Vice Presidents.* The Board shall, if it so determines, elect one or more Vice Presidents (with such additional titles as the Board may prescribe), each of whom shall perform such duties as shall be assigned to him from time to time by the Chief Executive Officer or such other officer to whom the Vice President reports.

SECTION 10. *General Counsel.* The General Counsel shall be the chief legal officer of the Corporation and the head of its legal department. He shall, in general, perform the duties incident to the office of General Counsel and all such other duties as may be assigned to him from time to time by the Chief Executive Officer.

SECTION 11. *Treasurer.* The Treasurer shall have charge and custody of all funds and securities of the Corporation, shall keep full and accurate accounts of receipts and disbursements in books belonging to the Corporation, shall deposit all funds of the Corporation in such depositaries as may be designated pursuant to these By-laws, shall receive, and give receipts for, moneys due and payable to the Corporation from any source whatsoever, shall disburse the funds of the Corporation and shall render to all regular meetings of the Board, or whenever the Board may require, an account of all his transactions as Treasurer. He shall, in general, perform all the duties incident to the office of Treasurer and all such other duties as may be assigned to him from time to time by the Chief Executive Officer or such other officer to whom the Treasurer reports.

SECTION 12. *Secretary.* The Secretary shall, if present, act as secretary of all meetings of the Board, the Executive Committee and other committees of the Board and the Stockholders and shall have the duty to record the proceedings of such meetings in one or more books provided for that purpose. He shall see that all notices are duly given in accordance with these By-laws and as required by law, shall be custodian of the seal of the Corporation and shall affix and attest the seal to all documents to be executed on behalf of the Corporation under its seal. He shall, in general, perform all the duties incident to the office of Secretary and all such other duties as may be assigned to him from time to time by the Chief Executive Officer or such other officer to whom the Secretary reports.

SECTION 13. *Controller.* The Controller shall have control of all the books of account of the Corporation, shall keep a true and accurate record of all property owned by it, its debts and of its revenues and expenses, shall keep all accounting records of the Corporation (other than the accounts of

receipts and disbursements and those relating to the deposit or custody of funds and securities of the Corporation, which shall be kept by the Treasurer) and shall render to the Board, whenever the Board may require, an account of the financial condition of the Corporation. He shall, in general, perform all the duties incident to the office of Controller and all such other duties as may be assigned to him from time to time by the Chief Executive Officer or such other officer to whom the Controller reports.

SECTION 14. *Bonds of Officers.* If required by the Board, any officer of the Corporation shall give a bond for the faithful discharge of his duties in such amount and with such surety or sureties as the Board may require.

SECTION 15. *Compensation.* The salaries of the officers shall be fixed from time to time by the Board; provided, however, that the Chief Executive Officer may fix or delegate to others the authority to fix the salaries of any agents appointed by the Chief Executive Officer.

SECTION 16. *Officers of Operating Companies or Divisions.* The Chief Executive Officer shall have the power to appoint, prescribe the terms of office, the responsibilities and duties and salaries of, and remove, the officers of the operating companies or divisions other than those who are officers of the Corporation.

ARTICLE VI

CONTRACTS, CHECKS, LOANS, DEPOSITS, ETC.

SECTION 1. *Contracts.* The Board may authorize any officer or officers, agent or agents, in the name and on behalf of the Corporation, to enter into any contract or to execute and deliver any instrument, which authorization may be general or confined to specific instances; and, unless so authorized by the Board, no officer, agent or employee shall have any power or authority to bind the Corporation by any contract or engagement or to pledge its credit or to render it liable pecuniarily for any purpose or for any amount.

SECTION 2. *Checks, etc.* All checks, drafts, bills of exchange or other orders for the payment of money out of the funds of the Corporation, and all notes or other evidences of indebtedness of the Corporation, shall be signed in the name and on behalf of the Corporation in such manner as shall from time to time be authorized by the Board, which authorization may be general or confined to specific instances.

SECTION 3. *Loans.* No loan shall be contracted on behalf of the Corporation, and no negotiable paper shall be issued in its name, unless authorized by the Board, which authorization may be general or confined to specific instances. All bonds, debentures, notes and other obligations or evidences of indebtedness of the Corporation issued for such loans shall be made, executed and delivered as the Board shall authorize, which authorization may be general or confined to specific instances.

SECTION 4. *Deposits.* All funds of the Corporation not otherwise employed shall be deposited from time to time to the credit of the Corporation in such banks, trust companies or other depositaries as may be selected by or in the manner designated by the Board. The Board or its designees may make such special rules and regulations with respect to such bank accounts, not inconsistent with the provisions of these By-laws, as may be deemed expedient.

ARTICLE VII

CAPITAL STOCK

SECTION 1. *Stock Certificates.* Each Stockholder shall be entitled to have, in such form as shall be approved by the Board, a certificate or certificates signed by the Chairman of the Board or the Vice Chairman of the Board or the President or a Vice President and by the Treasurer or an Assistant Treasurer or the Secretary or an Assistant Secretary representing the number of shares of capital stock of the Corporation owned by such Stockholder. Any or all of the signatures on any such certificate may be a facsimile. In case any officer, transfer agent or registrar who has signed or whose facsimile signature has been placed upon any such certificate shall have ceased to be such before such certificate is issued, such certificate may be issued by the Corporation with the same effect as if such officer, transfer agent or registrar had been such at the date of its issue.

SECTION 2. *List of Stockholders Entitled to Vote.* The officer of the Corporation who has charge of the stock ledger of the Corporation shall prepare or cause to have prepared, at least 10 days before every meeting of Stockholders, a complete list of the Stockholders entitled to vote at the meeting, arranged in alphabetical order, and showing the address of each Stockholder and the number of shares registered in the name of each Stockholder. Such list shall be open to the examination of any Stockholder, for any purpose germane to the meeting, during ordinary business hours, for a period of at least 10 days prior to the meeting, either at a place within the city where the meeting is to be held, which place shall be specified in the notice of the meeting, or, if not so specified, at the place where the meeting is to be held. The list shall also be produced and kept at the time and place of the meeting during the whole time thereof, and may be inspected by any Stockholder of the Corporation who is present.

SECTION 3. *Stock Ledger.* The stock ledger of the Corporation shall be the only evidence as to who are the Stockholders entitled to examine the stock ledger, the list required by Section 2 of this Article VII or the books of the Corporation, or to vote in person or by proxy at any meeting of Stockholders.

SECTION 4. *Transfers of Capital Stock.* Transfers of shares of capital stock of the Corporation shall be registered on the stock record of the Corporation upon presentation and surrender, with a request to register transfer, of the certificate or certificates representing the shares properly endorsed by the holder of record or accompanied by a separate document signed by the holder of record containing an assignment or transfer of the shares or a power to assign or transfer the shares. The Board may make such additional rules and regulations as it may deem expedient concerning the issue and transfer of certificates representing shares of the capital stock of the Corporation.

SECTION 5. *Lost Certificates.* The Corporation may issue a new certificate or cause a new certificate to be issued in place of any certificate theretofore issued by the Corporation alleged to have been lost, stolen or destroyed, upon the making of an affidavit of that fact by the person claiming the certificate to be lost, stolen or destroyed. The Corporation may require the owner of such lost, stolen or destroyed certificate, or his legal representative, to give the Corporation a bond sufficient to indemnify it against any claim that may be made against it on account of the alleged loss, theft or destruction of any such certificate or the issuance of such new certificate.

SECTION 6. *Fixing of Record Date.* In order that the Corporation may determine the Stockholders entitled to notice of or to vote at any meeting of Stockholders or any adjournment thereof, the Board may fix a record date, which record date shall not precede the date upon which the resolution fixing the record date is adopted by the Board and which record date shall not be more than 60 nor less than 10 days before the date of such meeting. A determination of Stockholders of record entitled to notice of or to vote at a meeting of Stockholders shall apply to any adjournment of the meeting; provided, however, that the Board may fix a new record date for the adjourned meeting. In order that the Corporation may determine the Stockholders entitled to receive payment of any dividend or other distribution or allotment of any rights or the Stockholders entitled to exercise any rights in respect of any change, conversion or exchange of capital stock or for the purpose of any other lawful action, the Board may fix a record date, which record date shall not precede the date upon which the resolution fixing the record date is adopted, and which record date shall be not more than 60 days prior to such action.

SECTION 7. *Registered Owners.* Prior to due presentment for registration of transfer of a certificate representing shares of capital stock of the Corporation, the Corporation may treat the registered owner of such shares as the person exclusively entitled to vote, to receive dividends, to receive notifications, and otherwise to exercise all the rights and powers of an owner of such shares, except as otherwise provided by law.

ARTICLE VIII

FISCAL YEAR

The Corporation's fiscal year shall coincide with the calendar year.

ARTICLE IX

SEAL

The Corporation's seal shall be circular in form and shall include the words "Allied-Signal Inc., Delaware, 1985, Seal."

ARTICLE X

WAIVER OF NOTICE

Whenever any notice is required by law, the Certificate of Incorporation or these By-laws, to be given to any director, member of a committee or Stockholder, a waiver thereof in writing, signed by the person or persons entitled to said notice, whether before or after the time stated therein, shall be deemed equivalent thereto. Attendance of a person at a meeting shall constitute a waiver of notice of such meeting, except when the person attends a meeting for the express purpose of objecting, at the beginning of the meeting, to the transaction of any business because the meeting is not lawfully called or convened. Neither the business to be transacted at, nor the purpose of, any regular or special meeting of the Stockholders, directors, or members of a committee of directors need be specified in any written waiver of notice.

ARTICLE XI

AMENDMENTS

These By-laws or any of them may be amended or supplemented in any respect at any time, either (a) at any meeting of Stockholders, provided that any amendment or supplement proposed to be acted upon at any such meeting shall have been described or referred to in the notice of such meeting, or (b) at any meeting of the Board, provided that any amendment or supplement proposed to be acted upon at any such meeting shall have been described or referred to in the notice of such meeting or an announcement with respect thereto shall have been made at the last previous Board meeting, and provided further that no amendment or supplement adopted by the Board shall vary or conflict with any amendment or supplement adopted by the Stockholders. Notwithstanding the preceding sentence, the affirmative vote of the holders of at least 80% of the voting power of the then outstanding shares of capital stock of the Corporation entitled to vote generally in the election of directors, voting together as a single class, shall be required to amend or repeal, or adopt any provisions inconsistent with, Section 3 of Article II of these By-laws, Sections 2 or 10 of Article III of these By-laws, or this sentence.

ARTICLE XII

EMERGENCY BY-LAWS

SECTION 1. *Emergency Board of Directors.* In case of an attack on the United States or on a locality in which the Corporation conducts its business or customarily holds meetings of the Board or the Stockholders, or during any nuclear or atomic disaster, or during the existence of any catastrophe, or other similar emergency condition, as a result of which a quorum of the Board or a committee thereof cannot readily be convened for action in accordance with the provisions of the By-laws, the business and affairs of the Corporation shall be managed by or under the direction of an Emergency Board of Directors (hereinafter called the Emergency Board) established in accordance with Section 2 of this Article XII.

SECTION 2. *Membership of Emergency Board of Directors.* The Emergency Board shall consist of at least three of the following persons present or available at the Emergency Corporate Headquarters determined according to Section 5 of this Article XII: (i) those persons who were directors at the time of the attack or other event mentioned in Section 1 of this Article XII, and (ii) any other persons

appointed by such directors to the extent required to provide a quorum at any meeting of the Board. If there are no such directors present or available at the Emergency Corporate Headquarters, the Emergency Board shall consist of the three highest-ranking officers or employees of the Corporation present or available and any other persons appointed by them.

SECTION 3. *Powers of the Emergency Board.* The Emergency Board will have the same powers as those granted to the Board in these By-laws, but will not be bound by any requirement of these By-laws which a majority of the Emergency Board believes impracticable under the circumstances.

SECTION 4. *Stockholders' Meeting.* At such time as it is practicable to do so the Emergency Board shall call a meeting of Stockholders for the purpose of electing directors. Such meeting will be held at a time and place to be fixed by the Emergency Board and pursuant to such notice to Stockholders as it is deemed practicable to give. The Stockholders entitled to vote at the meeting, present in person or represented by proxy, shall constitute a quorum.

SECTION 5. *Emergency Corporate Headquarters.* Emergency Corporate Headquarters shall be at such location as the Board or the Chief Executive Officer shall determine prior to the attack or other event, or if not so determined, at such place as the Emergency Board may determine.

SECTION 6. *Limitation of Liability.* No officer, director or employee acting in accordance with the provisions of this Article XII shall be liable except for willful misconduct.

11

Allied Signal

ALLIED-SIGNAL AEROSPACE COMPANY

March 8, 1991

Los Angeles City Fire Department
Hazardous Materials Section
Room 990-B
Los Angeles, California 90012

RE: Allied-Signal Electrodynamics Division
11600 Sherman Way
North Hollywood, California 91605

Enclosed is the updated business plan for the referenced facility. Please note this is an amended business plan, submitted as a complete business plan.

If you have any questions or comments, please call me at (818) 503-3214.

Sincerely,

Nancy A. Girten

Nancy A. Girten
Senior Environmental Engineer

NG:ng

Enclosure

041009

AMENDMENT FORM

CERTIFICATE OF DISCLOSURE OF HAZARDOUS SUBSTANCES PART A

INSTRUCTIONS: DO NOT USE THIS FORM FOR A CHANGE IN THE BUSINESS LOCATION OR THE BUSINESS OWNER. AN INITIAL APPLICATION MUST BE SUBMITTED WHEN A BUSINESS MOVES TO A NEW LOCATION OR CHANGES OWNERSHIP.

COMPLETE ALL ITEMS BELOW. TYPE OR PRINT NEATLY. MAIL PARTS A, B AND C TO: LOS ANGELES CITY FIRE DEPARTMENT, HAZARDOUS MATERIALS SECTION, 200 NORTH MAIN STREET, ROOM 990-8, LOS ANGELES, CA. 90012.

LAFD # 026645-001-6 BUSINESS TAX ACCOUNT # _____ SIC CODE # 3728

BUSINESS SITE ADDRESS 11600 Sherman Way UNIT # _____

CITY N. Hollywood STATE CA ZIP 91605

LEGAL NAME OF BUSINESS Allied-Signal Aerospace Co., Electrodynamics Division

NAME OF BUSINESS OWNER Allied-Signal, Inc. PHONE (201) 455-2000

NAME OF ON-SITE MANAGER Daniel Markowitz PHONE (818) 503-3445

PRIMARY EMERGENCY CONTACT Danilo Gutierrez 24 HR EMERGENCY PHONE W(818) 503-3626 H(714) 598-2165

ALTERNATE EMER. CONTACT Scott Myles 24 HR EMERGENCY PHONE W(818) 503-3580 H(818)843-3706

DOING BUSINESS AS (DBA) Allied-Signal Electrodynamics Div IN CARE OF ALLIED-SIGNAL, INC.

BUSINESS MAILING ADDRESS 11600 Sherman Way, N. Hollywood, CA 91605

NAME OF PROPERTY OWNER Allied-Signal, Inc.

MAILING ADDRESS P.O. Box 1057R, Morristown, N.J. 07960 PHONE (201) 455-2000

BRIEFLY DESCRIBE THE NATURE OF HAZARDOUS OPERATION Manufacture of hydraulic actuator systems

PERMIT INFORMATION: IF YOUR BUSINESS HAS A PERMIT ISSUED FOR HAZARDOUS SUBSTANCES OR WASTES, LIST THE PERMIT NUMBER.

	PERMIT NUMBER
A. L.A. FIRE DEPT. (FIRE PERMIT)	085765-98F
B. L.A. BUREAU OF SANITATION (INDUSTRIAL WASTE)	W-476123
C. SOUTH COAST AIR QUALITY MANAGEMENT DISTRICT	See Attached List
D. STATE HEALTH SERVICES (RADIOACTIVE MAT'L LICENSE)	
E. L.A. COUNTY HEALTH DEPT. (GENERATORS HAZARDOUS WASTE)	430033
F. E.P.A. IDENTIFICATION NO. (GENERATORS HAZARDOUS WASTE)	CAD008325334
G. E.P.A. IDENTIFICATION NO. (HAZARDOUS WASTE HAULER)	
H. E.P.A. IDENTIFICATION NO. (HAZARDOUS WASTE FACILITY-TSD)	
I. REGIONAL WATER QUALITY CONTROL BOARD	
J. CAL-OSHA (CARCINOGEN REGISTRATION)	
K. OTHER AGENCY (SPECIFY) DHS EH WASTE DISPOSAL	3-901114-01

810
828
464
238

IT IS UNLAWFUL FOR ANY PERSON TO KNOWINGLY VIOLATE ANY PROVISION OF THIS ORDINANCE. I CERTIFY UNDER PENALTY OF PERJURY, THAT THE ABOVE INFORMATION IS TRUE AND CORRECT TO THE BEST OF MY KNOWLEDGE. I AGREE TO COMPLY WITH ALL REGULATIONS, LAWS AND ORDINANCES PERTAINING TO OR RELATING TO THE ABOVE BUSINESS THAT ARE NOW IN EFFECT OR THAT MAY BE HEREAFTER ADDED.

SIGNATURES MUST BE INCLUDED.

X [signature] - President 3-5-91
SIGNATURE OF BUSINESS OWNER OR AUTHORIZED REPRESENTATIVE/TITLE/ DATE

X [signature] 1-31-91
SIGNATURE OF ON-SITE MANAGER DATE

FOR OFFICE USE ONLY

RECEIVED BY INIT. _____ DATE _____ LAFD SIGNATURE _____ DATE _____

DATA ENTRY INIT. _____ DATE _____ CODE (800, 801 or 810) _____ 902 # _____

BUSINESS INFORMATION

INSTRUCTIONS: Please complete and sign this form; your signature indicates that the information, as supplied is accurate.

Business Plan Number: 026645-001-6 THIS IS YOUR CURRENT BUSINESS PLAN NUMBER. THIS NUMBER MUST APPEAR ON ALL BUSINESS PLAN FORMS!

Business Name: Allied-Signal Aerospace Co., Electrodynamics Division

Address Where Business Is Conducted: 11600 Sherman Way
N. Hollywood, CA 91605

Other On-Site Addresses: N/A

		WORK PHONE NUMBER
Legal Business Owner Name:	Allied-Signal, Inc.	(201) 455-2000
On-Site Manager:	Dan Markowitz	(818) 503-3445
		EMERGENCY PHONE NUMBER (24-HOUR)
Emergency Contact:	Danilo Gutierrez	W(818) 503-3626 H(714)598-2165
Alternate Emergency Contact:	Scott Myles	W(818) 503-3580 H(818)843-3706

Standard Industrial Classification (SIC) Code of Business: 3728

Dun & Bradstreet Number: 0 0-8 3 2-5 3 3 4

MAILING ADDRESS: 11600 Sherman Way
N. Hollywood, CA 91605

Briefly describe the nature of the hazardous materials operations:
MANUFACTURE HYDRAULIC ACTUATION SYSTEMS

Number of Employees: 550 Square Footage of Facility: 238,010 sq.ft./15acr

[signature]	PRESIDENT	3/5/91
Signature of Legal Business Owner or Authorized Representative	Title	Date

****

Office Use Only Insp. I.D.:_____ Date:_____ D/E I.D.:_____ Date:_____ TS :_____

(Rev. 8/89)

1. Make extra copies of Part A, Business Information; Part B, Amendment for Hazardous Materials Inventory; and Part C, Amendment for Hazardous Waste Inventory, to use as worksheeets and for any future amendments.
2. BE SURE TO PHOTOCOPY THE COMPLETED AMENDMENT FOR YOUR RECORDS. Please mail parts A, B & C to:

LOS ANGELES CITY FIRE DEPARTMENT
HAZARDOUS MATERIALS SECTION
ROOM 990-B
LOS ANGELES, CA 90012
ATTENTION AMENDMENTS

A business which has a Certificate of Disclosure of Hazardous Substances, shall file an amendment with the Fire Department before:

A. The business handles a hazardous substance not previously disclosed to the Fire Department; and/or

B. The business handles quantities of a hazardous substance which exceed the maximum quantities previously disclosed on the form on file with the Fire Department; and/or

C. There is a change in the method or place of storage of a hazardous substance from that indicated on the form on file with the Fire Department such that continued reliance on the information could pose a threat to the environment or to the health or safety of individuals.

D. The business changes their emergency contact information.

COMPLETING PARTS A, B, & C

PART A (BUSINESS INFORMATION)

THIS PAGE MUST BE FILLED OUT COMPLETELY. You must provide all of the requested information including the signature of the business owner or authorized representative and the signature of the on-site manager.

PARTS B & C (HAZARDOUS MATERIALS INVENTORY & HAZARDOUS WASTE INVENTORY REPORTS)

List ONLY those chemicals that are being ADDED, CHANGED, or DELETED from the inventory report that the Fire Department currently has on file. DO NOT provide inventory information on these forms that has not changed from the last report given to the Fire Department.

NOTE: It is your legal obligation to provide an immediate, VERBAL report of any significant RELEASE or THREATENED RELEASE of a hazardous substance to the Fire Department by dialing 911 AND the Office of Emergency Services (OES) at (800) 852-7550.

For further information regarding the completion of these forms, contact the Hazardous Materials Section of the Los Angeles Fire Department at (213) 485-7476 or 485-7477.

BUSINESS EMERGENCY RESPONSE PLAN

Please answer the following questions clearly:

NOTIFICATION PROCEDURES - In the event of a reportable hazardous materials or waste release or threatened release, your business is required by State Law to provide an immediate verbal report to:

1. The Los Angeles City Fire Department: 9-1-1
2. The State Office of Emergency Services: (OES)1-800-852-7550 or 1-916-427-4341

Notifications will normally be made by Manager of Security (or designee)
Ron Borgstrom

If your business has an additional emergency response notification system, explain here.

3. How will the employees who are responsible for responding to a release or spill be notified of the emergency?

Security Manager (or designee) will immediately activate internal facility alarms or communication systems to notify facility personnel.

4. In the event of a spill or release, how will immediate notification and evacuation of the business be done? Include a description of the steps needed to evacuate employees from your facility.

Public address announcement will notify personnel of an evacuation. In addition to a sweep of the area by the Emergency Response Team (ERT), supervisors will be notified by telephone. Employees will be evacuated through the nearest exit from work stations to the rear parking lot (primary evacutation area) or the front guard house (alternate evacuation area). During evacuation, the front guard house will be the central communication and coordination area.

MEDICAL ASSISTANCE

5. List 2 local emergency medical facilities that will be used, EXCLUDING PARAMEDICS AND 911.

Name of emergency medical facility: St. Joseph's Occupational Health Center

Address: 3413 Pacific Ave., Burbank Phone: (818) 953-4400

Name of emergency medical facility: Pacifica Hospital

Address: 9449 San Fernando Rd., Sun Valley Phone: (818) 767-3310

PREVENTION - Actions your business will take to prevent a hazard from occurring.

6. Describe the kinds of hazards associated with the hazardous materials present at your facility. What actions would your business take to prevent these hazards from occuring? You may include a discussion of safety and storage procedures.

Hazards associated with hazardous materials present at EDD include:
1) fire; 2) chemical burns
Safety and storage procedures include:
1) All hazardous material/waste is stored and used in containment berm areas.

Answer to question 6 continued:

2. All hazardous material/waste (including extremely hazardous material/waste) is stored in locked areas.
3. Hazardous material is segregated during storage.
4. Training has been provided for the handling and storage of hazardous material/waste.

MITIGATION (REDUCE THE HAZARD) - What is done to lessen the harm or the damage to persons, property, or the environment, and prevent what has occurred from getting worse or spreading.

7. What is the immediate response to a leak, spill, fire, explosion or airborne release at your business?

The emergency coordinator will immediately identify the character, exact source, amount, and extent of any released material. In addition, assessment will be conducted to determine potential hazards (direct and indirect) to human health and/or environment that may result from the release, fire or explosion.

ABATEMENT - What you do to stop the hazard.

8. At your facility, how do you handle the complete process of stopping a release, cleaning up, and disposing of the released materials?

The emergency coordinator may, if necessary, shutdown processes and operations which may contribute to the recurrence and/or spreading of the release. In addition, provisions will be provided for treating and containing recovered waste, or any other material resulting from a release, fire or explosion at the facility using a vacuum sump pump (if compatible with release), absorbent materials, or neutralizing agents. Proper storage and disposal of the hazardous waste will be conducted in accordance with applicable state and federal regulations. On-call emergency response will be provided through an outside source (contract).

EMPLOYEE TRAINING - Employee training is designed to teach employees about the following four categories:

1. Handling hazardous materials safely
2. Which emergency agencies to contact
3. Use of emergency clean-up equipment and supplies
4. Evacuation procedures

Employee Training Part 1 - Safety

9a. Describe the training NEW employees recieve in handling and using the hazardous materials and waste that are part of your operation. How is this documented and where is the documentation kept?

All new employees attend hazard communication training which includes labeling, storage, handling practices, and the location of specific chemical information. When transferring to a new department, each employee is instructed by the supervisor on specific chemical hazards in the department.
All employees involved in the direct handling of hazardous waste are given additional training.
Documentation is provided on participant registry forms, and kept on file in the Health, Safety and Environmental Department.

9b. How often does REFRESHER training occur, how is it conducted, and what subjects are covered? How is this documented and where is the documentation kept?

Hazard communication refresher training is conducted annually.
An additional 8-hour refresher course is conducted annually for employees involved in the direct handling of hazardous waste, and included labeling, storage, handling practices, and the location of specific chemical information. Documentation is provided on participant registry forms, and kept on file in the Health, Safety and Environmental Department.

Employee Training Part 2 - Emergency Contact

10a. Are NEW employees trained to know which emergency response agencies to contact if an emergency occurs? Are specific individuals or teams designated to perform this function? Briefly describe.

Emergency contact training is handled by individual department supervisors. All employees are instructed to call security which is in operation 24 hours a day, 7 days per week.
An Emergency Response Team (ERT) has been established consisting of at least seven individuals trained in CPR and First-Aid to stabilize an emergency situation until advanced professional help arrives.

10b. How often does REFRESHER training occur, how is it conducted, and what information is covered?

A refresher course is conducted annually (averaged) through memorandums and practice drills.

Employee Training Part 3 - Emergency Equipment and Supplies

11a. How are NEW employees trained in the use of emergency equipment and supplies needed to stop spills, leaks, or fires? What kind of equipment and supplies are they taught to use to stop the release?

All new employees required to respond with emergency equipment are trained in the use of personal protective equipment, absorbent, and fire extinguishing equipment.

11b. How often is REFRESHER training conducted in this subject area? Are drills ever conducted?

A refresher course is conducted annually (averaged), and includes emergency practice drills.

Employee Training Part 4 - Evacuation

12. Are ALL employees given initial and refresher training on evacuation procedures? X yes ___ no

NOTE: Your business is required by State Law to keep a copy of this Business Plan, including the inventory. Describe where this copy is located at your business.

Health, Safety and Environmental Department

SIGNATURE OF BUSINESS OWNER OR AUTHORIZED REPRESENTATIVE: [signature] DATE: 3/5/91

(Rev. 8/89)

South Coast
AIR QUALITY MANAGEMENT DISTRICT

HEADQUARTERS, 9150 FLAIR DR., EL MONTE, CA 91731

OCTOBER 16, 1990

ALLIED-SIGNAL AEROSPACE CO, ELECTR.DIV ID - 011217
11600 SHERMAN WAY
NORTH HOLLYWOOD CA 916050000

PERMIT RENEWALS

PERMIT NUMBER	DESCRIPTION	APPLIC NUMBER	EXPIRATION DATE
M42415	SPRAY BOOTH PAINT AND SOLVENT	125602	08/01/91
M42416	OVEN, DRYING	125603	08/01/91
M53248	STORAGE TANK 1,1,1 TRICHLOROETHANE	128763	08/01/91
M60608	DEGREASER OTHER SOLVENT (>1 LB VOC/DAY)	128765	08/01/91
M51995	DEGREASER 111 TRICHLOROETHANE <=1LB/DVOC	140611	08/01/91
M49729	OVEN, BAKING	140612	08/01/91
M60720	DEGREASER 111 TRICHLOROETHANE <=1LB/DVOC	144784	08/01/91
D29571	TANK, SURFACE PREPARATION - OTHER ACIDS	192303	08/01/91
D29048	TANK, SURFACE PREPARATION - OTHER ACIDS	192304	08/01/91
D20601	STORAGE TANK CRANKCASE OIL	217270	08/01/91
D21431	POLYURETHANE PACKAGING	217271	08/01/91
P05144	OVEN, BAKING	A23431	08/01/91
P20643	ABRASIVE BLASTING (CABINET/MACHINE/ROOM)	A41782	08/01/91
P36679	SPRAY BOOTH PAINT AND SOLVENT	A57662	08/01/91
P43029	DEGREASER OTHER SOLVENT (>1 LB VOC/DAY)	A64027	08/01/91
P62837	BAGHOUSE, AMBIENT TEMPERATURE	A84657	08/01/91

PART B AMENDMENT FOR HAZARDOUS MATERIALS INVENTORY LAFD # _____ PAGE ____ OF ____

INSTRUCTIONS: READ ALL THE INSTRUCTIONS BELOW AND PHOTOCOPY EXTRA COPIES OF THIS FORM BEFORE COMPLETING IT. (REPORT HAZARDOUS WASTE ON PART C)

1. COMPLETE A SEPARATE FORM FOR EACH BUILDING, OUTDOOR AREA, ROOM OR UNDERGROUND TANK IN WHICH HAZARDOUS MATERIALS INVENTORY IS BEING AMENDED. USE BOX BELOW TO SPECIFY THE LOCATION OF THE HAZARDOUS MATERIALS LISTED ON THIS FORM.

LOCATION OF HAZARDOUS MATERIALS: COMPLETE ALL ITEMS IN THIS BOX.

BUSINESS NAME Allied-Signal Electrodynamics Division ADDRESS 11600 Sherman Way, N.Hollywood, CA 91605

ROOM NAME OR NUMBER N/A BUILDING NAME, OUTDOOR AREA, OR UNDERGROUND TANK NUMBERS. S1

2. COMPLETE ITEMS 1-10 FOR EACH HAZARDOUS MATERIAL TO BE AMENDED THAT IS STORED OR HANDLED AT THE LOCATION SPECIFIED ABOVE. INCLUDE RAW MATERIALS, FINISHED CHEMICAL PRODUCTS, CHEMICALS MANUFACTURED OR REPACKAGED, AND CHEMICALS DISTRIBUTED.
3. MAKE SURE YOU INDICATE WHETHER THE INFORMATION SHOULD BE ADDED, CHANGED OR DELETED FROM THE CURRENT DISCLOSURE THAT THE FIRE DEPARTMENT HAS ON FILE BY MARKING THE APPROPRIATE CODE UNDER ITEM #1.
4. THE CODES IN ITEM 4, 5 and 7 CAN BE FOUND ON THE ATTACHED TABLE OF CODES.

ADDITIONAL INSTRUCTIONS: ITEM 1: CHECK APPROPRIATE CODE: "A" INDICATES A PRODUCT THAT IS BEING ADDED TO YOUR EXISTING INVENTORY, "C" INDICATES A CHANGE IN THE INFORMATION THAT WAS REPORTED FOR THAT PRODUCT, "D" INDICATES A PRODUCT THAT HAS BEEN DELETED. ENTER THE CHEMICAL OR PRODUCT NAME. ITEM 2: ESTIMATE MAXIMUM QUANTITY HANDLED OR STORED AT ANY ONE TIME AT THE ABOVE LOCATION; INCLUDE UNITS (POUNDS, GALLONS, CUBIC FEET). ITEM 3: ESTIMATE ANNUAL AMOUNT HANDLED OR STORED AT THE ABOVE LOCATION; INCLUDE UNITS (POUNDS, GALLONS, CUBIC FEET). ITEM 4: LIST ALL THE TYPES OF CONTAINERS USED TO STORE THE PRODUCT (USE TABLE 1). ITEM 5: CHECK PHYSICAL HAZARDS (USE TABLE 2). ITEM 6: CHECK THE APPROPRIATE PHYSICAL STATE, ("S" FOR SOLID; "L" FOR LIQUID; "G" FOR GAS). ITEM 7: ENTER THE ONE HAZARD CLASS THAT APPLIES TO THE PRODUCT (USE TABLE 3). ITEM 8: CHECK THIS BOX IF PRODUCT OR ANY INGREDIENT IS EXTREMELY HAZARDOUS (SEE ATTACHED LIST OF EXTREMELY HAZARDOUS SUBSTANCES). ITEM 9: ENTER INGREDIENTS AND PERCENT OF CONCENTRATION. ITEM 10: ENTER THE CAS (CHEMICAL ABSTRACT SERVICE) NUMBERS FOR EACH HAZARDOUS INGREDIENT (USE YOUR MSDS).

(1) A ___ C ___ D ___ CHEMICAL OR PRODUCT NAME	(2) MAXIMUM QUANTITY ANY TIME	(3) TOTAL YEARLY QUANTITY	(4) STORAGE TYPES	(5) HEALTH & PHYSICAL HAZARDS	(6) PHYS. STATE	(7) HAZARD CLASS	(8) EXTREMELY HAZARDOUS	(9) HAZARDOUS CHEMICAL INGREDIENTS & PERCENTAGE OF EACH	%	(10) CAS NUMBERS OF EACH INGREDIENT
P-3576 1,1,1 Trichloroethane	1000 gal.	2,000 gal.	D	1 X, 2 X, 3, 4, 5	S, L X, G	1D		1,1,1 Trichloroethane	94	71-55-6

(1) A ___ C ___ D ___ CHEMICAL OR PRODUCT NAME	(2) MAXIMUM QUANTITY ANY TIME	(3) TOTAL YEARLY QUANTITY	(4) STORAGE TYPES	(5) HEALTH & PHYSICAL HAZARDS	(6) PHYS. STATE	(7) HAZARD CLASS	(8) EXTREMELY HAZARDOUS	(9) HAZARDOUS CHEMICAL INGREDIENTS & PERCENTAGE OF EACH	%	(10) CAS NUMBERS OF EACH INGREDIENT
				1, 2, 3, 4, 5	S, L, G					

FOR OFFICE USE ONLY: INSP. ID _____ INSP. INT. _____ DATE _____ DATA ENTRY ID _____ DATA ENTRY INIT _____ DATE _____

PART B AMENDMENT FOR HAZARDOUS MATERIALS INVENTORY

LAFD # 026645-001-6 PAGE ___ OF ___

LOCATION OF HAZARDOUS MATERIALS: COMPLETE ALL ITEMS IN THIS BOX

BUSINESS NAME Allied-Signal Electrodynamics Division ADDRESS 11600 Sherman Way, N. Hollywood, CA 91605

ROOM NAME OR NUMBER S3 BUILDING NAME, OUTDOOR AREA, OR UNDERGROUND TANK NUMBERS Acid Room

(1) CHEMICAL OR PRODUCT NAME	(2) MAXIMUM QUANTITY ANY TIME	(3) TOTAL YEARLY QUANTITY	(4) STORAGE TYPES	(5) HEALTH & PHYSICAL HAZARDS	(6) PHYS. STATE	(7) HAZARD CLASS	(8) EXTREMELY HAZARDOUS	(9) HAZARDOUS CHEMICAL INGREDIENTS & PERCENTAGE OF EACH		(10) CAS NUMBERS OF EACH INGREDIENT
Ammonium Nitrate	80 lb.	20 lb.	G	1 X, 2, 3, 4, 5	S X, L, G	3B		ammonium nitrate	100%	6484-52-2

(1) CHEMICAL OR PRODUCT NAME	(2) MAXIMUM QUANTITY ANY TIME	(3) TOTAL YEARLY QUANTITY	(4) STORAGE TYPES	(5) HEALTH & PHYSICAL HAZARDS	(6) PHYS. STATE	(7) HAZARD CLASS	(8) EXTREMELY HAZARDOUS	(9) HAZARDOUS CHEMICAL INGREDIENTS & PERCENTAGE OF EACH		(10) CAS NUMBERS OF EACH INGREDIENT
Nickel Sulfamate (Tech Grade)	20 gal.	20 gal.	B	1 X, 2 X, 3, 4, 5	S, L X, G	1C		nickel sulfamate	52%	13770-89-3

(1) CHEMICAL OR PRODUCT NAME	(2) MAXIMUM QUANTITY ANY TIME	(3) TOTAL YEARLY QUANTITY	(4) STORAGE TYPES	(5) HEALTH & PHYSICAL HAZARDS	(6) PHYS. STATE	(7) HAZARD CLASS	(8) EXTREMELY HAZARDOUS	(9) HAZARDOUS CHEMICAL INGREDIENTS & PERCENTAGE OF EACH		(10) CAS NUMBERS OF EACH INGREDIENT
Aluminum Oxide	1000 lb.	2000 lb.	B	1 X, 2, 3, 4, 5	S X, L, G	1C		aluminum oxide	99+ %	1344-28-1

FOR OFFICE USE ONLY: INSP. ID ___ INSP. INT. ___ DATE ___ DATA ENTRY ID ___ DATA ENTRY INIT ___ DATE ___

PART B AMENDMENT FOR HAZARDOUS MATERIALS INVENTORY

LAFD # 020045 401-0 PAGE ___ OF ___

INSTRUCTIONS: READ ALL THE INSTRUCTIONS BELOW AND PHOTOCOPY EXTRA COPIES OF THIS FORM BEFORE COMPLETING IT. (REPORT HAZARDOUS WASTE ON PART C)

1. COMPLETE A SEPARATE FORM FOR EACH BUILDING, OUTDOOR AREA, ROOM OR UNDERGROUND TANK IN WHICH HAZARDOUS MATERIALS INVENTORY IS BEING AMENDED. USE BOX BELOW TO SPECIFY THE LOCATION OF THE HAZARDOUS MATERIALS LISTED ON THIS FORM.

LOCATION OF HAZARDOUS MATERIALS: COMPLETE ALL ITEMS IN THIS BOX.

BUSINESS NAME Allied-Signal Electrodynamics Division ADDRESS 11600 Sherman Way North Hollywood 91605

ROOM NAME OR NUMBER N/A BUILDING NAME, OUTDOOR AREA, OR UNDERGROUND TANK NUMBERS. S2

2. COMPLETE ITEMS 1-10 FOR EACH HAZARDOUS MATERIAL TO BE AMENDED THAT IS STORED OR HANDLED AT THE LOCATION SPECIFIED ABOVE. INCLUDE RAW MATERIALS, FINISHED CHEMICAL PRODUCTS, CHEMICALS MANUFACTURED OR REPACKAGED, AND CHEMICALS DISTRIBUTED.
3. MAKE SURE YOU INDICATE WHETHER THE INFORMATION SHOULD BE ADDED, CHANGED OR DELETED FROM THE CURRENT DISCLOSURE THAT THE FIRE DEPARTMENT HAS ON FILE BY MARKING THE APPROPRIATE CODE UNDER ITEM #1.
4. THE CODES IN ITEM 4, 5 and 7 CAN BE FOUND ON THE ATTACHED TABLE OF CODES.

ADDITIONAL INSTRUCTIONS: ITEM 1: CHECK APPROPRIATE CODE: "A" INDICATES A PRODUCT THAT IS BEING ADDED TO YOUR EXISTING INVENTORY, "C" INDICATES A CHANGE IN THE INFORMATION THAT WAS REPORTED FOR THAT PRODUCT, "D" INDICATES A PRODUCT THAT HAS BEEN DELETED. ENTER THE CHEMICAL OR PRODUCT NAME. ITEM 2: ESTIMATE MAXIMUM QUANTITY HANDLED OR STORED AT ANY ONE TIME AT THE ABOVE LOCATION; INCLUDE UNITS (POUNDS, GALLONS, CUBIC FEET). ITEM 3: ESTIMATE ANNUAL AMOUNT HANDLED OR STORED AT THE ABOVE LOCATION; INCLUDE UNITS (POUNDS, GALLONS, CUBIC FEET). ITEM 4: LIST ALL THE TYPES OF CONTAINERS USED TO STORE THE PRODUCT (USE TABLE 1). ITEM 5: CHECK PHYSICAL HAZARDS (USE TABLE 2). ITEM 6: CHECK THE APPROPRIATE PHYSICAL STATE, ("S" FOR SOLID; "L" FOR LIQUID; "G" FOR GAS). ITEM 7: ENTER THE ONE HAZARD CLASS THAT APPLIES TO THE PRODUCT (USE TABLE 3). ITEM 8: CHECK THIS BOX IF PRODUCT OR ANY INGREDIENT IS EXTREMELY HAZARDOUS (SEE ATTACHED LIST OF EXTREMELY HAZARDOUS SUBSTANCES). ITEM 9: ENTER INGREDIENTS AND PERCENT OF CONCENTRATION. ITEM 10: ENTER THE CAS (CHEMICAL ABSTRACT SERVICE) NUMBERS FOR EACH HAZARDOUS INGREDIENT (USE YOUR MSDS).

(1) A ___ C ___ D ___ CHEMICAL OR PRODUCT NAME	(2) MAXIMUM QUANTITY ANY TIME	(3) TOTAL YEARLY QUANTITY	(4) STORAGE TYPES	(5) HEALTH & PHYSICAL HAZARDS	(6) PHYS. STATE	(7) HAZARD CLASS	(8) EXTREMELY HAZARDOUS
CARBON DIOXIDE	12,000 lbs.	12,000 lbs.	1	1 X, 2, 3, 4 X, 5	S, L, G X	1A	

(9) HAZARDOUS CHEMICAL INGREDIENTS & PERCENTAGE OF EACH	%	(10) CAS NUMBERS OF EACH INGREDIENT
Carbon Dioxide	99.5 %	124-38-9
Nitrogen	0.34 %	7727-37-9

(1) A ___ C ___ D ___ CHEMICAL OR PRODUCT NAME	(2) MAXIMUM QUANTITY ANY TIME	(3) TOTAL YEARLY QUANTITY	(4) STORAGE TYPES	(5) HEALTH & PHYSICAL HAZARDS	(6) PHYS. STATE	(7) HAZARD CLASS	(8) EXTREMELY HAZARDOUS
NITROGEN	1500 gal.	18,000 gal	1	1 X, 2, 3, 4 X, 5	S, L, G X	1A	

(9) HAZARDOUS CHEMICAL INGREDIENTS & PERCENTAGE OF EACH	%	(10) CAS NUMBERS OF EACH INGREDIENT
Nitrogen	100 %	7727-37-9

FOR OFFICE USE ONLY: INSP. ID ___ INSP. INT. ___ DATE ___ DATA ENTRY ID ___ DATA ENTRY INIT ___ DATE ___

PART B AMENDMENT FOR HAZARDOUS MATERIALS INVENTORY

LAFD # 026645-001-6 PAGE ___ OF ___

LOCATION OF HAZARDOUS MATERIALS: COMPLETE ALL ITEMS IN THIS BOX

BUSINESS NAME Allied-Signal Electrodynamics Division

ADDRESS 11600 Sherman Way, N. Hollywood, CA 91605

ROOM NAME OR NUMBER S3

BUILDING NAME, OUTDOOR AREA, OR UNDERGROUND TANK NUMBERS Acid Room

(1) CHEMICAL OR PRODUCT NAME	(2) MAXIMUM QUANTITY ANY TIME	(3) TOTAL YEARLY QUANTITY	(4) STORAGE TYPES	(5) HEALTH & PHYSICAL HAZARDS	(6) PHYS. STATE	(7) HAZARD CLASS	(8) EXTREMELY HAZARDOUS	(9) HAZARDOUS CHEMICAL INGREDIENTS & PERCENTAGE OF EACH	(10) CAS NUMBERS OF EACH INGREDIENT
Ammonium Hydroxide	200 lb.	10 0 lb.	G	1 X	S			ammonium hydroxide 59.3 %	1336-21-6
				2				(as ammonia) 28.8 %	
				3	L X	2A			
				4					
				5	G				

(1) CHEMICAL OR PRODUCT NAME	(2) MAXIMUM QUANTITY ANY TIME	(3) TOTAL YEARLY QUANTITY	(4) STORAGE TYPES	(5) HEALTH & PHYSICAL HAZARDS	(6) PHYS. STATE	(7) HAZARD CLASS	(8) EXTREMELY HAZARDOUS	(9) HAZARDOUS CHEMICAL INGREDIENTS & PERCENTAGE OF EACH	(10) CAS NUMBERS OF EACH INGREDIENT
				1	S				
				2					
				3	L				
				4					
				5	G				

(1) CHEMICAL OR PRODUCT NAME	(2) MAXIMUM QUANTITY ANY TIME	(3) TOTAL YEARLY QUANTITY	(4) STORAGE TYPES	(5) HEALTH & PHYSICAL HAZARDS	(6) PHYS. STATE	(7) HAZARD CLASS	(8) EXTREMELY HAZARDOUS	(9) HAZARDOUS CHEMICAL INGREDIENTS & PERCENTAGE OF EACH	(10) CAS NUMBERS OF EACH INGREDIENT
				1	S				
				2					
				3	L				
				4					
				5	G				

FOR OFFICE USE ONLY: INSP. ID ___ INSP. INT. ___ DATE ___ DATA ENTRY ID ___ DATA ENTRY INIT ___ DATE ___

'ART B AMENDME( )OR HAZARDOUS MATERIALS INVENTORY

LAFD # 026645-C01-6 PAGE 1 OF ____

NSTRUCTIONS: READ ALL THE INSTRUCTIONS BELOW AND PHOTOCOPY EXTRA COPIES OF THIS FORM BEFORE COMPLETING IT. (REPORT HAZARDOUS WASTE ON PART C)

1. COMPLETE A SEPARATE FORM FOR EACH BUILDING, OUTDOOR AREA, ROOM OR UNDERGROUND TANK IN WHICH HAZARDOUS MATERIALS INVENTORY IS BEING AMENDED. USE BOX BELOW TO SPECIFY THE LOCATION OF THE HAZARDOUS MATERIALS LISTED ON THIS FORM.

OCATION OF HAZARDOUS MATERIALS: COMPLETE ALL ITEMS IN THIS BOX.

USINESS NAME Allied-Signal Electrodynamics Division ADDRESS 11600 Sherman Way, N. Hollywood, CA 91605

OOM NAME OR NUMBER S3 BUILDING NAME, OUTDOOR AREA, OR UNDERGROUND TANK NUMBERS. Acid Room

2. COMPLETE ITEMS 1-10 FOR EACH HAZARDOUS MATERIAL TO BE AMENDED THAT IS STORED OR HANDLED AT THE LOCATION SPECIFIED ABOVE. INCLUDE RAW MATERIALS, FINISHED CHEMICAL PRODUCTS, CHEMICALS MANUFACTURED OR REPACKAGED, AND CHEMICALS DISTRIBUTED.
3. MAKE SURE YOU INDICATE WHETHER THE INFORMATION SHOULD BE ADDED, CHANGED OR DELETED FROM THE CURRENT DISCLOSURE THAT THE FIRE DEPARTMENT HAS ON FILE BY MARKING THE APPROPRIATE CODE UNDER ITEM #1.
4. THE CODES IN ITEM 4, 5 and 7 CAN BE FOUND ON THE ATTACHED TABLE OF CODES.

DDITIONAL INSTRUCTIONS: ITEM 1: CHECK APPROPRIATE CODE: "A" INDICATES A PRODUCT THAT IS BEING ADDED TO YOUR EXISTING INVENTORY, "C" INDICATES A CHANGE N THE INFORMATION THAT WAS REPORTED FOR THAT PRODUCT, "D" INDICATES A PRODUCT THAT HAS BEEN DELETED. ENTER THE CHEMICAL OR PRODUCT NAME. ITEM 2: STIMATE MAXIMUM QUANTITY HANDLED OR STORED AT ANY ONE TIME AT THE ABOVE LOCATION; INCLUDE UNITS (POUNDS, GALLONS, CUBIC FEET). ITEM 3: ESTIMATE ANNUAL MOUNT HANDLED OR STORED AT THE ABOVE LOCATION; INCLUDE UNITS (POUNDS, GALLONS, CUBIC FEET). ITEM 4: LIST ALL THE TYPES OF CONTAINERS USED TO STORE THE RODUCT (USE TABLE 1). ITEM 5: CHECK PHYSICAL HAZARDS (USE TABLE 2). ITEM 6: CHECK THE APPROPRIATE PHYSICAL STATE, ("S" FOR SOLID; "L" FOR LIQUID; "G" OR GAS). ITEM 7: ENTER THE ONE HAZARD CLASS THAT APPLIES TO THE PRODUCT (USE TABLE 3). ITEM 8: CHECK THIS BOX IF PRODUCT OR ANY INGREDIENT IS EXTREMELY AZARDOUS (SEE ATTACHED LIST OF EXTREMELY HAZARDOUS SUBSTANCES). ITEM 9: ENTER INGREDIENTS AND PERCENT OF CONCENTRATION. ITEM 10: ENTER THE CAS CHEMICAL ABSTRACT SERVICE) NUMBERS FOR EACH HAZARDOUS INGREDIENT (USE YOUR MSDS).

(1) CHEMICAL OR PRODUCT NAME: Alodine 1200

(2) MAXIMUM QUANTITY ANY TIME	(3) TOTAL YEARLY QUANTITY	(4) STORAGE TYPES	(5) HEALTH & PHYSICAL HAZARDS	(6) PHYS. STATE	(7) HAZARD CLASS	(8) EXTREMELY HAZARDOUS
75 lb.	25 lb.	C	1 X, 2, 3, 4, 5	S X, L, G	3B	

(9) HAZARDOUS CHEMICAL INGREDIENTS & PERCENTAGE OF EACH		(10) CAS NUMBERS OF EACH INGREDIENT
chromic acid	20-30 %	1333-82-0
potassium ferricyanide	15-20 %	13746-66-2
potassium fluozirconate	10-15 %	16923-95-8
sodium fluoborate	30-40 %	13755-29-8
	%	
	%	

(1) CHEMICAL OR PRODUCT NAME: Potassium Hydroxide

(2) MAXIMUM QUANTITY ANY TIME	(3) TOTAL YEARLY QUANTITY	(4) STORAGE TYPES	(5) HEALTH & PHYSICAL HAZARDS	(6) PHYS. STATE	(7) HAZARD CLASS	(8) EXTREMELY HAZARDOUS
200 lb.	200 lb.	C	1 X, 2, 3, 4, 5	S X, L, G	2A	

(9) HAZARDOUS CHEMICAL INGREDIENTS & PERCENTAGE OF EACH		(10) CAS NUMBERS OF EACH INGREDIENT
potassium hydroxide	%	1310-58-3
	%	
	%	
	%	
	%	
	%	

R OFFICE USE ONLY: INSP. ID INSP. INT. DATE DATA ENTRY ID DATA ENTRY INIT. DATE

PART B AMENDMENT FOR HAZARDOUS MATERIALS INVENTORY

LAFD # 026045-001-6 PAGE ___ OF ___

LOCATION OF HAZARDOUS MATERIALS: COMPLETE ALL ITEMS IN THIS BOX

BUSINESS NAME Allied-Signal Electrodynamics Division ADDRESS 11600 Sherman Way North Hollywood, CA 91605

ROOM NAME OR NUMBER S3 BUILDING NAME, OUTDOOR AREA, OR UNDERGROUND TANK NUMBERS Acid Room

(1) A ___ C ___ D ___ CHEMICAL OR PRODUCT NAME	(2) MAXIMUM QUANTITY ANY TIME	(3) TOTAL YEARLY QUANTITY	(4) STORAGE TYPES	(5) HEALTH & PHYSICAL HAZARDS	(6) PHYS. STATE	(7) HAZARD CLASS	(8) EXTREMELY HAZARDOUS	(9) HAZARDOUS CHEMICAL INGREDIENTS & PERCENTAGE OF EACH	(10) CAS NUMBERS OF EACH INGREDIENT
SODIUM META BISULFITE (GRANULAR)	2200 lbs.	5000 lbs.	F	1 X, 2, 3, 4, 5	S X, L, G	1D		Sodium Meta Bisulfite 100 %	None

(1) A ___ C ___ D ___ CHEMICAL OR PRODUCT NAME	(2) MAXIMUM QUANTITY ANY TIME	(3) TOTAL YEARLY QUANTITY	(4) STORAGE TYPES	(5) HEALTH & PHYSICAL HAZARDS	(6) PHYS. STATE	(7) HAZARD CLASS	(8) EXTREMELY HAZARDOUS	(9) HAZARDOUS CHEMICAL INGREDIENTS & PERCENTAGE OF EACH	(10) CAS NUMBERS OF EACH INGREDIENT
SODIUM CYANIDE	400 lbs.	800 lbs.	B	1 X, 2 X, 3, 4, 5	S X, L, G	5B	X	Sodium Cyanide 98 %	000-143-339

(1) A ___ C ___ D ___ CHEMICAL OR PRODUCT NAME	(2) MAXIMUM QUANTITY ANY TIME	(3) TOTAL YEARLY QUANTITY	(4) STORAGE TYPES	(5) HEALTH & PHYSICAL HAZARDS	(6) PHYS. STATE	(7) HAZARD CLASS	(8) EXTREMELY HAZARDOUS	(9) HAZARDOUS CHEMICAL INGREDIENTS & PERCENTAGE OF EACH	(10) CAS NUMBERS OF EACH INGREDIENT
SODIUM DICHROMATE	500 lb.	1200 lb.	B, F	1 X, 2, 3, 4, 5	S, L X, G	1D		Sodium Dichromate %	7789-12-0

FOR OFFICE USE ONLY: INSP. ID ___ INSP. INT. ___ DATE ___ DATA ENTRY ID ___ DATA ENTRY INIT ___ DATE ___

ART B AMENDMENT FOR HAZARDOUS MATERIALS INVENTORY

LAFD # 026645-001-6 PAGE ___ OF ___

INSTRUCTIONS: READ ALL THE INSTRUCTIONS BELOW AND PHOTOCOPY EXTRA COPIES OF THIS FORM BEFORE COMPLETING IT. (REPORT HAZARDOUS WASTE ON PART C)

1. COMPLETE A SEPARATE FORM FOR EACH BUILDING, OUTDOOR AREA, ROOM OR UNDERGROUND TANK IN WHICH HAZARDOUS MATERIALS INVENTORY IS BEING AMENDED. USE BOX BELOW TO SPECIFY THE LOCATION OF THE HAZARDOUS MATERIALS LISTED ON THIS FORM.

LOCATION OF HAZARDOUS MATERIALS: COMPLETE ALL ITEMS IN THIS BOX.

BUSINESS NAME Allied-Signal Electrodynamics Division ADDRESS 11600 Sherman Way, N. Hollywood, CA 91605

ROOM NAME OR NUMBER S3 BUILDING NAME, OUTDOOR AREA, OR UNDERGROUND TANK NUMBERS. Acid Room

2. COMPLETE ITEMS 1-10 FOR EACH HAZARDOUS MATERIAL TO BE AMENDED THAT IS STORED OR HANDLED AT THE LOCATION SPECIFIED ABOVE. INCLUDE RAW MATERIALS, FINISHED CHEMICAL PRODUCTS, CHEMICALS MANUFACTURED OR REPACKAGED, AND CHEMICALS DISTRIBUTED.
3. MAKE SURE YOU INDICATE WHETHER THE INFORMATION SHOULD BE ADDED, CHANGED OR DELETED FROM THE CURRENT DISCLOSURE THAT THE FIRE DEPARTMENT HAS ON FILE BY MARKING THE APPROPRIATE CODE UNDER ITEM #1.
4. THE CODES IN ITEM 4, 5 and 7 CAN BE FOUND ON THE ATTACHED TABLE OF CODES.

ADDITIONAL INSTRUCTIONS: ITEM 1: CHECK APPROPRIATE CODE: "A" INDICATES A PRODUCT THAT IS BEING ADDED TO YOUR EXISTING INVENTORY, "C" INDICATES A CHANGE IN THE INFORMATION THAT WAS REPORTED FOR THAT PRODUCT, "D" INDICATES A PRODUCT THAT HAS BEEN DELETED. ENTER THE CHEMICAL OR PRODUCT NAME. ITEM 2: ESTIMATE MAXIMUM QUANTITY HANDLED OR STORED AT ANY ONE TIME AT THE ABOVE LOCATION; INCLUDE UNITS (POUNDS, GALLONS, CUBIC FEET). ITEM 3: ESTIMATE ANNUAL AMOUNT HANDLED OR STORED AT THE ABOVE LOCATION; INCLUDE UNITS (POUNDS, GALLONS, CUBIC FEET). ITEM 4: LIST ALL THE TYPES OF CONTAINERS USED TO STORE THE PRODUCT (USE TABLE 1). ITEM 5: CHECK PHYSICAL HAZARDS (USE TABLE 2). ITEM 6: CHECK THE APPROPRIATE PHYSICAL STATE, ("S" FOR SOLID; "L" FOR LIQUID; "G" FOR GAS). ITEM 7: ENTER THE ONE HAZARD CLASS THAT APPLIES TO THE PRODUCT (USE TABLE 3). ITEM 8: CHECK THIS BOX IF PRODUCT OR ANY INGREDIENT IS EXTREMELY HAZARDOUS (SEE ATTACHED LIST OF EXTREMELY HAZARDOUS SUBSTANCES). ITEM 9: ENTER INGREDIENTS AND PERCENT OF CONCENTRATION. ITEM 10: ENTER THE CAS (CHEMICAL ABSTRACT SERVICE) NUMBERS FOR EACH HAZARDOUS INGREDIENT (USE YOUR MSDS).

(1) CHEMICAL OR PRODUCT NAME: Cadmium Oxide

(2) MAXIMUM QUANTITY ANY TIME	(3) TOTAL YEARLY QUANTITY	(4) STORAGE TYPES	(5) HEALTH & PHYSICAL HAZARDS	(6) PHYS. STATE	(7) HAZARD CLASS	(8) EXTREMELY HAZARDOUS
4 gal.	8 gal.	A	1 X, 2 X, 3, 4, 5	S X, L, G	1C	

(9) HAZARDOUS CHEMICAL INGREDIENTS & PERCENTAGE OF EACH		(10) CAS NUMBERS OF EACH INGREDIENT
cadmium	87.5%	1306-19-0

(1) CHEMICAL OR PRODUCT NAME: Econo-CAD-L

(2) MAXIMUM QUANTITY ANY TIME	(3) TOTAL YEARLY QUANTITY	(4) STORAGE TYPES	(5) HEALTH & PHYSICAL HAZARDS	(6) PHYS. STATE	(7) HAZARD CLASS	(8) EXTREMELY HAZARDOUS
25 gal.	25 gal.	A	1 X, 2, 3, 4, 5	S, L X, G	1C	

(9) HAZARDOUS CHEMICAL INGREDIENTS & PERCENTAGE OF EACH		(10) CAS NUMBERS OF EACH INGREDIENT
nickel sulfate	1 %	7786-81-4

FOR OFFICE USE ONLY: INSP. ID INSP. INIT DATE DATA ENTRY ID DATA ENTRY INIT DATE

LOCATION OF HAZARDOUS MATERIALS: COMPLETE ALL ITEMS IN THIS BOX

BUSINESS NAME Allied-Signal Electrodynamics Division ADDRESS 11600 Sherman Way, N. Hollywood, CA 91605

ROOM NAME OR NUMBER S3 BUILDING NAME, OUTDOOR AREA, OR UNDERGROUND TANK NUMBERS Acid Room

A ___ C ___ D ___ (1) CHEMICAL OR PRODUCT NAME: 1081 CHROMIC ACID

(2) MAXIMUM QUANTITY ANY TIME	(3) TOTAL YEARLY QUANTITY	(4) STORAGE TYPES	(5) HEALTH & PHYSICAL HAZARDS	(6) PHYS. STATE	(7) HAZARD CLASS	(8) EXTREMELY HAZARDOUS
200 lb.	3000 lb.	G	1 X, 2, 3, 4, 5	S X, L, G	3B	

(9) HAZARDOUS CHEMICAL INGREDIENTS & PERCENTAGE OF EACH	%	(10) CAS NUMBERS OF EACH INGREDIENT
Chromic Acid (major)	%	7738-94-5

A ___ C ___ D ___ (1) CHEMICAL OR PRODUCT NAME: WYANDOTTE #2487 ALUMINUM DEOXIDIZER

(2) MAXIMUM QUANTITY ANY TIME	(3) TOTAL YEARLY QUANTITY	(4) STORAGE TYPES	(5) HEALTH & PHYSICAL HAZARDS	(6) PHYS. STATE	(7) HAZARD CLASS	(8) EXTREMELY HAZARDOUS
300 lb.	300 lb.	G	1 X, 2, 3, 4, 5	S X, L, G	3B	

(9) HAZARDOUS CHEMICAL INGREDIENTS & PERCENTAGE OF EACH	%	(10) CAS NUMBERS OF EACH INGREDIENT
~~Sodium Bisulfate~~	80 %	7789-12-0
Chromic Acid	10 %	7738-94-5

A ___ C ___ D ___ (1) CHEMICAL OR PRODUCT NAME: SULFURIC ACID, CONCENTRATED

(2) MAXIMUM QUANTITY ANY TIME	(3) TOTAL YEARLY QUANTITY	(4) STORAGE TYPES	(5) HEALTH & PHYSICAL HAZARDS	(6) PHYS. STATE	(7) HAZARD CLASS	(8) EXTREMELY HAZARDOUS
1000 lbs.	2600 lbs.	B	1 X, 2, 3, 4, 5	S, L X, G	3B	X

(9) HAZARDOUS CHEMICAL INGREDIENTS & PERCENTAGE OF EACH	%	(10) CAS NUMBERS OF EACH INGREDIENT
Hydrogen Sulfate	93-98 %	007-664-939

FOR OFFICE USE ONLY: INSP. ID ___ INSP. INT. ___ DATE ___ DATA ENTRY ID ___ DATA ENTRY INIT ___ DATE ___

ART B AMENDMEN OR HAZARDOUS MATERIALS INVENTORY

LAFD # 026645-001-0 PAGE ___ OF ___

NSTRUCTIONS: READ ALL THE INSTRUCTIONS BELOW AND PHOTOCOPY EXTRA COPIES OF THIS FORM BEFORE COMPLETING IT. (REPORT HAZARDOUS WASTE ON PART C)

1. COMPLETE A SEPARATE FORM FOR EACH BUILDING, OUTDOOR AREA, ROOM OR UNDERGROUND TANK IN WHICH HAZARDOUS MATERIALS INVENTORY IS BEING AMENDED. USE BOX BELOW TO SPECIFY THE LOCATION OF THE HAZARDOUS MATERIALS LISTED ON THIS FORM.

OCATION OF HAZARDOUS MATERIALS: COMPLETE ALL ITEMS IN THIS BOX.

USINESS NAME Allied-Signal Electrodynamics Division ADDRESS 11600 Sherman Way, N. Hollywood, CA 91605

OOM NAME OR NUMBER S3 BUILDING NAME, OUTDOOR AREA, OR UNDERGROUND TANK NUMBERS. Acid Room

2. COMPLETE ITEMS 1-10 FOR EACH HAZARDOUS MATERIAL TO BE AMENDED THAT IS STORED OR HANDLED AT THE LOCATION SPECIFIED ABOVE. INCLUDE RAW MATERIALS, FINISHED CHEMICAL PRODUCTS, CHEMICALS MANUFACTURED OR REPACKAGED, AND CHEMICALS DISTRIBUTED.
3. MAKE SURE YOU INDICATE WHETHER THE INFORMATION SHOULD BE ADDED, CHANGED OR DELETED FROM THE CURRENT DISCLOSURE THAT THE FIRE DEPARTMENT HAS ON FILE BY MARKING THE APPROPRIATE CODE UNDER ITEM #1.
4. THE CODES IN ITEM 4, 5 and 7 CAN BE FOUND ON THE ATTACHED TABLE OF CODES.

DDITIONAL INSTRUCTIONS: ITEM 1: CHECK APPROPRIATE CODE: "A" INDICATES A PRODUCT THAT IS BEING ADDED TO YOUR EXISTING INVENTORY, "C" INDICATES A CHANGE I THE INFORMATION THAT WAS REPORTED FOR THAT PRODUCT, "D" INDICATES A PRODUCT THAT HAS BEEN DELETED. ENTER THE CHEMICAL OR PRODUCT NAME. ITEM 2: STIMATE MAXIMUM QUANTITY HANDLED OR STORED AT ANY ONE TIME AT THE ABOVE LOCATION; INCLUDE UNITS (POUNDS, GALLONS, CUBIC FEET). ITEM 3: ESTIMATE ANNUAL OUNT HANDLED OR STORED AT THE ABOVE LOCATION; INCLUDE UNITS (POUNDS, GALLONS, CUBIC FEET). ITEM 4: LIST ALL THE TYPES OF CONTAINERS USED TO STORE THE ODUCT (USE TABLE 1). ITEM 5: CHECK PHYSICAL HAZARDS (USE TABLE 2). ITEM 6: CHECK THE APPROPRIATE PHYSICAL STATE, ("S" FOR SOLID; "L" FOR LIQUID; "G" R GAS). ITEM 7: ENTER THE ONE HAZARD CLASS THAT APPLIES TO THE PRODUCT (USE TABLE 3). ITEM 8: CHECK THIS BOX IF PRODUCT OR ANY INGREDIENT IS EXTREMELY ZARDOUS (SEE ATTACHED LIST OF EXTREMELY HAZARDOUS SUBSTANCES). ITEM 9: ENTER INGREDIENTS AND PERCENT OF CONCENTRATION. ITEM 10: ENTER THE CAS HEMICAL ABSTRACT SERVICE) NUMBERS FOR EACH HAZARDOUS INGREDIENT (USE YOUR MSDS).

(1) CHEMICAL OR PRODUCT NAME	(2) MAXIMUM QUANTITY ANY TIME	(3) TOTAL YEARLY QUANTITY	(4) STORAGE TYPES	(5) HEALTH & PHYSICAL HAZARDS	(6) PHYS. STATE	(7) HAZARD CLASS	(8) EXTREMELY HAZARDOUS	(9) HAZARDOUS CHEMICAL INGREDIENTS & PERCENTAGE OF EACH	(10) CAS NUMBERS OF EACH INGREDIENT
Wyandotte Altrex #1097	375 lb.	375 lb.	B	1 X	S X	2A		sodium metasilicate 30 %	6834-92-0
				2				%	
				3	L			%	
				4				%	
				5	G			%	
								%	
								%	

(1) CHEMICAL OR PRODUCT NAME	(2) MAXIMUM QUANTITY ANY TIME	(3) TOTAL YEARLY QUANTITY	(4) STORAGE TYPES	(5) HEALTH & PHYSICAL HAZARDS	(6) PHYS. STATE	(7) HAZARD CLASS	(8) EXTREMELY HAZARDOUS	(9) HAZARDOUS CHEMICAL INGREDIENTS & PERCENTAGE OF EACH	(10) CAS NUMBERS OF EACH INGREDIENT
Fluoboric Acid	110 lb.	110 lb.	B	1 X	S			fluoboric acid 48 %	16872-11-0
				2				%	
				3	L X	2A		%	
				4				%	
				5	G			%	
								%	
								%	

OFFICE USE ONLY: INSP. ID INSP. INT. DATE DATA ENTRY ID DATA ENTRY INIT DATE

PART B AMENDMENT FOR HAZARDOUS MATERIALS INVENTORY

LAFD # 026645-001-4 PAGE 1 OF

LOCATION OF HAZARDOUS MATERIALS: COMPLETE ALL ITEMS IN THIS BOX

BUSINESS NAME: Allied-Signal Electrodynamics Division

ADDRESS: 11600 Sherman Way, N. Hollywood, CA 91605

ROOM NAME OR NUMBER: S7

BUILDING NAME, OUTDOOR AREA, OR UNDERGROUND TANK NUMBERS: Cutting Oil and Coolant Storage Area

A ___ C ___ D ___

(1) CHEMICAL OR PRODUCT NAME: Breeze #2271-SSDR (cleaning Compound)

(2) MAXIMUM QUANTITY ANY TIME	(3) TOTAL YEARLY QUANTITY	(4) STORAGE TYPES	(5) HEALTH & PHYSICAL HAZARDS	(6) PHYS. STATE	(7) HAZARD CLASS	(8) EXTREMELY HAZARDOUS
275 gal.	2200 gal.	B	1 X, 2, 3, 4, 5	S, L X, G	1C	

(9) HAZARDOUS CHEMICAL INGREDIENTS & PERCENTAGE OF EACH		(10) CAS NUMBERS OF EACH INGREDIENT
no hazardous ingredients	%	
	%	
	%	
	%	
	%	
	%	

A ___ C ___ D ___

(1) CHEMICAL OR PRODUCT NAME: Cerfa-Kleen 5382

(2) MAXIMUM QUANTITY ANY TIME	(3) TOTAL YEARLY QUANTITY	(4) STORAGE TYPES	(5) HEALTH & PHYSICAL HAZARDS	(6) PHYS. STATE	(7) HAZARD CLASS	(8) EXTREMELY HAZARDOUS
330 gal.	330 gal.	B	1 X, 2, 3, 4, 5	S, L X, G	1C	

(9) HAZARDOUS CHEMICAL INGREDIENTS & PERCENTAGE OF EACH		(10) CAS NUMBERS OF EACH INGREDIENT
no hazardous ingredients	%	
	%	
	%	
	%	
	%	
	%	

A ___ C ___ D ___

(1) CHEMICAL OR PRODUCT NAME:

(2) MAXIMUM QUANTITY ANY TIME	(3) TOTAL YEARLY QUANTITY	(4) STORAGE TYPES	(5) HEALTH & PHYSICAL HAZARDS	(6) PHYS. STATE	(7) HAZARD CLASS	(8) EXTREMELY HAZARDOUS
			1, 2, 3, 4, 5	S, L, G		

(9) HAZARDOUS CHEMICAL INGREDIENTS & PERCENTAGE OF EACH		(10) CAS NUMBERS OF EACH INGREDIENT
	%	
	%	
	%	
	%	
	%	
	%	

FOR OFFICE USE ONLY: INSP. ID ___ INSP. INT. ___ DATE ___ DATA ENTRY ID ___ DATA ENTRY INIT ___ DATE ___

PART B - INVENTORY FOR HAZARDOUS MATERIALS INVENTORY LAYD # 020045-001-0 PAGE ___ OF ___

INSTRUCTIONS: READ ALL THE INSTRUCTIONS BELOW AND PHOTOCOPY EXTRA COPIES OF THIS FORM BEFORE COMPLETING IT. (REPORT HAZARDOUS WASTE ON PART C)

1. COMPLETE A SEPARATE FORM FOR EACH BUILDING, OUTDOOR AREA, ROOM OR UNDERGROUND TANK IN WHICH HAZARDOUS MATERIALS INVENTORY IS BEING AMENDED. USE BOX BELOW TO SPECIFY THE LOCATION OF THE HAZARDOUS MATERIALS LISTED ON THIS FORM.

LOCATION OF HAZARDOUS MATERIALS: COMPLETE ALL ITEMS IN THIS BOX.

BUSINESS NAME Allied-Signal Electrodynamics Division ADDRESS 11600 Sherman Way North Hollywood, CA 91605

ROOM NAME OR NUMBER S3 BUILDING NAME, OUTDOOR AREA, OR UNDERGROUND TANK NUMBERS. Acid Room

2. COMPLETE ITEMS 1-10 FOR EACH HAZARDOUS MATERIAL TO BE AMENDED THAT IS STORED OR HANDLED AT THE LOCATION SPECIFIED ABOVE. INCLUDE RAW MATERIALS, FINISHED CHEMICAL PRODUCTS, CHEMICALS MANUFACTURED OR REPACKAGED, AND CHEMICALS DISTRIBUTED.
3. MAKE SURE YOU INDICATE WHETHER THE INFORMATION SHOULD BE ADDED, CHANGED OR DELETED FROM THE CURRENT DISCLOSURE THAT THE FIRE DEPARTMENT HAS ON FILE BY MARKING THE APPROPRIATE CODE UNDER ITEM #1.
4. THE CODES IN ITEM 4, 5 and 7 CAN BE FOUND ON THE ATTACHED TABLE OF CODES.

ADDITIONAL INSTRUCTIONS: ITEM 1: CHECK APPROPRIATE CODE: "A" INDICATES A PRODUCT THAT IS BEING ADDED TO YOUR EXISTING INVENTORY, "C" INDICATES A CHANGE IN THE INFORMATION THAT WAS REPORTED FOR THAT PRODUCT, "D" INDICATES A PRODUCT THAT HAS BEEN DELETED. ENTER THE CHEMICAL OR PRODUCT NAME. ITEM 2: ESTIMATE MAXIMUM QUANTITY HANDLED OR STORED AT ANY ONE TIME AT THE ABOVE LOCATION; INCLUDE UNITS (POUNDS, GALLONS, CUBIC FEET). ITEM 3: ESTIMATE ANNUAL AMOUNT HANDLED OR STORED AT THE ABOVE LOCATION; INCLUDE UNITS (POUNDS, GALLONS, CUBIC FEET). ITEM 4: LIST ALL THE TYPES OF CONTAINERS USED TO STORE THE PRODUCT (USE TABLE 1). ITEM 5: CHECK PHYSICAL HAZARDS (USE TABLE 2). ITEM 6: CHECK THE APPROPRIATE PHYSICAL STATE, ("S" FOR SOLID; "L" FOR LIQUID; "G" FOR GAS). ITEM 7: ENTER THE ONE HAZARD CLASS THAT APPLIES TO THE PRODUCT (USE TABLE 3). ITEM 8: CHECK THIS BOX IF PRODUCT OR ANY INGREDIENT IS EXTREMELY HAZARDOUS (SEE ATTACHED LIST OF EXTREMELY HAZARDOUS SUBSTANCES). ITEM 9: ENTER INGREDIENTS AND PERCENT OF CONCENTRATION. ITEM 10: ENTER THE CAS (CHEMICAL ABSTRACT SERVICE) NUMBERS FOR EACH HAZARDOUS INGREDIENT (USE YOUR MSDS).

(1) A ___ C ___ D ___ CHEMICAL OR PRODUCT NAME: SODIUM HYDROXIDE (50% Solution)

(2) MAXIMUM QUANTITY ANY TIME	(3) TOTAL YEARLY QUANTITY	(4) STORAGE TYPES	(5) HEALTH & PHYSICAL HAZARDS	(6) PHYS. STATE	(7) HAZARD CLASS	(8) EXTREMELY HAZARDOUS
2800 lb.	5600 lb.	B	1 X	S		
			2			
			3	L X	2A	
			4			
			5 X	G		

(9) HAZARDOUS CHEMICAL INGREDIENTS & PERCENTAGE OF EACH	%	(10) CAS NUMBERS OF EACH INGREDIENT
Sodium Hydroxide	50 %	1310-73-2
	%	
	%	
	%	
	%	

(1) A ___ C ___ D ___ CHEMICAL OR PRODUCT NAME: SODIUM HYDROXIDE (TECH GRADE-BEAD)

(2) MAXIMUM QUANTITY ANY TIME	(3) TOTAL YEARLY QUANTITY	(4) STORAGE TYPES	(5) HEALTH & PHYSICAL HAZARDS	(6) PHYS. STATE	(7) HAZARD CLASS	(8) EXTREMELY HAZARDOUS
300 lbs.	300 lbs.	F	1 X	S X		
			2			
			3	L	2A	
			4			
			5 X	G		

(9) HAZARDOUS CHEMICAL INGREDIENTS & PERCENTAGE OF EACH	%	(10) CAS NUMBERS OF EACH INGREDIENT
sodium hydroxide	50 %	1310-73-2
	%	
	%	
	%	
	%	

FOR OFFICE USE ONLY: INSP. ID ___ INSP. INT. ___ DATE ___ DATA ENTRY ID ___ DATA ENTRY INIT ___ DATE ___

PART B AMENDMENT FOR HAZARDOUS MATERIALS INVENTORY

LAFD # 026645-001-6 PAGE ___ OF ___

LOCATION OF HAZARDOUS MATERIALS: COMPLETE ALL ITEMS IN THIS BOX

BUSINESS NAME Allied-Signal Electrodynamics Division ADDRESS 11600 Sherman Way, N. Hollywood, CA 91605

ROOM NAME OR NUMBER S7 BUILDING NAME, OUTDOOR AREA, OR UNDERGROUND TANK NUMBERS Cutting Oil and Coolant Storage Area

A ___ C ___ D ___ (1) CHEMICAL OR PRODUCT NAME: OIL, MOBIL VELOCITE #10

(2) MAXIMUM QUANTITY ANY TIME	(3) TOTAL YEARLY QUANTITY	(4) STORAGE TYPES	(5) HEALTH & PHYSICAL HAZARDS	(6) PHYS. STATE	(7) HAZARD CLASS	(8) EXTREMELY HAZARDOUS
220 gal.	220 gal.	B	1 X, 2, 3, 4, 5	S, L X, G	1B	

(9) HAZARDOUS CHEMICAL INGREDIENTS & PERCENTAGE OF EACH		(10) CAS NUMBERS OF EACH INGREDIENT
	%	
No hazardous constituents	%	
Refined mineral oil	> 95%	
Additives	< 5%	
	%	
	%	

A ___ C ___ D ___ (1) CHEMICAL OR PRODUCT NAME: Oil, DTE Light

(2) MAXIMUM QUANTITY ANY TIME	(3) TOTAL YEARLY QUANTITY	(4) STORAGE TYPES	(5) HEALTH & PHYSICAL HAZARDS	(6) PHYS. STATE	(7) HAZARD CLASS	(8) EXTREMELY HAZARDOUS
110 gal.	110 gal.	B	1 X, 2, 3, 4, 5	S, L X, G	1B	

(9) HAZARDOUS CHEMICAL INGREDIENTS & PERCENTAGE OF EACH		(10) CAS NUMBERS OF EACH INGREDIENT
No hazardous constituents	%	
Refined mineral oils	95 %	
additives	5 %	
	%	
	%	
	%	

A ___ C ___ D ___ (1) CHEMICAL OR PRODUCT NAME:

(2) MAXIMUM QUANTITY ANY TIME	(3) TOTAL YEARLY QUANTITY	(4) STORAGE TYPES	(5) HEALTH & PHYSICAL HAZARDS	(6) PHYS. STATE	(7) HAZARD CLASS	(8) EXTREMELY HAZARDOUS
			1, 2, 3, 4, 5	S, L, G		

(9) HAZARDOUS CHEMICAL INGREDIENTS & PERCENTAGE OF EACH		(10) CAS NUMBERS OF EACH INGREDIENT
	%	
	%	
	%	
	%	
	%	
	%	

FOR OFFICE USE ONLY: INSP. ID ___ INSP. INT. ___ DATE ___ DATA ENTRY ID ___ DATA ENTRY INIT ___ DATE ___

PART B AMENDMENT FOR HAZARDOUS MATERIALS INVENTORY

LAFD # _____ PAGE ____ OF ____

INSTRUCTIONS: READ ALL THE INSTRUCTIONS BELOW AND PHOTOCOPY EXTRA COPIES OF THIS FORM BEFORE COMPLETING IT. (REPORT HAZARDOUS WASTE ON PART C)

1. COMPLETE A SEPARATE FORM FOR EACH BUILDING, OUTDOOR AREA, ROOM OR UNDERGROUND TANK IN WHICH HAZARDOUS MATERIALS INVENTORY IS BEING AMENDED. USE BOX BELOW TO SPECIFY THE LOCATION OF THE HAZARDOUS MATERIALS LISTED ON THIS FORM.

LOCATION OF HAZARDOUS MATERIALS: COMPLETE ALL ITEMS IN THIS BOX.

BUSINESS NAME: Allied-Signal Electrodynamics Division ADDRESS: 11600 Sherman Way, N. Hollywood, CA 91605

ROOM NAME OR NUMBER: S3 BUILDING NAME, OUTDOOR AREA, OR UNDERGROUND TANK NUMBERS: Acid Room

2. COMPLETE ITEMS 1-10 FOR EACH HAZARDOUS MATERIAL TO BE AMENDED THAT IS STORED OR HANDLED AT THE LOCATION SPECIFIED ABOVE. INCLUDE RAW MATERIALS, FINISHED CHEMICAL PRODUCTS, CHEMICALS MANUFACTURED OR REPACKAGED, AND CHEMICALS DISTRIBUTED.
3. MAKE SURE YOU INDICATE WHETHER THE INFORMATION SHOULD BE ADDED, CHANGED OR DELETED FROM THE CURRENT DISCLOSURE THAT THE FIRE DEPARTMENT HAS ON FILE BY MARKING THE APPROPRIATE CODE UNDER ITEM #1.
4. THE CODES IN ITEM 4, 5 and 7 CAN BE FOUND ON THE ATTACHED TABLE OF CODES.

ADDITIONAL INSTRUCTIONS: ITEM 1: CHECK APPROPRIATE CODE: "A" INDICATES A PRODUCT THAT IS BEING ADDED TO YOUR EXISTING INVENTORY, "C" INDICATES A CHANGE IN THE INFORMATION THAT WAS REPORTED FOR THAT PRODUCT, "D" INDICATES A PRODUCT THAT HAS BEEN DELETED. ENTER THE CHEMICAL OR PRODUCT NAME. ITEM 2: ESTIMATE MAXIMUM QUANTITY HANDLED OR STORED AT ANY ONE TIME AT THE ABOVE LOCATION; INCLUDE UNITS (POUNDS, GALLONS, CUBIC FEET). ITEM 3: ESTIMATE ANNUAL AMOUNT HANDLED OR STORED AT THE ABOVE LOCATION; INCLUDE UNITS (POUNDS, GALLONS, CUBIC FEET). ITEM 4: LIST ALL THE TYPES OF CONTAINERS USED TO STORE THE PRODUCT (USE TABLE 1). ITEM 5: CHECK PHYSICAL HAZARDS (USE TABLE 2). ITEM 6: CHECK THE APPROPRIATE PHYSICAL STATE, ("S" FOR SOLID; "L" FOR LIQUID; "G" FOR GAS). ITEM 7: ENTER THE ONE HAZARD CLASS THAT APPLIES TO THE PRODUCT (USE TABLE 3). ITEM 8: CHECK THIS BOX IF PRODUCT OR ANY INGREDIENT IS EXTREMELY HAZARDOUS (SEE ATTACHED LIST OF EXTREMELY HAZARDOUS SUBSTANCES). ITEM 9: ENTER INGREDIENTS AND PERCENT OF CONCENTRATION. ITEM 10: ENTER THE CAS (CHEMICAL ABSTRACT SERVICE) NUMBERS FOR EACH HAZARDOUS INGREDIENT (USE YOUR MSDS).

(1) A ___ C ___ D ___ CHEMICAL OR PRODUCT NAME	(2) MAXIMUM QUANTITY ANY TIME	(3) TOTAL YEARLY QUANTITY	(4) STORAGE TYPES	(5) HEALTH & PHYSICAL HAZARDS	(6) PHYS. STATE	(7) HAZARD CLASS	(8) EXTREMELY HAZARDOUS	(9) HAZARDOUS CHEMICAL INGREDIENTS & PERCENTAGE OF EACH	(10) CAS NUMBERS OF EACH INGREDIENT
CHROMIC ACID, FLAKE	200 lbs.	3000 lbs.	B	1 X, 2 X, 3, 4, 5	S X, L, G	3B		Chromium Trioxide >95 %	001-333-820

(1) A ___ C ___ D ___ CHEMICAL OR PRODUCT NAME	(2) MAXIMUM QUANTITY ANY TIME	(3) TOTAL YEARLY QUANTITY	(4) STORAGE TYPES	(5) HEALTH & PHYSICAL HAZARDS	(6) PHYS. STATE	(7) HAZARD CLASS	(8) EXTREMELY HAZARDOUS	(9) HAZARDOUS CHEMICAL INGREDIENTS & PERCENTAGE OF EACH	(10) CAS NUMBERS OF EACH INGREDIENT
NITRIC ACID	400 lb.	1000 lb.	B	1 X, 2, 3, 4, 5 X	S, L X, G	3B		Nitric Acid 50-70 %	007-697-372

FOR OFFICE USE ONLY: INSP. ID _____ INSP. INT. _____ DATE _____ DATA ENTRY ID _____ DATA ENTRY INIT _____ DATE _____

PART B AMENDMENT FOR HAZARDOUS MATERIALS INVENTORY

LAFD # 026645-001-6 PAGE ___ OF ___

LOCATION OF HAZARDOUS MATERIALS: COMPLETE ALL ITEMS IN THIS BOX

BUSINESS NAME Allied-Signal Electrodynamics Division ADDRESS 11600 Sherman Way, N. Hollywood, CA 91605

ROOM NAME OR NUMBER S7 BUILDING NAME, OUTDOOR AREA, OR UNDERGROUND TANK NUMBERS Cutting Oil and Coolant Storage Area

(1) A ___ C ___ D ___ CHEMICAL OR PRODUCT NAME	(2) MAXIMUM QUANTITY ANY TIME	(3) TOTAL YEARLY QUANTITY	(4) STORAGE TYPES	(5) HEALTH & PHYSICAL HAZARDS	(6) PHYS. STATE	(7) HAZARD CLASS	(8) EXTREMELY HAZARDOUS	(9) HAZARDOUS CHEMICAL INGREDIENTS & PERCENTAGE OF EACH	(10) CAS NUMBERS OF EACH INGREDIENT
Aircraft Hydraulic Fluid, MIL-H 5606E								Refined solvent petroleum ___ %	
								base stock ___ %	64742-46-7
								___ %	
				1 ___ 2 ___	S ___			___ %	
			___	3 ___ 4 ___	L ___	___	___	___ %	
			___	5 ___	G ___			___ %	

(1) A ___ C ___ D ___ CHEMICAL OR PRODUCT NAME	(2) MAXIMUM QUANTITY ANY TIME	(3) TOTAL YEARLY QUANTITY	(4) STORAGE TYPES	(5) HEALTH & PHYSICAL HAZARDS	(6) PHYS. STATE	(7) HAZARD CLASS	(8) EXTREMELY HAZARDOUS	(9) HAZARDOUS CHEMICAL INGREDIENTS & PERCENTAGE OF EACH	(10) CAS NUMBERS OF EACH INGREDIENT
Petrofluid 3806 (Hydraulic Fluid) MIL-H-6083E								Refined solvent petroleum ___ %	64741-97-5
								base stock ___ %	64742-96-7
								___ %	64742-53-6
	275 gal.	800 gal.	B	1 X 2 ___	S ___			___ %	
			___	3 ___ 4 ___	L X	1B	___	___ %	
			___	5 ___	G ___			___ %	

(1) A ___ C ___ D ___ CHEMICAL OR PRODUCT NAME	(2) MAXIMUM QUANTITY ANY TIME	(3) TOTAL YEARLY QUANTITY	(4) STORAGE TYPES	(5) HEALTH & PHYSICAL HAZARDS	(6) PHYS. STATE	(7) HAZARD CLASS	(8) EXTREMELY HAZARDOUS	(9) HAZARDOUS CHEMICAL INGREDIENTS & PERCENTAGE OF EACH	(10) CAS NUMBERS OF EACH INGREDIENT
Pennwalt SGC 3821A (Coolant Fluid)								Mineral Oil < 10 %	64741-96-4
								Diethanolamine < 5 %	111-42-2
								Hexylene Glycol < 5 %	107-41-5
								___ %	
	440 gal.	1760 gal.	B	1 X 2 ___	S ___			___ %	
			___	3 X 4 ___	L X	1B	___	___ %	
			___	5 ___	G ___			___ %	

FOR OFFICE USE ONLY: INSP. ID ___ INSP. INT. ___ DATE ___ DATA ENTRY ID ___ DATA ENTRY INIT ___ DATE ___

PART B AMENDMENT FOR HAZARDOUS MATERIALS INVENTORY

LAFD # 026645-001-6 PAGE ____ OF ____

INSTRUCTIONS: READ ALL THE INSTRUCTIONS BELOW AND PHOTOCOPY EXTRA COPIES OF THIS FORM BEFORE COMPLETING IT. (REPORT HAZARDOUS WASTE ON PART C)

1. COMPLETE A SEPARATE FORM FOR EACH BUILDING, OUTDOOR AREA, ROOM OR UNDERGROUND TANK IN WHICH HAZARDOUS MATERIALS INVENTORY IS BEING AMENDED. USE BOX BELOW TO SPECIFY THE LOCATION OF THE HAZARDOUS MATERIALS LISTED ON THIS FORM.

LOCATION OF HAZARDOUS MATERIALS: COMPLETE ALL ITEMS IN THIS BOX.

BUSINESS NAME: Allied-Signal Electrodynamics Division ADDRESS: 11600 Sherman Way, N. Hollywood, CA 91605

ROOM NAME OR NUMBER: S7 BUILDING NAME, OUTDOOR AREA, OR UNDERGROUND TANK NUMBERS: Cutting Oil and Coolant Storage Area

2. COMPLETE ITEMS 1-10 FOR EACH HAZARDOUS MATERIAL TO BE AMENDED THAT IS STORED OR HANDLED AT THE LOCATION SPECIFIED ABOVE. INCLUDE RAW MATERIALS, FINISHED CHEMICAL PRODUCTS, CHEMICALS MANUFACTURED OR REPACKAGED, AND CHEMICALS DISTRIBUTED.
3. MAKE SURE YOU INDICATE WHETHER THE INFORMATION SHOULD BE ADDED, CHANGED OR DELETED FROM THE CURRENT DISCLOSURE THAT THE FIRE DEPARTMENT HAS ON FILE BY MARKING THE APPROPRIATE CODE UNDER ITEM #1.
4. THE CODES IN ITEM 4, 5 and 7 CAN BE FOUND ON THE ATTACHED TABLE OF CODES.

ADDITIONAL INSTRUCTIONS: ITEM 1: CHECK APPROPRIATE CODE: "A" INDICATES A PRODUCT THAT IS BEING ADDED TO YOUR EXISTING INVENTORY, "C" INDICATES A CHANGE IN THE INFORMATION THAT WAS REPORTED FOR THAT PRODUCT, "D" INDICATES A PRODUCT THAT HAS BEEN DELETED. ENTER THE CHEMICAL OR PRODUCT NAME. ITEM 2: ESTIMATE MAXIMUM QUANTITY HANDLED OR STORED AT ANY ONE TIME AT THE ABOVE LOCATION; INCLUDE UNITS (POUNDS, GALLONS, CUBIC FEET). ITEM 3: ESTIMATE ANNUAL AMOUNT HANDLED OR STORED AT THE ABOVE LOCATION; INCLUDE UNITS (POUNDS, GALLONS, CUBIC FEET). ITEM 4: LIST ALL THE TYPES OF CONTAINERS USED TO STORE THE PRODUCT (USE TABLE 1). ITEM 5: CHECK PHYSICAL HAZARDS (USE TABLE 2). ITEM 6: CHECK THE APPROPRIATE PHYSICAL STATE, ("S" FOR SOLID; "L" FOR LIQUID; "G" FOR GAS). ITEM 7: ENTER THE ONE HAZARD CLASS THAT APPLIES TO THE PRODUCT (USE TABLE 3). ITEM 8: CHECK THIS BOX IF PRODUCT OR ANY INGREDIENT IS EXTREMELY HAZARDOUS (SEE ATTACHED LIST OF EXTREMELY HAZARDOUS SUBSTANCES). ITEM 9: ENTER INGREDIENTS AND PERCENT OF CONCENTRATION. ITEM 10: ENTER THE CAS (CHEMICAL ABSTRACT SERVICE) NUMBERS FOR EACH HAZARDOUS INGREDIENT (USE YOUR MSDS).

(1) CHEMICAL OR PRODUCT NAME: Trimsol

(2) MAXIMUM QUANTITY ANY TIME	(3) TOTAL YEARLY QUANTITY	(4) STORAGE TYPES	(5) HEALTH & PHYSICAL HAZARDS	(6) PHYS. STATE	(7) HAZARD CLASS	(8) EXTREMELY HAZARDOUS
165 gal.	800 gal.	B	1 N/A	S	1B	
			2	L X		
			3			
			4			
			5	G		

(9) HAZARDOUS CHEMICAL INGREDIENTS & PERCENTAGE OF EACH		(10) CAS NUMBERS OF EACH INGREDIENT
Nonhazardous mixture	%	
Petroleum Oil, Non-Ionic	%	
Surfactants, Wax, Petroleum	%	
Sulfonate, Odorants, Defoamer	%	
Dye & Water.	%	
	%	

(1) CHEMICAL OR PRODUCT NAME: Blasocut 2000

(2) MAXIMUM QUANTITY ANY TIME	(3) TOTAL YEARLY QUANTITY	(4) STORAGE TYPES	(5) HEALTH & PHYSICAL HAZARDS	(6) PHYS. STATE	(7) HAZARD CLASS	(8) EXTREMELY HAZARDOUS
55 gal.	55 gal.	B	1	S		
			2			
			3 N/A	L X	1B	
			4			
			5	G		

(9) HAZARDOUS CHEMICAL INGREDIENTS & PERCENTAGE OF EACH		(10) CAS NUMBERS OF EACH INGREDIENT
Non-hazardous mixture	%	
mineral oil, paraffins,	%	
corrosion & fungi	%	
inhibitors, odorant and dye	%	
	%	
	%	

FOR OFFICE USE ONLY: INSP. ID ____ DATE ____ DATA ENTRY ID ____ DATA ENTRY UNIT ____ DATE ____

PART B AMENDMENT FOR HAZARDOUS MATERIALS INVENTORY

LAFD # 020645-001-0 PAGE ____ OF ____

LOCATION OF HAZARDOUS MATERIALS: COMPLETE ALL ITEMS IN THIS BOX

BUSINESS NAME: Allied-Signal Electrodynamics Division

ADDRESS: 11600 Sherman Way, N. Hollywood, CA 91605

ROOM NAME OR NUMBER: S7

BUILDING NAME, OUTDOOR AREA, OR UNDERGROUND TANK NUMBERS: Cutting Oil and Coolant Storage Area

A ___ C ___ D ___

(1) CHEMICAL OR PRODUCT NAME: Oil, DTE Extra Heavy

(2) MAXIMUM QUANTITY ANY TIME	(3) TOTAL YEARLY QUANTITY	(4) STORAGE TYPES	(5) HEALTH & PHYSICAL HAZARDS	(6) PHYS. STATE	(7) HAZARD CLASS	(8) EXTREMELY HAZARDOUS
110 gal.	110 gal.	B	1 X, 2, 3, 4, 5	S, L X, G	1B	

(9) HAZARDOUS CHEMICAL INGREDIENTS & PERCENTAGE OF EACH		(10) CAS NUMBERS OF EACH INGREDIENT
No Hazardous Constituents	%	
Refined Mineral Oils	> 95 %	
Additive	< 5 %	
	%	
	%	
	%	

A ___ C ___ D ___

(1) CHEMICAL OR PRODUCT NAME: Hydraulic Oil, DTE 26

(2) MAXIMUM QUANTITY ANY TIME	(3) TOTAL YEARLY QUANTITY	(4) STORAGE TYPES	(5) HEALTH & PHYSICAL HAZARDS	(6) PHYS. STATE	(7) HAZARD CLASS	(8) EXTREMELY HAZARDOUS
165 gal.	275 gal.	B	1 X, 2, 3, 4, 5	S, L X, G	1B	

(9) HAZARDOUS CHEMICAL INGREDIENTS & PERCENTAGE OF EACH		(10) CAS NUMBERS OF EACH INGREDIENT
No hazardous constituents	%	
Refined mineral oils	> 95 %	
additives	< 5 %	
	%	
	%	
	%	

A ___ C ___ D ___

(1) CHEMICAL OR PRODUCT NAME: Oil, DTE Heavy Medium

(2) MAXIMUM QUANTITY ANY TIME	(3) TOTAL YEARLY QUANTITY	(4) STORAGE TYPES	(5) HEALTH & PHYSICAL HAZARDS	(6) PHYS. STATE	(7) HAZARD CLASS	(8) EXTREMELY HAZARDOUS
110 gal.	110 gal.	B	1 X, 2, 3, 4, 5	S, L X, G	1B	

(9) HAZARDOUS CHEMICAL INGREDIENTS & PERCENTAGE OF EACH		(10) CAS NUMBERS OF EACH INGREDIENT
No hazardous constituents	%	
Refined mineral oils	> 95 %	
additives	< 5 %	
	%	
	%	
	%	

FOR OFFICE USE ONLY: INSP. ID ____ INSP. INT. ____ DATE ____ DATA ENTRY ID ____ DATA ENTRY INIT ____ DATE ____

PART B AMENDMENT FOR HAZARDOUS MATERIALS INVENTORY

LAFD # 020049-001-0 PAGE ____ OF ____

INSTRUCTIONS: READ ALL THE INSTRUCTIONS BELOW AND PHOTOCOPY EXTRA COPIES OF THIS FORM BEFORE COMPLETING IT. (REPORT HAZARDOUS WASTE ON PART C)

1. COMPLETE A SEPARATE FORM FOR EACH BUILDING, OUTDOOR AREA, ROOM OR UNDERGROUND TANK IN WHICH HAZARDOUS MATERIALS INVENTORY IS BEING AMENDED. USE BOX BELOW TO SPECIFY THE LOCATION OF THE HAZARDOUS MATERIALS LISTED ON THIS FORM.

LOCATION OF HAZARDOUS MATERIALS: COMPLETE ALL ITEMS IN THIS BOX.

BUSINESS NAME Allied-Signal Electrodynamics Division ADDRESS 11600 Sherman Way, N. Hollywood, CA 91605

ROOM NAME OR NUMBER S7 BUILDING NAME, OUTDOOR AREA, OR UNDERGROUND TANK NUMBERS. Cutting Oil and Coolant Storage Area

2. COMPLETE ITEMS 1-10 FOR EACH HAZARDOUS MATERIAL TO BE AMENDED THAT IS STORED OR HANDLED AT THE LOCATION SPECIFIED ABOVE. INCLUDE RAW MATERIALS, FINISHED CHEMICAL PRODUCTS, CHEMICALS MANUFACTURED OR REPACKAGED, AND CHEMICALS DISTRIBUTED.
3. MAKE SURE YOU INDICATE WHETHER THE INFORMATION SHOULD BE ADDED, CHANGED OR DELETED FROM THE CURRENT DISCLOSURE THAT THE FIRE DEPARTMENT HAS ON FILE BY MARKING THE APPROPRIATE CODE UNDER ITEM #1.
4. THE CODES IN ITEM 4, 5 and 7 CAN BE FOUND ON THE ATTACHED TABLE OF CODES.

ADDITIONAL INSTRUCTIONS: ITEM 1: CHECK APPROPRIATE CODE: "A" INDICATES A PRODUCT THAT IS BEING ADDED TO YOUR EXISTING INVENTORY, "C" INDICATES A CHANGE IN THE INFORMATION THAT WAS REPORTED FOR THAT PRODUCT, "D" INDICATES A PRODUCT THAT HAS BEEN DELETED. ENTER THE CHEMICAL OR PRODUCT NAME. ITEM 2: ESTIMATE MAXIMUM QUANTITY HANDLED OR STORED AT ANY ONE TIME AT THE ABOVE LOCATION; INCLUDE UNITS (POUNDS, GALLONS, CUBIC FEET). ITEM 3: ESTIMATE ANNUAL AMOUNT HANDLED OR STORED AT THE ABOVE LOCATION; INCLUDE UNITS (POUNDS, GALLONS, CUBIC FEET). ITEM 4: LIST ALL THE TYPES OF CONTAINERS USED TO STORE THE PRODUCT (USE TABLE 1). ITEM 5: CHECK PHYSICAL HAZARDS (USE TABLE 2). ITEM 6: CHECK THE APPROPRIATE PHYSICAL STATE, ("S" FOR SOLID; "L" FOR LIQUID; "G" FOR GAS). ITEM 7: ENTER THE ONE HAZARD CLASS THAT APPLIES TO THE PRODUCT (USE TABLE 3). ITEM 8: CHECK THIS BOX IF PRODUCT OR ANY INGREDIENT IS EXTREMELY HAZARDOUS (SEE ATTACHED LIST OF EXTREMELY HAZARDOUS SUBSTANCES). ITEM 9: ENTER INGREDIENTS AND PERCENT OF CONCENTRATION. ITEM 10: ENTER THE CAS (CHEMICAL ABSTRACT SERVICE) NUMBERS FOR EACH HAZARDOUS INGREDIENT (USE YOUR MSDS).

A ___ C ___ D ___ (1) CHEMICAL OR PRODUCT NAME: OIL, MOBIL VACTRA #3

(2) MAXIMUM QUANTITY ANY TIME	(3) TOTAL YEARLY QUANTITY	(4) STORAGE TYPES	(5) HEALTH & PHYSICAL HAZARDS	(6) PHYS. STATE	(7) HAZARD CLASS	(8) EXTREMELY HAZARDOUS
110 gal.	110 gal.	B	1 X, 2, 3, 4, 5	S, L X, G	1B	

(9) HAZARDOUS CHEMICAL INGREDIENTS & PERCENTAGE OF EACH		(10) CAS NUMBERS OF EACH INGREDIENT
	%	
No hazardous constituents	%	
Refined mineral oils	> 95 %	
Additives	< 5 %	
	%	
	%	

A ___ C ___ D ___ (1) CHEMICAL OR PRODUCT NAME: OIL, MOBIL VACTRA #4

(2) MAXIMUM QUANTITY ANY TIME	(3) TOTAL YEARLY QUANTITY	(4) STORAGE TYPES	(5) HEALTH & PHYSICAL HAZARDS	(6) PHYS. STATE	(7) HAZARD CLASS	(8) EXTREMELY HAZARDOUS
55 gal.	55 gal.	B	1 X, 2, 3 X, 4, 5	S, L X, G	1B	

(9) HAZARDOUS CHEMICAL INGREDIENTS & PERCENTAGE OF EACH		(10) CAS NUMBERS OF EACH INGREDIENT
	%	
Refined mineral oil	90 %	
Sulfurized fats	7 %	
Polyrsobutylene	< 1 %	
Additives	< 1 %	
	%	

FOR OFFICE USE ONLY: INSP. ID ____ INSP. INT. ____ DATE ____ DATA ENTRY ID ____ DATA ENTRY INIT ____ DATE ____

PART B AMENDMENT FOR HAZARDOUS MATERIALS INVENTORY

LAFD # 026645-011-6 PAGE ___ OF ___

LOCATION OF HAZARDOUS MATERIALS: COMPLETE ALL ITEMS IN THIS BOX

BUSINESS NAME Allied-Signal Electrodynamics Division ADDRESS 11600 Sherman Way, N. Hollywood, CA 91605

ROOM NAME OR NUMBER S7 BUILDING NAME, OUTDOOR AREA, OR UNDERGROUND TANK NUMBERS Cutting Oil and Coolant Storage Area

(1) A ___ C ___ D ___ CHEMICAL OR PRODUCT NAME	(2) MAXIMUM QUANTITY ANY TIME	(3) TOTAL YEARLY QUANTITY	(4) STORAGE TYPES	(5) HEALTH & PHYSICAL HAZARDS	(6) PHYS. STATE	(7) HAZARD CLASS	(8) EXTREMELY HAZARDOUS	(9) HAZARDOUS CHEMICAL INGREDIENTS & PERCENTAGE OF EACH	(10) CAS NUMBERS OF EACH INGREDIENT
RMC #2190 Turbine Oil MIL-L-17331	750 gal.	2500 gal.	B	N/A 1 ___ 2 ___ 3 ___ 4 ___ 5 ___	S ___ L X G ___	1B	___	No hazardous constituents	

(1) A ___ C ___ D ___ CHEMICAL OR PRODUCT NAME	(2) MAXIMUM QUANTITY ANY TIME	(3) TOTAL YEARLY QUANTITY	(4) STORAGE TYPES	(5) HEALTH & PHYSICAL HAZARDS	(6) PHYS. STATE	(7) HAZARD CLASS	(8) EXTREMELY HAZARDOUS	(9) HAZARDOUS CHEMICAL INGREDIENTS & PERCENTAGE OF EACH	(10) CAS NUMBERS OF EACH INGREDIENT
Oil, Mobil Vactra #2	165 gal.	385 gal.	B	1 X 2 ___ 3 X 4 ___ 5 ___	S ___ L X G ___	1B	___	Refined mineral oil 90 %	
								Sulfurized fats > 7 %	
								Polyisobutylene > 1 %	
								additives > 1 %	

(1) A ___ C ___ D ___ CHEMICAL OR PRODUCT NAME	(2) MAXIMUM QUANTITY ANY TIME	(3) TOTAL YEARLY QUANTITY	(4) STORAGE TYPES	(5) HEALTH & PHYSICAL HAZARDS	(6) PHYS. STATE	(7) HAZARD CLASS	(8) EXTREMELY HAZARDOUS	(9) HAZARDOUS CHEMICAL INGREDIENTS & PERCENTAGE OF EACH	(10) CAS NUMBERS OF EACH INGREDIENT
Mobil Supra 10W-30	165 gal.	165 gal.	B	1 X 2 ___ 3 ___ 4 ___ 5 ___	S ___ L X G ___	1B	___	No hazardous constituents	
								Refined mineral oils > 85 %	
								additives < 15 %	

FOR OFFICE USE ONLY: INSP. ID ___ INSP. INT. ___ DATE ___ DATA ENTRY ID ___ DATA ENTRY INIT ___ DATE ___

PART B AMENDMENT FOR HAZARDOUS MATERIALS INVENTORY

LAFD # 020645-001-0 PAGE ____ OF ____

INSTRUCTIONS: READ ALL THE INSTRUCTIONS BELOW AND PHOTOCOPY EXTRA COPIES OF THIS FORM BEFORE COMPLETING IT. (REPORT HAZARDOUS WASTE ON PART C)

1. COMPLETE A SEPARATE FORM FOR EACH BUILDING, OUTDOOR AREA, ROOM OR UNDERGROUND TANK IN WHICH HAZARDOUS MATERIALS INVENTORY IS BEING AMENDED. USE BOX BELOW TO SPECIFY THE LOCATION OF THE HAZARDOUS MATERIALS LISTED ON THIS FORM.

LOCATION OF HAZARDOUS MATERIALS: COMPLETE ALL ITEMS IN THIS BOX.

BUSINESS NAME Allied-Signal Electrodynamics Division ADDRESS 11600 Sherman Way, N. Hollywood, CA 91605

ROOM NAME OR NUMBER S7 BUILDING NAME, OUTDOOR AREA, OR UNDERGROUND TANK NUMBERS. ____

2. COMPLETE ITEMS 1-10 FOR EACH HAZARDOUS MATERIAL TO BE AMENDED THAT IS STORED OR HANDLED AT THE LOCATION SPECIFIED ABOVE. INCLUDE RAW MATERIALS, FINISHED CHEMICAL PRODUCTS, CHEMICALS MANUFACTURED OR REPACKAGED, AND CHEMICALS DISTRIBUTED.
3. MAKE SURE YOU INDICATE WHETHER THE INFORMATION SHOULD BE ADDED, CHANGED OR DELETED FROM THE CURRENT DISCLOSURE THAT THE FIRE DEPARTMENT HAS ON FILE BY MARKING THE APPROPRIATE CODE UNDER ITEM #1.
4. THE CODES IN ITEM 4, 5 and 7 CAN BE FOUND ON THE ATTACHED TABLE OF CODES.

ADDITIONAL INSTRUCTIONS: ITEM 1: CHECK APPROPRIATE CODE: "A" INDICATES A PRODUCT THAT IS BEING ADDED TO YOUR EXISTING INVENTORY, "C" INDICATES A CHANGE IN THE INFORMATION THAT WAS REPORTED FOR THAT PRODUCT, "D" INDICATES A PRODUCT THAT HAS BEEN DELETED. ENTER THE CHEMICAL OR PRODUCT NAME. ITEM 2: ESTIMATE MAXIMUM QUANTITY HANDLED OR STORED AT ANY ONE TIME AT THE ABOVE LOCATION; INCLUDE UNITS (POUNDS, GALLONS, CUBIC FEET). ITEM 3: ESTIMATE ANNUAL AMOUNT HANDLED OR STORED AT THE ABOVE LOCATION; INCLUDE UNITS (POUNDS, GALLONS, CUBIC FEET). ITEM 4: LIST ALL THE TYPES OF CONTAINERS USED TO STORE THE PRODUCT (USE TABLE 1). ITEM 5: CHECK PHYSICAL HAZARDS (USE TABLE 2). ITEM 6: CHECK THE APPROPRIATE PHYSICAL STATE, ("S" FOR SOLID; "L" FOR LIQUID; "G" FOR GAS). ITEM 7: ENTER THE ONE HAZARD CLASS THAT APPLIES TO THE PRODUCT (USE TABLE 3). ITEM 8: CHECK THIS BOX IF PRODUCT OR ANY INGREDIENT IS EXTREMELY HAZARDOUS (SEE ATTACHED LIST OF EXTREMELY HAZARDOUS SUBSTANCES). ITEM 9: ENTER INGREDIENTS AND PERCENT OF CONCENTRATION. ITEM 10: ENTER THE CAS (CHEMICAL ABSTRACT SERVICE) NUMBERS FOR EACH HAZARDOUS INGREDIENT (USE YOUR MSDS).

A ___ C ___ D ___ (1) CHEMICAL OR PRODUCT NAME: M&M Honing Oil

(2) MAXIMUM QUANTITY ANY TIME	(3) TOTAL YEARLY QUANTITY	(4) STORAGE TYPES	(5) HEALTH & PHYSICAL HAZARDS	(6) PHYS. STATE	(7) HAZARD CLASS	(8) EXTREMELY HAZARDOUS
270 gal.	110 gal.	B	1 X, 2, 3 X, 4, 5	S, L X, G	1B	

(9) HAZARDOUS CHEMICAL INGREDIENTS & PERCENTAGE OF EACH		(10) CAS NUMBERS OF EACH INGREDIENT
	%	
Deodorized Kerosene	30-60%	8008-20-6
Turpentine	10-30%	8006-64-2
Mineral Oil	10-30%	64741-96-4
	%	
	%	

A ___ C ___ D ___ (1) CHEMICAL OR PRODUCT NAME: HYDRAULIC OIL DTE 24

(2) MAXIMUM QUANTITY ANY TIME	(3) TOTAL YEARLY QUANTITY	(4) STORAGE TYPES	(5) HEALTH & PHYSICAL HAZARDS	(6) PHYS. STATE	(7) HAZARD CLASS	(8) EXTREMELY HAZARDOUS
220 gal.	385 gal.	B	N/A 1, 2, 3, 4, 5	S, L X, G	1B	

(9) HAZARDOUS CHEMICAL INGREDIENTS & PERCENTAGE OF EACH		(10) CAS NUMBERS OF EACH INGREDIENT
	%	
No hazardous constituents	%	
Refined Mineral Oils	> 95%	
Additives	< 5%	
	%	
	%	

FOR OFFICE USE ONLY: INSP. ID ____ INSP. INT. ____ DATE ____ DATA ENTRY ID ____ DATA ENTRY INIT ____ DATE ____

PART B AMENDMENT FOR HAZARDOUS MATERIALS INVENTORY

LAFD # 026645-001-6 PAGE ___ OF ___

LOCATION OF HAZARDOUS MATERIALS: COMPLETE ALL ITEMS IN THIS BOX

BUSINESS NAME Allied-Signal Electrodynamics Division

ADDRESS 11600 Sherman Way, N. Hollywood, CA 91605

ROOM NAME OR NUMBER S7

BUILDING NAME, OUTDOOR AREA, OR UNDERGROUND TANK NUMBERS Cutting Oil and Coolant Storage Area

A ___ C ___ D ___

(1) CHEMICAL OR PRODUCT NAME: Copeco #9058 (Cutting Fluid)

(2) MAXIMUM QUANTITY ANY TIME	(3) TOTAL YEARLY QUANTITY	(4) STORAGE TYPES	(5) HEALTH & PHYSICAL HAZARDS	(6) PHYS. STATE	(7) HAZARD CLASS	(8) EXTREMELY HAZARDOUS
110 gal.	165 gal.	B	1 X, 2, 3, 4, 5	S, L X, G	1B	

(9) HAZARDOUS CHEMICAL INGREDIENTS & PERCENTAGE OF EACH		(10) CAS NUMBERS OF EACH INGREDIENT
Trade secret formulation	%	
Refined solvent	%	
Petroleum mixture	%	
Petroleum oil with extreme	%	
pressure additive	%	
	%	

A ___ C ___ D ___

(1) CHEMICAL OR PRODUCT NAME: Micronic Hydraulic Fluid MIL-H-46170B, Type I

(2) MAXIMUM QUANTITY ANY TIME	(3) TOTAL YEARLY QUANTITY	(4) STORAGE TYPES	(5) HEALTH & PHYSICAL HAZARDS	(6) PHYS. STATE	(7) HAZARD CLASS	(8) EXTREMELY HAZARDOUS
600 gal.	600 gal.	~~B~~	1 X, 2, 3, 4, 5	S, L X, G	1B	

(9) HAZARDOUS CHEMICAL INGREDIENTS & PERCENTAGE OF EACH		(10) CAS NUMBERS OF EACH INGREDIENT
Synthetic hydrocarbon base	70 %	
Lubricant ester	25 %	
	%	
	%	
	%	
	%	

A ___ C ___ D ___

(1) CHEMICAL OR PRODUCT NAME: Anti-Rust Seal NC-C03

(2) MAXIMUM QUANTITY ANY TIME	(3) TOTAL YEARLY QUANTITY	(4) STORAGE TYPES	(5) HEALTH & PHYSICAL HAZARDS	(6) PHYS. STATE	(7) HAZARD CLASS	(8) EXTREMELY HAZARDOUS
110 gal.	110 gal.	~~B~~	1 X, 2, 3, 4, 5	S, L X, G	1D	

(9) HAZARDOUS CHEMICAL INGREDIENTS & PERCENTAGE OF EACH		(10) CAS NUMBERS OF EACH INGREDIENT
Sodium nitrate	20 %	7632-00-0
	%	
	%	
	%	
	%	
	%	

FOR OFFICE USE ONLY: INSP. ID ___ INSP. INT. ___ DATE ___ DATA ENTRY ID ___ DATA ENTRY INIT ___ DATE ___

PART B AMENDMENT FOR HAZARDOUS MATERIALS INVENTORY

LAFD # _____ PAGE ____ OF ____

INSTRUCTIONS: READ ALL THE INSTRUCTIONS BELOW AND PHOTOCOPY EXTRA COPIES OF THIS FORM BEFORE COMPLETING IT. (REPORT HAZARDOUS WASTE ON PART C)

1. COMPLETE A SEPARATE FORM FOR EACH BUILDING, OUTDOOR AREA, ROOM OR UNDERGROUND TANK IN WHICH HAZARDOUS MATERIALS INVENTORY IS BEING AMENDED. USE BOX BELOW TO SPECIFY THE LOCATION OF THE HAZARDOUS MATERIALS LISTED ON THIS FORM.

LOCATION OF HAZARDOUS MATERIALS: COMPLETE ALL ITEMS IN THIS BOX.

BUSINESS NAME Allied-Signal Electrodynamics Division ADDRESS 11600 Sherman Way, N. Hollywood, CA 91605

ROOM NAME OR NUMBER S7 BUILDING NAME, OUTDOOR AREA, OR UNDERGROUND TANK NUMBERS. Cutting Oil and Coolant Storage Area

2. COMPLETE ITEMS 1-10 FOR EACH HAZARDOUS MATERIAL TO BE AMENDED THAT IS STORED OR HANDLED AT THE LOCATION SPECIFIED ABOVE. INCLUDE RAW MATERIALS, FINISHED CHEMICAL PRODUCTS, CHEMICALS MANUFACTURED OR REPACKAGED, AND CHEMICALS DISTRIBUTED.
3. MAKE SURE YOU INDICATE WHETHER THE INFORMATION SHOULD BE ADDED, CHANGED OR DELETED FROM THE CURRENT DISCLOSURE THAT THE FIRE DEPARTMENT HAS ON FILE BY MARKING THE APPROPRIATE CODE UNDER ITEM #1.
4. THE CODES IN ITEM 4, 5 and 7 CAN BE FOUND ON THE ATTACHED TABLE OF CODES.

ADDITIONAL INSTRUCTIONS: ITEM 1: CHECK APPROPRIATE CODE: "A" INDICATES A PRODUCT THAT IS BEING ADDED TO YOUR EXISTING INVENTORY, "C" INDICATES A CHANGE IN THE INFORMATION THAT WAS REPORTED FOR THAT PRODUCT, "D" INDICATES A PRODUCT THAT HAS BEEN DELETED. ENTER THE CHEMICAL OR PRODUCT NAME. ITEM 2: ESTIMATE MAXIMUM QUANTITY HANDLED OR STORED AT ANY ONE TIME AT THE ABOVE LOCATION; INCLUDE UNITS (POUNDS, GALLONS, CUBIC FEET). ITEM 3: ESTIMATE ANNUAL AMOUNT HANDLED OR STORED AT THE ABOVE LOCATION; INCLUDE UNITS (POUNDS, GALLONS, CUBIC FEET). ITEM 4: LIST ALL THE TYPES OF CONTAINERS USED TO STORE THE PRODUCT (USE TABLE 1). ITEM 5: CHECK PHYSICAL HAZARD (USE TABLE 2). ITEM 6: CHECK THE APPROPRIATE PHYSICAL STATE, ("S" FOR SOLID; "L" FOR LIQUID; "G" FOR GAS). ITEM 7: ENTER THE ONE HAZARD CLASS THAT APPLIES TO THE PRODUCT (USE TABLE 3). ITEM 8: CHECK THIS BOX IF PRODUCT OR ANY INGREDIENT IS EXTREMELY HAZARDOUS (SEE ATTACHED LIST OF EXTREMELY HAZARDOUS SUBSTANCES). ITEM 9: ENTER INGREDIENTS AND PERCENT OF CONCENTRATION. ITEM 10: ENTER THE CAS (CHEMICAL ABSTRACT SERVICE) NUMBERS FOR EACH HAZARDOUS INGREDIENT (USE YOUR MSDS).

A ___ C ___ D ___ (1) CHEMICAL OR PRODUCT NAME: PETROCHEM 108 (SOLUBLE OIL)

(2) MAXIMUM QUANTITY ANY TIME	(3) TOTAL YEARLY QUANTITY	(4) STORAGE TYPES	(5) HEALTH & PHYSICAL HAZARDS	(6) PHYS. STATE	(7) HAZARD CLASS	(8) EXTREMELY HAZARDOUS
55 gal.	220 gal.	B	1 X, 2, 3, 4, 5	S, L X, G	1B	

(9) HAZARDOUS CHEMICAL INGREDIENTS & PERCENTAGE OF EACH		(10) CAS NUMBERS OF EACH INGREDIENT
	%	
Pale Oil	24 %	
Petroleum Distillates	48 %	
	%	
	%	
	%	

A ___ C ___ D ___ (1) CHEMICAL OR PRODUCT NAME: STOKES V LUBE

(2) MAXIMUM QUANTITY ANY TIME	(3) TOTAL YEARLY QUANTITY	(4) STORAGE TYPES	(5) HEALTH & PHYSICAL HAZARDS	(6) PHYS. STATE	(7) HAZARD CLASS	(8) EXTREMELY HAZARDOUS
165 gal.	165 gal.	B	N/A 1, 2, 3, 4, 5	S, L X, G	1B	

(9) HAZARDOUS CHEMICAL INGREDIENTS & PERCENTAGE OF EACH		(10) CAS NUMBERS OF EACH INGREDIENT
	%	
Solvent Refine Heavy Distillate	%	
Methacrylate Copolymer	%	64741-88-4
Trace Silicone Polymer	%	
Solvent Refined Residuum	%	64742-01-4
	%	

FOR OFFICE USE ONLY: INSP. ID _____ INSP. INT. _____ DATE _____ DATA ENTRY ID _____ DATA ENTRY INIT _____ DATE _____

PART B AMENDMENT FOR HAZARDOUS MATERIALS INVENTORY

LAFD # 026045-011-6 PAGE ____ OF ____

LOCATION OF HAZARDOUS MATERIALS: COMPLETE ALL ITEMS IN THIS BOX

BUSINESS NAME Allied-Signal Electrodynamics Division ADDRESS 11600 Sherman Way, N. Hollywood, CA 91605

ROOM NAME OR NUMBER S7 BUILDING NAME, OUTDOOR AREA, OR UNDERGROUND TANK NUMBERS Cutting Oil and Coolant Storage Area

(1) A ___ C ___ D ___ CHEMICAL OR PRODUCT NAME	(2) MAXIMUM QUANTITY ANY TIME	(3) TOTAL YEARLY QUANTITY	(4) STORAGE TYPES	(5) HEALTH & PHYSICAL HAZARDS	(6) PHYS. STATE	(7) HAZARD CLASS	(8) EXTREMELY HAZARDOUS	(9) HAZARDOUS CHEMICAL INGREDIENTS & PERCENTAGE OF EACH	(10) CAS NUMBERS OF EACH INGREDIENT
Texaco EDM Cutting Fluid	220 gal.	880 gal.	P	1 X, 2, 3, 4, 5	S, L X, G	1B		No hazardous constituents %	

(1) A ___ C ___ D ___ CHEMICAL OR PRODUCT NAME	(2) MAXIMUM QUANTITY ANY TIME	(3) TOTAL YEARLY QUANTITY	(4) STORAGE TYPES	(5) HEALTH & PHYSICAL HAZARDS	(6) PHYS. STATE	(7) HAZARD CLASS	(8) EXTREMELY HAZARDOUS	(9) HAZARDOUS CHEMICAL INGREDIENTS & PERCENTAGE OF EACH	(10) CAS NUMBERS OF EACH INGREDIENT
Calgon P3576	275 gal.	1200 gal.	B	1 X, 2 X, 3 X, 4, 5	S, L X, G	1D		1,1,1 Trichloroethane 100 %	71-55-6

(1) A ___ C ___ D ___ CHEMICAL OR PRODUCT NAME	(2) MAXIMUM QUANTITY ANY TIME	(3) TOTAL YEARLY QUANTITY	(4) STORAGE TYPES	(5) HEALTH & PHYSICAL HAZARDS	(6) PHYS. STATE	(7) HAZARD CLASS	(8) EXTREMELY HAZARDOUS	(9) HAZARDOUS CHEMICAL INGREDIENTS & PERCENTAGE OF EACH	(10) CAS NUMBERS OF EACH INGREDIENT
Houghton Quench K (oil)	55 gal.	55 gal.	P	1 X, 2, 3, 4, 5	S, L X, G	1B		Mineral Oil > 60 %	64741-89-5
								%	64741-44-2
								%	64742-54-7

FOR OFFICE USE ONLY: INSP. ID ____ INSP. INT. ____ DATE ____ DATA ENTRY ID ____ DATA ENTRY INIT ____ DATE ____

PART B AMENDMENT FOR HAZARDOUS MATERIALS INVENTORY

LAFD # 026645-001-6 PAGE ____ OF ____

INSTRUCTIONS: READ ALL THE INSTRUCTIONS BELOW AND PHOTOCOPY EXTRA COPIES OF THIS FORM BEFORE COMPLETING IT. (REPORT HAZARDOUS WASTE ON PART C)

1. COMPLETE A SEPARATE FORM FOR EACH BUILDING, OUTDOOR AREA, ROOM OR UNDERGROUND TANK IN WHICH HAZARDOUS MATERIALS INVENTORY IS BEING AMENDED. USE BOX BELOW TO SPECIFY THE LOCATION OF THE HAZARDOUS MATERIALS LISTED ON THIS FORM.

LOCATION OF HAZARDOUS MATERIALS: COMPLETE ALL ITEMS IN THIS BOX.

BUSINESS NAME: Allied-Signal Electrodynamics Division

ADDRESS: 11600 Sherman Way, N. Hollywood, CA 91605

ROOM NAME OR NUMBER: S7

BUILDING NAME, OUTDOOR AREA, OR UNDERGROUND TANK NUMBERS: Cutting Oil and Coolant Storage Area

2. COMPLETE ITEMS 1-10 FOR EACH HAZARDOUS MATERIAL TO BE AMENDED THAT IS STORED OR HANDLED AT THE LOCATION SPECIFIED ABOVE. INCLUDE RAW MATERIALS, FINISHED CHEMICAL PRODUCTS, CHEMICALS MANUFACTURED OR REPACKAGED, AND CHEMICALS DISTRIBUTED.
3. MAKE SURE YOU INDICATE WHETHER THE INFORMATION SHOULD BE ADDED, CHANGED OR DELETED FROM THE CURRENT DISCLOSURE THAT THE FIRE DEPARTMENT HAS ON FILE BY MARKING THE APPROPRIATE CODE UNDER ITEM #1.
4. THE CODES IN ITEM 4, 5 and 7 CAN BE FOUND ON THE ATTACHED TABLE OF CODES.

ADDITIONAL INSTRUCTIONS: ITEM 1: CHECK APPROPRIATE CODE: "A" INDICATES A PRODUCT THAT IS BEING ADDED TO YOUR EXISTING INVENTORY, "C" INDICATES A CHANGE IN THE INFORMATION THAT WAS REPORTED FOR THAT PRODUCT, "D" INDICATES A PRODUCT THAT HAS BEEN DELETED. ENTER THE CHEMICAL OR PRODUCT NAME. ITEM 2: ESTIMATE MAXIMUM QUANTITY HANDLED OR STORED AT ANY ONE TIME AT THE ABOVE LOCATION; INCLUDE UNITS (POUNDS, GALLONS, CUBIC FEET). ITEM 3: ESTIMATE ANNUAL AMOUNT HANDLED OR STORED AT THE ABOVE LOCATION; INCLUDE UNITS (POUNDS, GALLONS, CUBIC FEET). ITEM 4: LIST ALL THE TYPES OF CONTAINERS USED TO STORE THE PRODUCT (USE TABLE 1). ITEM 5: CHECK PHYSICAL HAZARDS (USE TABLE 2). ITEM 6: CHECK THE APPROPRIATE PHYSICAL STATE, ("S" FOR SOLID; "L" FOR LIQUID; "G" FOR GAS). ITEM 7: ENTER THE ONE HAZARD CLASS THAT APPLIES TO THE PRODUCT (USE TABLE 3). ITEM 8: CHECK THIS BOX IF PRODUCT OR ANY INGREDIENT IS EXTREMELY HAZARDOUS (SEE ATTACHED LIST OF EXTREMELY HAZARDOUS SUBSTANCES). ITEM 9: ENTER INGREDIENTS AND PERCENT OF CONCENTRATION. ITEM 10: ENTER THE CAS (CHEMICAL ABSTRACT SERVICE) NUMBERS FOR EACH HAZARDOUS INGREDIENT (USE YOUR MSDS).

(1) CHEMICAL OR PRODUCT NAME	(2) MAXIMUM QUANTITY ANY TIME	(3) TOTAL YEARLY QUANTITY	(4) STORAGE TYPES	(5) HEALTH & PHYSICAL HAZARDS	(6) PHYS. STATE	(7) HAZARD CLASS	(8) EXTREMELY HAZARDOUS	(9) HAZARDOUS CHEMICAL INGREDIENTS & PERCENTAGE OF EACH		(10) CAS NUMBERS OF EACH INGREDIENT
Fremont 204 (Defoamer)	110 gal.	110 gal.	B	1 X 2 X 3 4 5	S L X G	1B		Petroleum Distillates(NAPTHA)	90 %	8008-20-6

(1) CHEMICAL OR PRODUCT NAME	(2) MAXIMUM QUANTITY ANY TIME	(3) TOTAL YEARLY QUANTITY	(4) STORAGE TYPES	(5) HEALTH & PHYSICAL HAZARDS	(6) PHYS. STATE	(7) HAZARD CLASS	(8) EXTREMELY HAZARDOUS	(9) HAZARDOUS CHEMICAL INGREDIENTS & PERCENTAGE OF EACH		(10) CAS NUMBERS OF EACH INGREDIENT
Fremont 3045 (Cleaner)	330 gal.	330 gal.	B	1 X 2 3 4 5	S L X G	1D		2-Butoxyethanol	2.5 %	111-76-2
								Sodium Silicate	4.1 %	1344-09 -8

FOR OFFICE USE ONLY: INSP. ID INSP. INIT. DATE DATA ENTRY ID DATA ENTRY INIT. DATE

PART B AMENDMENT FOR HAZARDOUS MATERIALS INVENTORY

LAFD # 026645-001 -6 PAGE ___ OF ___

LOCATION OF HAZARDOUS MATERIALS: COMPLETE ALL ITEMS IN THIS BOX

BUSINESS NAME Allied-Signal Electrodynamics Division ADDRESS 11600 Sherman Way, N. Hollywood, CA 91605

ROOM NAME OR NUMBER S8 BUILDING NAME, OUTDOOR AREA, OR UNDERGROUND TANK NUMBERS Flammable Storage Area

A ___ C ___ D ___ (1) CHEMICAL OR PRODUCT NAME: Isopropyl Alcohol

(2) MAXIMUM QUANTITY ANY TIME	(3) TOTAL YEARLY QUANTITY	(4) STORAGE TYPES	(5) HEALTH & PHYSICAL HAZARDS	(6) PHYS. STATE	(7) HAZARD CLASS	(8) EXTREMELY HAZARDOUS
110 gal.	165 gal.	B	1 X, 2, 3 X, 4, 5	S, L X, G	1B	

(9) HAZARDOUS CHEMICAL INGREDIENTS & PERCENTAGE OF EACH		(10) CAS NUMBERS OF EACH INGREDIENT
Isopropyl Alcohol	100%	000-067-630

A ___ C ___ D ___ (1) CHEMICAL OR PRODUCT NAME: Acetone

(2) MAXIMUM QUANTITY ANY TIME	(3) TOTAL YEARLY QUANTITY	(4) STORAGE TYPES	(5) HEALTH & PHYSICAL HAZARDS	(6) PHYS. STATE	(7) HAZARD CLASS	(8) EXTREMELY HAZARDOUS
250 gal.	250 gal.	B	1 X, 2, 3 X, 4, 5	S, L X, G	3A	

(9) HAZARDOUS CHEMICAL INGREDIENTS & PERCENTAGE OF EACH		(10) CAS NUMBERS OF EACH INGREDIENT
acetone	100%	000-067-641

A ___ C ___ D ___ (1) CHEMICAL OR PRODUCT NAME: Freon TF

(2) MAXIMUM QUANTITY ANY TIME	(3) TOTAL YEARLY QUANTITY	(4) STORAGE TYPES	(5) HEALTH & PHYSICAL HAZARDS	(6) PHYS. STATE	(7) HAZARD CLASS	(8) EXTREMELY HAZARDOUS
55 gal.	55 gal.	B	1 X, 2, 3 X, 4, 5	S, L X, G		

(9) HAZARDOUS CHEMICAL INGREDIENTS & PERCENTAGE OF EACH		(10) CAS NUMBERS OF EACH INGREDIENT
trichlorotrifluoroethane	100%	0076-13-1

FOR OFFICE USE ONLY: INSP. ID ___ INSP. INT. ___ DATE ___ DATA ENTRY ID ___ DATA ENTRY INIT ___ DATE ___

PART B AMENDMENT FOR HAZARDOUS MATERIALS INVENTORY

CARD # _____ PAGE ____ OF ____

INSTRUCTIONS: READ ALL THE INSTRUCTIONS BELOW AND PHOTOCOPY EXTRA COPIES OF THIS FORM BEFORE COMPLETING IT. (REPORT HAZARDOUS WASTE ON PART C)

1. COMPLETE A SEPARATE FORM FOR EACH BUILDING, OUTDOOR AREA, ROOM OR UNDERGROUND TANK IN WHICH HAZARDOUS MATERIALS INVENTORY IS BEING AMENDED. USE BOX BELOW TO SPECIFY THE LOCATION OF THE HAZARDOUS MATERIALS LISTED ON THIS FORM.

LOCATION OF HAZARDOUS MATERIALS: COMPLETE ALL ITEMS IN THIS BOX.

BUSINESS NAME Allied-Signal Electrodynamics Division ADDRESS ~~11600 Sherman Way, N. Hollywood, CA 91605~~

ROOM NAME OR NUMBER S7 BUILDING NAME, OUTDOOR AREA, OR UNDERGROUND TANK NUMBERS. Cutting Oil and Coolant Storage

2. COMPLETE ITEMS 1-10 FOR EACH HAZARDOUS MATERIAL TO BE AMENDED THAT IS STORED OR HANDLED AT THE LOCATION SPECIFIED ABOVE. INCLUDE RAW MATERIALS, FINISHED CHEMICAL PRODUCTS, CHEMICALS MANUFACTURED OR REPACKAGED, AND CHEMICALS DISTRIBUTED.
3. MAKE SURE YOU INDICATE WHETHER THE INFORMATION SHOULD BE ADDED, CHANGED OR DELETED FROM THE CURRENT DISCLOSURE THAT THE FIRE DEPARTMENT HAS ON FILE BY MARKING THE APPROPRIATE CODE UNDER ITEM #1.
4. THE CODES IN ITEM 4, 5 and 7 CAN BE FOUND ON THE ATTACHED TABLE OF CODES.

ADDITIONAL INSTRUCTIONS: ITEM 1: CHECK APPROPRIATE CODE: "A" INDICATES A PRODUCT THAT IS BEING ADDED TO YOUR EXISTING INVENTORY, "C" INDICATES A CHANGE IN THE INFORMATION THAT WAS REPORTED FOR THAT PRODUCT, "D" INDICATES A PRODUCT THAT HAS BEEN DELETED. ENTER THE CHEMICAL OR PRODUCT NAME. ITEM 2: ESTIMATE MAXIMUM QUANTITY HANDLED OR STORED AT ANY ONE TIME AT THE ABOVE LOCATION; INCLUDE UNITS (POUNDS, GALLONS, CUBIC FEET). ITEM 3: ESTIMATE ANNUAL AMOUNT HANDLED OR STORED AT THE ABOVE LOCATION; INCLUDE UNITS (POUNDS, GALLONS, CUBIC FEET). ITEM 4: LIST ALL THE TYPES OF CONTAINERS USED TO STORE THE PRODUCT (USE TABLE 1). ITEM 5: CHECK PHYSICAL HAZARDS (USE TABLE 2). ITEM 6: CHECK THE APPROPRIATE PHYSICAL STATE, ("S" FOR SOLID; "L" FOR LIQUID; "G" FOR GAS). ITEM 7: ENTER THE ONE HAZARD CLASS THAT APPLIES TO THE PRODUCT (USE TABLE 3). ITEM 8: CHECK THIS BOX IF PRODUCT OR ANY INGREDIENT IS EXTREMELY HAZARDOUS (SEE ATTACHED LIST OF EXTREMELY HAZARDOUS SUBSTANCES). ITEM 9: ENTER INGREDIENTS AND PERCENT OF CONCENTRATION. ITEM 10: ENTER THE CAS (CHEMICAL ABSTRACT SERVICE) NUMBERS FOR EACH HAZARDOUS INGREDIENT (USE YOUR MSDS).

A ___ C ___ D ___ (1) CHEMICAL OR PRODUCT NAME: FREMONT #753 (Low Temperature Cleaner)

(2) MAXIMUM QUANTITY ANY TIME	(3) TOTAL YEARLY QUANTITY	(4) STORAGE TYPES	(5) HEALTH & PHYSICAL HAZARDS	(6) PHYS. STATE	(7) HAZARD CLASS	(8) EXTREMELY HAZARDOUS
165 gal	450 gal	B	1 X, 2, 3, 4, 5	S, L X, G	2A	

(9) HAZARDOUS CHEMICAL INGREDIENTS & PERCENTAGE OF EACH		(10) CAS NUMBERS OF EACH INGREDIENT
	%	
Potassium Hydroxide	%	
(Caustic Potash)	4 %	1310-58-3
	%	
	%	
	%	

A ___ C ___ D ___ (1) CHEMICAL OR PRODUCT NAME: Hydraulic Fluid

(2) MAXIMUM QUANTITY ANY TIME	(3) TOTAL YEARLY QUANTITY	(4) STORAGE TYPES	(5) HEALTH & PHYSICAL HAZARDS	(6) PHYS. STATE	(7) HAZARD CLASS	(8) EXTREMELY HAZARDOUS
385 gal.	385 ga.	B	1 X, 2, 3, 4, 5	S, L X, G	1B	

(9) HAZARDOUS CHEMICAL INGREDIENTS & PERCENTAGE OF EACH		(10) CAS NUMBERS OF EACH INGREDIENT
Solvent Refined Petroleum	%	
Base Stock	85%	64742-46-7
	%	
	%	
	%	
	%	

FOR OFFICE USE ONLY: INSP. ID _____ INSP. INT. _____ DATE _____ DATA ENTRY ID _____ DATA ENTRY INIT _____ DATE _____

PART B AMENDMENT FOR HAZARDOUS MATERIALS INVENTORY

LAFD # 026645-001-6 PAGE ___ OF ___

LOCATION OF HAZARDOUS MATERIALS: COMPLETE ALL ITEMS IN THIS BOX

BUSINESS NAME Allied-Signal Electrodynamics Division

ADDRESS 11600 Sherman Way, N. Hollywood, CA 91605

ROOM NAME OR NUMBER S8

BUILDING NAME, OUTDOOR AREA, OR UNDERGROUND TANK NUMBERS Flammable Storage Area

A ___ C ___ D ___ (1) CHEMICAL OR PRODUCT NAME: Kester-Freon #5120 (Vapor Degreasing Solvent)

(2) MAXIMUM QUANTITY ANY TIME	(3) TOTAL YEARLY QUANTITY	(4) STORAGE TYPES	(5) HEALTH & PHYSICAL HAZARDS	(6) PHYS. STATE	(7) HAZARD CLASS	(8) EXTREMELY HAZARDOUS
165 gal.	165 gal.	B	1 ___ 2 X 3 ___ 4 ___ 5 ___	S ___ L X G ___	1D	___

(9) HAZARDOUS CHEMICAL INGREDIENTS & PERCENTAGE OF EACH		(10) CAS NUMBERS OF EACH INGREDIENT
Isopropyl Alcohol	12 %	67-63-0
Methyl Chloroform	60 %	71-55-6
Trichlorotrifluoroethane	%	
Freon TF	9 %	76-13-1
Trichlomonofluoromethane	16 %	75-69-4
	%	

A ___ C ___ D ___ (1) CHEMICAL OR PRODUCT NAME

(2) MAXIMUM QUANTITY ANY TIME	(3) TOTAL YEARLY QUANTITY	(4) STORAGE TYPES	(5) HEALTH & PHYSICAL HAZARDS	(6) PHYS. STATE	(7) HAZARD CLASS	(8) EXTREMELY HAZARDOUS
		___	1 ___ 2 ___ 3 ___ 4 ___ 5 ___	S ___ L ___ G ___	___	___

(9) HAZARDOUS CHEMICAL INGREDIENTS & PERCENTAGE OF EACH		(10) CAS NUMBERS OF EACH INGREDIENT
	%	
	%	
	%	
	%	
	%	
	%	

___ ___ ___ (1) CHEMICAL OR PRODUCT NAME

(2) MAXIMUM QUANTITY ANY TIME	(3) TOTAL YEARLY QUANTITY	(4) STORAGE TYPES	(5) HEALTH & PHYSICAL HAZARDS	(6) PHYS. STATE	(7) HAZARD CLASS	(8) EXTREMELY HAZARDOUS
		___	1 ___ 2 ___ 3 ___ 4 ___ 5 ___	S ___ L ___ G ___	___	___

(9) HAZARDOUS CHEMICAL INGREDIENTS & PERCENTAGE OF EACH		(10) CAS NUMBERS OF EACH INGREDIENT
	%	
	%	
	%	
	%	
	%	
	%	

FOR OFFICE USE ONLY: INSP. ID ___ INSP. INT. ___ DATE ___ DATA ENTRY ID ___ DATA ENTRY INIT ___ DATE ___

PART B AMENDMENT FOR HAZARDOUS MATERIALS INVENTORY

LAFD # 026045-001-6 PAGE ____ OF ____

INSTRUCTIONS: READ ALL THE INSTRUCTIONS BELOW AND PHOTOCOPY EXTRA COPIES OF THIS FORM BEFORE COMPLETING IT. (REPORT HAZARDOUS WASTE ON PART C)

1. COMPLETE A SEPARATE FORM FOR EACH BUILDING, OUTDOOR AREA, ROOM OR UNDERGROUND TANK IN WHICH HAZARDOUS MATERIALS INVENTORY IS BEING AMENDED. USE BOX BELOW TO SPECIFY THE LOCATION OF THE HAZARDOUS MATERIALS LISTED ON THIS FORM.

LOCATION OF HAZARDOUS MATERIALS: COMPLETE ALL ITEMS IN THIS BOX.

BUSINESS NAME Allied-Signal Electrodynamics Division ADDRESS 11600 Sherman Way, N. Hollywood, CA 91605

ROOM NAME OR NUMBER S8 BUILDING NAME, OUTDOOR AREA, OR UNDERGROUND TANK NUMBERS. Flammable Storage Area

2. COMPLETE ITEMS 1-10 FOR EACH HAZARDOUS MATERIAL TO BE AMENDED THAT IS STORED OR HANDLED AT THE LOCATION SPECIFIED ABOVE. INCLUDE RAW MATERIALS, FINISHED CHEMICAL PRODUCTS, CHEMICALS MANUFACTURED OR REPACKAGED, AND CHEMICALS DISTRIBUTED.
3. MAKE SURE YOU INDICATE WHETHER THE INFORMATION SHOULD BE ADDED, CHANGED OR DELETED FROM THE CURRENT DISCLOSURE THAT THE FIRE DEPARTMENT HAS ON FILE BY MARKING THE APPROPRIATE CODE UNDER ITEM #1.
4. THE CODES IN ITEM 4, 5 and 7 CAN BE FOUND ON THE ATTACHED TABLE OF CODES.

ADDITIONAL INSTRUCTIONS: ITEM 1: CHECK APPROPRIATE CODE: "A" INDICATES A PRODUCT THAT IS BEING ADDED TO YOUR EXISTING INVENTORY, "C" INDICATES A CHANGE IN THE INFORMATION THAT WAS REPORTED FOR THAT PRODUCT, "D" INDICATES A PRODUCT THAT HAS BEEN DELETED. ENTER THE CHEMICAL OR PRODUCT NAME. ITEM 2: ESTIMATE MAXIMUM QUANTITY HANDLED OR STORED AT ANY ONE TIME AT THE ABOVE LOCATION; INCLUDE UNITS (POUNDS, GALLONS, CUBIC FEET). ITEM 3: ESTIMATE ANNUAL AMOUNT HANDLED OR STORED AT THE ABOVE LOCATION; INCLUDE UNITS (POUNDS, GALLONS, CUBIC FEET) ITEM 4: LIST ALL THE TYPES OF CONTAINERS USED TO STORE THE PRODUCT (USE TABLE 1). ITEM 5: CHECK PHYSICAL HAZARDS (USE TABLE 2). ITEM 6: CHECK THE APPROPRIATE PHYSICAL STATE, ("S" FOR SOLID; "L" FOR LIQUID; "G" FOR GAS). ITEM 7: ENTER THE ONE HAZARD CLASS THAT APPLIES TO THE PRODUCT (USE TABLE 3). ITEM 8: CHECK THIS BOX IF PRODUCT OR ANY INGREDIENT IS EXTREMELY HAZARDOUS (SEE ATTACHED LIST OF EXTREMELY HAZARDOUS SUBSTANCES). ITEM 9: ENTER INGREDIENTS AND PERCENT OF CONCENTRATION. ITEM 10: ENTER THE CAS (CHEMICAL ABSTRACT SERVICE) NUMBERS FOR EACH HAZARDOUS INGREDIENT (USE YOUR MSDS).

(1) A ___ C ___ D ___ CHEMICAL OR PRODUCT NAME	(2) MAXIMUM QUANTITY ANY TIME	(3) TOTAL YEARLY QUANTITY	(4) STORAGE TYPES	(5) HEALTH & PHYSICAL HAZARDS	(6) PHYS. STATE	(7) HAZARD CLASS	(8) EXTREMELY HAZARDOUS
METHYL ETHYL KETONE	165 gal.	165 gal.	B	1 X, 2, 3 X, 4, 5	S, L X, G	1B	

(9) HAZARDOUS CHEMICAL INGREDIENTS & PERCENTAGE OF EACH		(10) CAS NUMBERS OF EACH INGREDIENT
	%	
Methyl Ethyl Ketone	100 %	
	%	
	%	
	%	
	%	

(1) A ___ C ___ D ___ CHEMICAL OR PRODUCT NAME	(2) MAXIMUM QUANTITY ANY TIME	(3) TOTAL YEARLY QUANTITY	(4) STORAGE TYPES	(5) HEALTH & PHYSICAL HAZARDS	(6) PHYS. STATE	(7) HAZARD CLASS	(8) EXTREMELY HAZARDOUS
Heptane	550 gal.	1600 gal.	B	1, 2, 3 X, 4, 5	S, L X, G	3A	

(9) HAZARDOUS CHEMICAL INGREDIENTS & PERCENTAGE OF EACH		(10) CAS NUMBERS OF EACH INGREDIENT
Heptane	95 %	142-82-5
	%	
	%	
	%	
	%	
	%	

FOR OFFICE USE ONLY: INSP. ID ____ INSP. INT. ____ DATE ____ DATA ENTRY ID ____ DATA ENTRY INIT ____ DATE ____

PART B AMENDMENT FOR HAZARDOUS MATERIALS INVENTORY LAFD # _____ PAGE ____ OF ____

LOCATION OF HAZARDOUS MATERIALS: COMPLETE ALL ITEMS IN THIS BOX

BUSINESS NAME Allied-Signal Electrodynamics Division ADDRESS 11600 Sherman Way, N. Hollywood, CA 91605

ROOM NAME OR NUMBER S10 BUILDING NAME, OUTDOOR AREA, OR UNDERGROUND TANK NUMBERS Shipping/Receiving

(1) A ___ C ___ D ___ CHEMICAL OR PRODUCT NAME	(2) MAXIMUM QUANTITY ANY TIME	(3) TOTAL YEARLY QUANTITY	(4) STORAGE TYPES	(5) HEALTH & PHYSICAL HAZARDS	(6) PHYS. STATE	(7) HAZARD CLASS	(8) EXTREMELY HAZARDOUS	(9) HAZARDOUS CHEMICAL INGREDIENTS & PERCENTAGE OF EACH	(10) CAS NUMBERS OF EACH INGREDIENT
INSTAPAK 95W COMPONENT B	110 gal.	385 gal.	B	1 X, 2, 3, 4, 5	S, L X, G	NA		Catalyst 2.5%	Proprietary

(1) A ___ C ___ D ___ CHEMICAL OR PRODUCT NAME	(2) MAXIMUM QUANTITY ANY TIME	(3) TOTAL YEARLY QUANTITY	(4) STORAGE TYPES	(5) HEALTH & PHYSICAL HAZARDS	(6) PHYS. STATE	(7) HAZARD CLASS	(8) EXTREMELY HAZARDOUS	(9) HAZARDOUS CHEMICAL INGREDIENTS & PERCENTAGE OF EACH	(10) CAS NUMBERS OF EACH INGREDIENT
				1, 2, 3, 4, 5	S, L, G				

(1) A ___ C ___ D ___ CHEMICAL OR PRODUCT NAME	(2) MAXIMUM QUANTITY ANY TIME	(3) TOTAL YEARLY QUANTITY	(4) STORAGE TYPES	(5) HEALTH & PHYSICAL HAZARDS	(6) PHYS. STATE	(7) HAZARD CLASS	(8) EXTREMELY HAZARDOUS	(9) HAZARDOUS CHEMICAL INGREDIENTS & PERCENTAGE OF EACH	(10) CAS NUMBERS OF EACH INGREDIENT
				1, 2, 3, 4, 5	S, L, G				

FOR OFFICE USE ONLY: INSP. ID _____ INSP. INT. _____ DATE _____ DATA ENTRY ID _____ DATA ENTRY INIT _____ DATE _____

PART B AMENDMENT FOR HAZARDOUS MATERIALS INVENTORY

LAFD # 026645-001-6 PAGE ___ OF ___

INSTRUCTIONS: READ ALL THE INSTRUCTIONS BELOW AND PHOTOCOPY EXTRA COPIES OF THIS FORM BEFORE COMPLETING IT. (REPORT HAZARDOUS WASTE ON PART C)

1. COMPLETE A SEPARATE FORM FOR EACH BUILDING, OUTDOOR AREA, ROOM OR UNDERGROUND TANK IN WHICH HAZARDOUS MATERIALS INVENTORY IS BEING AMENDED. USE BOX BELOW TO SPECIFY THE LOCATION OF THE HAZARDOUS MATERIALS LISTED ON THIS FORM.

LOCATION OF HAZARDOUS MATERIALS: COMPLETE ALL ITEMS IN THIS BOX.

BUSINESS NAME Allied-Signal Electrodynamics Division ADDRESS 11600 Sherman Way, N. Hollywood, CA 91605

ROOM NAME OR NUMBER S8 BUILDING NAME, OUTDOOR AREA, OR UNDERGROUND TANK NUMBERS. Flammable Storage Area

2. COMPLETE ITEMS 1-10 FOR EACH HAZARDOUS MATERIAL TO BE AMENDED THAT IS STORED OR HANDLED AT THE LOCATION SPECIFIED ABOVE. INCLUDE RAW MATERIALS, FINISHED CHEMICAL PRODUCTS, CHEMICALS MANUFACTURED OR REPACKAGED, AND CHEMICALS DISTRIBUTED.
3. MAKE SURE YOU INDICATE WHETHER THE INFORMATION SHOULD BE ADDED, CHANGED OR DELETED FROM THE CURRENT DISCLOSURE THAT THE FIRE DEPARTMENT HAS ON FILE BY MARKING THE APPROPRIATE CODE UNDER ITEM #1.
4. THE CODES IN ITEM 4, 5 and 7 CAN BE FOUND ON THE ATTACHED TABLE OF CODES.

ADDITIONAL INSTRUCTIONS: ITEM 1: CHECK APPROPRIATE CODE: "A" INDICATES A PRODUCT THAT IS BEING ADDED TO YOUR EXISTING INVENTORY, "C" INDICATES A CHANGE IN THE INFORMATION THAT WAS REPORTED FOR THAT PRODUCT, "D" INDICATES A PRODUCT THAT HAS BEEN DELETED. ENTER THE CHEMICAL OR PRODUCT NAME. ITEM 2: ESTIMATE MAXIMUM QUANTITY HANDLED OR STORED AT ANY ONE TIME AT THE ABOVE LOCATION; INCLUDE UNITS (POUNDS, GALLONS, CUBIC FEET). ITEM 3: ESTIMATE ANNUAL AMOUNT HANDLED OR STORED AT THE ABOVE LOCATION; INCLUDE UNITS (POUNDS, GALLONS, CUBIC FEET). ITEM 4: LIST ALL THE TYPES OF CONTAINERS USED TO STORE THE PRODUCT (USE TABLE 1). ITEM 5: CHECK PHYSICAL HAZARDS (USE TABLE 2). ITEM 6: CHECK THE APPROPRIATE PHYSICAL STATE, ("S" FOR SOLID; "L" FOR LIQUID; "G" FOR GAS). ITEM 7: ENTER THE ONE HAZARD CLASS THAT APPLIES TO THE PRODUCT (USE TABLE 3). ITEM 8: CHECK THIS BOX IF PRODUCT OR ANY INGREDIENT IS EXTREMELY HAZARDOUS (SEE ATTACHED LIST OF EXTREMELY HAZARDOUS SUBSTANCES). ITEM 9: ENTER INGREDIENTS AND PERCENT OF CONCENTRATION. ITEM 10: ENTER THE CAS (CHEMICAL ABSTRACT SERVICE) NUMBERS FOR EACH HAZARDOUS INGREDIENT (USE YOUR MSDS).

(1) CHEMICAL OR PRODUCT NAME	(2) MAXIMUM QUANTITY ANY TIME	(3) TOTAL YEARLY QUANTITY	(4) STORAGE TYPES	(5) HEALTH & PHYSICAL HAZARDS	(6) PHYS. STATE	(7) HAZARD CLASS	(8) EXTREMELY HAZARDOUS	(9) HAZARDOUS CHEMICAL INGREDIENTS & PERCENTAGE OF EACH	(10) CAS NUMBERS OF EACH INGREDIENT
Norpar 13	110 gal.	165 gal.	B	1 X, 2, 3 X, 4, 5	S, L X, G	1B		Petrole Solvent 100 %	64771-72-8

(1) CHEMICAL OR PRODUCT NAME	(2) MAXIMUM QUANTITY ANY TIME	(3) TOTAL YEARLY QUANTITY	(4) STORAGE TYPES	(5) HEALTH & PHYSICAL HAZARDS	(6) PHYS. STATE	(7) HAZARD CLASS	(8) EXTREMELY HAZARDOUS	(9) HAZARDOUS CHEMICAL INGREDIENTS & PERCENTAGE OF EACH	(10) CAS NUMBERS OF EACH INGREDIENT
Toluene	165 gal.	440 gal.	B	1 X, 2 X, 3 X, 4, 5	S, L X, G	3A		Toluene 100 %	108-88-3

FOR OFFICE USE ONLY: INSP. ID INSP. INIT DATE DATA ENTRY ID DATA ENTRY INIT DATE

PART C AMENDMENT FOR HAZARDOUS WASTE INVENTORY LAFD # _____ PAGE ____ OF ____

LOCATION OF HAZARDOUS WASTE: COMPLETE ALL ITEMS IN BOX

BUSINESS NAME: _____ ADDRESS: _____

ROOM NAME OR NUMBER: _____ BUILDING NAME, OUTDOOR AREA, OR UNDERGROUND TANK NUMBERS _____

(1) A ___ C ___ D ___ HAZARDOUS WASTE NAME	(2) MAXIMUM QUANTITY ANY TIME	(3) TOTAL YEARLY QUANTITY	(4) STORAGE TYPES	(5) TREAT &. DISPOSAL	(6) WASTE CODE	(7) HAZARD CLASS	(8) EXTREMELY HAZARDOUS	(9) HAZARDOUS CHEMICAL INGREDIENTS & PERCENTAGE OF EACH	(10) CAS NUMBERS OF EACH INGREDIENT
			___	___				___ %	___
			___	___	___	___	___	___ %	___
			___	___				___ %	___
								___ %	___
								___ %	___
								___ %	___

(1) A ___ C ___ D ___ HAZARDOUS WASTE NAME	(2) MAXIMUM QUANTITY ANY TIME	(3) TOTAL YEARLY QUANTITY	(4) STORAGE TYPES	(5) TREAT &. DISPOSAL	(6) WASTE CODE	(7) HAZARD CLASS	(8) EXTREMELY HAZARDOUS	(9) HAZARDOUS CHEMICAL INGREDIENTS & PERCENTAGE OF EACH	(10) CAS NUMBERS OF EACH INGREDIENT
			___	___				___ %	___
			___	___	___	___	___	___ %	___
			___	___				___ %	___
								___ %	___
								___ %	___
								___ %	___

(1) A ___ C ___ D ___ HAZARDOUS WASTE NAME	(2) MAXIMUM QUANTITY ANY TIME	(3) TOTAL YEARLY QUANTITY	(4) STORAGE TYPES	(5) TREAT &. DISPOSAL	(6) WASTE CODE	(7) HAZARD CLASS	(8) EXTREMELY HAZARDOUS	(9) HAZARDOUS CHEMICAL INGREDIENTS & PERCENTAGE OF EACH	(10) CAS NUMBERS OF EACH INGREDIENT
			___	___				___ %	___
			___	___	___	___	___	___ %	___
			___	___				___ %	___
								___ %	___
								___ %	___
								___ %	___

FOR OFFICE USE ONLY: INSP. ID_____ INSP. INIT _____ DATE_____ DATA ENTRY ID_____ DATA ENTRY INIT_____ DATE_____

PART C AMENDMENT FOR HAZARDOUS WASTE INVENTORY

LAFD # 026645-001-6 PAGE ___ OF ___

INSTRUCTIONS: READ ALL THE INSTRUCTIONS BELOW AND PHOTOCOPY EXTRA COPIES OF THIS FORM BEFORE COMPLETING IT.

1. COMPLETE A SEPARATE FORM FOR EACH BUILDING, OUTDOOR AREA, UNDERGROUND TANK OR ROOM WHERE HAZARDOUS WASTES INVENTORY IS BEING AMENDED. USE THE BOX BELOW TO SPECIFY THE LOCATION OF THE HAZARDOUS WASTES LISTED ON THIS FORM.

LOCATION OF HAZARDOUS WASTE: COMPLETE ALL ITEMS IN THIS BOX.

BUSINESS NAME: Allied-Signal Electrodynamics Division ADDRESS: 11600 Sherman Way, N. Hollywood, CA 91605

ROOM NAME OR NUMBER: W1 BUILDING NAME, OUTDOOR AREA, OR UNDERGROUND TANK NUMBERS: Waste Oil (Recyclable) Storage Tank

2. COMPLETE ITEMS 1-10 FOR EACH ADDITION, CHANGE OR DELETION OF HAZARDOUS WASTE GENERATED, STORED OR HANDELED AT THE LOCATION SPECIFIED ABOVE. MAKE SURE YOU INDICATE WHETHER THE INFORMATION SHOULD BE ADDED, CHANGED OR DELETED FROM THE CURRENT DISCLOSURE THAT THE FIRE DEPARTMENT HAS ON FILE BY MARKING THE APPROPRIATE CODE UNDER ITEM #1.
3. USE THE CODES ON THE ATTACHED TABLE TO FILL IN ITEMS 4, 5 AND 7. FOR ITEM 6, USE TABLE III ON THE BACK OF YOUR UNIFORM HAZARDOUS WASTE MANIFEST.
4. RETURN COMPLETED WASTE INVENTORY AMENDMENT TO THE FIRE DEPARTMENT ALONG WITH PART A AND PART B.

ADDITIONAL INSTRUCTIONS: ITEM 1: CHECK APPROPRIATE CODE: "A" INDICATES A WASTE THAT IS BEING ADDED TO YOUR EXISTING INVENTORY, "C" INDICATES A CHANGE IN THE INFORMATION THAT WAS REPORTED FOR THAT WASTE, "D" INDICATES A WASTE THAT HAS BEEN DELETED. ENTER THE HAZARDOUS WASTE NAME. ITEM 2: ENTER THE MAXIMUM QUANTITY HANDELED OR STORED AT ANY ONE TIME AT THE ABOVE LOCATION; INCLUDE UNITS (POUNDS, GALLONS, CUBIC FEET). ITEM 3: ENTER TOTAL YEARLY QUANTITY HANDELED OR STORED AT THE ABOVE LOCATION; INCLUDE UNITS (POUNDS, GALLONS, CUBIC FEET). ITEM 4: LIST ALL TYPES OF CONTAINERS USED TO STORE THE WASTE (USE TABLE 1). ITEM 5: USE ALL TREATMENT AND DISPOSAL METHODS THAT APPLY (USE TABLE 4). ITEM 6: ENTER THE HAZARDOUS WASTE CODE USED ON YOUR HAZARDOUS WASTE MANIFEST (TABLE III ON THE BACK OF THE MANIFEST). ITEM 7: ENTER THE ONE HAZARD CLASS THAT APPLIES TO THE WASTE (USE TABLE 3). ITEM 8: CHECK THIS BOX IF THE WASTE OR ANY INGREDIENT IS EXTREMELY HAZARDOUS (SEE ATTACHED LIST OF EXTREMELY HAZARDOUS SUBSTANCES). ITEM 9: ENTER HAZARDOUS INGREDIENTS AND PERCENTAGE OF CONCENTRATION. ITEM 10: ENTER THE CAS (CHEMICAL ABSTRACT SERVICE) NUMBER FOR EACH HAZARDOUS INGREDIENT (USE YOUR MSDS).

(1) A ___ C ___ D ___ HAZARDOUS WASTE NAME	(2) MAXIMUM QUANTITY ANY TIME	(3) TOTAL YEARLY QUANTITY	(4) STORAGE TYPES	(5) TREAT & DISPOSAL	(6) WASTE CODE	(7) HAZARD CLASS	(8) EXTREMELY HAZARDOUS	(9) HAZARDOUS CHEMICAL INGREDIENTS & PERCENTAGE OF EACH	%	(10) CAS NUMBERS OF EACH INGREDIENT
PETROLEUM OIL N.O.S. COMBUSTIBLE LIQUID UN 1270	1500 gal.	7300 gal.	D	02	221	1B				
								Water Soluble Oil	2	
								Lubricating Oil	20	
								Hydraulic Oil	60	
								Water	20	

(1) A ___ C ___ D ___ HAZARDOUS WASTE NAME	(2) MAXIMUM QUANTITY ANY TIME	(3) TOTAL YEARLY QUANTITY	(4) STORAGE TYPES	(5) TREAT & DISPOSAL	(6) WASTE CODE	(7) HAZARD CLASS	(8) EXTREMELY HAZARDOUS	(9) HAZARDOUS CHEMICAL INGREDIENTS & PERCENTAGE OF EACH	%	(10) CAS NUMBERS OF EACH INGREDIENT

FOR OFFICE USE ONLY: INSP. ID ___ INSP. INIT ___ DATE ___ DATA ENTRY ID ___ DATA ENTRY INIT ___ DATE ___

PART C AMENDMENT FOR HAZARDOUS WASTE INVENTORY

LAFD # 026645-001-6 PAGE ___ OF ___

LOCATION OF HAZARDOUS WASTE: COMPLETE ALL ITEMS IN BOX

BUSINESS NAME: Allied-Signal Electrodynamics Division ADDRESS: 11600 Sherman Way, N. Hollywood, CA 91605

ROOM NAME OR NUMBER: W2 BUILDING NAME, OUTDOOR AREA, OR UNDERGROUND TANK NUMBERS: Hazardous Waste Storage Area

A ___ C ___ D ___

(1) HAZARDOUS WASTE NAME: WASTE KEROSENE COMBUSTIBLE LIQUID UN 1223

(2) MAXIMUM QUANTITY ANY TIME	(3) TOTAL YEARLY QUANTITY	(4) STORAGE TYPES	(5) TREAT & DISPOSAL	(6) WASTE CODE	(7) HAZARD CLASS	(8) EXTREMELY HAZARDOUS
150 gal.	250 gal.	B	02	221	3A	

(9) HAZARDOUS CHEMICAL INGREDIENTS & PERCENTAGE OF EACH		(10) CAS NUMBERS OF EACH INGREDIENT
Petroleum oil & grease	70-100%	
Water, Dirt, Solids	0-30 %	
Napthenes/Paraffins	0-40 %	

A ___ C ___ D ___

(1) HAZARDOUS WASTE NAME: WASTE FLAMMABLE LIQUID N.O.S. FLAMMABLE LIQUID UN 1993 (PAINT & THINNERS) EPA# F003, F005

(2) MAXIMUM QUANTITY ANY TIME	(3) TOTAL YEARLY QUANTITY	(4) STORAGE TYPES	(5) TREAT & DISPOSAL	(6) WASTE CODE	(7) HAZARD CLASS	(8) EXTREMELY HAZARDOUS
110 gal.	360 gal.	B	02	461	3A	

(9) HAZARDOUS CHEMICAL INGREDIENTS & PERCENTAGE OF EACH		(10) CAS NUMBERS OF EACH INGREDIENT
Specified spent non-halogenated	%	
solvents and still bottoms from	%	
recovery	%	

A ___ C ___ D ___

(1) HAZARDOUS WASTE NAME: WASTE FLAMMABLE LIQUID N.O.S. FLAMMABLE LIQUID UN 1993 (RED OIL & HEPTANE) EPA# D001

(2) MAXIMUM QUANTITY ANY TIME	(3) TOTAL YEARLY QUANTITY	(4) STORAGE TYPES	(5) TREAT & DISPOSAL	(6) WASTE CODE	(7) HAZARD CLASS	(8) EXTREMELY HAZARDOUS
100 gal.	305 gal.	B	02	214	3A	

(9) HAZARDOUS CHEMICAL INGREDIENTS & PERCENTAGE OF EACH		(10) CAS NUMBERS OF EACH INGREDIENT
Red hydraulic oil	80-90%	
Heptane	0-25%	142-22-5
Water, Dirt, Solids	0-10%	

FOR OFFICE USE ONLY: INSP. ID ___ INSP. INIT ___ DATE ___ DATA ENTRY ID ___ DATA ENTRY INIT ___ DATE ___

PART C AMENDMENT FOR HAZARDOUS WASTE INVENTORY

LAFD # 026645-001-6 PAGE ___ OF ___

INSTRUCTIONS: READ ALL THE INSTRUCTIONS BELOW AND PHOTOCOPY EXTRA COPIES OF THIS FORM BEFORE COMPLETING IT.

1. COMPLETE A SEPARATE FORM FOR EACH BUILDING, OUTDOOR AREA, UNDERGROUND TANK OR ROOM WHERE HAZARDOUS WASTES INVENTORY IS BEING AMENDED. USE THE BOX BELOW TO SPECIFY THE LOCATION OF THE HAZARDOUS WASTES LISTED ON THIS FORM.

LOCATION OF HAZARDOUS WASTE: COMPLETE ALL ITEMS IN THIS BOX.

BUSINESS NAME: Allied-Signal Electrodynamics Division ADDRESS: 11600 Sherman Way, N. Hollywood, CA 91605

ROOM NAME OR NUMBER: W2 BUILDING NAME, OUTDOOR AREA, OR UNDERGROUND TANK NUMBERS: Hazardous Waste Storage Area

2. COMPLETE ITEMS 1-10 FOR EACH ADDITION, CHANGE OR DELETION OF HAZARDOUS WASTE GENERATED, STORED OR HANDELED AT THE LOCATION SPECIFIED ABOVE. MAKE SURE YOU INDICATE WHETHER THE INFORMATION SHOULD BE ADDED, CHANGED OR DELETED FROM THE CURRENT DISCLOSURE THAT THE FIRE DEPARTMENT HAS ON FILE BY MARKING THE APPROPRIATE CODE UNDER ITEM #1.
3. USE THE CODES ON THE ATTACHED TABLE TO FILL IN ITEMS 4, 5 AND 7. FOR ITEM 6, USE TABLE III ON THE BACK OF YOUR UNIFORM HAZARDOUS WASTE MANIFES
4. RETURN COMPLETED WASTE INVENTORY AMENDMENT TO THE FIRE DEPARTMENT ALONG WITH PART A AND PART B.

ADDITIONAL INSTRUCTIONS: ITEM 1: CHECK APPROPRIATE CODE: "A" INDICATES A WASTE THAT IS BEING ADDED TO YOUR EXISTING INVENTORY, "C" INDICATES A CHANGE IN THE INFORMATION THAT WAS REPORTED FOR THAT WASTE, "D" INDICATES A WASTE THAT HAS BEEN DELETED. ENTER THE HAZARDOUS WASTE NAME. ITEM 2: ENTER THE MAXIMUM QUANTITY HANDELED OR STORED AT ANY ONE TIME AT THE ABOVE LOCATION; INCLUDE UNITS (POUNDS, GALLONS, CUBIC FEET). ITEM 3: ENTER TOTAL YEARLY QUANTITY HANDELED OR STORED AT THE ABOVE LOCATION; INCLUDE UNITS (POUNDS, GALLONS, CUBIC FEET). ITEM 4: LIST ALL TYPES OF CONTAINERS USED TO STORE THE WASTE (USE TABLE 1). ITEM 5: USE ALL TREATMENT AND DISPOSAL METHODS THAT APPLY (USE TABLE 4). ITEM 6: ENTER THE HAZARDOUS WASTE CODE USED ON YOUR HAZARDOUS WASTE MANIFEST (TABLE III ON THE BACK OF THE MANIFEST). ITEM 7: ENTER THE ONE HAZARD CLASS THAT APPLIES TO THE WASTE (USE TABLE 3). ITEM 8: CHECK THIS BOX IF THE WASTE OR ANY INGREDIENT IS EXTREMELY HAZARDOUS (SEE ATTACHED LIST OF EXTREMELY HAZARDOUS SUBSTANCES). ITEM 9: ENTER HAZARDOUS INGREDIENTS AND PERCENTAGE OF CONCENTRATION. ITEM 10: ENTER THE CAS (CHEMICAL ABSTRACT SERVICE) NUMBER FOR EACH HAZARDOUS INGREDIENT (USE YOUR MSDS).

(1) HAZARDOUS WASTE NAME	(2) MAXIMUM QUANTITY ANY TIME	(3) TOTAL YEARLY QUANTITY	(4) STORAGE TYPES	(5) TREAT & DISPOSAL	(6) WASTE CODE	(7) HAZARD CLASS	(8) EXTREMELY HAZARDOUS	(9) HAZARDOUS CHEMICAL INGREDIENTS & PERCENTAGE OF EACH	%	(10) CAS NUMBERS OF EACH INGREDIENT
A ___ C ___ D ___ HAZARDOUS WASTE LIQUID N.O.S. ORM-E NA 9189 (FREON) EPA# F001										
									%	
								Specified spent halogenated	%	
								solvents used degreasing and	%	
	50 gal.	100 gal.	B	02				sludges fr. rec	%	
					221	1D		Trichlorotrifloroethane	10-30 %	76-13-1 & 75-69-4
								Oil, Dirt & Water	10-30 %	
								1,1,1 Trichloroethane	30-70	71-55-6

(1) HAZARDOUS WASTE NAME	(2) MAXIMUM QUANTITY ANY TIME	(3) TOTAL YEARLY QUANTITY	(4) STORAGE TYPES	(5) TREAT & DISPOSAL	(6) WASTE CODE	(7) HAZARD CLASS	(8) EXTREMELY HAZARDOUS	(9) HAZARDOUS CHEMICAL INGREDIENTS & PERCENTAGE OF EACH	%	(10) CAS NUMBERS OF EACH INGREDIENT
A ___ C ___ D ___ WASTE 1,1,1 TRICHLOROETHANE ORM-A UN2831 EPA# F001										
									%	
								Specified spent halogenated	%	
								solvents, used degreasing and	%	
	300 gal.	775 gal.	B	02				sludges from recovery	%	
			D		211	1B		1,1,1 Trichloroethane	%	71-55-6
									%	

FOR OFFICE USE ONLY: INSP. ID ___ INSP. INIT ___ DATE ___ DATA ENTRY ID ___ DATA ENTRY INIT ___ DATE ___

PART C AMENDMENT FOR HAZARDOUS WASTE INVENTORY

LAFD # 026645-001-6 PAGE ___ OF ___

LOCATION OF HAZARDOUS WASTE: COMPLETE ALL ITEMS IN BOX

BUSINESS NAME: Allied-Signal Electrodynamics Division ADDRESS: 11600 Sherman Way, N. Hollywood, CA 91605

ROOM NAME OR NUMBER: W2 BUILDING NAME, OUTDOOR AREA, OR UNDERGROUND TANK NUMBERS: Hazardous Waste Storage Area

A ___ C ___ D ___

(1) HAZARDOUS WASTE NAME: RQ HAZARDOUS WASTE LIQUID, N.O.S. ORM-E (ALODINE) NA 9189 EPA# D001, D007

(2) MAXIMUM QUANTITY ANY TIME	(3) TOTAL YEARLY QUANTITY	(4) STORAGE TYPES	(5) TREAT & DISPOSAL	(6) WASTE CODE	(7) HAZARD CLASS	(8) EXTREMELY HAZARDOUS
150 gal.	150 gal.	B	02			
				135	1D	

(9) HAZARDOUS CHEMICAL INGREDIENTS & PERCENTAGE OF EACH		(10) CAS NUMBERS OF EACH INGREDIENT
	%	
Flouride	< .01%	
Nitrate	< .28%	
Sulfate	< .02%	
Sludge	15-20%	
Water	Balance%	

A ___ C ___ D ___

(1) HAZARDOUS WASTE NAME:

(2) MAXIMUM QUANTITY ANY TIME	(3) TOTAL YEARLY QUANTITY	(4) STORAGE TYPES	(5) TREAT & DISPOSAL	(6) WASTE CODE	(7) HAZARD CLASS	(8) EXTREMELY HAZARDOUS

(9) HAZARDOUS CHEMICAL INGREDIENTS & PERCENTAGE OF EACH		(10) CAS NUMBERS OF EACH INGREDIENT
	%	
	%	
	%	
	%	
	%	
	%	

A ___ C ___ D ___

(1) HAZARDOUS WASTE NAME:

(2) MAXIMUM QUANTITY ANY TIME	(3) TOTAL YEARLY QUANTITY	(4) STORAGE TYPES	(5) TREAT & DISPOSAL	(6) WASTE CODE	(7) HAZARD CLASS	(8) EXTREMELY HAZARDOUS

(9) HAZARDOUS CHEMICAL INGREDIENTS & PERCENTAGE OF EACH		(10) CAS NUMBERS OF EACH INGREDIENT
	%	
	%	
	%	
	%	
	%	
	%	

FOR OFFICE USE ONLY: INSP. ID ___ INSP. INIT ___ DATE ___ DATA ENTRY ID ___ DATA ENTRY INIT ___ DATE ___

PART C AMENDMENT FOR HAZARDOUS WASTE INVENTORY

LAFD # 026645-001-6 ____ OF ____

INSTRUCTIONS: READ ALL THE INSTRUCTIONS BELOW AND PHOTOCOPY EXTRA COPIES OF THIS FORM BEFORE COMPLETING IT.

1. COMPLETE A SEPARATE FORM FOR EACH BUILDING, OUTDOOR AREA, UNDERGROUND TANK OR ROOM WHERE HAZARDOUS WASTES INVENTORY IS BEING AMENDED. USE THE BOX BELOW TO SPECIFY THE LOCATION OF THE HAZARDOUS WASTES LISTED ON THIS FORM.

LOCATION OF HAZARDOUS WASTE: COMPLETE ALL ITEMS IN THIS BOX.

BUSINESS NAME: Allied-Signal Electrodynamics Division ADDRESS: 11600 Sherman Way, N. Hollywood, CA 91605

ROOM NAME OR NUMBER: W2 BUILDING NAME, OUTDOOR AREA, OR UNDERGROUND TANK NUMBERS Hazardous Waste Storage Area

2. COMPLETE ITEMS 1-10 FOR EACH ADDITION, CHANGE OR DELETION OF HAZARDOUS WASTE GENERATED, STORED OR HANDELED AT THE LOCATION SPECIFIED ABOVE. MAKE SURE YOU INDICATE WHETHER THE INFORMATION SHOULD BE ADDED, CHANGED OR DELETED FROM THE CURRENT DISCLOSURE THAT THE FIRE DEPARTMENT HAS ON FILE BY MARKING THE APPROPRIATE CODE UNDER ITEM #1.
3. USE THE CODES ON THE ATTACHED TABLE TO FILL IN ITEMS 4, 5 AND 7. FOR ITEM 6, USE TABLE III ON THE BACK OF YOUR UNIFORM HAZARDOUS WASTE MANIFE
4. RETURN COMPLETED WASTE INVENTORY AMENDMENT TO THE FIRE DEPARTMENT ALONG WITH PART A AND PART B.

ADDITIONAL INSTRUCTIONS: ITEM 1: CHECK APPROPRIATE CODE: "A" INDICATES A WASTE THAT IS BEING ADDED TO YOUR EXISTING INVENTORY, "C" INDICATES A CHANGE IN THE INFORMATION THAT WAS REPORTED FOR THAT WASTE, "D" INDICATES A WASTE THAT HAS BEEN DELETED. ENTER THE HAZARDOUS WASTE NAME. ITEM 2: ENTER THE MAXIMUM QUANTITY HANDELED OR STORED AT ANY ONE TIME AT THE ABOVE LOCATION; INCLUDE UNITS (POUNDS, GALLONS, CUBIC FEET). ITEM 3: ENTER TOTAL YEARLY QUANTITY HANDELED OR STORED AT THE ABOVE LOCATION; INCLUDE UNITS (POUNDS, GALLONS, CUBIC FEET). ITEM 4: LIST ALL TYPES OF CONTAINERS USED TO STORE THE WASTE (USE TABLE 1). ITEM 5: USE ALL TREATMENT AND DISPOSAL METHODS THAT APPLY (USE TABLE 4). ITEM 6: ENTER THE HAZARDOUS WASTE CODE USED ON YOUR HAZARDOUS WASTE MANIFEST (TABLE III ON THE BACK OF THE MANIFEST). ITEM 7: ENTER THE ONE HAZARD CLASS THAT APPLIES TO THE WASTE (USE TABLE 3). ITEM 8: CHECK THIS BOX IF THE WASTE OR ANY INGREDIENT IS EXTREMELY HAZARDOUS (SEE ATTACHED LIST OF EXTREMELY HAZARDOUS SUBSTANCES). ITEM 9: ENTER HAZARDOUS INGREDIENTS AND PERCENTAGE OF CONCENTRATION. ITEM 10: ENTER THE CAS (CHEMICAL ABSTRACT SERVICE) NUMBER FOR EACH HAZARDOUS INGREDIENT (USE YOUR MSDS).

A ___ C ___ D ___ (1) HAZARDOUS WASTE NAME: RQ Waste Corrosive Liquid, n.o.s., Corrosive Material UN 1760 (Hydrochloric Acid & Oil) EPA # D002, D006, D007, D008

(2) MAXIMUM QUANTITY ANY TIME	(3) TOTAL YEARLY QUANTITY	(4) STORAGE TYPES	(5) TREAT & DISPOSAL	(6) WASTE CODE	(7) HAZARD CLASS	(8) EXTREMELY HAZARDOUS
55 gal.	55 gal.	B	03	N/A	2A	

(9) HAZARDOUS CHEMICAL INGREDIENTS & PERCENTAGE OF EACH		(10) CAS NUMBERS OF EACH INGREDIENT
Hydrochloric Acid	20 %	7647-01-0
Oil (virgin)	8 %	
Water	Balance %	
	%	
	%	

A ___ C ___ D ___ (1) HAZARDOUS WASTE NAME: Soil and Oil NON-RCRA Hazardous Waste Solid (Motor Oil Contaminated Soil)

(2) MAXIMUM QUANTITY ANY TIME	(3) TOTAL YEARLY QUANTITY	(4) STORAGE TYPES	(5) TREAT & DISPOSAL	(6) WASTE CODE	(7) HAZARD CLASS	(8) EXTREMELY HAZARDOUS
250 lb.	250 lb.	B	03	N/A	1D	

(9) HAZARDOUS CHEMICAL INGREDIENTS & PERCENTAGE OF EACH		(10) CAS NUMBERS OF EACH INGREDIENT
Dirt/Soil	80 %	
Oil (motor)	25 %	
Metal Shavings	1-2 %	
	%	
	%	
	%	

FOR OFFICE USE ONLY: INSP. ID ____ INSP. INIT ____ DATE ____ DATA ENTRY ID ____ DATA ENTRY INIT ____ DATE ____

PART C AMENDMENT FOR HAZARDOUS WASTE INVENTORY

LAFD # 026645-001-6 PAGE ___ OF ___

LOCATION OF HAZARDOUS WASTE: COMPLETE ALL ITEMS IN BOX

BUSINESS NAME: Allied-Signal Electrodynamics Division ADDRESS: 11600 Sherman Way, N. Hollywood, CA 91605

ROOM NAME OR NUMBER: W2 BUILDING NAME, OUTDOOR AREA, OR UNDERGROUND TANK NUMBERS ~~Hazardous Waste Storage Area~~

A ___ C ___ D ___ (1) HAZARDOUS WASTE NAME: Waste Polymeric Diphenylmethane Diisoyanate (Instapak) UN 2489

(2) MAXIMUM QUANTITY ANY TIME	(3) TOTAL YEARLY QUANTITY	(4) STORAGE TYPES	(5) TREAT & DISPOSAL	(6) WASTE CODE	(7) HAZARD CLASS	(8) EXTREMELY HAZARDOUS
200 lb.	200 lb.	~~B~~	~~03~~	N/A	1D	

(9) HAZARDOUS CHEMICAL INGREDIENTS & PERCENTAGE OF EACH		(10) CAS NUMBERS OF EACH INGREDIENT
4,4 Diphenylmethane	%	
Diisocyanate (MDI)	50 %	~~101-68-8~~
Higher molecular weight	%	
oligomers of MDI	50 %	9016-87-9
	%	
	%	

A ___ C ___ D ___ (1) HAZARDOUS WASTE NAME: RQ Waste Paint Related Material, Flammable Liquid NA 1263 (Paint Stripper) EPA # D001

(2) MAXIMUM QUANTITY ANY TIME	(3) TOTAL YEARLY QUANTITY	(4) STORAGE TYPES	(5) TREAT & DISPOSAL	(6) WASTE CODE	(7) HAZARD CLASS	(8) EXTREMELY HAZARDOUS
55 gal.	55 gal.	B	03	N/A	3A	

(9) HAZARDOUS CHEMICAL INGREDIENTS & PERCENTAGE OF EACH		(10) CAS NUMBERS OF EACH INGREDIENT
Paint Stripper	65 %	
Phenol	25 %	
Varnish	10 %	
	%	
	%	
	%	

A ___ C ___ D ___ (1) HAZARDOUS WASTE NAME: RQ Waste Cyanide Solution, n.o.s. Poison B Un 1935 EPA # F007

(2) MAXIMUM QUANTITY ANY TIME	(3) TOTAL YEARLY QUANTITY	(4) STORAGE TYPES	(5) TREAT & DISPOSAL	(6) WASTE CODE	(7) HAZARD CLASS	(8) EXTREMELY HAZARDOUS
465 gal.	1790 gal	B	02	711	5B	

(9) HAZARDOUS CHEMICAL INGREDIENTS & PERCENTAGE OF EACH		(10) CAS NUMBERS OF EACH INGREDIENT
~~cyanides~~	~~95~~ %	
cadmium	2 %	7440-43-9
chromium, zinc, copper, lead	%	
nickel, mercury, silver	balance %	
	%	
	%	

FOR OFFICE USE ONLY: INSP. ID ___ INSP. INIT ___ DATE ___ DATA ENTRY ID ___ DATA ENTRY INIT ___ DATE ___

PART C AMENDMENT FOR HAZARDOUS WASTE INVENTORY

LAFD # 026645-001-6 ____ OF ____

INSTRUCTIONS: READ ALL THE INSTRUCTIONS BELOW AND PHOTOCOPY EXTRA COPIES OF THIS FORM BEFORE COMPLETING IT.

1. COMPLETE A SEPARATE FORM FOR EACH BUILDING, OUTDOOR AREA, UNDERGROUND TANK OR ROOM WHERE HAZARDOUS WASTES INVENTORY IS BEING AMENDED. USE THE BOX BELOW TO SPECIFY THE LOCATION OF THE HAZARDOUS WASTES LISTED ON THIS FORM.

LOCATION OF HAZARDOUS WASTE: COMPLETE ALL ITEMS IN THIS BOX.

BUSINESS NAME: Allied-Signal Electrodynamics Division ADDRESS: 11600 Sherman Way, N. Hollywood, CA 91605

ROOM NAME OR NUMBER: W2 BUILDING NAME, OUTDOOR AREA, OR UNDERGROUND TANK NUMBERS Hazardous Waste Storage Area

2. COMPLETE ITEMS 1-10 FOR EACH ADDITION, CHANGE OR DELETION OF HAZARDOUS WASTE GENERATED, STORED OR HANDELED AT THE LOCATION SPECIFIED ABOVE. MAKE SURE YOU INDICATE WHETHER THE INFORMATION SHOULD BE ADDED, CHANGED OR DELETED FROM THE CURRENT DISCLOSURE THAT THE FIRE DEPARTMENT HAS ON FILE BY MARKING THE APPROPRIATE CODE UNDER ITEM #1.
3. USE THE CODES ON THE ATTACHED TABLE TO FILL IN ITEMS 4, 5 AND 7. FOR ITEM 6, USE TABLE III ON THE BACK OF YOUR UNIFORM HAZARDOUS WASTE MANIFE
4. RETURN COMPLETED WASTE INVENTORY AMENDMENT TO THE FIRE DEPARTMENT ALONG WITH PART A AND PART B.

ADDITIONAL INSTRUCTIONS: ITEM 1: CHECK APPROPRIATE CODE: "A" INDICATES A WASTE THAT IS BEING ADDED TO YOUR EXISTING INVENTORY, "C" INDICATES A CHANGE IN THE INFORMATION THAT WAS REPORTED FOR THAT WASTE, "D" INDICATES A WASTE THAT HAS BEEN DELETED. ENTER THE HAZARDOUS WASTE NAME. ITEM 2: ENTER THE MAXIMUM QUANTITY HANDELED OR STORED AT ANY ONE TIME AT THE ABOVE LOCATION; INCLUDE UNITS (POUNDS, GALLONS, CUBIC FEET). ITEM 3: ENTER TOTAL YEARLY QUANTITY HANDELED OR STORED AT THE ABOVE LOCATION; INCLUDE UNITS (POUNDS, GALLONS, CUBIC FEET). ITEM 4: LIST ALL TYPES OF CONTAINERS USED TO STORE THE WASTE (USE TABLE 1). ITEM 5: USE ALL TREATMENT AND DISPOSAL METHODS THAT APPLY (USE TABLE 4). ITEM 6: ENTER THE HAZARDOUS WASTE CODE USED ON YOUR HAZARDOUS WASTE MANIFEST (TABLE III ON THE BACK OF THE MANIFEST). ITEM 7: ENTER THE ONE HAZARD CLASS THAT APPLIES TO THE WASTE (USE TABLE 3). ITEM 8: CHECK THIS BOX IF THE WASTE OR ANY INGREDIENT IS EXTREMELY HAZARDOUS (SEE ATTACHED LIST OF EXTREMELY HAZARDOUS SUBSTANCES). ITEM 9: ENTER HAZARDOUS INGREDIENTS AND PERCENTAGE OF CONCENTRATION. ITEM 10: ENTER THE CAS (CHEMICAL ABSTRACT SERVICE) NUMBER FOR EACH HAZARDOUS INGREDIENT (USE YOUR MSDS).

(1) A ___ C ___ D ___ HAZARDOUS WASTE NAME: Waste Poisonous Solid, n.o.s. Poison B Un 2811 EPA # D007

(2) MAXIMUM QUANTITY ANY TIME	(3) TOTAL YEARLY QUANTITY	(4) STORAGE TYPES	(5) TREAT & DISPOSAL	(6) WASTE CODE	(7) HAZARD CLASS	(8) EXTREMELY HAZARDOUS
10 lb.	10 lb.	B	27	551	5B	

(9) HAZARDOUS CHEMICAL INGREDIENTS & PERCENTAGE OF EACH		(10) CAS NUMBERS OF EACH INGREDIENT
arsenious oxide	100 %	
	%	
	%	
	%	
	%	
	%	

(1) A ___ C ___ D ___ HAZARDOUS WASTE NAME: RQ Hazardous Waste Solid, n.o.s., ORM-E (Chrome Cakes) NA 9189 EPA # D007, D008, D006

(2) MAXIMUM QUANTITY ANY TIME	(3) TOTAL YEARLY QUANTITY	(4) STORAGE TYPES	(5) TREAT & DISPOSAL	(6) WASTE CODE	(7) HAZARD CLASS	(8) EXTREMELY HAZARDOUS
475 c. yd.	1000 lb.	B	27	181	1D	

(9) HAZARDOUS CHEMICAL INGREDIENTS & PERCENTAGE OF EACH		(10) CAS NUMBERS OF EACH INGREDIENT
sodium chromate	8-11 %	7775-11-3
phosphates	.01-.06	
sodium sulfate	9-12 %	7757-82-6
other metals	.35 %	
dirt	6.59-17.64	
water	65-70 %	

FOR OFFICE USE ONLY: INSP. ID ____ INSP. INIT ____ DATE ____ DATA ENTRY ID ____ DATA ENTRY INIT ____ DATE ____

PART C AMENDMENT FOR HAZARDOUS WASTE INVENTORY

LAFD # 026645-001-6 PAGE ___ OF ___

LOCATION OF HAZARDOUS WASTE: COMPLETE ALL ITEMS IN BOX

BUSINESS NAME: Allied-Signal Electrodynamics Division ADDRESS: 11600 Sherman Way, N. Hollywood, CA 91605

ROOM NAME OR NUMBER: W2 BUILDING NAME, OUTDOOR AREA, OR UNDERGROUND TANK NUMBERS: Hazardous Waste Storage Area

A ___ C ___ D ___

(1) HAZARDOUS WASTE NAME: RQ Waste Corrosive Solid, n.o.s., Corrosive Material UN 1759 (Chromic Acid Sludge) EPA # D002

(2) MAXIMUM QUANTITY ANY TIME	(3) TOTAL YEARLY QUANTITY	(4) STORAGE TYPES	(5) TREAT & DISPOSAL	(6) WASTE CODE	(7) HAZARD CLASS	(8) EXTREMELY HAZARDOUS
75 yd.	75 yd.	P	27	N/A	2A	

(9) HAZARDOUS CHEMICAL INGREDIENTS & PERCENTAGE OF EACH		(10) CAS NUMBERS OF EACH INGREDIENT
chromic acid	.5-4%	7738-94-5
sulfuric acid	.5-2%	7664-93-9
dirt, mud, metal chips	30-40%	
moisture	balance%	
	%	
	%	

A ___ C ___ D ___

(1) HAZARDOUS WASTE NAME: Hazardous Waste Liquid, n.o.s. ORM-E (clarifier waste) NA 9189 EPA # D006

(2) MAXIMUM QUANTITY ANY TIME	(3) TOTAL YEARLY QUANTITY	(4) STORAGE TYPES	(5) TREAT & DISPOSAL	(6) WASTE CODE	(7) HAZARD CLASS	(8) EXTREMELY HAZARDOUS
1500 gal.	1500 gal.	M	27	135	1D	

(9) HAZARDOUS CHEMICAL INGREDIENTS & PERCENTAGE OF EACH		(10) CAS NUMBERS OF EACH INGREDIENT
sludge	2-5%	
oil	5-10%	
water	balance%	
	%	
	%	
	%	

A ___ C ___ D ___

(1) HAZARDOUS WASTE NAME: Hazardous Waste Solid, n.o.s. ORM-E (Aluminum Oxide Dust) NA 9189 EPA # D006 D007 D008

(2) MAXIMUM QUANTITY ANY TIME	(3) TOTAL YEARLY QUANTITY	(4) STORAGE TYPES	(5) TREAT & DISPOSAL	(6) WASTE CODE	(7) HAZARD CLASS	(8) EXTREMELY HAZARDOUS
2400 lb.	4200 lb.	B	27	181	1D	

(9) HAZARDOUS CHEMICAL INGREDIENTS & PERCENTAGE OF EACH		(10) CAS NUMBERS OF EACH INGREDIENT
aluminum oxide dust	98-100%	
	%	
	%	
	%	
	%	
	%	

FOR OFFICE USE ONLY: INSP. ID ___ INSP. INIT ___ DATE ___ DATA ENTRY ID ___ DATA ENTRY INIT ___ DATE ___

PART C AMENDMENT FOR HAZARDOUS WASTE INVENTORY

LAFD # 026645-001-6 ____ OF ____

INSTRUCTIONS: READ ALL THE INSTRUCTIONS BELOW AND PHOTOCOPY EXTRA COPIES OF THIS FORM BEFORE COMPLETING IT.

1. COMPLETE A SEPARATE FORM FOR EACH BUILDING, OUTDOOR AREA, UNDERGROUND TANK OR ROOM WHERE HAZARDOUS WASTES INVENTORY IS BEING AMENDED. USE THE BOX BELOW TO SPECIFY THE LOCATION OF THE HAZARDOUS WASTES LISTED ON THIS FORM.

LOCATION OF HAZARDOUS WASTE: COMPLETE ALL ITEMS IN THIS BOX.

BUSINESS NAME: Allied-Signal Electrodynamics Division ADDRESS: 11600 Sherman Way, N. Hollywood, CA 91605

ROOM NAME OR NUMBER: W2 BUILDING NAME, OUTDOOR AREA, OR UNDERGROUND TANK NUMBERS: Hazardous Waste Storage Area

2. COMPLETE ITEMS 1-10 FOR EACH ADDITION, CHANGE OR DELETION OF HAZARDOUS WASTE GENERATED, STORED OR HANDELED AT THE LOCATION SPECIFIED ABOVE. MAKE SURE YOU INDICATE WHETHER THE INFORMATION SHOULD BE ADDED, CHANGED OR DELETED FROM THE CURRENT DISCLOSURE THAT THE FIRE DEPARTMENT HAS ON FILE BY MARKING THE APPROPRIATE CODE UNDER ITEM #1.
3. USE THE CODES ON THE ATTACHED TABLE TO FILL IN ITEMS 4, 5 AND 7. FOR ITEM 6, USE TABLE III ON THE BACK OF YOUR UNIFORM HAZARDOUS WASTE MANIFE
4. RETURN COMPLETED WASTE INVENTORY AMENDMENT TO THE FIRE DEPARTMENT ALONG WITH PART A AND PART B.

ADDITIONAL INSTRUCTIONS: ITEM 1: CHECK APPROPRIATE CODE: "A" INDICATES A WASTE THAT IS BEING ADDED TO YOUR EXISTING INVENTORY, "C" INDICATES A CHANGE IN THE INFORMATION THAT WAS REPORTED FOR THAT WASTE, "D" INDICATES A WASTE THAT HAS BEEN DELETED. ENTER THE HAZARDOUS WASTE NAME. ITEM 2: ENTER THE MAXIMUM QUANTITY HANDELED OR STORED AT ANY ONE TIME AT THE ABOVE LOCATION; INCLUDE UNITS (POUNDS, GALLONS, CUBIC FEET). ITEM 3: ENTER TOTAL YEARLY QUANTITY HANDELED OR STORED AT THE ABOVE LOCATION; INCLUDE UNITS (POUNDS, GALLONS, CUBIC FEET). ITEM 4: LIST ALL TYPES OF CONTAINERS USED TO STORE THE WASTE (USE TABLE 1). ITEM 5: USE ALL TREATMENT AND DISPOSAL METHODS THAT APPLY (USE TABLE 4). ITEM 6: ENTER THE HAZARDOUS WASTE CODE USED ON YOUR HAZARDOUS WASTE MANIFEST (TABLE III ON THE BACK OF THE MANIFEST). ITEM 7: ENTER THE ONE HAZARD CLASS THAT APPLIES TO THE WASTE (USE TABLE 3). ITEM 8: CHECK THIS BOX IF THE WASTE OR ANY INGREDIENT IS EXTREMELY HAZARDOUS (SEE ATTACHED LIST OF EXTREMELY HAZARDOUS SUBSTANCES). ITEM 9: ENTER HAZARDOUS INGREDIENTS AND PERCENTAGE OF CONCENTRATION. ITEM 10: ENTER THE CAS (CHEMICAL ABSTRACT SERVICE) NUMBER FOR EACH HAZARDOUS INGREDIENT (USE YOUR MSDS).

(1) HAZARDOUS WASTE NAME (A / C / D)	(2) MAXIMUM QUANTITY ANY TIME	(3) TOTAL YEARLY QUANTITY	(4) STORAGE TYPES	(5) TREAT & DISPOSAL	(6) WASTE CODE	(7) HAZARD CLASS	(8) EXTREMELY HAZARDOUS	(9) HAZARDOUS CHEMICAL INGREDIENTS & PERCENTAGE OF EACH	(10) CAS NUMBERS OF EACH INGREDIENT
Waste Corrosive Liquid, n.o.s. Corrosive Material Un 1760 (Lab Packed Material) EPA # D002	5 gal.	5 gal.	B	03	N/A	2A		LAB PACKED MATERIALS	

(1) HAZARDOUS WASTE NAME (A / C / D)	(2) MAXIMUM QUANTITY ANY TIME	(3) TOTAL YEARLY QUANTITY	(4) STORAGE TYPES	(5) TREAT & DISPOSAL	(6) WASTE CODE	(7) HAZARD CLASS	(8) EXTREMELY HAZARDOUS	(9) HAZARDOUS CHEMICAL INGREDIENTS & PERCENTAGE OF EACH	(10) CAS NUMBERS OF EACH INGREDIENT
Hazardous Waste Liquid, n.o.s. ORM-E (Lab Packed Material) NA 9189 EPA # P030	10 gal.	10 gal.	B	03	N/A	1D		LAB PACKED MATERIALS	

FOR OFFICE USE ONLY: INSP. ID ____ INSP. INIT ____ DATE ____ DATA ENTRY ID ____ DATA ENTRY INIT ____ DATE ____

PART C AMENDMENT FOR HAZARDOUS WASTE INVENTORY

LAFD # 026645-001-6 PAGE ___ OF ___

LOCATION OF HAZARDOUS WASTE: COMPLETE ALL ITEMS IN BOX

BUSINESS NAME: Allied-Signal Electrodynamics Division ADDRESS: 11600 Sherman Way, N. Hollywood, CA 91605

ROOM NAME OR NUMBER: W2 BUILDING NAME, OUTDOOR AREA, OR UNDERGROUND TANK NUMBERS Hazardous Waste Storage Area

A C D	(1) HAZARDOUS WASTE NAME	(2) MAXIMUM QUANTITY ANY TIME	(3) TOTAL YEARLY QUANTITY	(4) STORAGE TYPES	(5) TREAT & DISPOSAL	(6) WASTE CODE	(7) HAZARD CLASS	(8) EXTREMELY HAZARDOUS	(9) HAZARDOUS CHEMICAL INGREDIENTS & PERCENTAGE OF EACH	(10) CAS NUMBERS OF EACH INGREDIENT
	Waste Flammable Liquid, n.o.s., Flammable Liquid UN 1993 (Lab Packed Material) EPA # D001 F005 F024 F003 D030 U052 U196 U002 U080	200 gal.	355 gal.	B	03	N/A	3A		LAB PACKED MATERIALS	

A C D	(1) HAZARDOUS WASTE NAME	(2) MAXIMUM QUANTITY ANY TIME	(3) TOTAL YEARLY QUANTITY	(4) STORAGE TYPES	(5) TREAT & DISPOSAL	(6) WASTE CODE	(7) HAZARD CLASS	(8) EXTREMELY HAZARDOUS	(9) HAZARDOUS CHEMICAL INGREDIENTS & PERCENTAGE OF EACH	(10) CAS NUMBERS OF EACH INGREDIENT
	Waste Compressed Gas, n.o.s. Flammable Gas UN 1954 (Lab Packed Material) EPA # D001 F002	5 gal.	5 gal.	B	03	N/A	3A		LAB PACKED MATERIALS	

A C D	(1) HAZARDOUS WASTE NAME	(2) MAXIMUM QUANTITY ANY TIME	(3) TOTAL YEARLY QUANTITY	(4) STORAGE TYPES	(5) TREAT & DISPOSAL	(6) WASTE CODE	(7) HAZARD CLASS	(8) EXTREMELY HAZARDOUS	(9) HAZARDOUS CHEMICAL INGREDIENTS & PERCENTAGE OF EACH	(10) CAS NUMBERS OF EACH INGREDIENT
	Hazardous Waste Solid, n.o.s. ORM-E (Lab Packed Material) NA 9189 EPA # D008	50 lb.	130 lb.	B	03	N/A	1D		LAB PACKED MATERIALS	

FOR OFFICE USE ONLY: INSP. ID ___ INSP. INIT ___ DATE ___ DATA ENTRY ID ___ DATA ENTRY INIT ___ DATE ___

PART C AMENDMENT FOR HAZARDOUS WASTE INVENTORY

LAFD # 026645-001-6 ____ OF ____

INSTRUCTIONS: READ ALL THE INSTRUCTIONS BELOW AND PHOTOCOPY EXTRA COPIES OF THIS FORM BEFORE COMPLETING IT.

1. COMPLETE A SEPARATE FORM FOR EACH BUILDING, OUTDOOR AREA, UNDERGROUND TANK OR ROOM WHERE HAZARDOUS WASTES INVENTORY IS BEING AMENDED. USE THE BOX BELOW TO SPECIFY THE LOCATION OF THE HAZARDOUS WASTES LISTED ON THIS FORM.

LOCATION OF HAZARDOUS WASTE: COMPLETE ALL ITEMS IN THIS BOX.

BUSINESS NAME: Allied-Signal Electrodynamics Division ADDRESS: 11600 Sherman Way, N. Hollywood, CA 91605

ROOM NAME OR NUMBER: W2 BUILDING NAME, OUTDOOR AREA, OR UNDERGROUND TANK NUMBERS Hazardous Waste Storage Area

2. COMPLETE ITEMS 1-10 FOR EACH ADDITION, CHANGE OR DELETION OF HAZARDOUS WASTE GENERATED, STORED OR HANDELED AT THE LOCATION SPECIFIED ABOVE. MAKE SURE YOU INDICATE WHETHER THE INFORMATION SHOULD BE ADDED, CHANGED OR DELETED FROM THE CURRENT DISCLOSURE THAT THE FIRE DEPARTMENT HAS ON FILE BY MARKING THE APPROPRIATE CODE UNDER ITEM #1.
3. USE THE CODES ON THE ATTACHED TABLE TO FILL IN ITEMS 4, 5 AND 7. FOR ITEM 6, USE TABLE III ON THE BACK OF YOUR UNIFORM HAZARDOUS WASTE MANIFEST
4. RETURN COMPLETED WASTE INVENTORY AMENDMENT TO THE FIRE DEPARTMENT ALONG WITH PART A AND PART B.

ADDITIONAL INSTRUCTIONS: ITEM 1: CHECK APPROPRIATE CODE: "A" INDICATES A WASTE THAT IS BEING ADDED TO YOUR EXISTING INVENTORY, "C" INDICATES A CHANGE IN THE INFORMATION THAT WAS REPORTED FOR THAT WASTE, "D" INDICATES A WASTE THAT HAS BEEN DELETED. ENTER THE HAZARDOUS WASTE NAME. ITEM 2: ENTER THE MAXIMUM QUANTITY HANDELED OR STORED AT ANY ONE TIME AT THE ABOVE LOCATION; INCLUDE UNITS (POUNDS, GALLONS, CUBIC FEET). ITEM 3: ENTER TOTAL YEARLY QUANTITY HANDELED OR STORED AT THE ABOVE LOCATION; INCLUDE UNITS (POUNDS, GALLONS, CUBIC FEET). ITEM 4: LIST ALL TYPES OF CONTAINERS USED TO STORE THE WASTE (USE TABLE 1). ITEM 5: USE ALL TREATMENT AND DISPOSAL METHODS THAT APPLY (USE TABLE 4). ITEM 6: ENTER THE HAZARDOUS WASTE CODE USED ON YOUR HAZARDOUS WASTE MANIFEST (TABLE III ON THE BACK OF THE MANIFEST). ITEM 7: ENTER THE ONE HAZARD CLASS THAT APPLIES TO THE WASTE (USE TABLE 3). ITEM 8: CHECK THIS BOX IF THE WASTE OR ANY INGREDIENT IS EXTREMELY HAZARDOUS (SEE ATTACHED LIST OF EXTREMELY HAZARDOUS SUBSTANCES). ITEM 9: ENTER HAZARDOUS INGREDIENTS AND PERCENTAGE OF CONCENTRATION. ITEM 10: ENTER THE CAS (CHEMICAL ABSTRACT SERVICE) NUMBER FOR EACH HAZARDOUS INGREDIENT (USE YOUR MSDS).

(1) A ___ C ___ D ___ HAZARDOUS WASTE NAME	(2) MAXIMUM QUANTITY ANY TIME	(3) TOTAL YEARLY QUANTITY	(4) STORAGE TYPES	(5) TREAT & DISPOSAL	(6) WASTE CODE	(7) HAZARD CLASS	(8) EXTREMELY HAZARDOUS
RQ Hazardous Waste Liquid, n.o.s. ORM-E (Waste Sodium Bichromate/Nitric Acid) NA 9189 EPA # D007	165 gal.	165 gal.	B	02	723	1D	

(9) HAZARDOUS CHEMICAL INGREDIENTS & PERCENTAGE OF EACH		(10) CAS NUMBERS OF EACH INGREDIENT
sodium bichromate	1-3 %	10588-01-9
water	balance %	
nitric acid	3-5 %	7697-37-2
	%	
	%	
	%	

(1) A ___ C ___ D ___ HAZARDOUS WASTE NAME	(2) MAXIMUM QUANTITY ANY TIME	(3) TOTAL YEARLY QUANTITY	(4) STORAGE TYPES	(5) TREAT & DISPOSAL	(6) WASTE CODE	(7) HAZARD CLASS	(8) EXTREMELY HAZARDOUS
RQ Hazardous Waste Liquid, n.o.s. ORM-E (Waste Tin Fluoroborate) NA 9189 EPA # D006	55 gal.	55 gal.	B	02	722	1D	

(9) HAZARDOUS CHEMICAL INGREDIENTS & PERCENTAGE OF EACH		(10) CAS NUMBERS OF EACH INGREDIENT
tin fluoroborate	5-2 %	
solids	10-15 %	
water	balance %	
	%	
	%	
	%	

FOR OFFICE USE ONLY: INSP. ID ____ INSP. INIT ____ DATE ____ DATA ENTRY ID ____ DATA ENTRY INIT ____ DATE ____

PART C AMENDMENT FOR HAZARDOUS WASTE INVENTORY

LAFD # 026645-001-G PAGE ___ OF ___

LOCATION OF HAZARDOUS WASTE: COMPLETE ALL ITEMS IN BOX

BUSINESS NAME: Allied-Signal Electrodynamics Division ADDRESS: 11600 Sherman Way, N. Hollywood, CA 91605

ROOM NAME OR NUMBER: W2 BUILDING NAME, OUTDOOR AREA, OR UNDERGROUND TANK NUMBERS: Hazardous Waste Storage Area

(1) HAZARDOUS WASTE NAME	(2) MAXIMUM QUANTITY ANY TIME	(3) TOTAL YEARLY QUANTITY	(4) STORAGE TYPES	(5) TREAT & DISPOSAL	(6) WASTE CODE	(7) HAZARD CLASS	(8) EXTREMELY HAZARDOUS	(9) HAZARDOUS CHEMICAL INGREDIENTS & PERCENTAGE OF EACH	(10) CAS NUMBERS OF EACH INGREDIENT
A ___ C ___ D ___ RQ Waste Corrosive Solid, n.o.s. Corrosive Material UN 1759 (Waste Sodium Hydroxide) EPA # D002	350 lb.	500 lb.	B	27	141	2A		sodium hydroxide 100 %	

(1) HAZARDOUS WASTE NAME	(2) MAXIMUM QUANTITY ANY TIME	(3) TOTAL YEARLY QUANTITY	(4) STORAGE TYPES	(5) TREAT & DISPOSAL	(6) WASTE CODE	(7) HAZARD CLASS	(8) EXTREMELY HAZARDOUS	(9) HAZARDOUS CHEMICAL INGREDIENTS & PERCENTAGE OF EACH	(10) CAS NUMBERS OF EACH INGREDIENT
A ___ C ___ D ___ RQ Hazardous Waste Liquid, n.o.s. ORM-E (Waste Nickel Sulfamate) NA 9189 EPA # F006	110 gal.	210 gal.	B	02	726	1D		Nickel sulfamate 5-10 %	
								water 85-91 %	
								sodium hydroxide 4-5 %	

(1) HAZARDOUS WASTE NAME	(2) MAXIMUM QUANTITY ANY TIME	(3) TOTAL YEARLY QUANTITY	(4) STORAGE TYPES	(5) TREAT & DISPOSAL	(6) WASTE CODE	(7) HAZARD CLASS	(8) EXTREMELY HAZARDOUS	(9) HAZARDOUS CHEMICAL INGREDIENTS & PERCENTAGE OF EACH	(10) CAS NUMBERS OF EACH INGREDIENT
A ___ C ___ D ___ RQ Waste Chromic Acid Solution Corrosive Material UN 1755 EPA # F006	275 gal.	275 gal.	B	02	791	2A		chromic acid 60 %	7738-94-5
								water 40 %	

FOR OFFICE USE ONLY: INSP. ID ___ INSP. INIT ___ DATE ___ DATA ENTRY ID ___ DATA ENTRY INIT ___ DATE ___

PART C AMENDMENT FOR HAZARDOUS WASTE INVENTORY

LAFD # 026645-001-6 ____ OF ____

INSTRUCTIONS: READ ALL THE INSTRUCTIONS BELOW AND PHOTOCOPY EXTRA COPIES OF THIS FORM BEFORE COMPLETING IT.

1. COMPLETE A SEPARATE FORM FOR EACH BUILDING, OUTDOOR AREA, UNDERGROUND TANK OR ROOM WHERE HAZARDOUS WASTES INVENTORY IS BEING AMENDED. USE THE BOX BELOW TO SPECIFY THE LOCATION OF THE HAZARDOUS WASTES LISTED ON THIS FORM.

LOCATION OF HAZARDOUS WASTE: COMPLETE ALL ITEMS IN THIS BOX.

BUSINESS NAME: Allied-Signal Electrodynamics Division ADDRESS: 11600 Sherman Way, N. Hollywood, CA 91605

ROOM NAME OR NUMBER: W3 BUILDING NAME, OUTDOOR AREA, OR UNDERGROUND TANK NUMBERS: Waste Coolant Storage Tanks (recyclable)

2. COMPLETE ITEMS 1-10 FOR EACH ADDITION, CHANGE OR DELETION OF HAZARDOUS WASTE GENERATED, STORED OR HANDELED AT THE LOCATION SPECIFIED ABOVE. MAKE SURE YOU INDICATE WHETHER THE INFORMATION SHOULD BE ADDED, CHANGED OR DELETED FROM THE CURRENT DISCLOSURE THAT THE FIRE DEPARTMENT HAS ON FILE BY MARKING THE APPROPRIATE CODE UNDER ITEM #1.
3. USE THE CODES ON THE ATTACHED TABLE TO FILL IN ITEMS 4, 5 AND 7. FOR ITEM 6, USE TABLE III ON THE BACK OF YOUR UNIFORM HAZARDOUS WASTE MANIFE
4. RETURN COMPLETED WASTE INVENTORY AMENDMENT TO THE FIRE DEPARTMENT ALONG WITH PART A AND PART B.

ADDITIONAL INSTRUCTIONS: ITEM 1: CHECK APPROPRIATE CODE: "A" INDICATES A WASTE THAT IS BEING ADDED TO YOUR EXISTING INVENTORY, "C" INDICATES A CHANGE IN THE INFORMATION THAT WAS REPORTED FOR THAT WASTE, "D" INDICATES A WASTE THAT HAS BEEN DELETED. ENTER THE HAZARDOUS WASTE NAME. ITEM 2: ENTER THE MAXIMUM QUANTITY HANDELED OR STORED AT ANY ONE TIME AT THE ABOVE LOCATION; INCLUDE UNITS (POUNDS, GALLONS, CUBIC FEET). ITEM 3: ENTER TOTAL YEARLY QUANTITY HANDELED OR STORED AT THE ABOVE LOCATION; INCLUDE UNITS (POUNDS, GALLONS, CUBIC FEET). ITEM 4: LIST ALL TYPES OF CONTAINERS USED TO STORE THE WASTE (USE TABLE 1). ITEM 5: USE ALL TREATMENT AND DISPOSAL METHODS THAT APPLY (USE TABLE 4). ITEM 6: ENTER THE HAZARDOUS WASTE CODE USED ON YOUR HAZARDOUS WASTE MANIFEST (TABLE III ON THE BACK OF THE MANIFEST). ITEM 7: ENTER THE ONE HAZARD CLASS THAT APPLIES TO THE WASTE (USE TABLE 3). ITEM 8: CHECK THIS BOX IF THE WASTE OR ANY INGREDIENT IS EXTREMELY HAZARDOUS (SEE ATTACHED LIST OF EXTREMELY HAZARDOUS SUBSTANCES). ITEM 9: ENTER HAZARDOUS INGREDIENTS AND PERCENTAGE OF CONCENTRATION. ITEM 10: ENTER THE CAS (CHEMICAL ABSTRACT SERVICE) NUMBER FOR EACH HAZARDOUS INGREDIENT (USE YOUR MSDS).

A ___ C ___ D ___ (1) HAZARDOUS WASTE NAME: Hazardous Waste Liquid, n.o.s. ORM-E NA 9189 (Waste Coolant)

(2) MAXIMUM QUANTITY ANY TIME	(3) TOTAL YEARLY QUANTITY	(4) STORAGE TYPES	(5) TREAT & DISPOSAL	(6) WASTE CODE	(7) HAZARD CLASS	(8) EXTREMELY HAZARDOUS
3,000 gal.	18,000 gal	D	02	221	1D	

(9) HAZARDOUS CHEMICAL INGREDIENTS & PERCENTAGE OF EACH		(10) CAS NUMBERS OF EACH INGREDIENT
water soluble oils	%	
lubricating oils	%	
water	%	
	%	
	%	
	%	

A ___ C ___ D ___ (1) HAZARDOUS WASTE NAME:

(2) MAXIMUM QUANTITY ANY TIME	(3) TOTAL YEARLY QUANTITY	(4) STORAGE TYPES	(5) TREAT & DISPOSAL	(6) WASTE CODE	(7) HAZARD CLASS	(8) EXTREMELY HAZARDOUS

(9) HAZARDOUS CHEMICAL INGREDIENTS & PERCENTAGE OF EACH		(10) CAS NUMBERS OF EACH INGREDIENT
	%	
	%	
	%	
	%	
	%	
	%	

FOR OFFICE USE ONLY: INSP. ID ____ INSP. INIT ____ DATE ____ DATA ENTRY ID ____ DATA ENTRY INIT ____ DATE ____

SITE MAP FOR BUSINESS PLAN (BP-6)

LEGEND FOR SITE MAP NOTES

- N — North
- A — Site Map for Stairway and Building "A" Access
- B — Site Map for Stairway and Building "B" Access
  - First Floor Only
  - Second & Third Floor Only
- C — Site Map for Stairway and Building "C" Access
- S — Site Map for Building "S" Access
- F — Site Map for Building "F" Access
- S1 — Trichloroethane Storage Tank
- S2 — Pressurized Cylinder Storage
- S3 — Acid Room
- S4 — Hazardous Material Storage - no reportable quantities.
- S5 — Hazardous Material Storage - no reportable quantities.
- S6 — Hazardous Material Storage - no reportable quantities.
- S7 — Cutting Oil and Coolant Storage Area
- S8 — Flammable Storage Area
- S9 — Plating & Processing Department - chemicals in process tanks.
- S10 — Shipping and Receiving Department
- W1 — Waste Oil (Recyclable) Storage Tank
- W2 — Hazardous Waste Storage Area
- W3 — Waste Coolant (Recyclable) Storage Tanks

Business Name: Allied Signal Electrodynamics Div. LAFD Numbers: 026645-001-6 Emergency Phone: (818) 765-1015

Business Adress (Site Address): 11600 Sherman Way No. Hollywood, CA 91605-5887 Facility Unit: Site Map - Legend of Notes

Main Business Activity: Aircraft Parts Manufacturing Scale of Map: 1 in = _____ ft Date: 2/1/91

(KEY TO SYMBOLS AND ABBREVIATIONS ON THE FRONT OF THIS FORM)

SITE MAP FOR BUSINESS PLAN (BP-6)

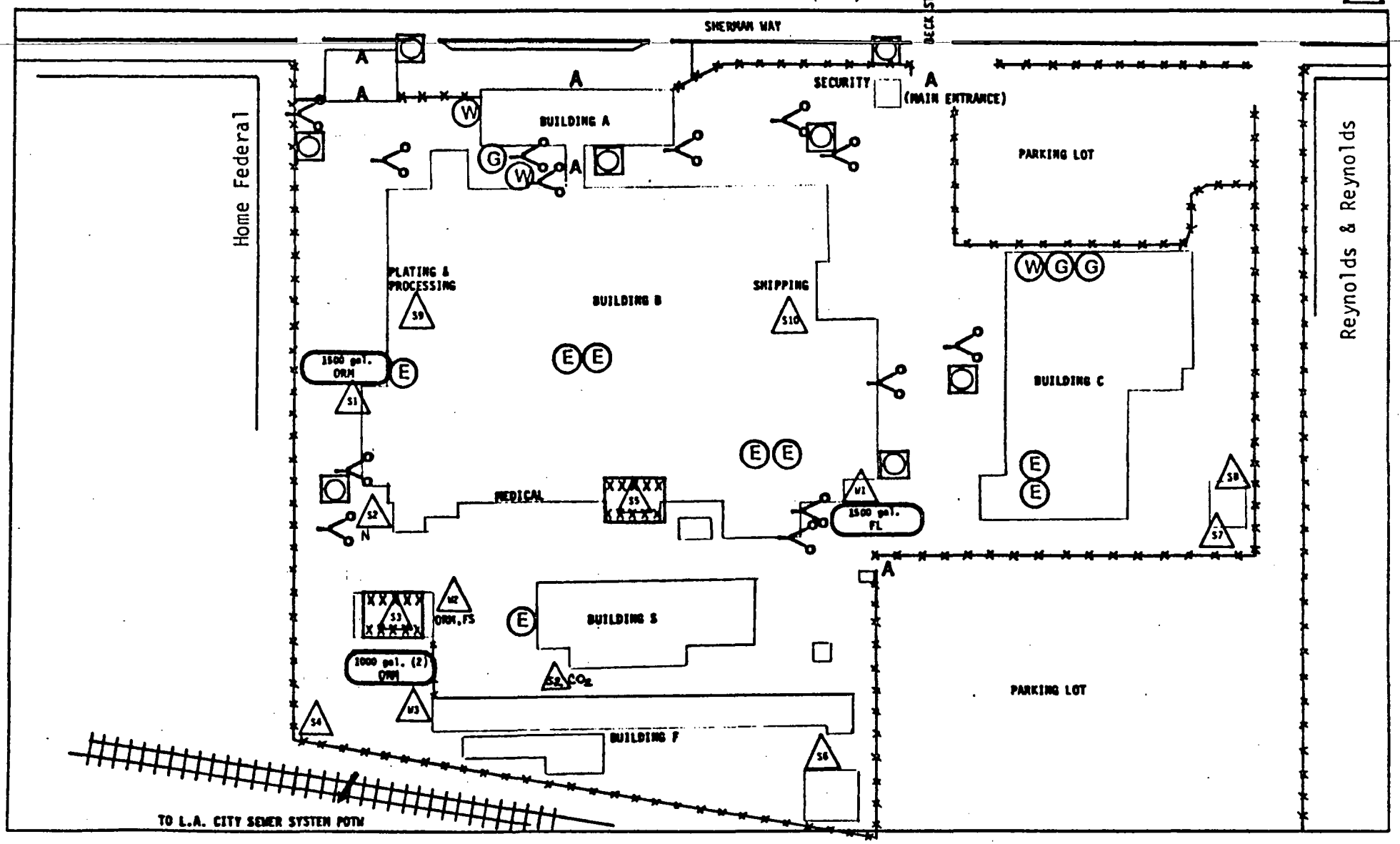

Business Name: Allied Signal Electrodynamics Div. LAFD Numbers: 026645-001-6 Emergency Phone: (818) 765-1015

Business Adress (Site Address): 11600 Sherman Way No. Hollywood, CA 91605-5887 Facility Unit: Site Map - All Buildings

Main Business Activity: Aircraft Parts Manufacturing Scale of Map: 1 in = 128 ft Date: 2/1/91

(KEY TO SYMBOLS AND ABBREVIATIONS ON THE FRONT OF THIS FORM)

SITE MAP FOR BUSINESS PLAN (BP-6)

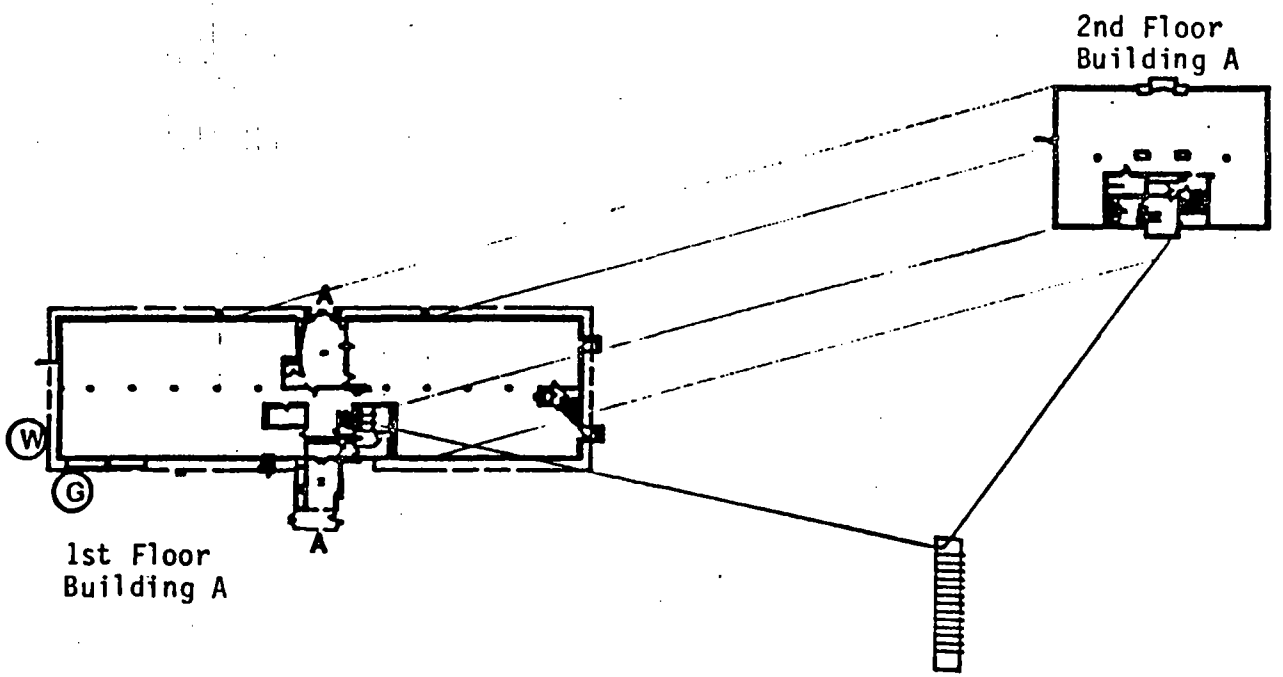

Business Name: Allied Signal Electrodynamics Div. LAFD Numbers: 026645-001-6 Emergency Phone: (818) 765-1015

Business Adress (Site Address): 11600 Sherman Way No. Hollywood, CA 91605-5887 Facility Unit: Building A

Main Business Activity: Aircraft Parts Manufacturing Scale of Map: 1 in = 64 ft Date: 2/1/91

(KEY TO SYMBOLS AND ABBREVIATIONS ON THE FRONT OF THIS FORM)

SITE MAP FOR BUS SS PLAN (BP-6)

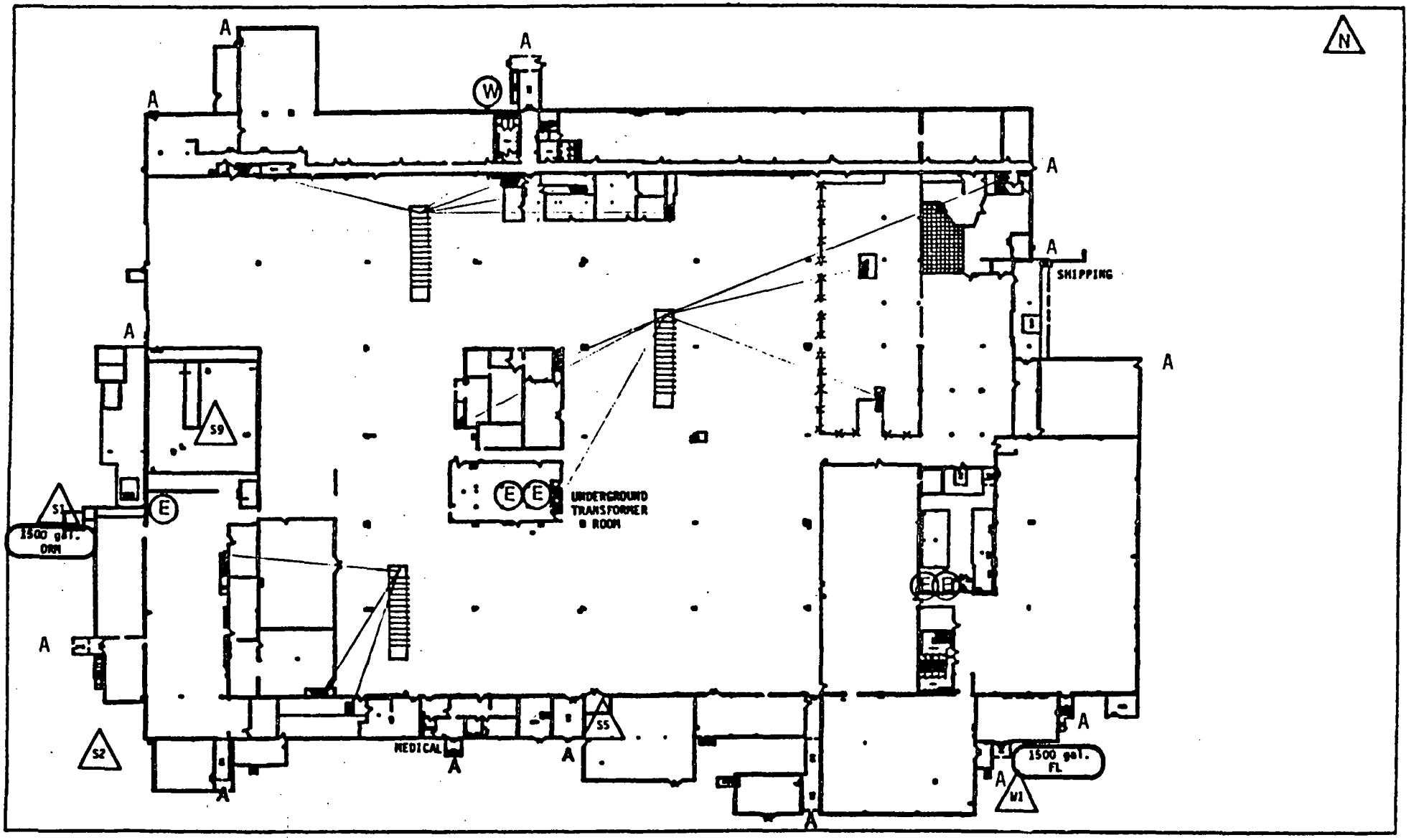

Business Name: Allied Signal Electrodynamics Div. LAFD Numbers: 026645-001-6 Emergency Phone: (818) 765-1015

Business Adress (Site Address): 11600 Sherman Way No. Hollywood, CA 91605-5887 Facility Unit: Building B - Ground Floor

Main Business Activity: Aircraft Parts Manufacturing Scale of Map: 1 in = 64 ft Date: 2/1/91

(KEY TO SYMBOLS AND ABBREVIATIONS ON THE FRONT OF THIS FORM)

SITE MAP FOR B[illegible]NESS PLAN (BP-6)

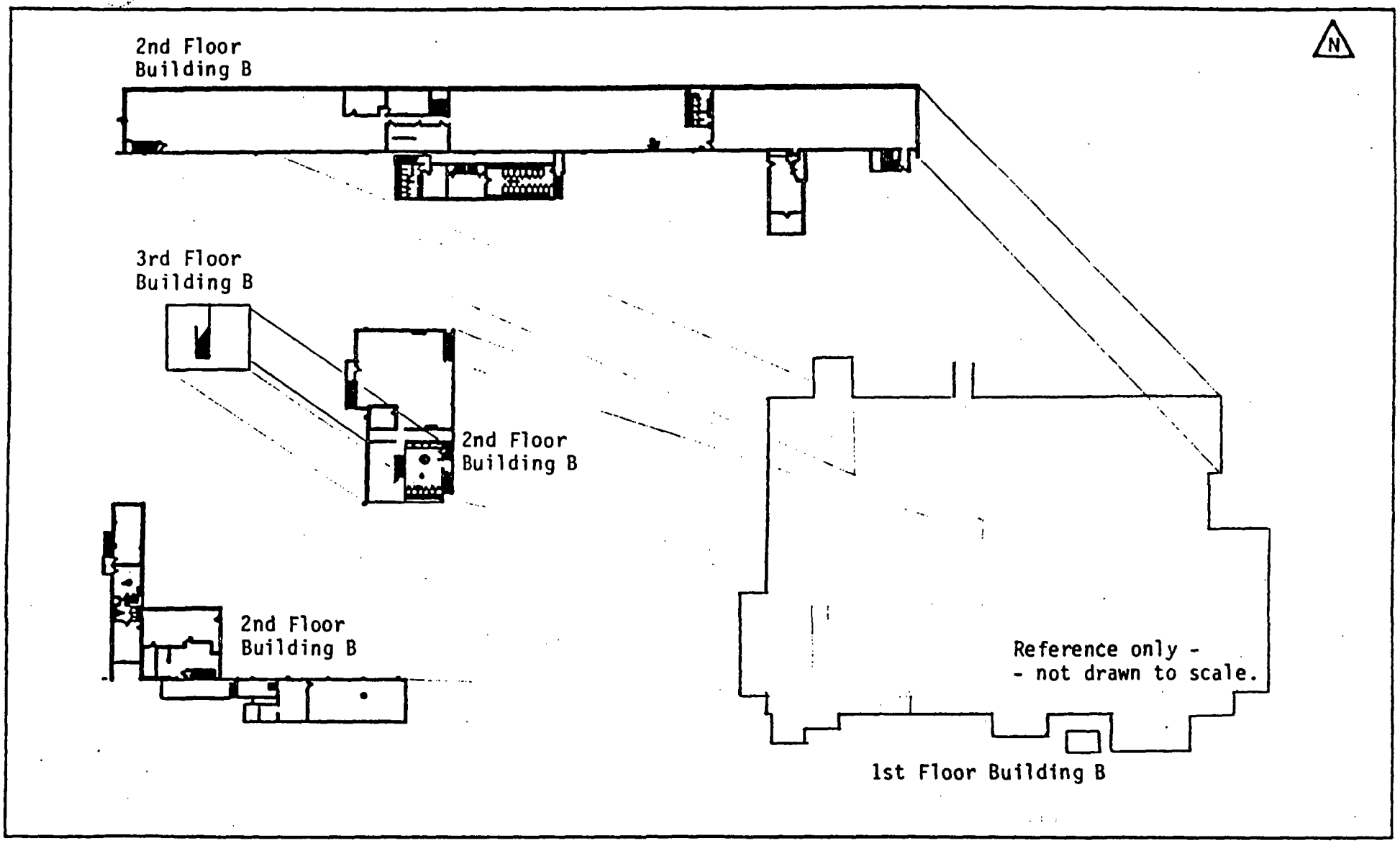

Business Name: Allied Signal Electrodynamics Div. LAFD Numbers: 026645-001-6 Emergency Phone: (818) 765-1015

Business Adress (Site Address): 11600 Sherman Way No. Hollywood, CA 91605-5887 Facility Unit: Building B - Upstairs

Main Business Activity: Aircraft Parts Manufacturing Scale of Map: 1 in = 64 ft Date: 2/1/91

(KEY TO SYMBOLS AND ABBREVIATIONS ON THE FRONT OF THIS FORM)

SITE MAP FOR BU[illegible]SS PLAN (BP-6)

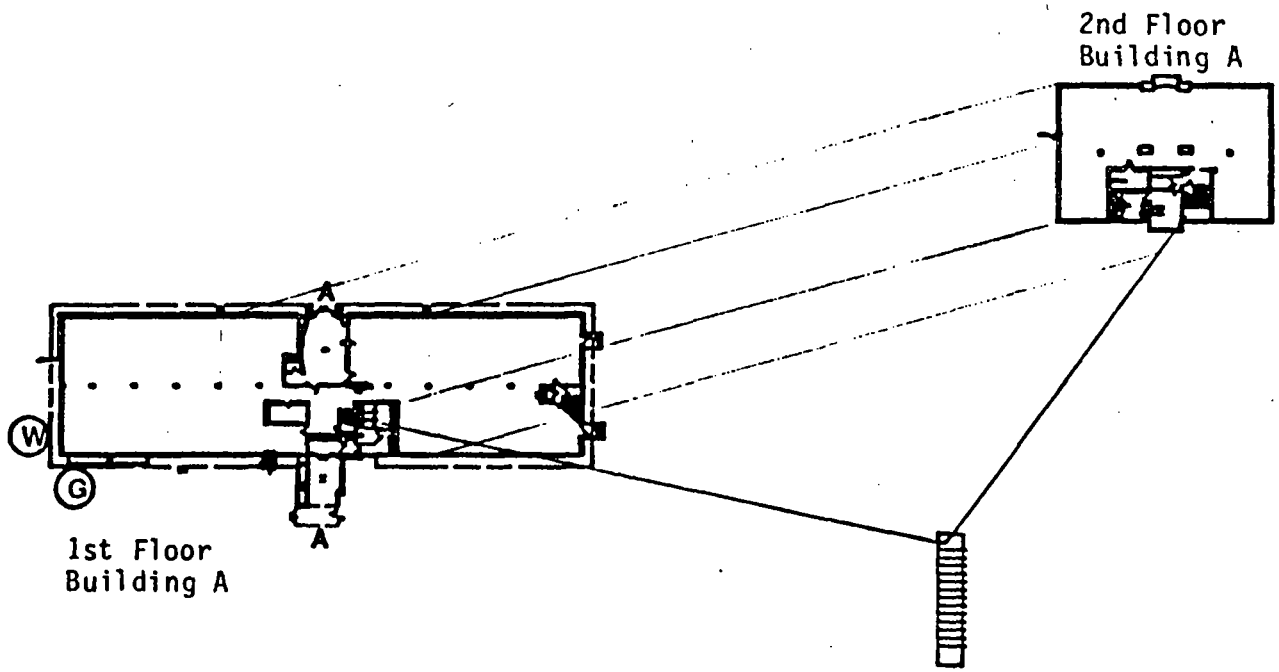

Business Name: Allied Signal Electrodynamics Div. LAFD Numbers: 026645-001-6 Emergency Phone: (818) 765-1015

Business Adress (Site Address): 11600 Sherman Way No. Hollywood, CA 91605-5887 Facility Unit: Building A

Main Business Activity: Aircraft Parts Manufacturing Scale of Map: 1 in = 64 ft Date: 2/1/91

(KEY TO SYMBOLS AND ABBREVIATIONS ON THE FRONT OF THIS FORM)

SITE MAP FOR BU ESS PLAN (BP-6)

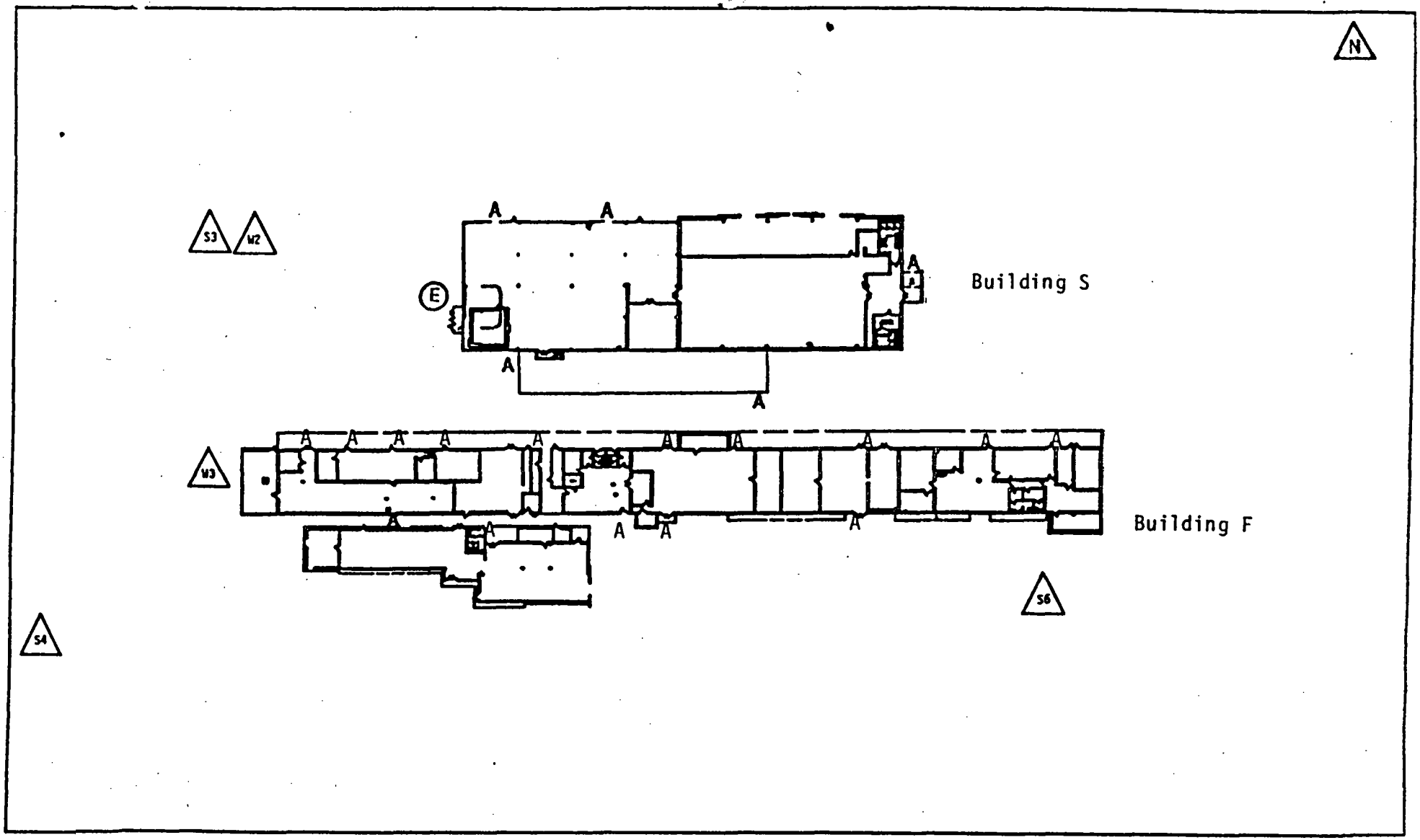

Business Name: Allied Signal Electrodynamics Div. LAFD Numbers: 026645-001-6 Emergency Phone: (818) 765-1015

Business Adress (Site Address): 11600 Sherman Way No. Hollywood, CA 91605-5887 Facility Unit: Buildings S & F

Main Business Activity: Aircraft Parts Manufacturing Scale of Map: 1 in = 64 ft Date: 2/1/91

(KEY TO SYMBOLS AND ABBREVIATIONS ON THE FRONT OF THIS FORM)

7

EMISSION INVENTORY PLAN

ALLIED-SIGNAL AEROSPACE COMPANY

Bendix Electrodynamics Division

Submitted to:

South Coast Air Quality Management District
9150 Flair Drive
El Monte, CA 91731

August 10, 1989

Submitted by:

Allied-Signal Aerospace Company
Bendix Electrodynamics Division
11600 Sherman Way
North Hollywood, CA 91605-5887

In Consultation With:

Dynamac Corporation
Westlake Village, California

041010

EMISSION INVENTORY PLAN
ALLIED-SIGNAL AEROSPACE COMPANY
Bendix Electrodynamics Division

Submitted to:

South Coast Air Quality Management District
9150 Flair Drive
El Monte, CA 91731

August 10, 1989

Submitted by:

Allied-Signal Aerospace Company
Bendix Electrodynamics Division
11600 Sherman Way
North Hollywood, CA 91605-5887

In Consultation With:

Dynamac Corporation
5701 Lindero Canyon Rd., Ste. 1-201
Westlake Village, CA 91362

TRADE SECRETS

Information claimed to be a trade secret is denoted by the use of a "black box" block on the flow diagram, which is labeled with the nonproprietary name(s) of the operation(s) therein. All devices and emitting processes within the "black box" are identified by name and by number. Fugitive emissions of listed substances located within the black box are indicated.

CONTENTS

	ABBREVIATIONS	v
	DEFINITIONS	vii
	PREFACE	ix
I.	INTRODUCTION AND SUMMARY	1
II.	GENERAL PROCESS DESCRIPTION	2
III.	FLOW DIAGRAMS AND QUANTIFICATION METHODS	
	A. HEAT TREATING AND PLATING	5
	B. HYDRAULIC ASSEMBLY	19
	C. SKYDROL AND ENGINEERING	24
	D. ELECTRONIC ASSEMBLY	27
IV.	REFERENCES	32

APPENDIX A-I. SUBSTANCES FOR WHICH EMISSIONS MUST BE QUANTIFIED

APPENDIX A-II. SUBSTANCES FOR WHICH PRODUCTION, USE, OR OTHER PRESENCE MUST BE REPORTED

ATTACHMENTS: EMISSION QUANTIFICATION METHODS SUMMARY FORM
MSDS
SUPPORT DOCUMENTS

ABBREVIATIONS

ABBREVIATIONS USED IN QUANTIFYING AIR RELEASES

MHE	Maximum Hourly Emissions
EF	(Substance) Emission Factor
AAE	Average Annual Emissions
HOP	Daily Hours of Operation
DOP	Days of Operation Per Year
%S	Mass of Substance To Be Quantified/Total Mass of Mixture
SQFT	Square Feet
CO	Additive Concentration (ppmw)
ppmw	parts per million by weight
EET	Emission Estimation Technique
MSDS	Material Safety Data Sheet
DO	Drift Fraction
WR	Water Flow
VOC	Volatile Organics
cfm or CFM	Cubic Feet per Minute
gr	Grains

ADDITIONAL ABBREVIATIONS AND ACRONYMS

CAS No.	Chemical Abstract Service Number
ARB	Air Resources Board
CARB	California Air Resources Board
AQMD	Air Quality Management District
APCD	Air Pollution Control District
AB2588	Assembly Bill 2588
SCM	Standard Cubic Meters
M/S	Meters Per Second

DEFINITIONS

Air emission (Also referred to as "air release," "emission," or "release") - Any activity that may cause the issuance of air contaminants or disposing of a substance in the ambient air.

Device - Any article, machine, equipment, or other contrivance (whether or not operated under a permit from an air pollution control district or air quality management district) that may cause the emission of a listed substance.

Emission Inventory Plan (Also referred to as "inventory plan" or "plan") - The emission inventory plan required by Health and Safety Code Sections 44340 and 44342.

Emitting process - Any fugitive source or any operation within a device that involves the manufacture, formulation, use, or release of one or more of the listed substances, when the substance is present in any capacity whatsoever, including but not limited to an ingredient, product, auxiliary, or catalyst.

Fugitive emissions - Those emissions that do not pass through a stack, chimney, vent, or other functionally equivalent opening.

List of substances - The list of chemical substances that may pose a threat to public health when present in the ambient air as set forth in Appendix A of Title 17 of the California Code of Regulations, Sections 90700-70704, and in Appendices A-I and A-II of this regulation.

Material Safety Data Sheet (MSDS) - Printed material concerning a hazardous substance that is prepared by manufacturers and importers in accordance with Section 5194(g) of Title 8, California Code of Regulations, "Hazard Communication."

Source or point of release - Location of a facility activity, device, or emitting process, including locations of fugitive emissions, that may be associated with air emissions of a listed substance or other air pollutant; or the location of any substance that may be associated with emissions of a listed substance or other air pollutant.

PREFACE

California concerns over toxic air pollutants beyond the criteria pollutants that are currently regulated have resulted in legislation that is intended to define and measure the magnitude of the air toxics problem. The Air Toxics "Hot Spots" Information and Assessment Act of 1987 (introduced as Assembly Bill 2588 and approved by the Governor of California on September 27, 1987) requires operators of facilities that emit listed air toxics or criteria pollutants in excess of specified amounts to prepare and submit to the Air Quality Management District an emission inventory plan for identifying and quantifying the toxic emissions from the facility. It further requires the implementation of the inventory plan and reporting thereon to the district. It also provides for preparation and submittal of health risk assessments by operators of high-priority category facilities and directs the State Board to utilize the reports and health risk assessments for the purposes of identifying and controlling toxic air contaminants.

Specific authority for this regulation is found in sections 39600, 39601, and 44342 of the California Health and Safety Code. The emission inventory plans required of certain operators are delineated in sections 44340 and 44342 of the Health and Safety Code.

I. INTRODUCTION AND SUMMARY

This document presents the Emission Inventory Plan for the Bendix Electrodynamics Division of Allied-Signal Aerospace Company, a manufacturing and testing facility in North Hollywood, California. The plan is being submitted to the South Coast Air Quality Management District to comply with Health and Safety Code Sections 44340 and 44342.

This Emission Inventory Plan identifies the devices and processes that are sources of toxic emissions at the facility and presents flow diagrams displaying the devices and toxic emittents for each process. The plan further identifies the estimation technique that will be used to quantify each toxic substance released. Also, test protocols are developed for each source where source testing is required.

This plan is presented as follows:

Chapter I, Introduction and Summary, provides an overview of the contents of the plan.

Chapter II, General Process Description, defines the basic work that the facility performs.

Chapter III, Processes and Quantification Methods, comprises the bulk of this plan. A summary table is presented first, to provide the reader with a quick reference to the substances emitted. Then each of the processes is described followed by all of the devices used in that process, the method of quantification to be used, and accompanying flow diagrams for each device.

Chapter IV, References, provides a list of publications used to quantify the emissions.

II. GENERAL PROCESS DESCRIPTION

The Bendix Electrodynamics Division of Allied-Signal manufactures and tests hydraulic actuators for use in the aerospace industry.

III. FLOW DIAGRAMS AND QUANTIFICATION METHODS

Four general processes at this facility involve air emissions: Heat Treating and Plating (Section A), Hydraulic Assembly (Section B), Skydrol and Engineering (Section C), and Electronic Assembly (Section D). These processes involve several devices to meet the job requirements. Each section in this chapter includes flow diagrams that identify the air emittents from these devices followed by the method of quantification to be used for each.

The table on the following page summarizes the stack and fugitive emissions from the facility, including the CAS or ID Numbers of each substance, and identifies the devices from which they are emitted.

STACK AND FUGITIVE SOURCE EMISSIONS FROM THE ALLIED-SIGNAL COMPANY, NORTH HOLLYWOOD, CALIFORNIA

Substance Emitted	CAS/ID No.	Device ID No.*
Chromium	18540299	1, 2, 3, 4, 5, 6
Hydrochloric Acid	7647010	7
Copper	7440508	8
Methyl Chloroform	71556	9, 15, 16, 19, 21
Fluorocarbons	1105	10, 14, 18, 19
Silica	1175	11
Chlorine	7782505	12, 17
Benzene	71432	13
Formaldehyde	50000	13
Toluene	108883	13, 20
Lead	7439921	22
Cadmium	7440439	23

* Device ID Nos. 1-12, 23 (Heat Treating and Plating)
Nos. 13-16 (Hydraulic Assembly)
Nos. 17-18 (Skydrol and Engineering)
Nos. 19-22 (Electronic Assembly)

PROCESS

A. HEAT TREATING AND PLATING

Process Description: The plating shop consists of (1) tanks for plating Chrome and Copper, and (2) related acid and other process tanks. Heat-treating emissions include degreasing and cooling towers.

DEVICES USED IN THIS PROCESS

ID No.	Name
1	Chrome Plating Tanks (3)
2	Chrome Plating Tank
3	Chrome Conversion
4	Chrome Strip
5	Chrome Conversion (Douglas)
6	Chromic Acid Neutralization
7	HCl Tank
8	Copper Plate
9	Degreaser
10	Vapor Degreaser
11	Glass Bead Blast
12	Cooling Towers (2)
23	Cadmium Plating*

* Included on Flow Diagram with Devices 1 and 2 (on following page).

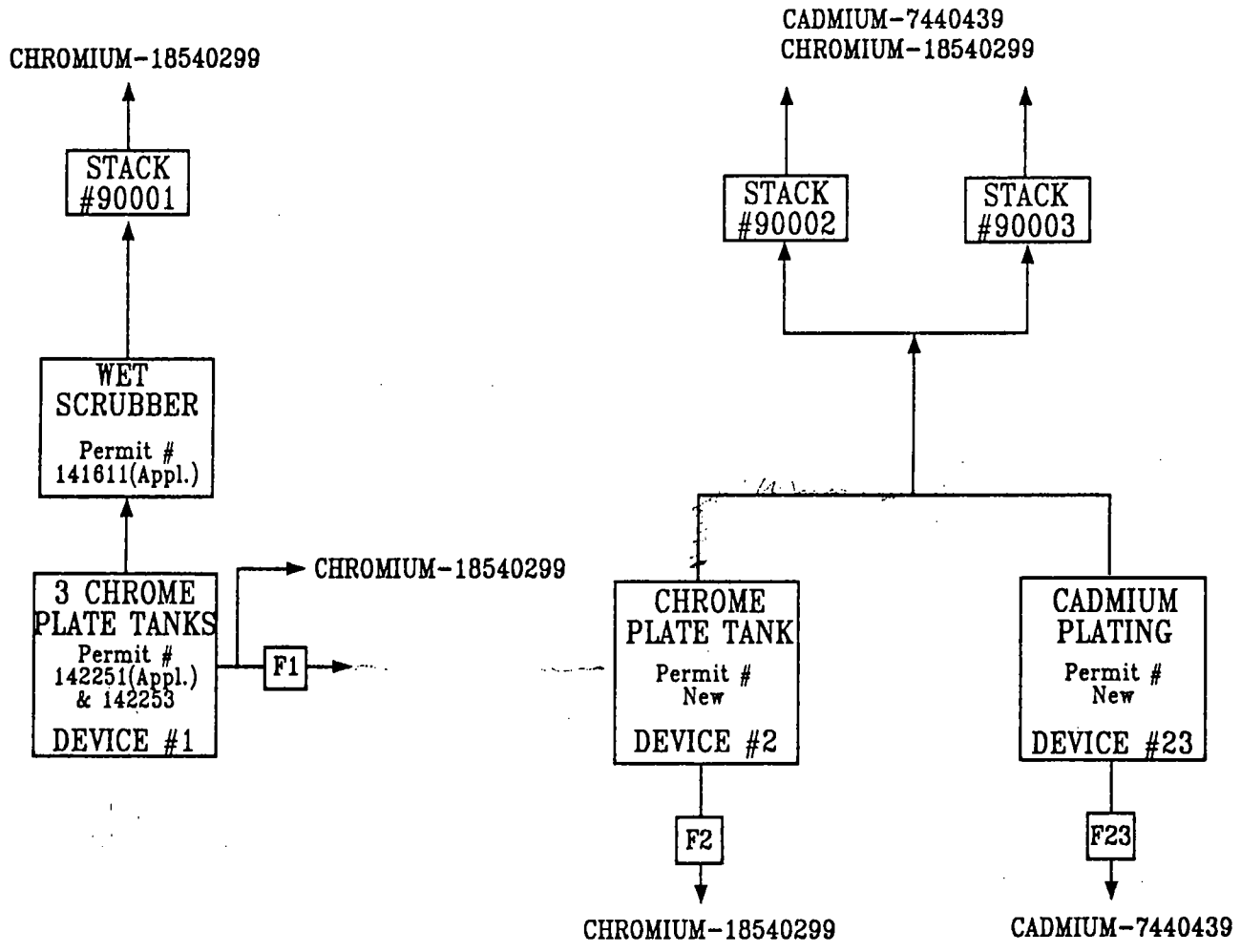

ALLIED SIGNAL	
Operation HEAT TREAT/PLATING	Date 7/89
Prepared by DYNAMAC CORPORATION	

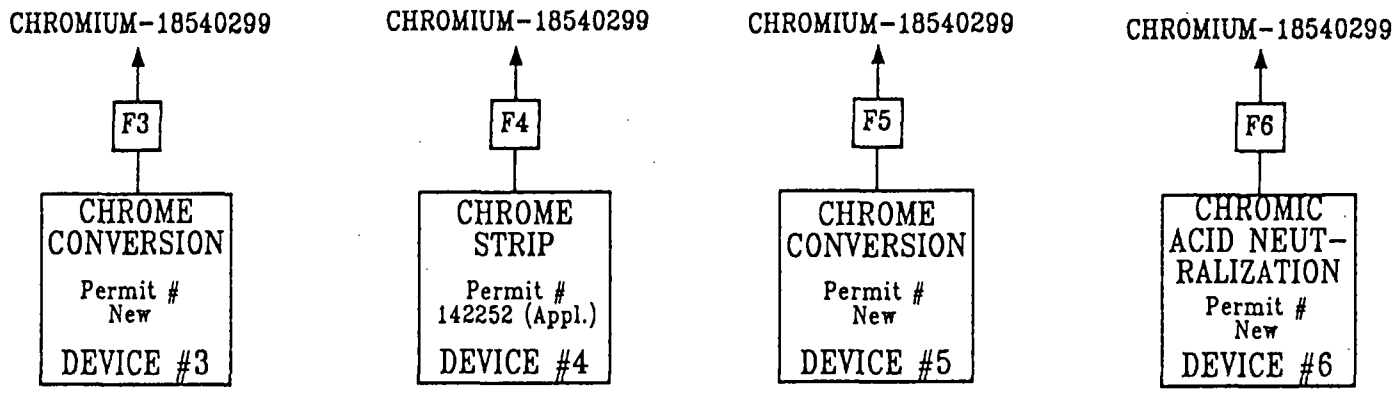

ALLIED SIGNAL	
Operation HEAT TREAT/PLATING	Date 7/89
Prepared by DYNAMAC CORPORATION	

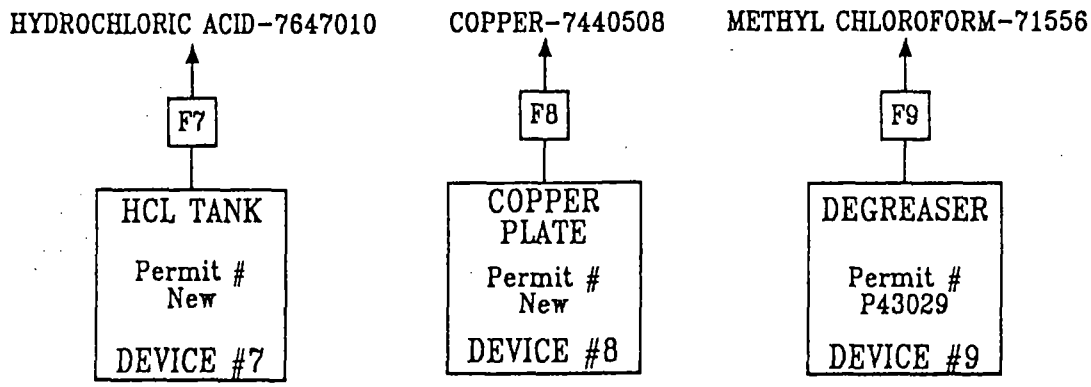

ALLIED SIGNAL	
Operation HEAT TREAT/PLATING	Date 7/89
Prepared by DYNAMAC CORPORATION	

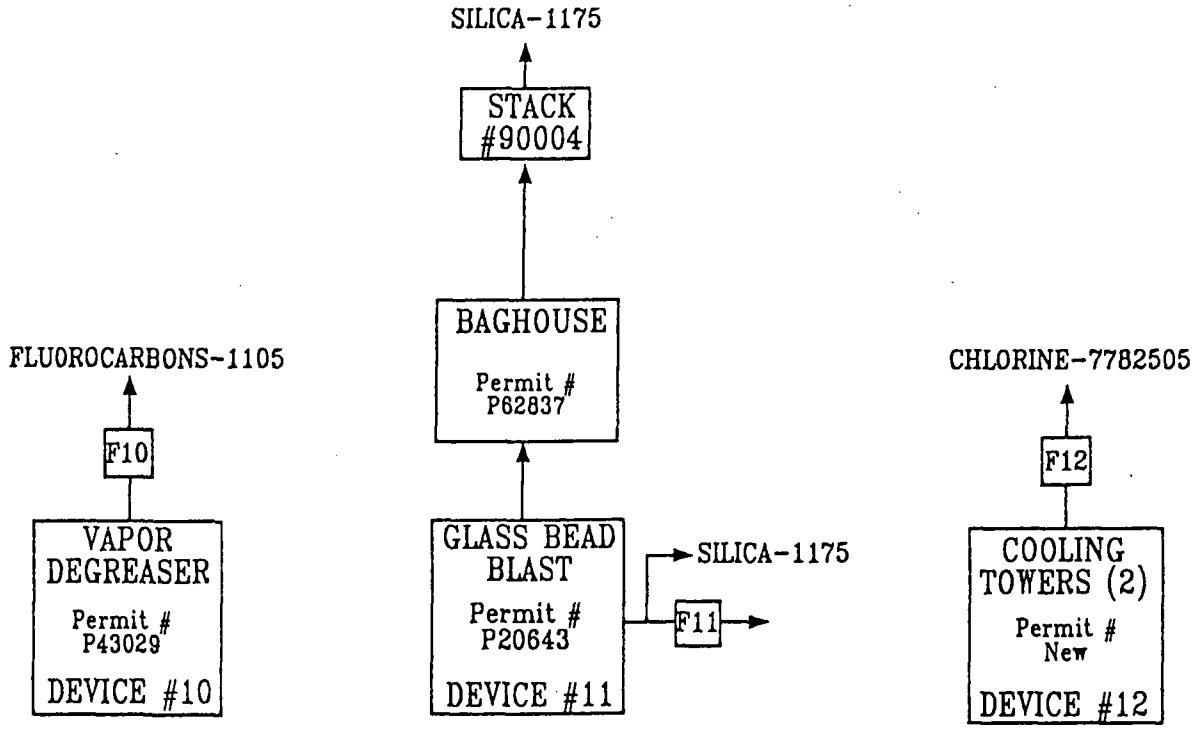

ALLIED SIGNAL	
Operation HEAT TREAT/PLATING	Date 7/89
Prepared by DYNAMAC CORPORATION	

DEVICE NAME: CHROME PLATING TANKS (3)

Device ID: 1

Permit ID: 142251, 142253 (applied for)

Control Equipment Code: 001

Control Type: Wet Scrubber

Control Permit ID: 141611 (applied for)

Stack ID: 90001

Substance Emitted & CAS No.: Chromium 18540299

Quantification Method: EPA Emission Factor (Ref. 1)

EF = 0.0106 lb/hr/amp

MHE = EF x amp usage

AAE = MHE x DOP x HOP

313305 4 mos

1253220 ppm/yr

DEVICE NAME: CHROME PLATING TANK

Device ID: 2

Permit ID: New

Control Equipment Code: N/A

Control Type: N/A

Control Permit ID:

Stack ID: 90002, 90003

Substance Emitted & CAS No.: Chromium 18540299

Quantification Method: EPA Emission Factor (Ref. 1)

EF = 0.0106 lb/hr/amp

MHE = EF x amp usage

AAE = MHE x DOP x HOP

142961 4 mos

57 1844 per YR

amp

DEVICE NAME: CADMIUM PLATING

Device ID: 23

Permit ID: New

Control Equipment Code: 000

Control Type: N/A

Control Permit ID: N/A

Stack ID: 90002, 90003

Substance Emitted & CAS No.: Cadmium 7440439

Quantification Method: EPA Emission Factor (Ref. 1)

EF = 0.023 lb/hr/amp

MHE = EF x amp usage

AAE = MHE x HOP x DOP

300 days yr 4 hr day.

24 amps hr 12 hr 288,000 yr.

DEVICE NAME: CHROME CONVERSION

Device ID: 3

Permit ID: New

Control Equipment Code: N/A

Control Type: N/A

Control Permit ID: N/A

Stack ID: N/A

Substance Emitted & CAS No.: Chromium 18540299

Quantification Method: The EPA Emission Factor (Ref. 1) for chromic acid anodizing will be used to calculate the emissions of Chromium.

EF = 0.0019 lb/hr/ft^2

MHE = EF x SQFT - 14"x30"
L W

AAE = MHE x DOP x HOP

DEVICE NAME: CHROME STRIP

Device ID: 4

Permit ID: 142252 (applied for)

Control Equipment Code: N/A

Control Type: N/A

Control Permit ID: N/A

Stack ID: N/A

Substance Emitted & CAS No.: Chromium 18540299

Quantification Method: The EPA Emission Factor (Ref. 1) for chromic acid anodizing will be used to calculate the emissions of Chromium.

EF = 0.0019 lb/hr/ft^2

MHE = EF x SQFT 48x36

AAE = MHE x DOP x HOP

DEVICE NAME: CHROME CONVERSION (Douglas)

Device ID: 5

Permit ID: New

Control Equipment Code: N/A

Control Type: N/A

Control Permit ID: N/A

Stack ID: N/A

Substance Emitted & CAS No.: Chromium 18540299

Quantification Method: The EPA Emission Factor (Ref. 1) for chromic acid anodizing will be used to calculate the emissions of Chromium.

EF = 0.0019 lb/hr/ft^2

MHE = EF x SQFT 48x36

AAE = MHE x DOP x HOP

DEVICE NAME: CHROMIC ACID NEUTRALIZATION

Device ID: 6

Permit ID: New

Control Equipment Code: N/A

Control Type: N/A

Control Permit ID: N/A

Stack ID: N/A

Substance Emitted & CAS No.: Chromium 18540299

Quantification Method: The EPA Emission Factor (Ref. 1) for chromic acid anodizing will be used to calculate the emissions of Chromium.

EF = 0.0019 lb/hr/ft^2

MHE = EF x SQFT 60X36

AAE = MHE x DOP x HOP

DEVICE NAME: HYDROCHLORIC ACID TANK

Device ID: 7

Permit ID: New

Control Equipment Code: N/A

Control Type: N/A

Control Permit ID: N/A

Stack ID: N/A

Substance Emitted & CAS No.: Hydrochloric Acid 7647010

Quantification Method: An evaporation rate for heated tanks of Hydrochloric Acid was derived using empirical data based on the partial pressure of HCl over aqueous solutions.

$$MHE = (P_{HCl})(Q)/(760)(H_{fg})$$

Where:

P_{HCl} = Partial Pressure of HCl Over Aqueous Solutions (Ref. 4, Table 3-11)

Q = Heat Input to Tank in BTU/Hr

H_{fg} = Heat of Vaporation from Steam Table

AAE = MHE x DOP x HOP

Example:

Tank at 90° F 10% HCl with 500,000 BTU/Hr Burner

$$X_{HCl} = \frac{(0.014)\ 500{,}000\ \text{BTU lb}}{(760)\ 1100\ \text{BTU/Hr}} = 0.00837\ \text{lb/hr}$$

DEVICE NAME: COPPER PLATING

Device ID: 8
Permit ID: New
Control Equipment Code: N/A
Control Type: N/A
Control Permit ID: N/A
Stack ID: N/A

Substance Emitted & CAS No.: Copper 7440508

Quantification Method: The EPA Emission Factor (Ref. 1) for Chromic Acid anodizing will be adjusted for Copper plating based on a ratio of molecular weights. The same mechanism for entraining droplets of copper is present as in chrome anodizing.

$EF_{Chromium} = 0.0019\ lb/hr/ft^2$

$MHE = EF_{Chromium} \times Tank\ Area \times (MW_{Copper} / MW_{Chromium})$

$AAE = MHE \times HOP \times DOP$

$MW_{Copper} = 63.546$

$MW_{Chromium} = 51.996$

DEVICE NAME: DEGREASER

Device ID: 9

Permit ID: P 43029

Control Equipment Code: N/A

Control Type: N/A

Control Permit ID: N/A

Stack ID: N/A

Substance Emitted & CAS No.: Methyl Chloroform 71556

Quantification Method: Mass Balance Principles will be applied to determine the emissions. Records of the amount of degreaser purchased and the amount recycled will be used to determine the amount evaporated.

AAE = %S x (solvent purchased/yr - solvent recycled/yr)

MHE = AAE/(DOP x HOP)

DEVICE NAME: ULTRASONIC VAPOR DEGREASER

Device ID: 10

Permit ID: M 60720

Control Equipment Code: N/A

Control Type: N/A

Control Permit ID: N/A

Stack ID: N/A

Substance Emitted & CAS No.: Fluorocarbons 1105

Quantification Method: Mass Balance Principles will be applied to determine the emissions. Records of the amount of degreaser purchased and the amount recycled will be used to determine the amount evaporated.

AAE = %S x (solvent purchased/yr - solvent recycled/yr)

MHE = AAE/(DOP x HOP)

DEVICE NAME: GLASS BEAD BLAST

Device ID: 11

Permit ID: P 20643

Control Equipment Code: 012

Control Type: Baghouse

Control Permit ID: P 62837

Stack ID: 90004

Substance Emitted & CAS No.: Silica 1175

Quantification Method: Engineering judgment based on the size of the grit suggests that <1% of the grit is vented to the atmosphere. The grit-blast area is enclosed.

MHE = Hourly Usage x 0.01

AAE = Annual Usage x 0.01

DEVICE NAME: COOLING TOWERS (2)

Device ID: 12

Permit ID:

Control Equipment Code: N/A

Control Type: N/A

Control Permit ID: N/A

Stack ID:

Substance Emitted & CAS No.: Chlorine 7782505

Quantification Method: ARB Method (Ref. 4)

MHE = DO x WR x CO x 8.33 x 60

AAE = MHE x HOP x DOP

Where: DO = Drift Fraction

WR = Water Flow (gpm)

CO = Chlorine Concentration (ppmw)

PROCESS

B. HYDRAULIC ASSEMBLY

Process Description: Hydraulic parts are assembled and tested in this process. Emission sources include solvents from painting operations and degreasing and volatile organics from natural gas burning.

DEVICES USED IN THIS PROCESS

ID No.	Name
13	Paint Bake Oven
14	Paint Spray Booth
15	Degreaser
16	Parts Cleaner

DEVICE NAME: PAINT BAKING OVEN

Device ID: 13

Permit ID: P 05144

Control Equipment Code: N/A

Control Type: N/A

Control Permit ID: N/A

Stack ID: N/A

Substance Emitted & CAS No.:	Benzene	71432
	Formaldehyde	50000
	Toluene	108883

Quantification Method: Emission of volatile organic compounds in natural gas fired burners are calculated based on EPA emission factors (Ref. 2). The emissions of the substances to be quantified are based on the percent of the substance in the total VOC emissions (Ref. 3).

VOC EF: 5.8 $lb/10^6 ft^3$

Benzene 4%

Toluene 2%

Formaldehyde 8%

MHE = Max Hourly Fuel Usage x VOC EF x %S

AAE = Monthly Fuel Usage x VOC EF x %S x 12

DEVICE NAME: PAINT SPRAY BOOTH

Device ID: 14

Permit ID: P 36679

Control Equipment Code: N/A

Control Type: N/A

Control Permit ID: N/A

Stack ID: 90005

Substance Emitted & CAS No.: Fluorocarbons 1105
(Trichlorotrifluoroethane)

Quantification Method: Mass Balance Principles will be used assuming all of the volatile organics in the paint will be evaporated into the atmosphere.

MHE = %S x Max Hourly Usage

AAE = %S x Yearly Usage

DEVICE NAME: DEGREASER

Device ID: 15

Permit ID: M 51995

Control Equipment Code: N/A

Control Type: N/A

Control Permit ID: N/A

Stack ID: N/A

Substance Emitted & CAS No.: Methyl Chloroform 71556

Quantification Method: Mass Balance Principles will be applied to determine the emissions. Records of the amount of degreaser purchased and the amount recycled will be used to determine the amount evaporated.

AAE = %S x (solvent purchased/yr - solvent recycled/yr)

MHE = AAE/(DOP x HOP)

DEVICE NAME: PARTS CLEANER

Device ID: 16

Permit ID: New

Control Equipment Code: N/A

Control Type: N/A

Control Permit ID: N/A

Stack ID:

Substance Emitted & CAS No.: Methyl Chloroform 71556

Quantification Method: Mass Balance Principles will be applied to determine the emissions. Records of the amount of degreaser purchased and the amount recycled will be used to determine the amount evaporated.

AAE = %S x (solvent purchased/yr - solvent recycled/yr)

MHE = AAE/(DOP x HOP)

PROCESS

C. SKYDROL AND ENGINEERING

Process Description: The engineering lab is involved in material process development.

DEVICES USED IN THIS PROCESS

ID No.	Name
17	Cooling Towers (6)
18	Engineering Lab

DEVICE NAME: COOLING TOWERS (6)

Device ID: 17

Permit ID: New

Control Equipment Code: N/A

Control Type: None

Control Permit ID: N/A

Stack ID: N/A

Substance Emitted & CAS No.: Chlorine 7782505

Quantification Method: ARB Method (Ref. 5)

MHE = DO x WR x CO x 8.33 x 60

AAE = MHE x HOP x DOP

Where: DO = Drift Fraction

WR = Water Flow (gpm)

CO = Chlorine Concentration (ppmw)

DEVICE NAME: ENGINEERING LAB

Device ID: 18

Permit ID: New

Control Equipment Code: N/A

Control Type: N/A

Control Permit ID: N/A

Stack ID: N/A

Substance Emitted & CAS No.: Fluorocarbons 1105

Quantification Method: Mass Balance Principles will be used assuming all volatile organic material in the solvent will be evaporated into the atmosphere.

MHE = %S x Max Hourly Usage

AAE = %S x Yearly Usage

PROCESS

D. ELECTRONIC ASSEMBLY

Process Description: Electronic parts are assembled and tested in this operation.

DEVICES USED IN THIS PROCESS

ID No.	Name
19	Degreaser
20	Spray Booth
21	Degreaser
22	Flow Solder & Solder Pots

DEVICE NAME: DEGREASER

Device ID: 19

Permit ID: New

Control Equipment Code: N/A

Control Type: N/A

Control Permit ID: N/A

Vent ID: 90006

Substance Emitted & CAS No.:	Methyl Chloroform	71556
	Fluorocarbons	1105

Quantification Method: Mass Balance Principles will be applied to determine the emissions. Records of the amount of degreaser purchased and the amount recycled will be used to determine the amount evaporated.

AAE = %S x (solvent purchased/yr - solvent recycled/yr)

MHE = AAE/(DOP x HOP)

DEVICE NAME: SPRAY BOOTH

Device ID: 20

Permit ID: M 42415

Control Equipment Code: N/A

Control Type: N/A

Control Permit ID: N/A

Vent ID: 90007

Substance Emitted & CAS No.: Toluene 108883

Quantification Method: Mass Balance Principles will be applied to determine the emissions. Records of the amount of degreaser purchased and the amount recycled will be used to determine the amount evaporated.

AAE = %S x (solvent purchased/yr - solvent recycled/yr)

MHE = AAE/(DOP x HOP)

DEVICE NAME: DEGREASER

Device ID: 21

Permit ID: M 60608

Control Equipment Code: N/A

Control Type: N/A

Control Permit ID: N/A

Vent ID: N/A

Substance Emitted & CAS No.: Methyl Chloroform 71556

Quantification Method: Mass Balance Principles will be applied to determine the emissions. Records of the amount of degreaser purchased and the amount recycled will be used to determine the amount evaporated.

AAE = %S x (solvent purchased/yr - solvent recycled/yr)

MHE = AAE/(DOP x HOP)

DEVICE NAME: FLOW SOLDER & SOLDER POTS

Device ID: 22
Permit ID: New
Control Equipment Code: N/A
Control Type: N/A
Control Permit ID: N/A
Vent ID: 90008, 90009
Substance Emitted & CAS No.: Lead 7439921

Quantification Method: Two tin-lead solder pots contain melted solder for dipping purposes. The lead emissions will be calculated using the EPA emission factor (Ref. 1) for kettle refining in the secondary lead processing industry. Since the emission factor is only 0.2 lb/ton of material processed and tin-lead solder contains only 30% Lead, it is not expected that the solder pots will emit an appreciable quantity of lead.

AAE = %S x EF x yearly Usage
MHE = AAE/(HOP x DOP)

REFERENCES

1. U.S. EPA, 1988. Toxic Air Pollutant Emission Factors, EPA 450/2-88-006a. Research Triangle Park, NC: U.S. EPA, Office of Air Quality Planning and Standards.

2. U.S. EPA, 1985. Compilation of Air Pollutant Emission Factors, Vol. 1. Stationary Point and the Area Sources, 4th edition. PB 86-124906. Research Triangle Park, NC: U.S. EPA, Office of Air Quality Planning and Standards.

3. U.S. EPA, 1988. Air Emissions Species Manual, Vol. I: Volatile Organic Compound (VOC) Species Profile. EPA-450/2-88-003a. PB 88-225792. Research Triangle Park, NC: U.S. EPA, Office of Air Quality Planning and Standards.

4. Perry, Robert H., 1984. Perry's Chemical Engineer's Handbook, Sixth Edition. Don W. Green (ed.). New York: R.R. Donnelley & Sons Company.

5. Air Resources Board, 1989. Emission Inventory Criteria and Guideline Regulation. Sacramento, CA: ARB, Technical Support Division.

APPENDIX A-I.

Allied Signal

APPENDIX A-I

Substances For Which Emissions Must Be Quantified 5/15/89

Plant Number 11217 Date 8/3/89 Name of Person Completing This Form Margaret Berry

CAS Number	Substance Name	Use	Produce	Otherwise Present	Not Present at Facility	Applicable Degree of Accuracy
		Yes	Yes	Yes	No	lb per yr
75070	Acetaldehyde	( )	( )	( )	(X)	100
60355	Acetamide	( )	( )	( )	(X)	100
107028	Acrolein	( )	( )	( )	(X)	10
79061	Acrylamide	( )	( )	( )	(X)	100
107131	Acrylonitrile	( )	( )	( )	(X)	100
107051	Allyl chloride	( )	( )	( )	(X)	100
117793	2-Aminoanthraquinone	( )	( )	( )	(X)	100
61825	Amitrole	( )	( )	( )	(X)	100
7664417	Ammonia	( )	( )	( )	(X)	100
7440382	Arsenic	( )	( )	( )	(X)	1
*	Arsenic compounds (inorganic)	( )	( )	( )	(X)	1
7784421	Arsine	( )	( )	( )	(X)	10
1332214	Asbestos	( )	( )	( )	(X)	100
71432	Benzene	( )	(X)	( )	( )	10
92875	Benzidine (and its salts)	( )	( )	( )	(X)	10
-	Benzidine-based dyes	( )	( )	( )	(X)	10
56533	Benz[a]anthracene	( )	( )	( )	(X)	100
205992	Benzo[b]fluoranthene	( )	( )	( )	(X)	100
207089	Benzo[k]fluoranthene	( )	( )	( )	(X)	100
50328	Benzo[a]pyrene	( )	( )	( )	(X)	1
100447	Benzyl chloride	( )	( )	( )	(X)	10
7440417	Beryllium	( )	( )	( )	(X)	1
542881	Bis(chloromethyl)ether	( )	( )	( )	(X)	10
7726956	Bromine	( )	( )	( )	(X)	100
*	Bromine compounds (inorganic)	( )	( )	( )	(X)	100
106990	1,3-Butadiene	( )	( )	( )	(X)	10
7440439	Cadmium	(X)	( )	( )	( )	1
*	Cadmium compounds	( )	( )	( )	(X)	1
-	Carbon black extracts	( )	( )	( )	(X)	100
56235	Carbon tetrachloride	( )	( )	( )	(X)	10
-	Carrageenan (degraded)	( )	( )	( )	(X)	100
76131	Chlorinated flouracarbon (CFC-113)	( )	( )	( )	(X)	100
7782505	Chlorine	(X)	( )	( )	( )	10
56757	Chloramphenicol	( )	( )	( )	(X)	100
108907	Chlorobenzene	( )	( )	( )	(X)	100
13909096	1-(2-chloroethyl)-3-(4-methylcyclohexyl)-	( )	( )	( )	(X)	100
	1-nitrosourea (Methyl CCNU)	( )	( )	( )	(X)	100
67663	Chloroform	( )	( )	( )	(X)	10
*	Chlorophenols	( )	( )	( )	(X)	100
76062	Chloropicrin	( )	( )	( )	(X)	10

If the Otherwise Present category is checked "Yes", please list that substance and specify the nature of the substance's presence in the space provided below. Attach additional sheets if necessary. _____

APPENDIX A-I

Substances For Which Emissions Must Be Quantified 5/15/89

Plant Number 11217 Date 8/3/89 Name of Person Completing This Form Margaret Berry

CAS Number	Substance Name	Use	Produce	Otherwise Present	Not Present at Facility	Applicable Degree of Accuracy
		Yes	Yes	Yes	No	lb per yr
126998	Chloroprene	( )	( )	( )	(X)	100
95830	4-Chloro-o-phenylenediamine	( )	( )	( )	(X)	100
95692	p-Chloro-o-toluidine	( )	( )	( )	(X)	100
18540299	Chromium (hexavalent)	(X)	( )	( )	( )	0.1
8007452	Coke oven emissions	( )	( )	( )	(X)	100
7440508	Copper	(X)	( )	( )	( )	100
-	Creosotes	( )	( )	( )	(X)	100
120718	p-Cresidine	( )	( )	( )	(X)	100
1319773	Cresols	( )	( )	( )	(X)	100
135206	Cupferron	( )	( )	( )	(X)	100
66819	Cycloheximide	( )	( )	( )	(X)	100
*	Dialkylnitrosamines	( )	( )	( )	(X)	100
615054	2,4-Diaminoanisole	( )	( )	( )	(X)	100
95807	2,4-Diaminotoluene	( )	( )	( )	(X)	100
53703	Dibenz[a,h]anthracene	( )	( )	( )	(X)	100
*	Dibenzofurans (chlorinated)	( )	( )	( )	(X)	0.1
96128	1,2-Dibromo-3-chloropropane (DBCP)	( )	( )	( )	(X)	100
106467	p-Dichlorobenzene (1,4-Dichlorobenzene)	( )	( )	( )	(X)	100
91941	3,3'-Dichlorobenzidine	( )	( )	( )	(X)	10
117817	Di(2-ethylhexyl) phthalate (DEHP)	( )	( )	( )	(X)	100
124403	Dimethylamine	( )	( )	( )	(X)	100
60117	p-Dimethylaminoazobenzene	( )	( )	( )	(X)	100
57147	1,1-Dimethylhydrazine	( )	( )	( )	(X)	100
77781	Dimethyl sulfate	( )	( )	( )	(X)	100
123911	1,4-Dioxane	( )	( )	( )	(X)	100
-	Dioxins (chlorinated dibenzodioxins)	( )	( )	( )	(X)	0.1
	Environmemtal tobacco smoke	( )	( )	( )	(X)	100
106898	Epichlorohydrin	( )	( )	( )	(X)	100
140885	Ethyl acrylate	( )	( )	( )	(X)	100
75003	Ethyl chloride	( )	( )	( )	(X)	100
106934	Ethylene dibromide (1,2-Dibromoethane)	( )	( )	( )	(X)	1
107062	Ethylene dichloride (1,2-Dichloroethane)	( )	( )	( )	(X)	10
75218	Ethylene oxide	( )	( )	( )	(X)	10
96457	Ethylene thiourea	( )	( )	( )	(X)	100
*	Fluorocarbons (chlorinated & brominated)	(X)	( )	( )	( )	100
50000	Formaldehyde	( )	(X)	( )	( )	100
-	Gasoline vapors	( )	( )	( )	(X)	100
111308	Glutaraldehyde	( )	( )	( )	(X)	100
*	Glycol ethers	( )	( )	( )	(X)	100
126078	Griseofulvin	( )	( )	( )	(X)	100

If the Otherwise Present category is checked "Yes", please list that substance and specify the nature of the substance's presence in the space provided below. Attach additional sheets if necessary.

APPENDIX A-I

Substances For Which Emissions Must Be Quantified 5/15/89

Plant Number 11217 Date 8/3/89 Name of Person Completing This Form Margaret Berry

CAS Number	Substance Name	Use	Produce	Otherwise Present	Not Present at Facility	Applicable Degree of Accuracy
		Yes	Yes	Yes	No	lb per yr
118741	Hexachlorobenzene	( )	( )	( )	(X)	1
*	Hexachlorocyclohexanes	( )	( )	( )	(X)	1
77474	Hexachlorocyclopentadiene	( )	( )	( )	(X)	100
302012	Hydrazine	( )	( )	( )	(X)	100
7647010	Hydrochloric acid	(X)	( )	( )	( )	100
74908	Hydrocyanic acid	( )	( )	( )	(X)	10
7664393	Hydrogen fluoride	( )	( )	( )	(X)	10
7783064	Hydrogen sulfide	( )	( )	( )	(X)	100
193395	Indeno[1,2,3,-cd]pyrene	( )	( )	( )	(X)	100
*	Isocyanates	( )	( )	( )	(X)	100
7439921	Lead	(X)	( )	( )	( )	10
*	Lead compounds (inorganic)	( )	( )	( )	(X)	10
108316	Maleic anhydride	( )	( )	( )	(X)	100
7439965	Manganese	( )	( )	( )	(X)	100
7487947	Mercuric chloride	( )	( )	( )	(X)	10
7439976	Mercury	( )	( )	( )	(X)	10
67561	Methanol	( )	( )	( )	(X)	100
74839	Methyl bromide (Bromomethane)	( )	( )	( )	(X)	100
71556	Methyl chloroform (1,1,1-Trichloroethane)	(X)	( )	( )	( )	100
624839	Methyl isocyanate	( )	( )	( )	(X)	100
80626	Methyl methacrylate	( )	( )	( )	(X)	100
101144	4,4'-Methylene bis(2-chloroaniline) (MOCA)	( )	( )	( )	(X)	100
75092	Methylene chloride (Dichloromethane)	( )	( )	( )	(X)	100
101779	4,4'-Methylene dianiline (and its dichloride)	( )	( )	( )	(X)	100
593748	Methyl mercury (Dimethylmercury)	( )	( )	( )	(X)	10
443481	Metronidazole	( )	( )	( )	(X)	100
90948	Michler's ketone	( )	( )	( )	(X)	100
-	Mineral fibers	( )	( )	( )	(X)	100
91203	Naphthalene	( )	( )	( )	(X)	100
7440020	Nickel	( )	( )	( )	(X)	1
13463393	Nickel carbonyl	( )	( )	( )	(X)	1
12035722	Nickel subsulfide	( )	( )	( )	(X)	1
61574	Niridazole	( )	( )	( )	(X)	100
98953	Nitrobenzene	( )	( )	( )	(X)	100
302705	Nitrogen mustard N-oxide	( )	( )	( )	(X)	100
79469	2-Nitropropane	( )	( )	( )	(X)	100
55185	N-Nitrosodiethylamine	( )	( )	( )	(X)	1
62759	N-Nitrosodimethylamine	( )	( )	( )	(X)	1
156105	p-Nitrosodiphenylamine	( )	( )	( )	(X)	100
924163	N-Nitrosodi-n-butylamine	( )	( )	( )	(X)	1

If the Otherwise Present category is checked "Yes", please list that substance and specify the nature of the substance's presence in the space provided below. Attach additional sheets if necessary. _____

APPENDIX A-I

Substances for Which Emissions Must Be Quantified 5/15/89

Plant Number 11217 Date 8/3/89 Name of Person Completing This Form Margaret Berry

CAS Number	Substance Name	Use	Produce	Otherwise Present	Not Present at Facility	Applicable Degree of Accuracy
		Yes	Yes	Yes	No	lb per yr
621647	N-Nitrosodi-n-propylamine	( )	( )	( )	(X)	100
10595956	N-Nitrosomethylethylamine	( )	( )	( )	(X)	100
59892	N-Nitrosomorpholine	( )	( )	( )	(X)	100
100754	N-Nitrosopiperidine	( )	( )	( )	(X)	100
930552	N-Nitrosopyrrolidine	( )	( )	( )	(X)	1
434071	Oxymetholone	( )	( )	( )	(X)	100
*	PAHs (Polycyclic aromatic hydrocarbons)	( )	( )	( )	(X)	100
1336363	PCBs (Polychlorinated biphenyls)	( )	( )	( )	(X)	1
127184	Perchloroethylene (Tetrachloroethene)	( )	( )	( )	(X)	100
50066	Phenobarbitol	( )	( )	( )	(X)	100
108952	Phenol	( )	( )	( )	(X)	100
75445	Phosgene	( )	( )	( )	(X)	100
7803512	Phosphine	( )	( )	( )	(X)	10
7723140	Phosphorus	( )	( )	( )	(X)	100
85449	Phthalic anhydride	( )	( )	( )	(X)	100
7758012	Potassium bromate	( )	( )	( )	(X)	100
57830	Progesterone	( )	( )	( )	(X)	100
1120714	1,3-Propane sultone	( )	( )	( )	(X)	100
115071	Propylene	( )	( )	( )	(X)	100
75569	Propylene oxide	( )	( )	( )	(X)	100
*	Radionuclides	( )	( )	( )	(X)	100
7782492	Selenium	( )	( )	( )	(X)	100
*	Selenium compounds	( )	( )	( )	(X)	100
*	Silica, crystalline	(X)	( )	( )	( )	100
1310732	Sodium hydroxide	( )	( )	( )	(X)	100
100425	Styrene	( )	( )	( )	(X)	100
1746016	2,3,7,8-Tetrachlordibenzo-p-dioxin (TCDD)	( )	( )	( )	(X)	100
62555	Thioacetamide	( )	( )	( )	(X)	100
62556	Thiourea	( )	( )	( )	(X)	100
108883	Toluene	( )	(X)	( )	( )	100
584849	Toluene-2,4-diisocyante	( )	( )	( )	(X)	10
91087	Toluene-2,6-diisocyante	( )	( )	( )	(X)	10
79016	Trichloroethylene	( )	( )	( )	(X)	100
88062	2,4,6-Trichlorophenol	( )	( )	( )	(X)	100
51796	Urethane	( )	( )	( )	(X)	100
75014	Vinyl chloride	( )	( )	( )	(X)	100
75354	Vinylidene chloride	( )	( )	( )	(X)	1
*	Xylenes	( )	( )	( )	(X)	100
7440666	Zinc	( )	( )	( )	(X)	100
1314132	Zinc Oxide	( )	( )	( )	(X)	100

If the Otherwise Present category is checked "Yes", please list that substance and specify the nature of the substance's presence in the space provided below. Attach additional sheets if necessary.

APPENDIX A-II.

Substances For Which Production, Use, or Other Presence Must Be Reported 5/15/89

Plant Number 11217 Date 9/3/89 Name of Person Completing This Form Margaret Berry

CAS Number	Substance Name	Use	Produce	Otherwise Present	Not Present at Facility
		Yes	Yes	Yes	No
53963	2-Acetylaminofluorene	(___)	(___)	(___)	(X)
23214928	Adriamycin	(___)	(___)	(___)	(X)
3688537	AF-2	(___)	(___)	(___)	(X)
*	Aflatoxins	(___)	(___)	(___)	(X)
60093	p-Aminoazobenzene (4-Aminoazobenzene)	(___)	(___)	(___)	(X)
97563	o-Aminoazotoluene	(___)	(___)	(___)	(X)
712685	2-Amino-5-(5-nitro-2-furyl)-1,3,4-thiadiazole	(___)	(___)	(___)	(X)
92671	4-Aminobiphenyl	(___)	(___)	(___)	(X)
82280	1-Amino-2-methylanthraquinone	(___)	(___)	(___)	(X)
54626	Aminopterin	(___)	(___)	(___)	(X)
-	Analgesic mixtures containing phenacetin	(___)	(___)	(___)	(X)
*	Androgenic (anabolic) steriods	(___)	(___)	(___)	(X)
90040	o-Anisidine	(___)	(___)	(___)	(X)
134292	o-Anisidine hydrochloride	(___)	(___)	(___)	(X)
140578	Aramite	(___)	(___)	(___)	(X)
492808	Auramine	(___)	(___)	(___)	(X)
115026	Azaserine	(___)	(___)	(___)	(X)
446866	Azathioprine	(___)	(___)	(___)	(X)
205823	Benzo[j]fluoranthene	(___)	(___)	(___)	(X)
98077	Benzoic trichloride (bezotrichloride)	(___)	(___)	(___)	(X)
1694093	Benzyl violet 4B	(___)	(___)	(___)	(X)
-	Betel quid with tabacco	(___)	(___)	(___)	(X)
494031	N-N-Bis(2-chloroethyl)-2-naphthylamine (Chlornapazine)	(___)	(___)	(___)	(X)
154938	Bischloroethyl nitrosourea	(___)	(___)	(___)	(X)
-	Bitumens, extracts of steam-refined and air refined bitumens	(___)	(___)	(___)	(X)
*	Bleomycins	(___)	(___)	(___)	(X)
55981	1,4-Butanediol dimethanesulfonate (Myleran)	(___)	(___)	(___)	(X)
25013165	Butylated hydroxyanisole (BHA)	(___)	(___)	(___)	(X)
3068880	beta-Butyrolactone	(___)	(___)	(___)	(X)
305033	Chlorambucil	(___)	(___)	(___)	(X)
82939	Chlorocyclizine hydrochloride	(___)	(___)	(___)	(X)
143500	Chlordecone (Kepone)	(___)	(___)	(___)	(X)
13010474	1-(2-chloroethyl)-3-cyclohexyl-1-nitrosourea (CCNU)	(___)	(___)	(___)	(X)
107302	Chloromethyl methyl ether (technical grade)	(___)	(___)	(___)	(X)
*	Chlorophenoxy herbicides	(___)	(___)	(___)	(X)
15663271	Cisplatin	(___)	(___)	(___)	(X)
6358538	Citrus Red No. 2	(___)	(___)	(___)	(X)

If the Otherwise Present category is checked "Yes", please list that substance and specify the nature of the substance's presence in the space provided below. Attach additional sheets if necessary. _____

Substances For Which Production, Use, or Other Presence Must Be Reported 5/15/89

Plant Number 11217 Date 8/3/89 Name of Person Completing This Form Margaret Berry

CAS Number	Substance Name	Use	Produce	Other Presence	Not Present at Facility
		Yes	Yes	Yes	No
14901087	Cycasin	( )	( )	( )	(X)
50180	Cyclophosphamide	( )	( )	( )	(X)
4342034	Dacarbazine	( )	( )	( )	(X)
20830813	Daunomycin	( )	( )	( )	(X)
50293	DDT(1,1,1-Trichloro-2,2-bis(p-chlorophneyl)ethane)	( )	( )	( )	(X)
613354	N,N'-Diacetylbenzidine	( )	( )	( )	(X)
39156417	2,4-Diaminoanisole sulfate	( )	( )	( )	(X)
101804	4,4'-Diaminodiphenyl ether	( )	( )	( )	(X)
226368	Dibenz[a,h]acridine	( )	( )	( )	(X)
224420	Dibenz[a,j]acridine	( )	( )	( )	(X)
194592	7H-Dibenzo[c,g]cabazole	( )	( )	( )	(X)
192654	Dibenzo[a,e]pyrene	( )	( )	( )	(X)
189640	Dibenzo[a,h]pyrene	( )	( )	( )	(X)
189559	Dibenzo[a,i]pyrene	( )	( )	( )	(X)
191300	Dibenzo[a,l]pyrene	( )	( )	( )	(X)
542756	1,3-Dichloropropene	( )	( )	( )	(X)
1464535	Diepoxybutane	( )	( )	( )	(X)
1615801	1,2-Diethylhydrazine	( )	( )	( )	(X)
56531	Diethylstilbestrol	( )	( )	( )	(X)
64675	Diethyl sulfate	( )	( )	( )	(X)
2238075	Diglycidyl resorcinol ether	( )	( )	( )	(X)
94586	Dihydrosafrole	( )	( )	( )	(X)
119904	3,3'-Dimethoxybenzidine	( )	( )	( )	(X)
55738540	trans-2-[(Dimethylamino)methylimino] 5-[2-(5-nitro-2-furyl)vinyl]-1,3,4-oxadiazole	( )	( )	( )	(X)
119937	3,3'-Dimethylbenzidine (o-tolidine)	( )	( )	( )	(X)
79447	Dimethylcarbamyl chloride	( )	( )	( )	(X)
540738	1,2-Dimethylhydrazine	( )	( )	( )	(X)
630933	Diphenylhydantoin	( )	( )	( )	(X)
122667	1,2-Diphenylhydrazine (hydrazobenzene)	( )	( )	( )	(X)
1937377	Direct Black 38	( )	( )	( )	(X)
2602462	Direct Blue 6	( )	( )	( )	(X)
1318021	Erionite	( )	( )	( )	(X)
50282	Estradiol 17 B	( )	( )	( )	(X)
53167	Estrone	( )	( )	( )	(X)
57636	Ethinylestradiol	( )	( )	( )	(X)
	* Estrogens, nonsteroidal	( )	( )	( )	(X)
	* Estrogens, steroidal	( )	( )	( )	(X)
62500	Ethyl methanesulfonate	( )	( )	( )	(X)
54350480	Etretinate	( )	( )	( )	(X)

If the Otherwise Present category is checked "Yes", please list that substance and specify the nature of the substance's presence in the space provided below. Attach additional sheets if necessary. _____

Substances for Which Production, Use, or Other Presence Must Be Reported 5/15/89

Plant Number 11217 Date 8/8/89 Name of Person Completing This Form Margaret Barry

CAS Number	Substance Name	Use	Produce	Otherwise Present	Not Present at Facility
		Yes	Yes	Yes	No
3570750	2-(2-Formylhydrazino)-4-(5-nitro-2-furyl)thiazole	(___)	(___)	(___)	(X)
67730114	Glu-P-1 (2-Amino-6-methyldipyrido[1,2-a:3',2'-d]imidazole)	(___)	(___)	(___)	(X)
67730125	Glu-P-2 (2-Aminodipyrido[1,2-a:3',2'-d]imidazole)	(___)	(___)	(___)	(X)
765344	Glycidaldehyde	(___)	(___)	(___)	(X)
16568028	Gyromitrin (Acetaldehyde methylformylhydrazone)	(___)	(___)	(___)	(X)
680319	Hexamethylphosphoramide	(___)	(___)	(___)	(X)
10034932	Hydrazine sulfate	(___)	(___)	(___)	(X)
76180966	IQ (2-Amino-3-methylimidazo[4,5-f]quinoline)	(___)	(___)	(___)	(X)
9004664	Iron dextran complex	(___)	(___)	(___)	(X)
4759482	Isotretinoin	(___)	(___)	(___)	(X)
301042	Lead acetate	(___)	(___)	(___)	(X)
7446277	Lead phosphate	(___)	(___)	(___)	(X)
520854	Medroxyprogestrone acetate	(___)	(___)	(___)	(X)
148823	Melphalan	(___)	(___)	(___)	(X)
4484208	5-Methoxypsoralen	(___)	(___)	(___)	(X)
75558	2-Methylaziridine (Propyleneimine)	(___)	(___)	(___)	(X)
3697243	5-Methylchrysene	(___)	(___)	(___)	(X)
72333	Mestranol	(___)	(___)	(___)	(X)
101611	4,4'-Methylene bis(N,N-dimethyl) benzamine	(___)	(___)	(___)	(X)
74884	Methyl iodide	(___)	(___)	(___)	(X)
66273	Methyl methanesulfonate	(___)	(___)	(___)	(X)
129157	2-Methyl-1-nitroanthraquinone (uncertain purity)	(___)	(___)	(___)	(X)
60153493	3-Methylnitrosoaminopropionitrile	(___)	(___)	(___)	(X)
64091914	4-(Methylnitrosoamino)-1-(3-pyridyl)-1-butanone (NNK)	(___)	(___)	(___)	(X)
70257	N-Methyl N'-nitro-N-nitrosoguanidine	(___)	(___)	(___)	(X)
56042	Methylthiouracil	(___)	(___)	(___)	(X)
_	Mineral oils	(X)	(___)	(___)	(___)
2385855	Mirex	(___)	(___)	(___)	(X)
50077	Mitomycin C	(___)	(___)	(___)	(X)
315220	Monocrotaline	(___)	(___)	(___)	(X)
139913	5-(Morpholinomethyl)-3-[5-nitrofurfurylidene) animo]-2-oxazolidinone	(___)	(___)	(___)	(X)
505602	Mustard gas (Sulfur mustard)	(___)	(___)	(___)	(X)
3771195	Nafenopin	(___)	(___)	(___)	(X)
91598	2-Naphtylamine	(___)	(___)	(___)	(X)
*	Nickel compounds	(___)	(___)	(___)	(X)
139139	Nitrilotriacetic acid	(___)	(___)	(___)	(X)
602879	5-Nitroacenaphthene	(___)	(___)	(___)	(X)

If the Otherwise Present category is checked "Yes", please list that substance and specify the nature of the substance's presence in the space provided below. Attach additional sheets if necessary. _____

Substances For Which Production, Use, or Other Presence Must Be Reported 5/15/89

Plant Number 11217 Date 8/3/89 Name of Person Completing This Form Margaret Berry

CAS Number	Substance Name	Use	Produce	Otherwise Present	Not Present at Facility
		Yes	Yes	Yes	No
99592	5-Nitro-o-anisidine	(___)	(___)	(___)	(X)
1836755	Nitrofen (technical grade)	(___)	(___)	(___)	(X)
555840	1-((5-Nitrofurfurylidene)amino)-2-imidazol idinone	(___)	(___)	(___)	(X)
531828	N-[4-(5-Nitro-2-furyl)-2-thiazolyl]acetamide	(___)	(___)	(___)	(X)
51752	Nitrogen mustard	(___)	(___)	(___)	(X)
1116547	N-Nitrosodiethanolamine	(___)	(___)	(___)	(X)
759749	N-Nitroso-N-ethylurea	(___)	(___)	(___)	(X)
615532	N-Nitroso-N-methylurethane (N-Methyl-N-nitrosourethane	(___)	(___)	(___)	(X)
4549400	N-Nitrosomethylvinylamine	(___)	(___)	(___)	(X)
684935	N-Nitroso-N-methlyurea	(___)	(___)	(___)	(X)
16543558	N-Nitrosonornicotine	(___)	(___)	(___)	(X)
13256229	N-Nitrosoarcosine	(___)	(___)	(___)	(X)
68224	Norethisterone	(___)	(___)	(___)	(X)
2646175	Oil Orange SS	(___)	(___)	(___)	(X)
794934	Panfuran S (Dihydroxymethylfuratrizine)	(___)	(___)	(___)	(X)
62442	Phenacetin	(___)	(___)	(___)	(X)
94780	Phenazopyridine hydrochloride	(___)	(___)	(___)	(X)
57410	Phenytoin	(___)	(___)	(___)	(X)
*	Polybrominated biphenyls (PBBs)	(___)	(___)	(___)	(X)
3761533	Ponceau MX	(___)	(___)	(___)	(X)
3564098	Ponceau 3R	(___)	(___)	(___)	(X)
366701	Procarbazine hydrochloride	(___)	(___)	(___)	(X)
*	Progestins	(___)	(___)	(___)	(X)
57578	beta-Propiolactone	(___)	(___)	(___)	(X)
51525	Propylthiouracil	(___)	(___)	(___)	(X)
50555	Reserpine	(___)	(___)	(___)	(X)
81072	Saccharin	(___)	(___)	(___)	(X)
94597	Safrole	(___)	(___)	(___)	(X)
-	Shale oils	(___)	(___)	(___)	(X)
132274	Sodium o-phenylphenate	(___)	(___)	(___)	(X)
-	Soots	(___)	(___)	(___)	(X)
10048132	Sterimatocystin	(___)	(___)	(___)	(X)
18883664	Streptozotocin	(___)	(___)	(___)	(X)
96093	Styrene oxide	(___)	(___)	(___)	(X)
95067	Sulfallate	(___)	(___)	(___)	(X)
-	Talc containing asbestiform fibers	(___)	(___)	(___)	(X)
-	Tars	(___)	(___)	(___)	(X)
50351	Thalidomide	(___)	(___)	(___)	(X)
139651	4,4'-Thiodianiline	(___)	(___)	(___)	(X)

If the Otherwise Present category is checked "Yes", please list that substance and specify the nature of the substance's presence in the space provided below. Attach additional sheets if necessary. _____

Substances For Which Production, Use, or Other Presence Must Be Reported 5/15/89

Plant Number 11217 Date 8/3/89 Name of Person Completing This Form Margaret Berry

CAS Number	Substance Name	Use	Produce	Otherwise Present	Not Present at Facility
		Yes	Yes	Yes	No
1314201	Thorium dioxide	(___)	(___)	(___)	(X)
*	Tobacco products, smokeless	(___)	(___)	(___)	(X)
*	alpha-chlorinated Toluenes	(___)	(___)	(___)	(X)
95534	o-Toluidine	(___)	(___)	(___)	(X)
636215	o-Toluidine hydrochloride	(___)	(___)	(___)	(X)
8001352	Toxaphene (polychlorinated camphenes)	(___)	(___)	(___)	(X)
299752	Treosulfan	(___)	(___)	(___)	(X)
52244	Tris(1-aziridinyl) phosphine sulfide (Thiotepa)	(___)	(___)	(___)	(X)
62450060	Trp-P-1 (3-amino-1,4-dimethyl-5H-pyrido(4,3-b) indole)	(___)	(___)	(___)	(X)
62450071	Trp-P-2 (3-amino-1,4-methyl-5H-pyrido(4,3-b) indole)	(___)	(___)	(___)	(X)
72571	Trypan blue	(___)	(___)	(___)	(X)
66751	Uracil mustard	(___)	(___)	(___)	(X)
99661	Valproate	(___)	(___)	(___)	(X)
593602	Vinyl bromide	(___)	(___)	(___)	(X)
81812	Warfarin	(___)	(___)	(___)	(X)

If the Otherwise Present category is checked "Yes", please list that substance and specify the nature of the substance's presence in the space provided below. Attach additional sheets if necessary. _____

* = Denotes a chemical catagory.
CAS Number = Chemical Abstract Service Number

MSDS

0100

MATERIAL SAFETY DATA SHEET

CORPORATE RESEARCH & DEVELOPMENT

SCHENECTADY, N. Y. 12305

Phone: (518) 385-4085 DIAL COM: 8*235-4085

MATERIALS INFORMATION SERVICES

NO. 314

TRICHLOROTRIFLUOROETHANE

Revision B

Date July 1979

SECTION I. MATERIAL IDENTIFICATION

MATERIAL NAME: TRICHLOROTRIFLUOROETHANE

OTHER DESIGNATIONS: 1,1,2-Trichloro-1,2,2-trifluoroethane, FCl_2CCClF_2, GE Materials D5877 and D5881A, CAS# 000 076 131

MANUFACTURER: Available from many suppliers

TRADE NAMES: ARKLONE P-113, BLACO-TRON TF, FREON TF, FREON 113, FRIGEN 113TR-T, GENETRON 113, GENESOLV D, ISOTRON 113, REFRIGERANT 113, UCON 113

SECTION II. INGREDIENTS AND HAZARDS	%	HAZARD DATA
Trichlorotrifluoroethane	ca 100*	8-hr TWA 1000 ppm or 7600 mg/m^3 Human, inhalation TCLo 4500 ppm (central nervous system) Rat, oral LDLo 45 mg/kg

*Material is commercially available in refrigerant and high purity solvent grades. Stabilizers are not normally used.

SECTION III. PHYSICAL DATA

Boiling point, 1 atm, deg F (C) --	117.6 (47.6)	Specific gravity (20/4C) --	1.57
Vapor pressure at 70 F, mm Hg ----	285	Volatiles, % ----------	ca 100
Vapor density (Air=1) ----------	ca 6	Evaporation rate (Acetone=1)	0.45
Solubility in H_2O at 70 F, % -----	0.028	Melting point, deg C ------	-35 to -36
		Molecular weight ----------	187.39

Appearance & odor: Clear, colorless liquid with a slight ethereal odor whose recognition threshold (100% of test panel for UCON-113) is 135 ppm in air. (Vapor may be detected below 50 ppm, unfatigued.)

SECTION IV. FIRE AND EXPLOSION DATA

Flash Point and Method	Autoignition Temp.	Flammability Limits in Air	LOWER	UPPER
None	None	None	-	-

Extinguishing media: Use that which is appropriate for the surrounding fire.

This is a nonflammable material; however, when it is involved in a fire, the firefighters should use self-contained breathing apparatus for protection against suffocating vapors and toxic and corrosive decomposition products.

SECTION V. REACTIVITY DATA

Trichlorotrifluoroethane is a stable material under normal use and storage conditions. It does not undergo or cause hazardous polymerization. Thermal-oxidative decomposition begins at about 250 C to give halogen acids, halogens, and carbonyl halides which are toxic and corrosive.

It can react violently with active metals such as sodium, potassium, and barium; and finely divided aluminum, zinc, magnesium and beryllium can also react, especially at high temperature.

GENERAL ELECTRIC

Copyright © — 1979 By General Electric Company

MATERIAL SAFETY DATA SHEET

11-15-85

CHEMICAL NAME AND SYNONYMS:

CHEMICAL FAMILY: | TRADE NAME: 85120 VAPOR DEGREASING SOLVENT

FORMULA: | D.O.T. SHIPPING CLASS: NON-HAZARDOUS

I. PHYSICAL DATA

BOILING POINT (°F)	120	SPECIFIC GRAVITY (WATER = 1)	1.26
VAPOR PRESSURE (mmHg @) 20°C	380	PERCENT VOLATILE (BY VOLUME)	100
VAPOR DENSITY (AIR = 1)	4.6	EVAPORATION RATE (CCl_4 = 1)	1.74
SOLUBILITY IN WATER (% by wt.)	NO		
APPEARANCE AND ODOR	CLEAR, COLORLESS LIQUID, CHARACTERISTIC ODOR		

II. HAZARDOUS INGREDIENTS

MATERIAL	%	TLV (ppm)	C.A.S. REGISTRY #
ISOPROPYL ALCOHOL	12	400	67-63-0
METHYL CHLOROFORM	60	350	71-55-6
TRICHLOROTRIFLUOROETHANE	9	1000	76-13-1
TRICHLOROMONOFLUOROMETHANE	16	1000	75-69-4
INHIBITORS	3	N/A	N/A

III. FIRE AND EXPLOSION HAZARD DATA

FLASH POINT (T.O.C)	NONE	FLAMMABILITY LIMITS IN AIR (% by volume)	LOWER: N/A	UPPER: N/A

EXTINGUISHING MEDIA: WATER | CARBON DIOXIDE | ALCOHOL FOAM | DRY CHEMICAL

SPECIAL FIRE FIGHTING PROCEDURES: USE WATERSPRAY TO COOL FIRE-EXPOSED CONTAINERS AND CONTROL VAPORS

UNUSUAL FIRE AND EXPLOSION HAZARDS: SEALED CONTAINERS COULD EXPLODE DURING FIRE, RESULTING IN HIGHLY TOXIC FUMES.

NFPA RATING: 0 / 2 / 0

The information contained herein is based on data considered accurate and given in good faith but no warranty, expressed or implied, is made.

LITTON/KESTER SOLDER
515 EAST TOUHY AVENUE
DES PLAINES, IL 60018
EMERGENCY PHN (312) 297-1600

566.11 81

IV. HEALTH HAZARD DATA

THRESHOLD LIMIT VALUE: 500ppm

EFFECTS OF OVER-EXPOSURE: DIZZINESS, NARCOTIC IN HIGH CONCENTRATIONS. MAY CAUS HEADACHE AND DROWSINESS.

EMERGENCY AND FIRST AID PROCEDURES.

EYE CONTACT: FLUSH WITH PLENTY OF WATER.

SKIN CONTACT: WASH WITH SOAP AND WATER. REPLACE MOISTURE WITH HAND LOTION.

INHALATION: REMOVE TO FRESH AIR.

INGESTION: INDUCE VOMITING. CALL A PHYSICIAN.

V. REACTIVITY DATA

STABILITY:	UNSTABLE		CONDITIONS TO AVOID:
	STABLE	X	

INCOMPATIBILITY (MATERIALS TO AVOID):

HAZARDOUS DECOMPOSITION PRODUCTS: MAY DECOMPOSE IN CONTACT WITH FLAME TO FORM PHOSGENE AND HYDROCHLORIC ACID.

HAZARDOUS POLYMERIZATION:	MAY OCCUR		CONDITIONS TO AVOID:
	WILL NOT OCCUR	X	

VI. SPILL OR LEAK PROCEDURES

STEPS TO BE TAKEN IN CASE MATERIAL IS RELEASED OR SPILLED: WIPE UP IMMEDIATELY BY SOAKI UP INTO ABSORBENT MATERIAL. AVOID BREATHING VAPORS. REMOVE SOAKED CLOTHIN

WASTE DISPOSAL METHOD: ACCORDING TO LOCAL REGULATIONS, USUALLY BY PYROLYSIS

VII. SPECIAL PROTECTION INFORMATION

RESPIRATORY PROTECTION (SPECIFY TYPE): USUALLY NOT REQUIRED

VENTILATION	LOCAL EXHAUST: REMOVE FUMES/ VAPORS FROM BREATHING ZONE	SPECIAL:
	MECHANICAL (GENERAL):	OTHER:

PROTECTIVE GLOVES: NEOPRENE | EYE PROTECTION: SAFETY GOGGLES

OTHER PROTECTIVE EQUIPMENT: USE A RESPIRATOR WHEN ENTERING VAPOR DEGREASING EQUIPMENT.

VIII. SPECIAL PRECAUTIONS

PRECAUTIONS TO BE TAKEN IN HANDLING AND STORAGE: AVOID EYE AND SKIN CONTACT. AVOID BREATHING VAPORS. STORE AT TEMPERATURE NOT EXCEEDING 90°F.

OTHER PRECAUTIONS: OPEN CONTAINERS CAREFULLY BECAUSE OF INTERNAL PRESSURE BUILDUP.

I - PRODUCT IDENTIFICATION

4086-92750

COMPANY NAME: Calgon Vestal Laboratories

ADDRESS: 7501 Page Avenue, St. Louis, Missouri 63133 | Tel No: (314)862-2000

PRODUCT NAME: P-3576 | Product No.: 1930

Synonyms: 1,1,1-Trichloroethane-Cleaner and Degreaser | BOLC*: 2725

Shipping Description: Compound,Cleaning,Scouring or Washing N.O.I. Liquid

II - HAZARDOUS INGREDIENTS OF MIXTURES

MATERIAL: (CAS#)	% By Wt.	TLV	PEL
1,1,1-Trichloroethane*(71-55-6)	100	350ppm	350ppm
*ACGIH Short-Term Exposure Limit;450ppm			

III- PHYSICAL DATA

Vapor Pressure, mm Hg: 100 @ 20C	Vapor Density (Air=1)60-90F: 4.55
Evaporation Rate(ether=1): N/A	% Volatile by wt 100
Solubility in H2O: Negligible	pH @ Solution N/A
Freezing Point F: N/A	pH as Distributed: N/A
Boiling Point F: 165 Degree	Appearance: Clear,Colorless Liquid
Specific Gravity H2O=1 @25C: 1.315	Odor: Mild Chloroform-like Odor

IV - FIRE AND EXPLOSION

Flash Point F: N/A	Flammable Limits: N/A

Extinguishing Media: Waterfog,If involved in fire use water spray to cool exposed containers.

Special Fire Fighting Procedures: Exercise caution when fighting any chemical fire.Respiratory protection is essential.

Unusual Fire and Explosion Hazards: When involved in fire,product can emit highly toxic and irritating fumes.

V - REACTIVITY DATA

Stability - Conditions to avoid: Extreme heat,fire conditions

Incompatibility: Strong oxidizers;use or storage in aluminum containers.

Hazardous Decomposition Products: Hydrogen Chloride,chlorine and phosgene upon heat decomposition.

Conditions Contributing to Hazardous Polymerization: Product will not polymerize.

-(Cont'd on Page 2)

EMISSION QUANTIFICATION METHODS SUMMARY FORM

EMISSION QUANTIFICATION METHODS

SUMMARY FORM

EMISSION POINT	ASSOCIATED DEVICE	SUBSTANCE QUANTIFIED	METHOD OF QUANTIFICATION	SOURCE TEST METHOD
90001, F1	1	Chromium -	6	N/A
	(Permit #'s	18540299		
	142251,			
	142253)			
90002, 90003	2	Chromium -	6	N/A
F2		18540299		
F3	3	Chromium -	6	N/A
		18540299		
F4	4	Chromium -	6	N/A
	(Permit #	18540299		
	142252)			
F5	5	Chromium -	6	N/A
		18540299		
F6	6	Chromium -	6	N/A
		18540299		
F7	7	Hydrochloric	10	N/A
		Acid - 7647010		
F8	8	Copper -	6	N/A
		7440508		
F9	9	Methyl	7	N/A
	(Permit #	Chloroform -		
	P43029)	71556		
F10	10	Fluorocarbons	7	N/A
	(Permit #	1105		
	M60720)			

THIS FORM MAY BE DUPLICATED AS NECESSARY

READ INSTRUCTIONS ON THE BACK

EMISSION QUANTIFICATION METHODS

SUMMARY FORM

EMISSION POINT	ASSOCIATED DEVICE	SUBSTANCE QUANTIFIED	METHOD OF QUANTIFICATION	SOURCE TEST METHOD
90004, F11	11	Silica -	11	N/A
	(Permit #	1175		
	P20643)			
F12	12	Chlorine -	5	N/A
		7782505		
F13	13	Benzene - 71432	6	N/A
	(Permit #	Toluene -		
	P 5144)	108883		
		Formaldehyde -		
		50000		
90005, F14	14	Fluorocarbons	7	N/A
	(Permit #	1105		
	P36679)			
F15	15	Methyl	7	N/A
	(Permit #	Chloroform -		
	M 51995)	71556		
F16	16	Methyl	7	N/A
		Chloroform -		
		71556		
F17	17	Chlorine -	6	N/A
		7782505		
F18	18	Fluorocarbons	7	N/A
		1105		
F19	19	Methyl	7	N/A
		Chloroform -		
		71556		

THIS FORM MAY BE DUPLICATED AS NECESSARY

READ INSTRUCTIONS ON THE BACK

EMISSION QUANTIFICATION METHODS

SUMMARY FORM

EMISSION POINT	ASSOCIATED DEVICE	SUBSTANCE QUANTIFIED	METHOD OF QUANTIFICATION	SOURCE TEST METHOD
90007, F20	20	Toluene -	7	N/A
	(Permit #	108883		
	M 42415)			
F21	21	Methyl	7	N/A
		Chloroform -		
		71556		
90008, 90009	22	Lead -	6	N/A
F22	(Permit #	7439921		
	M 60608)			
90002,90003	23	Cadmium	6	N/A
F23		7440439		

THIS FORM MAY BE DUPLICATED AS NECESSARY

READ INSTRUCTIONS ON THE BACK

SCAQMD
TXFORM

7

Air Toxics Inventory Report

ALLIED-SIGNAL AEROSPACE COMPANY
Bendix Electrodynamics Division

Submitted To:

South Coast Air Quality Management District
9150 Flair Drive
El Monte, CA 91731

June 1, 1990

Submitted By:

Allied-Signal Aerospace Company
Bendix Electrodynamics Division
11600 Sherman Way
North Hollywood, CA 91605-5887

In Consultation With:

Dynamac Corporation
5701 Lindero Canyon Road
Westlake Village, CA 91362
(818) 597-1061

041011

SOUTH COAST AIR QUALITY MANAGEMENT DISTRICT

9150 Flair Drive
El Monte, CA 91731

AB 2588 AIR TOXICS INVENTORY REPORT
APPLICATION FORM

Company Name: Allied-Signal Aerospace Company

Mailing Address: 11600 Sherman Way

North Hollywood, CA 91605-5887

Facility Address: Same as above

Facility AQMD ID #: 11217 (From your plan approval letter)

Contact Person (Company Official): Danilo Gutierrez

Telephone #: (818) 503-3546

Report Preparer (If not a Company Official): Stephen Roe, Dynamac Corporation

Telephone #: (916) 363-1695

Signature of the Report Preparer: Stephen Roe

Signature of Responsible Company Official:

Plan Date

THIS FORM MUST BE FILLED OUT AND MAILED WITH THE INVENTORY REPORT 1989

EMISSION YEAR 19 89	AIR TOXICS EMISSION DATA SYSTEM REVIEW & UPDATE REPORT FACILITY DESCRIPTION	FORM FAC

FACILITY DATA

COMPANY NAME: ALLIED-SIGNAL AEROSPACE CO.

ADDRESS: 11600 SHERMAN WAY

CITY: NORTH HOLLYWOOD

ZIP CODE: 91605-5887

CONTACT PERSON: DANILO GUTIERREZ

TELEPHONE: 818-503-3546

FACILITY SIC: 3769

NUMBER OF EMPLOYEES: 550

MAILING ADDRESS DATA

SAME AS ABOVE

COMPANY NAME:

ADDRESS:

CITY:

STATE:

ZIP CODE:

ATTENTION:

FOR OFFICE USE ONLY

COUNTY ID:

FACILITY ID:

ACTION CODE:

DISTRICT:

AIR BASIN CODE:

CITY CODE (OPTIONAL)

AQCR (OPTIONAL)

SUBCOUNTY ID

FACD1 (OPTIONAL)

FACD2 (OPTIONAL)

UTM ZONE

UTM EAST

UTM NORTH

ARB/FAC 080289

NAME: Steve Roe DATE: 4/18/90

CONTENTS

ABBREVIATIONS

I. SUMMARY

II. PLAN MODIFICATIONS

III. FACILITY EMISSIONS SUMMARY FORM

IV. CORE REPORTING FORMS

V. SUPPLEMENTAL PROCESS PARAMETER FORMS

VI. FACILITY DIAGRAM AND PLOT PLAN

APPENDIX A EMISSION CALCULATIONS

APPENDIX B SUPPORTING DOCUMENTATION

ABBREVIATIONS

ABBREVIATIONS USED IN QUANTIFYING AIR RELEASES

MHE	Maximum Hourly Emissions
AAE	Average Annual Emissions
EF	(Substance) Emission Factor
HOP	Daily Hours of Operation
DOP	Days of Operation Per Year
%S	Mass of Substance To Be Quantified/Total Mass of Mixture
SQFT	Square feet
MSDS	Material Safety Data Sheet
cfm or CFM	Cubic feet per minute
fpm or FPM	Feet per minute
ht	Height
d	Diameter
t	Gas temperature
Q	Gas flow rate
v	Gas velocity
VOC	Volatile organic compounds

ADDITIONAL ABBREVIATIONS AND ACRONYMS

CAS No.	Chemical Abstract Service Number
ARB	Air Resources Board
CARB	California Air Resources Board
AQMD	Air Quality Management District
APCD	Air Pollution Control District
AB2588	Assembly Bill 2588
ATIP	Air Toxics Inventory Plan
ATIR	Air Toxics Inventory Report

I. SUMMARY

This document is the Air Toxics Inventory Report (ATIR) for Allied-Signal Aerospace Company, Bendix Electrodynamics Division, an aerospace facility located at 11600 Sherman Way, North Hollywood, California. The report is being submitted to the South Coast Air Quality Management District (the District) to comply with California Health and Safety Code Section 44300 et seq.

This ATIR quantifies the emissions from the sources specified in the Allied-Signal Aerospace Company, Bendix Electrodynamics Division Air Toxics Inventory Plan (ATIP) that was approved by the District in February 1990.

Summary Table I-1 presents the ID numbers that were assigned to the emission points and devices in the Plan and the corresponding new five-digit ID numbers reassigned in this Report.

Section II indicates the differences between the approved Plan and this Report.

Sections III through VI, respectively, contain a facility emissions summary form, the required core reporting forms in sequence by device number, the supplemental process parameter forms, and facility diagram(s) and plot plan.

Summary Table 1 - Reassigned ID Numbers

Emission Points and Devices	Previously Assigned ATIP ID Number	Reassigned ATIR ID Number
Devices	1	70001
	2	70002
	3	70003
	4	70004
	5	70005
	6	70006
	7	70007
	8	70008
	9	70009
	10	70010
	11	70011
	12	70012
	13	70013
	14	70014
	15	70015
	16	70016
	17	70017
	18	70018
	19	70019
	20	70020
	21	70021
	22	70022
	23	70023
Emission Points	90003, 90005 & 90011	Emissions not reportable
	90004	80004
	90007	80004
	90008 & 90009	80008
	F9	80009
	F13	90011
	F15	80012

II. PLAN MODIFICATIONS

Additional information was obtained and calculations were completed for each substance from the devices listed in the ATIP (see Appendix A). The following information summarizes the differences between the information presented in the inventory plan and the information in the core reporting forms of this report.

Device/Emission Point	Comment
70001	Source test data used rather than Emission Factor.
70006	In order to improve emission estimation, the ARB emission factor for chrome plating was used instead of the proposed EPA emission factor.
70002, 70006, 70007, 70008, 70011, 70013, 70014, 70020, 70022, 70023	Emission calculations for these devices show that the emissions are below the applicable degree of accuracy. See Appendix A for the individual calculations. Where applicable, the substances emitted have been included on Form S-UP.
70009	This device is vented and has been assigned vent #80009.
70010	Methyl chloroform, not fluorocarbons, is used as the solvent in this degreaser. Emissions of methyl chloroform have been calculated.
70014	Toluene, not fluorocarbons, is the most common solvent in the paint booth. Toluene emissions are quantified in Appendix B and are below the degree of accuracy.
70015	This degreaser is vented and has been assigned vent #80012.
70012, 70017	There are a total of 12 cooling towers, 10 of which are in operation. Device #70012 represents 8 towers and Device #70017 represents 4 towers.
70018	Methyl chloroform emissions for this device will be included with the calculations for emissions from Device #70009.
70019	This device was not used in 1989.

III. FACILITY EMISSIONS SUMMARY FORM

FACILITY EMISSION SUMMARY FORM

COMPANY Allied-Signal Aerospace Company

AQMD FACILITY ID # 11217

APPENDIX A-I SUBSTANCES		FACILITYWIDE EMISSIONS		OPERATING SCHEDULE	
AIR TOXIC NAME	CAS NO.	MAX LBS / HR	AVG LBS / YR	HRS / DAY	DAYS / YR
Hexavalent Chromium	18540299	0.012	3.54	11	350
Methyl Chloroform	71556	10.4	51011	16	250
Chlorine	7782505	0.03	105	24	365
Fluorocarbons	1105	0.21	99.4	2	250

THE INVENTORY SHOULD BE FOR THE PERIOD JAN 1, 1989 THRU DEC 31 1989.

THIS FORM MUST BE FILLED OUT AND SUBMITTED WITH THE REPORT

THIS FORM MAY BE DUPLICATED AS NECESSARY

AB 2588 ATIR 89

IV. CORE REPORTING FORMS

EMISSION YEAR 19 89	AIR TOXICS EMISSION DATA SYSTEM REVIEW & UPDATE REPORT STACK DATA	FORM STK

FOR OFFICE USE ONLY COUNTY ID: FACILITY ID:

DO NOT DELETE STACK IF IT SERVES OTHER DEVICES. SEE INSTRUCTIONS

DESC CODE	STACK/VENT CATEGORY	REQUIRED INFORMATION
	AMBIENT TEMP & LOW-VELOCITY EXHAUST (T W/IN 25 F OF AMBIENT & V LT 750 FPM)	
1	RELEASE POINT(RP) AT GROUND-LEVEL	STACK ID & CODE ONLY
2	RELEASE FROM BLDG HVAC ONLY	STACK ID, CODE, & STACK HEIGHT
3	RP W/IN (2.5 X HB) ABOVE GROUND AND W/IN (5 X HB) SIDEWAYS TO NEAREST BLDG	STACK ID, CODE & STACK HEIGHT
4	OTHER STACK/VENT (LOW T,V)	STACK ID, CODE & STACK HEIGHT
	OTHER TEMP & FLOW CONDITIONS	
5	RP W/IN (2.5 X HB) ABOVE GROUND AND W/IN (5 X HB) SIDEWAYS TO NEAREST BLDG	ALL STACK INFORMATION
6	OTHER STACK/VENT (OTHER T,V)	ALL STACK INFORMATION

WHERE HB = HEIGHT OF NEAREST BUILDING AND HVAC = HEATING, VENTILATING AND AIR CONDITIONING

OFC USE — *OFC USE ONLY*

********* EXHAUST *********

ACTION CODE	STACK ID	DESC CODE	HEIGHT ABOVE GROUND (FEET)	DIAMETER (FEET)	GAS TEMP (F)	GAS FLOW RATE (CFM)	GAS VELOCITY (FPM)	UTM EAST (KILOMETER)	UTM NORTH (KILOMETER)
	90001	5	30	3.5	65	28000	2910		
	90002	5	20	3.5	65	26500	2754		
	80012	3	50						
	80004	3	10						

NAME Steve Roe DATE 4/18/90

ARB STK.830323

EMISSION YEAR 19 89	AIR TOXICS EMISSION DATA SYSTEM REVIEW & UPDATE REPORT STACK DATA	FORM STK

FOR OFFICE USE ONLY COUNTY ID: FACILITY ID:

DO NOT DELETE STACK IF IT SERVES OTHER DEVICES. SEE INSTRUCTIONS

DESC CODE	STACK/VENT CATEGORY	REQUIRED INFORMATION
	AMBIENT TEMP & LOW-VELOCITY EXHAUST (T W/IN 25 F OF AMBIENT & V LT 750 FPM)	
1	RELEASE POINT(RP) AT GROUND-LEVEL	STACK ID & CODE ONLY
2	RELEASE FROM BLDG HVAC ONLY	STACK ID, CODE, & STACK HEIGHT
3	RP W/IN (2.5 X HB) ABOVE GROUND AND W/IN (5 X HB) SIDEWAYS TO NEAREST BLDG	STACK ID, CODE & STACK HEIGHT
4	OTHER STACK/VENT (LOW T,V)	STACK ID, CODE & STACK HEIGHT
	OTHER TEMP & FLOW CONDITIONS	
5	RP W/IN (2.5 X HB) ABOVE GROUND AND W/IN (5 X HB) SIDEWAYS TO NEAREST BLDG	ALL STACK INFORMATION
6	OTHER STACK/VENT (OTHER T,V)	ALL STACK INFORMATION

WHERE HB = HEIGHT OF NEAREST BUILDING AND HVAC = HEATING, VENTILATING AND AIR CONDITIONING

OFC USE

********* EXHAUST *********

ACTION CODE	STACK ID	DESC CODE	HEIGHT ABOVE GROUND (FEET)	DIAMETER (FEET)	GAS TEMP (F)	GAS FLOW RATE (CFM)	GAS VELOCITY (FPM)	*OFC USE ONLY* UTM EAST (KILOMETER)	UTM NORTH (KILOMETER)
	80007	3	40						
	80008	3	50						
	80009	3	20						

NAME Steve Roe DATE 4/18/90

ARB STK.850303

EMISSION YEAR 19 89

AIR TOXICS EMISSION DATA SYSTEM REVIEW & UPDATE REPORT
DEVICE DESCRIPTION AND DEVICE-STACK RELATIONS

FORM **DEV**

FOR OFFICE USE ONLY

COUNTY ID:

FACILITY ID

OFC USE

***** OFFICE USE ONLY *****
**** EACH ITEM IS OPTIONAL ***

ACTION CODE	DEVICE ID	DEVICE NAME	NBR OF DEV.	DEVD1	DEVICE GROUP	STACK ID	PERMIT ID (IF AVAILABLE)	DEVD2
	70001	CHROME PLTG TNK	1			90001	142251	
	70001	CHROME PLTG TNK	1			90001	142253	
	70003	CHROME CONVRSN	1			90002		
	70004	CHROME STRIP	1			90001	142252	
	70005	CHROME CONVERSN	1			90002		
	70021	DEGREASER	1				M60608	

NAME Steve Roe DATE 4/18/90

ARB-CEV-240389

EMISSION YEAR 19 89

AIR TOXICS EMISSION DATA SYSTEM REVIEW & UPDATE REPORT
DEVICE DESCRIPTION AND DEVICE-STACK RELATIONS

FORM **DEV**

FOR OFFICE USE ONLY

COUNTY ID:

FACILITY ID

CFC USE

****** OFFICE USE ONLY *****
**** EACH ITEM IS OPTIONAL ***

ACTION CODE	DEVICE ID	DEVICE NAME	NBR OF DEV.	STACK ID	PERMIT ID (IF AVAILABLE)	DEVD1	DEVICE GROUP	DEVD2
	70009	DEGREASER	1	80009	PH3029			
	70010	VAPOR DEGREASER	1		M60720			
	70012	COOLING TOWERS	8					
	70015	DEGREASER	1	80012	M51995			
	70016	PARTS CLEANER	1					
	70017	COOLING TOWERS	4					

NAME Steve Roe DATE 4/18/90

ARB/DEV-240389

EMISSION YEAR 19 89

AIR TOXICS EMISSION DATA SYSTEM REVIEW & UPDATE REPORT
DEVICE DESCRIPTION AND DEVICE-STACK RELATIONS

FORM DEV

FOR OFFICE USE ONLY

COUNTY ID: 1

FACILITY ID

OFC USE

***** OFFICE USE ONLY *****
**** EACH ITEM IS OPTIONAL ***

ACTION CODE	DEVICE ID	DEVICE NAME	NBR OF DEV.	DEVD1	DEVICE GROUP	STACK ID	PERMIT ID (IF AVAILABLE)	DEVD2
	70018	ENGINEERING LAB	1					

NAME Steve Roe DATE 4/18/90

ARB/CEV-240389

EMISSION YEAR 19 89

AIR TOXICS EMISSION DATA SYSTEM REVIEW AND UPDATE REPORT
PROCESS AND EMITTENTS DATA

FORM PRO SIDE A

FOR OFFICE USE ONLY

PROCESS DESCRIPTION: C

SCC NO:

COUNTY ID:

AIR BASIN:

ACTION CODE:

PROD1 (OPTIONAL):

PROD2 (OPTIONAL):

FACILITY ID:

STOP FILL OUT ANY SUPPLEMENTAL PROCESS FORM(S) FOR THIS PROCESS FIRST. THEN FILL OUT THIS PAGE, SUBMITTING ONE FOR EACH EMITTING PROCESS IN YOUR FACILITY.

SECTION 1
PROCESS DATA

DEVICE I.D.: 7 0 0 0 3

SIC: 3 7 6 9

CONFIDENTIAL (Y/N) IF Y CHECK SMALL BOXES AS APPROPRIATE: N

PROCESS EQUIPMENT DESCRIPTION: C H R O M E . C O N V E R S N C

FUEL TYPE /OTHER PROCESS INFO: C

NOTE USE 1 SPACE FOR EACH DECIMAL POINT

TOTAL YEARLY PROCESS RATE (UNITS/YR)	MAXIMUM HOURLY PROCESS RATE (UNITS/HR)	PROCESS UNITS	HRS/ DAY	DAYS/ WEEK	WKS/ YEAR
2.4 5 C	C	P T 0 7 0 C	7 C	7 C	50 C

RELATIVE MONTHLY ACTIVITY (%) C

JAN	FEB	MAR	APR	MAY	JUN	JUL	AUG	SEP	OCT	NOV	DEC
8.0	8.4	8.4	8.4	8.4	8.4	8.4	8.4	8.4	8.4	8.4	8.0

OFFICE USE ONLY

SECTION 2

EMITTENT DATA					EMISSIONS
ACTION CODE	EMITTENT ID	EST METH	ACTUAL EMISSIONS FACTOR(LBS/UNIT)		ANNUAL AVERAGE EMISSIONS (LBS/YR)
	1 8 5 4 0 2 9 9	7 C	0 . 0 0 5 7 C		1.40
ALLOWABLE EMIS LBS/YR(OPTIONAL)	*CONTROL EQPT CODES* PRIMARY	SECONDARY	OVERALL CONTROL EFF(%)	FULL/ PART	HOURLY MAX EMISSIONS (LBS/HOUR)
	0 0 0 C	C	C	C	0.0057
ACTION CODE	EMITTENT ID	EST METH	ACTUAL EMISSIONS FACTOR(LBS/UNIT)		ANNUAL AVERAGE EMISSIONS (LBS/YR)
		C	C		
ALLOWABLE EMIS LBS/YR(OPTIONAL)	*CONTROL EQPT CODES* PRIMARY	SECONDARY	OVERALL CONTROL EFF(%)	FULL/ PART	HOURLY MAX EMISSIONS (LBS/HOUR)
	C	C	C	C	

ARB PRC 89032

NAME Steve Roe DATE 4/18/90

EMISSION YEAR 19 89

AIR TOXICS EMISSION DATA SYSTEM REVIEW AND UPDATE REPORT
PROCESS AND EMITTENTS DATA

FORM PRO SIDE A

FOR OFFICE USE ONLY

PROCESS DESCRIPTION: C

SCC NO:

COUNTY ID:

AIR BASIN:

ACTION CODE:

PROD1 (OPTIONAL):

PROD2 (OPTIONAL):

FACILITY ID:

STOP FILL OUT ANY SUPPLEMENTAL PROCESS FORM(S) FOR THIS PROCESS FIRST. THEN FILL OUT THIS PAGE. SUBMITTING ONE FOR EACH EMITTING PROCESS IN YOUR FACILITY.

SECTION 1
PROCESS DATA

DEVICE I.D.: 70001

SIC: 3769

CONFIDENTIAL (Y/N) IF Y CHECK SMALL BOXES AS APPROPRIATE: N

PROCESS EQUIPMENT DESCRIPTION: CHROME PLT/ANODZ C

FUEL TYPE /OTHER PROCESS INFO: 2 TANKS C

NOTE USE 1 SPACE FOR EACH DECIMAL POINT

TOTAL YEARLY PROCESS RATE (UNITS/YR)	MAXIMUM HOURLY PROCESS RATE (UNITS/HR)	PROCESS UNITS	HRS/DAY	DAYS/WEEK	WKS/YEAR
3.25E-6 C	8.44 C	PT0.45 C	11 C	7 C	50 C

RELATIVE MONTHLY ACTIVITY (%) C

JAN	FEB	MAR	APR	MAY	JUN	JUL	AUG	SEP	OCT	NOV	DEC
8.0	8.4	8.4	8.4	8.4	8.4	8.4	8.4	8.4	8.4	8.4	8.0

OFFICE USE ONLY

SECTION 2

EMITTENT DATA | EMISSIONS

ACTION CODE:

ALLOWABLE EMIS LBS/YR(OPTIONAL):

EMITTENT ID	EST METH	ACTUAL EMISSIONS FACTOR(LBS/UNIT)	ANNUAL AVERAGE EMISSIONS (LBS/YR)
1854029 9	01 C	6.16E-8 C	0.2

CONTROL EQPT CODES PRIMARY	SECONDARY	OVERALL CONTROL EFF(%)	FULL/PART	HOURLY MAX EMISSIONS (LBS/HOUR)
001 C	C	C	F C	0.00041

ACTION CODE:

ALLOWABLE EMIS LBS/YR(OPTIONAL):

EMITTENT ID	EST METH	ACTUAL EMISSIONS FACTOR(LBS/UNIT)	ANNUAL AVERAGE EMISSIONS (LBS/YR)
	C	C	

CONTROL EQPT CODES PRIMARY	SECONDARY	OVERALL CONTROL EFF(%)	FULL/PART	HOURLY MAX EMISSIONS (LBS/HOUR)
C	C	C	C	

NAME _____ DATE _____

ARB PRC 89032

EMISSION YEAR 1989

AIR TOXICS EMISSION DATA SYSTEM REVIEW AND UPDATE REPORT
PROCESS AND EMITTENTS DATA

FORM PRO SIDE A

FOR OFFICE USE ONLY

PROCESS DESCRIPTION: C

SCC NO:

COUNTY ID:

AIR BASIN:

ACTION CODE:

PROD1 (OPTIONAL):

PROD2 (OPTIONAL):

FACILITY ID:

STOP FILL OUT ANY SUPPLEMENTAL PROCESS FORM(S) FOR THIS PROCESS FIRST. THEN FILL OUT THIS PAGE. SUBMITTING ONE FOR EACH EMITTING PROCESS IN YOUR FACILITY.

SECTION 1
PROCESS DATA

DEVICE I.D.: 70005

SIC: 3769

CONFIDENTIAL (Y/N) IF Y CHECK SMALL BOXES AS APPROPRIATE: N

PROCESS EQUIPMENT DESCRIPTION: CHROME CONVERSN C

FUEL TYPE /OTHER PROCESS INFO: C

NOTE USE 1 SPACE FOR EACH DECIMAL POINT

TOTAL YEARLY PROCESS RATE (UNITS/YR)	MAXIMUM HOURLY PROCESS RATE (UNITS/HR)	PROCESS UNITS	HRS/DAY	DAYS/WEEK	WKS/YEAR
245 C	1 C	PT 070 C	7 C	7 C	50 C

RELATIVE MONTHLY ACTIVITY (%) C

JAN	FEB	MAR	APR	MAY	JUN	JUL	AUG	SEP	OCT	NOV	DEC
8.0	8.4	8.4	8.4	8.4	8.4	8.4	8.4	8.4	8.4	8.4	8.0

OFFICE USE ONLY

SECTION 2

EMITTENT DATA				EMISSIONS
EMITTENT ID	EST METH	ACTUAL EMISSIONS FACTOR(LBS/UNIT)		ANNUAL AVERAGE EMISSIONS (LBS/YR)
1854029 9	7 C	0.0057 C		1.40
CONTROL EQPT CODES PRIMARY	SECONDARY	OVERALL CONTROL EFF(%)	FULL/PART	HOURLY MAX EMISSIONS (LBS/HOUR)
000 C	C	C	C	0.0057

ACTION CODE:

ALLOWABLE EMIS LBS/YR(OPTIONAL):

EMITTENT ID	EST METH	ACTUAL EMISSIONS FACTOR(LBS/UNIT)		ANNUAL AVERAGE EMISSIONS (LBS/YR)
	C	C		
CONTROL EQPT CODES PRIMARY	SECONDARY	OVERALL CONTROL EFF(%)	FULL/PART	HOURLY MAX EMISSIONS (LBS/HOUR)
C	C	C	C	

ACTION CODE:

ALLOWABLE EMIS LBS/YR(OPTIONAL):

NAME Steve Roe DATE 4/18/90

ARB PRC 89032

EMISSION YEAR 19 89

AIR TOXICS EMISSION DATA SYSTEM REVIEW AND UPDATE REPORT
PROCESS AND EMITTENTS DATA

FORM PRO SIDE A

FOR OFFICE USE ONLY

PROCESS DESCRIPTION: C

SCC NO:

COUNTY ID:

AIR BASIN:

ACTION CODE:

PROD1 (OPTIONAL):

PROD2 (OPTIONAL):

FACILITY ID:

STOP FILL OUT ANY SUPPLEMENTAL PROCESS FORM(S) FOR THIS PROCESS FIRST. THEN FILL OUT THIS PAGE. SUBMITTING ONE FOR EACH EMITTING PROCESS IN YOUR FACILITY.

SECTION 1
PROCESS DATA

DEVICE I.D.: 70009

SIC: 3769

CONFIDENTIAL (Y/N) IF Y CHECK SMALL BOXES AS APPROPRIATE: N

PROCESS EQUIPMENT DESCRIPTION: DEGREASER C

FUEL TYPE /OTHER PROCESS INFO: 111-TCA USAGE C

NOTE USE 1 SPACE FOR EACH DECIMAL POINT

TOTAL YEARLY PROCESS RATE (UNITS/YR)	MAXIMUM HOURLY PROCESS RATE (UNITS/HR)	PROCESS UNITS	HRS/ DAY	DAYS/ WEEK	WKS/ YEAR
1560 C	0.39 C	PT 06.8 C	16 C	5 C	50 C

RELATIVE MONTHLY ACTIVITY (%) C

JAN	FEB	MAR	APR	MAY	JUN	JUL	AUG	SEP	OCT	NOV	DEC
8.0	8.4	8.4	8.4	8.4	8.4	8.4	8.4	8.4	8.4	8.4	8.0

OFFICE USE ONLY

SECTION 2

EMITTENT DATA				EMISSIONS
EMITTENT ID	EST METH	ACTUAL EMISSIONS FACTOR(LBS/UNIT)		ANNUAL AVERAGE EMISSIONS (LBS/YR)
71556	7 C	11 C		17113
CONTROL EQPT CODES PRIMARY	SECONDARY	OVERALL CONTROL EFF(%)	FULL/ PART	HOURLY MAX EMISSIONS (LBS/HOUR)
000 C	C	C	C	4.28

ACTION CODE:

ALLOWABLE EMIS LBS/YR(OPTIONAL):

EMITTENT ID	EST METH	ACTUAL EMISSIONS FACTOR(LBS/UNIT)		ANNUAL AVERAGE EMISSIONS (LBS/YR)
	C	C		
CONTROL EQPT CODES PRIMARY	SECONDARY	OVERALL CONTROL EFF(%)	FULL/ PART	HOURLY MAX EMISSIONS (LBS/HOUR)
C	C	C	C	

ACTION CODE:

ALLOWABLE EMIS LBS/YR(OPTIONAL):

NAME Steve Roe DATE 4/18/90

ARB PRC 89032

EMISSION YEAR 19 89

AIR TOXICS EMISSION DATA SYSTEM REVIEW AND UPDATE REPORT
PROCESS AND EMITTENTS DATA

FORM PRO SIDE A

FOR OFFICE USE ONLY

PROCESS DESCRIPTION | SCC NO | COUNTY ID | AIR BASIN

ACTION CODE | PROD1 (OPTIONAL) | PROD2 (OPTIONAL) | FACILITY ID

STOP FILL OUT ANY SUPPLEMENTAL PROCESS FORM(S) FOR THIS PROCESS FIRST. THEN FILL OUT THIS PAGE. SUBMITTING ONE FOR EACH EMITTING PROCESS IN YOUR FACILITY.

SECTION 1
PROCESS DATA

DEVICE I.D.: 7 0 0 1 0

SIC: 3 7 6 9

CONFIDENTIAL (Y/N) IF Y CHECK SMALL BOXES AS APPROPRIATE: N

PROCESS EQUIPMENT DESCRIPTION: V A P O R D E G R E A S E R

FUEL TYPE /OTHER PROCESS INFO: 1 1 1-T C A U S A G E

NOTE USE 1 SPACE FOR EACH DECIMAL POINT

TOTAL YEARLY PROCESS RATE (UNITS/YR)	MAXIMUM HOURLY PROCESS RATE (UNITS/HR)	PROCESS UNITS	HRS/ DAY	DAYS/ WEEK	WKS/ YEAR
1 2 0	0 . 0 3	P T 0 6 8	1 6	5	50

RELATIVE MONTHLY ACTIVITY (%)

JAN	FEB	MAR	APR	MAY	JUN	JUL	AUG	SEP	OCT	NOV	DEC
8.0	8.4	8.4	8.4	8.4	8.4	8.4	8.4	8.4	8.4	8.4	8.0

OFFICE USE ONLY

SECTION 2

EMITTENT DATA				EMISSIONS
EMITTENT ID	EST METH	ACTUAL EMISSIONS FACTOR(LBS/UNIT)		ANNUAL AVERAGE EMISSIONS (LBS/YR)
7 1 5 5 6	7	0 . 9 7		1316
CONTROL EQPT CODES PRIMARY	SECONDARY	OVERALL CONTROL EFF(%)	FULL/ PART	HOURLY MAX EMISSIONS (LBS/HOUR)
0 0 0				0.33

ACTION CODE | ALLOWABLE EMIS LBS/YR(OPTIONAL)

EMITTENT ID	EST METH	ACTUAL EMISSIONS FACTOR(LBS/UNIT)		ANNUAL AVERAGE EMISSIONS (LBS/YR)
CONTROL EQPT CODES PRIMARY	SECONDARY	OVERALL CONTROL EFF(%)	FULL/ PART	HOURLY MAX EMISSIONS (LBS/HOUR)

ACTION CODE | ALLOWABLE EMIS LBS/YR(OPTIONAL)

NAME Steve Roe DATE 4/18/90

ARB PRC 89032

EMISSION YEAR 19 89

AIR TOXICS EMISSION DATA SYSTEM REVIEW AND UPDATE REPORT
PROCESS AND EMITTENTS DATA

FORM PRO SIDE A

FOR OFFICE USE ONLY

PROCESS DESCRIPTION: C

SCC NO:

COUNTY ID:

AIR BASIN:

ACTION CODE:

PROD1 (OPTIONAL):

PROD2 (OPTIONAL):

FACILITY ID:

STOP FILL OUT ANY SUPPLEMENTAL PROCESS FORM(S) FOR THIS PROCESS FIRST. THEN FILL OUT THIS PAGE. SUBMITTING ONE FOR EACH EMITTING PROCESS IN YOUR FACILITY.

SECTION 1
PROCESS DATA

DEVICE I.D.: 7 0 0 1 2

SIC: 3 7 6 9

CONFIDENTIAL (Y/N) IF Y CHECK SMALL BOXES AS APPROPRIATE: N

PROCESS EQUIPMENT DESCRIPTION: C
C O O L I N G T O W E R S

FUEL TYPE /OTHER PROCESS INFO: C
8 T O W E R S

NOTE USE 1 SPACE FOR EACH DECIMAL POINT

TOTAL YEARLY PROCESS RATE (UNITS/YR)	MAXIMUM HOURLY PROCESS RATE (UNITS/HR)	PROCESS UNITS	HRS/ DAY	DAYS/ WEEK	WKS/ YEAR
8 7 6 0 C	C	P T 0 7 0 C	2 4 C	7 C	52 C

RELATIVE MONTHLY ACTIVITY (%) C

JAN	FEB	MAR	APR	MAY	JUN	JUL	AUG	SEP	OCT	NOV	DEC
8.0	8.4	8.4	8.4	8.4	8.4	8.4	8.4	8.4	8.4	8.4	8.0

OFFICE USE ONLY

SECTION 2

EMITTENT DATA				EMISSIONS
EMITTENT ID	EST METH	ACTUAL EMISSIONS FACTOR(LBS/UNIT)		ANNUAL AVERAGE EMISSIONS (LBS/YR)
7 7 8 2 5 0 5	0 9 C	0 . 0 0 7 C		63
CONTROL EQPT CODES PRIMARY	SECONDARY	OVERALL CONTROL EFF(%)	FULL/ PART	HOURLY MAX EMISSIONS (LBS/HOUR)
0 0 0 C	C	C	C	0.018
EMITTENT ID	EST METH	ACTUAL EMISSIONS FACTOR(LBS/UNIT)		ANNUAL AVERAGE EMISSIONS (LBS/YR)
	C	C		
CONTROL EQPT CODES PRIMARY	SECONDARY	OVERALL CONTROL EFF(%)	FULL/ PART	HOURLY MAX EMISSIONS (LBS/HOUR)
C	C	C	C	

ACTION CODE:

ALLOWABLE EMIS LBS/YR(OPTIONAL):

ACTION CODE:

ALLOWABLE EMIS LBS/YR(OPTIONAL):

ARB PRC 89032

NAME Steve Roe DATE 4/18/90

EMISSION YEAR 19__	AIR TOXICS EMISSION DATA SYSTEM REVIEW AND UPDATE REPORT PROCESS AND EMITTENTS DATA	FORM PRO SIDE A

FOR OFFICE USE ONLY

PROCESS DESCRIPTION C | SCC NO | COUNTY ID: | AIR BASIN

ACTION CODE | PROD1 (OPTIONAL) | PROD2 (OPTIONAL) | FACILITY ID:

STOP FILL OUT ANY SUPPLEMENTAL PROCESS FORM(S) FOR THIS PROCESS FIRST. THEN FILL OUT THIS PAGE, SUBMITTING ONE FOR EACH EMITTING PROCESS IN YOUR FACILITY.

SECTION 1 PROCESS DATA

DEVICE I.D. 70015 | SIC 3769 | CONFIDENTIAL (Y/N) IF Y CHECK SMALL BOXES AS APPROPRIATE N

PROCESS EQUIPMENT DESCRIPTION: DEGREASER C

FUEL TYPE /OTHER PROCESS INFO: 111-TCA C

NOTE USE 1 SPACE FOR EACH DECIMAL POINT

TOTAL YEARLY PROCESS RATE (UNITS/YR)	MAXIMUM HOURLY PROCESS RATE (UNITS/HR)	PROCESS UNITS	HRS/DAY	DAYS/WEEK	WKS/YEAR
1350 C	0.24 C	PT 068 C	16 C	7 C	50 C

RELATIVE MONTHLY ACTIVITY (%) C

JAN	FEB	MAR	APR	MAY	JUN	JUL	AUG	SEP	OCT	NOV	DEC
8.0	8.4	8.4	8.4	8.4	8.4	8.4	8.4	8.4	8.4	8.4	8.0

OFFICE USE ONLY

SECTION 2

ACTION CODE	EMITTENT ID	EST METH	ACTUAL EMISSIONS FACTOR(LBS/UNIT)	ANNUAL AVERAGE EMISSIONS (LBS/YR)
	71556	7 C	10.97 C	14810

ALLOWABLE EMIS LBS/YR(OPTIONAL)	*CONTROL EQPT CODES* PRIMARY	SECONDARY	OVERALL CONTROL EFF(%)	FULL/PART	HOURLY MAX EMISSIONS (LBS/HOUR)
	000 C	C	C	C	2.63

ACTION CODE	EMITTENT ID	EST METH	ACTUAL EMISSIONS FACTOR(LBS/UNIT)	ANNUAL AVERAGE EMISSIONS (LBS/YR)
		C	C	

ALLOWABLE EMIS LBS/YR(OPTIONAL)	*CONTROL EQPT CODES* PRIMARY	SECONDARY	OVERALL CONTROL EFF(%)	FULL/PART	HOURLY MAX EMISSIONS (LBS/HOUR)
	C	C	C	C	

NAME Steve Roe DATE 4/18/90

ARB PRC 89032

EMISSION YEAR 19 89

AIR TOXICS EMISSION DATA SYSTEM REVIEW AND UPDATE REPORT
PROCESS AND EMITTENTS DATA

FORM PRO SIDE A

FOR OFFICE USE ONLY

PROCESS DESCRIPTION: C

SCC NO:

COUNTY ID:

AIR BASIN:

ACTION CODE:

PROD1 (OPTIONAL):

PROD2 (OPTIONAL):

FACILITY ID:

STOP FILL OUT ANY SUPPLEMENTAL PROCESS FORM(S) FOR THIS PROCESS FIRST. THEN FILL OUT THIS PAGE, SUBMITTING ONE FOR EACH EMITTING PROCESS IN YOUR FACILITY.

SECTION 1
PROCESS DATA

DEVICE I.D.: 70016

SIC: 3769

CONFIDENTIAL (Y/N) IF Y CHECK SMALL BOXES AS APPROPRIATE: N

PROCESS EQUIPMENT DESCRIPTION: PARTS CLEANER C

FUEL TYPE /OTHER PROCESS INFO: 111-TCA C

NOTE USE 1 SPACE FOR EACH DECIMAL POINT

TOTAL YEARLY PROCESS RATE (UNITS/YR)	MAXIMUM HOURLY PROCESS RATE (UNITS/HR)	PROCESS UNITS	HRS/ DAY	DAYS/ WEEK	WKS/ YEAR
1620 C	0.29 C	PT 0.68 C	16 C	7 C	50 C

RELATIVE MONTHLY ACTIVITY (%) C

JAN	FEB	MAR	APR	MAY	JUN	JUL	AUG	SEP	OCT	NOV	DEC
8.0	8.4	8.4	8.4	8.4	8.4	8.4	8.4	8.4	8.4	8.4	8.0

OFFICE USE ONLY

SECTION 2

EMITTENT DATA					EMISSIONS
ACTION CODE	EMITTENT ID	EST METH	ACTUAL EMISSIONS FACTOR(LBS/UNIT)		ANNUAL AVERAGE EMISSIONS (LBS/YR)
	71556	7 C	10.97 C		17771
ALLOWABLE EMIS LBS/YR(OPTIONAL)	*CONTROL EQPT CODES* PRIMARY	SECONDARY	OVERALL CONTROL EFF(%)	FULL/ PART	HOURLY MAX EMISSIONS (LBS/HOUR)
	000 C	C	C	C	3.18
ACTION CODE	EMITTENT ID	EST METH	ACTUAL EMISSIONS FACTOR(LBS/UNIT)		ANNUAL AVERAGE EMISSIONS (LBS/YR)
		C	C		
ALLOWABLE EMIS LBS/YR(OPTIONAL)	*CONTROL EQPT CODES* PRIMARY	SECONDARY	OVERALL CONTROL EFF(%)	FULL/ PART	HOURLY MAX EMISSIONS (LBS/HOUR)
	C	C	C	C	

NAME Steve Roe DATE 4/18/90

ARB PRC 89012

EMISSION YEAR 19 89

AIR TOXICS EMISSION DATA SYSTEM REVIEW AND UPDATE REPORT
PROCESS AND EMITTENTS DATA

FORM PRO SIDE A

FOR OFFICE USE ONLY

PROCESS DESCRIPTION: | C

SCC NO:

COUNTY ID:

AIR BASIN:

ACTION CODE:

PROD1 (OPTIONAL):

PROD2 (OPTIONAL):

FACILITY ID:

STOP FILL OUT ANY SUPPLEMENTAL PROCESS FORM(S) FOR THIS PROCESS FIRST. THEN FILL OUT THIS PAGE. SUBMITTING ONE FOR EACH EMITTING PROCESS IN YOUR FACILITY.

SECTION 1
PROCESS DATA

DEVICE I.D.: 7 0 0 1 7

SIC: 3 7 6 9

CONFIDENTIAL (Y/N) IF Y CHECK SMALL BOXES AS APPROPRIATE: N

PROCESS EQUIPMENT DESCRIPTION: C O O L I N G T O W E R S | C

FUEL TYPE /OTHER PROCESS INFO: 4 T O W E R S | C

NOTE USE 1 SPACE FOR EACH DECIMAL POINT

TOTAL YEARLY PROCESS RATE (UNITS/YR)	MAXIMUM HOURLY PROCESS RATE (UNITS/HR)	PROCESS UNITS	HRS/ DAY	DAYS/ WEEK	WKS/ YEAR
8 7 6 0	1	P T 0 7 0	16	7	50

RELATIVE MONTHLY ACTIVITY (%) C

JAN	FEB	MAR	APR	MAY	JUN	JUL	AUG	SEP	OCT	NOV	DEC
8.0	8.4	8.4	8.4	8.4	8.4	8.4	8.4	8.4	8.4	8.4	8.0

OFFICE USE ONLY

SECTION 2

ACTION CODE	EMITTENT ID	EST METH	ACTUAL EMISSIONS FACTOR(LBS/UNIT)	ANNUAL AVERAGE EMISSIONS (LBS/YR)	ALLOWABLE EMIS LBS/YR(OPTIONAL)	*CONTROL EQPT CODES* PRIMARY	SECONDARY	OVERALL CONTROL EFF(%)	FULL/ PART	HOURLY MAX EMISSIONS (LBS/HOUR)
	7 7 8 2 5 0 5	09	0 . 0 0 5	42		0 0 0				0.012

NAME Steve Roe DATE 4/18/90

ARB.PRC 89032

EMISSION YEAR 19 89

AIR TOXICS EMISSION DATA SYSTEM REVIEW AND UPDATE REPORT
PROCESS AND EMITTENTS DATA

FORM PRO SIDE A

FOR OFFICE USE ONLY

PROCESS DESCRIPTION: C

SCC NO:

COUNTY ID:

AIR BASIN:

ACTION CODE:

PROD1 (OPTIONAL):

PROD2 (OPTIONAL):

FACILITY ID:

STOP FILL OUT ANY SUPPLEMENTAL PROCESS FORM(S) FOR THIS PROCESS FIRST. THEN FILL OUT THIS PAGE, SUBMITTING ONE FOR EACH EMITTING PROCESS IN YOUR FACILITY.

SECTION 1
PROCESS DATA

DEVICE I.D.: 70021

SIC: 3769

CONFIDENTIAL (Y/N) IF Y CHECK SMALL BOXES AS APPROPRIATE: N

PROCESS EQUIPMENT DESCRIPTION: DEGREASER C

FUEL TYPE /OTHER PROCESS INFO: FREON C

NOTE USE 1 SPACE FOR EACH DECIMAL POINT

TOTAL YEARLY PROCESS RATE (UNITS/YR)	MAXIMUM HOURLY PROCESS RATE (UNITS/HR)	PROCESS UNITS	HRS/ DAY	DAYS/ WEEK	WKS/ YEAR
63 C	0.13 C	PT068 C	2 C	5 C	50 C

RELATIVE MONTHLY ACTIVITY (%) C

JAN	FEB	MAR	APR	MAY	JUN	JUL	AUG	SEP	OCT	NOV	DEC
8.0	8.4	8.4	8.4	8.4	8.4	8.4	8.4	8.4	8.4	8.4	8.0

OFFICE USE ONLY

SECTION 2

EMITTENT DATA					EMISSIONS
EMITTENT ID	EST METH	ACTUAL EMISSIONS FACTOR(LBS/UNIT)			ANNUAL AVERAGE EMISSIONS (LBS/YR)
1105	7 C	6.31 C			99.4
CONTROL EQPT CODES PRIMARY	SECONDARY	OVERALL CONTROL EFF(%)	FULL/ PART		HOURLY MAX EMISSIONS (LBS/HOUR)
000 C	C	C	C		0.21
EMITTENT ID	EST METH	ACTUAL EMISSIONS FACTOR(LBS/UNIT)			ANNUAL AVERAGE EMISSIONS (LBS/YR)
71556	07 C	1.58 C			398
CONTROL EQPT CODES PRIMARY	SECONDARY	OVERALL CONTROL EFF(%)	FULL/ PART		HOURLY MAX EMISSIONS (LBS/HOUR)
000 C	C	C	C		0.82

ACTION CODE

ALLOWABLE EMIS LBS/YR(OPTIONAL)

NAME Steve Roe DATE 4/18/90

ARB PRC 89032

V. SUPPLEMENTAL PROCESS PARAMETER FORMS

EMISSION YEAR 19 89	AIR TOXICS EMISSION DATA SYSTEM REVIEW & UPDATE REPORT SUPPLEMENTAL PROCESS PARAMETER FORM SUBSTANCES USED, PRODUCED, OR OTHERWISE PRESENT	FORM S-UP

FACILITY NAME Allied-Signal

FOR OFFICE USE ONLY
CO: 1 AB:
FACID:

PLEASE COPY THIS FORM AS MANY TIMES AS NECESSARY FOR YOUR FACILITY.
PLEASE READ THE INSTRUCTIONS BEFORE COMPLETING THIS FORM.

USE THIS FORM TO REPORT SUBSTANCES IN APPENDIX A-II WHICH ARE USED, PRODUCED, OR OTHERWISE PRESENT.

PLEASE INDICATE (Y/N) UNDER THE APPROPRIATE CATEGORIES USE, PRODUCTION, OR OTHER PRESENCE WITHIN YOUR FACILITY OF ANY SUBSTANCE LISTED IN APPENDIX A-II. "USED" REFERS TO SUBSTANCES WHICH ARE INGREDIENTS IN ANY ACTIVITY OR PROCESS AT YOUR FACILITY. "PRODUCED" REFERS TO SUBSTANCES WHICH ARE THE RESULT OF ANY ACTIVITY OR PROCESS TAKING PLACE IN YOUR FACILITY. "OTHERWISE PRESENT" REFERS TO SUBSTANCES PRESENT IN ANY OTHER WAY IN AN ACTIVITY OR PROCESS, SUCH AS BY-PRODUCTS OR REACTION INTERMEDIATES WHICH APPEAR TEMPORARILY DURING PROCESSING. PLEASE SPECIFY THE NATURE OF THE PRESENCE OF THE SUBSTANCE.

ALSO USE THIS FORM TO REPORT SUBSTANCES IN APPENDIX A-I WHICH ARE PRESENT BELOW THE APPLICABLE DEGREE OF ACCURACY.

LISTED SUBSTANCE	USED	PRODUCED	OTHERWISE PRESENT	(SPECIFY)
Lead	(Y)	(N)	(N)	Flow solder and solder pots
Cadmium	(Y)	(N)	(N)	Cadmium plating
Hydrochloric acid	(Y)	(N)	(N)	HCL tank
Copper	(Y)	(N)	(N)	Copper plating
Mineral oils	(N)	(N)	(Y)	Oil Quench
Silica	(Y)	(N)	(N)	Glass bead blaster
Zinc	(Y)	(N)	(N)	Paint spray booths
Benzene	(N)	(Y)	(N)	Paint baking oven
Formaldehyde	(N)	(Y)	(N)	Paint baking oven
Toluene	(N)	(Y)	(N)	Paint baking oven
Carbon black	(Y)	(N)	(N)	Paint spray booth
Sodium hydroxide	(Y)	(N)	(N)	Plating
Xylenes	(Y)	(N)	(N)	Paint spray booth
Methylene chloride	(Y)	(N)	(N)	Paint spray booth
Manganese	(Y)	(N)	(N)	Paint spray booth
Glycol ethers	(Y)	(N)	(N)	Paint spray booth

NAME: Steve Roe DATE: 4-18-90

ARB S-UP 89-89

EMISSION YEAR 19 89	AIR TOXICS EMISSION DATA SYSTEM REVIEW & UPDATE REPORT SUPPLEMENTAL PROCESS PARAMETER FORM METAL PLATING	FORM S-MP

FOR OFFICE USE ONLY
CO: AB:
FACID:
SCC:

COMPANY NAME Allied-Signal Aerospace Co.

DEVICE ID: 7 0 0 0 1

PLEASE COPY THIS FORM AS MANY TIMES AS NECESSARY FOR YOUR FACILITY.
PLEASE READ THE INSTRUCTIONS BEFORE COMPLETING THIS FORM.

GENERAL INFORMATION:

TYPE OF PLATING: X *CHROME* *TYPE OF CHROME PLATING:* X *HARD PLATING*
___ *NICKEL* ___ *ANODIZING*
___ *CADMIUM* ___ *DECORATIVE*

TANK INFORMATION:

CURRENT *(TYPICAL OPERATING COND.):* 1 5 0 0 *AMPS* *(MAX. OPER. COND.):* 3 6 0 0 *AMPS*

OTHER INGREDIENTS: ___ % CYANIDE ___ % HYDROCHLORIC ACID ___ % HYDROFLUORIC ACID

AGITATION: ___ AIR JETS ___ CFM.
___ IMPELLER
X OTHER (SPECIFY) circulating pumps

REPORT EMISSIONS IN SECTION 2 OF CORE FORM PRO

NAME: Steve Roe *DATE:* 4/18/90 ARB/S-MP/89087

EMISSION YEAR 19 89	AIR TOXICS EMISSION DATA SYSTEM REVIEW & UPDATE REPORT SUPPLEMENTAL PROCESS PARAMETER FORM METAL PLATING	FORM S-MP

FOR OFFICE USE ONLY
CO: AB:
FACID:
SCC:

COMPANY NAME Allied-Signal Aerospace Co.

DEVICE ID: 7 0 0 0 2

PLEASE COPY THIS FORM AS MANY TIMES AS NECESSARY FOR YOUR FACILITY
PLEASE READ THE INSTRUCTIONS BEFORE COMPLETING THIS FORM.

GENERAL INFORMATION:

TYPE OF PLATING: X *CHROME* *TYPE OF CHROME PLATING:* ____ *HARD PLATING*
____ *NICKEL* X *ANODIZING*
____ *CADMIUM* ____ *DECORATIVE*

TANK INFORMATION:

CURRENT *(TYPICAL OPERATING COND.):* 8 *AMPS* *(MAX. OPER. COND.):* 8 *AMPS*

OTHER INGREDIENTS: ____ % CYANIDE ____ % HYDROCHLORIC ACID ____ % HYDROFLUORIC ACID

AGITATION: X AIR JETS 400 CFM.
____ IMPELLER
____ OTHER (SPECIFY) ____

REPORT EMISSIONS IN SECTION 2 OF CORE FORM PRO

NAME: Steve Roe *DATE:* 4/18/90 ARB/S-MP/89087

EMISSION YEAR 19 89	AIR TOXICS EMISSION DATA SYSTEM REVIEW & UPDATE REPORT SUPPLEMENTAL PROCESS PARAMETER FORM COOLING TOWER	FORM S-CT

FOR OFFICE USE ONLY
CO: AB:
FACID:
SCC:

COMPANY NAME Allied-Signal Aerospace Co.

DEVICE ID: 70012

PLEASE COPY THIS FORM AS MANY TIMES AS NECESSARY FOR YOUR FACILITY
PLEASE READ THE INSTRUCTIONS BEFORE COMPLETING THIS FORM.

1. DEVICE INFORMATION (8 Towers)

DESIGN DRIFT FRACTION (MFR. SPEC.): 0.02 GPM DRIFT/GPM THROUGHPUT

TOWER DESIGN:
___ OPEN CIRCUIT
___ CLOSED CIRCUIT
___ EVAPORATIVE CONDENSER
___ FORCED DRAFT
___ COUNTERFLOW
X CROSSFLOW

2. PROCESS INFORMATION

RATED COOLING CAPACITY (TONS): 300

AVERAGE: WATER FLOW (GPM): 600 MAXIMUM: WATER FLOW (GPM): 1500

TOWER APPLICATION:
X PROCESS COOLING
___ BUILDING HVAC
___ REFRIGERATION

3. EMITTENT INFORMATION:

WATER TREATMENT CHEMICAL	CONCENTRATION IN WATER (PPMW) AVERAGE	MAXIMUM
CHROMATE		
CHLORINE	0.2	0.2
SODIUM HYDROXIDE		
ZINC		
BROMINE		

REPORT EMISSIONS IN SECTION 2 OF CORE FORM PRO

NAME: Steve Roe DATE: 4/18/90

ARB S-CT 89087

EMISSION YEAR 19 89

AIR TOXICS EMISSION DATA SYSTEM REVIEW & UPDATE REPORT
SUPPLEMENTAL PROCESS PARAMETER FORM
COOLING TOWER

FORM **S-CT**

FOR OFFICE USE ONLY
CO: AB:
FACID:
SCC:

COMPANY NAME Allied-Signal Aerospace Co.

DEVICE ID: 70017

PLEASE COPY THIS FORM AS MANY TIMES AS NECESSARY FOR YOUR FACILITY
PLEASE READ THE INSTRUCTIONS BEFORE COMPLETING THIS FORM.

1. DEVICE INFORMATION (4 Towers)

DESIGN DRIFT FRACTION (MFR. SPEC.): 0.02 GPM DRIFT/GPM THROUGHPUT

TOWER DESIGN:
- ___ OPEN CIRCUIT
- ___ CLOSED CIRCUIT
- ___ EVAPORATIVE CONDENSER
- ___ FORCED DRAFT
- ___ COUNTERFLOW
- X CROSSFLOW

2. PROCESS INFORMATION

RATED COOLING CAPACITY (TONS): 300

AVERAGE: WATER FLOW (GPM): 600 MAXIMUM: WATER FLOW (GPM): 1500

TOWER APPLICATION:
- X PROCESS COOLING
- ___ BUILDING HVAC
- ___ REFRIGERATION

3. EMITTENT INFORMATION:

WATER TREATMENT CHEMICAL	CONCENTRATION IN WATER (PPMW) AVERAGE	MAXIMUM
CHROMATE		
CHLORINE	0.2	0.2
SODIUM HYDROXIDE		
ZINC		
BROMINE		

REPORT EMISSIONS IN SECTION 2 OF CORE FORM PRO

NAME: Steve Roe DATE: 4/18/90

ARB S-C 89087

VI. FACILITY DIAGRAM AND PLOT PLAN

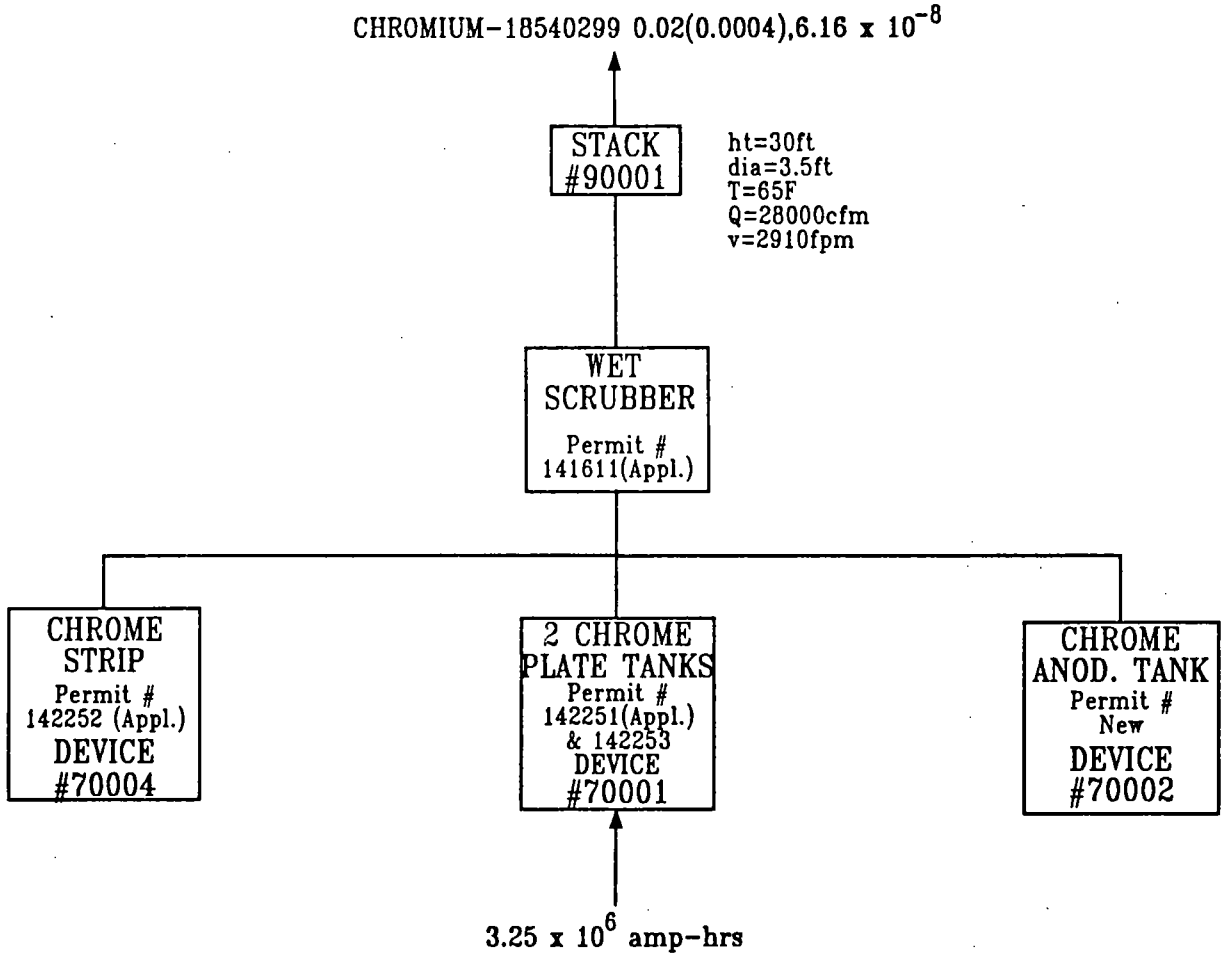

* Annual(Hourly),Emission Factor lb/yr(lb/hr),lb/hr

NR = not reportable

ALLIED SIGNAL	
Operation HEAT TREAT/PLATING	Date 4/90
Prepared by DYNAMAC CORPORATION	

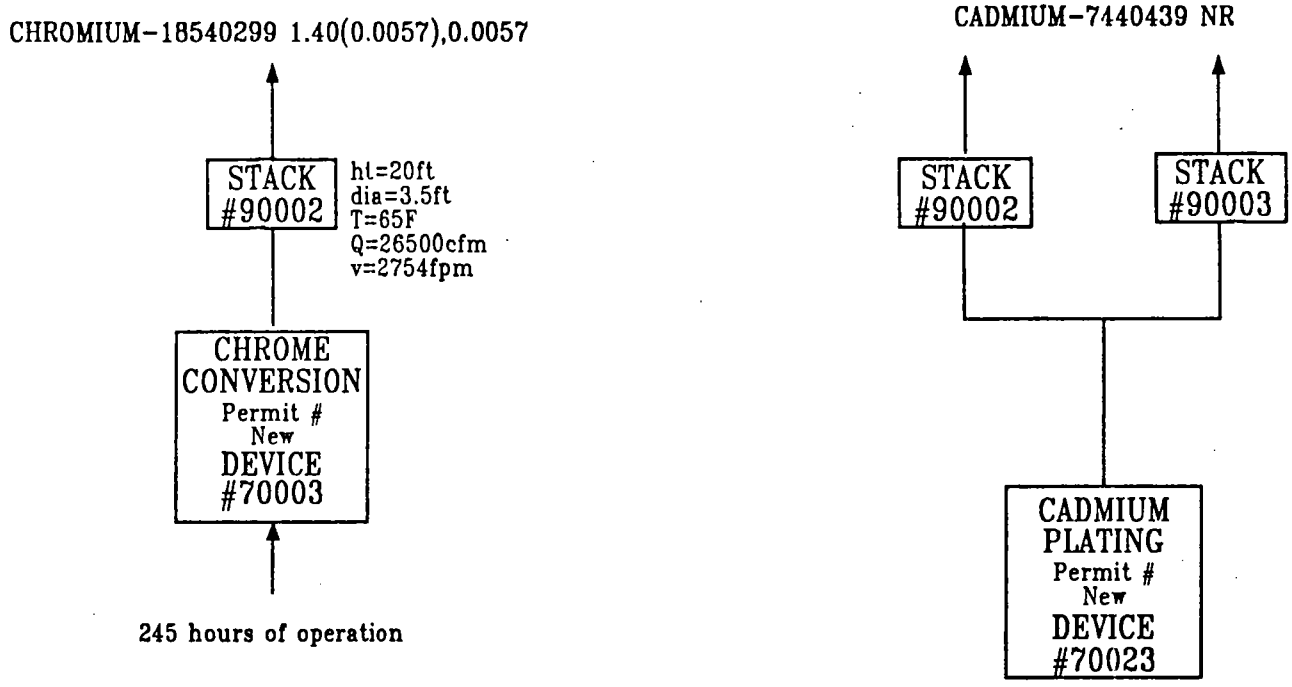

* Annual(Hourly),Emission Factor lb/yr(lb/hr),lb/hr

NR = not reportable

ALLIED SIGNAL	
Operation HEAT TREAT/PLATING	Date 4/90
Prepared by DYNAMAC CORPORATION	

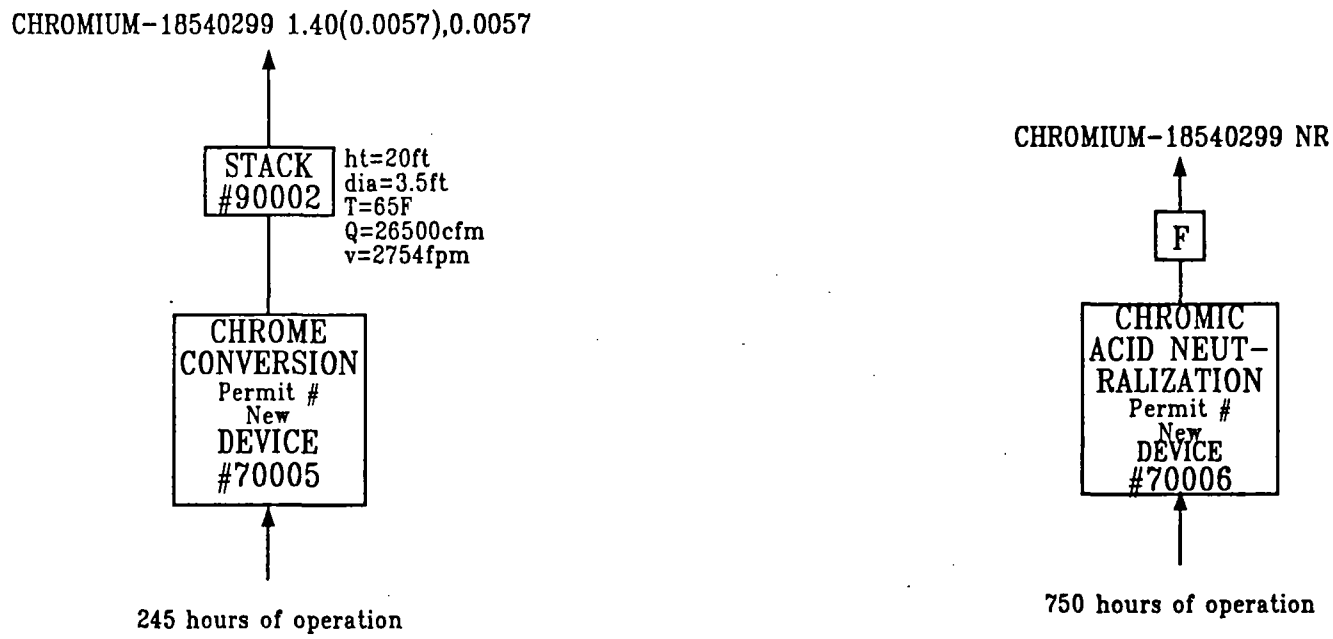

* Annual(Hourly),Emission Factor
lb/yr(lb/hr),lb/hr

NR = not reportable

ALLIED SIGNAL	
Operation HEAT TREAT/PLATING	Date 4/90
Prepared by DYNAMAC CORPORATION	

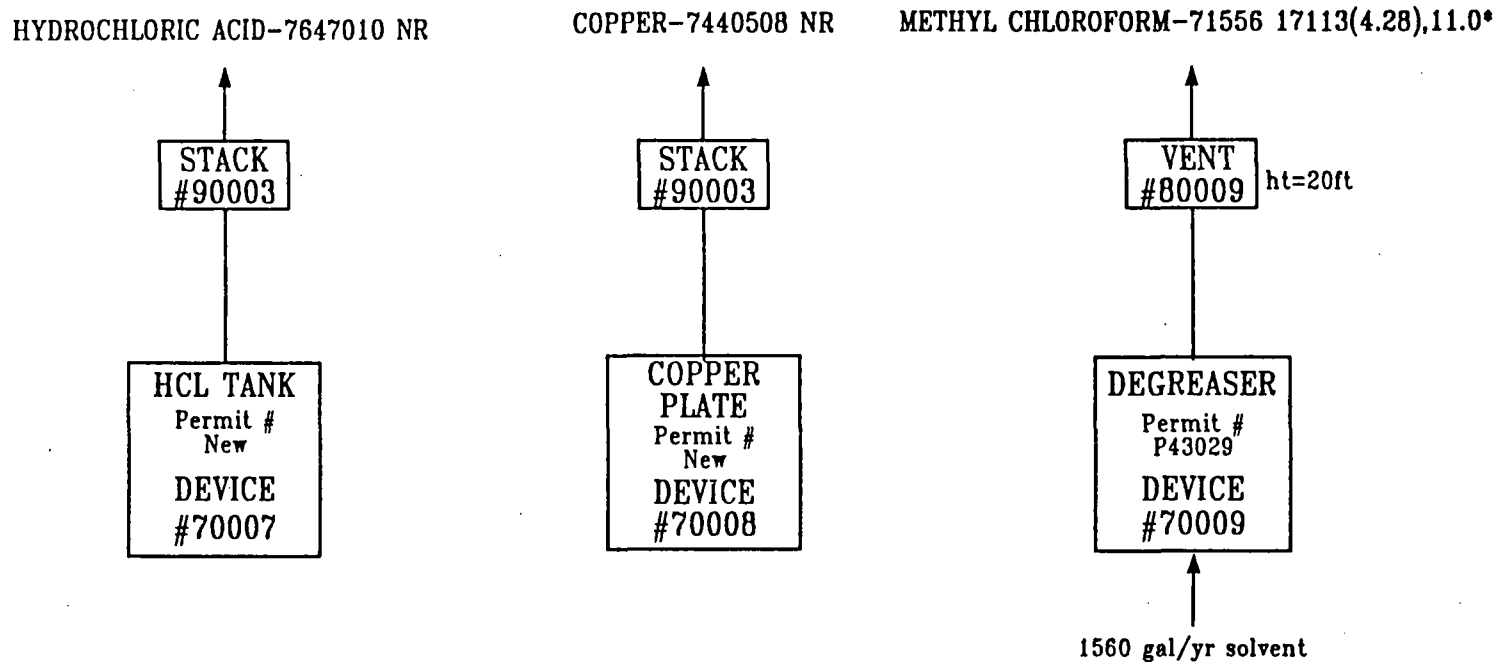

* Annual(Hourly),Emission Factor lb/yr(lb/hr),lb/hr

NR = not reportable

ALLIED SIGNAL	
Operation HEAT TREAT/PLATING	Date 4/90
Prepared by DYNAMAC CORPORATION	

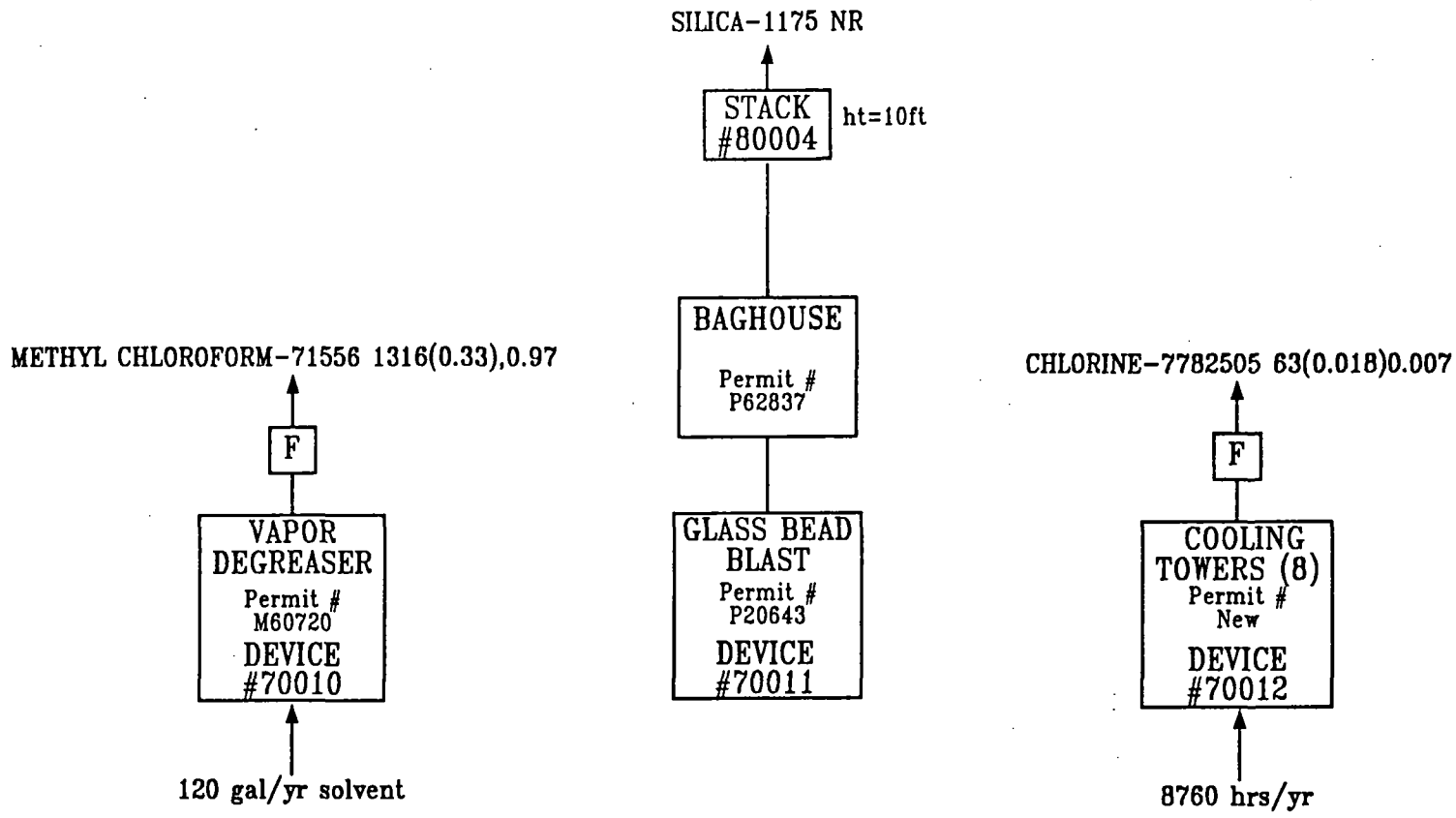

* Annual(Hourly),Emission Factor lb/yr(lb/hr),lb/hr

NR = not reportable

ALLIED SIGNAL	
Operation HEAT TREAT/PLATING	Date 4/90
Prepared by DYNAMAC CORPORATION	

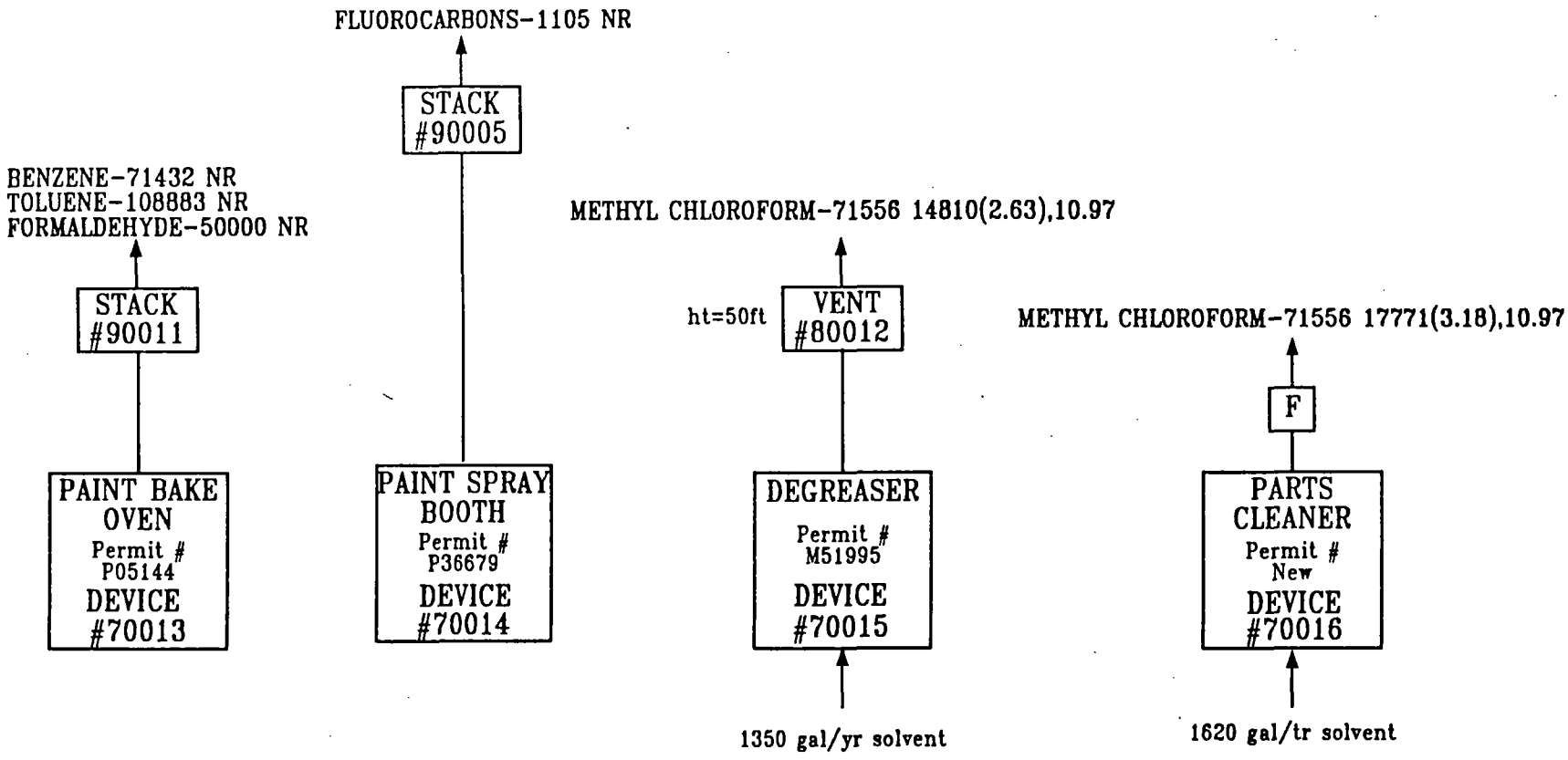

* Annual(Hourly),Emission Factor
lb/yr(lb/hr),lb/hr
NR = not reportable

ALLIED SIGNAL	
Operation HYDRAULIC ASSEMBLY	Date 4/90
Prepared by DYNAMAC CORPORATION	

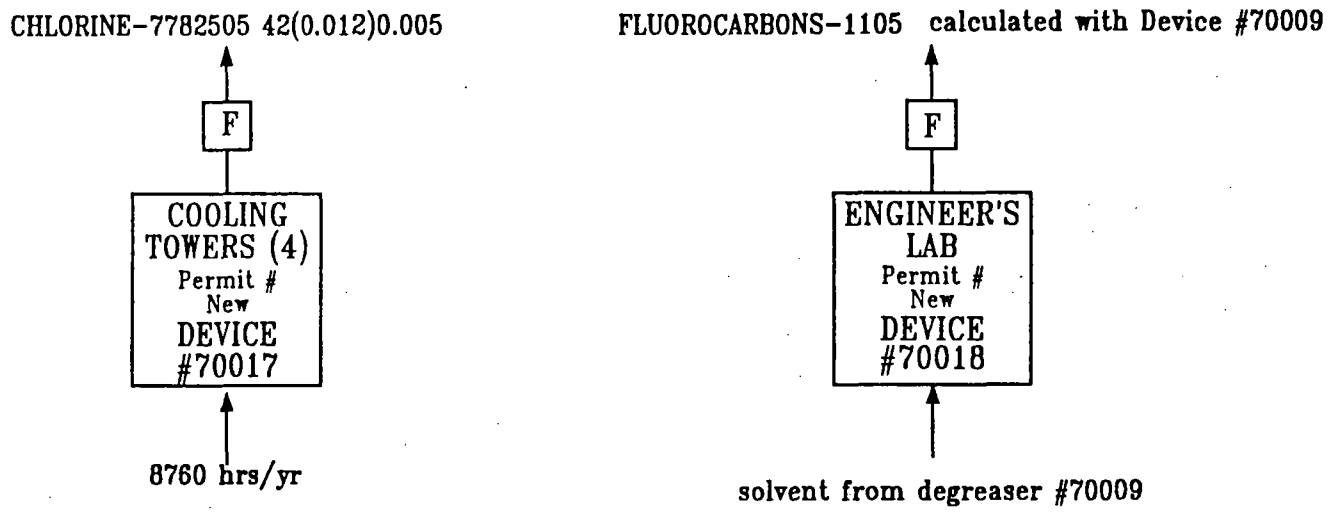

* Annual(Hourly),Emission Factor
lb/yr(lb/hr),lb/hr
NR = not reportable

ALLIED SIGNAL	
Operation SKYDROL & ENGINEERING	Date 4/90
Prepared by DYNAMAC CORPORATION	

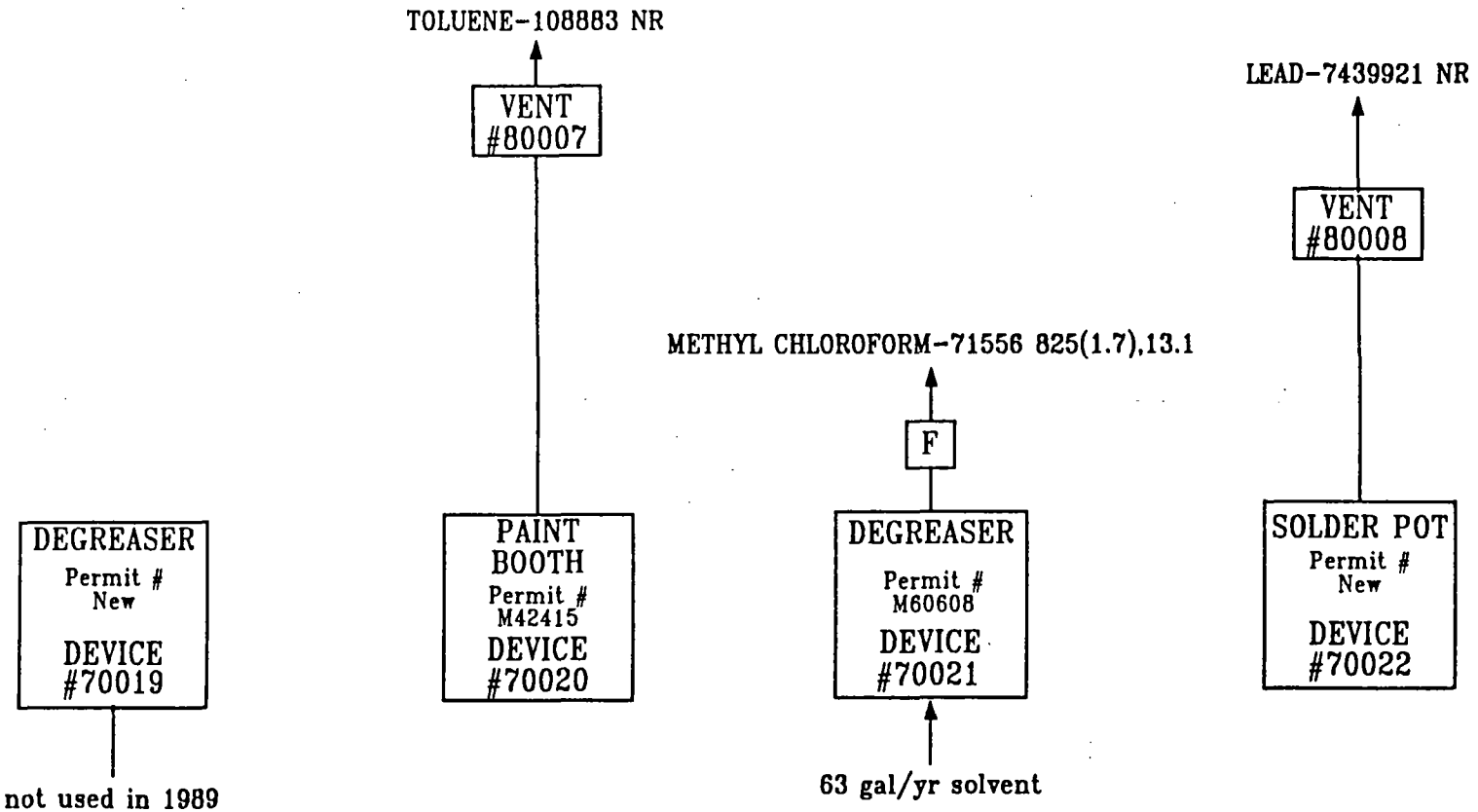

* Annual(Hourly),Emission Factor lb/yr(lb/hr),lb/hr
NR = not reportable

ALLIED SIGNAL	
Operation ELECTRONIC ASSEMBLY	Date 4/90
Prepared by DYNAMAC CORPORATION	

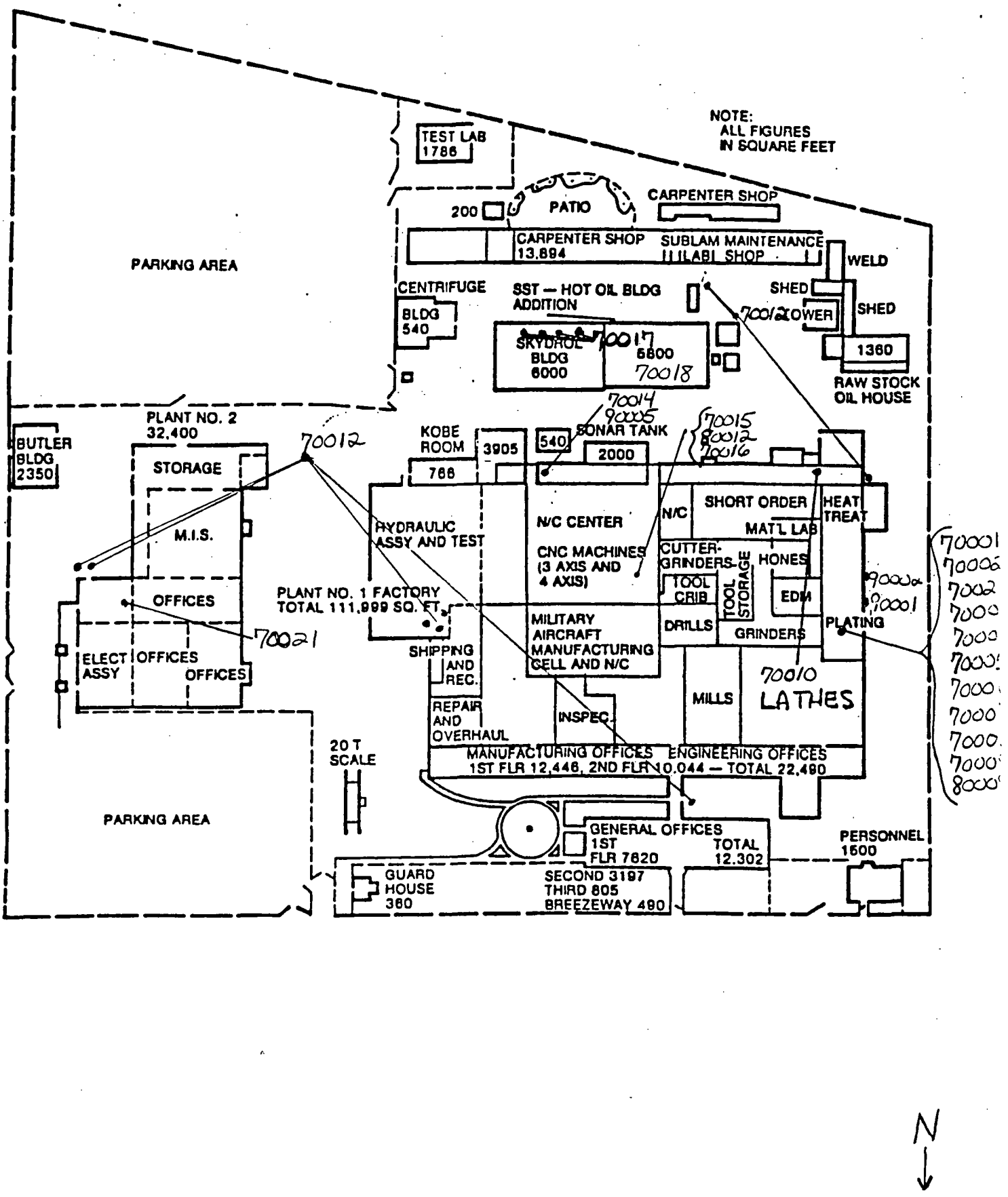
NOTE:
ALL FIGURES
IN SQUARE FEET
TEST LAB
1786
PATIO
200
CARPENTER SHOP
CARPENTER SHOP
13,894
SUBLAM MAINTENANCE
LAB SHOP
WELD
PARKING AREA
CENTRIFUGE
BLDG
540
SST — HOT OIL BLDG
ADDITION
SHED
SHED
70012
TOWER
SKYDROL
BLDG
6000
70017
5800
70018
1360
RAW STOCK
OIL HOUSE
70014
90005
SONAR TANK
70015
80012
70016
PLANT NO. 2
32,400
BUTLER
BLDG
2350
70012
KOBE
ROOM
3905
540
2000
STORAGE
766
M.I.S.
HYDRAULIC
ASSY AND TEST
N/C CENTER
N/C
SHORT ORDER
HEAT
TREAT
MAT'L LAB
CNC MACHINES
(3 AXIS AND
4 AXIS)
CUTTER-
GRINDERS
HONES
TOOL
CRIB
TOOL
STORAGE
EDM
OFFICES
PLANT NO. 1 FACTORY
TOTAL 111,999 SQ. FT.
MILITARY
AIRCRAFT
MANUFACTURING
CELL AND N/C
DRILLS
GRINDERS
PLATING
70021
ELECT
ASSY
OFFICES
OFFICES
SHIPPING
AND
REC.
70010
LATHES
MILLS
REPAIR
AND
OVERHAUL
INSPEC.
20 T
SCALE
MANUFACTURING OFFICES
1ST FLR 12,446, 2ND FLR 10,044 — TOTAL 22,490
ENGINEERING OFFICES
PARKING AREA
GENERAL OFFICES
1ST
FLR 7620
TOTAL
12,302
PERSONNEL
1500
GUARD
HOUSE
360
SECOND 3197
THIRD 805
BREEZEWAY 490
N

APPENDIX A

EMISSION CALCULATIONS

SOLVENT USAGE WORKSHEET

Device	Product	Emittent	[1] Weight Fraction	[2] Density lb/gal	[3] Annual Use gal/yr	[4] Hourly Use gal/hr	[5] AAE lb/yr	[6] MHE lb/hr	[7] EF lb/gal
70009	methyl chloroform	methyl chloroform	1	10.97	1560	0.39	17113.2	4.2783	10.97
70010	methyl chloroform	methyl chloroform	1	10.97	120	0.03	1316.4	0.3291	10.97
70015	methyl chloroform	methyl chloroform	1	10.97	1350	0.24	14809.5	2.6328	10.97
70016	methyl chloroform	methyl chloroform	1	10.97	1620	0.29	17771.4	3.1813	10.97
70021	Kester Freon	methyl chloroform	0.6	10.52	63	0.13	397.656	0.82056	6.312
	TOTAL				4650	0.95	51010.5	10.4215	
70021	Kester Freon	fluorocarbons	0.15	10.52	63	0.13	99.414	0.20514	1.578

CALCULATIONS:

Average Annual Emissions (AAE)= [1]x[2]x[3]= [5]

Maximum Hourly Emissions (MHE)= [1]x[2]x[4]= [6]

Emission Factor (EF)= [1]x[2]= [7]

COATING EMISSIONS WORKSHEET

Device	Product	Emittent	[1] Weight Fraction	[2] Density lb/gal	[3] Annual Use gal/yr	[4] Hourly Use gal/hr	[5] AAE lb/yr	[6] MHE lb/hr	[7] EF lb/gal
70014	MIL-L-81352A	108883	0.25	7.5	0.25	0.05	0.46875	0.09375	1.875
	MIL-C-83286	108883	0.1	7.5	1	0.1	0.75	0.075	0.75
	PT-1002	108883	0.25	7	0.84	0.05	1.47	0.0875	1.75
	MIL-P-2377	108883	0.1	7.5	1.3	0.1	0.975	0.075	0.75
	MIL-L-19538	108883	0.1	7.5	2	0.1	1.5	0.075	0.75
	TOLUENE	108883	1	7.51	0.22	0.05	1.6522	0.3755	7.51
	LCM-37-1035A	108883	0.1	7.5	0.11	0.05	0.0825	0.0375	0.75
	49596	108883	0.15	5.6	2.5	0.1	2.1	0.084	0.84
	83430A	108883	0.25	14.9	0.81	0.05	3.01725	0.18625	3.725
	KOROPON PRIMER	108883	0.1	10.51	0.31	0.05	0.32581	0.05255	1.051
	443-3-320	108883	0.25	8.48	0.03	0.01	0.0636	0.0212	2.12
	PT-113	108883	0.102	7.8	1	0.1	0.7956	0.07956	0.7956
				TOTAL	10.37		13.20071	1.24281	NR

CALCULATIONS:

Average Annual Emissions (AAE)= [1] x [2] x [3] = [5]

Maximum Hourly Emissions (MHE)= [1] x [2] x [4]= [6]

Device Name: CHROME PLATING TANK (2 TANKS)

Device ID: 70001

Emission Calculations: Chrome VI

Emission Factor = EF = 0.028 mg/amp-hr
* from attached source test

Max hourly emissions = 186.7 mg/hr
* from attached source test = .00041 lb/hr

Annual emissions

$$\frac{.028}{1000 \cdot 454} = 6.16 \times 10^{-8} \text{ lb/amp}$$

6.16×10^{-8} lb/amp x 3.25×10^{6} amp/yr x = 0.2 lb/yr

Average amp hours $\frac{3.25 \times 10^{6}}{.7 \cdot 50}$ = 844 amp/hr

Device Name: CHROMIC ACID ANODIZING TANK

Device ID: 70002

Emission Calculations:

Emissions Quantified with Device 70001.

Device Name: CHROME CONVERSION

Device ID: 70003

Emission Calculations: Chrome VI

EF = 0.0019 lb/hr/ft^2

MHE = 0.0019 lb/hr/ft^2 x 3 ft^2 = 0.0057 lb/hr

AAE = 0.0057 lb/hr x .7 hr/day x 350 day/yr = 1.40 lb/yr

Adjusted EF $\frac{1.53 \text{ lb/yr}}{270 \text{ hr/yr}}$ = 0.00566 lb/hr

Device Name: CHROME STRIP

Device ID: 70004

Emission Calculations:

Included in source test for Device 70001.

Device Name: CHROME CONVERSION (DOUGLAS)

Device ID: 70005

Emission Calculations: Chrome VI

EPA EF = 0.0019 lb/hr/ft^2

MHE = 0.0019 lb/hr/ft^2 x 3 ft^2 = 0.0057 lb/hr

AAE = 0.0057 lb/hr x .7 hr/day x 350 day/yr = 1.40 lb/yr

$$\text{Adjusted EF} = \frac{1.40 \text{ lb/yr}}{245 \text{ hr/yr}} = 0.0057 \text{ lb/hr}$$

Device Name: CHROMIC ACID NEUTRALIZATION

Device ID: 70006

Emission Calculations:

Engineering judgment dictates that the use of an emission factor for anodizing is not appropriate for quantifying emissions from this device (no electricity is used). Further, no mechanism exists for air releases of hexavalent chrome from this device. Hence, the emissions are assumed to be zero.

Device Name: HCL TANK

Device ID: 70007

Emission Calculations: Hydrochloric Acid

MHE = (P_{HCL})(Tank Area)(Evaporation rate of H_2O)/760 mm Hg

MHE = (0.00076 mm Hg)(3 ft^2)(0.037 lb/ft^2-hr)/760 mm Hg = 1.11×10^{-7} lb/hr

AAE = MHE x DOP x HOP = 1.11×10^{-7} lb/hr x 8760 lb/yr = 0.00093 lb/yr

Emission level is below the reportable limit; hydrochloric acid will be shown as "otherwise present" on Form S-UP.

Device Name: COPPER PLATING TANK

Device ID: 70008

Emission Calculations: Copper

$EF = 2.86 \times 10^{-6}$

$$MHE = 2.86 \times 10^{-6} \text{ lb/amp-hr} \times 50 \text{ amps}_{(max)} \times \frac{63.546}{51.996} = 0.0017 \text{ lb/hr}$$

$$AAE = 2.86 \times 10^{-6} \text{ lb/amp-hr} \times 20 \text{ amps}_{(average)} \times \frac{63.546}{51.996} \times 16 \text{ hr/day} \times 250 \text{ day/hr}$$

$$= 0.28 \text{ lb/yr}$$

Emission level is below the reportable limit; copper will be shown as "otherwise present" on Form S-UP.

Device Name: DEGREASER

Device ID: 70009

Emission Calculations:

Emission calculation on solvent usage worksheet.

Methyl Chloroform

AAE = 17113.2 lb/yr

MHE = 4.3 lb/yr

Device Name: ULTRASONIC VAPOR DEGREASER

Device ID: 70010

Emission Calculations:

Emission calculation on solvent usage worksheet.

Methyl Chloroform

AAE = 1316.4 lb/yr

MHE = 0.33 lb/yr

Device Name: GLASS BEAD BLASTER

Device ID: 70011

Emission Calculations: Silica

25 lbs material day/16 hrs/day = 1.56 lb/hr

MHE = hourly rate x 0.01 = 1.56 lbs/hr x 0.01 = 0.0156 lb/hr

AAE = 4800 hr/yr x 1.56 lb/hr x 0.01 = 74.88 lb/yr

The annual emission level for silica is below the reporting requirements. Silica will be reported as "otherwise present" on Form S-UP.

Device Name: COOLING TOWERS (6)

Device ID: 70012

Emission Calculations: Chlorine

Six working cooling towers - CG concentration = 0.2 ppmw.

MHE = (DF)(WR)(CO)(OF)(6 towers)(8.33 lb/gal)(60 min/hr)(1/10^6 ppmw)
= (.02)(1500)(0.2)(1)(6)(8.33)(60)/10^6 = 0.018 lb/hr

AAE = [(.02)(600)(0.2)(1)(6)(8.33)(60)/10^6](8760 hrs/yr) = 63 lbs/yr

Device Name: PAINT BAKING OVEN

Device ID: 70013

Emission Calculations:

EPA EF = $\frac{5.2 \text{ lbs}}{10^6 \text{ ft}^3}$ Rating = 100,000 BTU/hr x 1 ft^2/1050 BTU = 95.2 ft^3/hr

AAE = 95.2 ft^3/hr x 20 hr/mo x $\frac{5.8 \text{ lb}}{10^6 ft^3}$ x 12 mo/yr x .04 = 0.0053 lb/yr Benzene

95.2 ft^3/hr x 20 hr/mo x $\frac{5.8 \text{ lb}}{10^6 ft^3}$ x 12 mo/yr x .02 = .00265 lb/yr Toluene

95.2 ft^3/hr x 20 hr/mo x $\frac{5.8 \text{ lb}}{10^6 ft^3}$ x 12 mo/yr x .08 = 0.0106 lb/yr Formaldehyde

The annual emission levels for Benzene, Toluene, and Formaldehyde are below the reporting requirements. These substances will be reported as "otherwise present" on Form S-UP.

Device Name: PAINT SPRAY BOOTH

Device ID: 70014

Emission Calculations:

Emission calculations on coating emisison worksheet.

Toluene
AAE = 13.2 lb/yr

Emission levels is below the reportable limit; toluene will be shown as "otherwise present" on Form S-UP.

Device Name: DEGREASER

Device ID: 70015

Emission Calculations:

Emission calculation on solvent usage worksheet.

Methyl Chloroform

AAE = 14809.5 lb/yr

MHE = 2.63 lb/yr

Device Name: PARTS CLEANER

Device ID: 70016

Emission Calculations:

Emission calculation on solvent usage worksheet.

Methyl Chloroform

AAE = 17771.4 lb/yr

MHE = 3.2 lb/yr

Device Name: COOLING TOWERS (4)

Device ID: 70017

Emission Calculations:

4 working towers:

MHE = $(.02)(1500)(0.2)(1)(4)(8.33)(60)/10^6$ = 0.012 lbs/hr

AAE = $[(.02)(600)(0.2)(1)(4)(8.33)(60)/10^6]$ 8760 hrs/yr = 42 lbs/yr

Device Name: ENGINEERING LAB

Device ID: 70018

Emission Calculations:

The Engineering Lab uses small quantities of 111-TCA solvent in their daily operations. This solvent is drawn off of Device #70009. The Emissions of TCA for Device #70018 will be calculated with Device #70009.

Device Name: DEGREASER

Device ID: 70019

Emission Calculations:

This piece of equipment was not used in 1989.

Device Name: SPRAY BOOTH

Device ID: 70020

Emission Calculations:

There are two products used at this Spray Booth that contain Toluene. The total usage of the paints combined is only 2.5 gallons per year. Emission of Toluene at this Device and Device 70014 will be below the reporting requirements.

108883: AAE = Product usage x density x %S
= [1.25 gal x 7.59 lbs/gal x .60] + [1.25 gal x 7.95 lbs/gal x .30]
= 5.7 lbs + 3 lbs = 8.7 lb/yr

Device Name: DEGREASER

Device ID: 70021

Emission Calculations:

Emission calculation on solvent usage worksheet.

Methyl Chloroform

AAE = 397.7 lb/yr

MHE = 0.82 lb/hr

Fluorocarbons

AAE = 99.4 lb/yr

MHE = 0.21 lb/hr

Device Name: FLOW SOLDER AND SOLDER POTS

Device ID: 70022

Emission Calculations: Lead

EF = 0.2 lb/ton used 30% lead in solder

AAE = .30 x 0.2 lb/ton x 12 mo/yr x .75 lb/mo x 1/2000 = 0.00027 lb/yr

MHE = 0.00027 lb/yr

The annual emission of lead is below the reporting requirements. Lead will be reported as "otherwise present" on Form S-UP.

Device Name: CADMIUM PLATING (2)

Device ID: 70023

Emission Calculations:

EPA EF = .00005 grams/hr/amp

$$.00005 \text{ grams/hr/amp} \times \frac{.002204 \text{ lb}}{1 \text{ gram}} = 1.102 \times 10^{-7} \text{ lb/amp-hr}$$

$$\text{MHE} = 1.102 \times 10^{-7} \text{ lb/amp-hr} \times 600 \text{ amps} \times 2 \text{ tanks} = 0.00013 \text{ lb/hr}$$

$$\text{AAE} = 0.00013 \text{ lb/hr} \times 200 \text{ hr/mo} \times 12 \text{ mos/yr} = 0.31 \text{ lb/yr}$$

$$\text{EF} = \frac{0.31 \text{ lb/yr}}{2400 \text{ hr/yr}} = 0.00013 \text{ lb/hr}$$

The annual emission limit of cadmium is below the reporting requirements. Cadmium will be reported as "otherwise present" on Form S-UP.

APPENDIX B

SUPPORTING DOCUMENTATION

CHROME EMISSIONS FROM A SCRUBBER EXHAUST SERVING TWO HARD CHROME PLATING TANKS, ONE CHROMIC ACID ANODIZING TANK AND ONE CHROME STRIP TANK

ALLIED SIGNAL AEROSPACE CO.
Electrodynamics Division
11600 Sherman Way
North Hollywood, CA 91605

5/8/90
PES Job No. 4078

Pacific Environmental Services, Inc.
150 E. Foothill Blvd.
Arcadia, CA. 91006
(818) 357-1993

CHROME EMISSIONS FROM A SCRUBBER EXHAUST SERVING
TWO HARD CHROME PLATING TANKS,
ONE CHROMIC ACID ANODIZING TANK
AND ONE CHROME STRIP TANK

TABLE OF CONTENTS

SECTION		PAGE
1.	INTRODUCTION	1
2.	PROCESS DESCRIPTION	2
3.	TESTING METHODOLOGY	6
4.	RESULTS	9

APPENDIXES

SECTION 1

INTRODUCTION

Pacific Environmental Services, Inc. (PES) was contracted by Allied Signal Aerospace Company, to determine the stack outlet loading of a scrubber serving 2 hard chrome plating tanks, one chromic acid anodizing tank and one chrome strip tank, at 11,600 Sherman Way, North Hollywood, CA 91605.

The objective of the study was to determine if chromium emissions generated by plating and anodizing operations at the facility were sufficiently controlled to meet hexavalent chrome emission standards of South Coast Air Quality Management District (SCAQMD) Rule 1169.

PES conducted two 4 hour and one 6-hour source test on April 18, 19 & 20, 1990. Mr. Danilo Gutierrez, Manager, Health, Safety and Environmental Affairs, coordinated the plant operations during the study. The field tests were conducted by Mark J. Simon, Scott G. Parks, Glenn Hart, John Hagele, Eric Schumann and Dean High of PES. M. Dean High of PES provided guidance and supervision for planning and reporting purposes. Mr. Michael D. Wickson of SCAQMD observed portions of the tests as well as the entire sample retrieval process on the first test day. Tests were conducted at four points simultaneously - strip tank exhaust, chromic acid anodize tank exhaust, scrubber inlet and scrubber outlet. No major problems were encountered during the tests and the objective was achieved.

Section 2 of the report describes the facilities and the tested scrubber. Section 3 describes the testing procedures and analytical methods. Section 4 of the report provides a summary and discussion of the test results. Appendices contain the field data sheets, calculations, process data, lab reports calibration records for the dry gas meter.

EQUIPMENT DESCRIPTION

Two emission collection systems served various tanks at Allied-Signal. All chromic acid emissions (from two hard chrome plating tanks, one anodizing tank, and one strip tank) were collected by hoods and eventually combined in one 42" diameter scrubber intake duct which led out of the building. This duct led to a Viron International Model VVS-8496 vertical packed bed water scrubber followed by a 72" x 72" x 12" Munters chevron blade demister and a 46" diameter vertical outlet stack. Anodizing tanks A-11, A-12, and C-11 did not contain chromic acid solutions so they were not expected to contribute to the hexavalent chromium emissions. None of these three tanks were active during the tests. Figure 1 shows the overall layout of the emission control systems. Figure 2 shows the sampling ports for the exhausts of the strip tank and anodizing tank. Figure 3 shows the approximate location of the sampling ports in the scrubber intake and demister exhaust stack.

Both hard chrome plating tanks, the chromic acid anodizing tank and the chrome strip tank were operated during the tests. All tanks were used in the manufacture of small to medium sized aircraft parts. Because of the high cost and variable size of production parts, dummy loads were used for the tests. The chrome tanks and corresponding dummy loads were as follows:

TANK #	TANK SIZE (LxHxW)	LOAD DURING TESTS (LxWxT)
Hard Chrome Plating Tank C-7	144x36x48"	one 26 x 24 x 0.5" steel plate
Hard Chrome Plating Tank C-9	96x36x48	one 18 x 32.5 x 0.5 steel plate and one 24 x 36 x 0.0625" corrugated steel plate, and one 17.5 x 32.5 x 0.19 steel plate.
Anodizing Tank A-13	60x48x48	one 28 x 10 x 1.5 "aluminum block
Chrome Strip Tank C-11	48x36x48	one 25.5 x 12.0 x 0.5" steel plate

The chromic acid concentration of the hard chrome tanks was about 30 ounces/gallon and the operating temperatures were approximately 130 degrees Fahrenheit. The chromic acid concentration for the anodizing tank was approximately 40

grams/liter and the solution temperature was about 101 degrees Fahrenheit. Air agitation was not utilized in any tanks. One inch diameter polyballs were utilized on all the tanks. The current density applied to the dummy parts was similar to the typical applied current density used in production. The amperage and voltage used during the tests was read and recorded by PES personnel before, during, and after the tests. Average results are shown below:

Average Amperages Measured During Source Tests

Tank	Test #18	Test #19	Test#20
Plating tank C-7	3899	3344	0
Plating tank C-9	1413	981	0
Strip tank C-11	67	69	0
Anodizing tank A-13	18	17	0
Total	5397	4411	0

The first efficiency test was conducted while using maximum hard chrome plating amperages (3899 and 1413 amps). The strip tank amperage was 67 amps. Since the anodizing process was 40 minutes long, several different aluminum dummy loads were anodized during each 240 minute test. The anodizing voltage was 40 D.C. volts and the dummy loads required 17-18 amps each.

The second test was conducted while using the rectifiers' typical amp capacities in each of the hard chrome tanks (3344 and 981 amps) and the anodizing tank at 17 amps. The strip tank was read as 69 amps.

The third test was run with no electric load on any of the rectifiers or tanks. The tanks were maintained at their normal temperatures.

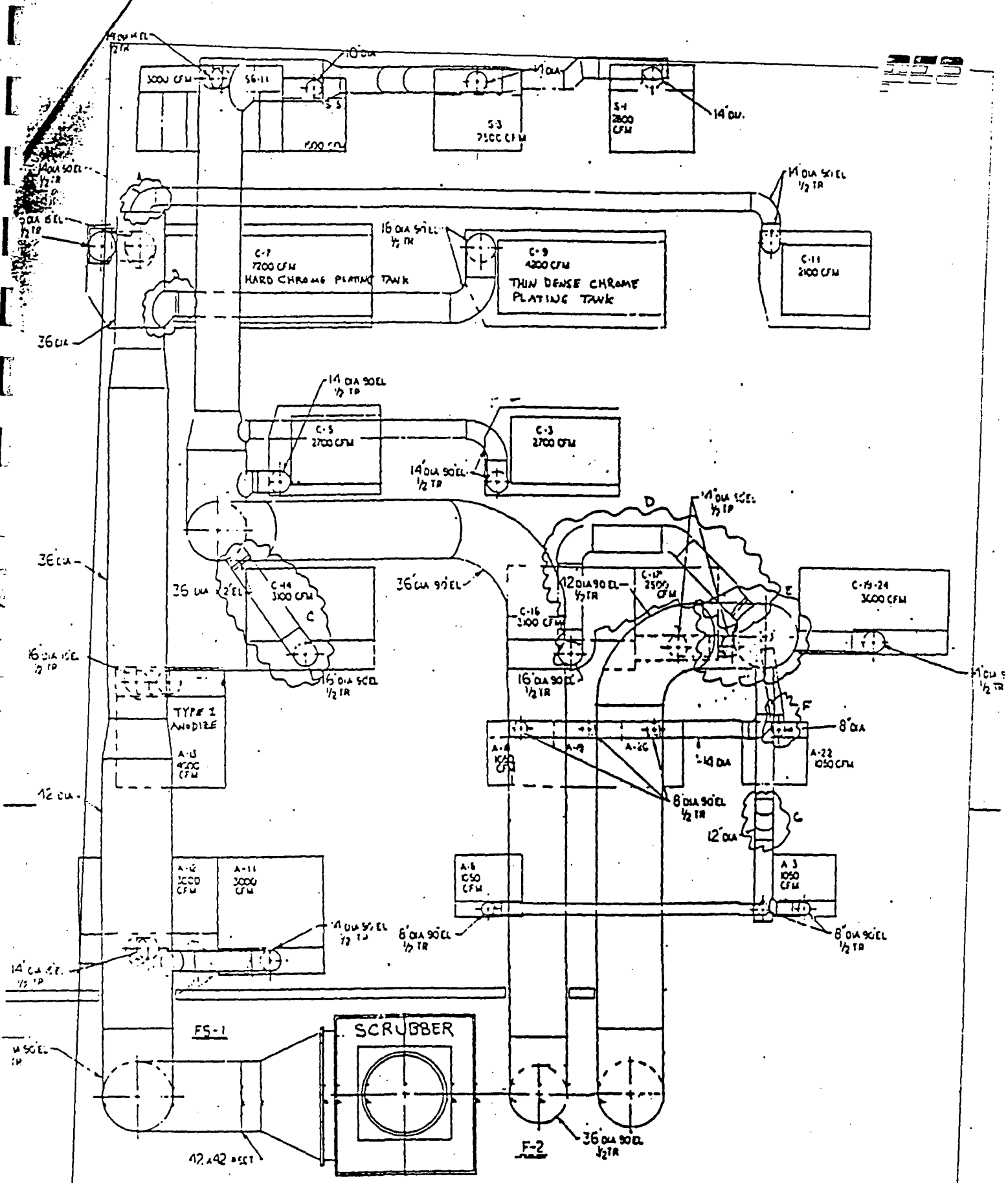

FIGURE 1

Top View Of Emission Control Systems
Allied-Signal Electrodynamics Division
North Hollywood, CA.

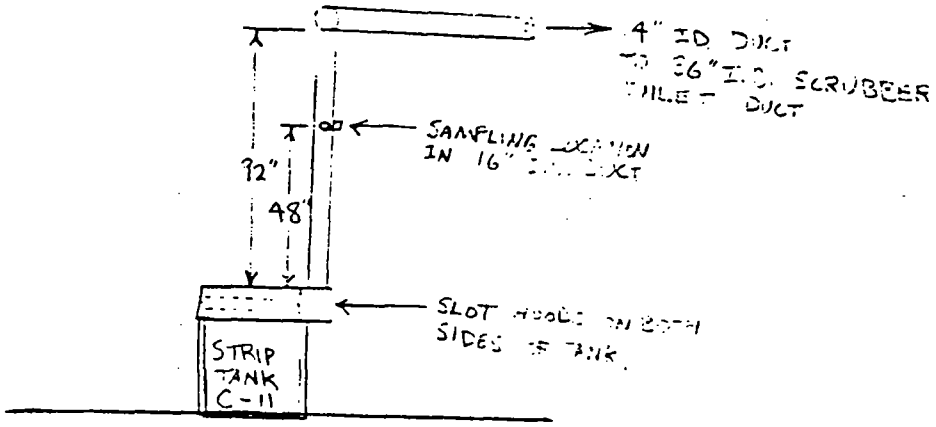

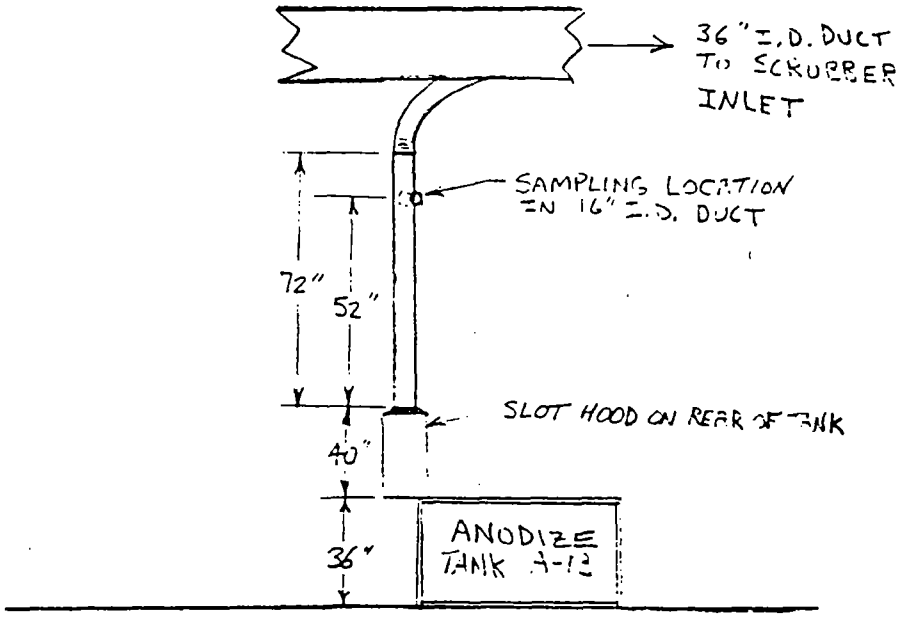

FIGURE 2

SAMPLING LOCATION FOR

TANKS A-13 and C-11

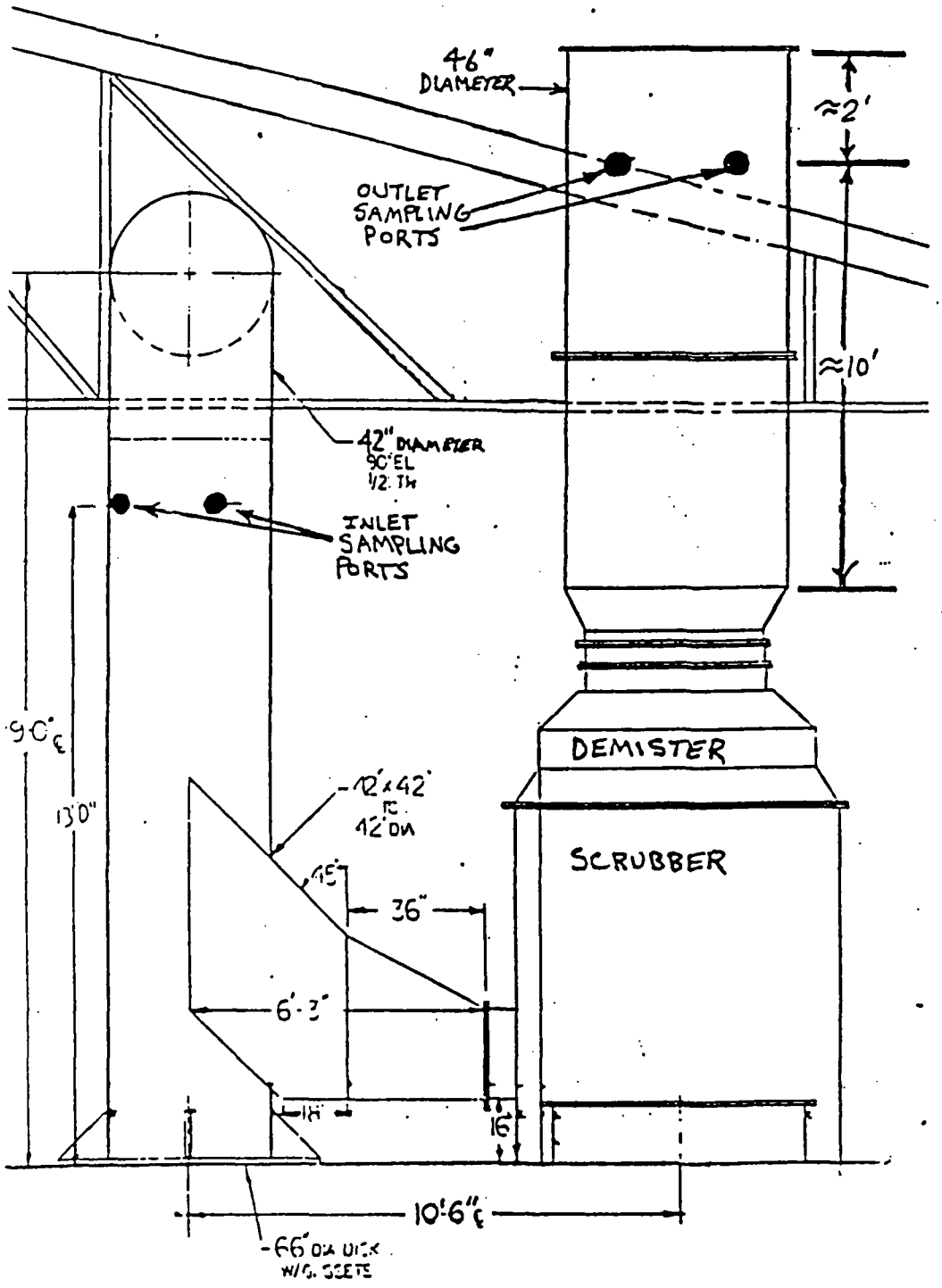

FIGURE 3

Side View Of Scrubber and Demister Showing Sampling Locations
Allied-Signal Electrodynamics Division
North Hollywood, CA.

TESTING METHODOLOGY

Before tests were initiated, smoke generating tubes were used to check the emission collection system's effectiveness.

The number of required traverse points and their locations were specified in CARB source testing Methods 1 and 2. The sampling ports were already installed and are shown in Figures 1, 2 and 3.

A total of three days of source tests were conducted. Four simultaneous source test samples were conducted daily (one on the strip tank exhaust, one on the anodizing tank exhaust, one on the scrubber inlet and one on the scrubber outlet). Hexavalent and total chromium were measured using SCAQMD Method 205.1. Figure 5 shows the Method 205.1 sampling train. The samples were extracted through a glass nozzle, a teflon union, a 24"-72" glass-lined stainless steel probe, a 10 foot teflon hose from the probe to the first impinger, two Greenburg-Smith impingers each with 100 ml. of 0.02N sodium bicarbonate solution, an empty impinger, a glass filter holder, an impinger filled with silica gel, a 30 foot umbilical line, a vacuum pump, a dry gas meter, and a calibrated orifice connected to an inclined manometer.

Teflon-coated glass fiber filters with 0.3, 0.1, and 0.035 micron pore layers were in the filter holders. CARB Method 3 was used to determine the moisture content of the stack gas during each source test; the volume of the impinger solution and the weight of the silica gel was recorded before and after the tests in order to obtain the moisture content of the stack gas stream. Leak checks were performed before and after each test. The length of the tests was four hours on the first two days and 6 hours on the third day. Sample size was approximately 100 to 300 cubic feet. Field data and process data were recorded during the tests on data sheets (Appendix). Source test calculations are also included in the appendix.

After the tests, the contents of the impingers was placed in a 1000 ml. polyethylene container. The sampling train was rinsed from the 3rd impinger to the nozzle with a 0.02 N $NaHCO_3$ solution and 0.1N HNO_3 and the rinse was added to the sample. Filters were placed in the same polyethylene bottles. The impinger solution was chilled to 68 degrees Fahrenheit or less during and after the tests and prior to the analyses in order to prevent deterioration of hexavalent to total chrome.

Laboratory analyses were conducted by Thermo Analytical Laboratory in Monrovia, California. Analyses for total chrome used atomic absorption spectrophotometry and analyses for

hexavalent chrome used diphenylcarbazide colorometric techniques. The detection level of the analytical procedure for hexavalent chrome, Cr 6, and total chrome, Cr T, were 0.003 and 0.001 mg/l respectively. Total chrome is easier to measure and detection levels can be reduced to lower levels than those possible for hexavalent chrome. Total chrome analyses serve as a back-up and quality control check for hexavalent chrome concentrations. A sample submittal/chain of custody sheet was completed when the samples were submitted (Appendix).

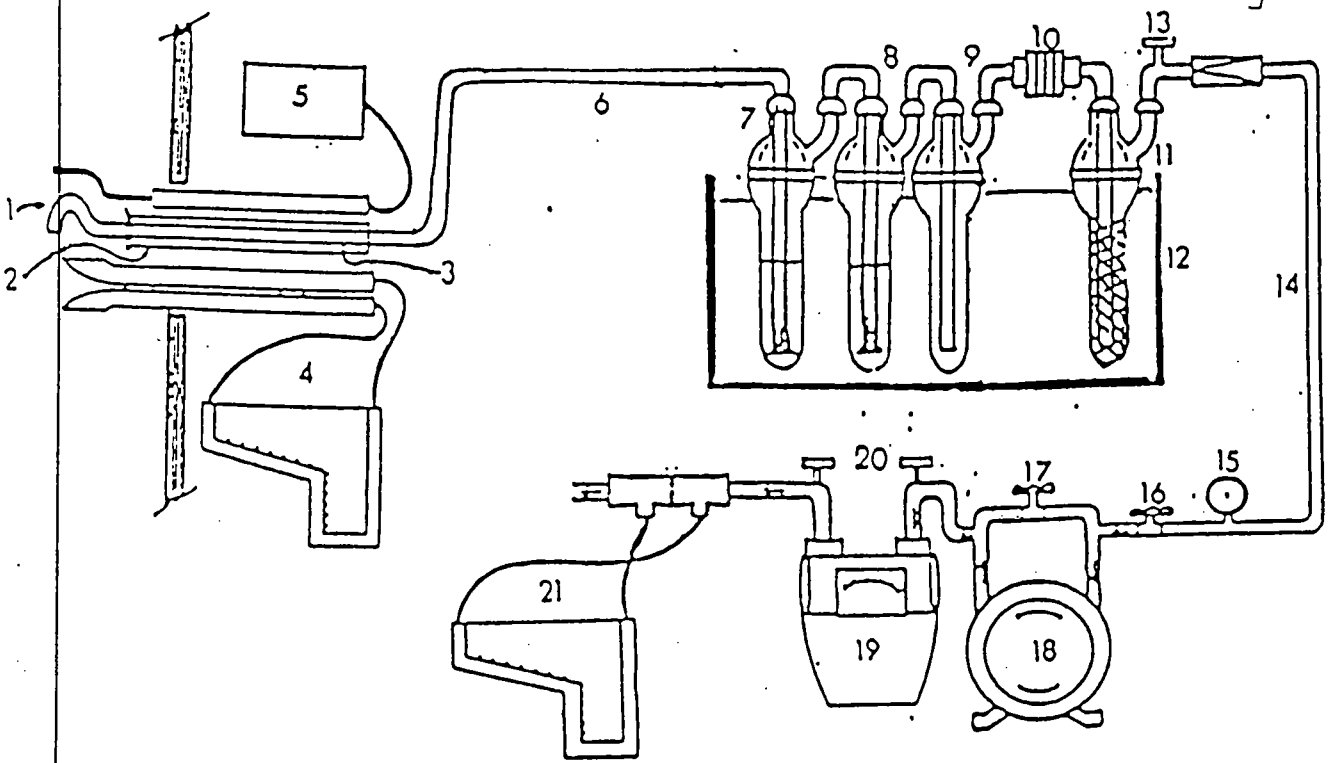

1. Glass sampling nozzle with teflon union
2. Stainless steel probe sheath
3. Glass-lined probe
4. Type S pitot tube and manometer for velocity determinations
5. Stack temperature sensor
6. 15 ft. teflon probe line with ball and socket connectors
7. Greenburg-Smith impinger with 100 ml. of 0.02 N $NaHCO_3$ solution
8. Greenburg-Smith impinger with 100 ml. of 0.02 N $NaHCO_3$ solution
9. Modified Greenburg-Smith impinger (dry)
10. Filter holder with teflon-coated glass fiber filter
11. Modified Greenburg-Smith impinger filled with 200 grams of silica gel
12. Impinger case filled with ice
13. Impinger exit gas temperature sensor
14. Umbilical line to meter box
15. Vacuum gauge
16. Coarse adjustment valve
17. Bypass valve to adjust sample volume
18. Leak free vacuum pump
19. Dry gas meter
20. Dry gas meter inlet and outlet temperature sensors
21. Orifice with manometer sample volume metering

FIGURE 3

Diagram Of Sampling Train

RESULTS OF TESTS

The strip tank showed no detectable levels of hexavalent chromium during any of the three four-to six-hour tests. Total chrome was just detectable but with only about 0.6 mg/hr emission rate during the first two tests (Tables 1 & 2). On the last six-hour test, no emissions were detectable from the strip tank whether measured as Cr6 or CrT (Table 3).

The chromic acid anodizing tank showed 0.464 mg/ah and 0.527 mg/ah of hexavalent chrome emissions. This tank, as well as all other tanks hooked to the same ventilation system, utilized 1" polyballs to reduce misting from the tank surface. Based on an uncontrolled emission rate of 5.2 mg/ah, the polyballs were reducing emissions off the anodizing tank solution by about 90%. The Cr6 emission rate was 8.4 and 9.0 mg/hr. When the tank was tested with no anodizing taking place, emissions of Cr6 measured 32 mg/hr; however agitation air was leaking into the tank and causing significant bubbling of the surface for almost one hour of this test before the air line was disconnected. Otherwise, results would possibly have been less, perhaps zero.

The inlet to the scrubber showed 0.254 mg/ah on the combined heavy load (5397A) and 0.200 mg/ah at average loads (4411A). The only load that changed was for hard chrome plating tanks C-7 and C-9. The strip tank and anodizing tank amperages were essentially constant on both days of testing at load. The third day of testing with no loads on any tank showed no detectable emissions of hexavalent chrome. However based on emissions measured from the anodizing tank while the agitation air was leaking, the inlet concentrations to the scrubber were probably about 24-33 mg/hr of total chrome. The hexavalent chrome could have been below detection because of the dilution effect of the clean exhaust flow air from the other three tanks.

The scrubber outlet exhaust showed 0.019 mg/ah of Cr6 at high load and 0.037 mg/ah of Cr6 at medium load for an average of 0.028 mg/ah. Using the average of the two tests, the facility could comply with the May 1, 1990 requirement of Rule 1169 for 0.03 mg/ah. Results were way below the 0.15 mg/ah standard required for those facilities with less than 3,600,000 ah/yr. The Allied Signal amp-hour meters showed an annualized usage of 3.25 million amp-hours per year so compliance with the 0.15 mg/ah standard would be required and was easily demonstrated.

During the third day of test with no plating, stripping, or anodizing taking place, Cr6 emissions going to the atmosphere were not detectable using a 6-hour sampling period (Table 3B). Total chrome (Cr3) was detected and estimated at 10.7 mg/hr

(Table 3A). However, this very low concentration measurement was only about twice the value of the train blank samples and should be regarded with some caution (Table 4).

Particulate matter discharged out of the scrubber was estimated from an analysis of total solids in the test samples compared to the train blanks. Results are highly questionable. Two days of samples on the scrubber showed 0.027 and 0.054 grains/scf while the third day showed the blank to contain more solids than the scrubber outlet sample. Total solids results are shown with the laboratory results (Appendix). Allied Signal's combination use of polyballs and the wet scrubber reduces the chromic acid mist, measured as Cr6 from about 5.2 mg/ah to 0.028 mg/ah which is a 99.5 percent reduction. It would therefore be expected that total solids in the chromic acid mist also would be reduced by 99.5 percent.

TABLE 1A: ALLIED SIGNAL TOTAL CHROMIUM EMISSIONS

AS18-1 Sample liquid from the impingers in the strip tank sample train on 4-18-90.
AS18-2 Sample liquid from the impingers in the anodizing tank sample train on 4-18-90.
AS18-3 Sample liquid from the impingers in the scrubber inlet sampling train on 4-18-90
AS18-4 Sample liquid from the impingers in the scrubber outlet sampling train on 4-18-90

SAMPLE RUN NUMBER	SAMPLE VOLUME (ml)	Conc. Cr T (mg/l)	Impinger Catch Cr T (mg)	SAMPLE METER VOL (dscf)	EMISSIONS Cr T (mg/dscf)	STACK FLOW RATE (dscfm)	ACTUAL EMISSIONS Cr T (mg/hour)	AVERAGE AMPERAGE (amps)	EMISSIONS Cr T (mg/amp-hour)
AS18-1	520	0.0010	0.0005	171.644	0.00000	2096	0.4	67	0.006
AS18-2	680	0.0100	0.0068	189.527	0.00004	4552	9.8	18	0.544
AS18-3	655	0.4880	0.3196	228.407	0.00140	18610	1563.2	5397	0.290
AS18-4	745	0.0330	0.0246	160.124	0.00015	20256	186.7	5397	0.035

EFFICIENCY = 87.9

TABLE 1B: ALLIED SIGNAL HEXAVALENT CHROMIUM EMISSIONS

AS18-1 Sample liquid from the impingers in the strip tank sample train on 4-18-90.
AS18-2 Sample liquid from the impingers in the anodizing tank sample train on 4-18-90.
AS18-3 Sample liquid from the impingers in the scrubber inlet sampling train on 4-18-90
AS18-4 Sample liquid from the impingers in the scrubber outlet sampling train on 4-18-90

SAMPLE RUN NUMBER	SAMPLE VOLUME (ml)	Conc. Cr +6 (mg/l)	Impinger Catch Cr +6 (mg)	SAMPLE METER VOL (dscf)	EMISSIONS Cr +6 (mg/dscf)	STACK FLOW RATE (dscfm)	ACTUAL EMISSIONS Cr +6 (mg/hour)	AVERAGE AMPERAGE (amps)	EMISSIONS Cr +6 (mg/amp-hour)
AS18-1	520	0.0000	0.0000	171.644	0.00000	2096	0.0	67	0.000
AS18-2	680	0.0085	0.0058	189.527	0.00003	4552	8.4	18	0.464
AS18-3	655	0.4285	0.2807	228.407	0.00123	18610	1372.2	5397	0.254
AS18-4	745	0.0185	0.0138	160.124	0.00009	20256	104.6	5397	0.019

EFFICIENCY = 92.5

PACIFIC ENVIRONMENTAL SERVICES, INC.

TABLE 2A: ALLIED SIGNAL TOTAL CHROMIUM EMISSIONS

AS19-1 Sample liquid from the impingers in the strip tank sample train on 4-19-90.
AS19-2 Sample liquid from the impingers in the anodizing tank sample train on 4-19-90.
AS19-3 Sample liquid from the impingers in the scrubber inlet sampl on 4-19-90
AS19-4 Sample liquid from the impingers in the scrubber outlet sampn on 4-19-90

SAMPLE RUN NUMBER	SAMPLE VOLUME (ml)	Conc. Cr T (mg/l)	Impinger Catch Cr T (mg)	SAMPLE METER VOL (dscf)	EMISSIONS Cr T (mg/dscf)	STACK FLOW RATE (dscfm)	ACTUAL EMISSIONS Cr T (mg/hour)	AVERAGE AMPERAGE (amps)	EMISSIONS Cr T (mg/amp-hour)
AS19-1	390	0.0020	0.0008	100.989	0.00001	1869	0.9	69	0.013
AS19-2	860	0.0040	0.0034	208.809	0.00002	4282	4.2	17	0.249
AS19-3	535	0.4080	0.2183	220.198	0.00099	17363	1032.7	4411	0.234
AS19-4	435	0.0650	0.0283	190.335	0.00015	20119	179.3	4411	0.041

EFFICIENCY = 82.5

PACIFIC ENVIRONMENTAL SERVICES, INC.

TABLE 2B: ALLIED SIGNAL HEXAVALENT CHROMIUM EMISSIONS

AS19-1 Sample liquid from the impingers in the strip tank sample train on 4-19-90.
AS19-2 Sample liquid from the impingers in the anodizing tank sample train on 4-19-90.
AS19-3 Sample liquid from the impingers in the scrubber inlet sampling train on 4-19-90
AS19-4 Sample liquid from the impingers in the scrubber outlet sampling train on 4-19-90

SAMPLE RUN NUMBER	SAMPLE VOLUME (ml)	Conc. Cr +6 (mg/l)	Impinger Catch Cr +6 (mg)	SAMPLE METER VOL (dscf)	EMISSIONS Cr +6 (mg/dscf)	STACK FLOW RATE (dscfm)	ACTUAL EMISSIONS Cr +6 (mg/hour)	AVERAGE AMPERAGE (amps)	EMISSIONS Cr +6 (mg/amp-hour)
AS19-1	390	0.0000	0.0000	100.989	0.00000	1869	0.0	69	0.000
AS19-2	860	0.0085	0.0073	208.809	0.00003	4282	9.0	17	0.527
AS19-3	535	0.3485	0.1864	220.198	0.00085	17363	882.1	4411	0.200
AS19-4	435	0.0585	0.0254	190.335	0.00013	20119	161.4	4411	0.037

EFFICIENCY = 81.5

TABLE 3A: ALLIED SIGNAL TOTAL CHROMIUM EMISSIONS

AS20-1 Sample liquid from the impingers in the strip tank sample train on 4-20-90.
AS20-2 Sample liquid from the impingers in the anodizing tank sample train on 4-20-90.
AS20-3 Sample liquid from the impingers in the scrubber inlet sampling train on 4-20-90
AS20-4 Sample liquid from the impingers in the scrubber outlet sampling train on 4-20-90

SAMPLE RUN NUMBER	SAMPLE VOLUME (ml)	Conc. Cr T (mg/l)	Impinger Catch Cr T (mg)	SAMPLE METER VOL (dscf)	EMISSIONS Cr T (mg/dscf)	STACK FLOW RATE (dscfm)	ACTUAL EMISSIONS Cr T (mg/hour)
AS20-1	730	0.0000	0.0000	136.354	0.00000	1924	0.0
AS20-2	695	0.0500	0.0348	304.283	0.00011	4812	33.0 *
AS20-3	740	0.0100	0.0074	305.568	0.00002	16632	24.2
AS20-4	820	0.0030	0.0025	283.586	0.00001	20570	10.7

* Agitation air was leaking into the tank and causing significant bubbling at the tank surface for about one hour during this test; the measured emission rate is therefore higher than normally expected and the air may account for all the emissions

TABLE 3B: ALLIED SIGNAL HEXAVALENT CHROMIUM EMISSIONS

AS20-1 Sample liquid from the impingers in the strip tank sample train on 4-20-90.
AS20-2 Sample liquid from the impingers in the anodizing tank sample train on 4-20-90.
AS20-3 Sample liquid from the impingers in the scrubber inlet sampling train on 4-20-90
AS20-4 Sample liquid from the impingers in the scrubber outlet sampling train on 4-20-90

SAMPLE RUN NUMBER	SAMPLE VOLUME (ml)	Conc. Cr +6 (mg/l)	Impinger Catch Cr +6 (mg)	SAMPLE METER VOL (dscf)	EMISSIONS Cr +6 (mg/dscf)	STACK FLOW RATE (dscfm)	ACTUAL EMISSIONS Cr +6 (mg/hour)
AS20-1	730	0.0000	0.0000	136.354	0.00000	1924	0.0
AS20-2	695	0.0485	0.0337	304.283	0.00011	4812	32.0 *
AS20-3	740	0.0000	0.0000	305.568	0.00000	16632	0.0
AS20-4	820	0.0000	0.0000	283.586	0.00000	20570	0.0

* Agitation air was leaking into the tank and causing significant bubbling at the surface for about one hour during this test; the measured emission rate is therefore higher than normally expected and the air may account for all of the emissions.

TABLE 4

FIELD TRAIN BLANK RESULTS

Sample	Cr *	Cr
AS18-5	<0.003	0.002
AS19-5	<0.003	0.001
AS20-5	<0.003	0.003
Average	<0.003	0.002

* Values below detection were considered to be 0.0015 for purposes of correcting field samples.

APPENDIXES NOT INCLUDED

PERMIT # P43029

DEGREASER

	DATE	ADDITION (QTY)	FOR RECYCLE (QTY)	ADDED TO 921-1	ADDED TO 9130
0913	10-18-89	19.25			
0913	10-22-89	29.05			
RS	10-24-89				2 GAL.
	10-29-89	68.72			
0913	10-30-89		55 gal		
RS	10-31-89				2 GAL.
RS	11-6-89				2 GAL
	11-6-89	58.23			
	11-7-89				1.5 GAL
	11-13-89				1.5 GAL
	11-18-89				1 GAL.
0913	11-18-89			~~7~~	10 gal
	11-18-89	33.05			

PERMIT # P43029

DEGREASER

	DATE	ADDITION (QTY)	FOR RECYCLE (QTY)	ADDED TO 921-1	ADDED TO 9130
JH	11-20-89			~~2 gal~~	3 gal
0913	11-20-89	66.77			
BS	11-27-89				1.5 GAL
0913	11-28-89	23.37			
9184	11-29-89	22.78			
0913	12-2-89		165 gal		
0913	12-2-89	165.02			
0913	12-5-89			55 gal	
0913	12-5-89	55.07			
BS	12-7-89				1.5 GAL
0913	12-11-89	47.05			
	12-15-89	26.19			~~26.19~~
	12-19-89	4.5			2.0

544.1

PERMIT # P43029

DEGREASER

DATE	ADDITION (QTY)	FOR RECYCLE (QTY)	ADDED TO 921-1	ADDED TO 9130
12/20	4.5 gal			
12/21	4.5 gal			
12/22	4.5			
12/25	4.5			
12/26	4.5			
12/27	4.5			
12/28	4.5			
12/29	4.5			
12/30	4.5			
12/31/89	4.5			
1/2/90	4.5			
1/3/90	4.5			
1/4/90	4.5			

PERMIT # P43029

DEGREASER

DATE	ADDITION (QTY)	FOR RECYCLE (QTY)	ADDED TO 921-1	ADDED TO 9130
1/5/90	4.5			
1/6/90	4.5			
1/7/90	4.5			
1/8/90	4.5			
1-9-90				1 GAL.
1-10-90				1 GAL.
1-10-90	4.5			1.0 gal
1-11-90	4.5			1.0 gal
1-12-90	4.5			1.0 gal
1-13-90	4.5			1.0 gal
1-14-90	4.5			1.0 gal
1-15-90	4.5			1.0 gal
1-15-90			4.5	gal

PERMIT # P43029

DEGREASER

DATE	ADDITION (QTY)	FOR RECYCLE (QTY)	ADDED TO 921-1	ADDED TO 9130
1-16-90				1 GAL.
1-16-90			4.5 gal	
1-16-90	4.5 gal			
1-17-90				1 GAL.
1-17-90	4.5 gal			
1-17-90			4.5 gal	
1-18-90	4.5 gal			1 gal
1-19-90	4.5 gal			
1-19-90				1 gal
1-20-90	4.5 gal			
1-20-90				1 gal
1-21-90	4.5 gal			
1-21-90				1 gal

PERMIT # P43029

DEGREASER

DATE	ADDITION (QTY)	FOR RECYCLE (QTY)	ADDED TO 921-1	ADDED TO 9130
1-21-90	4.5 gal			
1-22-90	4.5 gal			
1-23-90	4.5 gal			
1-23-90			4.5 gal	
1-24-90	4.5 gal			
1-24-90				1 gal
1-24-90			4.5 gal	
1-25-90	4.5 gal			
1-25-90			4.5 gal	
1-25-90				1 GAL.
1-26-90	4.5 gal			
1-28-90				1 GAL.
1-28-90	4.5 gal			

PERMIT # P43029

DEGREASER

	DATE	ADDITION (QTY)	FOR RECYCLE (QTY)	ADDED TO 921-1	ADDED TO 9130
	1-28-90			4.5 gal	
	1-29-90				1 gal
	1-29-90			4.5 gal	
	1-29-90	4.5 gal			
0913	1-30-90	4.5 gal			
	1-30-90			4.5 gal	
	1-31-90				1 GAL
	1-31-90	4.5 gal			
	1-31-90			4.5 gal	
	2-1-90	4.5 gal			
	2-1-90			4.5 gal	
	2-1-90				1 gal
	2-2-90	4.5 gal			

PERMIT # P43029

DEGREASER

DATE	ADDITION (QTY)	FOR RECYCLE (QTY)	ADDED TO 921-1	ADDED TO 9130
2-2-90			4.5 gal	
2-2-90				1 gal
2-3-90	4.5 gal			
2-3-90			4.5 gal	
2-3-90				1 gal
2-4-90	4.5 gal			
2-4-90			4.5 gal	
2-4-90				1 gal
2-5-90	4.5 gal			
2-5-90			4.5 gal	
2-5-90				1 gal
2-6-90	4.5 gal			
2-6-90			4.5 gal	

PERMIT # P43029

DEGREASER

DATE	ADDITION (QTY)	FOR RECYCLE (QTY)	ADDED TO 921-1	ADDED TO 9130
2-6-90				1 gal
2-7-90			4.5 gal	
2-7-90	4.5 gal			
2-7-90				1 gal
2-8-90	4.5 gal			
2-8-90			4.5 gal	
2-8-90				1 gal
2.9.90	4.5 gal			
2.9-90			4.5 gal	
2.9.90				1 gal
2-10-90	4.5 gal			
2-10-90	~~4.5~~		4.5 gal	
2-10-90				1 gal

PERMIT # P43029

DEGREASER

DATE	ADDITION (QTY)	FOR RECYCLE (QTY)	ADDED TO 921-1	ADDED TO 9130
2-11-90	4.5 gal			
2-11-90			4.5 gal	
2-11-90				1 gal
2-12-90	4.5 gal			
2-12-90			4.5 gal	
2-12-90				1 gal
2-13-90	4.5 gal			
2-13-90			4.5 gal	
2-13-90				1
2-14-90	4.5 gal			
2-14-90			4.5 gal	~~4.5~~ 1 gal
2-14-90				
2-15-90	4.5 gal			

PERMIT # P43029

DEGREASER

DATE	ADDITION (QTY)	FOR RECYCLE (QTY)	ADDED TO 921-1	ADDED TO 9130
2-15-90			4.5 gal	
2-15-90				1 gal
2-16-90	4.5			
2-16-90			4.5	
2-16-90				1
2-17-90	4.5			
2-17-90			4.5	
2-17-90				1
2-18-90	4.5			
2-18-90			4.5	
2-18-90				1
2-19-90	4.5			
2-19-90			4.5	

PERMIT # P43029

DEGREASER

DATE	ADDITION (QTY)	FOR RECYCLE (QTY)	ADDED TO 921-1	ADDED TO 9130
2-19-90				1
2-20-90	4.5			
2-20-90			4.5	
2-20-90				1
2-21-90	4.5			
2-21-90			4.5	
2-21-90				1
2-22-90	4.5			
2-22-90			4.5	
2-22-90				1
2-23-90	4.5			
2-23-90			4.5	
2-23-90				1

PERMIT # P43029

DEGREASER

DATE	ADDITION (QTY)	FOR RECYCLE (QTY)	ADDED TO 921-1	ADDED TO 9130
2-24-90	4.5			
2-24-90			4.5	
2-24-90				1
2-25-90	4.5			
2-25-90			4.5	
2-25-90				1
2-26-90	4.5			
2-26-90			4.5	
2-26-90				1
2-27-90	4.5			
2-27-90			4.5	
2-27-90				1
2-28-90	4.5			

PERMIT # P43029

DEGREASER

DATE	ADDITION (QTY)	FOR RECYCLE (QTY)	ADDED TO 921-1	ADDED TO 9130
2-28-90			4.5	
2-28-90				1
3-1-90	4.5			
3-1-90			4.5	
3-1-90				1
3-2-90	4.5			
3-2-90			4.5	
3-2-90				1
3-3-90	4.5			
3-3-90			4.5	
3-3-90				1
3-4-90	4.5			
3-4-90			4.5	

PERMIT # P43029

DEGREASER

DATE	ADDITION (QTY)	FOR RECYCLE (QTY)	ADDED TO 921-1	ADDED TO 9130
3-4-90			1	1
3-5-90	4.5			
3-5-90			4.5	
3-5-90				1
3-6-90	4.5			
3-6-90			4.5	
3-6-90				1
3-7-90	4.5			
3-7-90			4.5	
3-7-90				1
3-8-90	4.5			
3-8-90			4.5	
3-8-90				1

PERMIT # P43029

DEGREASER

DATE	ADDITION (QTY)	FOR RECYCLE (QTY)	ADDED TO 921-1	ADDED TO 9130
3-9-90	4.5			
3-9-90			4.5	
3-9-90				1
3-10-90	4.5			
3-10-90			4.5	
3-11-90	4.5			
3-11-90			4.5	
3-12-90	4.5			
3-12-90			4.5	
3-13-90	4.5			
3-13-90			4.5	
3-14-90				1
3-14-90	4.5			

PERMIT # P43029

DEGREASER

DATE	ADDITION (QTY)	FOR RECYCLE (QTY)	ADDED TO 921-1	ADDED TO 9130
3-14-90			4.5	
3-15-90	4.5			
3-15-90			4.5	
3-15-90				1
3-16-90	4.5			
3-16-90			4.5	
3-16-90				1
3-17-90	4.5			
3-17-90			4.5	
3-17-90				1

PERMIT # M51995

DEGREASER

	DATE	ADDITION (QTY)	FOR RECYCLE (QTY)
OHB	12-5-89	40 gal	
#8585	1-12-90	4.5 gal	
#8585	1-13-90	4.5 gal	
#8585	1-14-90	4.5 gal	
#8585	1-15-90	4.5 gal	
8373	1-16-90	4.5 GAL.	
8373	1-17-90	4.5 GAL.	
8373	1-18-90	4.5 GAL.	
8373	1-23-90	4.5 GAL.	
8373	1-24-90	4.5 GAL.	
8373	1-25-90	4.5 GAL.	
8373	1-26-90	4.5 GAL.	
8373	1-29-90	4.5 GAL.	

PERMIT # M51995

DEGREASER

DATE	ADDITION (QTY)	FOR RECYCLE (QTY)
2-27-90	4.5 gal	
2-28-90	4.5 gal	
3-1-90	4.5 gal	
3-2-90	4.5 gal	
3-3-90	4.5 gal	
3-4-90	4.5 gal	
3-5-90	4.5 gal	
3-6-90	4.5 gal	
3-7-90	4.5 gal	
3-8-90	4.5 gal	
3-9-90	4.5 gal	
3-10-90	4.5 gal	
3-11-90	4.5 gal	

PERMIT # M51995

DEGREASER

DATE	ADDITION (QTY)	FOR RECYCLE (QTY)
3-12-90	4.5 gal	
3-13-90	4.5 gal	
3-14-90	4.5	
3-15-90	4.5	
3-16-90	4.5	
3-17-90	4.5	

PERMIT # M60608

DEGREASER

DATE	ADDITION (QTY)	FOR RECYCLE (QTY)
10/13/89	10 GAL.	9 GAL.
10/17/89	10 GAL.	10 GAL.
10/18/89	10 GAL	10 GAL
10/19/89	~~6 g~~	6 g
10/19/89		12 g
10/25/89		12 g
10/25/89		12 g
10-26-89	16 oz	
11-3-89	10 GAL	9 GAL
11-16-89	10-GAL	10 GAL
11/30/89	2 GAL	
12-20-89	10 GAL	10 GAL
1-3-90	5 GAL	

PERMIT # PA60720

DEGREASER

	DATE	ADDITION (QTY)	FOR RECYCLE (QTY)
	10-24-89	2 GAL.	
	10-31-89	2 GAL.	
	11-6-89	2 GAL.	
	11-7-89	1.5 GAL.	
	11-13-89	1.5 GAL.	
	11-18-89	1 GAL	
6913	11-18-89		15gal
6913	11-18-89	10gal	
	11-20-89	3 GAL	
	11-27-89	1.5 GAL.	
	12-6-89	1.5 GAL	
	12-19-89	2 GAL	
	1-9-90	1 GAL	

PERMIT # M60720

DEGREASER

DATE	ADDITION (QTY)	FOR RECYCLE (QTY)
3-10	1 gal	
3-11	1 gal	
3-12	1 gal	
3-13	1 gal	
3-14	1 gal	
3-15	1 gal	
3-16	1 gal	
3-17	1 gal	

2

COATING USAGE CHART

COMPANY NAME: Allied Signal PERMIT NO. P36679

ADDRESS PREMISES: 11600 Sherman Way

TELEPHONE NO.: (818) 503-3727

FROM 10/18/89 THRU 12/30, 1989

DATE	COATING (a) NAME #, COLOR	COATING (a) VOC (g/l or lb/gal)	COATING (a) AMT. USED (gal)	SOLVENT ADDED NAME	SOLVENT ADDED VOC (g/l or lb/gal)	SOLVENT ADDED AMT. USED (gal)	CLEAN-UP SOLVENT (b) NAME	CLEAN-UP SOLVENT (b) VOC (g/l or lb/gal)	CLEAN-UP SOLVENT (b) AMT. USED (gal)	SURFACE MATERIAL COATED
10/18	Mil-C-83286 white	617 G/L	8oz				M.E.K.	802 G/L	1 GAL	METAL
10/22	Mil-P-23377C yellow	630 G/L	1oz							
10/18	Mil-C-83286 white	617 G/L	7oz							
10/24	Mil-L-81352 white	617 G/L	8oz	LACQUER Thinner PT 1002	843 G/L	8oz				
10/30	Mil-P-23377C yellow	630 G/L	6oz							
10/30	Mil-C-83286 white	617 G/L	1PT							
11/4	BMS-1011 GREEN	327 G/L	2oz	SOLVENT REDUCER 010X319		6oz		802 G/L	1 GAL	
[illegible]	Mil-L-81352 white	617 G/L	8oz							
12/10	BMS-1011 GREEN	327 G/L	16oz	SOLVENT REDUCER 010X319		12oz				
12/19	Mil-L-81352 white	617 G/L	6oz							
12/20	BMS-1011 GREEN	327 G/L	4oz			8oz				
12/30	MIL-L-19538 GREEN	660 G/L	2PT	LACQUER THINNER PT 1002	G/L 843	1PT		802 G/L	1 GAL	
12/30	Mil-P-23377C yellow	630 G/L	8oz	PT 1002	G/L 843	8oz				

m

COATING USAGE CHART

COMPANY NAME: ALLIED SIGNAL PERMIT NO. P36679

ADDRESS PREMISES: 11600 Sherman Way

TELEPHONE NO.: (818) 765-1010

FROM 1/2/~~89~~ 90 THRU 1-31-90, 1990

DATE	COATING (a) NAME #, COLOR	COATING (a) VOC (g/l or lb/gal)	COATING (a) AMT. USED (gal)	SOLVENT ADDED NAME	SOLVENT ADDED VOC (g/l or lb/gal)	SOLVENT ADDED AMT. USED (gal)	CLEAN-UP SOLVENT (b) NAME	CLEAN-UP SOLVENT (b) VOC (g/l or lb/bal)	CLEAN-UP SOLVENT (b) AMT. USED (gal)	SURFACE MATERIAL COATED
1/26	BMS 10-11 GREEN	327 GL	16 OZ	SOLVENT REDUCER 010X319		12 OZ	MEK	802 G/L		METAL
1/10	Booth COATING 0049596	S.595 LBS/GAL	5 QT.							
1/27	MIL-P-23377 YELLOW	630 G/L	8 OZ							
1/15	MIL-S-83430A COATING	15 G/L	52 OZ	TOLUENE	866 G/L	12 OZ			1 GAL	
1/28	SUPE KOROPON PRIMER	650 G/L	12 OZ							
1/28	443-3-320 EPOXY RED	MIXED 596 G/L	2 OZ							
1/30	PT-113 GREEN	467 G/L	2 QT	PT 100 Z	G/L 843	1 QT		802 G/L		
1/18	TT-P-1757 YELLOW	345 G/L	6 OZ	TOLUENE	866 G/L	2 OZ			1 GAL	
1/31	MIL-C-83286 WHITE	617 G/L	16 OZ							

(a) If a catalyst is added, enter name, VOC, and amount used under "Coating"

PREPARED BY: NAME Luis Reyna

COATING USAGE CHART

COMPANY NAME: ALLIED SIGNAL PERMIT NO. P366769

ADDRESS PREMISES 11600 SHERMAN WAY

TELEPHONE NO. (818) 765-1010

FROM 2-13 THRU 2-28, 1990

DATE	COATING (a) NAME #, COLOR	VOC (g/l or lb/gal)	AMT. USED (gal)	SOLVENT ADDED NAME	VOC (g/l or lb/gal)	AMT. USED (gal)	CLEAN-UP SOLVENT (b) NAME	VOC (g/l or lb/bal)	AMT. USED (gal)	SURFACE MATERIAL COATED
										METAL
2/13	BMS-1011 GREEN	327 G/L	12oz	SOLVENT REDUCER 010X319		5oz				
2/14	BMS-1011 GREEN	327 G/L	4oz	"		10oz				
2/20	BMS-1011 GREEN	327 G/L	8oz	"		4oz				
2/22	BMS-1011 GREEN	327 G/L	8oz	"		4oz				
2/24	MIL-P-23377E YELLOW	630 G/L	16oz							
2/24	MIL-L-19538 GREEN	660 G/L	12oz	LACQUER THINNER PT 100Z	843 G/L	6oz	M.E.K.	802 G/L	1GAL	
2/25	MIL-C-22750D WHITE		10oz							
2/26	MIL-L-19538 GREEN	660 G/L	16oz	LACQUER THINNER PT 100Z	843 G/L	8oz				
2/26	MIL-P-23377E YELLOW	630 G/L	16oz							
2/28	SUPER KOKOPON PRIMER-GREEN	650 G/L	8oz							
2/28							HEPTANE	697 G/L	2GAL	

(a) If a catalyst is added, enter name, VOC, and amount used

COATING USAGE CHART

COMPANY NAME: ALLIED SIGNAL PERMIT NO. P366769

ADDRESS PREMISES: 11600 SHERMAN WAY

TELEPHONE NO.: (818) 503-3727

FROM 3-1 THRU 3-30, 1990

DATE	COATING (a) NAME #, COLOR	COATING (a) VOC (g/l or lb/gal)	COATING (a) AMT. USED (gal)	SOLVENT ADDED NAME	SOLVENT ADDED VOC (g/l or lb/gal)	SOLVENT ADDED AMT. USED (gal)	CLEAN-UP SOLVENT (b) NAME	CLEAN-UP SOLVENT (b) VOC (g/l or lb/bal)	CLEAN-UP SOLVENT (b) AMT. USED (gal)	SURFACE MATERIAL COATED
3/7	BMS-1011 GREEN	327 G/L	2 oz	SOLVENT 010X319 REDUCER		6 oz				METAL
3/8	BMS-1011 GREEN	327 G/L	10 oz	"		11 oz				
3/12	Mil-P-23377E YELLOW	630 G/L	10 oz				M.E.K.		1 gal	
3/12	Mil-C-83286 WHITE	617 G/L	10 oz							
3/15	Mil-P-23377E YELLOW	630 G/L	10 oz							
3/15	Mil-C-83286 WHITE	617 G/L	10 oz							
3/19	LCM-37-1035A PRIMER	683 G/L	7 oz					802 G/L	1 gal	
3/19	C37-1348 WHITE	683 G/L	7 oz				M.E.K.			
3/28/90	BMS-1011 GREEN	327 G/L	10 oz	SOLVENT 010X319 REDUCER		4 oz				
3/30	Mil-P-23377E YELLOW	630 G/L	1 qt							
3/30	Mil-L-19538 GREEN	660 G/L	1 qt	PT 10 oz	843 G/L	1 qt				
3/30							HEPTANE	697 G/L	5 gal	

(a) If a catalyst is added, enter name, VOC, and amount used

COATING USAGE CHART

COMPANY NAME: ALLIED SIGNAL PERMIT NO. P366769

ADDRESS PREMISES 11600 SHERMAN WAY

TELEPHONE NO.: ( )

FROM 4-1 THRU 4-18, 1990

DATE	COATING (a)			SOLVENT ADDED			CLEAN-UP SOLVENT (b)			SURFACE MATERIAL COATED
	NAME #, COLOR	VOC (g/l or lb/gal)	AMT. USED (gal)	NAME	VOC (g/l or lb/gal)	AMT. USED (gal)	NAME	VOC (g/l or lb/bal)	AMT. USED (gal)	
4/2	BMS-1011 GREEN	327 G/L	4 OZ	SOLVENT 010 x 319 REDUCER		11 OZ				

(a) If a catalyst is added, enter name, VOC, and amount used

CERTIFIED

P 665 441 211

MAIL

RECEIVED

JUL 24 1991

PRC ENVIRONMENTAL MANAGEMENT, INC.

JUN 28 '91

Allied-Signal Aerospace Company

Allied Signal

Electrodynamics Division
11600 Sherman Way
North Hollywood, CA 91605-5887

CHRIS STUBBS
SOUTH COAST GROUNDWATER SECTION (H-6-4)
UNITED STATES ENVIRONMENTAL PROTECTION AGEN
PO BOX 193062
SAN FRANCISCO, CA 94119-3036

Return Postage Guaranteed

EDD-1000

JUL - 2 1991

1st NOTICE 7-19-91
FINAL
RETURN 7-24-91